93% AND 95% 2-STAGE VARIABLE-SPEED GAS FURNACE INSTALLATION INSTRUCTIONS

ATTENTION INSTALLATION PERSONNEL

As a professional installer, you have an obligation to know the product better than the customer. This includes all safety precautions and related items. Prior to actual installation, thoroughly familiarize yourself with this instruction manual. Pay special attention to all safety warnings. Often during installation or repair, it is possible to place yourself in a position which is more hazardous than when the unit is in operations.

Remember, it is your responsibility to install the product safely and to know it well enough to be able to instruct a customer in its safe use. Safety is a matter of common sense...a matter of thinking before acting. Most dealers have a list of specific good safety practices...follow them.

The precautions listed in this installation manual are intended as supplemental to existing practices. However, if there is a direct conflict between existing practices and the content of this manual, the precautions listed here take precedence.

These furnaces comply with requirements embodied in the American National Standard/National Standard of Canada ANSI Z21.47-CSA-2.3 Gas Fired Central Furnaces.

Whirlpool Gold® Models
WGFD295,WGFM295
WPIO-368C

Tradewinds Distributing Company, LLC
14610 Breakers Drive
Jacksonville, Florida 32258

TABLE OF CONTENTS

GAS FURNACE SAFETY PRECAUTIONS 3
PRODUCT DESCRIPTION AND APPLICATION 4
Shipping Inspection 4
Electrostatic Discharge (ESD) 4
To The Installer 4
Important Note to the Owner Regarding Product Warranty 4
Product Application 5
LOCATION REQUIREMENTS AND CONSIDERATIONS 5
Clearances and Accessibility 6
Furnace Suspension 7
Existing Furnace Removal 7
Thermostat Location 7
Combustion and Ventilation Air Requirements 8
HORIZONTAL APPLICATIONS AND CONSIDERATIONS 8
Drain Trap and Lines 8
Leveling 8
Alternate Vent/Flue Connections 8
Alternate Electrical and Gas Line Connections 9
Drain Pan 9
Freeze Protection 9
Furnace Suspension 9
PROPANE GAS/HIGH ALTITUDE INSTALLATIONS 9
VENT/FLUE PIPE AND COMBUSTION AIR PIPE 10
Dual Certification: Nondirect/Direct Vent 10
Materials and Joining Methods 10
Proper Vent/Flue and Combustion Air Piping Practices 10
Termination Locations 11
Canadian Venting Requirements 11
Standard Furnace Connections 11
Vent/Flue Pipe 12
Combustion Air Pipe—Direct Vent Installations 12
Combustion Air Pipe—Nondirect Vent Installations 12
Alternate Furnace Connections 12
Alternate Vent/Flue Location 13
Alternate Combustion Air Intake Location 14
Nondirect Vent (Single Pipe) Piping 14
Nondirect Vent Applications 15
Vent/Flue Pipe Terminations 15
Direct Vent (Dual Pipe) Piping 16
Vent/Flue and Combustion Air Pipe Lengths and Diameters 16
Vent/Intake Terminations for Installation of Multiple Direct Vent Furnaces 19
Concentric Vent Termination 19
Side Wall Vent Kit 19
CONDENSATE DRAIN LINES AND DRAIN TRAP 19
Standard Right or Left Side Drain Hose Connections 20
Upright Installations—Trap on Right Side 20
Upright Installations—Trap on Left Side 21
Upright Drain Trap Mounting—Left or Right Side Panel 21
Horizontal Installations—Right Side Down 21
Horizontal Installations—Left Side Down 22
Horizontal Drain Trap Mounting—Left or Right Side Panel 23
ELECTRICAL CONNECTIONS 23
Wiring Harness 23
115-Volt Line Connections 23
Junction Box Relocation 23
24-Volt Thermostat Wiring 24
24-Volt Dehumidistat Wiring 25
Fossil Fuel Applications 25
115-Volt Line Connection of Accessories (Humidifier and Electronic Air Cleaner) 25
GAS SUPPLY AND PIPING 26
High Altitude Derate 26
Propane Gas Conversion 26
Gas Control Valve 27
Gas Piping Connections 27
Gas Piping Checks 29
Propane Gas Tanks and Piping 29
CIRCULATING AIR AND FILTERS 31
Ductwork—Airflow 31
Bottom Return Air Opening—Upflow Models 31
Filters—Read This Section Before Installing the Return Air Ductwork 31
START-UP PROCEDURE AND ADJUSTMENT 33
Heat Anticipator Setting 33
Drain Trap Priming 33
Furnace Operation 33
Furnace Start-Up 33
Furnace Shutdown 33
Gas Supply Pressure Measurement 33
Gas Manifold Pressure Measurement and Adjustment 34
Gas Input Rate Measurement—Natural Gas Only 35
Temperature Rise 35
Circulator Blower Speeds 36
Blower Heat Off Delay Timings 38
NORMAL SEQUENCE OF OPERATION 38
Power Up 38
Heating Mode 38
Cooling Mode 39
Fan Only Mode 39
Operational Checks 39
SAFETY CIRCUIT DESCRIPTION 39
General 39
Integrated Control Module 39
Primary Limit Control 39
Auxiliary Limit Controls 39
Rollout Limit Controls 39
Pressure Switches 40
Flame Sensor 40
MAINTENANCE 40
Annual Inspection 40
Filters 40
Burners 41
Induced Draft and Circulator Blowers 41
Condensate Trap and Drain System (Qualified Servicer Only) 41
Flame Sensor (Qualified Servicer Only) 41
Flue Passages (Qualified Servicer Only) 41
Before Leaving an Installation 41
Repair and Replacement Parts 41
TROUBLESHOOTING 42
Electrostatic Discharge (ESD) 42
Fault Recall 42
Resetting from Lockout 42
Status Codes 42
Diagnostic Chart 43
DIP Switch Chart 49
WIRING DIAGRAMS 50
ASSISTANCE OR SERVICE 52

GAS FURNACE SAFETY PRECAUTIONS

Please adhere to the following warnings and cautions when installing, adjusting, altering, servicing or operating the furnace. To ensure proper installation and operation, thoroughly read this manual for specifics pertaining to the installation and application of this product.

Recognize this symbol as a safety precaution.

WARNING

Hazards or unsafe practices could result in property damage, product damage, severe personal injury or death.

CAUTION

Hazards or unsafe practices may result in property damage, product damage, personal injury or death.

WARNING

The manufacturer will not be responsible for any injury or property damage arising from improper service or service procedures. If you install or perform service on this unit, you assume responsibility for any personal injury or property damage which may result. Many jurisdictions require a license to install or service heating and air conditioning equipment.

WARNING

To prevent personal injury or death due to improper installation, adjustment, alteration, service or maintenance, refer to this manual. For additional assistance or information, consult a qualified installer, service agency or the gas supplier.

WARNING

If the information in these instructions is not followed exactly, a fire or explosion may result causing property damage, personal injury or loss of life.

— Do not store or use gasoline or other flammable vapors and liquids in the vicinity of this or any other appliance.

— WHAT TO DO IF YOU SMELL GAS

- **Do not try to light any appliance.**
- **Do not touch any electrical switch; do not use any phone in your building.**
- **Immediately call your gas supplier from a neighbor's phone. Follow the gas supplier's instructions.**
- **If you cannot reach your gas supplier, call the fire department.**

— Installation and service must be performed by a qualified installer, service agency or the gas supplier.

WARNING

This product contains or produces a chemical or chemicals which may cause serious illness or death and which are known to the State of California to cause cancer, birth defects or other reproductive harm.

WARNING

Heating unit should not be utilized without reasonable, routine inspection, maintenance and supervision. If the building in which any such device is located will be vacant, care should be taken that such device is routinely inspected, maintained and monitored. In the event that the building may be exposed to freezing temperatures and will be vacant, all water-bearing pipes should be drained, the building should be properly winterized and the water source closed. In the event that the building may be exposed to freezing temperatures and will be vacant, any hydronic coil units should be drained as well, and, in such case, alternative heat sources should be utilized.

DANGER

CARBON MONOXIDE POISONING HAZARD

Special Warning for Installation of Furnace or Air Handling Units in Enclosed Areas such as Garages, Utility Rooms or Parking Areas.

Carbon monoxide producing devices (such as an automobile, space heater, gas water heater, etc.) should not be operated in enclosed areas such as unventilated garages, utility rooms or parking areas because of the danger of carbon monoxide (CO) poisoning resulting from the exhaust emissions. If a furnace or air handler is installed in an enclosed area such as a garage, utility room or parking area and a carbon monoxide producing device is operated therein, there must be adequate, direct outside ventilation.
This ventilation is necessary to avoid the danger of CO poisoning which can occur if a carbon monoxide producing device continues to operate in the enclosed area. Carbon monoxide emissions can be (re)circulated throughout the structure if the furnace or air handler is operating in any mode.

CO can cause serious illness including permanent brain damage or death.

⚠ WARNING

Should overheating occur or the gas supply fail to shut off, turn off the manual gas shutoff valve external to the furnace before turning off the electrical supply.

⚠ WARNING

Possible property damage, personal injury or death due to fire, explosion, smoke, soot, condensation, electrical shock or carbon monoxide may result from improper installation, repair, operation or maintenance of this product.

PRODUCT DESCRIPTION AND APPLICATION

Shipping Inspection

All units are securely packed in shipping containers tested according to International Safe Transit Association specifications. The carton must be checked upon arrival for external damage. If damage is found, a request for inspection by carrier's agent must be made in writing immediately.

The furnace must be carefully inspected on arrival for damage and bolts or screws which may have come loose in transit. In the event of damage, the consignee should:

1. Make a notation on the delivery receipt of any visible damage to the shipment or container.
2. Notify the carrier promptly and request an inspection.
3. With concealed damage, the carrier must be notified as soon as possible—preferably within 5 days.
4. File the claim with the following support documents within a 9-month statute of limitations.
   - Original or certified copy of the Bill of Lading, or indemnity bond.
   - Original paid freight bill or indemnity in lieu thereof.
   - Original or certified copy of the invoice, showing trade and other discounts or reductions.
   - Copy of the inspection report issued by carrier's representative at the time damage is reported to carrier.

The carrier is responsible for making prompt inspection of the damage and for a thorough investigation of each claim. The distributor or manufacturer will not accept claims from dealers for transportation damage.

Electrostatic Discharge (ESD)

NOTE: Discharge static electricity accumulated in the body before touching the unit. An electrostatic discharge can adversely affect electrical components.

Use the following steps during furnace installations and servicing to protect the integrated control module from damage. By putting the furnace, the control and the person at the same electrostatic potential, these steps will help avoid exposing the integrated control module to electrostatic discharge. This procedure is applicable to both installed and noninstalled (ungrounded) furnaces.

1. Disconnect all power to the furnace.

   NOTE: Do not touch the integrated control module or any wire connected to the control prior to discharging your body's electrostatic charge to ground.
2. Firmly touch a clean, unpainted, metal surface of the furnace away from the control. Any tools held in a person's hand during grounding will be discharged also.
3. Service the integrated control module or connecting wiring after following the discharge process in Step 2.

   NOTE: Do not recharge your body with static electricity by moving or shuffling your feet or touching ungrounded objects. If you touch an ungrounded object, repeat Step 2 before touching the control or wires.
4. Follow steps 1 through 3 before removing a new control from its container or installing the control on a furnace. Return any old or new controls to their containers before touching any ungrounded object.

To The Installer

Before installing this unit, please read this manual thoroughly to familiarize yourself with specific items which must be adhered to, including, but not limited to:

- Unit maximum external static pressure
- Gas pressures
- Btu input rating
- Proper electrical connections
- Circulating air temperature rise
- Minimum or maximum CFM
- Motor speed connections

Important Note to the Owner Regarding Product Warranty

Your warranty certificate is supplied as a separate document with the unit installed by your contractor. Read the limited warranty certificate carefully to determine what is and is not covered. Keep the warranty certificate in a safe place. If you are unable to locate the warranty certificate, please contact your installing contractor, or contact customer service at 1-866-944-7575 to obtain a copy.

To receive the Lifetime Heat Exchanger Limited Warranty, good for as long as you own your home, and the 10-Year Parts Limited Warranty, online registration must be completed within 60 days of installation. Online registration is not required in California or Quebec.

Full warranty details and instructions for models currently in production are available at www.whirlpoolhvac.com. If your model is not currently in production or does not appear on the website, please contact your installing contractor or contact customer service at 1-866-944-7575 to obtain a copy of your warranty certificate.

To register your unit, go to www.whirlpoolhvac.com. Click on the manufacturer's Comfort Commitment™ Warranty link located at the bottom center of the home page. Next, click on the Click Here to Register Your Product link located at the top center of the page, and complete the forms in the manner indicated.

⚠ WARNING

To prevent property damage, personal injury or death due to fire, do not install the furnace in a mobile home, trailer or recreational vehicle.

Product Application

This furnace is primarily designed for residential home-heating applications.

IMPORTANT:

- This furnace is not designed or certified for use in mobile homes, trailers or recreational vehicles.
- This furnace is not designed or certified for outdoor applications.
- The furnace must be installed indoors (for example, attic space, crawl space or garage area provided the garage area is enclosed with an operating door).

This furnace can be used in the following nonindustrial commercial applications:

- Schools
- Office buildings
- Churches
- Retail stores
- Nursing homes
- Hotels/motels
- Common areas
- Office areas

NOTE: In such applications, the furnace must be installed with the following stipulations:

- It must be installed according to the installation instructions provided and according to local and national codes.
- It must be installed indoors in a building constructed on site.
- It must be part of a ducted system and not used in a free air delivery application.
- It must not be used as a “makeup” air unit.
- It must be installed with 2-pipe systems for combustion air, especially if VOC’s or other contaminants are present in the conditioned space.
- All other warranty exclusions and restrictions apply.

This furnace is an ETL dual-certified appliance and is appropriate for use with Natural or propane gas

NOTE: If you are using propane, a propane conversion kit is required.

Dual certification means that the combustion air inlet pipe is optional, and the furnace can be vented as a:

- Nondirect vent (single pipe) central forced air furnace in which combustion air is taken from the installation area or from air ducted from the outside or a,
- Direct vent (dual pipe) central forced air furnace in which all combustion air supplied directly to the furnace burners through a special air intake system outlined in these instructions.

This furnace may be used as a construction site heater only if all of the following conditions are met:

- The vent system is permanently installed according to these installation instructions.
- A room thermostat is used to control the furnace. Fixed jumpers that provide continuous heating cannot be used and can cause long term equipment damage.
- Return air ducts are provided and sealed to the furnace.
- A return air temperature range between 60ºF and 80ºF (16ºC and 27ºC) is maintained.
- Air filters are installed in the system and maintained during construction, replaced as appropriate during construction and upon completion of construction.
- The input rate and temperature rise are set according to the furnace rating plate.
- 100% outside air is provided for combustion air requirements during construction. Temporary ducting can be used.

  NOTE: Do not connect the temporary duct directly to the furnace. The duct must be sized for adequate combustion and ventilation in accordance with the latest edition of the National Fuel Gas Code NFPA 54/ANSI Z223.1 or CAN/CSA B149.1 Installation Codes.
- The furnace heat exchanger, components, duct system, air filters and evaporator coils are thoroughly cleaned following the final construction cleanup.
- All furnace operating conditions (including ignition, input rate, temperature rise and venting) are verified according to these installation instructions.

NOTE: The Commonwealth of Massachusetts requires that the following additional requirements must also be met:

- Gas furnaces must be installed by a licensed plumber or gas fitter.
- A T-handle gas cock must be used.
- If the unit is to be installed in an attic, the passageway to and the service area around the unit must have flooring.

To ensure proper furnace operation, you must install, operate and maintain the furnace in accordance with these installation and operation instructions, all local building codes and ordinances. In their absence, follow the latest edition of the National Fuel Gas Code (NFPA 54/ANSI Z223.1), and/or CAN/CSA B149 Installation Codes, local plumbing or waste water codes and other applicable codes.

A copy of the National Fuel Gas Code (NFPA 54/ANSI Z223.1) can be obtained from any of the following:

American National Standards Institute
1430 Broadway
New York, NY 10018

National Fire Protection Association
1 Batterymarch Park
Quincy, MA 02269

CSA International
8501 East Pleasant Valley
Cleveland, OH 44131

The rated heating capacity of the furnace should be greater than or equal to the total heat loss of the area to be heated. The total heat loss should be calculated by an approved method or in accordance with “ASHRAE Guide” or “Manual J-Load Calculations” published by the Air Conditioning Contractors of America.

A copy of the CAN/CSA B149 Installation Codes can also be obtained from:

CSA International
178 Rexdale Boulevard
Etobicoke, Ontario, Canada M9W 1R3

LOCATION REQUIREMENTS AND CONSIDERATIONS

Follow the instructions listed below when selecting a furnace location. Refer also to the guidelines provided in “Combustion and Ventilation Air Requirements.”

⚠ WARNING

To prevent possible equipment damage, property damage, personal injury or death, the following bullet points must be observed when installing the unit.

⚠ WARNING

Possible property damage, personal injury or death due to fire, explosion, smoke, soot, condensation, electrical shock or carbon monoxide may result from improper installation, repair, operation or maintenance of this product.

- Centrally locate the furnace with respect to the proposed or existing air distribution system.
- Check that the temperature of the return air entering the furnace is between 55°F and 100°F (13ºC and 38ºC) when the furnace is heating.
- Provide provisions for venting combustion products outdoors through a proper venting system. Special consideration should be given to the vent/flue pipe routing and the combustion air intake pipe when applicable. Refer to "Termination Locations" in "Vent/Flue Pipe and Combustion Air Pipe" for appropriate termination locations and to determine if the piping system from the furnace to the termination can be accomplished within the guidelines given.

  NOTE: The length of flue and/or combustion air piping can be a limiting factor in the location of the furnace.
- Locate the furnace so that the condensate flows downward to the drain.

  NOTE: Do not locate the furnace or its condensate drainage system in any area subject to below freezing temperatures without the proper freeze protection. Refer to "Condensate Drain Lines and Trap" for further details.
- Check that adequate combustion air is available for the furnace. Improper or insufficient combustion air can expose building occupants to gas combustion products that could include carbon monoxide. Refer to "Combustion and Ventilation Air Requirements."
- Set the furnace on a level floor to enable proper condensate drainage. If the floor becomes wet or damp at times, place the furnace above the floor on a concrete base sized approximately 1½" (3.8 cm) larger than the base of the furnace. Refer to "Horizontal Applications and Considerations" for leveling of horizontal furnaces.
- Check that the upflow or horizontal furnaces are not installed directly on carpeting, or any other combustible material.

  NOTE: The only combustible material allowed is wood.
- A special accessory subbase must be used for the upright counterflow unit installations over any combustible material (including wood). Refer to subbase instructions for installation details.

  NOTE: A subbase will not be required if an air conditioning coil is located beneath the furnace between the supply air opening and the combustible floor.
- Exposure to contaminated combustion air will result in safety and performance-related problems.

  NOTE: Do not install the furnace where the combustion air is exposed to the following substances:

  Chlorinated waxes or cleaners
  Chlorine-based swimming pool chemicals
  Water softening chemicals
  Deicing salts or chemicals
  Carbon tetrachloride
  Halogen-type refrigerants
  Cleaning solutions (such as perchloroethylene)
  Printing inks
  Paint removers
  Varnishes
  Hydrochloric acid
  Cements and glues
  Antistatic fabric softeners for clothes dryers
  Masonry acid washing materials
- Seal off a nondirect vent furnace if it is installed near an area frequently contaminated by any of the above substances. This protects the nondirect vent furnace from airborne contaminants. To ensure that the enclosed nondirect vent furnace has an adequate supply of combustion air, vent from a nearby uncontaminated room or from outdoors. Refer to "Combustion and Ventilation Air Requirements" for details.
- If the furnace is used in connection with a cooling coil unit, install the furnace upstream or in parallel with the cooling coil unit. Premature heat exchanger failure will result if the cooling coil unit is placed ahead of the furnace.
- If the furnace is installed in an application where the typical operating sound level of a furnace is deemed objectionable, an optional sound reduction kit is available. Consult your local distributor for more details.
- If the furnace is installed in a residential garage, position the furnace so that the burners and ignition source are located not less than 18" (45.7 cm) above the floor. Protect the furnace from physical damage by vehicles.
- If the furnace is installed horizontally, ensure the furnace access doors are not on the "up/top" or "down/bottom" side of the furnace.
- Do not connect the furnace to a chimney flue that serves a separate appliance designed to burn solid fuel.
- On counterflow installations, the air conditioning coil must be downstream on the supply (positive) side of the furnace heat exchanger.

Counterflow Installation Over a Noncombustible Floor

- Before setting the furnace over the plenum opening, ensure that the surface around the opening is smooth and level. A tight seal should be made between the furnace base and floor by using a silicone rubber caulking compound or cement grout.

Counterflow Installation Over a Combustible Floor

- If installation over a combustible floor becomes necessary, use an accessory subbase (see Specification Sheet applicable for your model for details). A special accessory subbase must be used for upright counterflow unit installations over any combustible material including wood. Refer to subbase instructions for installation details. Follow the instructions with the subbase for proper installation.

  NOTES:
  - Do not install the furnace directly on carpeting, tile or other combustible material other than wood flooring.
  - The subbase will not be required if an air conditioning coil is installed between the supply air opening on the furnace and the floor.

Clearances and Accessibility

Installations must adhere to the clearances to combustible materials to which this furnace has been design-certified. The minimum clearance information for this furnace is provided on the unit's clearance label. These clearances must be permanently maintained. Clearances must also accommodate an installation's gas, electrical, drain trap and drain line connections. If the alternate combustion air intake or vent/flue connections are used, additional clearance must be provided to accommodate these connections. Refer to "Vent/Flue Pipe and Combustion Air Pipe" for details.

NOTE: In addition to the required clearances to combustible materials, a minimum of 24" (61 cm) service clearance must be available in front of the unit.

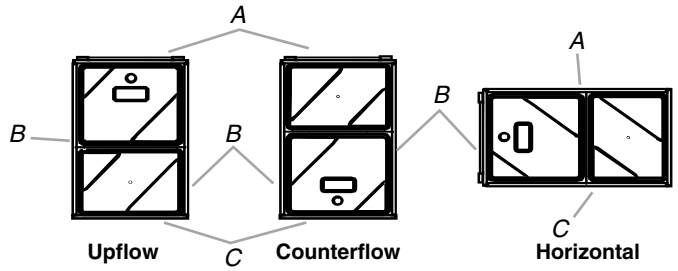

A. Top
B. Side
C. Bottom

A furnace installed in a confined space (for example, a closet or utility room) must have 2 ventilation openings with a total minimum free area of 0.25 sq. in. per 1,000 Btu/h of furnace input rating. Refer to the Specification Sheet applicable to your model for minimum clearances to combustible surfaces. One of the ventilation openings must be within 12" (30.5 cm) of the top. The other opening must be within 12" (30.5 cm) of the bottom of the confined space. In a typical construction, the clearance between the door and door frame is usually adequate to satisfy this ventilation requirement.

Furnace Suspension

If suspending the furnace from rafters or joists, use ⅜" threaded rod and 2" x 2" x ⅛" (5.1 cm x 5.1 cm x 3.2 mm) angle iron as shown in “Suspended Furnace” illustration. The length of rod will depend on the application and the clearances necessary.

NOTE: In a horizontal installation, the air conditioning coil must be adequately supported by the proper brackets and supports. Inadequate coil support can result in furnace cabinet distortion and air leakage.

Suspended Furnace

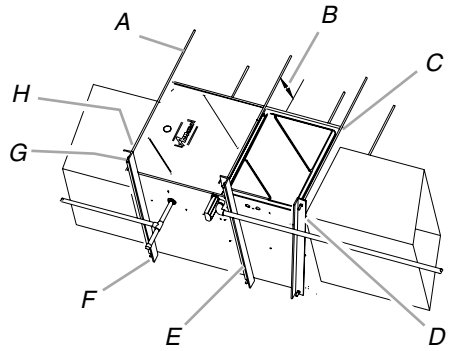

A. ⅜" (1 cm) diameter threaded rod (6)
B. 8" (20.3 cm) minimum clearance between center rod and furnace cabinet to allow for circulator blower removal.
C. Level furnace end to end, slight forward tilt with front 0" to ¾" (1.9 cm) below back.
D. Tilt outward to allow for door and circulator blower removal.
E. Position as close as possible to blower deck to allow for circulator blower removal.
F. 2" x 2" x ⅛" (5.1 cm x 5.1 cm x 3.2 mm) angle iron (3)
G. Support nuts
H. Hold down nuts

Existing Furnace Removal

NOTE: When an existing furnace is removed from a venting system serving other appliances, the venting system may be too large to properly vent the remaining attached appliances.

The following vent testing procedure is reproduced from the American National Standard/National Standard of Canada for Gas-Fired Central Furnaces ANSI Z21.47—latest edition, CSA-2.3 latest edition Section 1.23.1.

The following steps shall be followed with each appliance connected to the venting system placed in operation, while any other appliances connected to the venting system are not in operation:

1. Seal any unused openings in the venting system.
2. Inspect the venting system for proper size and horizontal pitch, as required by the National Fuel Gas Code, ANSI Z223.1 or the Natural Gas and Propane Installation Code, CSA B149.1-05 and these instructions. Determine that there is no blockage or restriction, leakage, corrosion and other deficiencies which could cause an unsafe condition.
3. As far as practical, close all building doors and windows and all doors between the space in which the appliance(s) connected to the venting system are located and other spaces of the building.
4. Close fireplace dampers.
5. Turn on clothes dryers and any appliance not connected to the venting system. Turn on any exhaust fans, such as range hoods and bathroom exhausts, so they shall operate at maximum speed. Do not operate a summer exhaust fan.
6. Follow the lighting instructions. Place the appliance being inspected in operation. Adjust thermostat so appliance shall operate continuously.
7. Test for spillage from draft hood appliances at the draft hood relief opening after 5 minutes of main burner operation. Use the flame of a match or candle.
8. After it has been determined that each appliance connected to the venting system properly vents when tested as outlined above, return doors, windows, exhaust fans, fireplace dampers and any other gas-burning appliance to their previous conditions of use.
9. If improper venting is observed during any of the above tests, the venting system must be corrected in accordance with the National Fuel Gas Code ANSI Z223.1/NFPA 54 and/or National Gas and Propane Installation Code CSA B149.1-05.

If resizing is required on any portion of the venting system, use the appropriate table in Appendix G in the latest edition of the National Fuel Gas Code ANSI Z223.1 and/or National Gas and Propane Installation Code CSA B149.1-05.

Thermostat Location

The thermostat should be placed approximately 5 ft (1.5 m) from the floor on a vibration-free, inside wall in an area having good air circulation.

NOTE: Do not install the thermostat where it may be influenced by any of the following:

- Drafts, or dead spots behind doors, in corners or under cabinets
- Hot or cold air from registers
- Radiant heat from the sun
- Light fixtures or other appliances
- Radiant heat from a fireplace
- Concealed hot or cold water pipes or chimneys
- Unconditioned areas behind the thermostat, such as an outside wall

Consult the instructions packaged with the thermostat for mounting instructions and further precautions.

Combustion and Ventilation Air Requirements

WARNING

To avoid property damage, personal injury or death, sufficient fresh air for proper combustion and ventilation of flue gases must be supplied. Most homes require outside air be supplied into the furnace area.

Improved construction and additional insulation in buildings have reduced heat loss by reducing air infiltration and escape around doors and windows. These changes have helped in reducing heating/cooling costs but have created a problem supplying combustion and ventilation air for gas-fired and other fuel-burning appliances. Appliances that pull air out of the house (clothes dryers, exhaust fans, fireplaces, etc.) increase the problem by starving appliances for air.

House depressurization can cause back drafting or improper combustion of gas-fired appliances, thereby exposing building occupants to gas combustion products that could include carbon monoxide.

If this furnace is to be installed in the same space with other gas appliances, such as a water heater, ensure there is an adequate supply of combustion and ventilation air for the other appliances. Refer to the latest edition of the National Fuel Gas Code NFPA 54/ANSI Z223.1 or CAN/CSA B149 Installation Codes or applicable provisions of the local building codes for determining the combustion air requirements for the appliances.

Most homes will require outside air to be supplied to the furnace area by means of ventilation grilles or ducts connecting directly to the outdoors or spaces open to the outdoors such as attics or crawl spaces.

Installation Positions

This furnace may be installed in an upright position or horizontal on either the left or right side panel.

NOTE: Do not install this furnace on its back.

For upright upflow furnaces, the return air ductwork may be attached to the side panel(s) and/or base pan.

For horizontal upflow furnaces, the return air ductwork must be attached to the base pan.

For both the upright or horizontal counterflow furnaces, the return air ductwork must be attached to the base pan (top end of the blower compartment).

NOTE: Do not attach the ductwork to the back of the furnace.

Contact your local distributor for the proper airflow requirements and the number of required ductwork connections. See the “Recommended Installation Positions” illustrations for the appropriate installation positions, ductwork connections and the resulting airflow arrangements.

HORIZONTAL APPLICATIONS AND CONSIDERATIONS

Horizontal applications, in particular, may dictate many of the installation’s specifics such as airflow direction, ductwork connections, flue and combustion air pipe connections, etc. The basic application of this furnace as a horizontal furnace differs only slightly from an upright installation.

When installing a furnace horizontally, additional consideration must be given to the following:

- Drain trap and lines
- Leveling the furnace
- Alternate vent/flue and combustion air connections
- Alternate electrical and gas line connections
- Drain pan
- Freeze protection
- Furnace suspension.

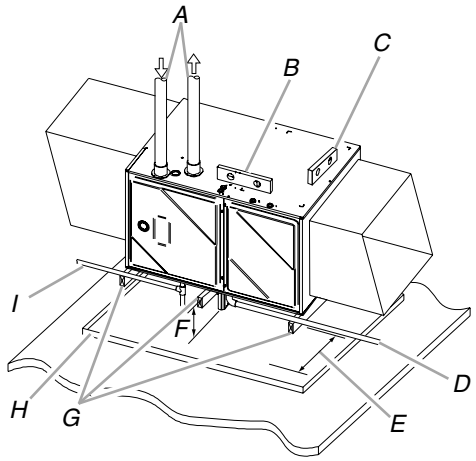

A. Alternate vent/flue location
B. Level end-to-end
C. Level side-to-side or slightly tilted—doors 0" to ¾" (1.9 cm) below back panel
D. Drain line— ¼" (6.4 mm) per foot downward slope
E. 24" (61 cm) minimum service clearance
F. 4¾" (12.1 cm) minimum drain trap clearance
G. Supports at both ends and middle
H. Drain pan
I. Gas line with 3" (7.6 cm) minimum drip leg

Drain Trap and Lines

In horizontal applications, the condensate drain trap is secured to the furnace side panel, suspending it below the furnace. A minimum clearance of 4¾" (12.1 cm) below the furnace must be provided for the drain trap. Additionally, the appropriate downward piping slope must be maintained from the drain trap to the drain location. Refer to “Condensate Drain Trap and Lines” for further details. If the drain trap and drain line will be exposed to temperatures near or below freezing, adequate measures must be taken to avoid condensate from freezing.

Leveling

Leveling ensures proper condensate drainage from the heat exchanger and induced draft blower. For proper flue pipe drainage, the furnace must be level lengthwise from end to end. The furnace should also be level from back to front, or have a slight tilt with the access doors sloping downward ¾" (1.9 cm) lower than the back panel. The slight tilt allows the heat exchanger condensate, generated in the recuperator coil, to flow forward to the recuperator coil front cover.

Alternate Vent/Flue Connections

In horizontal installations, provisions for alternate flue and combustion air piping are available for upflow furnaces with left discharge and counterflow furnaces with right air discharge. This configuration allows the flue and combustion air piping to be run vertically through the side of the furnace. Refer to the “Recommended Installation Positions” illustrations for further details. The standard piping connections may also be used in these positions.

See “Vent/Flue Pipe and Combustion Air Pipe” for details concerning the conversion to the alternate vent/flue and combustion air connections.

When using the horizontal alternate vent configuration, you must use the RF000142 vent drain kit. See “Alternate Flue/Vent Location” illustration.

NOTE: Alternate vertical piping connections cannot be used when an upflow furnace is installed with the supply air discharging to the right, or when a counterflow furnace is installed with the supply air discharging to the left. In either case, use the standard flue and combustion air piping connections.

Alternate Flue/Vent Location

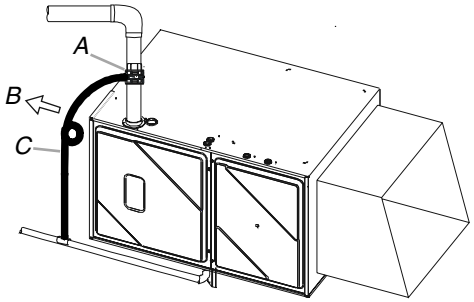

A. Vent/Drain
B. Airflow
C. Field supplied drain hose

NOTES:

- The field supplied drain hose is connected from the vent/drain connection to the condensate drain line with a field supplied connector.
- Make a small loop in the drain hose to serve as a P-trap.

Recommended Installation Positions—Upright Upflow

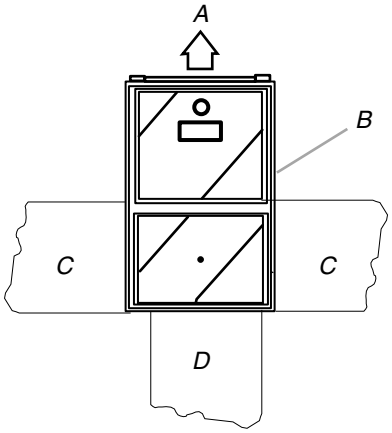

A. Air discharge
B. Alternate flue pipe location
C. Side return duct connections
D. Bottom return duct connection

Recommended Installation Positions—Horizontal Upflow—Left Side Panel Discharge

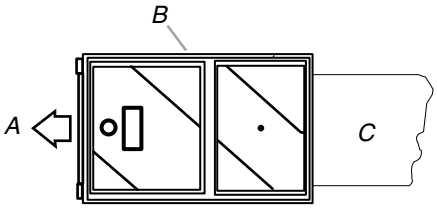

A. Air discharge
B. Alternate flue pipe location
C. Bottom return duct connection

Recommended Installation Positions—Horizontal Upflow—Right Side Panel Discharge

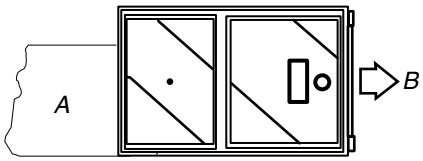

A. Bottom return duct connection
B. Air discharge

Alternate Electrical and Gas Line Connections

This furnace has provisions allowing for electrical and gas line connections through either side panel. In horizontal applications, the connections can be made either through the top or bottom of the furnace.

Drain Pan

A drain pan must be provided if the furnace is installed above a conditioned area. The drain pan must cover the entire area under the furnace (and air conditioning coil, if applicable).

Freeze Protection

Refer to “Horizontal Applications and Conditions—Drain Trap and Lines.”

Furnace Suspension

If the furnace is installed in a crawl space, it must be suspended from the floor joist or supported by a concrete pad.

NOTE: Never install the furnace on the ground or allow it to be exposed to water. Refer to “Location Requirements and Considerations—Furnace Suspension” for further details.

PROPANE GAS/HIGH ALTITUDE INSTALLATIONS

⚠ WARNING

Possible property damage, personal injury or death may occur if the correct conversion kits are not installed. The appropriate kits must be applied to ensure safe and proper furnace operation. All conversions must be performed by a qualified installer or service agency.

This furnace is shipped from the factory configured for Natural gas at standard altitude. Propane gas installations require an orifice change to compensate for the energy content difference between Natural and propane gas.

High altitude installations may require both a pressure switch and an orifice/spring change. These changes are necessary to compensate for the natural reduction in the density of both the gas fuel and the combustion air at higher altitude.

For installations above 7,000 ft (2,133.6 m), refer to your distributor for required kit(s).

Gas	Altitude	Kit	Orifice	Manifold Pressure High Stage	Manifold Pressure Low Stage	Pressure Switch Change
Natural	0 to 7,000 ft (2,133.6 m)	None	#43	3.5" W.C.	1.9" W.C.	None
Propane		LPM-05* LPM-06*	#55	10.0" W.C.	6.0" W.C.	None

NOTES:

- LPM-05* supports White-Rodgers 2-stage valve only.
- LPM-06* supports both Honeywell and White-Rodgers 2-stage valves.
- In Canada, gas furnaces are only certified to 4,500 ft (1,371.6 m).

Contact the distributor for a tabular listing of appropriate manufacturer's kits for propane gas and/or high-altitude installations. The indicated kits must be used to insure proper furnace operation. All conversions must be performed by a qualified installer or service agency.

VENT/FLUE PIPE AND COMBUSTION AIR PIPE

WARNING

Failure to follow these instructions can result in bodily injury or death. Carefully read and follow all instructions given in this section.

WARNING

Upon completion of the furnace installation, carefully inspect the entire flue system both inside and outside of the furnace to assure it is properly sealed. Leaks in the flue system can result in serious personal injury or death due to exposure to flue products, including carbon monoxide.

A condensing gas furnace achieves its high level of efficiency by extracting almost all of the heat from the products of combustion and cooling them to the point where condensation takes place. Because of the relatively low flue gas temperature and water condensation requirements, PVC pipe is used as venting material.

NOTES:

- This furnace must not be connected to Type B, BW, or L vent or vent connector, and must not be vented into any portion of a factory-built or masonry chimney except when used as a pathway for PVC as described later in this section.
- Do not common vent this appliance with another appliance or use a vent which is used by a solid fuel appliance.
- Do not use commercially available "no hub connectors" other than those shipped with this product.

It is the responsibility of the installer to follow the manufacturers' recommendations and to verify that all vent/flue piping and connectors are compatible with furnace flue products. Additionally, it is the responsibility of the installer to ensure that all piping and connections possess adequate structural integrity and support to avoid flue pipe separation, shifting or sagging during furnace operation.

Dual Certification: Nondirect/Direct Vent

This furnace is dual certified and may be installed as a nondirect vent (single pipe) or direct vent (dual pipe) appliance. A nondirect vent installation requires only a vent/flue pipe, while a direct vent installation requires both a vent/flue pipe and a combustion air intake pipe. Refer to the appropriate section for details concerning piping size, length, number of elbows, furnace connections and terminations.

Materials and Joining Methods

WARNING

To avoid bodily injury, fire or explosion, solvent cements must be kept away from all ignition sources (for example, sparks, open flames and excessive heat) as they are combustible liquids. Avoid breathing cement vapors or contact with skin and/or eyes.

2" or 3" (5.1 cm or 7.6 cm) nominal diameter PVC Schedule 40 pipe meeting ASTM D1785, PVC primer meeting ASTM F656 and PVC solvent cement meeting ASTM D2564 specifications must be used. Fittings must be DWV type fittings meeting ASTM D2665 and ASTM D3311. Carefully follow the pipe manufacturer's instructions for cutting, cleaning and solvent cementing of PVC.

The use of Schedule 40 PVC Cellular Core (Foam Core) plastic pipe is also acceptable as a flue/vent and intake pipe material. PVC primer meeting ASTM F656 and PVC solvent cement meeting ASTM D2564 specifications must be used. Fittings must be DWV type fittings meeting ASTM D2665 and ASTM D3311. Carefully follow the manufacturer's instructions for cutting, cleaning and solvent cementing of PVC.

As an alternative to PVC pipe, primer, solvent cement and fittings, ABS materials which are in compliance with the following specifications may be used. 2" or 3" (5.1 cm or 7.6 cm) ABS Schedule 40 pipe must meet ASTM D1527 and, if used in Canada, must be CSA approved. Solvent cement for ABS to ABS joints must meet ASTM D2235 and, if used in Canada, must be CSA approved. The solvent cement for the PVC to ABS transition joint must meet ASTM D3138. Fittings must be DWV type fittings meeting ASTM D2661 and ASTM D3311 and, if used in Canada, must be CSA approved. Carefully follow the manufacturer's instructions for cutting, cleaning, and solvent cementing PVC and/or ABS.

All 90° elbows must be medium-radius (¼ bend DWV) or long-radius (long sweep ¼ bend DWV) types conforming to ASTM D3311. A medium-radius (¼ bend DWV) elbow measures 3 1/16" (7.8 cm) minimum from the plane of one opening to the centerline of the other opening for 2" (5.1 cm) diameter pipe, and 4 9/16" (11.6 cm) minimum for 3" (7.6 cm) pipe.

Proper Vent/Flue and Combustion Air Piping Practices

Adhere to these instructions to ensure safe and proper furnace performance. The length, diameter and number of elbows of the vent/flue pipe and combustion air pipe (when applicable) affects the performance of the furnace and must be carefully sized. All piping must be installed in accordance with local codes and these instructions.

Piping must be adequately secured and supported to prohibit sagging, joint separation and/or detachment from the furnace. Horizontal runs of vent/flue piping must be supported every 3 ft to 5 ft (91.4 cm to 1.5 m) and must maintain a ¼" (6.4 mm) per foot downward slope, back toward the furnace, to properly return condensate to the furnace's drain system. Allowances should be made for minor expansion and contraction due to temperature variations. For this reason, particular care must be taken to secure piping when a long run is followed by a short offset of less than 40" (101.6 cm).

Precautions should be taken to prevent condensate from freezing inside the vent/flue pipe and/or at the vent/flue pipe termination. All vent/flue piping exposed to freezing temperatures below 35°F (2°C) for extended periods of time must be insulated with ½" (1.3 cm) thick closed-cell foam. Also all vent/flue piping exposed outdoors in excess of the terminations shown in this manual (or in unheated areas) must be insulated with ½" (1.3 cm) thick closed-cell foam. Inspect piping for leaks prior to installing insulation.

Termination Locations

NOTE: Refer to "Location Requirements and Considerations" for combustion air contaminant restrictions.

The following bullets and illustration describe the restrictions concerning the appropriate location of vent/flue pipe and combustion air intake pipe (when applicable) terminations. Refer to "Nondirect Vent (Single Pipe) Piping and Direct Vent (Dual Pipe) Piping" located in this section for specific details on termination construction.

- All terminations (flue and/or intake) must be located at least 12" (30.5 cm) above ground level or the anticipated snow level.
- Vent terminations (nondirect and direct vent) must terminate at least 3 ft (91.4 cm) above any forced air inlet located within 10 ft (3 m).

  NOTE: This provision does not apply to the combustion air intake termination of a direct vent application.
- The vent termination of a nondirect vent application must terminate at least 4 ft (121.9 cm) below, 4 ft (121.9 cm) horizontally from or 12" (30.5 cm) above any door, window or gravity air inlet into any building.
- The vent termination of a direct vent application must terminate at least 12" (30.5 cm) from any opening through which flue gases may enter a building (door, window or gravity air inlet).
- The vent termination of vent pipe run vertically through a roof must terminate at least 12" (30.5 cm) above the roof line (or the anticipated snow level) and be at least 12" (30.5 cm) from any vertical wall (including any anticipated snow buildup).
- A vent termination shall not terminate over public walkways or over an area where condensate or vapor could create a nuisance or hazard or could be detrimental to the operation of regulators, relief valves or other equipment.
- The combustion air intake termination of a direct vent application should not terminate in an area which is frequently dusty or dirty.

Vent Termination Clearances

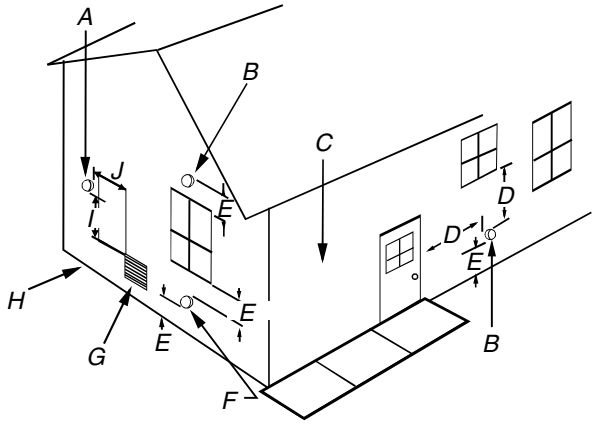

A. Nondirect vent and direct vent vent/flue terminations
B. Nondirect vent—vent/flue terminations
C. No terminations above walkway
D. 48" (121.9 cm minimum)
E. 12" (30.5 cm) minimum
F. Direct vent—vent/flue termination
G. Forced air inlet
H. Grade or highest anticipated snow level
I. 3" (7.6 cm) minimum
J. Less than 10 ft (3 m)

NOTE: In Canada, the Canadian Fuel Gas Code takes precedence over the preceding termination restrictions.

Canadian Venting Requirements

In Canada, venting must conform to the requirements of the current CAN/CSA-B149.1-05 Installation Code. Use only CSA-listed, ULC-S636 compliant 2" or 3" (5.1 cm or 7.6 cm) diameter PVC or ABS pipe, solvent cement and fittings throughout. The certified piping should be clearly marked with the ULC Std "S636" on the pipe and fittings. Carefully follow the pipe manufacturers' instructions for cutting, cleaning and solvent cementing PVC and/or ABS.

The vent can be run through an existing unused chimney provided the space between the vent pipe and the chimney is insulated and closed with a weather-tight, corrosion-resistant flashing.

Standard Furnace Connections

It is the responsibility of the installer to ensure that the piping connections to the furnace are secure, airtight and adequately supported.

As shipped, attachment "couplings" for vent/flue and combustion air intake pipe connections are provided on the furnace's top cover (upflow) or base pan (counterflow). To use the standard connections, field-supplied vent/flue pipe and combustion air intake pipe (when applicable) should be secured directly to the furnace at these locations.

Vent/Flue Pipe

Vent/flue pipe can be secured to the vent/flue coupling using the rubber coupling and worm gear hose clamps provided with this furnace. See “Standard Connections” illustration. The rubber coupling allows separation of the vent/flue pipe from the furnace during servicing. Combustion air and vent piping should be routed in a manner to avoid contact with refrigerant lines, metering devices, condensate drain lines, etc. If necessary, clearances may be increased by utilizing two 45º long-sweep elbows and creating an “S” joint to provide additional space at connection locations. This joint can be rotated on the fitting to establish maximum clearance between refrigerant lines, metering devices, condensate drain lines, etc. This joint is the equivalent of one 90º elbow when considering elbow count.

Increased Clearance Configuration

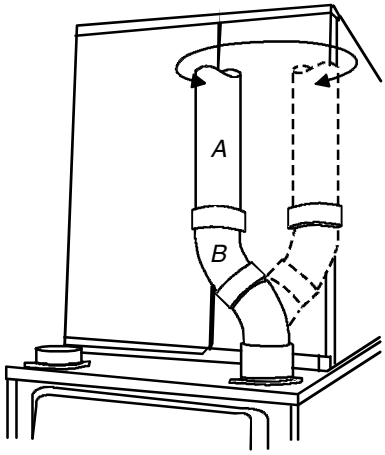

A. Vent pipe
B. 45º long-sweep elbows

NOTES:

- Do not use other commercially available “no hub connectors” due to possible material conflicts.
- The vent/flue pipe can also be secured using a PVC or ABS elbow or coupling using the appropriate glue (see “Materials and Joining Methods”).
- For nondirect vent installations, a minimum of one 90° elbow should be installed on the combustion air intake coupling to guard against inadvertent blockage.

Combustion Air Pipe—Direct Vent Installations

On upflow units, secure the combustion air intake pipe directly to the air intake coupling. On counterflow units secure the combustion air intake pipe to the air intake coupling using the rubber coupling and worm gear hose clamps provided with the unit. The counterflow rubber coupling allows service removal of air intake piping internal to the furnace blower compartment.

NOTE: Because of probable material conflicts, do not use other commercially available “no hub connectors.” The combustion air intake pipe can also be secured directly to the counterflow unit air intake pipe coupling.

Combustion Air Pipe—Nondirect Vent Installations

A minimum of one 90° elbow should be installed on the combustion air intake coupling to guard against inadvertent blockage.

Standard Connection—Upflow

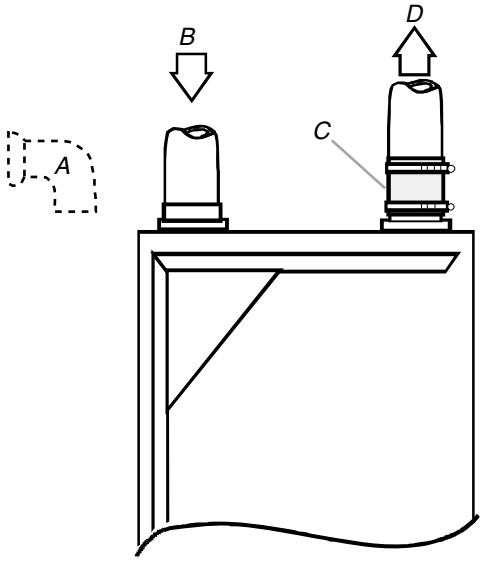

A. 90º PVC elbow (nondirect vent only)
B. Combustion air pipe (direct vent only)
C. Rubber coupling with worm gear hose clamps
D. Vent/flue pipe

Standard Connection—Counterflow

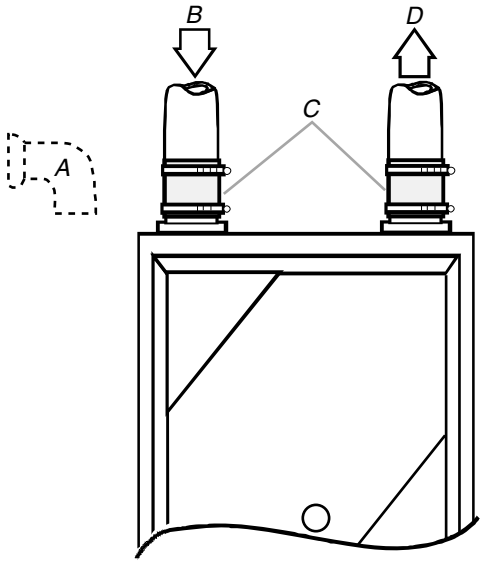

A. 90º PVC elbow (nondirect vent only)
B. Combustion air pipe (direct vent only)
C. Rubber couplings with worm gear hose clamps
D. Vent/flue pipe

Alternate Furnace Connections

If the standard locations are undesirable for a specific installation, alternate side panel locations are available for both combustion air inlet and vent/flue pipe connections. These locations may be of particular benefit to upright upflow installations requiring additional access to an A coil, or to upright counterflow installations requiring additional access to a filter or electronic air cleaner, or to horizontal installations desiring vent/flue (and combustion air intake) piping run vertically from the side of the cabinet.

NOTE: Standard and alternate locations can be combined (for example, an installation may use the standard combustion air intake location but use the alternate vent/flue location or vice versa), if needed.

⚠ WARNING

Edges of sheet metal holes may be sharp. Use gloves as a precaution when removing hole plugs.

Alternate Vent/Flue Location

The alternate vent/flue location is the large hole directly in line with the induced draft blower outlet. To use the alternate vent/flue location, refer to the following steps and the "Alternate Vent/Flue Location" illustration.

NOTE: Counterflow instructions follow the upflow instructions.

Upflow Units

1. Remove and save the 4 screws securing the vent/flue coupling to the furnace top panel.

Counterflow Units

Remove and save the 4 screws securing the vent/flue coupling to the furnace base pan. Also remove the 3 screws securing the furnace's internal vent/flue piping to the blower deck.

Upflow and Counterflow Units

2. Loosen the worm gear hose clamps on the rubber elbow and detach the rubber elbow from both the induced draft blower and the vent/flue pipe.
3. Remove the vent/flue pipe from the furnace.

Upflow Units

4. Cut the vent/flue pipe 3¾" (9.5 cm) from the flanged end of the pipe. See "Vent/Flue Pipe Cuts" illustration.

   NOTE: The section of pipe attached to the coupling will reach through the side panel to the induced draft blower.
5. Discard remaining pipe and elbows.

Counterflow Units

Cut the vent/flue pipe 3¾" (9.5 cm) from the blower deck coupling. See "Vent/Flue Pipe Cuts" illustration

Save vent/flue pipe attached to the blower deck coupling for use in the alternate location.

Discard remaining pipe and elbows.

Vent/Flue Pipe Cuts

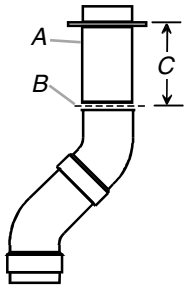

A. Flange
B. Cut location
C. 3¾" (9.5 cm)

Upflow Units

6. Remove the plastic plug from the alternate vent/flue location.
7. Relocate and install the plastic plug in the standard vent/flue location (top cover).

Counterflow Units

Remove the plastic plug from the alternate vent/flue location.

Relocate and install the plastic plug in the standard vent/flue location (base pan).

Plug remaining hole in the blower deck with the plastic plug included in the drain kit bag.

Upflow and Counterflow Units

8. Insert the cut section of the vent/flue pipe and coupling into the alternate vent/flue location.
9. Attach the vent/flue pipe and coupling to the induced draft blower using a rubber coupling and worm gear hose clamps provided in the drain kit bag.
10. Secure the coupling to the cabinet using the screws removed in Step 1 or with field-supplied ⅜" #8 self-drilling screws.

⚠ WARNING

The rubber elbow is not designed to support a load. When the rubber elbow is mounted externally to the furnace cabinet, extreme care must be taken to adequately support field-supplied vent/flue piping, as damage can result in leaks causing bodily injury or death due to exposure to flue gases, including carbon monoxide.

11. For upright installations, externally mount the rubber elbow to the vent/flue coupling using a worm gear hose clamp.
12. Secure the field-supplied vent/flue piping to the rubber elbow using a worm gear hose clamp.

    NOTE: Use of the alternate vent/flue location for upright installations, requires the drain trap to be installed on the same side of the furnace as the flue pipe.
13. For horizontal installations, externally secure the field supplied vent/flue pipe directly to the vent/flue coupling using a PVC or ABS coupling or elbow.

Alternate Vent/Flue Location—Upflow

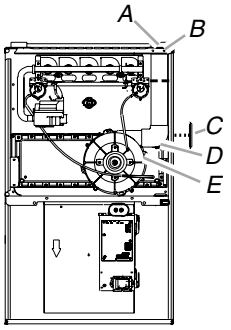

A. Vent/flue pipe
B. Screw locations (4)
C. Plastic plug—alternate vent/flue location
D. Rubber elbow
E. Induced draft blower

Alternate Vent/Flue Location—Counterflow/Upright (Upflow Similar)

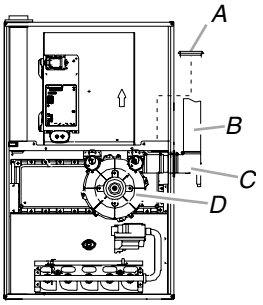

A. Plastic plug from drain kit bag
B. Vent/flue pipe
C. Rubber elbow
D. Induced draft blower

Alternate Vent/Flue Location—Counterflow

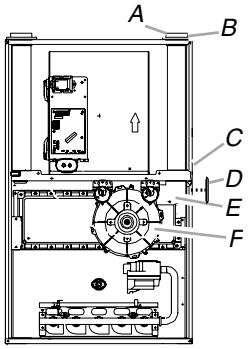

A. Vent/flue pipe
B. Screw locations (4)
C. Screw locations (3)
D. Plastic plug—alternate vent/flue location
E. Rubber elbow
F. Induced draft blower

Alternate Vent/Flue Location—Upflow/Horizontal (Counterflow Similar)

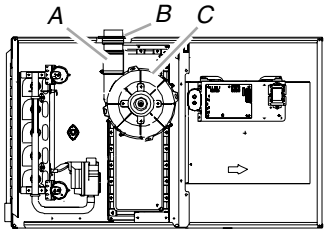

A. Rubber coupling
B. Vent/flue pipe
C. Induced draft blower

Alternate Combustion Air Intake Location

The alternate combustion air intake location consists of a large, unobstructed hole (alternate vent connection is aligned with the induced draft blower). To use the alternate combustion air intake location, refer to the following steps and the "Alternate Combustion Air Intake Location" illustration.

1. Remove and save the 4 screws securing the combustion air intake coupling to the base pan.
2. Remove the 3 screws securing the furnace's internal combustion air intake pipe to the induced draft blower deck.
3. Remove the combustion air intake pipe from the furnace and cut the pipe at the base pan coupling.
4. Save the base pan coupling and gasket from the induced draft blower deck coupling for use in the alternate location. Discard the remaining pipe.
5. Remove the plastic plug from the alternate combustion air intake location.
6. Relocate and install the plastic plug in the standard air intake location (base pan).
7. Insert the plastic plug (included in the drain kit bag) into the remaining hole in the induced draft blower deck.
8. With the gasket facing the cabinet side panel and the flange's flat spot facing forward, secure the combustion air intake coupling to the cabinet using the screws removed in Step 1 or with field-supplied ⅜" #8 self-drilling screws.

CAUTION

Be sure not to damage internal wiring or other components when reinstalling coupling and screws.

9. For nondirect vent installations installed horizontally, a minimum of one 90° elbow should be installed on the combustion air intake coupling to guard against inadvertent blockage.

   NOTE: No elbow is required on the alternate combustion air intake of upright installations, however, a minimum clearance of 2" (5.1 cm) is required to assure proper air supply.
10. For direct vent installations, secure field-supplied combustion air intake pipe directly to the air intake coupling.

    NOTE: A PVC coupling or elbow is required on counterflow furnaces.

Alternate Combustion Air Intake Location—Counterflow

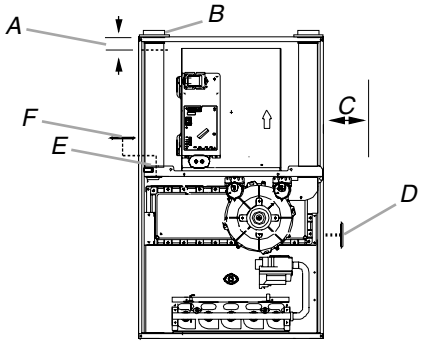

A. Section of pipe to be cut.
B. Screw locations (4)
C. 2" (5.1 cm) minimum
D. Plastic plug—alternate combustion air intake location
E. Screw locations (3)
F. Plastic plug from drain kit bag

Nondirect Vent (Single Pipe) Piping

Nondirect vent installations require only a vent/flue pipe. The vent pipe can be run horizontally with an exit through the side of the building or run vertically with an exit through the roof of the building. The vent can also be run through an existing unused chimney; however, it must extend a minimum of 12" (30.5 cm) above the top of the chimney. The space between the vent pipe and the chimney must be closed with a weather-tight, corrosion-resistant flashing. For details concerning connection of the vent/flue pipe to the furnace, refer to "Vent Pipe Installation and Combustion Air—Standard Furnace Connections" or "Vent Pipe Installation and Combustion Air—Alternate Furnace Connections" for specific details.

Refer to the following "Nondirect Vent (Single Pipe) Piping—Vent/Flue Pipe Terminations" for specific details on termination construction.

Although nondirect vent installations do not require a combustion air intake pipe, a minimum of one 90° elbow should be attached to the furnace's combustion air intake if an upright installation uses the standard intake location, or a horizontal installation uses the alternate air intake location. This elbow will guard against inadvertent blockage of the air intake.

Nondirect Vent Applications

Refer to the following tables for applicable length, elbows and pipe diameter for construction of the vent/flue pipe systems of a nondirect vent (single pipe) installation. In addition to the vent/flue pipe, a single 90° elbow should be secured to the combustion air intake to prevent inadvertent blockage. The tee used in the vent/flue termination must be included when determining the number of elbows in the piping system.

Upflow

Nondirect Vent (Single Pipe) Maximum Allowable Length of Vent/Flue Pipe—ft (m)

		Number of Elbows							
Unit Input (Btu)	**Pipe—in. (cm)**	**1**	**2**	**3**	**4**	**5**	**6**	**7**	**8**
45,000	2 or 2½ (5.12 or 6.4)	71 (21.6)	68 (20.7)	65 (19.8)	62 (18.9)	59 (18)	56 (17.1)	53 (16.2)	50 (15.2)
70,000	2 or 2½ (5.12 or 6.4)	49 (14.9)	46 (14)	43 (13.1)	40 (12.2)	37 (11.3)	34 (10.4)	31 (9.5)	28 (8.5)
	3 (7.6)	71 (21.6)	68 (20.7)	65 (19.8)	62 (18.9)	59 (18)	56 (17.1)	53 (16.2)	50 (15.2)
90,000	3 (7.6)	71 (21.6)	68 (20.7)	65 (19.8)	62 (18.9)	59 (18)	56 (17.1)	53 (16.2)	50 (15.2)
115,000	3 (7.6)	49 (14.9)	46 (14)	43 (13.1)	40 (12.2)	37 (11.3)	34 (10.4)	31 (9.5)	28 (8.5)

Counterflow

Direct Vent (Dual Pipe) Maximum Allowable Length of Vent/Flue Pipe—ft (m)

		Number of Elbows							
Unit Input (Btu)	**Pipe—in. (cm)**	**1**	**2**	**3**	**4**	**5**	**6**	**7**	**8**
70,000	2 or 2½ (5.12 or 6.4)	61 (18.6)	58 (17.7)	55 (16.8)	52 (15.8)	49 (14.9)	46 (14)	43 (13.1)	40 (12.2)
	3 (7.6)	71 (21.6)	68 (20.7)	65 (19.8)	62 (18.9)	59 (18)	56 (17.1)	53 (16.2)	50 (15.2)
90,000	2 or 2½ (5.12 or 6.4)	61 (18.6)	58 (17.7)	55 (16.8)	52 (15.8)	49 (14.9)	46 (14)	43 (13.1)	40 (12.2)
	3 (7.6)	71 (21.6)	68 (20.7)	65 (19.8)	62 (18.9)	59 (18)	56 (17.1)	53 (16.2)	50 (15.2)

NOTES:

- One 90° elbow should be secured to the combustion air intake connection.
- Minimum requirement for each vent/flue pipe is 5 ft (1.5 m) and 1 elbow/tee.
- Tee used in the vent/flue termination must be included when determining the number of elbows in the piping system.
- 2½" or 3" (6.4 cm or 7.6 cm) diameter pipe can be used in place of 2" (5.1 cm) diameter pipe.
- Increased clearance configurations using two 45° long-sweep elbows should be considered equivalent to one 90° elbow.

Vent/Flue Pipe Terminations

- The vent/flue pipe may terminate vertically, as through a roof, or horizontally, as through an outside wall.
- Vertical vent/flue pipe terminations should be as shown in "Vertical Vent Termination (Single Pipe)" illustration. Refer to "Termination Locations" in this section for details concerning location restrictions.
- The penetration of the vent through the roof must be sealed tight with proper flashing such as is used with a plastic plumbing vent.
- Horizontal vent/flue pipe terminations should be as shown in "Horizontal Vent Termination (Single Pipe)" illustration. Refer to "Termination Locations" in this section for details concerning location restrictions.
- A 2⅜" (6.1 cm) diameter wall penetration is required for 2" (5.1 cm) diameter pipe.
- A 3" (7.6 cm) diameter hole is required for a 2½" (6.4 cm) pipe.
- A 3½" (8.9 cm) diameter hole is required for 3" (7.6 cm) diameter pipe.
- To secure the pipe passing through the wall and prohibit damage to the piping connections, a coupling should be installed on either side of the wall and solvent cemented to a length of pipe connecting the 2 couplings.
- The length of pipe should be the wall thickness plus the depth of the socket fittings to be installed on the inside and outside of the wall.
- The wall penetration should be sealed with silicone caulking material.
- In a basement installation, the vent/flue pipe can be run between joist spaces.

  NOTE: If the vent pipe must go below a joist and then up into the last joist space to penetrate the header, two 45° elbows should be used to reach the header rather than two 90° elbows.

Vertical Vent Termination (Single Pipe)

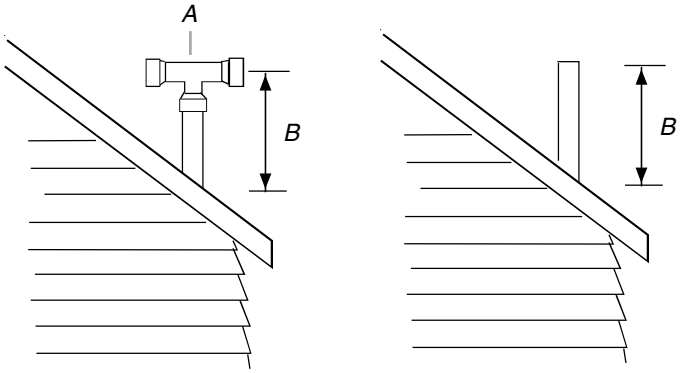

A. Tee (optional)
B. 12" (30.5 cm) minimum to roof or highest anticipated snow level

Alternate Vertical Vent Termination (Single Pipe)

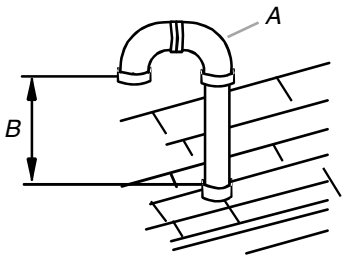

A. 90º medium radius elbows
B. 12" (30.5 cm) minimum to roof or highest anticipated snow level

Standard Horizontal Vent Termination (Single Pipe)

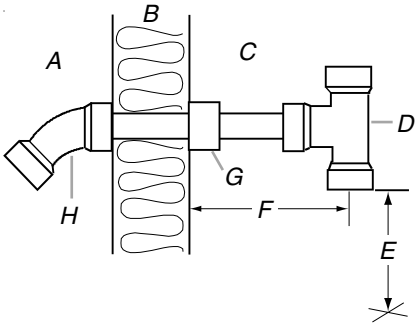

A. Inside building
B. Wall
C. Outside building
D. Tee or 90º elbow turned down
E. 12" (30.5 cm) minimum to roof or highest anticipated snow level
F. 12" (30.5 cm) minimum from wall
G. Coupling
H. Elbow or coupling

Standard Horizontal Vent Termination (Single Pipe)— Above Highest Anticipated Snow Level

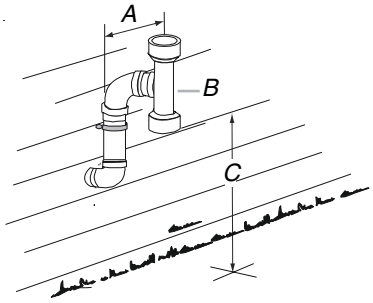

A. 12" (30.5 cm) minimum from wall
B. Tee or 90º elbow turned down
C. 12" (30.5 cm) minimum to roof or highest anticipated snow level

Direct Vent (Dual Pipe) Piping

The inlet air screens provided in the installation instruction packet are available for the installer to use in the inlet of the combustion air pipe to prevent animals from building nests in the combustion air pipe. Installation of screens, while strongly recommended, is not required and will not affect performance of the furnace.

Direct vent installations require both a combustion air intake and a vent/flue pipe. The pipes may be run horizontally and exit through the side of the building or run vertically and exit through the roof of the building. The pipes may be run through an existing unused chimney; however, they must extend a minimum of 12" (30.5 cm) above the top of the chimney. The space between the pipes and the chimney must be closed with a weathertight, corrosion resistant flashing. Both the combustion air intake and vent/flue pipe terminations must be in the same atmospheric pressure zone. See “Termination Locations,” or “Concentric Vent Termination” in this section for specific details on termination constructions. For details concerning connection of pipes to the furnace, refer to the “Standard Furnace Connections” or “Alternate Furnace Connections” in this section.

Vent/Flue and Combustion Air Pipe Lengths and Diameters

Refer to the following table for applicable length, elbows and pipe diameter for construction of the vent/flue and combustion air intake pipe systems of a direct vent (dual pipe) installation. The number of elbows tabulated represents the number of elbows and/or tees in each vent/flue and combustion air intake pipe. Elbows and/or tees used in the terminations must be included when determining the number of elbows in the piping systems.

If the combustion air intake pipe is to be installed above a finished ceiling or other area where dripping of condensate will be objectionable, insulation of the combustion air pipe may be required. Use ½" (1.3 cm) thick closed-cell foam insulation where required.

Vent/Flue and Combustion Air Pipe Terminations

The vent/flue and combustion air pipes may terminate vertically, as through a roof, or horizontally, as through an outside wall.

Upflow

Direct Vent (Dual Pipe) Maximum Allowable Length of Vent/Flue and Combustion Air Intake Pipe—ft (m)

Unit Input (Btu)	Termination Style	Pipe—in. (cm)	Number of Elbows 1	2	3	4	5	6	7	8
45,000	Standard	2 or 2½ (5.12 or 6.4)	71 (21.6)	68 (20.7)	65 (19.8)	62 (18.9)	59 (18)	56 (17.1)	53 (16.2)	50 (15.2)
	Alternate	2 or 2½ (5.12 or 6.4)	58 (17.7)	55 (16.8)	52 (15.8)	49 (14.9)	46 (14)	43 (13.1)	40 (12.2)	37 (11.3)
70,000	Standard	2 or 2½ (5.12 or 6.4)	49 (14.9)	46 (14)	43 (13.1)	40 (12.2)	37 (11.3)	34 (10.4)	31 (9.5)	28 (8.5)
		3 (7.6)	71 (21.6)	68 (20.7)	65 (19.8)	62 (18.9)	59 (18)	56 (17.1)	53 (16.2)	50 (15.2)
	Alternate	2 or 2½ (5.12 or 6.4)	36 (11)	33 (10.1)	30 (9.2)	27 (8.2)	24 (7.3)	21(6.4)	18 (5.5)	15 (4.6)
		3 (7.6)	57 (17.4)	54 (16.5)	51 (15.5)	48 (14.6)	45 (13.7)	42 (12.8)	39 (11.9)	36 (11)
90,000	Standard	3 (7.6)	71 (21.6)	68 (20.7)	65 (19.8)	62 (18.9)	59 (18)	56 (17.1)	53 (16.2)	50 (15.2)
	Alternate	3 (7.6)	57 (17.4)	54 (16.5)	51 (15.5)	48 (14.6)	45 (13.7)	42 (12.8)	39 (11.9)	36 (11)
115,000	Standard	3 (7.6)	49 (14.9)	46 (14)	43 (13.1)	40 (12.2)	37 (11.3)	34 (10.4)	31 (9.5)	28 (8.5)
	Alternate	3 (7.6)	35 (10.7)	32 (9.8)	29 (8.8)	26 (7.9)	23 (7)	20 (6.1)	17 (5.2)	14 (4.3)

Counterflow

Direct Vent (Dual Pipe) Maximum Allowable Length of Vent/Flue and Combustion Air Intake Pipe—ft (m)

Unit Input (Btu)	Termination Style	Pipe—in. (cm)	Number of Elbows 1	2	3	4	5	6	7	8
70,000	Standard	2 or 2½ (5.12 or 6.4)	49 (14.9)	46 (14)	43 (13.1)	40 (12.2)	37 (11.3)	34 (10.4)	31 (9.5)	28 (8.5)
		3 (7.6)	71 (21.6)	68 (20.7)	65 (19.8)	62 (18.9)	59 (18)	56 (17.1)	53 (16.2)	50 (15.2)
	Alternate	2 or 2½ (5.12 or 6.4)	36 (11)	33 (10.1)	30 (9.2)	27 (8.2)	24 (7.3)	21(6.4)	18 (5.5)	15 (4.6)
		3 (7.6)	57 (17.4)	54 (16.5)	51 (15.5)	48 (14.6)	45 (13.7)	42 (12.8)	39 (11.9)	36 (11)
90,000	Standard	2 or 2½ (5.12 or 6.4)	61 (18.6)	58 (17.7)	55 (16.8)	52 (15.8)	49 (14.9)	46 (14)	43 (13.1)	40 (12.2)
		3 (7.6)	71 (21.6)	68 (20.7)	65 (19.8)	62 (18.9)	59 (18)	56 (17.1)	53 (16.2)	50 (15.2)
	Alternate	2 or 2½ (5.12 or 6.4)	48 (14.6)	45 (13.7)	42 (12.8)	39 (11.9)	36 (11)	33 (10.1)	30 (9.2)	27 (8.2)
		3 (7.6)	57 (17.4)	54 (16.5)	51 (15.5)	48 (14.6)	45 (13.7)	42 (12.8)	39 (11.9)	36 (11)

NOTES:

- Maximum allowable limits listed are individual lengths for inlet and flue and not a combination.
- Elbows and/or tees used in the terminations must be included when determining the number of elbows in the piping system.
- Number of elbows tabulated are for each vent/flue and combustion air intake pipe.
- Minimum length of each vent/flue and combustion air intake pipe is 5 ft (1.5 m) and one elbow/tee.
- 2½" (6.4 cm) or 3" (7.6 cm) diameter pipe can be used in place of 2" (5.1 cm) diameter pipe.
- Increased clearance configurations using two 45° long-sweep elbows should be considered equivalent to one 90° elbow.

Vertical pipe terminations should be as shown in “Vertical Terminations (Dual Pipe)” illustration. Refer to “Termination Locations” in this section for details concerning location restrictions. The penetrations through the roof must be sealed tight with the proper flashing such as is used with a plastic plumbing vent.

Vertical Vent Terminations (Dual Pipe)

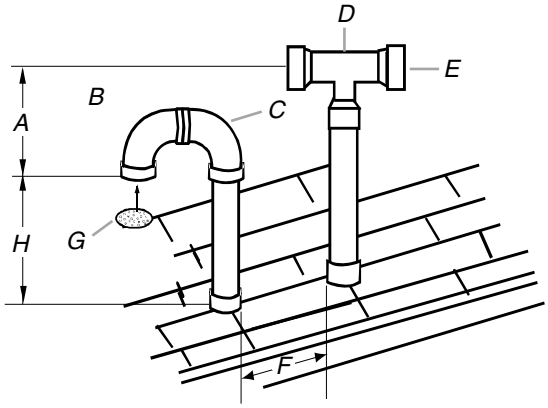

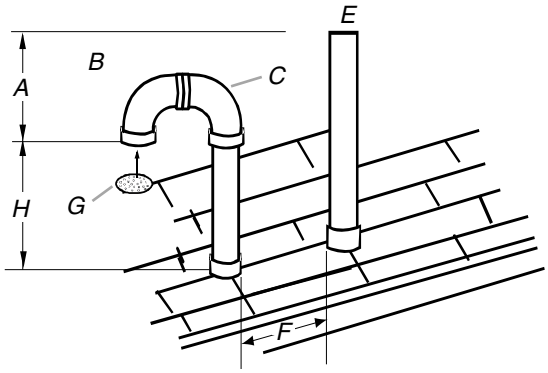

A. 12" (30.5 cm) minimum
B. Combustion air intake pipe
C. 90° medium radius elbows
D. Tee
E. Vent/flue pipe
F. 24" (61 cm) maximum, 3" (7.6 cm) minimum
G. Screen
H. 12" (30.5 cm) minimum to roof or highest anticipated snow level

Horizontal terminations should be as shown in "Standard Horizontal Vent Terminations (Dual Pipe)" illustration. Refer to "Termination Locations" in this section for location restrictions.

- A 2⅜" (6.1 cm) diameter wall penetration is required for 2" (5.1 cm) diameter pipe.
- A 3" (7.6 cm) diameter hole is required for a 2½" (6.4 cm) pipe.
- A 3½" (8.9 cm) diameter hole is required for 3" (7.6 cm) diameter pipe.
- To secure the pipe passing through the wall and prohibit damage to the piping connections, a coupling should be installed on either side of the wall and solvent cemented to a length of pipe connecting the 2 couplings.
- The length of pipe should be the wall thickness plus the depth of the socket fittings to be installed on the inside and outside of the wall.
- The wall penetration should be sealed with silicone caulking material.

Standard Horizontal Vent Terminations (Dual Pipe)

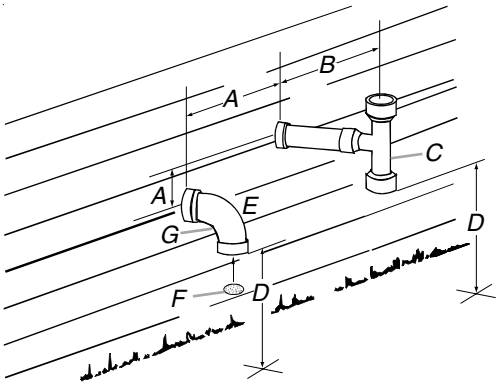

A. 24" (61 cm) maximum, 3" (7.6 cm) minimum
B. 12" (30.5 cm) minimum from wall
C. Tee or 90° elbow turned down
D. 12" (30.5 cm) minimum to roof or highest anticipated snow level
E. Combustion air intake
F. Screen
G. 90° medium radius elbow

Alternate Horizontal Vent Terminations (Dual Pipe)

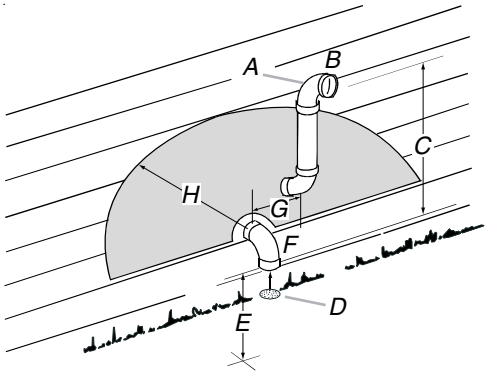

A. 90° medium radius elbow
B. Flue/vent pipe
C. 12" (30.5 cm) minimum from wall
D. Screen
E. 12" (30.5 cm) minimum to roof or highest anticipated snow level
F. Combustion air intake
G. 24" (61 cm) maximum, 3" (7.6 cm) minimum
H. 24" (61 cm) maximum radius

Standard Horizontal Terminations (Dual Pipe)—Above Highest Anticipated Snow Level

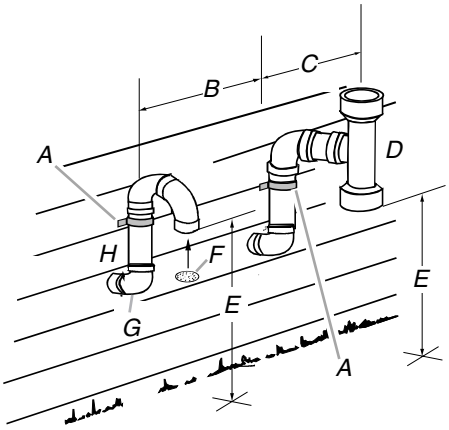

A. Support straps
B. 24" (61 cm) maximum, 3" (7.6 cm) minimum
C. 12" (30.5 cm) minimum from wall
D. Tee or 90° elbow turned down
E. 12" (30.5 cm) minimum to roof or highest anticipated snow level
F. Screen
G. 90° medium radius elbow
H. Combustion air intake

Alternate Horizontal Terminations (Dual Pipe)—Above Highest Anticipated Snow Level

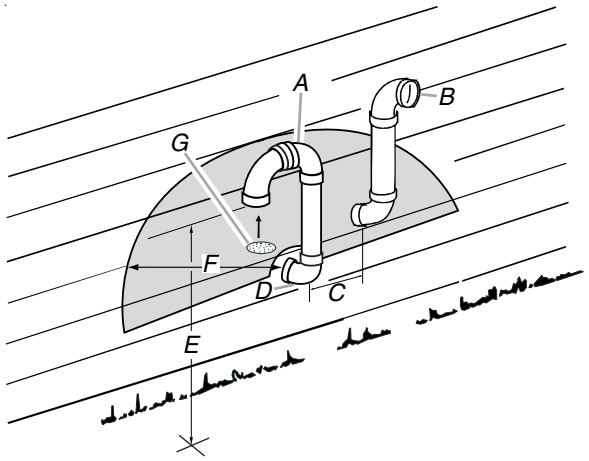

A. 90° medium radius elbow
B. Flue/vent pipe
C. 24" (61 cm) maximum, 3" (7.6 cm)
D. Combustion air intake
E. 12" (30.5 cm) minimum to roof or highest anticipated snow level
F. 24" (61 cm) maximum radius
G. Screen

- In a basement installation, the vent/flue pipe can be run between joist spaces.

  NOTE: If the vent pipe must go below a joist and then up into the last joist space to penetrate the header, two 45° elbows should be used to reach the header rather than two 90° elbows.

Vent/Intake Terminations for Installation of Multiple Direct Vent Furnaces

If more than one direct vent furnace is to be installed vertically through a common roof top, maintain the same minimum clearances between the exhaust vent and air intake terminations of adjacent furnaces as with the exhaust vent and air intake terminations of a single furnace.

If more than one direct vent furnace is to be installed horizontally through a common side wall, maintain the clearances as shown in “Horizontal Venting of Multiple Furnaces” illustration. Always terminate all exhaust vent outlets at the same elevation and always terminate all air intakes at the same elevation.

Horizontal Venting of Multiple Furnaces

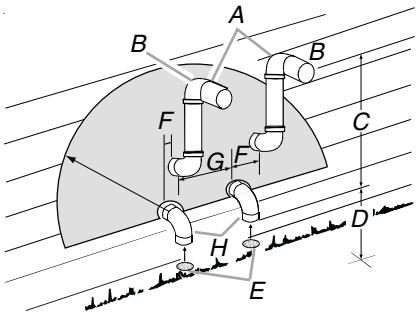

A. 90° medium radius elbows
B. Flue/vent pipes
C. 12" (30.5 cm) minimum
D. 12" (30.5 cm) minimum to roof or highest anticipated snow level
E. Screens
F. 24" (61 cm) maximum, 3" (7.6 cm) minimum
G. 3" (7.6 cm) minimum
H. Combustion air intakes

Concentric Vent Termination

Refer to the directions provided with the Concentric Vent Kit (DCVK) for installation specifications.

Side Wall Vent Kit

This kit is to be used with 2" or 3" (5.1 cm or 7.6 cm) direct vent systems. The vent kit must terminate outside the structure and may be installed with the intake and exhaust pipes located side-by-side or with one pipe above the other.

NOTE: This kit is not intended for use with single pipe (nondirect vent) installations.

Refer to the directions furnished with the Side Wall Vent Kit (Part Number 0170K00000S) for installation specifications

CONDENSATE DRAIN LINES AND DRAIN TRAP

A condensing gas furnace achieves its high level of efficiency by extracting almost all of the heat from the products of combustion and cooling them to the point where condensation takes place. The condensate which is generated must be piped to an appropriate drain location.

In upright installations, the furnace’s drain hoses may exit either the right or left side of the furnace.

NOTE: If the alternate vent/flue outlet is utilized in an upright installation, the drain trap and drain connections must be located on the same side as the alternate vent/flue outlet.

In horizontal installations, the drain hoses will exit through the bottom (down side) of the furnace with the drain trap suspended beneath the furnace. The field-supplied drain system must be in accordance with all local codes and the instructions in the following sections.

Follow the bullets listed below when installing the drain system. Refer to the following sections for specific details concerning furnace drain trap installation and drain hose hookups.

NOTES:

- The drain trap supplied with the furnace must be used.
- The drain line between the furnace and drain location must be constructed of ¾" (1.9 cm) PVC or CPVC.
- The drain line between the furnace and drain location must maintain a ¼" (6.4 mm) per foot downward slope toward the drain.
- Do not trap the drain line in any other location than at the drain trap supplied with the furnace.
- Do not route the drain line outside where it may freeze.
- If the drain line is routed through an area which may see temperatures near or below freezing, precautions must be taken to prevent the condensate from freezing within the drain line.
- If an air conditioning coil is installed with the furnace, a common drain may be used. An open tee must be installed in the drain line near the cooling coil to relieve positive air pressure from the coil’s plenum. This is necessary to prohibit any interference with the function of the furnace’s drain trap.

Standard Right or Left Side Drain Hose Connections

All installation positions require the use of the drain trap, hoses, tubes and clamps. The following quantity of hoses, tubes, and hose clamps are provided with the unit.

Hose and Tube Identification

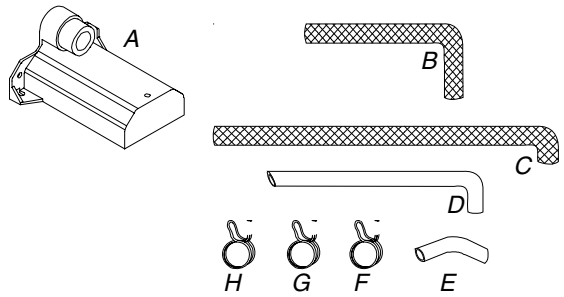

A. Drain trap
B. Hose A
C. Hose B
D. Tube 2 (2)
E. Tube 1
F. Red hose clamp (1)
G. Silver hose clamp (1)
H. Green hose clamps (3)

Upright Installations—Trap on Right Side

In an upright installation, drain hoses are connected to drain ports on the rubber elbow and the recuperator coil front cover. The drain lines are then routed through the right side panel and into the drain trap secured to the outside of the cabinet.

NOTE: Refer to “Alternate Vent/Flue Hose Connections” for upright installations using an alternate vent/flue outlet,

1. Remove the rubber plug/cap from the right side of the front cover drain port.
2. Secure Hose A to the front cover drain port with a red hose clamp.
3. Route Hose A to the rear side panel grommet hole.
4. Cut and remove ¼" (6.4 mm) from the end of the drain port on the rubber elbow.
5. Insert Tube 1 into the rubber elbow drain port and secure with the silver hose clamp. Angle Tube 1 outward toward the front of the furnace.
6. Cut 17¾" (45.1 cm) from the long end of Hose B and discard.
7. Secure the remaining Hose B to Tube 1 with a green hose clamp.
8. Route the other end of Hose B to the front right side panel grommet hole.

NOTE: For details concerning the mounting of the drain trap, refer to “Upright Drain Trap Mounting.”

9. Insert the short end of each Tube 2 through the side panel grommet holes.
10. Secure the tubes to Hose A and Hose B with the green hose clamps.

    NOTE: Ensure hoses and tubes maintain a downward slope for proper drainage and that they are not kinked or binding.

Upright Standard Connections—Right Side Upflow (Counterflow Similar)

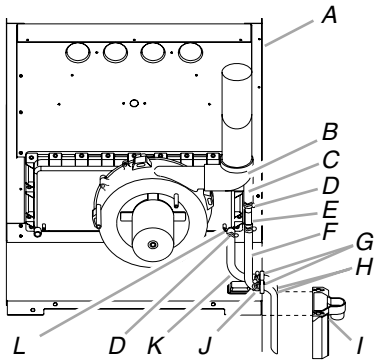

A. Right side panel
B. Rubber elbow
C. Rubber elbow drain port
D. Red hose clamps
E. Tube 1
F. Hose B
G. Side panel grommet holes
H. Tubes 2
I. Drain trap
J. Green hose clamps (3)
K. Hose A
L. Front cover drain port

Alternate Vent/Flue Drain Hose Connections

Upright installations using the alternate vent/flue outlet will require right side only drain hoses to be connected as follows. Refer to “Vent/Flue Pipe and Combustion Air Pipe” for details on alternate vent/flue pipe connection.

1. Remove the rubber plug/cap from the right-side drain port on the front cover. Save the rubber plug/cap for later use.
2. Secure Hose A to the drain port on the front cover with a red hose clamp.
3. Route Hose A to the rear right side panel grommet hole.
4. Remove the grommet from the front right side panel drain hole.
5. Seal the hole in the grommet with the large end of the rubber plug removed in Step 1.
6. Reinstall the grommet and rubber plug into the side panel drain hole.
7. Cut ¼" (6.4 mm) from the end of the drain port on the externally mounted rubber elbow. Discard cut portion.
8. Insert Tube 1 into the rubber elbow drain port and secure with a silver hose clamp.

   NOTE: Angle tube toward drain trap.
9. Cut 17⅞" (45.4 cm) from the long end of Hose B. Discard cut portion.
10. Secure the remaining end of Hose B to the exposed end of Tube 1 with a green hose clamp.
11. Route Hose B toward the right side panel grommet holes.
12. Insert the short end of one Tube 2 through the rear right side panel grommet drain hole.
13. Secure Tube 2 to Hose A with a green hose clamp.
14. Insert the short end of the remaining Tube 2 into Hose B from the rubber elbow and secure with a green hose clamp.
15. Ensure that the hoses and tubes maintain a downward slope for proper drainage and are not kinked or binding.

Alternate Upright Upflow Connections—Right Side Only (Counterflow Similar)

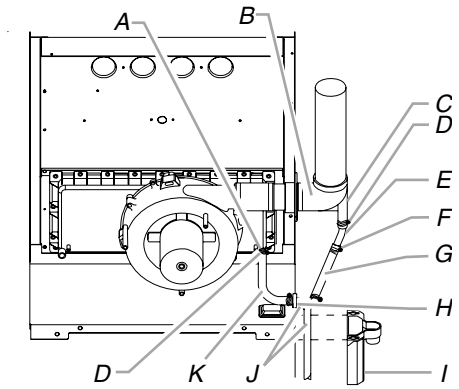

A. Front cover drain port
B. Rubber elbow (externally mounted)
C. Rubber elbow drain port
D. Silver hose clamp
E. Tube 1
F. Green hose clamps (3)
G. Hose B
H. Side panel grommet holes
I. Drain trap
J. Tubes 2
K. Hose A
L. Red hose clamp

Upright Installations—Trap on Left Side

NOTE: For left side trap installation, grommets must be moved to the left side of the furnace and the plugs installed on the right side of the furnace.

1. Remove the rubber plug/cap from the left side of the front cover drain port.
2. Secure Hose A to the front cover drain port with a red hose clamp.
3. Route Hose A to the rear side panel grommet hole.
4. Cut and remove ¼" (6.4 mm) from the end of the drain port on the rubber elbow.
5. Insert Tube 1 into the rubber elbow drain port and secure with the silver hose clamp. Angle Tube 1 outward toward the front of the furnace.
6. Cut “x" from the long end of Hose B and discard. Refer to the following table for the appropriate length to cut.
7. Secure the remaining Hose B to Tube 1 with a green hose clamp.
8. Route the other end of Hose B to the front left side panel grommet hole.

NOTE: Long Hose B must always be connected to Tube 1 and the elbow and not on the front cover.

9. Insert the short end of each Tube 2 through the side panel grommet holes.
10. Secure the tubes to Hose A and Hose B with the green hose clamps.

    NOTE: Ensure hoses and tubes maintain a downward slope for proper drainage and that they are not kinked or binding.

Upright Standard Connections—Left Side Upflow (Counterflow Similar)

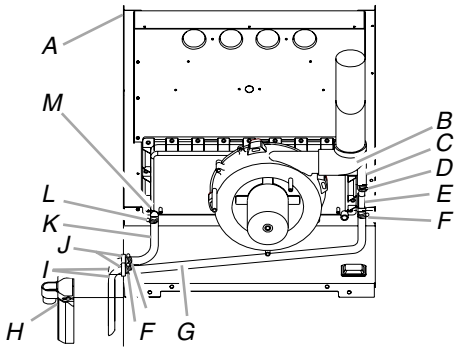

A. Left side panel
B. Rubber elbow
C. Rubber elbow drain port
D. Silver hose clamp
E. Tube 1
F. Green hose clamps (3)
G. Hose B
H. Drain trap
I. Tubes 2
J. Side panel drain holes
K. Hose A
L. Red hose clamp
M. Front cover drain port

Cabinet Width—in. (cm)	Models (kBtu/Tons)	X Length to Cut from Long End of Hose B
17½" (44.5 cm)	45_30	7" (17.8 cm)
21" (53.4 cm)	70_40	3½" (8.9 cm)
24½" (62.3 cm)	090_50	None
	115_50	

Upright Drain Trap Mounting—Left or Right Side Panel

1. Insert the drain tubes into the drain trap and position the drain trap against the side panel.

   NOTE: Drain tubes must reach the bottom of the drain trap.
2. Secure the drain trap to the side panel at the mounting holes (dimples or crosshairs on counterflow models) located below the grommet drain holes.
3. Attach the PVC drain line to the drain trap outlet with either a 90° elbow or coupling.

Horizontal Installations—Right Side Down

Horizontal installations with the right side down require that the drain hoses be connected to the right side front cover drain port and the rubber elbow drain port.

NOTE: On counterflow models, relocation of the front cover pressure switch hose is required.

Make connections as follows:

1. Remove the rubber plug/cap from the right side of the front cover drain port.

   NOTE: On counterflow furnaces, relocate the front cover pressure switch hose connection from the left side pressure tap to the right (down) side tap to guard against blocked drain conditions. Cut the hose to appropriate length to minimize sagging. Plug the left (unused) pressure tap with the plug removed from right side.

2. Secure Hose A to the front cover drain tap with a red hose clamp.
3. Route Hose A to the rear right (down) side panel grommet holes.
4. Cut ¼" (6.4 mm) from the end of the drain port on the externally mounted rubber elbow. Discard cut portion.
5. Insert Tube 1 into the rubber elbow drain port and secure with a silver hose clamp.

   NOTE: Angle tube outward toward front of furnace.
6. Cut 17¾" (45.1 cm) from the long end of Hose B. Discard cut portion.
7. Secure the remaining end of Hose B to exposed end of Tube 1 with a green hose clamp.
8. Route Hose B to the front right (down) side panel grommet holes.
9. Cut 5½" (14 cm) straight length from the long end of each Tube 2. Discard the radius pieces.
10. Insert approximately 1" (2.5 cm) of each Tube 2 through the right (down) side panel grommet holes.
11. Secure the tubes to Hose A and Hose B using the green hose clamps.

    NOTE: Ensure that the hoses and tubes maintain a downward slope for proper drainage and are not kinked or bound.

For details concerning the mounting of the drain trap, refer to "Horizontal Drain Trap Mounting" in "Condensate Drain Lines and Drain Trap."

Horizontal Upflow Connections—Right Side Down (Counterflow Similar)

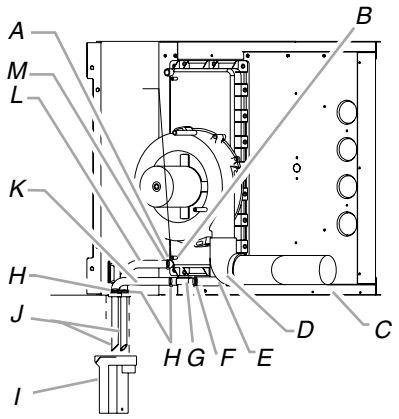

A. Front cover drain port
B. Front cover pressure tap
C. Right side panel
D. Rubber elbow
E. Rubber elbow drain port
F. Silver hose clamp
G. Tube 1
H. Green hose clamps (3)
I. Drain trap
J. Tubes 2
K. Hose B
L. Hose A
M. Red hose clamp

Horizontal Installations—Left Side Down

Horizontal installations with the left side panel down will require the drain hoses to be connected to the left side front cover drain port and the side drain port on the rubber elbow.

1. Remove the rubber plug/cap from the front cover left (down) side drain port.
2. Relocate the front cover pressure switch hose connection from the right side (as shipped) pressure tap to the left (down) side tap.

   NOTE: The pressure switch hose must be connected to the down side to guard against blocked drain conditions. Cut the hose to the appropriate length to minimize sagging. Plug the right (unused) pressure tap with the rubber plug removed from the left side.
3. Secure Hose A to the front cover drain port with a red hose clamp.
4. Route Hose A to the rear left (down) side panel grommet holes.

   NOTE: For left side drainage, grommets must be relocated to the left side panel.
5. Remove the rubber cap from the side drain port on the rubber elbow.
6. Secure the short end of Hose B to the rubber elbow side drain port using a green hose clamp.

   NOTES:
   - For left side drainage, route Hose B to the far left (down) side panel grommet holes.
   - Horizontal left side connections (when using a new side port drain elbow) does not require connecting a hose to the induced draft blower housing.
7. Cut 5½" (14 cm) straight length from the long end of each Tube 2. Discard radius ends.
8. Insert approximately 1" (2.5 cm) of each Tube 2 through the left side panel grommet hole.
9. Secure the tubes to Hose A and Hose B with the green hose clamps.

   NOTE: Tube must reach bottom of trap.

NOTE: Ensure that the hoses and tubes maintain a downward slope for proper drainage and are not kinked or bound.

For details concerning the mounting of the drain trap, refer to "Horizontal Drain Trap Mounting" in this section.

Horizontal Upflow Connections—Left Side Down (Counterflow Similar)

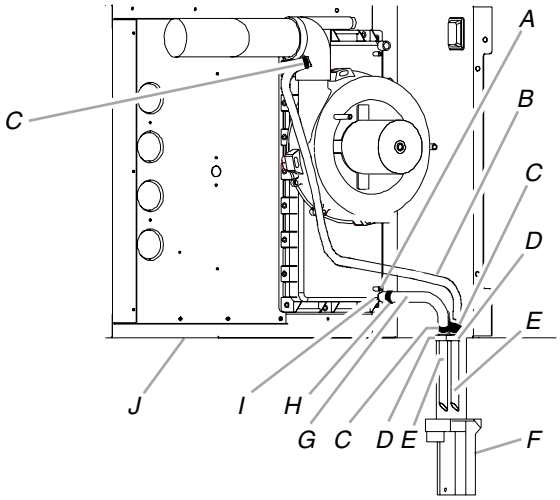

A. Induced draft blower drain port
B. Hose B
C. Green hose clamps (3)
D. Side panel grommet holes
E. Tubes 2
F. Drain trap
G. Hose A
H. Red hose clamps
I. Front cover drain port
J. Left side panel

Horizontal Drain Trap Mounting— Left or Right Side Panel

1. Position the drain trap against the side panel with the drain tubes inserted into the trap.

   NOTE: The trap may be orientated with the outlet facing either the furnace's top cover or base pan.
2. Secure the drain trap to the side panel at the dimples or crosshairs located on either side of the grommet drain holes.
3. Confirm that the tubes reach the bottom of the drain trap and that all of the hoses maintain a downward slope and are not kinked or binding.
4. Attach the PVC drain line to the drain trap outlet with either a 90° elbow or coupling.

ELECTRICAL CONNECTIONS

WARNING

HIGH VOLTAGE!

To avoid the risk of electrical shock, wiring to the unit must be polarized and grounded.

WARNING

HIGH VOLTAGE!

To avoid personal injury or death due to electrical shock, disconnect electrical power before servicing or changing any electrical wiring.

CAUTION

Label all wires prior to disconnection when servicing controls. Wiring errors can cause improper and dangerous operation. Verify proper operation after servicing.

Wiring Harness

The wiring harness is an integral part of this furnace. Field alteration to comply with electrical codes should not be required. Wires are color coded for identification purposes. Refer to the wiring diagram for wire routings. If any of the original wire as supplied with the furnace must be replaced, it must be replaced with wiring material having a temperature rating of at least 105°C. Any replacement wiring must be a copper conductor.

115-Volt Line Connections

Before proceeding with electrical connections, ensure that the supply voltage, frequency and phase correspond to that specified on the unit rating plate. Power supply to the furnace must be NEC Class 1, and must comply with all applicable codes. The furnace must be electrically grounded in accordance with local codes or, in their absence, with the latest edition of The National Electric Code, ANSI NFPA 70 and/or The Canadian Electric Code CSA C22.1.

Use a separate fused-branch electrical circuit containing properly sized wire, and fuse or circuit breaker. The fuse or circuit breaker must be sized in accordance with the maximum overcurrent protection specified on the unit rating plate. An electrical disconnect must be provided at the furnace location.

NOTE: Line polarity must be observed when making field connections.

Connect hot, neutral and ground wires as shown in the wiring diagram located on the unit's blower door. For direct vent applications, the cabinet opening to the junction box must be sealed airtight using either an UL Listed/CSA approved bushing such as Heyco Liquid Tight or by applying non-reactive UL Listed/CSA approved sealant to bushing.

Line polarity must be observed when making field connections. Line voltage connections can be made through either the right or left side panel. The furnace is shipped configured for a right side (left side for counterflows) electrical connection with the junction box located inside the burner compartment.

To make electrical connections through the opposite side of the furnace, the junction box must be relocated to the other side of the burner compartment prior to making electrical connections. To relocate the junction box, follow the steps shown in "Junction Box Relocation."

NOTE: Wire routing must not to interfere with circulator blower operation, filter removal or routine maintenance.

Junction Box Relocation

WARNING

Edges of sheet metal holes may be sharp. Use gloves as a precaution when removing hole plugs.

WARNING

To prevent personal injury or death due to electric shock, disconnect electrical power before installing or servicing this unit.

WARNING

HIGH VOLTAGE!

To avoid the risk of injury, electrical shock or death, the furnace must be electrically grounded in accordance with local codes or in their absence, with the latest edition of the National Electric Code (NEC).

Line voltage connections can be made through either the right or left side panel. The furnace is shipped configured for a right side electrical connection. To make electrical connections through the opposite side of the furnace, the junction box must be relocated to the left side prior to making electrical connections. To relocate the junction box, perform the following steps.

1. Remove the burner compartment door.
2. Remove and save the 2 screws securing the junction box to the side panel.
3. Relocate junction box and associated plugs and grommets to opposite side panel.
4. Secure with screws removed in Step 2.

⚠ WARNING

To avoid the risk of injury, electrical shock or death, the furnace must be electrically grounded in accordance with local codes or, in their absence, with the latest edition of the National Electric Code (NEC).

To ensure proper unit grounding, the ground wire should run from the furnace ground screw located inside the furnace junction box all the way back to the electrical panel.

NOTE: Do not use gas piping as an electrical ground.

To confirm proper unit grounding, turn off the electrical power and perform the following check.

1. Measure the resistance between the neutral (white) connection and one of the burners.
2. Resistance should measure 10 ohms or less.

This furnace is equipped with a blower door interlock switch which interrupts the unit voltage when the blower door is opened for servicing.

NOTE: Do not defeat this switch.

24-Volt Thermostat Wiring

IMPORTANT NOTE

Wire routing must not interfere with circulator blower operation, filter removal or routine maintenance. A removable plug connector is provided with the control to make thermostat wire connections. This plug may be removed to allow wire connections to be made to the plug and then replaced. It is STRONGLY recommended that multiple wires into a single terminal be twisted together prior to inserting into the plug connector. Failure to do so may result in intermittent operation.

As a 2-stage furnace, the furnace integrated control module provides terminals for both W1 and W2, and Y1 and Y2 thermostat connections. This allows the furnace to support the following system applications: 2-stage heating only, 2-stage heating with single-stage cooling and 2-stage heating with 2-stage cooling. Refer to the following thermostat wiring diagrams for proper connections to the integrated control module.

Low voltage connections can be made through either the right or left side panel. Thermostat wiring entrance holes are located in the blower compartment. The following illustration shows the connections for a heat/cool system.

This furnace is equipped with a 40 VA transformer to facilitate use with most cooling equipment. Consult the wiring diagram located on the blower compartment door for further details of 115-volt and 24-volt wiring.

NOTES:

- For single-stage cooling applications, a jumper may be required between Y1 and Y2 at the furnace control in order to achieve the desired single-stage cooling airflow. Consult the Blower Performance charts to determine if the required single-stage cooling airflow can be delivered at low stage (Y1 input) or high stage (Y2 input). Additionally, use of ramping profile and dehumidification features require a jumper between Y1 and O and Y1 and DEHUM, respectively.
- Thermostat R required if outdoor unit is equipped with a Comfort Alert™ module.

Thermostat Wiring Diagram—Single-Stage Thermostat Application

NOTE: Place jumper between Y1 and O for proper dehumidification operation and proper ramping profile operation.

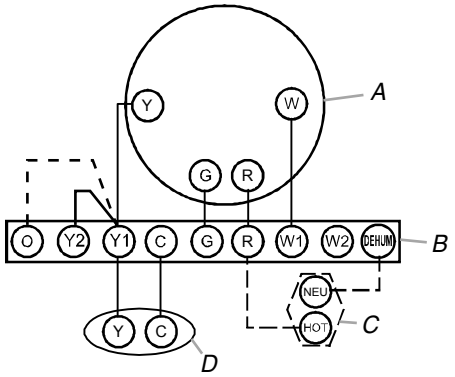

A. Thermostat—single-stage heating and single-stage cooling
B. Furnace integrated control module
C. Dehumidistat (optional)
D. Remote condensing unit (single-stage cooling)

NOTE: To apply a single-stage heating thermostat, the thermostat selector switch on the integrated control module must be set on single-stage.

Thermostat Wiring Diagram—2-Stage Heating with Single-Stage Cooling

NOTE: Place jumper between Y1 and O for proper dehumidification operation and proper ramping profile operation.

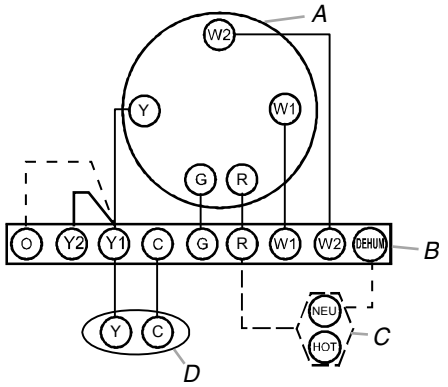

A. Thermostat—2-stage heating and single-stage cooling
B. Furnace integrated control module
C. Dehumidistat (optional)
D. Remote condensing unit (single-stage cooling)

Thermostat Wiring Diagram—2-Stage Heating with 2-Stage Cooling

NOTE: Place jumper between Y1 and O for proper dehumidification operation and proper ramping profile operation.

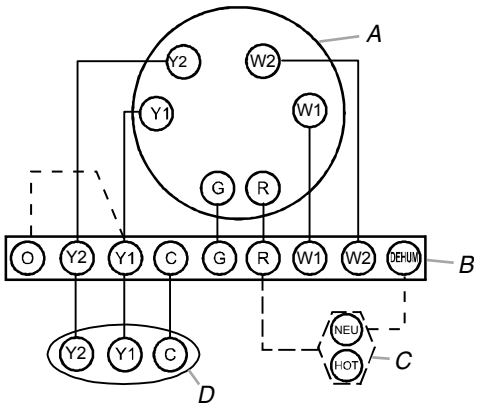

A. Thermostat—2-stage heating and 2-stage cooling
B. Furnace integrated control module
C. Dehumidistat (optional)
D. Remote condensing unit (2-stage cooling)

A single-stage thermostat with only one heating stage may be used to control this furnace. The application of a single-stage thermostat does not offer true thermostat-driven 2-stage operation, but provides a timed transition from low to high fire. The furnace will run on low stage for a fixed period of time before stepping up to high stage to satisfy the thermostat's call for heat. The delay period prior to stepping up can be set at either a fixed 5-minute transition time or a load based variable time between 1 and 12 minutes (Auto transition). If the Auto transition mode is selected, the control averages the cycle times of the previous 3 cycles and uses the average to determine the time to transition from low stage to high stage.

To use a single-stage thermostat:

1. Turn off power to the furnace.
2. Move the thermostat selection DIP switch to the Off (single-stage) position.
3. Set the desired transition time by setting the Stage Delay DIP switch to On for Auto transition, or Off for 5-minute transition time.
4. Turn on power. Refer to the following illustration.

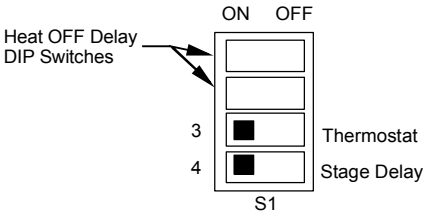

24-Volt Dehumidistat Wiring

The optional usage of a dehumidistat allows the furnace's circulator blower to operate at a slightly lower speed (82% of desired speed) during a combined thermostat call for cooling and dehumidistat call for dehumidification. This can be done through an independent dehumidistat or through a thermostat's DEHUM terminal (if available). This lower blower speed enhances dehumidification of the conditioned air as it passes through the AC coil. For proper function, a dehumidistat applied to this furnace must operate on 24 VAC and utilize a switch which opens on humidity rise.

To install/connect a dehumidistat:

1. Turn off power to furnace.
2. Secure the dehumidistat neutral wire (typically the white lead) to the terminal marked DEHUM on the furnace integrated control module.
3. Secure the dehumidistat hot wire (typically the black lead) to the terminal marked R on the furnace integrated control module.
4. Secure the dehumidistat ground wire (typically the green lead) to the ground screw on the furnace junction box.

   NOTE: Ground wire may not be present on all dehumidistats.
5. Turn on power to furnace.

To enable the dehumidify function on the integrated control module, set the dehumidification DEHUM DIP switch from Off to On.

Once the switch is set, the dehumidify function is enabled during a combination call for cooling (T-Stat) and dehumidification (DEHUM-Stat).

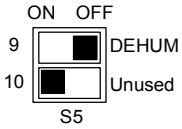

Fossil Fuel Applications

This furnace can be used in conjunction with a heat pump in a fossil fuel application. A fossil fuel application refers to a combined gas furnace and heat pump installation which uses an outdoor temperature sensor to determine the most cost efficient means of heating (heat pump or gas furnace).

A heat pump thermostat with 3 stages of heat is required to properly use a 2-stage furnace in conjunction with a heat pump. Refer to the fossil fuel kit installation instructions for additional thermostat requirements.

Strictly follow the wiring guidelines in the fossil fuel kit installation instructions. All furnace connections must be made to the furnace 2-stage integrated control module and the FURNACE terminal strip on the fossil fuel control board.

115-Volt Line Connection of Accessories (Humidifier and Electronic Air Cleaner)

WARNING

HIGH VOLTAGE!

To avoid personal injury or death due to electrical shock, disconnect electrical power before servicing or changing any electrical wiring.

The furnace integrated control module is equipped with line voltage accessory terminals for controlling power to an optional field-supplied humidifier and/or electronic air cleaner.

The accessory load specifications are as follows:

Humidifier	1.0 Amp maximum at 120 VAC
Electronic Air Cleaner	1.0 Amp maximum at 120 VAC

NOTES:

- Turn off power to the furnace before installing any accessories.
- Follow the humidifier or air cleaner manufacturers' instructions for locating, mounting, grounding and controlling these accessories.
- Accessory wiring connections are to be made through the ¼" quick connect terminals provided on the furnace integrated control module.
- The humidifier and electronic air cleaner hot terminals are identified as HUM and EAC.
- The humidifier and electronic air cleaner neutral terminals are identified as NEUTRAL.
- All field wiring must conform to applicable codes.
- Connections should be made as shown in the "Optional Accessories Wiring" illustration.

Optional Accessories Wiring

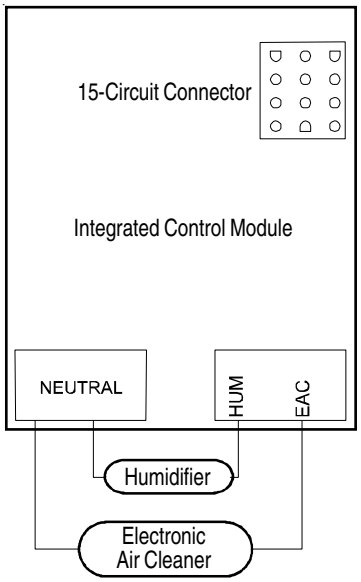

If it is necessary for the installer to supply additional line voltage wiring to the inside of the furnace, the wiring must conform to all local codes, and have a minimum temperature rating of 105°C. All line voltage wire splices must be made inside the furnace junction box.

The integrated control module humidifier terminals (HUM) are energized with 115 volts whenever the induced draft blower is energized. The integrated control module electronic air cleaner terminals (EAC) are energized with 115 volts whenever the circulator blower is energized.

24-Volt Humidifier

A 5" (12.7 cm) long brown wire in the wire harness at the low-fire pressure switch provides 24 VAC humidifier control. This wire is powered any time the pressure switch is closed. To connect 24 VAC HUM, connect the 24 VAC line of the humidifier to the 5" (12.7 cm) brown wire. The connection can be made by either stripping the wire and using a wire connector or by using a field-supplied quick connect terminal. The wiring must conform to all local and national codes. Connect the COM side of the humidifier to the C terminal on the furnace control board (or to the COM side of the 24 VAC transformer).

NOTE: Do not connect 115-volt humidifier to these terminals.

GAS SUPPLY AND PIPING

The furnace rating plate includes the approved furnace gas input rating and gas types. The furnace must be equipped to operate on the type of gas applied. This includes any conversion kits required for alternate fuels and/or high altitude.

⚠ CAUTION

To prevent unreliable operation or equipment damage, the inlet gas supply pressure must be as specified on the unit rating plate with all other household gas-fired appliances operating.

Inlet gas supply pressures must be maintained within the ranges specified in the Inlet Gas Supply Pressure chart. The supply pressure must be constant and available with all other household gas-fired appliances operating. The minimum gas supply pressure must be maintained to avoid unreliable ignition. The maximum must not be exceeded to keep the furnace from overfiring.

Inlet Gas Supply Pressure	
Natural gas	5.0" W.C. minimum; 10.0" W.C. maximum
Propane gas	11.0" W.C. minimum; 13.0" W.C. maximum

High Altitude Derate

When this furnace is installed at high altitude, the appropriate high-altitude orifice kit must be applied. This is required due to the natural reduction in the density of both the gas fuel and combustion air as altitude increases. The kit will provide the proper design-certified input rate within the specified altitude range.

High altitude kits are purchased according to the installation altitude and usage of either Natural or propane gas. Contact your distributor for a tabular listing of appropriate altitude ranges and corresponding manufacturer's high altitude (Natural, propane gas, and/or pressure switch) kits.

NOTE: Do not derate the furnace by adjusting the manifold pressure to a lower pressure than specified on the furnace rating plate. The combination of the lower air density and a lower manifold pressure will prohibit the burner orifice from drawing the proper amount of air into the burner. This may cause incomplete combustion, flashback and possible yellow tipping.

In some areas the gas supplier may artificially derate the gas in an effort to compensate for the effects of altitude. If the gas is artificially derated, the appropriate orifice size must be determined based upon the Btu/ft^3 content of the derated gas and the altitude. Refer to the National Fuel Gas Code, NFPA 54/ ANSI Z223.1, and information provided by the gas supplier to determine the proper orifice size.

A different pressure switch may be required at high altitude regardless of the Btu/ft^3 content of the fuel used. Contact your distributor for a tabular listing of appropriate altitude ranges and corresponding manufacturer's pressure switch kits.

Propane Gas Conversion

⚠ WARNING

Possible property damage, personal injury or death may occur if the correct conversion kits are not installed. The appropriate kits must be applied to ensure safe and proper furnace operation. All conversions must be performed by a qualified installer or service agency.

This furnace is configured for Natural gas. The appropriate manufacturer's propane gas conversion kit must be applied for propane gas installations. Refer to "Propane Gas and/or High Altitude Installations" section for details.

Contact your distributor for a tabular listing of appropriate manufacturer's kits for propane gas and/or high-altitude installations. The indicated kits must be used to ensure safe and proper furnace operation. All conversions must be performed by a qualified installer or service agency.

Gas Control Valve

This furnace is equipped with a 24-volt gas control valve controlled during the furnace operation by the integrated control module. As shipped, the gas control valve is configured for Natural gas. The gas control valve is field-convertible for use with propane gas by replacing the regulator spring with a propane gas spring from an appropriate manufacturer's propane gas conversion kit. Taps for measuring the gas supply pressure and manifold pressure are provided on the valve.

The gas control valve has a manual On/Off control located on the gas control valve itself. This control may be set only to the "On" or "Off" position.

Refer to the lighting instructions label or see "Start-Up Procedure and Adjustment" for use of this control during the start-up and shutdown periods.

Gas Piping Connections

⚠ CAUTION

To avoid possible unsatisfactory operation or equipment damage due to underfiring of equipment, use the proper size of Natural/propane gas piping needed when running pipe from the meter/tank to the furnace.

When sizing a trunk line, be sure to include all appliances which will operate simultaneously when sizing a trunk line.

The gas piping supplying the furnace must be properly sized based on the gas flow required, specific gravity of the gas and the length of the run. The gas line installation must comply with local codes, or in their absence, with the latest edition of the National Fuel Gas Code, NFPA 54/ANSI Z223.1.

Natural Gas Capacity of Pipe—Cu ft of Gas Per Hour (CFH)

Length of Pipe—ft (m)	Nominal Black Pipe Size				
	½"	¾"	1"	1¼"	1½"
10 (3)	132	278	520	1,050	1,600
20 (6.1)	92	190	350	730	1,100
30 (9.2)	73	152	285	590	980
40 (12.2)	63	130	245	500	760
50 (15.2)	56	115	215	440	670
60 (18.3)	50	105	195	400	610
70 (21.3)	46	96	180	370	560
80 (24.4)	43	90	170	350	530
90 (27.4)	40	84	160	320	490
100 (30.5)	38	79	150	305	460

Pressure 0.5 psig or less and pressure drop of 0.3" W.C.; based on 0.60 specific gravity gas

$$\text{CFH} = \frac{\text{Btu/h Furnace Input}}{\text{Heating Value of Gas (Btu/cu ft}}$$

To connect the furnace to the building's gas piping, the installer must supply a ground joint union, drip leg, manual shutoff valve and line and fittings to connect to the gas control valve. In some cases, the installer may also need to supply a transition piece from ½" (1.3 cm) pipe to a larger pipe size.

The following stipulations apply when connecting gas piping. Refer to "Gas Piping Connections" illustrations for typical gas line connections to the furnace.

- Use black iron or steel pipe and fittings for building piping.
- Where possible, use new pipe that is properly chamfered, reamed and free of burrs and chips.

  NOTE: If old pipe is used, be sure it is clean and free of rust, scale, burrs, chips and old pipe joint compound.
- Use pipe joint compound (pipe dope) on male threads only.
- Always use pipe joint compound (pipe dope) that is approved for all gases.

  NOTE: Do not apply compound to the first 2 threads.
- Use ground joint unions.
- Install a drip leg to trap dirt and moisture before it can enter the gas control valve. The drip leg must be a minimum of 3" (7.6 cm) long.
- Install a ⅛" NPT pipe plug fitting, accessible for test gage connection, immediately upstream of the gas supply connection to the furnace.
- Always use a backup wrench when making the connection to the gas control valve to keep it from turning.

  NOTE: The orientation of the gas control valve on the manifold must be maintained as shipped from the factory.
- Maximum torque for the gas control valve connection is 375 in-lbs.

  NOTE: Excessive overtightening may damage the gas control valve.
- Install a manual shutoff valve between the gas meter and the furnace within 6 ft (1.8 m) of the furnace.
- If a union is installed, the union must be downstream of the manual shutoff valve, between the shutoff valve and the furnace.
- Tighten all joints securely.
- Connect the furnace to the building piping by one of the following methods:

  1. Rigid metallic pipe and fittings.
  2. Semirigid metallic tubing and metallic fittings.

  NOTE: Aluminum alloy tubing must not be used in exterior locations. In order to seal the grommet cabinet penetration, rigid pipe must be used to reach the outside of the cabinet. A semirigid connector to the gas piping may be used from there.
- Use UL Listed/CSA approved gas appliance connectors in accordance with their instructions.
- Gas connectors must be fully in the same room as the furnace.
- Protect gas connectors and semirigid tubing against physical and thermal damage when installed.
- Ensure aluminum alloy tubing and connectors are coated to protect against external corrosion when in contact with masonry, plaster, insulation or subjected to repeated wetting by liquids such as water (except rainwater), detergents or sewage.

Gas Piping Connections—Upflow

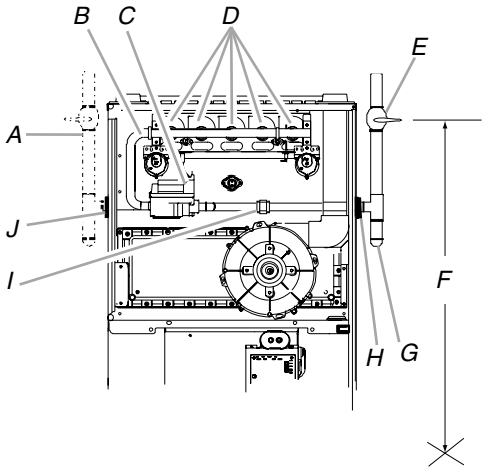

A. Alternate gas line location
B. Manifold
C. Gas control valve
D. Burners
E. Manual shutoff valve (upstream from ground joint pipe union)
F. Height required by local codes
G. Drip leg
H. Grommet in standard gas line hole
I. Ground joint pipe union
J. Plug in alternate gas line hole

Gas Piping Connections—Counterflow

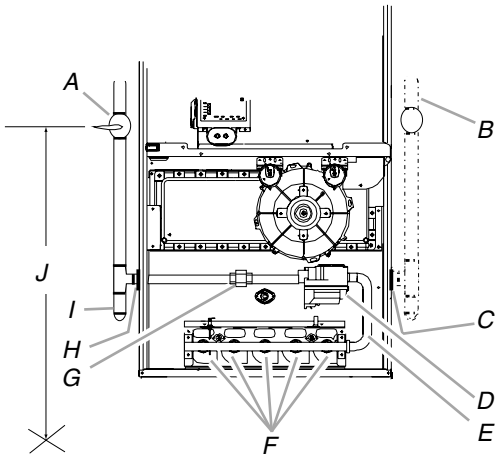

A. Manual shutoff valve (upstream from ground joint pipe union)
B. Alternate gas line location
C. Plug in alternate gas line hole
D. Gas control valve
E. Manifold
F. Burners
G. Ground joint pipe union
H. Grommet in standard gas line hole
I. Drip leg
J. Height required by local codes

Gas Piping Connections—Horizontal Upflow

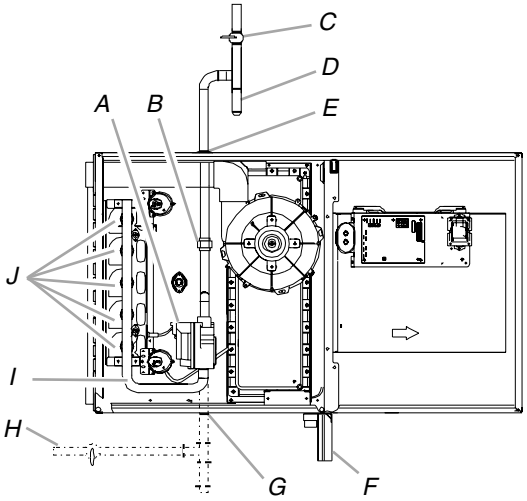

A. Gas control valve
B. Ground joint pipe union
C. Manual shutoff valve (upstream from ground joint pipe union)
D. Drip leg
E. Grommet in standard gas line hole
F. Drain trap
G. Plug in alternate gas line hole
H. Alternate gas line location
I. Manifold
J. Burners

Gas Piping Connections—Horizontal Counterflow

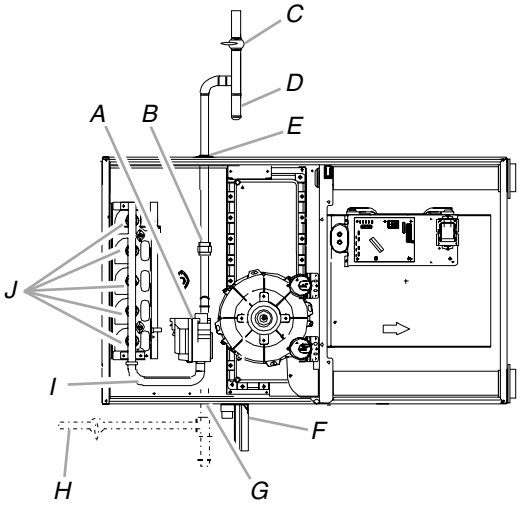

A. Gas control valve
B. Ground joint pipe union
C. Manual shutoff valve (upstream from ground joint pipe union)
D. Drip leg
E. Grommet in standard gas line hole
F. Drain trap
G. Plug in alternate gas line hole
H. Alternate gas line location
I. Manifold
J. Burners

Direct/Standard Inlet Piping

WARNING

Edges of sheet metal holes may be sharp. Use gloves as a precaution when removing hole plugs.

When gas piping enters directly to the gas control valve through the standard inlet hole, the installer must supply straight pipe with a ground joint union to reach the exterior of the furnace. The rigid pipe must be long enough to reach the outside of the cabinet to seal the grommet cabinet penetration. A semirigid connector to the gas piping can be used outside the cabinet per local codes.

Indirect/Alternate Inlet Piping

When gas piping enters indirectly to the gas control valve through the alternate gas inlet hole, the following fittings (starting from the gas control valve) must be supplied to reach the outside of the cabinet:

- Coupling
- 90º elbow
- 2" close nipple
- 90º elbow
- Straight pipe with a ground joint union to reach the exterior of the furnace.

NOTE: The rigid pipe must be long enough to reach the outside of the cabinet so as to seal the grommet cabinet penetration. A semirigid connector to the gas piping can be used outside the cabinet per local codes.

Gas Piping Checks

Before placing the furnace in operation, leak test the furnace and gas connections.

WARNING

To avoid the possibility of explosion or fire, never use a match or open flame to test for leaks.

Check for leaks using an approved chloride-free soap and water solution, an electronic combustible gas detector, or other approved testing methods.

WARNING

To prevent property damage or personal injury due to fire, the following instructions must be performed regarding gas connections, pressure testing, location of shutoff valve and installation of gas piping.

NOTES:

- Never exceed specified pressures for testing. Higher pressure may damage the gas control valve and cause subsequent overfiring, resulting in heat exchanger failure.
- Disconnect this unit and external manual shutoff valve from the gas supply piping system before pressure testing the supply piping system with pressures in excess of ½ psig (3.48 kPa).
- Isolate this unit from the gas supply piping system by closing the external manual gas shutoff valve before pressure testing supply piping system with test pressures equal to or less than ½ psig (3.48 kPa).

Propane Gas Tanks and Piping

WARNING

If the gas furnace is installed in a basement, and excavated area or a confined space, it is strongly recommended to contact a propane supplier to install a gas detecting warning device in case of a gas leak.
— Since propane gas is heavier than air, any leaking can settle in low areas or confined spaces.
— Propane gas odorant may fade, making the gas undetectable except with a warning device.

A gas detecting warning system is the only reliable way to detect a propane gas leak. Rust can reduce the level of odorant in propane gas. Do not rely on your sense of smell. Contact a local propane gas supplier about installing a gas detecting warning system.

All propane gas equipment must conform to the safety standards of the National Board of Fire Underwriters, NBFU Manual 58.

For satisfactory operation, propane gas pressure must be 11" W.C. at the furnace manifold with all gas appliances in operation.

Maintaining proper gas pressure depends on 3 main factors:

- Vaporization rate, depending on temperature of the liquid and “wetted surface” area of the container or containers.
- Proper pressure regulation. 2-stage regulation is recommended for both cost and efficiency.
- Pressure drop in the lines between the regulators, and between 2nd stage regulator and the appliance. Pipe size will depend on the length of the pipe run and the total load of all appliances.

Complete information regarding tank sizing for vaporization, recommended regulator settings, and pipe sizing is available from most regulator manufacturers and propane gas suppliers.

Since propane gas will quickly dissolve white lead and most standard commercial compounds, special pipe dope must be used. Shellac-based compounds resistant to the actions of liquefied petroleum gases, such as Gasolac®, Stalactic®, Clyde’s® or John Crane® are satisfactory.

Refer to “Propane Gas Installation—Typical” for typical propane gas installations and piping.

Propane Gas Installation—Typical

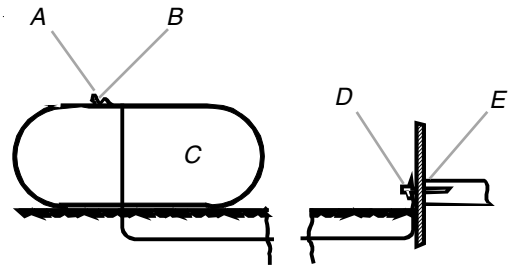

A. 1st stage regulator
B. 5 to 15 psig (20 psig maximum)
C. 200 psig maximum
D. 2nd stage regulator
E. Continuous 11" W.C.

Sizing Between 1st and 2nd Stage Regulator*

Maximum propane capacities listed are based on 2 psig pressure drop at 10 psig setting. Capacities in 1,000 Btu/h.

Propane Gas Piping Chart I

	Tubing Size, O.D. Type L					Nominal Pipe Size Schedule 40	
Pipe or Tubing Length—ft (m)	**⅜"**	**½"**	**⅝"**	**¾"**	**⅞"**	**½"**	**¾"**
10 (3)	730	1,700	3,200	5,300	8,300	3,200	7,500
20 (6.1)	500	1,100	2,200	3,700	5,800	2,200	4,200
30 (9.2)	400	920	2,000	2,900	4,700	1,800	4,000
40 (12.2)	370	850	1,700	2,700	4,100	1,600	3,700
50 (15.2)	330	770	1,500	2,400	3,700	1,500	3,400
60 (18.3)	300	700	1,300	2,200	3,300	1,300	3,100
80 (24.4)	260	610	1,200	1,900	2,900	1,200	2,600
100 (30.5)	220	540	1,000	1,700	2,600	1,000	2,300
125 (38.1)	200	490	900	1,400	2,300	900	2,100
150 (45.7)	190	430	830	1,300	2,100	830	1,900
175 (53.3)	170	400	780	1,200	1,900	770	1,700
200 (61)	160	380	730	1,100	1,800	720	1,500

To convert to capacities at 15 psig settings—multiply by 1.13. To convert to capacities at 5 psig settings—multiply by 0.879.

Sizing Between Single or 2nd Stage Regulator and Appliance*

Maximum Propane Capacities Listed are Based on ½" W.C. pressure drop at 11" W.C. setting. Capacities in 1,000 Btu/h.

Propane Gas Piping Chart II

	Tubing Size, O.D. Type L					Nominal Pipe Size Schedule 40				
Pipe or Tubing Length—ft (m)	**⅜"**	**½"**	**⅝"**	**¾"**	**⅞"**	**½"**	**¾"**	**1"**	**1¼"**	**1½"**
10 (3)	39	92	199	329	501	275	567	1,071	2,205	3,307
20 (6.1)	26	62	131	216	346	189	393	732	1,496	2,299
30 (9.2)	21	50	107	181	277	152	315	590	1,212	1,858
40 (12.2)	19	41	90	145	233	129	267	504	1,039	1,559
50 (15.2)	18	37	79	131	198	114	237	448	913	1,417
60 (18.3)	16	35	72	121	187	103	217	409	834	1,275
80 (24.4)	13	29	62	104	155	89	185	346	724	1,066
100 (30.5)	11	26	55	90	138	78	162	307	630	976
125 (38.1)	10	24	48	81	122	69	146	275	567	866
150 (45.7)	9	21	43	72	109	63	132	252	511	787
200 (61)	8	19	39	66	100	54	112	209	439	665
250 (76.2)	8	17	36	60	93	48	100	185	390	590

Data in accordance with NFPA pamphlet Number 54.

CIRCULATING AIR AND FILTERS

Ductwork—Airflow

WARNING

Never allow the products of combustion, including carbon monoxide, to enter the return ductwork or circulation air supply.

- Duct systems and register sizes must be properly designed for the CFM and external static pressure rating of the furnace. Design the ductwork in accordance with the recommended methods of “Air Conditioning Contractors of America” Manual D.
- Install the duct system in accordance with Standards of the National Board of Fire Underwriters for the Installation of Air Conditioning, Warm Air Heating and Ventilating Systems. Pamphlets No. 90A and 90B.
- A closed return duct system must be used, with the return duct connected to the furnace.

  NOTE: Ductwork must never be attached to the back of the furnace.
- For upflow installations requiring 1,800 CFM or more, use either 2 side returns or bottom return or a combination of side /bottom.
- Flexible joints may be used for supply and return connections to reduce noise transmission.
- To prevent the blower from interfering with combustion air or draft when a central return is used, a connecting duct must be installed between the unit and the utility room wall.
- Never use a room, closet or alcove as a return air chamber.

Bottom Return Air Opening—Upflow Models

The bottom return air opening on upflow models utilizes a “lance and cut” method to remove sheet metal from the duct opening in the base pan.

1. To remove, simply press out the lanced sections by hand to expose the metal strips retaining the sheet metal over the duct opening.
2. Using tin snips, cut the metal strips and remove the sheet metal covering the duct opening.
3. In the corners of the opening, cut the sheet metal along the scribe lines to free the duct flanges.
4. Using the scribe line along the duct flange as a guide, unfold the duct flanges around the perimeter of the opening using a pair of seamer pliers or seamer tongs.

   NOTE: Airflow area will be reduced by approximately 18% if duct flanges are not unfolded. This could cause performance issues and noise issues.

WARNING

Edges of sheet metal holes may be sharp. Use gloves as a precaution when removing hole plugs.

Duct Flange Cutouts

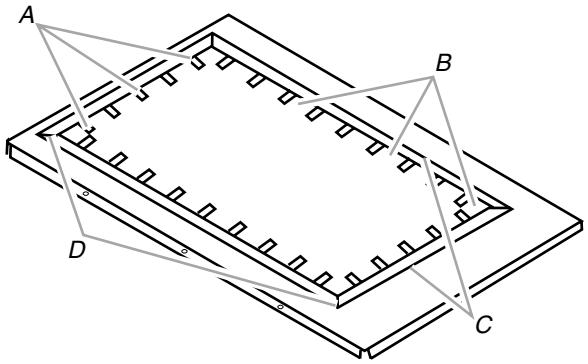

A. Cut using tin snips.
B. Press out by hand.
C. Scribe lines outlining duct flanges.
D. Cut 4 corners after removing sheet metal.

When the furnace is used in connection with a cooling unit, the furnace should be installed in parallel with or on the upstream side of the cooling unit to avoid condensation in the heating element. With a parallel flow arrangement, the dampers or other means used to control the flow of air must be adequate to prevent chilled air from entering the furnace and, if manually operated, must be equipped with means to prevent operation of either unit unless the damper is in the full heat or cool position.

When the furnace is installed without a cooling coil, it is recommended that a removable access panel be provided in the outlet air duct. This opening shall be accessible when the furnace is installed and shall be of such a size that the heat exchanger can be viewed for visual light inspection or such that a sampling probe can be inserted into the airstream. The access panel must be made to prevent air leaks when the furnace is in operation.

When the furnace is heating, the temperature of the return air entering the furnace must be between 55°F and 100°F (13ºC and 38ºC).

Filters—Read This Section Before Installing the Return Air Ductwork

- Filters must be used with this furnace. Discuss filter maintenance with the building owner.
- Filters do not ship with this furnace, but must be provided, sized and installed externally by the installer.
- Filters must comply with UL900 or CAN/ULCS111 standards. If the furnace is installed without filters, the warranty will be voided.
- On upflow units, guide dimples locate the side return cutout locations. Use a straight edge to scribe lines connecting the dimples. Cut out the opening on these lines.

  NOTE: An undersized opening will cause reduced airflow.

Refer to Minimum Filter Requirement charts to determine filter area requirements.

Minimum Filter Requirements Chart							
Upflow—Cooling Airflow Requirement (CFM)—Permanent Minimum Filter Area (sq. in.) Based On 600 ft (182.9 m) Per Minute Filter Face Velocity							
Input Airflow	**600**	**800**	**1,000**	**1,200**	**1,400**	**1,600**	**2,000**
0453	376*	384	480	576	-	-	-
0704	-	-	627*	627*	672	768	-
0905	-	-	-	836*	836*	836*	960
1155	-	-	-	940*	940*	940*	960
Counterflow—Cooling Airflow Requirement (CFM)—Permanent Minimum Filter Area (sq. in.) Based On 600 ft (182.9 m) Per Minute Filter Face Velocity							
0704	-	-	320*	320*	336	384	-
0905	-	-	-	427*	427*	427*	480

*Minimum filter area dictated by heating airflow requirement.

Upright Installations

Depending on the installation and/or customer preference, filters can be installed in the central return register or a side panel external filter rack kit (upflows). As an alternative, a media air filter or electronic air cleaner can be used as the requested filter.

The following illustrations show possible filter locations.

Filter Locations—Possible Upright Upflow

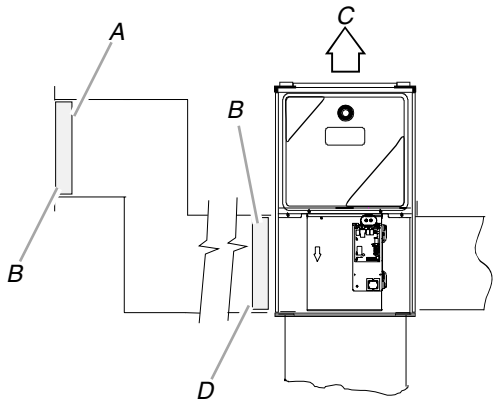

A. Central return grille
B. Filter
C. Airflow
D. Side return external filter rack kit (either side)

Filter Locations—Possible Upright Counterflow

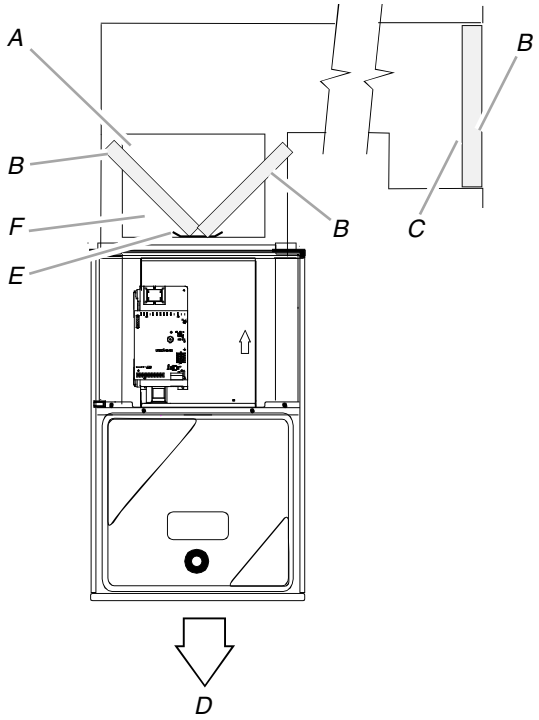

A. Filter access door
B. Filter
C. Central return grille
D. Airflow
E. Filter support bracket (provided)
F. Return duct

Horizontal Installations

Filters must be installed in either the central return register or in the return air ductwork.

START-UP PROCEDURE AND ADJUSTMENT

This furnace must have a 115 VAC power supply properly connected and grounded. Proper polarity must be maintained for correct operation. In addition to the following start-up and adjustment items, refer to further information in “Operational Checks.”

Heat Anticipator Setting

The heat anticipator in the room thermostat must be correctly adjusted to obtain the proper number of cycles per hour and to avoid “overshooting” of the setting. Set the heat anticipator setting to 0.7 amps. Follow the thermostat manufacturer’s instructions on how to adjust the heat anticipator setting.

Drain Trap Priming

The drain trap must be primed prior to the furnace start-up. To prime, fill the drain trap with water. This ensures proper furnace drainage upon start-up and avoids the possibility of flue gases escaping through the drain system.

Furnace Operation

1. Purge the gas lines of air prior to start-up.

   NOTE: Be sure not purge lines into an enclosed burner compartment.
2. Check for leaks using an approved chloride-free soap and water solution, an electronic combustible gas detector or other approved method.
3. Verify that all required kits (propane gas, high altitude, etc.) have been appropriately installed.

Furnace Start-Up

1. Close the manual gas shutoff valve external to the furnace.
2. Turn off the electrical power to the furnace.
3. Set the room thermostat to the lowest possible setting.
4. Remove the burner compartment door.

NOTE: This furnace is equipped with an ignition device which automatically lights the burner. Do not try to light the burner by hand.

5. Move the furnace gas control valve manual control to the Off position.
6. Wait 5 minutes, and then check for a gas odor.

   NOTE: Check near the floor as some types of gas are heavier than air.
7. If a gas odor is detected, follow the instructions in “Gas Furnace Safety Precautions” in this manual.
8. If no gas odor is detected, move the furnace gas control valve manual control to the On position.
9. Replace the burner compartment door.
10. Open the manual gas shutoff valve external to the furnace.
11. Turn on the electrical power to the furnace.
12. Adjust the thermostat to a setting above room temperature.
13. After the burners are lit, set the thermostat to the desired temperature.

Furnace Shutdown

1. Set the thermostat to the lowest setting.

   The integrated control will close the gas control valve and extinguish the flame. Following a 15-second delay, the induced draft blower will be de-energized.

   After a 120-, 150-, 180- or 210-second delay period (field-selectable delay Off [90, 120, 150, 180] plus a 30-second ramp down), the circulator blower de-energizes.
2. Remove the burner compartment door and move the furnace gas control valve manual control to the Off position.
3. Close the manual gas shutoff valve external to the furnace.
4. Replace the burner compartment door.

Gas Supply Pressure Measurement

⚠ CAUTION

To prevent unreliable operation or equipment damage, the inlet gas supply pressure must be as specified on the unit rating plate with all other household gas-fired appliances operating.

The line pressure supplied to the gas control valve must be within the range specified below. The supply pressure can be measured at the gas control valve inlet pressure boss or at a hose fitting installed in the gas piping drip leg. The supply pressure must be measured with the burners operating. To measure the gas supply pressure, use the following procedure.

Gas Control Valve—White-Rodgers 2-Stage 36G54

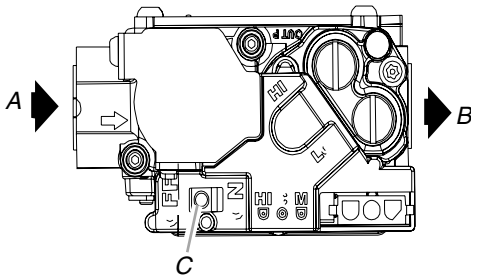

A. Inlet
B. Outlet
C. On/Off selector switch

Gas Control Valve—White-Rodgers 36G54 Connected to Manometer

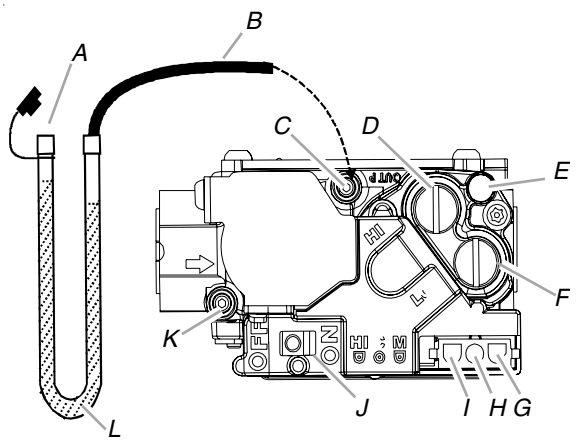

A. Open to atmosphere
B. Manometer hose
C. Outlet pressure boss
D. High-fire regulator adjust
E. Regulator vent
F. Low-fire regulator adjust
G. Coaxial coil terminal (M)
H. Common terminal (C)
I. High-fire coil terminal (HI)
J. On/Off selector switch
K. Inlet pressure boss
L. Manometer

Gas Control Valve—Honeywell 2-Stage VR9205

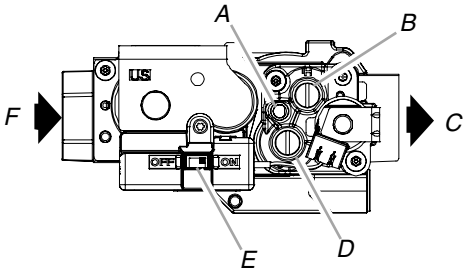

A. Regulator vent
B. High-fire regulator adjust
C. Outlet
D. Low-fire regulator adjust
E. On/Off selector switch
F. Inlet

Gas Control Valve—Honeywell VR9205 Connected to Manometer

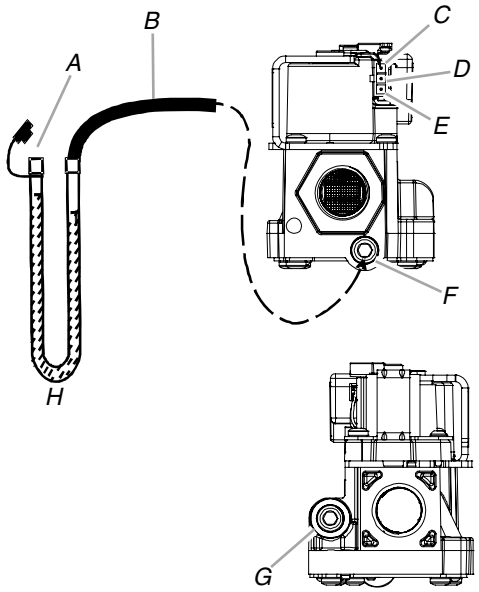

A. Open to atmosphere
B. Manometer hose
C. Common terminal (C)
D. High-fire coil terminal (HI)
E. Low-fire coil terminal (LO)
F. ⅛" NPT inlet pressure tap
G. ⅛" NPT outlet pressure tap
H. Manometer

1. Turn off the gas supply to the furnace at the manual gas shutoff valve external to the furnace.
2. Disconnect all electrical power to the system.
3. Connect a calibrated water manometer (or appropriate gas pressure gauge) at either the gas control valve inlet pressure boss or the gas piping drip leg. See “Gas Control Valve—Honeywell VR9205 Connected to Manometer” or “Gas Control Valve—White-Rodgers 36G54 Connected to Manometer” illustration for location of inlet pressure boss/tap.

NOTE: If you are measuring the gas pressure at the drip leg or on the Honeywell VR9205 gas control valve, a field-supplied hose barb fitting must be installed prior to making the hose connection. If using the inlet pressure boss on the White-Rodgers 36G54 gas control valve, then use the 36G Valve Pressure Check Kit, Part Number 0151K00000S.

4. Turn on the gas supply and operate the furnace and all other gas consuming appliances on the same gas supply line.
5. Measure the furnace gas supply pressure with burners firing.

NOTE: Supply pressure must be within the range specified in the Inlet Gas Supply Pressure chart.

Inlet Gas Supply Pressure	
Natural Gas	Minimum: 5.0" W.C. Maximum: 10.0" W.C.
Propane Gas	Minimum: 11.0" W.C. Maximum: 13.0" W.C.

If the supply pressure differs from chart, make the necessary adjustments to the pressure regulator, gas piping size, etc., and/or consult with local gas utility.

6. Turn off the gas supply to the furnace at the manual shutoff valve.
7. Disconnect the manometer.
8. Reinstall plug before turning on gas supply to furnace.
9. Turn off any unnecessary gas appliances that were turned on in Step 4.

Measuring Inlet Gas Pressure—Alternate Method

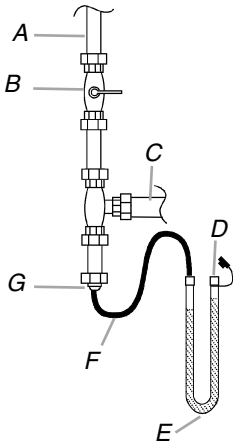

A. Gas supply line
B. Gas shutoff valve
C. Gas supply line to furnace
D. Open to atmosphere
E. Manometer
F. Manometer hose
G. Dripleg cap with fitting

Gas Manifold Pressure Measurement and Adjustment

⚠ CAUTION

To prevent unreliable operation or equipment damage, the gas manifold pressure must be as specified on the unit rating plate. Only minor adjustments should be made by adjusting the gas control valve pressure regulator.

Only small variations in gas pressure should be made by adjusting the gas control valve pressure regulator. The manifold pressure must be measured with the burners operating. To measure and adjust the manifold pressure, use the following procedure.

1. Turn off the gas supply to the furnace at the manual gas shutoff valve external to the furnace.
2. Turn off all electrical power to the system.
3. Outlet pressure tap connections:
   - Honeywell VR9205 valve: Remove the outlet pressure boss plug. Install an ⅛" NPT hose barb fitting into the outlet pressure tap.
   - White-Rodgers 36G54 valve: Back outlet pressure test screw (inlet/outlet pressure boss) out one turn counterclockwise (not more than one turn).

4. Attach a hose and manometer to the outlet pressure barb fitting (Honeywell valve) or outlet pressure boss (White-Rodgers valve).
5. Turn on the gas supply.
6. Turn on power and close thermostat contacts R and W1 to provide a call for low-stage heat.
7. Measure the gas manifold pressure with burners firing.
8. Adjust manifold pressure using the Manifold Gas Pressure chart shown below.
9. Remove the regulator cover screw from the low (LO) outlet pressure regulator adjust tower.
10. Turn the screw clockwise to increase pressure or counterclockwise to decrease pressure.
11. Replace regulator cover screw.
12. Close thermostat contacts R and W2 to provide a call for high-stage heat.
13. Remove the regulator cover screw from the high (HI) outlet pressure regulator adjust tower.
14. Turn the screw clockwise to increase pressure or counterclockwise to decrease pressure.
15. Replace the regulator cover screw.
16. Turn off all electrical power and gas supply to the system.
17. Remove the manometer hose from the hose barb fitting or outlet pressure boss.
18. Replace the outlet pressure tap:
    - Honeywell VR9205 valve: Remove the ⅛" NPT hose barb fitting from the outlet pressure tap. Replace the outlet pressure boss plug and seal with a high quality thread sealer.
    - White-Rodgers 36G54 valve: Turn the outlet pressure test screw in to seal pressure port (clockwise, 7 in-lb minimum).
19. Turn on electrical power and gas supply to the system.
20. Close the thermostat contacts R and W1/W2 to energize the valve.
21. Using a leak detection solution or soap suds, check for leaks at the outlet pressure boss plug (Honeywell valve) or screw (White-Rodgers valve). Bubbles forming indicate a leak.

    IMPORTANT: If a leak is detected, turn off gas immediately and repair all leaks.

NOTE: For gas-to-gas conversion, consult your dealer for appropriate conversion.

Manifold Gas Pressure

Gas		Range	Nominal
Natural	Low Stage	1.6" to 2.2" W.C.	1.9" W.C.
	High Stage	3.2" to 3.8" W.C.	3.5" W.C.
Propane	Low Stage	5.7" to 6.3" W.C.	6.0" W.C.
	High Stage	9.7" to 10.3" W.C.	10.0" W.C.

Gas Input Rate Measurement—Natural Gas Only

The gas input rate to the furnace must never be greater than that specified on the unit rating plate. To measure Natural gas input using the gas meter, use the following procedure.

1. Turn off the gas supply to all other gas-burning appliances except the furnace.
2. While the furnace is operating, time and record one complete revolution of the smallest gas meter dial.
3. Calculate the number of seconds per cubic foot (sec/ft^3) of gas being delivered to the furnace. If the dial is a one cubic foot dial, divide the number of seconds recorded in Step 2 by one. If the dial is a 2 cubic foot dial, divide the number of seconds recorded in Step 2 by 2.
4. Calculate the furnace input in Btu per hour (Btu/h). Input equals the sum of the installation's gas heating value and a conversion factor (hours to seconds) divided by the number of seconds per cubic foot. The measured input must not be greater than the input indicated on the unit rating plate.

   Example: Installation's gas heating (HTG) value: 1,000 Btu/ft^3 (Obtained from gas supplier)

   Installation's seconds per cubic foot: 34 sec/ft^3

   Conversion Factor (hours to seconds): 3,600 sec/h

   Input = (Htg. value x 3,600) ÷ seconds per cubic foot

   Input = (1,000 Btu/ft^3 x 3,600 sec/h) ÷ 34 sec/ft^3

   Input = 106,000 Btu/h

Minor changes to the input rate may be accomplished through manifold pressure adjustments at the gas control valve. Refer to "Gas Manifold Pressure Measurement and Adjustment" section for details.

NOTE: The final manifold pressure cannot vary by more than ± 0.3" W.C. from the specified setting. Consult your local gas supplier if additional input rate adjustment is required.

5. Repeat steps 2 through 4 on high stage.
6. Turn on the gas supply to all other appliances turned off in Step 1.
7. Ensure that all appliances are functioning properly and that all pilot burners are lit and operating.

Temperature Rise

Temperature rise must be within the range specified on the unit rating plate. An incorrect temperature rise may result in condensing in or overheating of the heat exchanger. An airflow and temperature rise table is provided in the Specification Sheet applicable to your model. Determine and adjust temperature rise as follows:

1. Operate furnace with burners firing for approximately 10 minutes.
2. Ensure that all registers are open and all duct dampers are in their final (fully or partially open) position.
3. Place thermometers in the return and supply ducts as close to the furnace as possible. Thermometers must not be influenced by radiant heat from the heat exchanger.

Temperature Rise Measurement

Rise = Supply air temperature - Return air temperature

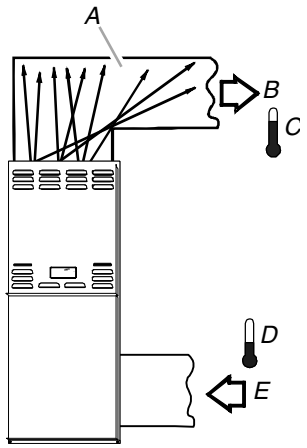

A. Heat exchanger radiation "line of sight"
B. Supply air
C. Supply air temperature
D. Return air temperature
E. Return air

4. Subtract the return air temperature from the supply air temperature to determine the air temperature rise. Allow adequate time for thermometer readings to stabilize.
5. Adjust the temperature rise by adjusting the circulator blower speed. Increase blower speed to reduce temperature rise. Decrease blower speed to increase temperature rise. Refer to "Circulator Blower Speeds" for speed changing details.

Circulator Blower Speeds

⚠ WARNING

To avoid personal injury or death due to electrical shock, turn OFF power to the furnace before changing speed taps.

This furnace is equipped with a multispeed circulator blower. This blower provides ease in adjusting blower speeds. The Specification Sheet applicable to your model provides an airflow table, showing the relationship between airflow (CFM) and external static pressure (E.S.P.), for the proper selection of heating and cooling speeds. The heating blower speed is shipped set at B, and the cooling blower speed is set at D. These blower speeds should be adjusted by the installer to match the installation requirements so as to provide the correct heating temperature rise and correct cooling CFM.

Use the dual 7-segment LED display adjacent to the DIP switches to obtain the approximate airflow quantity. The airflow quantity is displayed as a number on the display, rounded to the nearest 100 CFM. The display alternates airflow delivery indication and the operating mode indication.

Example: The airflow being delivered is 1,225 CFM. The display indicates 12. If the airflow being delivered is 1,275, the display indicates 13.

1. Determine the tonnage of the cooling system installed with the furnace. If the cooling capacity is in Btu/h, divide it by 12,000 to convert capacity to Tons.

   Example: Cooling Capacity of 30,000 Btu/h

   30,000/12,000 = 2.5 Tons
2. Determine the proper airflow for the cooling system. Most cooling systems are designed to work with airflows between 350 and 450 CFM per ton. Most manufacturers recommend an airflow of about 400 CFM per ton.

   Example: 2.5 tons X 400 CFM per ton = 1,000 CFM

NOTE: The cooling system manufacturer's instructions must be checked for required airflow. Any electronic air cleaners or other devices may require specific airflows, consult installation instructions of those devices for requirements.

3. Knowing the furnace model, locate the high-stage cooling airflow charts in the Specification Sheet applicable to your model. Look up the cooling airflow determined in Step 2 and find the required cooling speed and adjustment setting.

   Example: A WGFM295070V4C furnace installed with a 2.5 ton air conditioning system. The airflow needed is 1,000 CFM. Looking at the cooling speed chart for WGFM295070V4C, find the airflow closest to 1,000 CFM. A cooling airflow of 990 CFM can be attained by setting the cooling speed to C and the adjustment to "-" (minus).
4. Continuous fan speed is 30% of the furnace's maximum airflow capability.

   Example: If the furnace's maximum airflow capability is 2,000 CFM, the continuous fan speed will be 0.30 x 2,000 CFM = 600 CFM.
5. Locate the blower speed selection DIP switches on the integrated control module. Select the desired cooling speed tap by positioning DIP switches 1 and 2 appropriately.

   Select the desired adjust tap by positioning DIP switches 3 and 4 appropriately. Refer to the following charts for DIP switch positions and their corresponding taps. Verify CFM by noting the number displayed on the dual 7-segment LED display.

Speed Selection DIP Switches

	Cool Selection Switches		Adjust Selection Switches		Profile Selection Switches		Heat Selection Switches	
Tap	**1**	**2**	**3**	**4**	**5**	**6**	**7**	**8**
A	Off	Off	Off	Off	Off	Off	Off	Off
B	On	Off	On	Off	On	Off	On	Off
C	Off	On	Off	On	Off	On	Off	On
D	On	On	On	On	On	On	On	On

Switch Bank: S3

	DIP Switch Number	
Cooling Tap	**1**	**2**
A	Off	Off
B	On	Off
C	Off	On
D*	On	On

*Indicates factory setting

Speed Taps—Adjust

Switch Bank: S3

	DIP Switch Number	
Adjust Tap	**3**	**4**
Normal*	Off	Off
+10% Adjust	On	Off
-10% Adjust	Off	On
Normal	On	On

*Indicates factory setting

Comfort Mode Profiles

The multispeed circulator blower also offers several custom On/Off ramping profiles. These profiles may be used to enhance the cooling performance and increase the comfort level. The ramping profiles are selected using DIP switches 5 and 6. See the "Profile" illustrations for DIP switch positions and their corresponding taps. Verify CFM by noting the number displayed on the dual 7-segment LED display.

Switch Bank: S4

	DIP Switch Number	
Ramping Profile Tap	**5**	**6**
A*	Off	Off
B	On	Off
C	Off	On
D	On	On

* Indicates factory setting

Profile A

- Provides a 1-minute Off delay at 100% of the cooling demand airflow.

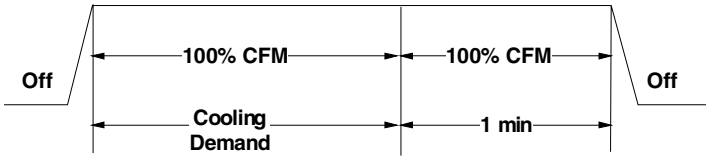

Profile B

- Ramps up to 50% of the full cooling demand airflow for 30 seconds.
- The motor then ramps to 100% of the required airflow.
- Provides a 1-minute Off delay at 100% of the cooling demand airflow.

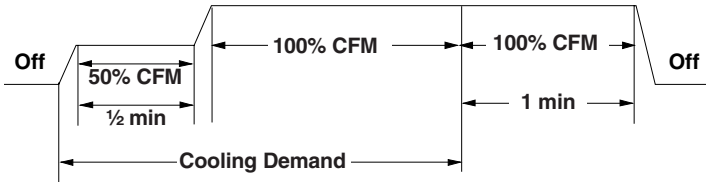

Profile C

- Ramps up to 85% of the full cooling demand airflow for approximately 7½ minutes.
- The motor then ramps to 100% of the required airflow.
- Provides a 1-minute Off delay at 100% of the cooling demand airflow.

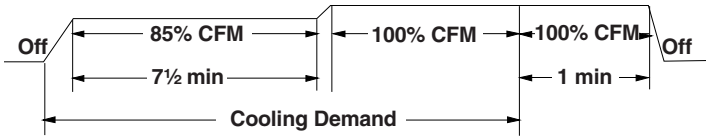

Profile D

- Ramps up to 50% of the full cooling demand airflow for 30 seconds.
- Then ramps to 85% of the full cooling demand airflow for approximately 7½ minutes.
- The motor then ramps to 100% of the required airflow.
- Provides a 30-second Off delay at 50% of the cooling demand airflow.

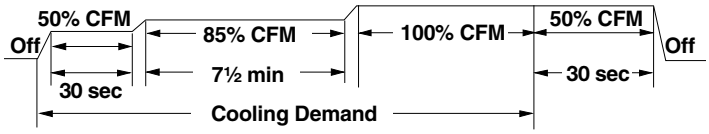

6. Select the heating speed from the heating speed chart in the Specification Sheet for your model. The Adjust Taps setting (already established by the cooling speed selection) determines which set of speeds are available. The selected speed must provide a temperature rise within the rise range listed with the particular model.

   Example: The WGFM290508V4C is set for 990 CFM on cooling, the “ADJUST” is set to “+” (plus). The 4 heating speeds available are “A Plus,” “B Plus,” “C Plus” and “D Plus.” “A Plus” has a rise of 46°F for both stages which is within the 30-60°F rise range for the WGFM290508V4C. This setting will keep electrical consumption to a minimum. Set the “Heat” speed DIP switches to “A.”

Switch Bank: S4

	DIP Switch Number	
Heating Tap	**7**	**8**
A	Off	Off
B*	On	Off
C	Off	On
D	On	On

*Indicates factory setting

7. Select the desired heating speed tap by positioning DIP switches 7 and 8 appropriately. Verify CFM by noting the number displayed on the dual 7-segment LED display.

In general, lower heating speeds will reduce electrical consumption, lower operating sound levels of the blower and increase the outlet air temperature delivered to the home. The speeds available allow the blower performance to be optimized for the particular homeowner’s needs.

Profiles	Pre-Run	Short-Run	Off -Delay
A	-	-	60 sec/100
B*	-	30 sec/50	60 sec/100
C	-	7.5 min/85	60 sec/100
D	30 sec/50	7.5 min/85	30 sec/50

*Indicates factory setting

To Set Airflow

1. Select the model and desired high-stage cooling airflow.
2. Determine the corresponding tap (A, B, C, or D).
3. Set DIP switches 1 and 2 to the appropriate On/Off positions.
4. Select the model and desired high-stage heating airflow.
5. Determine the corresponding tap (A, B, C, or D).
6. Set DIP switches 7 and 8 to the appropriate On/Off positions.
7. Select the airflow adjustment factor taps (A and D are 1; Tap B is +10; Tap C -10).
8. Set DIP switches 3 and 4 to the appropriate On/Off positions.

To Set Comfort Mode

1. Select desired comfort mode profile. See Comfort Mode Profile chart.
2. Set DIP switches 5 and 6 to the appropriate On/Off position.

Model	Tap	Low-Stage Cool	High-Stage Cool	Low-Stage Heat	High-Stage Heat
WGFD295071V4C	A	360	660	870	1,230
	B	520	830	950	1,350
	C	780	1,130	1,040	1,470
	D	960	1,460	1,130	1,600

Model	Tap	Low-Stage Cool	High-Stage Cool	Low-Stage Heat	High-Stage Heat
WGFD295091V5D	A	560	810	1,120	1,620
	B	740	1,110	1,220	1,760
	C	920	1,430	1,280	1,860
	D	1,190	1,860	1,340	1,970
WGFM295045V3B	A	390	600	550	792
	B	520	800	600	864
	C	650	1,000	650	936
	D	780	1,200	700	1,008
WGFM295070V4C	A	390	600	840	1,210
	B	520	800	920	1,325
	C	715	1,100	1,000	1,440
	D	929	1,429	1,080	1,555
WGFM295090V5C	A	550	810	1,050	1,490
	B	770	1,100	1,120	1,570
	C	1,000	1,470	1,200	1,690
	D	1,250	1,810	1,250	1,780
WGFM295090V5D	A	520	800	1,125	1,620
	B	715	1,000	1,195	1,721
	C	910	1,400	1,265	1,822
	D	1,170	1,800	1,335	1,922
WGFM295115V5D	A	520	800	1,230	1,771
	B	715	1,100	1,265	1,822
	C	910	1,400	1,300	1,872
	D	1,170	1,800	1,335	1,922

Blower Heat Off Delay Timings

The integrated control module provides a selectable heat-off delay function. The heat off delay period may be set to 90, 120, 150 or 180 seconds using the DIP switches or jumper provided on the control module. The delay is factory-shipped at 150 seconds, but may be changed to suit the installation requirements and/or homeowner preference. Refer to the following chart for DIP switch positions and corresponding delay times.

Switch Bank: S1

	DIP Switch Number	
Heat-Off Delay	**1**	**2**
90 seconds	Off	Off
120 seconds	On	Off
150 seconds*	Off	On
180 seconds	On	On

*Indicates factory setting

NORMAL SEQUENCE OF OPERATION

Power Up

The normal power up sequence is as follows:

- 115 VAC power applied to furnace.
- Integrated control module performs internal checks.
- Integrated control module displays “88” on the dual 7-segment LED display.
- Integrated control module monitors safety circuits continuously.
- Furnace awaits call from thermostat. Displays “On” on the dual 7-segment LED display.

Heating Mode

The normal operational sequence in heating mode is as follows:

- R and W1 (or R and W1/W2) thermostat contacts close, initiating a call for heat.
- Integrated control module performs safety circuit checks.
- Induced draft blower is energized on high speed for a 15-second prepurge. Humidifier terminal is energized with induced draft blower.
- Induced draft blower steps to low speed following prepurge. Low-stage pressure switch contacts are closed.
- Igniter warm-up begins upon step to low speed and presence of closed low-stage pressure switch contacts.
- Gas control valve opens at the end of the igniter warm-up period, delivering gas to the burners and establishing a flame.
- Integrated control module monitors flame presence. Gas control valve will remain open only if flame is detected.
- If the thermostat call is for low heat, the gas control valve and induced draft blower will continue on low stage. If the call is for high heat, the gas control valve and induced draft blower will change to high stage.
- Circulator blower is energized on heat speed following a fixed 30-second blower-on delay. The circulator blower requires 30 seconds to ramp up to full speed. Electronic air cleaner terminal is energized with circulator blower.
- Furnace is now operating on the specified stage called for by the 2-stage thermostat.
- Furnace runs, integrated control module monitors safety circuits continuously.
- If the 2-stage thermostat changes the call from low heat to high heat, the integrated control module will immediately switch the induced draft blower, gas control valve and circulator blower to their high-stage settings.
- If the 2-stage thermostat changes the call from high heat to low heat, the integrated control module will immediately switch the induced draft blower and gas control valve to their low-stage settings. The circulator blower will remain on high-heating speed for 30 seconds before switching to the low-heat circulating speed.

- R and W1 (or R and W1/W2) thermostat contacts open, completing the call for heat.
- Gas control valve closes, extinguishing flame.
- Induced draft blower is de-energized following a 15-second post purge. Humidifier terminal is de-energized.
- Circulator blower continues running for the selected heat-off delay period (90, 120, 150 or 180 seconds). The speed run during this period depends on the last heat call provided by the thermostat. If the last call for heat was a call for low heat, the air circulator motor will run on low heat speed for the duration of the heat-off delay period (90, 120, 150 or 180 seconds). If the last call for heat was a call for high heat, the air circulating motor will run on the high heating speed for 30 seconds and then switch to the low-heating speed for the balance of the heat-off delay period (60, 90, 120 or 150 seconds).
- Circulator blower and electronic air cleaner terminals are de-energized.
- Circulator blower ramps down to Off during the 30 seconds following the heat-off delay period.
- Furnace awaits next call from thermostat.

Cooling Mode

The normal operational sequence in cooling mode is as follows:

- R and Y1/G or Y2/G thermostat contacts close, initiating a call for cool.
- Integrated control module performs safety circuit checks.
- Outdoor fan and compressor are energized to their appropriate speeds.
- Circulator blower is energized on the appropriate cool speed at the level and time determined by the selected ramping profile. Electronic air cleaner terminals are energized with circulator blower.
- Furnace circulator blower and outdoor cooling unit run their appropriate speed; Integrated control module monitors safety circuits continuously.
- R and Y1/G or Y2/G thermostat contacts open, completing the call for cool.
- Outdoor fan and compressor are de-energized.
- Circulator blower continues running during a cool-off delay period. The Off delay time and airflow level are determined by the selected ramping profile.
- Electronic air cleaner terminal and circulator blower are de-energized.
- Furnace awaits next call from thermostat.

Fan Only Mode

The normal operational sequence in fan only mode is as follows:

- R and G thermostat contacts close, initiating a call for fan.
- Integrated control module performs safety circuit checks.
- Circulator blower is energized on continuous fan speed (30% of the furnace's maximum airflow capability) following a 5-second delay. Electronic air cleaner terminal is energized.
- Circulator blower runs; integrated control module monitors safety circuits continuously.
- R and G thermostat contacts open, completing the call for fan.
- Electronic air cleaner terminal and circulator blower are de-energized.
- Furnace awaits next call from thermostat.

Operational Checks

Burner Flame

The burner flames should be inspected with the burner compartment door installed. Flames should be stable, soft and blue (dust may cause orange tips but must not be yellow). The flames must extend directly outward from the burner without curling, floating or lifting off. Flames must not impinge on the sides of the heat exchanger firing tubes.

Burner Flame

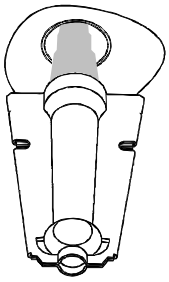

Check the burner flames for good adjustment, a stable, soft and blue flame that is not curling, floating or lifting off.

SAFETY CIRCUIT DESCRIPTION

General

A number of circuits are employed to ensure proper furnace operation. These circuits serve to control any potential safety hazards and serve as inputs in the monitoring and diagnosis of abnormal function. These circuits are continuously monitored during furnace operation by the integrated control module.

Integrated Control Module

The integrated control module is an electronic device which, if a potential safety concern is detected, will take the necessary precautions and provide diagnostic information through an LED.

Primary Limit Control

The primary limit control is located on the partition panel and monitors heat exchanger compartment temperatures. It is a normally closed (electrically), automatic reset, temperature-activated sensor. The limit guards against overheating as a result of insufficient conditioned air passing over the heat exchanger.

Auxiliary Limit Controls

The auxiliary limit controls are located on or near the circulator blower and monitors blower compartment temperatures. They are normally-closed (electrically), manual-reset sensors. These limits guard against overheating as a result of insufficient conditioned air passing over the heat exchanger.

Rollout Limit Controls

The rollout limit controls are mounted on the burner/manifold assembly and monitor the burner flame. They are normally-closed (electrically), manual-reset sensors. These limits guard against burner flames not being properly drawn into the heat exchanger.

Pressure Switches

The pressure switches are normally-open (closed during operation), negative air pressure-activated switches. They monitor the airflow (combustion air and flue products) through the heat exchanger via pressure taps located on the induced draft blower and the coil front cover. These switches guard against insufficient airflow (combustion air and flue products) through the heat exchanger and/or blocked condensate drain conditions.

Flame Sensor

The flame sensor is a probe mounted on the burner/manifold assembly which uses the principle of flame rectification to determine the presence or absence of flame.

MAINTENANCE

⚠ WARNING

HIGH VOLTAGE!

To avoid personal injury or death due to electrical shock, disconnect electrical power before performing any maintenance. If you must handle the igniter, handle with care. Touching the igniter element with bare fingers, rough handling or vibration could damage the igniter resulting in premature failure. Only a qualified servicer should ever handle the igniter.

Annual Inspection

The furnace should be inspected by a qualified installer, or service agency at least once per year. This check should be performed at the beginning of the heating season. This will ensure that all furnace components are in proper working order and that the heating system functions appropriately. Pay particular attention to the following items. Repair or service as necessary.

- Flue pipe system. Check for blockage and/or leakage. Check the outside termination and the connections at and internal to the furnace.
- Heat exchanger. Check for corrosion and/or buildup within the heat exchanger passageways.
- Burners. Check for proper ignition, burner flame and flame sense.
- Drainage system. Check for blockage and/or leakage. Check hose connections at and internal to furnace.
- Wiring. Check electrical connections for tightness and/or corrosion. Check wires for damage.
- Filters.

Filters

⚠ CAUTION

To ensure proper unit performance, adhere to the filter sizes given in the Recommended Minimum Filter Size chart or Specification Sheet applicable to your model.

NOTE: Please contact your distributor or our website for the applicable Specification Sheet referred to in this manual.

Filter Maintenance

Improper filter maintenance is the most common cause of inadequate heating or cooling performance. Filters should be cleaned (permanent) or replaced (disposable) every 2 months or as required. When replacing a filter, it must be replaced with a filter of the same type and size.

Filter Removal

Depending on the installation, differing filter arrangements can be applied. Filters can be installed in either the central return register or a side panel external filter rack (upflow only).

A media air filter or electronic air cleaner can be used as an alternate filter. Follow the filter sizes given in the Recommended Minimum Filter Size chart to ensure proper unit performance.

To remove filters from an external filter rack in an upright upflow installation, follow the directions provided with external filter rack kit.

Horizontal Unit Filter Removal

Filters in horizontal installations are located in the central return register or the ductwork near the furnace.

To remove:

1. Turn off electrical power to the furnace.
2. Remove the filter(s) from the central return register or ductwork.
3. Replace the filter(s) by reversing the procedure for removal.
4. Turn on electrical power to the furnace.

Media Air Filter or Electronic Air Cleaner Removal

Follow the manufacturer's directions for service.

Burners

⚠ WARNING

To avoid personal injury or death due to electrical shock, do not remove any internal compartment covers or attempt any adjustment. Contact a qualified servicer at once if an abnormal flame should develop.

Visually inspect the burner flames periodically during the heating season. Turn on the furnace at the thermostat and allow several minutes for flames to stabilize, since any dislodged dust will alter the flames normal appearance. Flames should be stable, quiet, soft and blue (dust may cause orange tips but they must not be yellow). They should extend directly outward from the burners without curling, floating or lifting off. Flames must not impinge on the sides of the heat exchanger firing tubes.

Induced Draft and Circulator Blowers

The bearings in the induced draft blower and circulator blower motors are permanently lubricated by the manufacturer. No further lubrication is required. Check motor windings for accumulation of dust which may cause overheating. Clean as necessary.

Condensate Trap and Drain System (Qualified Servicer Only)

Annually inspect the drain tubes, drain trap and field-supplied drain line for proper condensate drainage. Check drain system for hose connection tightness, blockage and leaks. Clean or repair as necessary.

Flame Sensor (Qualified Servicer Only)

Under some conditions, the fuel or air supply can create a nearly invisible coating on the flame sensor. This coating acts as an insulator causing a drop in the flame sense signal. If the flame sense signal drops too low, the furnace will not sense flame and will lock out. The flame sensor should be carefully cleaned by a qualified servicer using emery cloth or steel wool. Following cleaning, the flame sense signal should be as indicated in the Specifications Sheet.

Flue Passages (Qualified Servicer Only)

The heat exchanger flue passageways should be inspected at the beginning of each heating season. If necessary, clean the passageways as outlined below.

1. Turn off the electrical power and gas supply to the furnace.
2. Disconnect the gas line and remove the burner/manifold assembly by removing the screws securing the assembly to the partition panel.
3. Disconnect the flue pipe system from the induced draft blower.
4. Remove the induced draft blower and, drain and pressure tap hoses from the recuperator coil front cover.
5. Remove the recuperator coil front cover to expose the coil tubes and turbulators.
6. Remove the recuperator coil turbulators individually by slowly pulling each turbulator forward firmly.
7. Clean the recuperator coil tubes using a long handle wire brush, such as a gun cleaning brush.
8. Clean the primary heat exchanger tubes using a wire brush attached to a length of high grade stainless steel cable, such as drain cleanout cable. Attach a variable speed reversible drill to the other end of the cable. Slowly rotate the cable with the drill and insert it into one of the heat exchanger tubes. While reversing the drill, work the cable in and out several times to obtain sufficient cleaning. Repeat for each tube.
9. Clean the residue from the furnace by using a vacuum cleaner.
10. Replace the parts removed in the previous steps in reverse order.
11. Turn on electrical power and gas to furnace. Check for leaks and proper unit operation.
12. Severe heat exchanger fouling is an indication of an operational problem. Perform the checks listed in “Start-Up Procedure and Adjustments” to reduce the chances of repeated fouling.

Before Leaving an Installation

- Cycle the furnace with the thermostat at least 3 times. Verify cooling and fan only operation.
- Review the Owner’s Manual with the homeowner and discuss proper furnace operation and maintenance.
- Leave literature packet near furnace.

Repair and Replacement Parts

When ordering any of the listed functional parts, be sure to provide the furnace model, manufacturing and serial numbers with the order.

Although only functional parts are shown in the parts list, all sheet metal parts, doors, etc., may be ordered by description.

Parts are available from your distributor.

Functional Parts List	
■ Gas Control Valve	■ Blower Motor
■ Gas Manifold	■ Blower Wheel
■ Natural Gas Orifice	■ Blower Mounting Bracket
■ Propane Gas Orifice	■ Blower Cutoff
■ Igniter	■ Blower Housing
■ Flame Sensor	■ Inductor
■ Rollout Limit Switch	■ Heat Exchanger
■ Primary Limit Switch	■ Recuperator Coil
■ Auxiliary Limit Switch	■ Coil Front Cover
■ Pressure Switch	■ Integrated Control Module
■ Induced Draft Blower	■ Transformer
■ Door Switch	

TROUBLESHOOTING

Electrostatic Discharge (ESD) Precautions

NOTE: Discharge static electricity accumulated in the body before touching the unit. An electrostatic discharge can adversely affect electrical components.

Use the following steps during furnace installations and servicing to avoid damage to the integrated control module. By putting the furnace, the control and the person at the same electrostatic potential, these steps will help avoid exposing the integrated control module to electrostatic discharge. This procedure is applicable to both installed and non installed (ungrounded) furnaces.

1. Disconnect all power to the furnace.

   NOTE: Do not touch the integrated control module or any wire connected to the control prior to discharging your body's electrostatic charge to ground.
2. Firmly touch a clean, unpainted, metal surface of the furnace away from the control. Any tools held in a person's hand during grounding will be discharged also.
3. Service the integrated control module or connecting wiring after following the discharge process in Step 2.

   NOTE: Do not recharge your body with static electricity by moving or shuffling your feet or touching ungrounded objects. If you touch an ungrounded object, repeat Step 2 before touching the control or wires.
4. Follow steps 1 through 3 before removing a new control from its container or installing the control on a furnace. Return any old or new controls to their containers before touching any ungrounded object.

Fault Recall

The ignition control is equipped with a momentary pushbutton switch that can be used to display the last 6 faults on the dual 7-segment LED display. The control must be in Standby Mode (no thermostat inputs) to use the feature. Depress the switch for approximately 2 seconds. Release the switch when the LED display is turned off. The last 6 faults will be displayed most recent to least recent on the dual 7-segment LED display.

NOTE: Consecutively repeated faults are stored a maximum of 3 times. For example, a clogged return air filter causes the furnace limit to trip repeatedly. The control will only store this fault the first 3 consecutive times the fault occurs.

Resetting from Lockout

Furnace lockout results when a furnace is unable to achieve ignition after 3 attempts during a single call for heat. It is characterized by a nonfunctioning furnace and a "E0" code displayed on the dual 7-segment display. If the furnace is in "lockout," it will (or can be) reset in any of the following ways.

1. Automatic reset. The integrated control module will automatically reset itself and attempt to resume normal operations following a 1-hour lockout period.
2. Manual power interruption. Interrupt 115-volt power to the furnace.
3. Manual thermostat cycle. Lower the thermostat so that there is no longer a call for heat for 1 to 20 seconds, and then reset to previous setting.

NOTE: If the condition which originally caused the lockout still exists, the control will return to lockout. Refer to the "Diagnostic Chart."

Status Codes

		Internal control fault/no power
O	n	Normal operation
E	0	Lockout due to excessive retries
E	1	Low-stage pressure switch stuck closed at start of heating cycle
E	2	Low-stage pressure switch stuck open
E	3	Open high-limit switch
E	4	Flame detected when no flame should be present
E	5	Open fuse
E	6	Low flame signal
E	7	Igniter fault or improper grounding
E	8	High-stage pressure switch stuck closed at start of heating cycle
E	9	High-stage pressure switch stuck open
E	A	Reversed 115 VAC polarity
d	0	Data not yet on network
d	4	Invalid memory card data

b	0	Blower motor not running
b	1	Blower communication error
b	2	Blower HP mismatch
b	3	Blower motor operating in power, temperature or speed limit
b	4	Blower motor current trip or lost rotor
b	5	Blower motor locked rotor
b	6	Over/under voltage trip or over temperature trip
b	7	Incomplete parameters sent to motor
b	9	Low indoor airflow
C	1	Low-stage cooling
C	2	High-stage cooling
L	O	Low-stage heat
H	I	High-stage heat
	F	Continuous fan
1	2	CFM/100; Alternates with C1, C2, LO, HI, F

⚠ WARNING

HIGH VOLTAGE!

To avoid personal injury or death due to electrical shock, disconnect electrical power before performing any service or maintenance.

The dual 7-segment LED display will display an error code that may contain a letter and number. The error code may be used to assist in troubleshooting the unit.

Symptoms of Abnormal Operation	Diagnostic/ Status LED Code	Fault Description	Possible Causes	Corrective Actions	Notes and Cautions
■ Furnace fails to operate. ■ Integrated control module diagnostic LED display provides no signal.	None	■ No 115-volt power to furnace, or no 24-volt power to integrated control module. ■ Blown fuse or circuit breaker. ■ Internal fault in Integrated control module.	■ Manual disconnect switch Off, door switch open or 24-volt wire improperly connected or loose. ■ Blown fuse or circuit breaker. ■ Integrated control module has an internal fault.	■ Assure 115-volt power to the furnace, and 24-volt power to integrated control module. ■ Check integrated control module fuse. Replace with 3A automotive fuse, if necessary. ■ Check for possible shorts in 115-volt and 24-volt circuits. Repair as necessary. ■ Replace bad integrated control module.	■ Turn off power prior to repair. ■ Replace integrated control module fuse with 3A automotive fuse. ■ Read precautions in “Electrostatic Discharge” section of manual. ■ Replace integrated control module with current replacement parts.
■ LED display indicates “On.”	On	■ Normal operation	■ Normal operation	■ None	■ Normal operation
■ Furnace fails to operate. ■ Integrated control module LED display provides “E0” error code.	E0	■ Furnace lockout due to an excessive number of ignition “retries” (3 total).	■ Failure to establish flame. Cause may be no gas to burners, front cover pressure switch stuck open, bad igniter or igniter alignment, improper orifices or coated/oxidized or improperly connected flame sensor. ■ Loss of flame after establishment. Cause may be interrupted gas supply, lazy burner flames (improper gas pressure or restriction in flue and/or combustion air piping), front cover pressure switch opening, or improper induced draft blower performance.	■ Locate and correct gas interruption. ■ Check front cover pressure switch operation (hose, wiring, contact operation). Correct if necessary. ■ Replace or realign igniter. Igniter is fragile, handle gently. ■ Check flame sense signal. Sand sensor if coated and/or oxidized. ■ Check flue piping for blockage, proper length, elbows and termination. ■ Verify proper induced draft blower performance.	■ Turn off power prior to repair. ■ Igniter is fragile, handle with care. ■ Sand flame sensor with emery cloth. ■ See “Vent/Flue Pipe” section for piping details.

Symptoms of Abnormal Operation	Diagnostic/ Status LED Code	Fault Description	Possible Causes	Corrective Actions	Notes and Cautions
■ Furnace fails to operate. ■ Integrated control module LED display provides “E1” error code.	E1	■ Low-stage pressure switch circuit is closed at start of heating cycle.	■ Low-stage pressure switch contacts sticking. ■ Shorts in pressure switch circuit wiring. ■ Board timing with PCBKF101 control board will detect a closed pressure switch after a failed ignition attempt and before the next attempt. May display a misleading E1 code.	■ Replace low-stage pressure switch. ■ Repair short in wiring. ■ Disregard E1 code shown between ignition attempts if furnace is equipped with PCBKF101 control board. Look for cause of no ignition—gas supply, gas control valve switch off, improper gas manifold pressure or improper L.P. conversion.	■ Turn off power prior to repair. ■ Replace pressure switch with correct replacement part. ■ The board checks for an open pressure switch when a call for heat is received. It will only power the inducer and proceed with the call for heat if the pressure switch is open.
■ Induced draft blower runs continuously with no further furnace operation. ■ Integrated control module LED display provides “E2” error code.	E2	■ Low-stage pressure switch circuit is not closed.	■ Pressure switch hose blocked, pinched or connected improperly. ■ Blocked flue and/or inlet air pipe, blocked drain system or weak induced draft blower. ■ Incorrect pressure switch setpoint or malfunctioning switch contacts. ■ Loose or improperly connected wiring.	■ Inspect pressure switch hose. Repair/ replace, if necessary. ■ Inspect flue and/or inlet air piping for blockage, proper length, elbows and termination. ■ Check drain system. Correct as necessary. ■ Check induced draft blower performance. Correct as necessary. ■ Correct pressure switch setpoint or contact motion. ■ Tighten or correct wiring connection.	■ Turn off power prior to repair. ■ Replace pressure switch with correct replacement part. ■ Replace induced draft blower with correct replacement part.
■ Circulator blower runs continuously. No furnace operation. ■ Integrated control module LED display provides “E3” error code.	E3	■ Primary limit or auxiliary limit circuit is open. ■ Rollout limit circuit is open.	■ Insufficient conditioned air over the heat exchanger. Blocked filters, restrictive ductwork, improper circulator blower speed, or failed circulator blower. ■ Flame rollout. ■ Misaligned burners, blocked flue and/or air inlet pipe or failed induced draft blower. ■ Loose or improperly connected wiring.	■ Check filters and ductwork for blockage. Clean filters or remove obstruction. ■ Check circulator blower speed and performance. Correct speed or replace blower if necessary. ■ Check burners for proper alignment. ■ Check flue and air inlet piping for blockage, proper length, elbows and termination. Correct as necessary. ■ Check induced draft blower for proper performance. Replace, if necessary. ■ Tighten or correct wiring connection.	■ Turn off power prior to repair. ■ See Specification Sheet applicable to your model for allowable rise range and proper circulator speed. ■ See “Vent/Flue Pipe” section for piping details.

Symptoms of Abnormal Operation	Diagnostic/ Status LED Code	Fault Description	Possible Causes	Corrective Actions	Notes and Cautions
■ Induced draft blower and circulator blower runs continuously. No furnace operation. ■ Integrated control module LED display provides “E4” error code.	E4	■ Flame sensed with no call for heat.	■ Short to ground in flame sense circuit. ■ Lingering burner flame. ■ Slow closing gas control valve.	■ Correct short at flame sensor or in flame sensor wiring. ■ Check for lingering flame. ■ Verify proper operation of gas control valve.	■ Turn off power prior to repair.
■ No furnace operation. ■ Integrated control module LED display provides “E5” error code.	E5	■ Open fuse.	■ Short in low voltage wiring.	■ Locate and correct short in low voltage wiring.	■ Turn off power prior to repair. ■ Replace fuse with 3A automotive fuse.
■ Furnace not operating. ■ Integrated control module LED display provides “E6” error code.	E6	■ Flame sense microamp signal is low.	■ Flame sensor is coated/oxidized. ■ Flame sensor incorrectly positioned in burner flame. ■ Lazy burner flame due to improper gas pressure or combustion air.	■ Sand flame sensor if coated/oxidized. ■ Inspect for proper sensor alignment. ■ Check inlet air piping for blockage, proper length, elbows and termination. ■ Compare current gas pressure to rating plate info. Adjust as needed.	■ Turn off power prior to repair. ■ Sand flame sensor with emery cloth. ■ See “Vent/Flue Pipe” section for piping details. ■ See rating plate for proper gas pressure.
■ Furnace operating on low stage gas with high stage induced draft blower. ■ High stage circulator blower (temperature, of conditioned air, lower than typical). ■ Integrated control module LED display provides “E7” error code.	E7	■ Problem with igniter circuit.	■ Improperly connected igniter. ■ Shorted igniter. ■ Poor unit ground. ■ Igniter relay fault on integrated control module.	■ Check and correct wiring from integrated control module to igniter. ■ Replace shorted igniter. ■ Check and correct furnace ground wiring. ■ Check igniter output from control. Replace, if necessary.	■ Turn off power prior to repair. ■ Replace igniter with correct replacement part. ■ Replace control with correct replacement part.
■ Furnace fails to operate on high stage. Furnace operates normally on low stage. ■ Integrated control module LED display provides “E8” error code.	E8	■ High-stage pressure switch circuit is closed at start of heating cycle. ■ Induced draft blower is operating. ■ Furnace is operating on low stage only.	■ High-stage pressure switch contacts sticking. ■ Shorts in pressure switch circuit wiring.	■ Replace high-stage pressure switch. ■ Repair short in wiring.	■ Turn off power prior to repair. ■ Replace pressure switch with correct replacement part.

Symptoms of Abnormal Operation	Diagnostic/ Status LED Code	Fault Description	Possible Causes	Corrective Actions	Notes and Cautions
■ Furnace fails to operate on high stage. Furnace operates normally on low stage. ■ Integrated control module LED display provides “E9” error code.	E9	■ High-stage pressure switch circuit is not closed. ■ Induced draft blower is operating. ■ Furnace is operating on low stage only.	■ Pressure switch hose blocked, pinched or connected improperly. ■ Blocked flue and/or inlet air pipe, blocked drain system or weak induced draft blower. ■ Incorrect pressure switch setpoint or malfunctioning switch contacts. ■ Loose or improperly connected wiring.	■ Inspect pressure switch hose. Repair, if necessary. ■ Inspect flue and/or inlet air piping for blockage, proper length, elbows and termination. Check drain system. Correct as necessary. ■ Check induced draft blower performance. Correct as necessary. ■ Correct pressure switch setpoint or contact motion. ■ Tighten or correct wiring connection.	■ Turn off power prior to repair. ■ Replace pressure switch with correct replacement part. ■ Replace induced draft blower with correct replacement part.
■ Furnace fails to operate. ■ Integrated control module LED display provides “EA” error code.	EA	■ Polarity of 115-volt AC is reversed.	■ Polarity of 115-volt AC power to furnace or integrated module is reversed. ■ Poor furnace ground.	■ Review wiring diagram to correct polarity. ■ Verify proper ground. Correct if necessary. ■ Check and correct wiring.	■ Turn off power prior to repair.
■ Furnace fails to operate. ■ Integrated control module LED display provides “d0” error code.	d0	■ Data not yet on network.	■ Furnace does not contain any shared data.	■ Populate shared data set using memory card.	■ Turn off power prior to repair. ■ Use memory card for the specific model. ■ Insert memory card before turning on power. Memory card may be removed after data is loaded. ■ Turn off power before removing memory card. ■ Error code will be cleared once data is loaded.
■ Operation different than expected or no operation. ■ Integrated control module LED display provides “d4” error code.	d4	■ Invalid memory card data.	■ Shared data set on memory card has been rejected by integrated control module.	■ Verify shared data set is correct for the specific model. Repopulate data using correct memory card, if required.	■ Turn off power prior to repair. ■ Use memory card for the specific model. ■ Insert memory card before turning on power. Memory card may be removed after data is loaded. ■ Turn off power before removing memory card. ■ Error code will be cleared once data is loaded.

Symptoms of Abnormal Operation	Diagnostic/ Status LED Code	Fault Description	Possible Causes	Corrective Actions	Notes and Cautions
■ Furnace fails to operate. ■ Integrated control module LED display provides “b0” error code.	b0	■ Circulator blower motor is not running when it should be running.	■ Loose wiring connection at circulator motor power leads or circulator motor power leads disconnected. ■ Open circuit in inductor or loose wiring connection at inductor (¾ Hp and 1 Hp models only). ■ Failed circulator blower motor.	■ Tighten or correct wiring connection. ■ Verify continuous circuit through inductor. Replace if open or short circuit. ■ Check circulator blower motor. Replace if necessary	■ Turn off power prior to repair. ■ Replace inductor with correct replacement part. ■ Replace circulator motor with correct replacement part.
■ Furnace fails to operate. ■ Integrated control module LED display provides “b1” error code.	b1	■ Integrated control module has lost communication with circulator blower motor.	■ Loose wiring connection at circulator motor control leads. ■ Failed circulator blower motor. ■ Failed integrated control module.	■ Tighten or correct wiring connection. ■ Check circulator blower motor. Replace if necessary. ■ Check integrated control module. Replace if necessary.	■ Turn off power prior to repair. ■ Replace circulator motor with correct replacement part. ■ Replace integrated control module with correct replacement part.
■ Furnace fails to operate. ■ Integrated control module LED display provides “b2” error code.	b2	■ Circulator blower motor horse power in shared data set does not match circulator blower motor horse power.	■ Incorrect circulator blower motor in furnace. ■ Incorrect shared data set in integrated control module.	■ Verify circulator blower motor horse power is the same specified for the specific furnace model. Replace if necessary. ■ Verify shared data set is correct for the specific model. Repopulate data using correct memory card, if required.	■ Turn off power prior to repair. ■ Replace motor with correct replacement part. ■ Use memory card for the specific model. ■ Insert memory card before turning on power. Memory card may be removed after data is loaded. ■ Turn off power before removing memory card. ■ Error code will be cleared once shared data and motor horse power match.
■ Furnace operates at reduced performance. ■ Airflow delivered is less than expected. ■ Integrated control module LED display provides “b3” error code.	b3	■ Circulator blower motor is operating in a power, temperature or speed limiting condition.	■ Blocked filters. ■ Restrictive ductwork. ■ Undersized ductwork. ■ High ambient temperatures.	■ Check filters for blockage. Clean filters or remove obstruction. ■ Check ductwork for blockage. Remove obstruction. Verify all registers are fully open. ■ Verify ductwork is appropriately sized for system. Resize/replace ductwork if necessary. ■ See “Product Description” and “Location Requirements and Considerations” for furnace installation requirements.	■ Turn off power prior to repair.

Symptoms of Abnormal Operation	Diagnostic/ Status LED Code	Fault Description	Possible Causes	Corrective Actions	Notes and Cautions
■ Furnace fails to operate. ■ Integrated control module LED display provides “b4” error code.	b4	■ Circulator blower motor senses a loss of rotor control. ■ Circulator blower motor senses high current.	■ Abnormal motor loading, sudden change in speed or torque, sudden blockage of furnace air inlet or outlet. ■ High loading conditions, blocked filters, very restrictive ductwork, blockage of furnace air inlet or outlet.	■ Check filters, filter grills/registers, duct system and furnace air inlet/outlet for blockages.	■ Turn off power prior to repair.
■ Furnace fails to operate. ■ Integrated control module LED display provides “b5” error code.	b5	■ Circulator blower motor fails to start 10 consecutive times.	■ Obstruction in circulator blower housing. ■ Seized circulator blower motor bearings. ■ Failed circulator blower motor.	■ Check circulator blower for obstructions. Remove and repair/replace wheel/motor, if necessary. ■ Check circulator blower motor shaft rotation and motor. Replace motor if necessary.	■ Turn off power prior to repair. ■ Replace motor with correct replacement part. ■ Replace wheel with correct replacement part.
■ Furnace fails to operate. ■ Integrated control module LED display provides “b6” error code.	b6	■ Circulator blower motor shuts down for over or under voltage condition. ■ Circulator blower motor shuts down due to over temperature condition on power module.	■ High AC line voltage to furnace. ■ Low AC line voltage to furnace. ■ High ambient temperatures.	■ Check power to furnace. Verify line voltage to furnace is within the range specified on the furnace rating plate. ■ See “Product Description” and “Location Requirements and Considerations” for furnace installation requirements.	■ Turn off power prior to repair.
■ Furnace fails to operate. ■ Integrated control module LED display provides “b7” error code.	b7	■ Circulator blower motor does not have enough information to operate properly. ■ Motor fails to start 40 consecutive times.	■ Error with integrated control module. ■ Motor has a locked rotor condition.	■ Check integrated control module. Verify control is populated with correct shared data set. See data errors above for details. ■ Check for locked rotor condition (see error code above for details).	■ Turn off power prior to repair. ■ Replace with correct replacement part(s). ■ Use memory card for the specific model.
■ Furnace operates at reduced performance or operates on low stage when high stage is expected. ■ Integrated control module LED display provides “b9” error code.	b9	■ Airflow is lower than demanded.	■ Blocked filters. ■ Restrictive ductwork. ■ Undersized ductwork.	■ Check filters for blockage. Clean filters or remove obstruction. ■ Check ductwork for blockage. Remove obstruction. Verify all registers are fully open. ■ Verify ductwork is appropriately sized for system. Resize/replace ductwork if necessary.	■ Turn off power prior to repair.

WARNING

HIGH VOLTAGE!

To avoid personal injury or death due to electrical shock, disconnect electrical power before performing any service or maintenance.

Switch			DIP Switch Number									
Bank	**Purpose**	**Function**	**1**	**2**	**3**	**4**	**5**	**6**	**7**	**8**	**9**	**10**
S1	Heat Off Delay	90 Seconds	Off	Off	---	---	---	---	---	---	---	---
		120 Seconds	On	Off	---	---	---	---	---	---	---	---
		150 Seconds*	Off	On	---	---	---	---	---	---	---	---
		180 Seconds	On	On	---	---	---	---	---	---	---	---
	Thermostat Setup	1-Stage T-Stat	---	---	Off	---	---	---	---	---	---	---
		2-Stage T-Stat	---	---	On	---	---	---	---	---	---	---
		5-Min Delay	---	---	---	Off	---	---	---	---	---	---
		Auto Delay	---	---	---	On	---	---	---	---	---	---
S2	Bus BIAS	BIAS	On*	On*	---	---	---	---	---	---	---	---
	TERM	Bus Termination	---	---	On*	---	---	---	---	---	---	---
S3	Cooling Speed Tap	A	Off	Off	---	---	---	---	---	---	---	---
		B	On	Off	---	---	---	---	---	---	---	---
		C	Off	On	---	---	---	---	---	---	---	---
		D*	On	On	---	---	---	---	---	---	---	---
	Adjust Taps	Normal*	---	---	Off	Off	---	---	---	---	---	---
		10%	---	---	On	Off	---	---	---	---	---	---
		-10%	---	---	Off	On	---	---	---	---	---	---
		Normal	---	---	On	On	---	---	---	---	---	---
S4	Ramping Profiles	A*	---	---	---	---	Off	Off	---	---	---	---
		B	---	---	---	---	On	Off	---	---	---	---
		C	---	---	---	---	Off	On	---	---	---	---
		D	---	---	---	---	On	On	---	---	---	---
	Heating Speed Tap	A	---	---	---	---	---	---	Off	Off	---	---
		B*	---	---	---	---	---	---	On	Off	---	---
		C	---	---	---	---	---	---	Off	On	---	---
		D	---	---	---	---	---	---	On	On	---	---
S5	DEHUM	Disabled*	---	---	---	---	---	---	---	---	Off	Unused
		Enabled	---	---	---	---	---	---	---	---	On	Unused

*Indicates factory setting

--- Not applicable

WIRING DIAGRAM

⚠ WARNING

HIGH VOLTAGE!

Disconnect ALL power before servicing.
Multiple power sources may be present.
Failure to do so may cause property damage, personal injury or death.

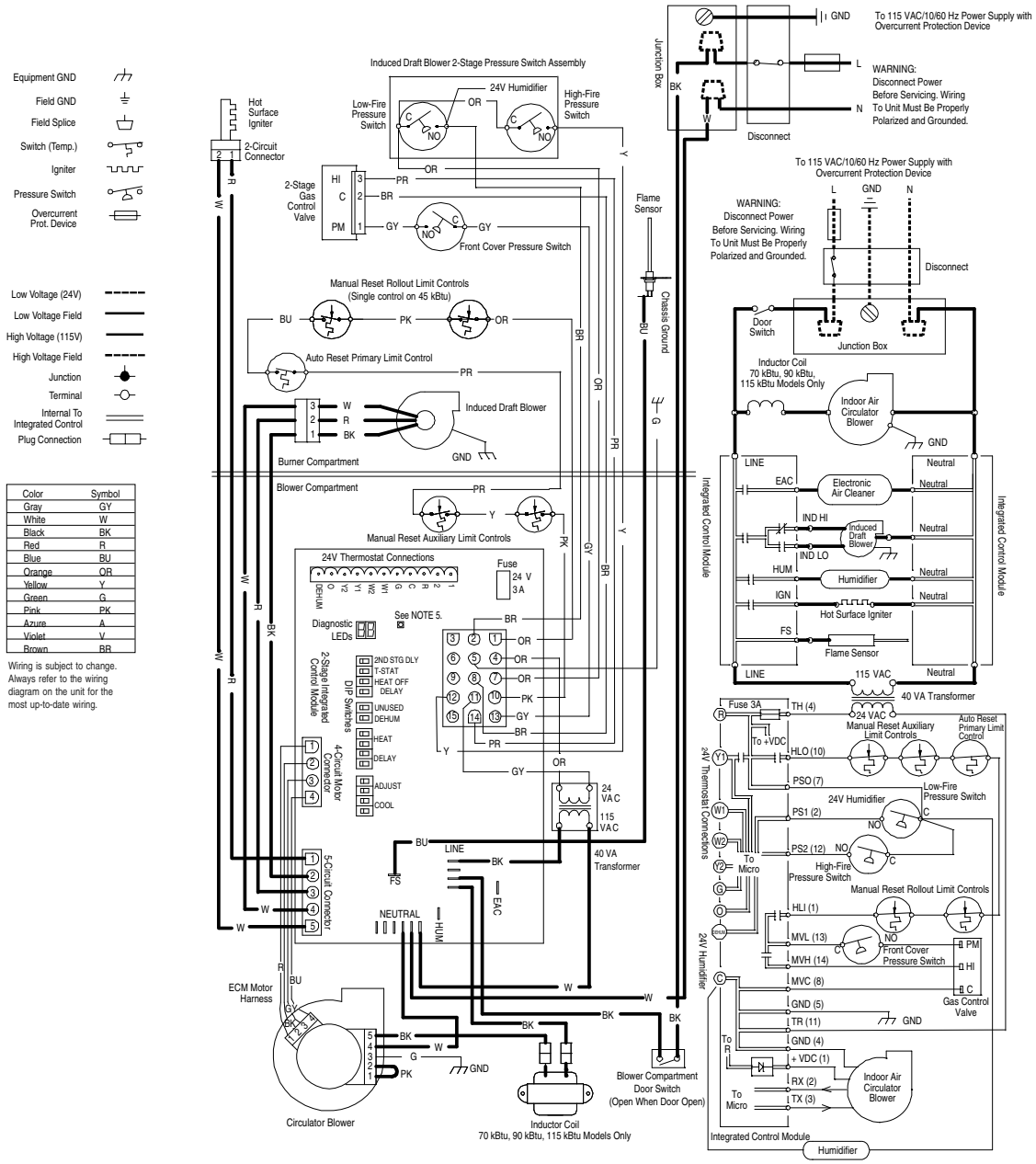

Check codes for proper wiring and circuit protection before installation.

NOTES:

1. Set heat anticipator on room thermostat at 0.7 amps.
2. Manufacturer's specified replacement parts must be used when servicing.
3. If any of the original wire as supplied with the furnace must be replaced, it must be replaced with wiring material having a temperature rating of at least 105ºC. Use copper conductors only.
4. Furnace must be permanently grounded and conform to NEC and local codes.
5. To recall the last 6 faults, most recent to least recent, depress switch for more than 2 seconds in standby (no thermostat inputs).

WIRING DIAGRAM

⚠ WARNING

HIGH VOLTAGE!

Disconnect ALL power before servicing.
Multiple power sources may be present.
Failure to do so may cause property damage, personal injury or death.

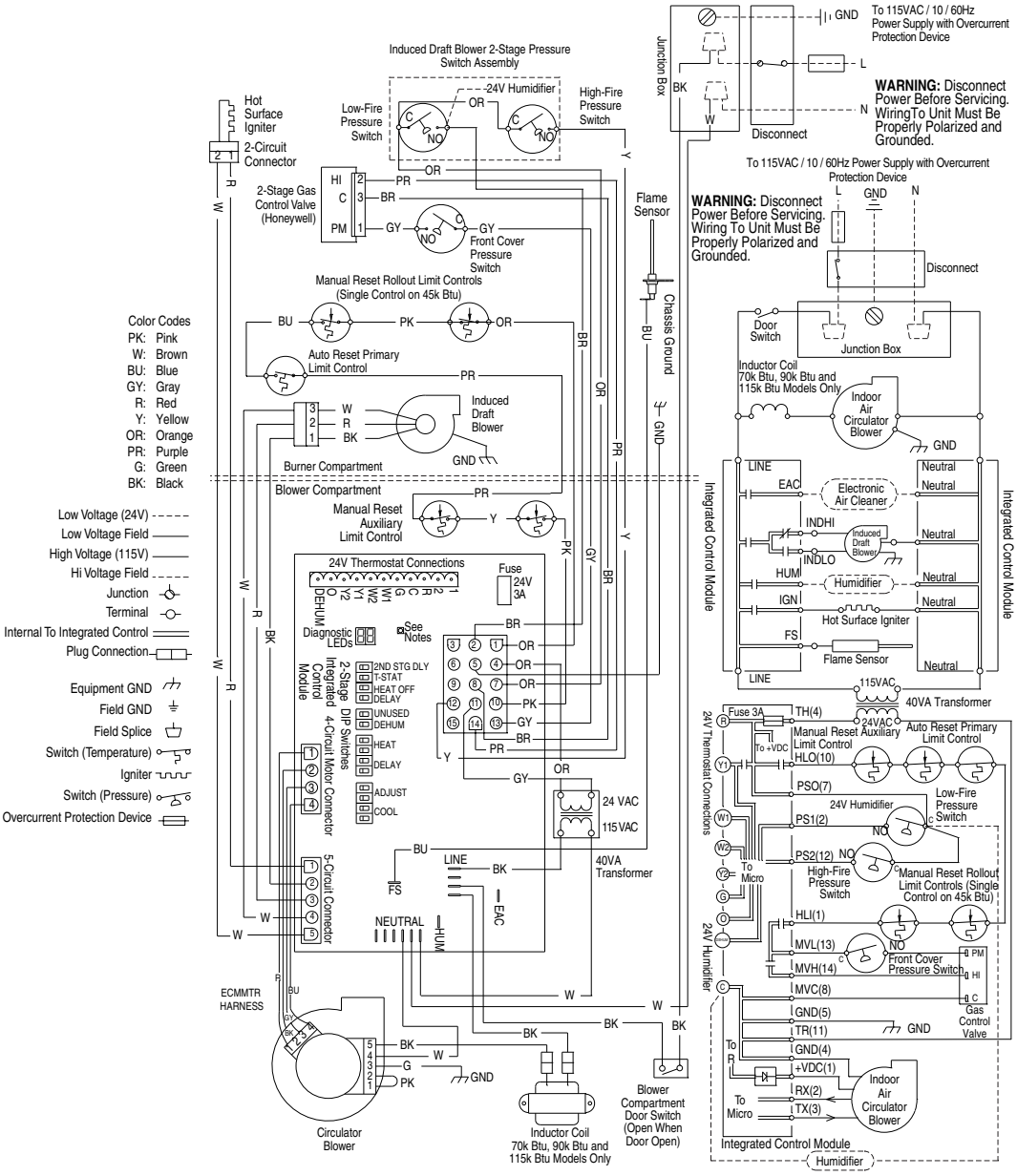

Check codes for proper wiring and circuit protection before installation.

NOTES:

1. Set heat anticipator on room thermostat at 0.7 amps.
2. Manufacturer's specified replacement parts must be used when servicing.
3. If any of the original wire as supplied with the furnace must be replaced, it must be replaced with wiring material having a temperature rating of at least 105ºC. Use copper conductors only.
4. Furnace must be permanently grounded and conform to NEC and local codes.
5. To recall the last 6 faults, most recent to least recent, depress switch for more than 2 seconds in standby (no thermostat inputs).

ASSISTANCE OR SERVICE

If you need further assistance, you can write to the below address with any questions or concerns:

Tradewinds Distributing Company, LLC
14610 Breakers Drive
Jacksonville, FL 32258

Please include a daytime phone number in your correspondence.

Or call toll free: 1-866-944-7575.

© 2011. All rights reserved.

®Registered Trademark/TM Trademark of Whirlpool, U.S.A.,
Manufactured under license by Tradewinds Distributing Company, LLC, Jacksonville, Florida.
Warranty provided by manufacturer. All other trademarks are owned by their respective companies.
COMFORT COMMITMENT is a trademark of Tradewinds Distributing Company, LLC.
5/11
Printed in U.S.A.