PACKAGE GAS ELECTRIC FURNACES INSTALLATION INSTRUCTIONS

ATTENTION INSTALLATION PERSONNEL

Prior to installation, thoroughly familiarize yourself with this instruction manual.
Observe all safety warnings.
During installation or repair, caution is to be observed.
It is your responsibility to install the product safely and to educate the customer on its safe use.

Keep this literature in a safe place for future reference.

These installation instructions cover the outdoor installation of single package gas electric heating and cooling units. See the Specification Sheets or Technical Manual applicable to your model for information regarding accessories. Please contact your distributor or our website for the applicable Specification Sheets referred to in this manual.

Whirlpool Gold® Model
WGGE43
WPIO-357A

Tradewinds Distributing Company, LLC
14610 Breakers Drive
Jacksonville, Florida 32258

TABLE OF CONTENTS

SAFETY INSTRUCTIONS **3**
TO THE INSTALLER **4**
IMPORTANT NOTE TO THE OWNER REGARDING PRODUCT WARRANTY **4**
REPLACEMENT PARTS **4**
UNIT LOCATION **4**
Ground Level Installations Only 5
Rooftop Installations Only 5
Roof Curb Installations Only 5
GENERAL INFORMATION **6**
TRANSPORTATION DAMAGE **6**
RIGGING DETAILS **6**
GAS PIPING **6**
High Altitude Derate—U.S. Installations Only 7
Check Gas Piping 8
ELECTRICAL WIRING **10**
Thermostat Location 10
Unit Voltage 11
Heat Anticipator Setting 11
CIRCULATING AIR AND FILTERS **11**
Airflow Conversion 11
Ductwork 11
Filters 12
VENTING **12**
CONDENSATE DRAIN **12**
Condensate Drain Connection 12
NORMAL SEQUENCES OF OPERATION **12**
Heating 12
Cooling 13
Fan Only 13
START-UP, ADJUSTMENTS, AND CHECKS **13**
Heating Start-Up 13
Pre-Operation Checks 13
Gas Supply Pressure Measurement 14
Gas Manifold Pressure Measurement and Adjustment 15
Gas Input Rate Check—Natural Gas Only 15
Main Burner Flame Check 16
Temperature Rise Check 16
External Static Pressure Check 16
Blower Speed Adjustments 16
Limit Check 16
UNIT SHUTDOWN **17**
COOLING START-UP **17**
Compressor Protection Devices 17
Cooling Refrigerant Charging 17
TROUBLESHOOTING **17**
Ignition Control Error Codes 17
Abnormal Operation—Heating 17
Abnormal Operation—Cooling 18
MAINTENANCE **18**
Filter Replacement or Cleaning 18
Cabinet Finish Maintenance 18
Clean Outside Coil—Qualified Servicer Only 18
Condenser, Evaporator and Induced Drafter Motors 18
Flame Sensor—Qualified Servicer Only 19
Flue Passages—Qualified Servicer Only 19
Cleaning Flue Passages—Qualified Servicer Only 19
Main Burner Flame—Qualified Servicer Only 19
Burner Flame 19
Cleaning Burners 19
ACCESSORIES AND FUNCTIONAL PARTS **20**
Sheet Metal Accessories 20
Functional Parts 20
General Information 20
APPENDIX **20**
Blower Performance Data—Single Phase 20
Ignition Control Diagnostic Indicator Chart 25
Heating Timing Chart 26
Cooling Timing Chart 26
Unit Dimensions 27
Minimum Clearances 27
Wiring Diagram—WGGE4324, 30, 36, 42 28
Wiring Diagram—WGGE4324, 30, 36, 42 29
Wiring Diagram—WGGE4348, 60 30
Wiring Diagram—WGGE4348, 60 31
ASSISTANCE OR SERVICE **32**

SAFETY INSTRUCTIONS

The following symbols and labels are used throughout this manual to indicate immediate or potential safety hazards. It is the owner's and installer's responsibility to read and comply with all safety information and instructions accompanying these symbols. Failure to heed safety information increases the risk of personal injury, property damage and/or product damage.

Recognize this symbol as a safety precaution.

WARNING

Hazards or unsafe practices could result in property damage, product damage, severe personal injury or death.

CAUTION

Hazards or unsafe practices may result in property damage, product damage, personal injury or death.

WARNING

Do not connect to or use any device that is not design-certified for use with this unit. Serious property damage, personal injury, reduced unit performance and/or hazardous conditions may result from the use of such non-approved devices.

WARNING

HIGH VOLTAGE!

Disconnect ALL power before servicing.

Multiple power sources may be present.

Failure to do so may cause property damage, personal injury or death.

WARNING

Should overheating occur or the gas supply fail to shut off, turn off the manual gas shutoff valve external to the furnace before turning off the electrical supply.

WARNING

This product contains or produces a chemical or chemicals which may cause serious illness or death and which are known to the State of California to cause cancer, birth defects or other reproductive harm.

WARNING

To prevent the risk of property damage, personal injury, or death, do not store combustible materials or use gasoline or other flammable liquids or vapors in the vicinity of this unit.

WARNING

To avoid property damage, personal injury or death, do not use this furnace if any part of the furnace has been under water. Immediately call a qualified service technician to inspect the furnace and to replace any part of the control system and any gas control having been under water.

WARNING

This unit must not be used as a "construction heater" during the finishing phases of construction on a new structure. This type of use may result in premature failure of the unit due to extremely low return air temperatures and exposure to corrosive or very dirty atmospheres.

WARNING

Installation and repair of this unit should be performed ONLY by individuals meeting the requirements of an "Entry Level Technician," at a minimum, as specified by the Air-Conditioning, Heating and Refrigeration Institute (AHRI). Attempting to install or repair this unit without such background may result in product damage, personal injury or death.

WARNING

If the information in these instructions is not followed exactly, a fire or explosion may result causing property damage, personal injury or loss of life.

— Do not store or use gasoline or other flammable vapors and liquids in the vicinity of this or any other appliance.

— WHAT TO DO IF YOU SMELL GAS

- **Do not try to light any appliance.**
- **Do not touch any electrical switch; do not use any phone in your building.**
- **Immediately call your gas supplier from a neighbor's phone. Follow the gas supplier's instructions.**
- **If you cannot reach your gas supplier, call the fire department.**

— Installation and service must be performed by a qualified installer, service agency or the gas supplier.

⚠ WARNING

Heating unit should not be utilized without reasonable, routine inspection, maintenance and supervision. If the building in which any such device is located will be vacant, care should be taken that such device is routinely inspected, maintained and monitored. In the event that the building may be exposed to freezing temperatures and will be vacant, all water-bearing pipes should be drained, the building should be properly winterized and the water source closed. In the event that the building may be exposed to freezing temperatures and will be vacant, any hydronic coil units should be drained as well, and, in such case, alternative heat sources should be utilized.

⚠ DANGER

CARBON MONOXIDE POISONING HAZARD

Special Warning for Installation of Furnace or Air Handling Units in Enclosed Areas such as Garages, Utility Rooms or Parking Areas.

Carbon monoxide producing devices (such as an automobile, space heater, gas water heater, etc.) should not be operated in enclosed areas such as unventilated garages, utility rooms or parking areas because of the danger of carbon monoxide (CO) poisoning resulting from the exhaust emissions. If a furnace or air handler is installed in an enclosed area such as a garage, utility room or parking area and a carbon monoxide producing device is operated therein, there must be adequate, direct outside ventilation.
This ventilation is necessary to avoid the danger of CO poisoning which can occur if a carbon monoxide producing device continues to operate in the enclosed area. Carbon monoxide emissions can be (re)circulated throughout the structure if the furnace or air handler is operating in any mode.

CO can cause serious illness including permanent brain damage or death.

TO THE INSTALLER

Before installing this unit, please read this manual to familiarize yourself on the specific items which must be adhered to, including maximum external static pressure to unit, air temperature rise, minimum or maximum CFM and motor speed connections.

IMPORTANT NOTE TO THE OWNER REGARDING PRODUCT WARRANTY

Your warranty certificate is supplied as a separate document with the unit installed by your contractor. Read the limited warranty certificate carefully to determine what is and is not covered. Keep the warranty certificate in a safe place. If you are unable to locate the warranty certificate, please contact your installing contractor, or contact customer service at 1-866-944-7575 to obtain a copy.

To receive the 10-Year Parts Limited Warranty, online registration must be completed within 60 days of installation. Online registration is not required in California or Quebec.

Full warranty details and instructions are available at www.whirlpoolhvac.com.

To register your unit, go to www.whirlpoolhvac.com. Click on the manufacturer's Comfort Commitment™ Warranty link located at the bottom center of the home page. Next, click on the Click Here to Register Your Product link located at the top center of the page, and complete the forms in the manner indicated.

REPLACEMENT PARTS

When reporting shortages or damages, or ordering repair parts, give the complete product model and serial numbers as stamped on the unit's nameplate. Replacement parts for this product are available through your contractor or local distributor. For the location of your nearest distributor, consult the white business pages, the yellow page section of the local telephone book or contact:

Tradewinds Distributing Company, LLC
14610 Breakers Drive
Jacksonville, Florida 32258
1-866-944-7575

If you are replacing an air handler, the system must be manufacturer-approved and Air-Conditioning, Heating, and Refrigeration Institute (AHRI) matched.

NOTE: Installation of unmatched systems is strongly discouraged.

UNIT LOCATION

⚠ WARNING

To prevent possible equipment damage, property damage, personal injury or death, the following bullet points must be observed when installing the unit.

- For proper flame pattern within the heat exchanger and proper condensate drainage, the unit must be mounted level.
- The flue outlet hood must be at least 12" (30.5 cm) from any opening through which flue gases could enter a building, and at least 36" (91.4 cm) above any forced air inlet located within 10 ft (3 m). The economizer/manual fresh air intake/motorized fresh air intake and combustion air inlet mounted on the unit are not affected by this restriction.

- To avoid possible corrosion of the heat exchanger, do not locate the unit in an area where the outdoor air (for example, combustion air for the unit) will be frequently contaminated by compounds containing chlorine or fluorine. Common sources of such compounds include swimming pool chemicals and chlorine bleaches, paint stripper, adhesives, paints, varnishes, sealers, waxes (which are not yet dried) and solvents used during construction and remodeling. Various commercial and industrial processes may also be sources of chlorine/fluorine compounds.
- To avoid possible illness or death of the building occupants, do not locate outside air intake device (economizer, manual fresh air intake, motorized fresh air intake) too close to an exhaust outlet, gas vent termination or plumbing vent outlet. For specific distances required, consult local codes.
- Allow minimum clearances from the enclosure for fire protection, proper operation, and service access. These clearances must be permanently maintained.
- The combustion air inlet and flue outlet hoods on the unit must never be obstructed. If used, do not allow the economizer/manual fresh air damper/ motorized fresh air damper to become blocked by snow or debris. In some climates or locations, it may be necessary to elevate the unit to avoid these problems.
- When the unit is heating, the temperature of the return air entering the unit must be between 50°F and 100°F (10ºC and 37.8ºC).

Ground Level Installations Only

- When the unit is installed on the ground adjacent to the building, a level concrete (or equal) base is recommended. Prepare a base that is 3" (7.6 cm) larger than the package unit footprint and a minimum of 3" (7.6 cm) thick.
- The base should also be located where no runoff of water from higher ground can collect in the unit.

Ground Level Installation

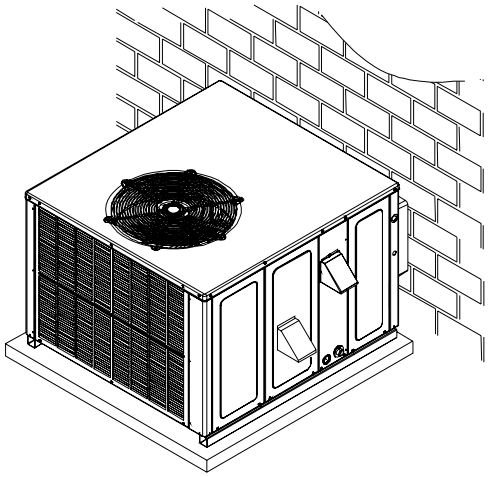

Rooftop Installations Only

NOTE: To ensure proper condensate drainage, unit must be installed in a level position.

- To avoid possible property damage or personal injury, the roof must have sufficient structural strength to carry the weight of the unit(s) and snow or water loads as required by local codes. Consult a structural engineer to determine the weight capabilities of the roof.

Rooftop Installation

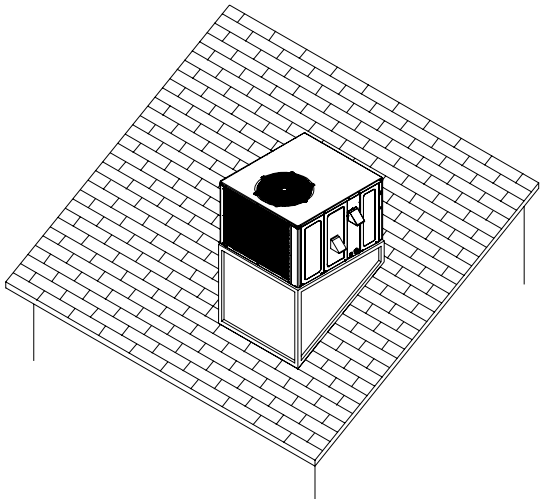

- The unit may be installed directly on wood floors or on Class A, Class B, or Class C roof covering material.
- To avoid possible personal injury, a safe, flat surface for service personnel should be provided.

Roof Curb Installations Only

- Sufficient structural support must be determined prior to locating and mounting the curb and package unit.
- Ductwork must be constructed using industry guidelines. The ductwork must be placed into the roof curb before mounting the package unit.
- Curb insulation, cant strips, flashing and general roofing material are furnished by the contractor.

Roof Curb Installation

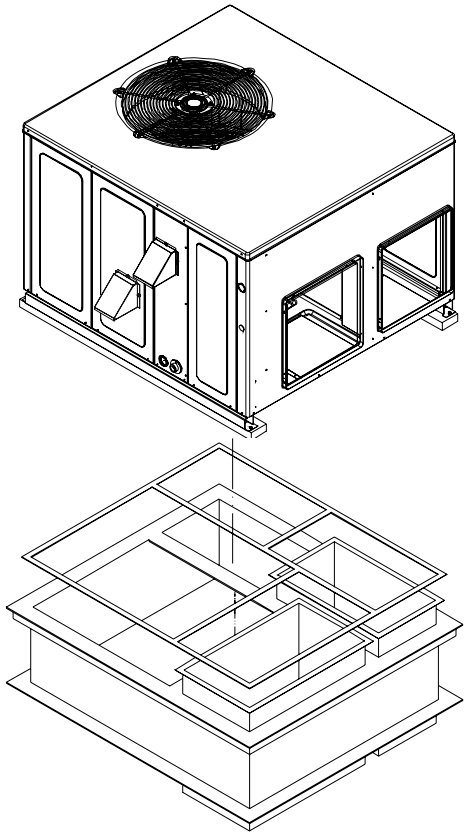

GENERAL INFORMATION

⚠ WARNING

To prevent property damage, personal injury or death, due to fire, explosions, smoke, soot, condensation, electric shock or carbon monoxide, this unit must be properly installed, repaired, operated and maintained.

This unit is approved for outdoor installation only. To assure that your unit operates safely and efficiently, it must be installed, operated, and maintained in accordance with these installation and operating instructions, all local building codes and ordinances, or in their absence, with the latest edition of the National Fuel Gas Code NFPA54/ANSI Z223.1 and National Standard of Canada CAN/CSA B149 Installation Codes.

The heating and cooling capacities of the unit should be greater than or equal to the design heating and cooling loads of the area to be conditioned. The loads should be calculated by an approved method or in accordance with A.S.H.R.A.E. Guide or Manual J - Load Calculations published by the Air Conditioning Contractors of America.

Obtain from:

American National Standards Institute
430 Broadway
New York, NY 10018

TRANSPORTATION DAMAGE

Check the carton upon arrival for external damage. If damage is found, a request for inspection by carrier agent should be made in writing immediately.

Carefully inspect the unit for damage including damage to the cabinetry. Any bolts or screws which may have loosened in transit must be retightened. In the event of damage, the receiver should:

1. Make notation on delivery receipt of any visible damage to shipment or container.
2. Notify carrier promptly and request an inspection.
3. In case of concealed damage, carrier should be notified as soon as possible—preferably within 5 days.
4. File the claim with the following supporting documents:
   - **a)** Original Bill of Lading, certified copy, or indemnity bond.
   - **b)** Original paid freight bill or indemnity in lieu thereof.
   - **c)** Original invoice or certified copy thereof, showing trade and other discounts or reductions.
   - **d)** Copy of the inspection report issued by carrier representative at the time damage is reported to the carrier. The carrier is responsible for making prompt inspection of damage and for a thorough investigation of each claim. The distributor or manufacturer will not accept claims from dealers for transportation damage.

NOTE: When inspecting the unit for transportation damage, remove all packaging materials. Recycle or dispose of the packaging material according to local codes.

RIGGING DETAILS

⚠ WARNING

To prevent property damage, the unit should remain in an upright position during all rigging and moving operations. To facilitate lifting and moving when a crane is used, place the unit in an adequate cable sling.

IMPORTANT: If using the bottom discharge with the roof curb, the ductwork should be attached to the curb prior to installing the unit. Ductwork dimensions are shown in the roof curb installation instructions.

Refer to “Roof Curb Installations Only” for the proper curb installation. Curbing must be installed in compliance with the National Roofing Contractors Association Manual.

Lower the unit carefully onto the roof mounting curb. While rigging the unit, the center of gravity will cause the condenser end to be lower than the supply air end.

Rigging

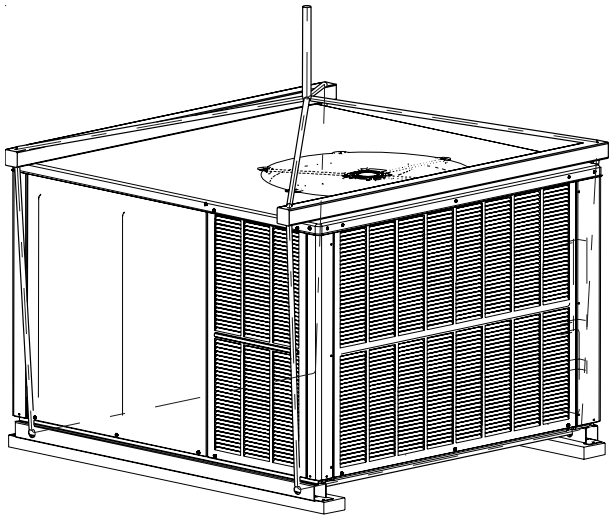

GAS PIPING

IMPORTANT NOTE: This unit is factory set to operate on natural gas at the altitudes shown on the rating plate.

⚠ WARNING

To avoid property damage, personal injury or death when either using propane gas alone or at higher altitudes, obtain and install the proper conversion kit(s). Failure to do so can result in unsatisfactory operation and/or equipment damage. High altitude kits are for U.S. installations only and are not approved for use in Canada.

The rating plate is stamped with the model number, type of gas and gas input rating. Make sure the unit is equipped to operate on the type of gas available. Conversion to LP gas is permitted with the use of the factory-authorized conversion kit LPM-03.

NOTES:

- LPT-00A may be used on models with AA revisions.
- LPT-03 is compatible with both the White Rodgers and the Honeywell gas control valves.

NOTE: Inlet gas pressure must not exceed the maximum value shown in the Inlet Gas Pressure chart.

Inlet Gas Pressure	
Natural	Minimum: 5.0" W.C. Maximum: 10.0" W.C.
Propane	Minimum: 11.0" W.C. Maximum: 13.0" W.C.

The minimum supply pressure should not vary from that shown in the Inlet Gas Pressure chart, because this could prevent the unit from having dependable ignition. In addition, gas input to the burners must not exceed the rated input shown on the rating plate. Overfiring of the unit could result in premature heat exchanger failure.

High Altitude Derate—U.S. Installations Only

IMPORTANT: The gas/electric units naturally derate with altitude. Do not attempt to increase the firing rate by changing orifices or increasing the manifold pressure. This can cause poor combustion and equipment failure. At all altitudes, the manifold pressure must be within 0.3" W.C. of that listed on the nameplate for the fuel used. At all altitudes and with either fuel, the air temperature rise must be within the range listed on the unit nameplate.

Refer to the installation manual provided with the LP kit for conversion from Natural gas to propane gas and for altitude adjustments.

NOTE: Up to 7,000 ft (2,134 m), no changes are required; above 7,000 ft (2,134 m), refer to High Altitude Kit HA-02.

IMPORTANT NOTE: To avoid possible unsatisfactory operation or equipment damage due to under firing of equipment, do not undersize the Natural/propane gas piping from the meter/tank to the unit. When sizing a trunk line, include all appliances on that line that could be operated simultaneously.

The rating plate is stamped with the model number, type of gas and gas input rating. Make sure that the unit is equipped to operate on the type of gas available. The gas line installation must comply with local codes, or in the absence of local codes, with the latest edition of the National Fuel Gas Code NFPA 54/ ANSI Z223.1.

Natural Gas Connection

Natural Gas Capacity of Pipe in Cu Ft (m^3) of Gas Per Hour (CFH)

Length of Pipe—ft (m)	Nominal Black Pipe Size				
	½"	¾"	1"	1¼"	1½"
10 (3)	132	278	520	1,050	1,600
20 (6.1)	92	190	350	730	1,100
30 (9.2)	73	152	285	590	980
40 (12.2)	63	130	245	500	760
50 (15.2)	56	115	215	440	670
60 (18.3)	50	105	195	400	610
70 (21.3)	46	96	180	370	560
80 (24.4)	43	90	170	350	530
90 (27.4)	40	84	160	320	490
100 (30.5)	38	79	150	305	460

Pressure = 0.50 psig or less and pressure drop of 0.3" W.C. (Based on 0.60 specific gravity gas)

$$\text{CFH} = \frac{\text{Btu/h Unit Input}}{\text{Heating Value of Gas (Btu/Cu Ft)}}$$

Refer to the "Proper Piping Practice" illustration for the general layout at the unit. The following rules apply:

1. Use black iron pipe and fittings for the supply piping. The use of a flex connector and/or copper piping is permitted as long as it is in agreement with local codes.
2. Use pipe joint compound on male threads only. Pipe joint compound must be resistant to the action of the fuel used.
3. Use ground joint unions.
4. Install a drip leg to trap dirt and moisture before it can enter the gas control valve. The drip leg must be a minimum of 3" (7.6 cm) long.
5. Use 2 pipe wrenches when making the connection to the gas control valve to keep the valve from turning.
6. Install a manual shutoff valve in a convenient location (within 6 ft [1.8 m] of the unit) between the meter and the unit.
7. Tighten all joints securely.
8. The unit must be connected to the building piping by one of the following methods:
   - Rigid metallic pipe and fittings
   - Semirigid metallic tubing and metallic fittings (aluminum alloy tubing must not be used in exterior locations)
   - Listed gas appliance connectors used in accordance with the terms of their listing that are completely in the same room as the equipment
   - The connector or tubing must be protected against physical and thermal damage. Aluminum alloy tubing and connectors must be coated to avoid external corrosion when in contact with masonry, plaster or insulation or are subject to repeated wettings by liquids (water—not rainwater, detergents or sewage).

Proper Piping Practice

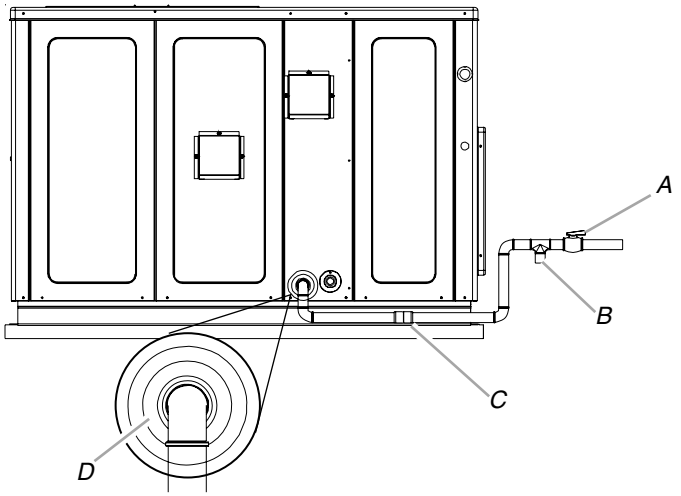

A. Manual shutoff valve
B. Drip leg
C. Ground joint union (installed upstream of gas control valve)
D. Grommet

NOTE: The unit gas supply entrance is factory sealed with plugs. Keep plugs in place until gas supply is ready to be installed. Once ready, replace the plugs with the supplied grommets and install gas supply line.

⚠ CAUTION

To prevent property damage or personal injury due to fire, the following instructions must be performed regarding gas connections and pressure testing:
-The unit and its gas connections must be leak tested before placing in operation. Because of the danger of explosion or fire, never use a match or open flame to test for leaks. Never exceed specified pressures for testing. Higher pressure may damage gas control valve and cause overfiring which may result in premature heat exchange failure.
-The unit and its gas shutoff valve must be disconnected from the gas supply during any pressure testing of that system at test pressures in excess of ½ psig (3.48 kPa).
-This unit must be isolated from the gas supply system by closing its manual shutoff valve during any pressure testing of the gas supply piping system at test pressures equal to or less than ½ psig (3.48 kPa).

⚠ WARNING

To avoid property damage or personal injury, be sure there is NO OPEN FLAME in the vicinity during air bleeding.

There will be air in the gas supply line after testing for leaks on a new installation. Therefore, the air must be bled from the line by loosening the ground joint union until pure gas is expelled. Tighten the ground joint union and wait for 5 minutes until all gas has been dissipated in the air. Be certain there is no open flame in the vicinity during air bleeding procedure. The unit is placed in operation by closing the main electrical disconnect switch for the unit.

⚠ WARNING

To avoid property damage, personal injury or death due to fire or explosion caused by a propane gas leak, install a gas detecting warning device. Since rust can reduce the level of odorant in propane gas, a gas detecting warning device is the only reliable way to detect a propane gas leak. Contact a local propane gas supplier about installing a gas detecting warning device.

NOTE: Propane gas conversion kits must be installed to convert units to propane gas.

A gas detecting warning system is the only reliable way to detect a propane gas leak. Rust can reduce the level of odorant in propane gas. Do not rely on your sense of smell. Contact a local propane gas supplier about installing a gas detecting warning system.

All propane gas equipment must conform to the safety standards of the National Board of Fire Underwriters, NBFU Manual 58.

For satisfactory operation, propane gas supply pressure must be within 9.7" W.C. to 10.3" W.C. at the furnace manifold with all gas appliances in operation.

Maintaining proper gas pressure depends on 3 main factors:

- Vaporization rate, depending on the temperature of the liquid and the wetted surface area of the container or containers.
- Proper pressure regulation. Two-stage regulation is recommended for both cost and efficiency.
- Pressure drop in the lines between the regulators, and between 2nd stage regulator and the appliance. Pipe size required will depend on the length of the pipe run and the total load of all appliances.

Tanks and Piping

Complete information regarding tank sizing for vaporization, recommended regulator settings, and pipe sizing is available from most regulator manufacturers and propane gas suppliers.

Since propane gas will quickly dissolve white lead and most standard commercial compounds, special pipe dope must be used. Shellac-based compounds resistant to the actions of liquefied petroleum gases are satisfactory.

Propane Gas Installation—Typical

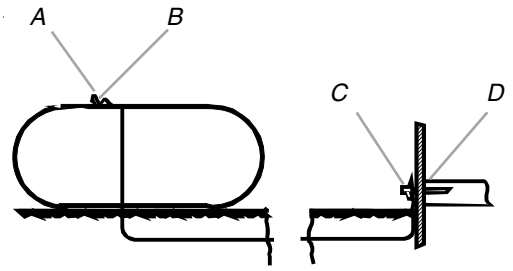

A. 1st stage regulator
B. 5 to 15 psig (20 psig maximum)
C. 2nd stage regulator
D. Continuous 11" W.C.

NOTE: 200 psig maximum tank pressure.

Sizing Between 1st and 2nd Stage Regulator*

Maximum propane capacities listed are based on 1 psig pressure drop at 10 psig setting. Capacities in 1,000 Btu/h.

Propane Gas Pipe Sizing Chart I

Pipe or Tubing Length—ft (m)	Tubing Size, O.D., Type L					Nominal Pipe Size, Schedule 40	
	⅜"	½"	⅝"	¾"	⅞"	½"	¾"
30 (9.2)	309	700	1,303	2,205	3,394	1,843	3,854
40 (12.2)	265	599	1,115	1,887	2,904	1,577	3,298
50 (15.2)	235	531	988	1,672	2,574	1,398	2,923
60 (18.3)	213	481	896	1,515	2,332	1,267	2,649
70	196	446	824	1,394	2,146	1,165	2,437
80 (24.4)	182	412	767	1,297	1,996	1,084	2,267
90	171	386	719	1,217	1,873	1,017	2,127
100 (30.5)	161	365	679	1,149	1,769	961	2,009
150 (45.7)	130	293	546	923	1,421	772	1,613
200 (61)	111	251	467	790	1,216	660	1,381
250	90	222	414	700	1,078	585	1,224
300	89	201	378	634	976	530	1,109
350	82	185	345	584	898	488	1,020
400	76	172	321	543	836	454	949

To convert to capacities at 15 psig settings—multiply by 1.13. To convert to capacities at 5 psig settings—multiply by 0.879.

Sizing Between Single or 2nd Stage Regulator and Appliance*

Maximum propane capacities listed are based on ½" W.C. pressure drop at 11" W.C. setting. Capacities in 1,000 Btu/h.

Propane Gas Pipe Sizing Chart II

Pipe or Tubing Length—ft (m)	Tubing Size, O.D. Type L					Nominal Pipe Size Schedule 40				
	⅜"	½"	⅝"	¾"	⅞"	½"	¾"	1"	1¼"	1½"
10 (3)	49	110	206	348	539	291	608	1,146	2,353	3,525
20 (6.1)	34	76	141	239	368	200	418	788	1,617	2,423
30 (9.2)	27	61	114	192	296	161	336	632	1,299	1,946
40 (12.2)	23	52	97	164	253	137	284	541	1,111	1,665
50 (15.2)	20	46	86	146	224	122	255	480	985	1,476
60 (18.3)	19	42	78	132	203	110	231	436	892	1,337
80 (24.4)	16	36	67	113	174	94	198	372	764	1,144
100 (30.5)	14	32	59	100	154	84	175	330	677	1,014
125 (38.1)	12	28	52	89	137	74	155	292	600	899
150 (45.7)	11	26	48	80	124	67	141	265	544	815
200 (61)	10	22	41	69	106	58	120	227	465	697
250 (76.2)	9	19	36	61	94	51	107	201	412	618
300	8	18	33	55	85	46	97	182	374	560
350	7	16	30	51	78	43	89	167	344	515
400	7	15	28	47	73	40	83	156	320	479

Data in accordance with NFPA pamphlet Number 54.

⚠ WARNING

To prevent property damage or serious personal injury due to fire or explosion caused by a propane gas leak, install a gas detecting warning device.
If the propane gas unit is installed in an excavated area or a confined space, a warning device is required due to:
- **Propane gas is heavier than air and any leaking gas can settle in any low areas or confined spaces.**
- **Propane gas odorant may fade, making the gas undetectable except with a warning device.**

ELECTRICAL WIRING

Thermostat Location

Mount the thermostat approximately 5 ft (1.5 m) above the floor, in an area that has an inside, vibration-free wall and has good air circulation.

Movement of air must not be obstructed by furniture, door, draperies, etc. The thermostat must not be mounted where it will be affected by drafts, hot or cold water pipes or air ducts in walls, radiant heat from fireplace, lamps, the sun, television, etc. Consult the Instruction Sheet packaged with the thermostat for mounting instructions.

All units have 1 stage of heating and 1 stage of mechanical cooling. Units which will have economizers may use thermostats with 1 or 2 stages of cooling.

⚠ WARNING

HIGH VOLTAGE!

Disconnect ALL power before servicing.

Multiple power sources may be present.

Failure to do so may cause property damage, personal injury or death.

The units are designed for operation on 60 hertz current and at voltages as shown on the rating plate. All internal wiring in the unit is complete. It is necessary to bring in the power supply to the contactor as shown on the unit wiring diagram which is supplied with each unit. 24-volt wiring must be connected between the unit control panel and the room thermostat.

Low Voltage Wiring

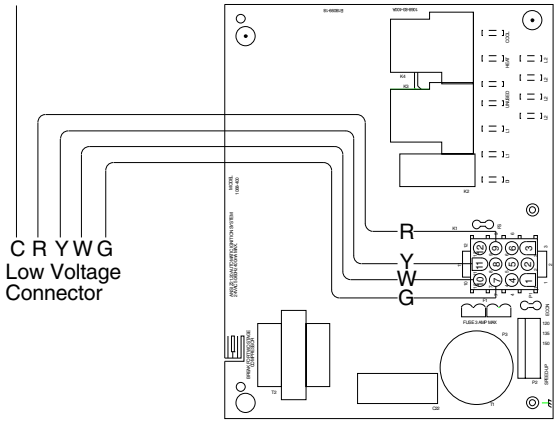

Refer to the unit wiring diagram for electrical connections. When installed, the unit must be electrically grounded in accordance with local codes or in the absence of local codes, with the National Electrical Code, ANSI/NFPA No. 70, and/or the CSA C22.1 Electrical Code. Ensure that the low voltage connections are waterproof.

⚠ WARNING

To avoid the risk of electrical shock, wiring to the unit must be polarized and grounded.

⚠ WARNING

To avoid the risk of fire or equipment damage, use copper conductors.

⚠ CAUTION

Label all wires prior to disconnection when servicing controls. Wiring errors can cause improper and dangerous operation. Verify proper operation after servicing.

For unit protection, use a time-delay fuse or HACR circuit breaker that is in excess of the circuit ampacity, but less than or equal to the maximum overcurrent protection device.

IMPORTANT: Do not exceed the maximum overcurrent device size shown on the unit data plate.

All line voltage connections must be made through weatherproof fittings. All exterior power supply and ground wiring must be in approved weatherproof conduit. Low voltage wiring from the unit control panel to the thermostat requires coded cable.

Electrical Power Directly to Junction Box

NOTE: Junction box location shown is optional and is for illustration purposes only.

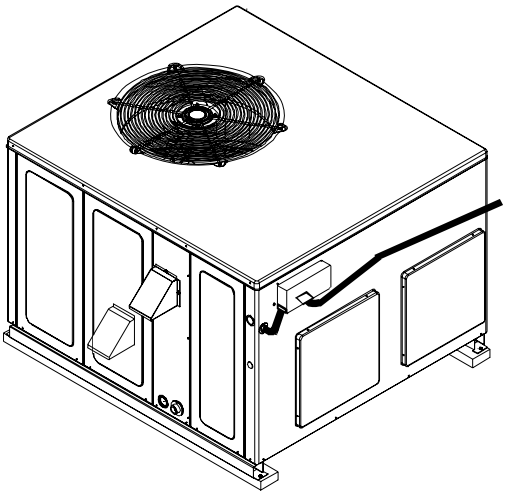

Electrical Power Routed Through Bottom of Unit

NOTE: Junction box location shown is optional and is for illustration purposes only.

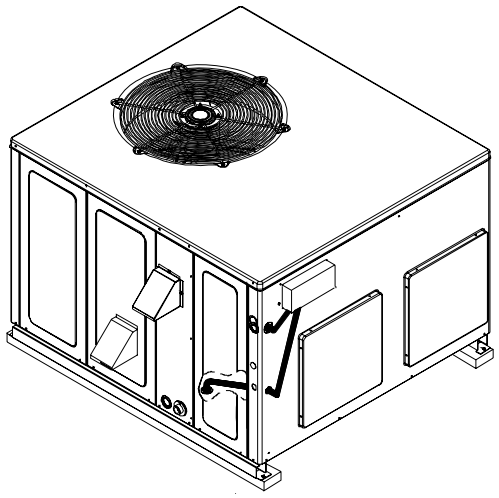

Unit Voltage

The unit transformer is factory-connected for 230V operation. If the unit is to operate on 208V, reconnect the transformer primary lead as shown on the unit wiring diagram.

Heat Anticipator Setting

The heat anticipator is to be set by measuring the load (amperage) at the R circuit. Follow the instructions provided by the thermostat for more details.

Typical Thermostat and Unit 24V Wiring Hookup

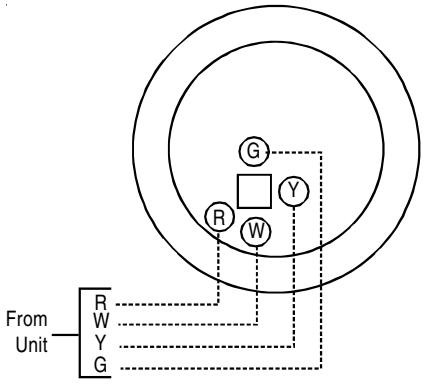

CIRCULATING AIR AND FILTERS

Airflow Conversion

Units can easily be converted from horizontal to down-discharge airflow delivery. In down-discharge or high-static installations, the installer should measure the total external static and review the blower performance charts before performing the installation. In some installations, it will be necessary to change the blower speed to provide proper airflow.

Duct Cover Installations—Down-Discharge

Remove the panels for down-discharge duct applications

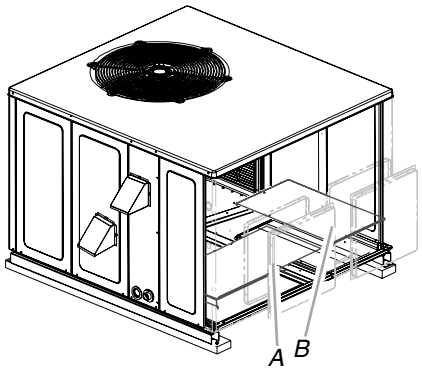

A. Supply air panel
B. Return air panel

Down-Discharge Applications

Cut insulation around bottom openings and remove panels from the bottom of the unit, saving the screws holding the panels in place.

NOTE: Single-phase models require installation of horizontal duct kit #20464501PDGK (medium chassis) and #20464502PDGK (large chassis).

Ductwork

Duct systems and register sizes must be properly designed for the C.F.M. and external static pressure rating of the unit. Ductwork should be designed in accordance with the recommended methods of Air Conditioning Contractors of America Manual D (Residential) or Manual Q (Commercial).

All ductwork exposed to the outdoors must include a weatherproof barrier and adequate insulation. A duct system should be installed in accordance with Standards of the National Board of Fire Underwriters for the Installation of Air Conditioning, Warm Air Heating and Ventilating Systems. Pamphlets No. 90A and 90B.

The supply duct from the unit through a wall may be installed without clearance. However, minimum unit clearances must be maintained. The supply duct should be provided with an access panel large enough to inspect the air chamber downstream of the heat exchanger. A cover should be tightly attached to prevent air leaks.

For duct flange dimensions on the unit, refer to the Unit Dimension illustration in the Appendix.

For down-discharge applications, the ductwork should be attached to the roof curb prior to installing the unit. Ductwork dimensions are shown in the roof curb installation manual.

If desired, supply and return duct connections to the unit may be made with flexible connections to reduce possible unit operating sound transmission.

Filters

CAUTION

To prevent property damage due to fire and loss of equipment efficiency or equipment damage due to dust and lint build up on internal parts, never operate unit without an air filter installed in the return air system.

Even though a return air filter is not supplied with this unit, there must be a means of filtering all return air. All units may be externally filtered.

Refer to the unit filter size chart in the Appendix for filter size information.

Filters installed external to the unit should be sized in accordance with their manufacturer recommendations. A throwaway filter must be sized for a maximum face velocity of 300 ft per minute.

Filter Installation

IMPORTANT: When installing a filter, the airflow arrows on the filter must point toward the circulator blower.

VENTING

Install the flue exhaust hood, screen and lower flue hood prior to operation of the unit.

To install the flue hood cover, please refer to IO-653*, included in the flue hood assembly box located in the blower compartment.

Flue Hood and Bug Screen Installation

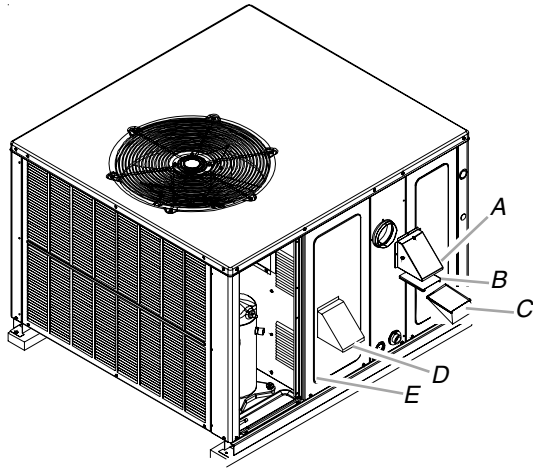

A. Flue exhaust hood
B. Screen
C. Lower flue hood
D. Combustion air intake hood
E. Heat exchanger door

CONDENSATE DRAIN

Condensate Drain Connection

A ¾" (1.9 cm) NPT drain connection is supplied for condensate piping. An external trap must be installed for proper condensate drainage.

Drain Connection

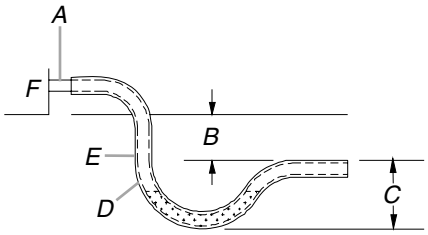

A. Drain connection
B. 2" (5.1 cm) minimum
C. 3" (7.6 cm) minimum
D. Positive liquid seal (required)
E. Flexible tubing, hose or pipe
F. Unit

NORMAL SEQUENCES OF OPERATION

Heating

This unit is equipped with an ignition control that automatically lights the main burner.

NOTE: Do not attempt to light the main burners by any other method.

1. Thermostat calls for heat. The induced draft blower energizes for a 15-second pre-purge.
2. The spark igniter and gas control valve energizes for 7 seconds.

   NOTE: The igniter produces a very intense electrical spark that ignites the gas.
3. The 30-second Heat Fan On delay time begins.
4. The unit delivers heat to the conditioned space until the thermostat is satisfied.
5. The gas control valve de-energizes. The induced draft blower continues operation for a 29-second post-purge.
6. Ignition control begins timing the Heat Fan Off delay. There is an adjustable Heat Fan Off delay of approximately 120/135/150 seconds (factory-set at 150). After the Heat Fan Off delay time has elapsed, the blower will de-energize. This allows any additional heat in the heat exchanger to be transferred to the conditioned space.

Cooling

1. Thermostat calls for cooling. The compressor and outdoor fan are energized.
2. Approximately 7 seconds later, the indoor fan starts.
3. The unit will deliver cooling to the conditioned space until the thermostat is satisfied.
4. The compressor and outdoor fan will be de-energized when the thermostat opens.
5. The indoor fan continues to run for approximately 60 seconds after the thermostat is satisfied. This allows additional cooling from the indoor coil to be transferred to the conditioned space. Then, the indoor fan stops.

   NOTE: A 180-second anti-short cycle is integral to the control and prevents recycling of the compressor.

Fan Only

1. Thermostat calls for Fan Only by energizing G.
2. Approximately 7 seconds later, the indoor fan starts.
3. The indoor fan continues to run for approximately 60 seconds after G is de-energized.

START-UP, ADJUSTMENTS, AND CHECKS

Heating Start-Up

This unit is equipped with an electronic ignition device to automatically light the main burners. It also has a power vent blower to exhaust combustion products.

On new installations, or if a major component has been replaced, the operation of the unit must be checked.

Check unit operation as outlined in the following instructions. If any sparking, odors or unusual sounds are encountered, shut off electrical power and recheck for wiring errors or obstructions in or near the blower motors. Duct covers must be removed before operating unit.

Heat Anticipator Setting

Set the heat anticipator on the room thermostat to 0.4 amps to obtain the proper number of heating cycles per hour and to prevent the room temperature from overshooting the room thermostat setting.

Rollout Protection Control

The rollout protection device opens, cutting power to the gas control valve, if the flames from the burners are not properly drawn into the heat exchanger. The rollout protection device is located on the burner bracket. The reason for elevated temperatures at the control should be determined and repaired prior to resetting this manual reset control.

⚠ WARNING

To avoid property damage, personal injury or death due to fire or explosion, a qualified servicer must investigate the reason for the rollout protection device to open before manually resetting the rollout protection device.

Rollout Protection on Burner Bracket

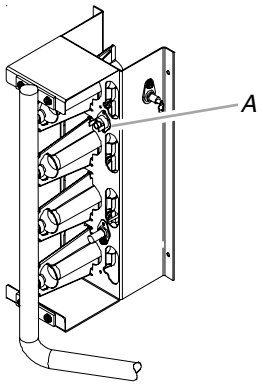

A. Rollout protection

Secondary Limit Control

The secondary limit control is located on the top of the blower scroll assembly. This control opens when elevated temperatures are sensed. Elevated temperatures at the control are normally caused by blower failure. The reason for the opening should be determined and repaired prior to resetting.

If the power to the unit is interrupted during the heating cycle, it may cause the secondary limit control to trip. Once the blower compartment temperature drops below the limit reset temperature, the limit will automatically reset.

Secondary Limit Control

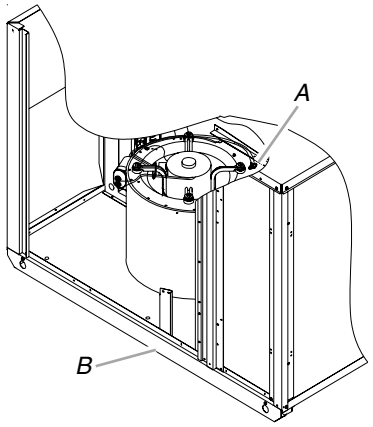

A. Secondary limit control
B. Back of unit

Pre-Operation Checks

1. Close the manual gas shutoff valve external to the unit.
2. Turn off the electrical power supply to the unit.
3. Set the room thermostat to its lowest possible setting.
4. Remove the heat exchanger door on the side of the unit by removing the screws.

IMPORTANT: This unit is equipped with an ignition device which automatically lights the main burner. Do not try to light burner by any other method.

5. Move the gas control valve switch to the OFF position.

   NOTE: Do not force the switch to turn.
6. Wait 5 minutes to clear out any gas.
7. Check for a gas odor around the unit, including near the ground because some types of gas are heavier than air.

IMPORTANT: If you have waited 5 minutes and you do smell gas, immediately leave the building and call your gas supplier or the fire department from a neighbor's house.

8. If you have waited 5 minutes and there is no gas odor, move the gas control valve switch to the On position.
9. Replace the heat exchanger door on the side of the unit.
10. Open the manual gas shutoff valve external to the unit.
11. Turn on the electrical power supply to the unit.
12. Set the thermostat to the desired setting.

Gas Control Valve—White-Rodgers 36G22

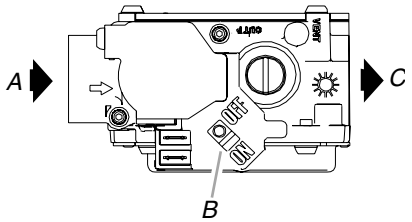

A. Inlet
B. On/Off selector switch
C. Outlet

Gas Control Valve—Honeywell VR8215 Single Stage

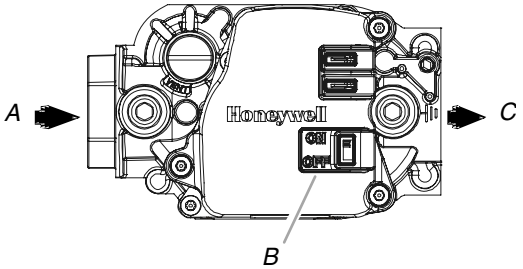

A. Inlet
B. On/Off selector switch
C. Outlet

Gas Supply And Manifold Check

Gas supply pressure and manifold pressure with the burners operating must be as specified on the rating plate.

Gas Supply Pressure Measurement

CAUTION

To prevent unreliable operation or equipment damage, the inlet gas supply pressure must be as specified on the unit rating plate with all other household gas-fired appliances operating.

WARNING

HIGH VOLTAGE!

Disconnect ALL power before servicing.

Multiple power sources may be present.

Failure to do so may cause property damage, personal injury or death.

The line pressure supplied to the gas control valve must be within the range specified in the Inlet Gas Supply Pressure chart on the next page. The supply pressure can be measured at the gas control valve inlet pressure tap or at a hose fitting installed in the gas piping drip leg. The supply pressure must be measured with the unit Off. To measure inlet pressure, use the following procedure.

Gas Control Valve—White-Rodgers 36G22

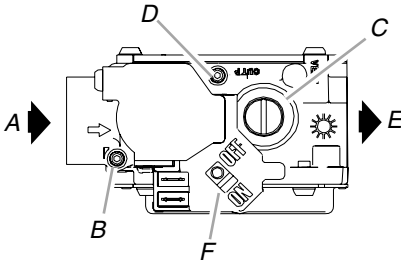

A. Inlet
B. Inlet pressure tap
C. Pressure regulator—under cap screw
D. Outlet pressure tap
E. Outlet
F. On/Off selector switch

Gas Control Valve—Honeywell VR8215 Single Stage

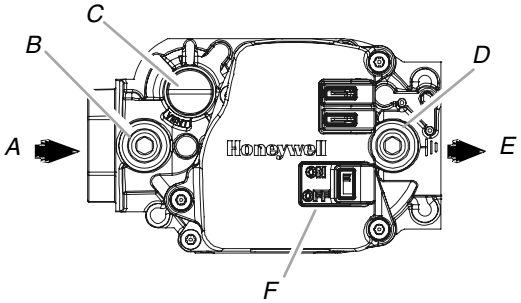

A. Inlet
B. Inlet pressure tap
C. Pressure regulator—under cap screw
D. Outlet pressure tap
E. Outlet
F. On/Off selector switch

1. Turn off the gas supply to furnace at the manual gas shutoff valve external to the furnace.
2. Turn off all electrical power to the system.
3. Inlet pressure tap connections:
   - Honeywell VR8215 valve: Remove the inlet pressure boss plug. Install an ⅛" NPT hose barb fitting into the inlet pressure tap.
   - White-Rodgers 36G22 valve: Back inlet pressure test screw (inlet pressure boss) out one turn counterclockwise (not more than one turn).
4. Attach a hose and manometer to the inlet pressure barb fitting (Honeywell valve) or inlet pressure boss (White-Rodgers valve).
5. Turn on the gas supply.
6. Turn on power and close thermostat R and W1 contacts to provide a call for heat.
7. Using a leak detection solution or soap suds, check for leaks at the outlet pressure boss plug (Honeywell valve) or screw (White-Rodgers valve). Bubbles forming indicate a leak.

   IMPORTANT: If a leak is detected, turn off gas immediately and repair all leaks.

8. Measure the gas supply pressure with burners firing. Adjust supply pressure using the Inlet Gas Supply Pressure chart. If supply pressure reading differs from the chart, make necessary adjustments to pressure regulator, gas piping size, etc., and/or consult with local gas utility.

Inlet Gas Supply Pressure	
Natural Gas	Minimum: 5.0" W.C. Maximum: 10.0" W.C.
Propane Gas	Minimum: 11.0" W.C. Maximum: 13.0" W.C.

9. Turn off all electrical power and gas supply to the system.
10. Remove the manometer hose from the hose barb fitting or inlet pressure boss.
11. Replace inlet pressure tap:
    - Honeywell VR8215 valve: Remove the ⅛" NPT hose barb fitting from the inlet pressure tap. Replace the inlet pressure boss plug and seal with a high quality thread sealer.
    - White-Rodgers 36G22 valve: Turn inlet pressure test screw in to seal pressure port (clockwise, 7 in.-lb minimum).
12. Retest for leaks.

    IMPORTANT: If a leak is detected, turn off gas immediately and repair all leaks.
13. Turn on electrical power and gas supply to the system.
14. Turn on valve switch.

Gas Manifold Pressure Measurement and Adjustment

CAUTION

To prevent unreliable operation or equipment damage, the gas manifold pressure must be as specified on the unit rating plate. Only minor adjustments should be made by adjusting the gas control valve pressure regulator.

WARNING

HIGH VOLTAGE!

Disconnect ALL power before servicing.

Multiple power sources may be present.

Failure to do so may cause property damage, personal injury or death.

1. Turn off the gas supply to furnace at the manual gas shutoff valve external to the furnace.
2. Turn off all electrical power to the system.
3. Outlet pressure tap connections:
    - Honeywell VR8215 valve: Remove the outlet pressure boss plug. Install an ⅛" NPT hose barb fitting into the outlet pressure tap.
    - White-Rodgers 36G22 valve: Back outlet pressure test screw (inlet/outlet pressure boss) out one turn (counterclockwise, not more than one turn).
4. Attach a hose and manometer to the outlet pressure barb fitting (Honeywell valve) or outlet pressure boss (White-Rodgers valve).
5. Turn on the gas supply.
6. Turn on power and close thermostat R and W1 contacts to provide a call for heat.
7. Using a leak detection solution or soap suds, check for leaks at the outlet pressure boss plug (Honeywell valve) or screw (White-Rodgers valve). Bubbles forming indicate a leak.

    IMPORTANT: If a leak is detected, turn off gas immediately and repair all leaks.
8. Measure the gas manifold pressure with burners firing.
9. Adjust manifold pressure using the Manifold Gas Pressure chart.

Manifold Gas Pressure	
Natural Gas	3.5" W.C.
Propane Gas	10.0" W.C.

10. Remove the regulator cover screw from the outlet pressure regulator adjust tower.
11. Turn the screw clockwise to increase pressure or counterclockwise to decrease pressure.
12. Replace the regulator cover screw.
13. Turn off all electrical power and gas supply to the system.
14. Remove the manometer hose from the hose barb fitting or outlet pressure boss.
15. Replace the outlet pressure tap:
    - Honeywell VR8215 valve: Remove the ⅛" NPT hose barb fitting from the outlet pressure tap. Replace the outlet pressure boss plug and seal with a high quality thread sealer.
    - White-Rodgers 36G22 valve: Turn the outlet pressure test screw in to seal pressure port (clockwise, 7 in.-lb minimum).
16. Turn on electrical power and gas supply to the system.
17. Close the thermostat contacts to provide a call for heat.
18. Using a leak detection solution or soap suds, check for leaks at the outlet pressure boss plug (Honeywell valve) or screw (White-Rodgers valve). Bubbles forming indicate a leak.

    IMPORTANT: If a leak is detected, turn off gas immediately and repair all leaks.

Gas Input Rate Check—Natural Gas Only

To measure Natural gas input, use a gas meter and proceed as follows:

1. Turn off the gas supply to all other gas-burning appliances except the furnace.
2. While the unit is operating, time and record one complete revolution of the smallest gas meter dial.
3. Calculate the number of seconds per cubic foot (sec/ft^3) of gas being delivered to the furnace. If the dial is a one cubic foot dial, divide the number of seconds recorded in Step 2 by one. If the dial is a 2 cubic foot dial, divide the number of seconds recorded in Step 2 by 2.
4. With the unit operating, time the smallest dial on the meter for one complete revolution. If this is a 2 cubic foot dial, divide the seconds by 2; if it is a 1 cubic foot dial, use the seconds as is. This gives the seconds per cubic foot of gas being delivered to the unit.
5. INPUT = GAS HTG VALUE x 3,600 / SEC. PER CUBIC FOOT

    Example: Natural gas with a heating value of 1,000 Btu per cubic foot and 34 seconds per cubic foot as determined by Step 2, then:

    Input = 1,000 x 3,600 / 34 = 106,000 Btu per Hour.

NOTE: Btu content of the gas should be obtained from the gas supplier. This measured input must not be greater than shown on the unit rating plate.

6. Relight all other appliances turned off in Step 1. Be sure all pilot burners are operating.

Main Burner Flame Check

Flames should be stable, soft and blue (dust may cause orange tips but they must not be yellow) and extending directly outward from the burner without curling, floating or lifting off.

Temperature Rise Check

Check the temperature rise through the unit by placing thermometers in supply and return air registers as close to the unit as possible. Thermometers must not be able to sample temperature directly from the unit heat exchangers, or false readings could be obtained.

1. All registers must be open; all duct dampers must be in their final (fully or partially open) position and the unit operated for 15 minutes before taking readings.
2. The temperature rise must be within the range specified on the rating plate.

   NOTE: Air temperature rise is the temperature difference between supply and return air.

With a properly designed system, the proper amount of temperature rise will normally be obtained when the unit is operated at rated input with the recommended blower speed.

If the correct amount of temperature rise is not obtained, it may be necessary to change the blower speed. A higher blower speed will lower the temperature rise. A slower blower speed will increase the temperature rise.

NOTE: Blower speed must be set to give the correct air temperature rise through the unit as marked on the rating plate.

External Static Pressure Check

The total external static pressure must be checked on this unit to determine if the airflow is proper.

Blower Speed Adjustments

WARNING

To avoid personal injury or death due to electrical shock, turn OFF power to the furnace before changing speed taps.

Refer to the wiring diagram in the Appendix to verify speed tap settings.

For models equipped with PSC type motors, blower speeds are to be changed at the ignition control board. Both heat speed and cool speed terminals are supplied on the board along with 2 unused motor lead terminals.

Some models are equipped with X-13 motors. X-13 motors are constant torque motors with very low power consumption. This motor is energized by 24V. Adjust the CFM for the unit by changing the 24V low voltage leads to the speed terminal block on the motor.

Heating-White Lead	Cooling-Yellow Lead
■ T1—Low Speed	■ T4—Low Speed
■ T2—Medium Speed	■ T5—High Speed
■ T3—High Speed	

NOTE: Heating airflow must be adjusted to provide the temperature rise shown on rating plate.

Limit Check

Check limit control operation after 15 minutes of operation by blocking the return air grille(s).

1. After several minutes the main burners must go Off. Blower will continue to run.
2. Remove air restrictions and main burners will relight after a cool down period of a few minutes.
3. Adjust the thermostat setting below room temperature.
   - Main burners must go Off.
   - Circulating Air Blower will continue to run for 120, 135 or 150 seconds, depending on the setting.

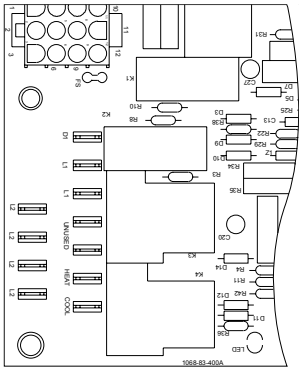

NOTE: If necessary, adjust the Fan Off Delay settings to obtain satisfactory comfort level.

WARNING

This unit must not be used as a "construction heater" during the finishing phases of construction on a new structure. This type of use may result in premature failure of the unit due to extremely low return air temperatures and exposure to corrosive or very dirty atmospheres.

UNIT SHUTDOWN

1. Set the thermostat to lowest setting.
2. Turn off the electrical power supply to the unit.
3. Remove the heat exchanger door on the side of the unit by removing screws.
4. Move the gas control valve switch to the Off position.

   NOTE: Do not force.
5. Close the manual gas shutoff valve external to the unit.
6. Replace the heat exchanger door on the unit.
7. If cooling and/or air circulation will be desired, turn on the electrical power.

COOLING START-UP

NOTE: Check all manual reset limit controls in heating circuit if cooling mode does not operate.

Compressor Protection Devices

The compressor includes components which are designed to protect the compressor against abnormal operating conditions.

⚠ WARNING

To prevent personal injury or death, always disconnect electrical power before inspecting or servicing the unit. All compressor protection devices reset automatically, energizing the contactor and outdoor fan.

Cooling Refrigerant Charging

Check unit charge before putting the cooling section into full operation. The unit is factory charged with R-410A for nominal airflow and static pressure conditions. The unit has a piston flowrator expansion device.

To ensure the unit is properly charged for the intended application, check the unit refrigerant superheat at the compressor. The refrigerant superheat is a function of outdoor ambient temperature and return air temperature of the conditioned space. It is the installing contractors responsibility to ensure the proper refrigerant superheat at the compressor is adjusted for each application. For example, 10º refrigerant superheat level is adequate for a 95ºF (35ºC) outdoor ambient temperature and a 78ºF to 80ºF (26ºC to 27ºC) for indoor return air temperature. As the outdoor ambient temperature rises, the superheat decreases and as the outdoor ambient temperature lowers the superheat increases. Proper superheat adjustment optimizes cooling performance.

Cooling Operation

NOTE: Mechanical cooling cannot be reliably provided at ambient temperatures below 50°F (10ºC).

1. Turn on the electrical power supply to the unit.
2. Place the room thermostat selector switch in the COOL position (or AUTO if available, and if automatic changeover from cooling to heating is desired).
3. Set the room thermostat to the desired temperature.

TROUBLESHOOTING

Ignition Control Error Codes

The following presents probable causes of questionable unit operation. Refer to Diagnostic Indicator Chart for an interpretation of the signal and to this section for an explanation.

Remove the control box access panel and note the number of diagnostic LED flashes. Refer to Diagnostic Indicator Chart for an interpretation of the signal and to this section for an explanation.

Abnormal Operation—Heating

Internal Control Failure

If the integrated ignition control in this unit encounters an internal fault, it will go into a “hard” lockout and turn off the diagnostic LED. If diagnostic LED indicates an internal fault, check the power supply to the unit for the proper voltage, check all fuses, circuit breakers and wiring. Disconnect electric power for 5 seconds. If LED remains off after restoring power, replace control.

External Lockout

An external lockout occurs if the integrated ignition control determines that a measurable combustion cannot be established within 3 consecutive ignition attempts. If flame is not established within the 7-second trial for ignition, the gas control valve is de-energized, 15-second inter-purge cycle is completed, and ignition is reattempted. The control will repeat this routine 3 times if a measurable combustion is not established. The control will then shut off the induced draft blower and go into a lockout state.

If flame is established but lost, the control will energize the circulator blower at the heat speed and then begin a new ignition sequence. If flame is established then lost on subsequent attempts, the control will recycle for 4 consecutive ignition attempts (5 attempts total) before locking out.

The diagnostic fault code is 1 flash for a lockout due to failed ignition attempts or flame dropouts. The integrated control will automatically reset after 1 hour, or it can be reset by removing the thermostat signal or disconnecting the electrical power supply for over 5 seconds. If the diagnostic LED indicates an external lockout, perform the following checks:

- Check the supply and manifold pressures.
- Check the gas orifices for debris.
- Check gas control valve for proper operation.
- Check secondary limit.

  A dirty filter, excessive duct static, insufficient airflow, a faulty limit or a failed circulator blower can cause this limit to open. Check filters, total external duct static, circulator blower motor, blower motor speed tap (see wiring diagram) and limit. An interruption in electrical power during a heating cycle may also cause the auxiliary limit to open. The automatic reset secondary limit is located on top of the circulator blower assembly.
- Check rollout limit.

  If the burner flames are not properly drawn into the heat exchanger, the flame rollout protection device will open. Possible causes are restricted or blocked flue passages, blocked or cracked heat exchanger, a failed induced draft blower or insufficient combustion air. The rollout protection device is a manual reset limit located on the burner bracket. The cause of the flame rollout must be determined and corrected before resetting the limit.

- Check flame sensor.

  A drop in flame signal can be caused by nearly invisible coating on the sensor. Remove the sensor and carefully clean with steel wool.
- Check wiring.

  Check wiring for opens/shorts and incorrect wiring.

  IMPORTANT: If you have to frequently reset your gas/electric package unit, it means that a problem exists that should be corrected. Contact a qualified servicer for further information.

Pressure Switch Stuck Open

A pressure switch stuck open can be caused by a faulty pressure switch, faulty wiring, a disconnected or damaged hose, a blocked or restricted flue or a faulty induced draft blower.

If the control senses an open pressure switch during the prepurge cycle, the induced draft blower only will be energized. If the pressure switch opens after ignition has begun, the gas control valve is de-energized, the circulator blower heat-off cycle begins, and the induced draft blower remains on. The diagnostic fault code is 2 flashes.

Pressure Switch Stuck Closed

A stuck closed pressure switch can be caused by a faulty pressure switch or faulty wiring. If the control encounters a pressure switch stuck closed, the induced draft blower remains off. The diagnostic LED code for this fault is 3 flashes.

Open Thermal Protection Device

If the primary limit switch opens, the gas control valve is immediately de-energized, and the induced draft and air circulating blowers are energized. The induced draft and air circulator blowers remain energized until the limit switch recloses. The diagnostic fault code for an open limit is 4 flashes.

A primary limit will open due to excessive supply air temperatures. This can be caused by a dirty filter, excessive duct static, insufficient airflow or a faulty limit. Check filters, total external duct static, blower motor, blower motor speed tap (see wiring diagram) and limit. This limit will automatically reset once the temperature falls below a preset level.

Flame Detected with Gas Control Valve Closed

If flame is detected with the gas control valve de-energized, the combustion and air circulator blowers are energized. The diagnostic fault code is 5 flashes for this condition. The control can be reset by removing the power supply to the unit or it will automatically reset after one hour. Incorrect wiring is the probable cause for this fault.

Abnormal Operation—Cooling

Short Cycle Compressor Delay

The automatic ignition control has a built-in feature that prevents damage to the compressor in short-cycling situations. In the event of intermittent power losses or intermittent thermostat operation, the ignition control will delay output to the compressor contactor for 3 minutes from the time power is restored. Compressor is off a total of 3 minutes. The diagnostic LED will flash 6 times to indicate the compressor contactor output is being delayed.

NOTE: Some electronic thermostats also have a built-in compressor short-cycle timer that may be longer than the 3-minute delay given above. If you are using an electronic thermostat and the compressor has not started after 3 minutes, wait an additional 5 minutes to allow the thermostat to complete its short-cycle delay time.

MAINTENANCE

⚠ WARNING

HIGH VOLTAGE!

Disconnect ALL power before servicing.

Multiple power sources may be present.

Failure to do so may cause property damage, personal injury or death.

Have the gas heating section of the unit checked at least once a year before the heating season begins to be sure that the combustion air inlet and flue outlet hoods are not blocked by debris, which would prevent adequate combustion air and a properly operating vent system.

Filter Replacement or Cleaning

A return air filter is not supplied with this unit; however, there must be a means of filtering all of the return air. The filter(s) may be located in the return air duct(s) or return air filter grille(s). Consult with your installing dealer for the actual location of the return air filter(s) for your unit.

Dirty filters are the most common cause of inadequate heating or cooling performance. Filter inspection should be made at least every 2 months; more often if necessary because of local conditions and usage.

Dirty throwaway filters should be discarded and replaced with a new, clean filter. Dirty permanent filters should be washed with water, thoroughly dried and sprayed with a filter adhesive before being reinstalled. (Filter adhesives may be found at many hardware stores.) Permanent filters should last several years. However, should one become torn or uncleanable, it should be replaced.

Cabinet Finish Maintenance

Use a fine grade automotive wax on the cabinet finish to maintain the finish's original high luster. This is especially important in installations with extended periods of direct sunlight.

Clean Outside Coil—Qualified Servicer Only

The coil with the outside air flowing over it should be inspected annually and cleaned as frequently as necessary to keep the finned areas free of lint, hair and debris.

Condenser, Evaporator and Induced Drafter Motors

Bearings on the air circulating blower motor, condenser motor and the combustion fan motor are permanently lubricated. No additional oiling is required.

Flame Sensor—Qualified Servicer Only

A drop in the flame current can be caused by a nearly invisible coating on the flame sensor. This coating, created by the fuel or combustion air supply, can be removed by carefully cleaning the flame sensor with steel wool.

NOTE: After cleaning, the microamp signal should be stable and in the range of 4 to 6 microamps DC.

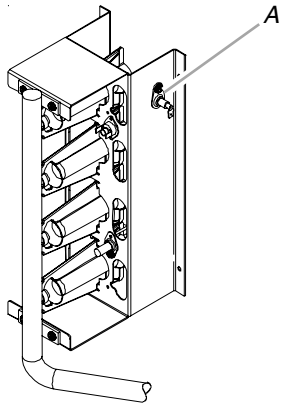

A. Flame sensor

Flue Passages—Qualified Servicer Only

At the start of each heating season, inspect and, if necessary, clean the unit flue passage.

Cleaning Flue Passages—Qualified Servicer Only

1. Shut off electric power and gas supply to the unit.
2. Remove burner assembly by disconnecting the gas line and removing the manifold bracket from the partition panel.
3. Remove the flue from the induced draft blower and the collector box cover from the partition panel.
4. The primary heat exchanger tubes can be cleaned using a round wire brush attached to a length of high grade stainless steel cable, such as drain cleanout cable. Attach a variable speed reversible drill to the other end of the spring cable. Slowly rotate the cable with the drill and insert it into one of the primary heat exchanger tubes. While reversing the drill, work the cable in and out several times to obtain sufficient cleaning. Use a large cable for the large tube, and then repeat the operation with a small cable for the smaller tube. Repeat for each tube.
5. When all heat exchanger tubes have been cleaned, replace the parts in the reverse order in which they were removed.
6. To reduce the chances of repeated fouling of the heat exchanger, perform the steps listed in “Start-up, Adjustments and Checks.”

Main Burner Flame—Qualified Servicer Only

Flames should be stable, soft and blue (dust may cause orange tips but must not be yellow). The flames must extend directly outward from the burner without curling, floating or lifting off.

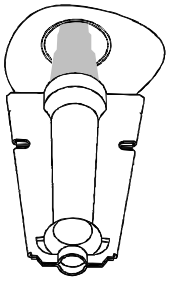

NOTE: Check the burner flames for good adjustment, stable, soft and blue with no curling, floating or lifting off.

Burner Flame

⚠ WARNING

To avoid personal injury or death due to electrical shock, do not remove any internal compartment covers or attempt any adjustment. Contact a qualified servicer at once if an abnormal flame should develop.

At least once a year, prior to or during the heating season, make a visual check of the burner flames.

NOTE: This will involve removing and reinstalling the heat exchanger door on the unit, which is held by 2 screws. If you are uncertain about your ability to do this, contact a qualified servicer. If a strong wind is blowing, it may alter the airflow pattern within the unit enough that an inspection of the burner flames is not possible.

Cleaning Burners

1. Shut off electric power and gas supply to the unit.
2. Remove the screws securing the manifold to the burner retention bracket. Remove the manifold and rotate each burner counterclockwise to remove.

Manifold Assembly

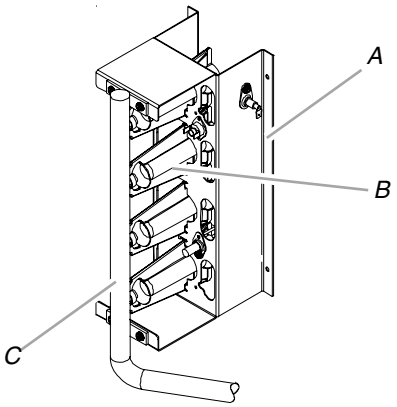

A. Burner bracket
B. Burner
C. Manifold

3. Remove the burners.
4. Use a bottle brush to clean burner insert and inside of the burners.
5. Replace burners and manifold, inspect the burner assembly for proper seating of burners in retention slots.
6. Reconnect electrical power and gas supply.

⚠ WARNING

Label all wires prior to disconnection when servicing controls. Wiring errors can cause improper and dangerous operation. Verify proper operation after servicing.

⚠ CAUTION

Always verify proper operation after servicing.

For further information on the yearly inspection, consult the User Manual. It is recommended that a qualified servicer inspect and service the unit at least once each year.

Turn the unit on at the thermostat. Wait a few minutes, since any dislodged dust will alter the normal flame appearance. Flames should be predominantly blue and directed into the tubes. They should not be yellow. They should extend directly outward from the burner ports without curling downward, floating or lifting off the ports.

ACCESSORIES AND FUNCTIONAL PARTS

Sheet Metal Accessories

Additional accessories can be purchased to fit specific application needs. Parts and instructions are available from your distributor.

Functional Parts

Functional Parts List

■ Auxiliary Limit Switch Flame Roll-out Switch	■ Condenser Coil Ignition Control
■ Blower Housing Flame Sensor	■ Condenser Fan Blade Induced Draft Blower
■ Circulator Blower Motor Gas Orifice	■ Condenser Fan Motor Pressure Switch

Functional Parts List

■ Blower Wheel Gas Valve	■ Contactor Pressure Switch Hose
■ Burner Heat Exchanger	■ Gas Manifold Transformer
■ Capacitor High Limit Switch	■ Evaporator Coil
■ Compressor Igniter	■

General Information

- Refer to the description in Functional Parts List when ordering any of the listed functional parts. Be sure to provide the unit model and serial numbers with the order.
- Although only functional parts are shown, all sheet metal parts, doors, etc., may be ordered by description.
- Parts are available from your distributor.

APPENDIX

Blower Performance Data—Single Phase

	Unit	Low				Med				High			
Model	**Static**	**CFM**	**Watts**	**Amps**	**Rise**	**CFM**	**Watts**	**Amps**	**Rise**	**CFM**	**Watts**	**Amps**	**Rise**
WGGE4324A045M Rise Range: 30° to 60°	0.1	600	150	0.67	57	850	230	1.02	40	1,190	380	1.67	NR
	0.2	570	140	0.65	60	830	220	1.00	41	1,140	360	1.62	NR
	0.3	510	130	0.63	NR	765	215	0.97	45	1,080	350	1.58	32
	0.4	450	125	0.61	NR	715	210	0.94	48	1,025	340	1.54	33
	0.5	380	120	0.58	NR	660	205	0.90	52	975	330	1.38	35
	0.6	---	---	---	NR	610	195	0.88	56	920	310	1.37	37
	0.7	---	---	---	NR	---	---	---	NR	830	300	1.35	41
	0.8	---	---	---	NR	---	---	---	NR	730	290	1.32	47

	Unit	Low				Med				High			
Model	**Static**	**CFM**	**Watts**	**Amps**	**Rise**	**CFM**	**Watts**	**Amps**	**Rise**	**CFM**	**Watts**	**Amps**	**Rise**
WGGE4324A070M Rise Range: 35° to 65°	0.1	600	150	0.67	NR	850	230	1.02	NR	1,190	380	1.67	43
	0.2	570	140	0.65	NR	830	220	1.00	NR	1,140	360	1.62	45
	0.3	510	130	0.63	NR	765	215	0.97	NR	1,080	350	1.58	47
	0.4	450	125	0.61	NR	715	210	0.94	NR	1,025	340	1.54	50
	0.5	380	120	.058	NR	660	205	0.90	NR	975	330	1.38	52
	0.6	---	---	---	NR	610	195	0.88	NR	920	310	1.37	56
	0.7	---	---	---	NR	---	---	---	NR	830	300	1.35	62
	0.8	---	---	---	NR	---	---	---	NR	730	290	1.32	NR
WGGE4330A045M Rise Range: 35° to 65°	0.1	1,056	350	1.51	33	1,261	452	1.95	NR	1,370	509	2.23	NR
	0.2	1,010	339	1.43	34	1,221	442	1.90	NR	1,310	492	2.13	NR
	0.3	971	343	1.45	36	1.174	428	1.84	NR	1,262	489	2.09	NR
	0.4	937	329	1.41	37	1,125	414	1.80	31	1,208	475	2.06	NR
	0.5	878	318	1.27	39	1,063	398	1.70	32	1,140	453	1.93	30
	0.6	811	306	1.29	43	1,004	380	1.66	34	1,081	440	1.90	32
	0.7	723	291	1.21	48	919	368	1.59	38	1,006	425	1.88	34
	0.8	545	259	1.10	NR	796	371	1.46	43	879	403	1.74	39
WGGE4330A070M Rise Range: 35° to 65°	0.1	1,056	350	1.51	49	1,261	452	1.95	41	1,370	509	2.23	38
	0.2	1,010	339	1.43	51	1,221	442	1.90	42	1,310	492	2.13	40
	0.3	971	343	1.45	53	1.174	428	1.84	44	1,262	489	2.09	41
	0.4	937	329	1.41	55	1,125	414	1.80	46	1,208	475	2.06	43
	0.5	878	318	1.27	59	1,063	398	1.70	49	1,140	453	1.93	45
	0.6	811	306	1.29	64	1,004	380	1.66	52	1,081	440	1.90	48
	0.7	723	291	1.21	NR	919	368	1.59	56	1,006	425	1.88	NR
	0.8	545	259	1.10	NR	796	371	1.46	65	879	403	1.74	NR
WGGE4336A070M Rise Range: 35° to 65°	0.1	1,029	346	1.51	50	1,337	471	2.08	39	1,462	596	2.64	35
	0.2	982	334	1.46	53	1,265	452	2.01	41	1,398	563	2.58	37
	0.3	946	329	1.40	55	1,227	448	1.97	42	1,326	550	2.50	39
	0.4	888	313	1.38	58	1,159	429	1.87	45	1,260	534	2.42	41
	0.5	823	304	1.29	63	1,073	405	1.73	48	1,188	513	2.34	44
	0.6	750	287	1.23	NR	1,008	393	1.71	51	1,090	496	2.22	47
	0.7	668	271	1.16	NR	895	371	1.61	58	997	478	2.18	52
	0.8	454	238	1.00	NR	760	346	1.49	68	852	454	2.12	61
WGGE4336A090M Rise Range: 45° to 75°	0.1	1,029	346	1.51	50	1,337	471	2.08	NR	1,462	596	2.64	NR
	0.2	982	334	1.46	53	1,265	452	2.01	NR	1,398	563	2.58	NR
	0.3	946	329	1.40	55	1,227	448	1.97	NR	1,326	550	2.50	NR
	0.4	888	313	1.38	58	1,159	429	1.87	45	1,260	534	2.42	NR
	0.5	823	304	1.29	63	1,073	405	1.73	48	1,188	513	2.34	NR
	0.6	750	287	1.23	NR	1,008	393	1.71	51	1,090	496	2.22	47
	0.7	668	271	1.16	NR	895	371	1.61	58	997	478	2.18	52
	0.8	454	238	1.00	NR	760	346	1.49	68	852	454	2.12	61

Model	Unit Static	Low CFM	Low Watts	Low Amps	Low Rise	Med CFM	Med Watts	Med Amps	Med Rise	High CFM	High Watts	High Amps	High Rise
WGGE4342A070M Rise Range: 35° to 65°	0.1	1,100	340	1.55	46	1,450	480	2.15	35	1,575	585	2.64	NR
	0.2	1,040	325	1.49	49	1,390	460	2.06	37	1,515	565	2.58	NR
	0.3	1,000	320	1.44	51	1,300	445	1.98	39	1,430	550	2.50	36
	0.4	925	305	1.38	55	1,215	425	1.89	42	1,340	525	2.42	38
	0.5	860	290	1.32	59	1,115	395	1.79	46	1,240	505	2.34	41
	0.6	800	275	1.22	64	1,030	375	1.71	50	1,130	465	2.22	45
	0.7	690	255	1.16	NR	945	350	1.60	54	1,010	450	2.18	51
	0.8	---	---	---	NR	860	335	1.54	59	910	430	2.12	56
WGGE4342A070M Rise Range: 45° to 75°	0.1	1,100	340	1.55	62	1,450	480	2.15	47	1,575	585	2.64	NR
	0.2	1,040	325	1.49	66	1,390	460	2.06	49	1,515	565	2.58	45
	0.3	1,000	320	1.44	68	1,300	445	1.98	52	1,430	550	2.50	48
	0.4	925	305	1.38	74	1,215	425	1.89	56	1,340	525	2.42	51
	0.5	860	290	1.32	NR	1,115	395	1.79	61	1,240	505	2.34	55
	0.6	800	275	1.22	NR	1,030	375	1.71	66	1,130	465	2.22	60
	0.7	690	255	1.16	NR	945	350	1.60	72	1,010	450	2.18	67
	0.8	---	---	---	NR	860	335	1.54	NR	910	430	2.12	75

Model	Unit Static	T1 Heating Speed CFM	T1 Heating Speed Watts	T1 Heating Speed Amps	T1 Heating Speed Rise	T2 Heating Speed CFM	T2 Heating Speed Watts	T2 Heating Speed Amps	T2 Heating Speed Rise	T3 Heating Speed CFM	T3 Heating Speed Watts	T3 Heating Speed Amps	T3 Heating Speed Rise
WGGE4348A070M Rise Range: 35° to 65°	0.1	---	---	---	---	---	---	---	---	---	---	---	---
	0.2	914	125	1.07	56	1,105	186	1.56	46	1,397	323	2.57	NR
	0.3	822	134	1.14	62	1,024	193	1.60	50	1,346	331	2.67	NR
	0.4	733	140	1.20	69	967	202	1.65	53	1,288	342	2.76	NR
	0.5	664	150	1.26	NR	884	214	1.76	58	1,273	352	2.82	NR
	0.6	606	154	1.28	NR	816	220	1.75	62	1,178	359	2.88	NR
	0.7	584	162	1.32	NR	769	230	1.85	66	1,120	369	2.97	45
	0.8	551	164	1.34	NR	698	236	1.89	73	1,057	381	3.09	48

Unit Static	T4 Cooling Speed CFM	T4 Cooling Speed Watts	T4 Cooling Speed Amps	T5 Cooling Speed CFM	T5 Cooling Speed Watts	T5 Cooling Speed Amps
0.1	---	---	---	---	---	---
0.2	1,593	449	3.55	1,669	532	4.22
0.3	1,545	463	3.69	1,654	239	4.25
0.4	1,506	476	3.82	1,610	551	4.30
0.5	1,448	481	3.87	1,545	557	4.36
0.6	1,400	493	3.95	1,512	566	4.41
0.7	1,341	502	4.00	1,433	578	4.59
0.8	1,289	511	4.11	1,392	591	4.65

Model	Unit Static	T1 Heating Speed CFM	Watts	Amps	Rise	T2 Heating Speed CFM	Watts	Amps	Rise	T3 Heating Speed CFM	Watts	Amps	Rise
WGGE4348A090M Rise Range: 45° to 75°	0.1	---	---	---	---	---	---	---	---	---	---	---	---
	0.2	914	125	1.07	75	1,105	186	1.56	62	1,397	323	2.57	49
	0.3	822	134	1.14	NR	1,024	193	1.60	67	1,346	331	2.67	51
	0.4	733	140	1.20	NR	967	202	1.65	71	1,288	342	2.76	53
	0.5	664	150	1.26	NR	884	214	1.76	NR	1,273	352	2.82	54
	0.6	606	154	1.28	NR	816	220	1.75	NR	1,178	359	2.88	58
	0.7	584	162	1.32	NR	769	230	1.85	NR	1,120	369	2.97	61
	0.8	551	164	1.34	NR	698	236	1.89	NR	1,057	381	3.09	65

Unit Static	T4 Cooling Speed CFM	Watts	Amps	T5 Cooling Speed CFM	Watts	Amps
0.1	---	---	---	---	---	---
0.2	1,593	449	3.55	1,669	532	4.22
0.3	1,545	463	3.69	1,654	239	4.25
0.4	1,506	476	3.82	1,610	551	4.30
0.5	1,448	481	3.87	1,545	557	4.36
0.6	1,400	493	3.95	1,512	566	4.41
0.7	1,341	502	4.00	1,433	578	4.59
0.8	1,289	511	4.11	1,392	591	4.65

Model	Unit Static	T1 Heating Speed CFM	Watts	Amps	Rise	T2 Heating Speed CFM	Watts	Amps	Rise	T3 Heating Speed CFM	Watts	Amps	Rise
WGGE4348A115M Rise Range: 45° to 75°	0.1	---	---	---	---	---	---	---	---	---	---	---	---
	0.2	914	125	1.07	NR	1,105	186	1.56	77	1,397	323	2.57	49
	0.3	822	134	1.14	NR	1,024	193	1.60	NR	1,346	331	2.67	51
	0.4	733	140	1.20	NR	967	202	1.65	NR	1,288	342	2.76	53
	0.5	664	150	1.26	NR	884	214	1.76	NR	1,273	352	2.82	54
	0.6	606	154	1.28	NR	816	220	1.75	NR	1,178	359	2.88	58
	0.7	584	162	1.32	NR	769	230	1.85	NR	1,120	369	2.97	61
	0.8	551	164	1.34	NR	698	236	1.89	NR	1,057	381	3.09	65

Unit Static	T4 Cooling Speed CFM	Watts	Amps	T5 Cooling Speed CFM	Watts	Amps
0.1	---	---	---	---	---	---
0.2	1,593	449	3.55	1,669	532	4.22
0.3	1,545	463	3.69	1,654	239	4.25
0.4	1,506	476	3.82	1,610	551	4.30
0.5	1,448	481	3.87	1,545	557	4.36
0.6	1,400	493	3.95	1,512	566	4.41
0.7	1,341	502	4.00	1,433	578	4.59
0.8	1,289	511	4.11	1,392	591	4.65

Model	Unit Static	T1 Heating Speed CFM	Watts	Amps	Rise	T2 Heating Speed CFM	Watts	Amps	Rise	T3 Heating Speed CFM	Watts	Amps	Rise
WGGE4360A090M Rise Range: 45° to 75°	0.1	1,125	162	1.44	61	1,466	315	2.67	47	1,780	496	3.33	NR
	0.2	1,049	168	1.53	65	1,384	322	2.74	50	1,730	506	3.89	NR
	0.3	1,000	178	1.60	69	1,347	329	2.78	51	1,664	520	4.01	NR
	0.4	910	184	1.64	75	1,291	341	2.83	53	1,608	526	4.03	NR
	0.5	857	197	1.75	NR	1,237	350	2.90	55	1,568	532	4.12	NR
	0.6	809	201	1.83	NR	1,185	362	3.05	58	1,515	546	4.14	45
	0.7	739	207	1.86	NR	1,134	369	3.09	60	1,477	552	4.18	46
	0.8	703	218	1.96	NR	1,087	382	3.21	63	1,422	562	4.23	48

Unit Static	T4 Cooling Speed CFM	Watts	Amps	T5 Cooling Speed CFM	Watts	Amps
0.1	1,942	649	4.83	2,067	792	5.81
0.2	1,883	657	4.87	2,030	811	5.85
0.3	1,859	670	4.96	1,982	814	5.88
0.4	1,827	675	4.97	1,909	808	5.86
0.5	1,749	683	4.99	1,842	798	5.85
0.6	1,706	693	5.10	1,789	772	5.65
0.7	1,655	703	5.12	1,703	763	5.58
0.8	1,588	705	5.11	1,618	732	5.29

Model	Unit Static	T1 Heating Speed CFM	Watts	Amps	Rise	T2 Heating Speed CFM	Watts	Amps	Rise	T3 Heating Speed CFM	Watts	Amps	Rise
WGGE4360A115M Rise Range: 45° to 75°	0.1	1,125	162	1.44	NR	1,466	315	2.67	58	1,780	496	3.33	48
	0.2	1,049	168	1.53	NR	1,384	322	2.74	62	1,730	506	3.89	49
	0.3	1,000	178	1.60	NR	1,347	329	2.78	63	1,664	520	4.01	51
	0.4	910	184	1.64	NR	1,291	341	2.83	66	1,608	526	4.03	53
	0.5	857	197	1.75	NR	1,237	350	2.90	69	1,568	532	4.12	54
	0.6	809	201	1.83	NR	1,185	362	3.05	72	1,515	546	4.14	56
	0.7	739	207	1.86	NR	1,134	369	3.09	NR	1,477	552	4.18	58
	0.8	703	218	1.96	NR	1,087	382	3.21	NR	1,422	562	4.23	60

Unit Static	T4 Cooling Speed CFM	Watts	Amps	T5 Cooling Speed CFM	Watts	Amps
0.1	1,942	649	4.83	2,067	792	5.81
0.2	1,883	657	4.87	2,030	811	5.85
0.3	1,859	670	4.96	1,982	814	5.88
0.4	1,827	675	4.97	1,909	808	5.86
0.5	1,749	683	4.99	1,842	798	5.85
0.6	1,706	693	5.10	1,789	772	5.65
0.7	1,655	703	5.12	1,703	763	5.58
0.8	1,588	705	5.11	1,618	732	5.29

Model	Unit Static	T1 Heating Speed CFM	Watts	Amps	Rise	T2 Heating Speed CFM	Watts	Amps	Rise	T3 Heating Speed CFM	Watts	Amps	Rise
WGGE4360A140M Rise Range: 45° to 75°	0.1	1,125	162	1.44	NR	1,466	315	2.67	71	1,780	496	3.33	59
	0.2	1,049	168	1.53	NR	1,384	322	2.74	NR	1,730	506	3.89	60
	0.3	1,000	178	1.60	NR	1,347	329	2.78	NR	1,664	520	4.01	63
	0.4	910	184	1.64	NR	1,291	341	2.83	NR	1,608	526	4.03	65
	0.5	857	197	1.75	NR	1,237	350	2.90	NR	1,568	532	4.12	67
	0.6	809	201	1.83	NR	1,185	362	3.05	NR	1,515	546	4.14	69
	0.7	739	207	1.86	NR	1,134	369	3.09	NR	1,477	552	4.18	71
	0.8	703	218	1.96	NR	1,087	382	3.21	NR	1,422	562	4.23	74

Unit Static	T4 Cooling Speed CFM	Watts	Amps	T5 Cooling Speed CFM	Watts	Amps
0.1	1,942	649	4.83	2,067	792	5.81
0.2	1,883	657	4.87	2,030	811	5.85
0.3	1,859	670	4.96	1,982	814	5.88
0.4	1,827	675	4.97	1,909	808	5.86
0.5	1,749	683	4.99	1,842	798	5.85
0.6	1,706	693	5.10	1,789	772	5.65
0.7	1,655	703	5.12	1,703	763	5.58
0.8	1,588	705	5.11	1,618	732	5.29

NOTES:

- NR = Heating Temperature Rise Not Recommended
- The Shaded area indicates ranges in excess of maximum external static pressure allowable when heating. For satisfactory operation, external static pressure should not exceed 0.5" W.C.

Ignition Control Diagnostic Indicator Chart

Refer to “Abnormal Operation—Heating” and “Abnormal Operation—Cooling” sections of this manual.

Light Signal	Equipment Status	Check
Off	No power or internal control failure	Check input power, fuse on control and/or replace control.
1 flash	Ignition failure, open rollout switch or open auxiliary limit switch	Check gas flow, gas pressure, gas control valve, flame sensor or flame rollout. Check for a bad switch or open auxiliary limit.
2 flashes	Pressure switch open	Check pressure switch.
3 flashes	Pressure switch closed without inducer on	Check pressure switch.
4 flashes	Thermal protection device open	Check main limit open or bad switch.
5 flashes	Flame detected with gas control valve closed	Check for sticking gas control valve.
6 flashes	Short cycle compressor delay (cooling only)	Check 3-minute compressor anti-cycle timer.

Heating Timing Chart

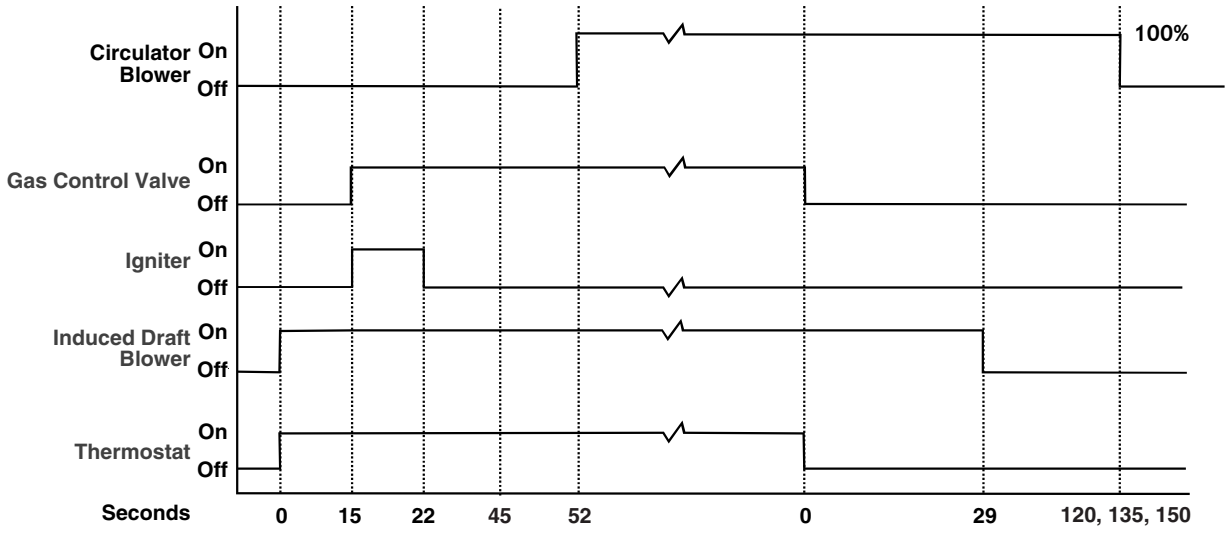

Cooling Timing Chart

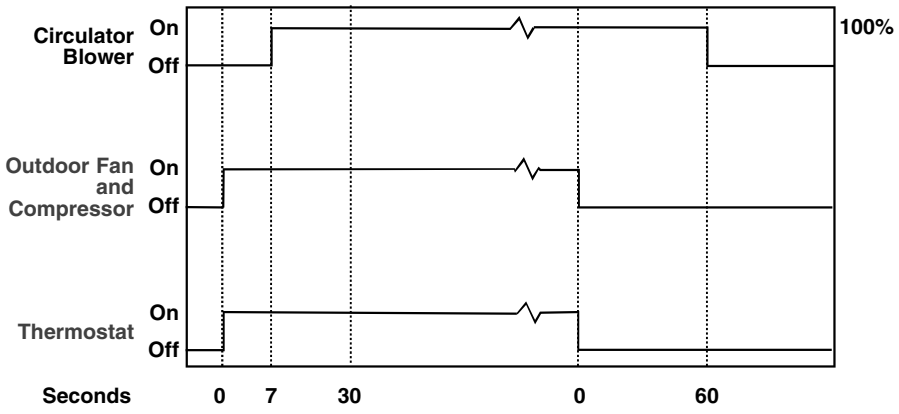

Unit Dimensions

Unit Dimensions—Rear

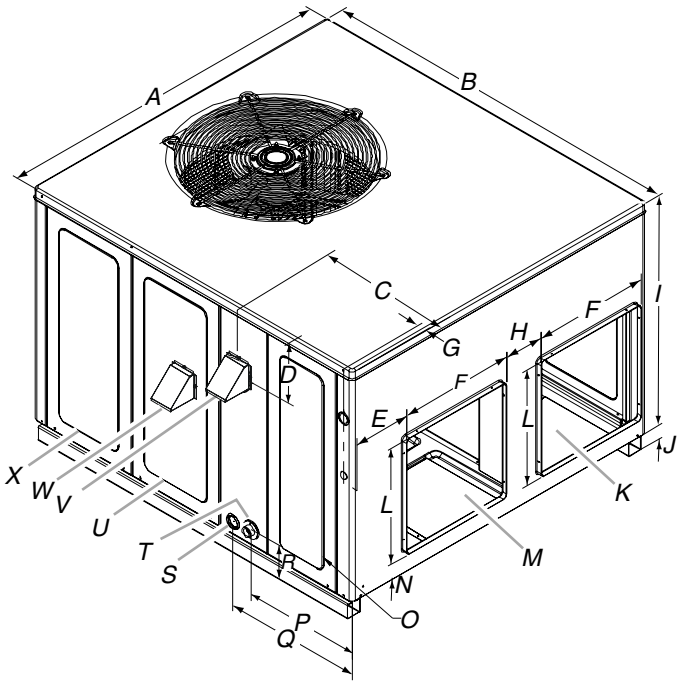

A. 47" (119.4 cm)
B. 51" (129.5 cm)
C. 18 7/16" (46.8 cm)
D. Medium: 9 1/2" (24.2 cm), large: 14" (35.6 cm)
E. 7 15/16" (20.2 cm)
F. 16" (40.6 cm)
G. 1 3/8" (3.5 cm)
H. 5 1/2" (14 cm)
I. Medium: 32" (81.3 cm), large: 40" (101.6 cm)
J. 2 3/4" (7 cm)
K. Air return
L. Medium: 16" (40.6 cm), large: 18" (45.7 cm)
M. Air supply
N. 3" (7.6 cm)
O. Evaporator/ control panel access panel
P. 16 1/8" (40.9 cm)
Q. 19 1/8" (48.6 cm)
R. 4 3/4" (12.1 cm)
S. Gas supply entrance
T. Condensate drain connection—3/4" (1.9 cm) NPT female
U. Heat exchange access panel
V. Flue exhaust hood
W. Combustion air inlet
X. Suction/liquid pressure ports behind compressor access panel

Unit Dimensions—Inside

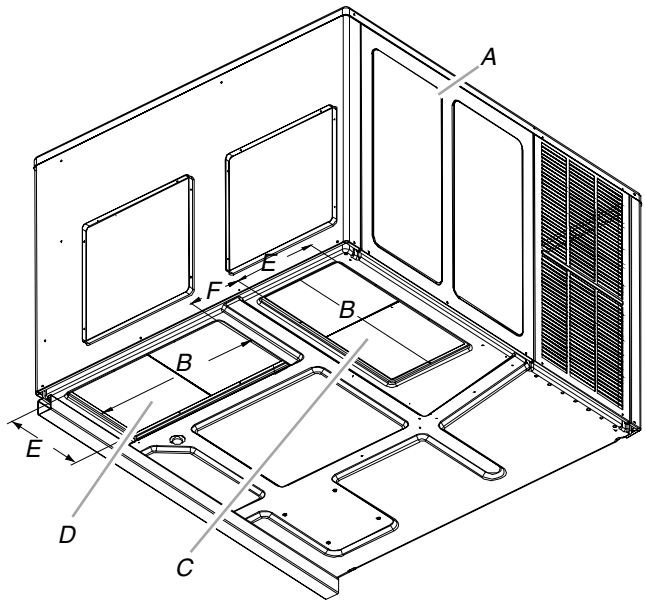

A. Blower access panel
B. 22" (55.9 cm)
C. Air return
D. Air supply
E. 11" (27.9 cm)
F. 5 3/4" (14.6 cm)

Unit Dimensions—Side

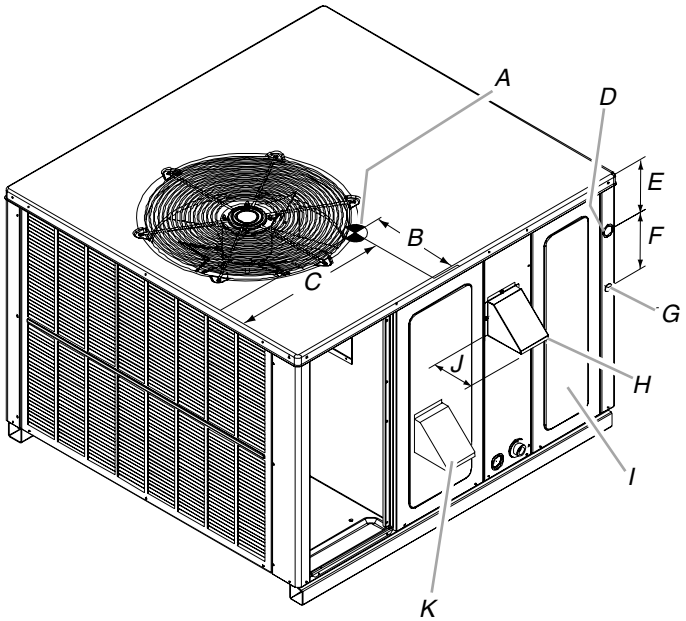

A. Center of gravity
B. 20" (50.8 cm)
C. 24" (61 cm)
D. Power supply wire entrance
E. 7 5/16" (17.6 cm)
F. 7 7/8" (30 cm)
G. Control wire entrance
H. Flue exhaust hood
I. Control access panel
J. 5 1/4" (13.3 cm)
K. Combustion air intake

Minimum Clearances

NOTE: Roof overhang should be no more than 36" (91.4 cm).

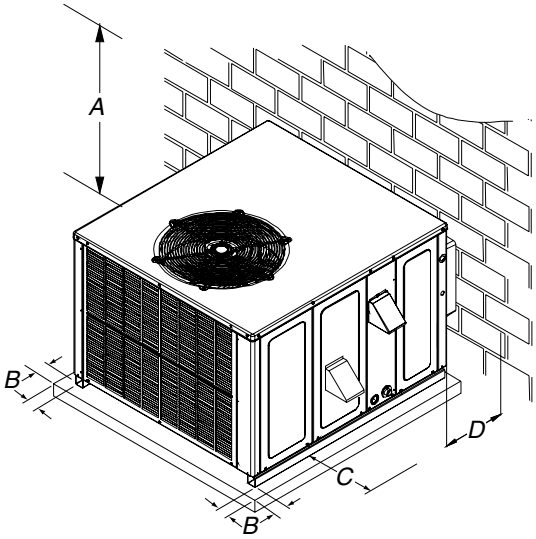

A. 48" (121.9 cm) minimum
B. 12" (30.5 cm) minimum
C. 36" (91.4 cm) minimum service access
D. 3" (7.6 cm) minimum

Wiring Diagram—WGGE4324, 30, 36, 42

⚠ WARNING

HIGH VOLTAGE!

Disconnect ALL power before servicing.
Multiple power sources may be present.
Failure to do so may cause property damage, personal injury or death.

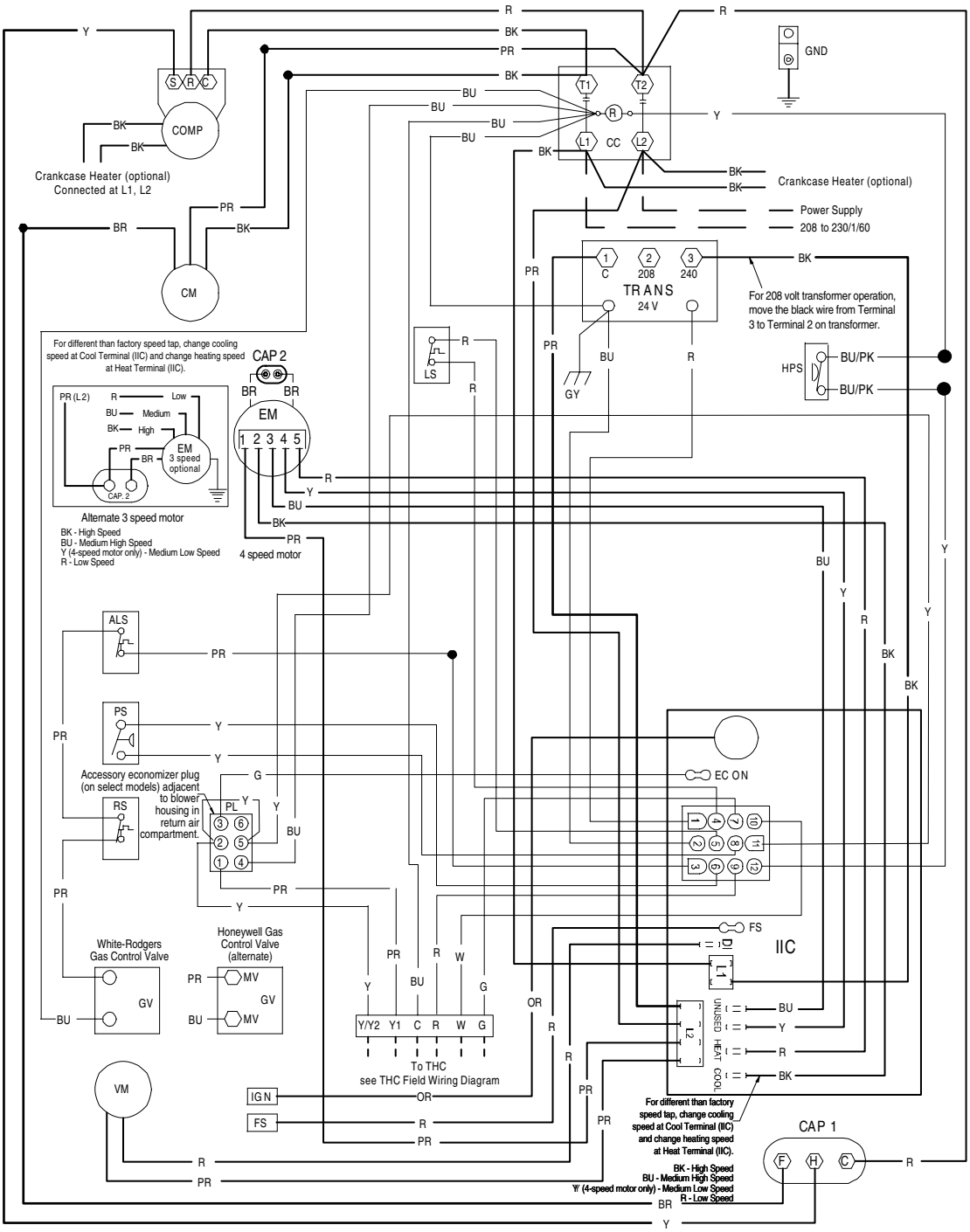

IMPORTANT:
Wiring is subject to change. Always refer to the wiring diagram on the unit for the most up-to-date wiring. Replacement wire must be the same size and type of insulation as original (use copper conductor only).

Wiring Diagram—WGGE4324, 30, 36, 42

⚠ WARNING

HIGH VOLTAGE!

Disconnect ALL power before servicing.
Multiple power sources may be present.
Failure to do so may cause property damage, personal injury or death.

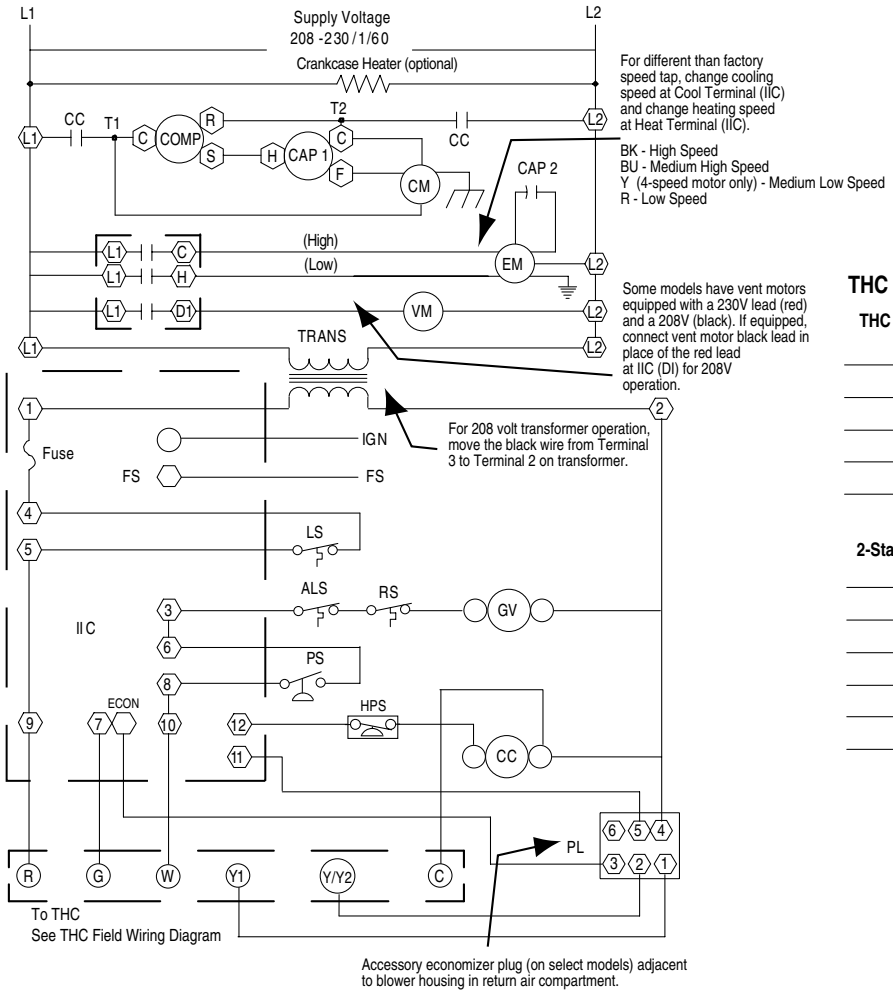

THC Field Wiring Diagram

THC - No Economizer

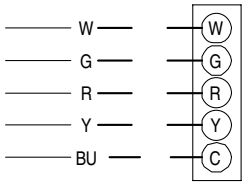

2-Stage Cooling

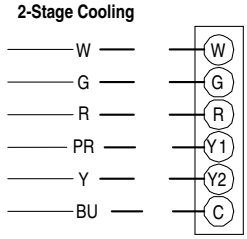

ALS	Auxillary Limit Switch
CAP	Capacitor
COMP	Compressor
CM	Condenser Motor
CC	Contactor
CH	Crankcase Heater
EM	Evaporator Motor
FS	Flame Sensor
GV	Gas Control Valve
IIC	Integrated Ignition Control
IGN	Igniter
LS	Limit Switch
PL	Plug
PS	Pressure Switch
RS	Rollout Switch
THC	Thermostat Heat and Cool
TRANS	Transformer
VM	Vent Motor

BK	Black
BU	Blue
BR	Brown
G	Green
OR	Orange
PK	Pink
PR	Purple
R	Red
W	White
Y	Yellow
	Wire Splice
	Marked Terminal
	Unmarked Terminal
	Line Voltage
	Low Voltage
	Field Installed Power
	Field Installed Control

IMPORTANT:
Wiring is subject to change. Always refer to the wiring diagram on the unit for the most up-to-date wiring. Replacement wire must be the same size and type of insulation as original (use copper conductor only).

Wiring Diagram—WGGE4348, 60

⚠ WARNING

HIGH VOLTAGE!

Disconnect ALL power before servicing.
Multiple power sources may be present.
Failure to do so may cause property damage, personal injury or death.

NOTE: Wiring is subject to change. Always refer to the wiring diagram on the unit for the most up-to-date wiring.

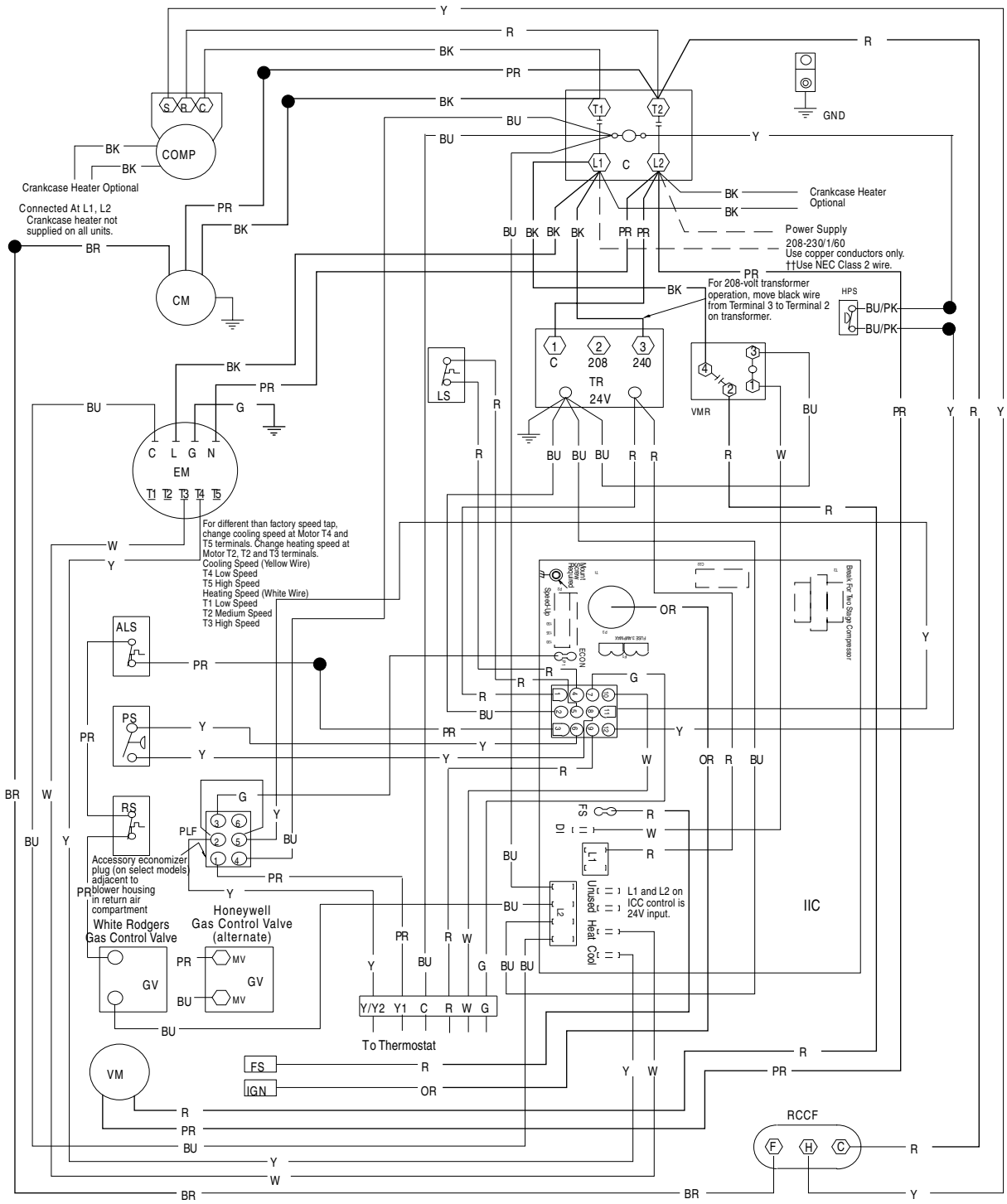

Wiring Diagram—WGGE4348, 60

⚠ WARNING

HIGH VOLTAGE!

Disconnect ALL power before servicing.
Multiple power sources may be present.
Failure to do so may cause property damage, personal injury or death.

NOTE: Wiring is subject to change. Always refer to the wiring diagram on the unit for the most up-to-date wiring.

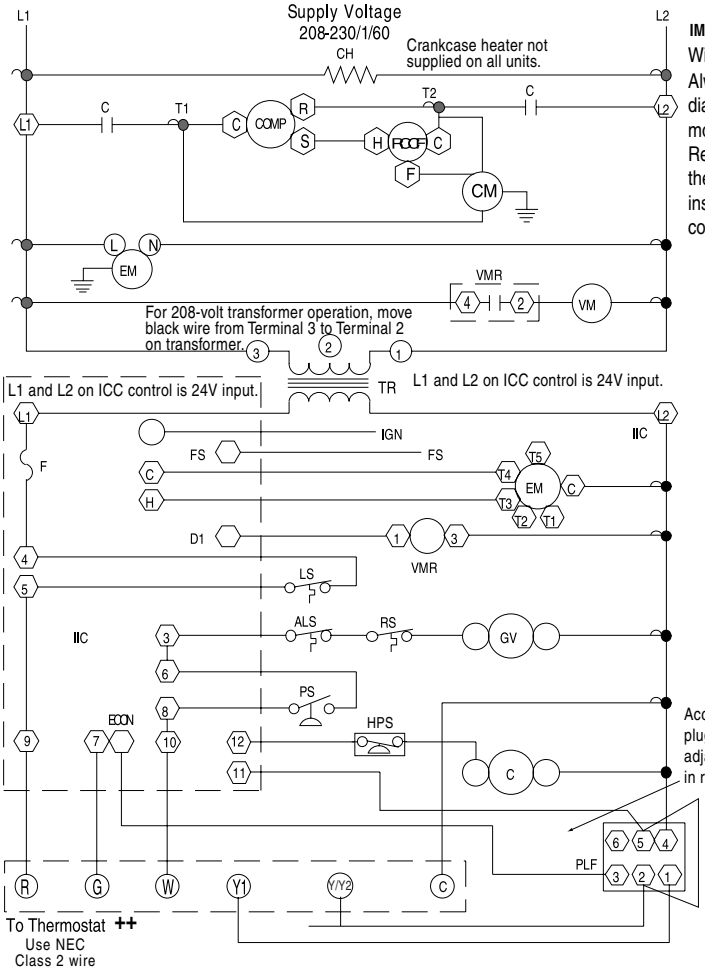

IMPORTANT:
Wiring is subject to change. Always refer to the wiring diagram on the unit for the most up-to-date wiring. Replacement wire must be the same size and type of insulation as original (use copper conductor only).

ALS	Auxillary Limit Switch
COMP	Compressor
CM	Condenser Motor
C	Contactor
CH	Crankcase Heater
EM	Evaporator Motor
F	Fuse
FC	Fan Capacitor
FS	Flame Sensor
GND	Equipment Ground
GV	Gas Control Valve
IIC	Integrated Ignition Control
IGN	Igniter
LS	Limit Switch
PLF	Female Plug/Connector
PS	Pressure Switch
RS	Rollout Switch
TR	Transformer
VM	Vent Motor
VMR	Vent Motor Relay
BK	Black
BU	Blue
BR	Brown
G	Green
OR	Orange
PK	Pink
PR	Purple
R	Red
W	White
Y	Yellow
	Wire Splice
	Marked Terminal
	Unmarked Terminal
	Line Voltage
	Low Voltage
	Field Installed Power
	Field Installed Control

Thermostat Field Wiring ++

No Economizer

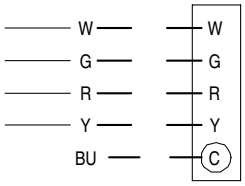

2-Stage Cooling With Economizer

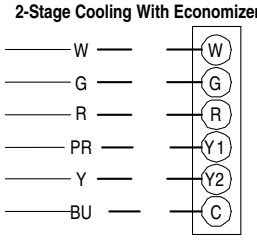

ASSISTANCE OR SERVICE

If you need further assistance, you can write to the below address with any questions or concerns:

Tradewinds Distributing Company, LLC
14610 Breakers Drive
Jacksonville, FL 32258

Please include a daytime phone number in your correspondence.

Or call toll free: 1-866-944-7575.

© 2010. All rights reserved.

®Registered Trademark/TM Trademark of Whirlpool, U.S.A.,
Manufactured under license by Tradewinds Distributing Company, LLC, Jacksonville, Florida.
Warranty provided by manufacturer. All other trademarks are owned by their respective companies.
4/10
Printed in U.S.A.