Janitrol SINCE 1890 air conditioning & heating

GMP

Multi-Position, Induced Draft Gas Furnace

Product Specifications

The GMP multi-position induced draft gas furnace unit is factory-tested for heating or combination heating/cooling applications. It may be installed in a utility room, closet, alcove, basement, or attic.

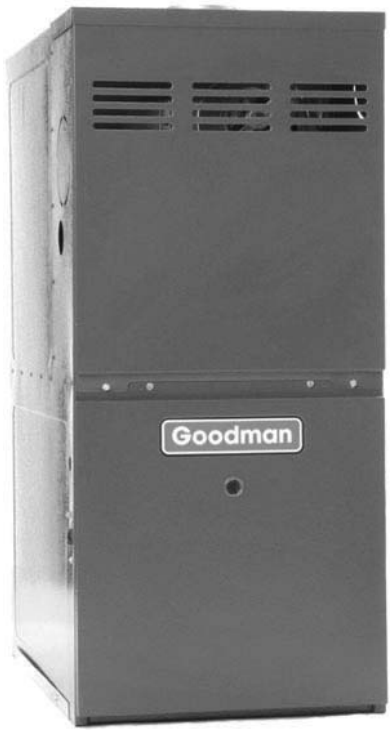

220V-50 Hz-1 Ph

Nominal Capacities:
64,500 to 129,000 BTU/h
[18.9 to 37.8 kW]

CE

Standard Features

- Energy-saving, reliable direct spark igniter
- Energy-saving PSC, three-speed, direct-drive blower motors
- Corrosion-resistant, aluminized-steel tubular heat exchanger
- Quiet operating, sound-insulated blower assembly
- Quiet, corrosion-resistant, rotating induced-draft blower for venting through the top, right or left side
- Integrated furnace control with diagnostics
- Low-voltage terminal blocks
- Combination redundant gas valve and regulator
- Aluminized steel in-shot burners
- Blower door safety switch
- Multiple flame roll-out switches; Outlet air limit switch
- Pressure switch for proof of air

Cabinet Features

- Heavy-gauge, reinforced, wrap-around insulated, steel cabinet with durable baked-enamel finish
- Foil-face insulation lines the heat exchanger compartment
- Coil and furnace fit flush for easy installation
- Multi-position installation — upflow, horizontal right or left
- Convenient left or right connection for gas and electric service
- All models can be vertically vented with a water heater using a B-1 vent
- Bottom or side air inlet; Removable, solid bottom

Accessories

- LP Conversion Kit (LPM-01)
- Sidewall venting (SVB-80-5)

DIMENSIONS (MM)

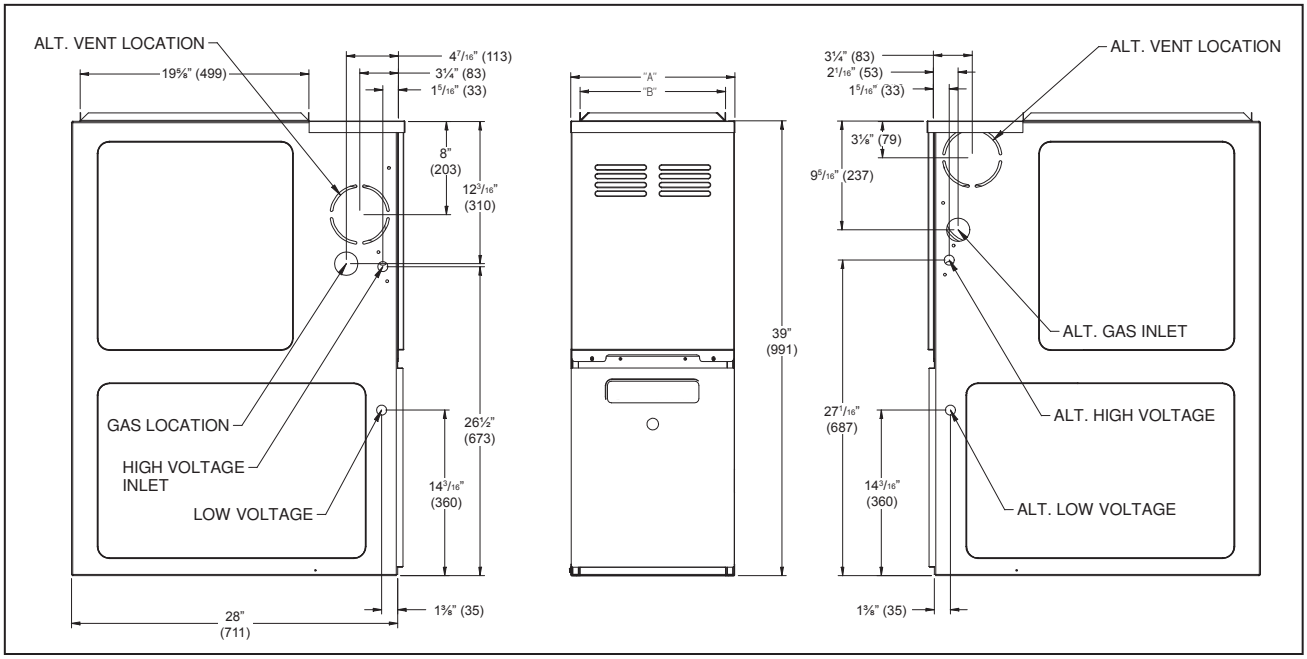

Model	A (MM)	B (MM)
GMP075-32	14″ (356)	12½″ (318)
GMP100-42	17½″ (445)	16″ (406)

Model	A (MM)	B (MM)
GMP125-52	21″ (533)	19½″ (495)
GMP150-52	24½″ (622)	23″ (584)

CLEARANCES FOR COMBUSTIBLE MATERIAL (MM)

Sides	Rear	Front[1]	Vent[2]		Top
			SW	B-1	
1″ (25)	0″	3″ (76)	6″ (152)	1″ (25)	1″ (25)

[1] 24″ (610 mm) clearance for serviceability recommended.

[2] Single Wall Vent (SW) to be used only as a connector.

Specifications

Electrical Characteristics 220/1/50; Gas Service Connection ½" Bpt

	GMP075-32	GMP100-42	GMP125-52	GMP150-52
Heating Capacity				
Input BTU/h[1] [kW-h]	64,500 [18.9]	86,000 [25.2]	107,500 [31.5]	129,000 [37.8]
Natural Gas Output BTU/h[1] [kW-h]	51,600 [15.1]	68,800 [20.2]	86,000 [25.2]	103,200 [30.3]
Steady State Efficiency (SSE)	80%	80%	80%	80%
Cooling SCFM @ 0.5" ESP [Cooling Cubic Meters / Hr.]	1,364 [38.6]	1,580 [44.8]	1,960 [55.5]	2,050 [58.1]
Temperature Rise Range °F [°C]	35-65 [19-36]	35-65 [19-36]	35-65 [19-36]	35-65 [19-36]
Circulator Blower				
Size: Dia." x Width" [mm]	10" x 6" [254 x 152]	10" x 8" [254 x 203]	10" x 10" [254 x 254]	11" x 10" [279 x 254]
Horsepower	¾	¾	1	1
Speeds	3	3	3	3
Vent Diameter In. [mm]	4" [102]	4" [102]	4" [102]	4" [102]
No. of Burners	3	4	5	6
Filter Size (in^2 [cm^2])				
Permanent[2]	188 [1213]	278 [1794]	303 [1955]	347 [2238]
Disposable[3]	375 [2419]	555 [3581]	606 [3910]	649 [4187]
Electrical Data				
Power Supply [Volts/Hz/Ph]	220 / 50 / 1	220 / 50 / 1	220 / 50 / 1	220 / 50 / 1
FLA	5.51	5.51	7.92	7.92
Min. Circuit Ampacity[4]	7	7	9.7	9.7
Max. Overcurrent Protection [amps][5]	15	15	15	15
Ship Weight (lbs [kg])	130 [59]	153 [70]	163 [74]	183 [83]

1 Natural Gas BTU/h. For altitudes above 2,000', reduce input rating 4% for each 1,000' above sea level.
2 Permanent air filter size is based on 600 FPM (183 meters per minute) face velocity. Check with filter manufacturer for specific details.
3 Disposable air filter size is based on 300 FPM (91.5 meters per minute) face velocity. Check with filter manufacturer for specific details.
4 Minimum Circuit Ampacity = (1.25 x Circulator Blower Amps) + ID Blower amps. Wire size should be determined in accordance with
5 Refers to maximum recommended fuse or circuit breaker size. May use fuses or HACR-type circuit breakers of the same size as noted.

Notes

- All furnaces are manufactured for use on 230 VAC, 50 Hz, single-phase electrical supply.
- Gas Service Connection ½" BPT
- **Important:** Size fuses and wires properly and make electrical connections in accordance with all existing local codes.

AIRFLOW DATA

(Standard CFM & Temperature Rise vs. External Static Pressure)															
Furnace Model Motor HP (Rise Range)	Motor Speed	Tons AC @ 0.5" ESP	External Static Pressure (Inches Water Column)												
			0.1		0.2		0.3		0.4		0.5		0.6	0.7	0.8
			CFM	RISE	CFM	RISE	CFM	RISE	CFM	RISE	CFM	RISE	CFM	CFM	CFM
GMP075-32	HIGH	3.5	1544	31	1503	32	1447	33	1413	34	1364	35	1318	1275	1220
¾ HP	MED	3.0	1347	35	1309	36	1270	38	1233	39	1191	40	1150	1097	1043
(35-65)	LOW	2.5	1192	40	1163	41	1129	42	1074	44	1038	46	1000	952	913
GMP100-42	HIGH	4.0	1693	38	1660	38	1641	39	1603	40	1580	40	1536	1488	1441
¾ HP	MED	3.5	1429	45	1413	45	1388	46	1364	47	1338	48	1306	1262	1219
(35-65)	LOW	3.0	1278	50	1254	51	1236	52	1208	53	1168	55	1135	1106	1074
GMP125-52	HIGH	5.0	2184	36	2122	38	2078	38	2021	39	1960	41	1906	1817	1743
1 HP	MED	4.0	1886	42	1828	44	1795	44	1744	46	1696	47	1641	1576	1514
(35-65)	LOW	3.5	1649	48	1601	50	1542	52	1486	54	1424	56	1367	1284	1212
GMP150-52	HIGH	5.0	2114	45	2065	46	2044	47	1968	49	1905	50	1857	1783	1705
1 HP	MED	4.0	1795	53	1736	55	1691	57	1646	58	1590	60	1532	1461	1378
(35-65)	LOW	3.5	1603	60	1552	62	1502	64	1446	66	1398	68	1344	1263	1186

Notes:

1. CFM in chart is without filter(s). Filters do not ship with this furnace, but must be provided by the installer. If the furnace requires two return filters, this chart assumes both filters are installed.
2. All furnaces ship as high-speed cooling. Installer must adjust blower cooling speed as needed.
3. For most jobs, about 400 CFM per ton when cooling is desirable.
4. INSTALLATION IS TO BE ADJUSTED TO OBTAIN TEMPERATURE RISE WITHIN THE RANGE SPECIFIED ON THE RATING PLATE.
5. The chart is for information only. For satisfactory operation, external static pressure must not exceed value shown on the rating plate. The shaded area indicates ranges in excess of maximum static pressure allowed when heating.

Goodman Manufacturing Company, L.P., reserves the right to discontinue, or change at any time, specifications or designs without notice or without incurring obligations. Copyright © 2008 • Goodman Manufacturing Company, L.P. • Houston, Texas • Printed in the USA.