Goodman
Air Conditioning & Heating

GSZ14

Cooling Capacity: 18,000 to 60,000 BTU/h

Heating Capacity: 18,000 to 60,000 BTU/h

Energy-Efficient Split System Heat Pump Up to 15 SEER & 9.0 HSPF 1½ to 5 Tons

Contents

Nomenclature 2
Product Specifications 3
Expanded Cooling Data 5
Expanded Heating Data 33
Performance Data 36
Dimensions 39
Wiring Diagram 40
Accessories 41

ASK ABOUT ENERGY STAR

Proper sizing and installation of equipment is critical to achieving optimal performance. Split system air conditioners and heat pumps must be matched with appropriate coil components to meet ENERGY STAR® criteria. Ask your contractor for details or visit www.energystar.gov.

Standard Features

- High-efficiency scroll compressor
- SmartShift® technology to ensure quiet reliable defrost
- Factory-installed bi-flow liquid-line filter drier
- Factory-installed suction-line accumulator
- Factory-installed compressor crankcase heater
- Factory-installed high-capacity muffler
- High- and low-pressure switches
- Service valves with sweat connections and easy access to gauge ports
- Copper tube/enhanced aluminum fin coil
- Fully charged for 15’ of tubing length
- Contactor with lug connection
- Ground lug connection
- AHRI Certified; ETL Listed

Cabinet Features

- Goodman® brand sound control top design
- Steel louver coil guard
- Heavy-gauge galvanized-steel cabinet
- Attractive Architectural Gray powder-paint finish with 500-hour salt-spray approval
- Top and side maintenance access
- Service ports and controls are accessible while unit is operating
- When properly anchored, meets the 2017 Florida Building Code unit integrity requirements for hurricane-type winds (Anchor bracket kits available.)

10 YEAR PARTS LIMITED WARRANTY*

Intertek

COMPANY WITH QUALITY SYSTEM CERTIFIED BY DNV GL = ISO 9001 =

COMPANY WITH ENVIRONMENTAL SYSTEM CERTIFIED BY DNV GL = ISO 14001 =

BBB ACCREDITED BUSINESS

* Complete warranty details available from your local dealer or at www.goodmanmfg.com. To receive the 10-Year Parts Limited Warranty, online registration must be completed within 60 days of installation. Online registration is not required in California or Quebec. The duration of warranty coverages in Texas differs in some cases.

G	S	Z	14	036	1	AA
1	2	3	4,5	6,7,8	9	10,11

Brand

G Goodman® Brand

Product Category

S Split System

Unit Type

X Condenser R-410A

Z Heat Pump R-410A

Efficiency

13 13 SEER

14 14 SEER

16 16 SEER

18 18 SEER

Nominal Capacity

018- 1½ tons

024- 2 tons

030- 2½ tons

036- 3 tons

042 3½ Tons

048 4 Tons

060 5 Tons

Electrical

1- 208/230 V, 1 Phase, 60 Hz

Engineering *

Major & Minor revisions

* Not used for inventory control.

	GSZ14 0181L*	GSZ14 0191A*	GSZ14 0241K*	GSZ14 0241L*	GSZ14 0251A*	GSZ14 0301K*	GSZ14 0311A*
NOMINAL CAPACITIES							
Cooling (BTU/h)	18,000	17,400	24,000	23,000	23,200	30,000	28,000
Heating (BTU/h)	18,000	18,000	24,000	23,000	23,200	30,000	31,000
Decibels	74	72	72	72	72	74	75
COMPRESSOR							
RLA	6.0	9.0	10.9	7.7	10.9	13.5	13.5
LRA	37.5	47.5	62.9	38.0	62.9	72.5	72.5
Type	Rotary	Scroll	Scroll	Rotary	Scroll	Scroll	Scroll
CONDENSER FAN MOTOR							
Horsepower	1/6	1/6	1/6	1/6	1/6	1/6	1/6
FLA	0.95	1.1	0.95	0.95	1.1	0.95	1.10
REFRIGERATION SYSTEM							
Refrigerant Line Size[1]							
Liquid Line Size (“O.D.)	⅜"	⅜"	⅜"	⅜"	⅜"	⅜"	⅜"
Suction Line Size (“O.D.)	¾"	¾"	¾"	¾"	¾"	¾"	¾"
Refrigerant Connection Size							
Liquid Valve Size (“O.D.)	⅜"	⅜"	⅜"	⅜"	⅜"	⅜"	⅜"
Suction Valve Size (“O.D.)	¾"	¾"	¾"	¾"	¾"	¾"	¾”
Standard Line Set Length (max. feet)	80	80	80	80	80	80	80
Long Line Set Length (max. feet) [2]							
Equivalent Length	150	250	250	150	250	250	250
Linear Length	150	200	200	150	200	200	200
Vertical Length (outdoor below indoor)	80	80	80	80	80	80	80
Vertical Length (outdoor above indoor)	80	200	80	80	200	80	200
Valve Connection Type	Sweat	Sweat	Sweat	Sweat	Sweat	Sweat	Sweat
Refrigerant Charge (oz.)	127	108	108	126	108	108	160
ELECTRICAL DATA							
Volts/Phase (60 Hz)	208-230/1	208-230/1	208-230/1	208-230/1	208-230/1	208-230/1	208-230/1
Minimum Circuit Ampacity [3]	8.5	12.4	14.6	10.6	14.7	17.8	17.9
Max. Overcurrent Protection [4]	15	20	25	15	25	30	30
Min / Max Volts	197 / 253	197 / 253	197 / 253	197 / 253	197 / 253	197 / 253	197/253
Electrical Conduit Size	½" or ¾"	½" or ¾"	½" or ¾"	½" or ¾"	½" or ¾"	½" or ¾"	1/2" or 3/4"
UNIT WEIGHTS							
Equipment Weight (lbs.)	143	143	143	143	143	171	186
Ship Weight (lbs)	154	154	154	154	154	182	206
ENERGY STAR® CERTIFIED ^		NO			NO		NO

^ **Energy Star Notes**

Proper sizing and installation of equipment is critical to achieving optimal performance. Split system air conditioners and heat pumps must be matched with appropriate coil components to meet ENERGY STAR® criteria. Ask your contractor for details or visit www.energystar.gov. The www.energystar.gov website provides up-to-date system combinations certified to meet ENERGY STAR® requirements.

[1] Tested and rated in accordance with ARI Standard 210/240
[2] Reference TP-107* for additional application requirements
[3] Wire size should be determined in accordance with National Electrical Codes; extensive wire runs will require larger wire sizes
[4] Must use time-delay fuses or HACR-type circuit breakers of the same size as noted.

NOTES

- Always check the S&R plate for electrical data on the unit being installed.
- Installer will need to supply ⅞” to 1⅛” adapters for suction line connections.
- Unit is charged with refrigerant for 15’ of ⅜” liquid line. System charge must be adjusted per Installation Instructions Final Charge Procedure.
- Installation of these units may require the specified TXV Kit to be installed on the indoor coil. THE SPECIFIED TXV IS DETERMINED BY THE OUTDOOR UNIT NOT THE INDOOR COIL.

	GSZ14 0361K*	GSZ14 0361L*	GSZ14 0371A*	GSZ14 0421K*	GSZ14 0481K*	GSZ14 0491K*	GSZ14 0601K*
NOMINAL CAPACITIES							
Cooling (BTU/h)	36,000	36,000	33,000	42,000	48,000	48,000	60,000
Heating (BTU/h)	36,000	36,000	34,000	42,000	48,000	48,000	60,000
Decibels	74	74	73	75	75	76	76
COMPRESSOR							
RLA	15.4	14.7	14.1	16.7	18.5	19.9	26.4
LRA	83.9	75.0	72.2	109.0	124.0	109.0	134.0
Type	Scroll	Scroll	Scroll	Scroll	Scroll	Scroll	Scroll
CONDENSER FAN MOTOR							
Horsepower	1/6	1/6	1/4	1/6	1/4	1/6	1/4
FLA	0.95	0.95	1.30	1.1	1.30	1.1	1.30
REFRIGERATION SYSTEM							
Refrigerant Line Size[1]							
Liquid Line Size (“O.D.)	⅜"	⅜"	⅜"	⅜"	⅜"	⅜"	⅜"
Suction Line Size (“O.D.)	⅞"	⅞"	⅞"	1⅛"	1⅛"	1⅛"	1⅛"
Refrigerant Connection Size							
Liquid Valve Size (“O.D.)	⅜"	⅜"	⅜"	⅜"	⅜"	⅜"	⅜"
Suction Valve Size (“O.D.)	¾"	¾"	⅞"	⅞"	⅞”	⅞"	⅞"
Standard Line Set Length (max. feet)	80	80	80	80	80	80	80
Long Line Set Length (max. feet) [2]							
Equivalent Length	250	250	250	250	250	250	250
Linear Length	200	200	200	200	200	200	200
Vertical Length (outdoor below indoor)	80	80	80	80	80	80	80
Vertical Length (outdoor above indoor)	80	80	200	80	80	80	80
Valve Connection Type	Sweat	Sweat	Sweat	Sweat	Sweat	Sweat	Sweat
Refrigerant Charge	115	125	175	153	157	192	205
ELECTRICAL DATA							
Volts/Phase (60 Hz)	208-230/1	208-230/1	208-230/1	208-230/1	208-230/1	208-230/1	208-230/1
Minimum Circuit Ampacity [3]	20.2	19.3	18.9	22.0	24.4	26.0	34.3
Max. Overcurrent Protection [4]	35	30	30	35	40	45	60
Min / Max Volts	197 / 253	197 / 253	197/253	197 / 253	197 / 253	197 / 253	197 / 253
Electrical Conduit Size	½" or ¾"	½" or ¾"	1/2" or 3/4"	½" or ¾"	½" or ¾"	½" or ¾"	½" or ¾"
UNIT WEIGHTS							
Equipment Weight (lbs.)	173	173	220	191	226	273	277
Ship Weight (lbs)	184	184	240	207	237	288	292
ENERGY STAR® CERTIFIED ^	ENERGY STAR	ENERGY STAR	NO	ENERGY STAR	ENERGY STAR	NO	NO

^ **Energy Star Notes**

Proper sizing and installation of equipment is critical to achieving optimal performance. Split system air conditioners and heat pumps must be matched with appropriate coil components to meet ENERGY STAR® criteria. Ask your contractor for details or visit www.energystar.gov.

The www.energystar.gov website provides up-to-date system combinations certified to meet ENERGY STAR® requirements.

1 Tested and rated in accordance with ARI Standard 210/240
2 Reference TP-107* for additional application requirements
3 Wire size should be determined in accordance with National Electrical Codes; extensive wire runs will require larger wire sizes
4 Must use time-delay fuses or HACR-type circuit breakers of the same size as noted.

NOTES

- Always check the S&R plate for electrical data on the unit being installed.
- Installer will need to supply ⅞” to 1⅛” adapters for suction line connections.
- Unit is charged with refrigerant for 15’ of ⅜” liquid line. System charge must be adjusted per Installation Instructions Final Charge Procedure.
- Installation of these units requires the specified TXV Kit to be installed on the indoor coil. THE SPECIFIED TXV IS DETERMINED BY THE OUTDOOR UNIT NOT THE INDOOR COIL.

Expanded Cooling Data — GSZ140181L* + ARUF25B14** + TXV

			Outdoor Ambient Temperature																							
			65ºF				75ºF				85ºF				95ºF				105ºF				115ºF			
			Entering Indoor Wet Bulb Temperature																							
IDB	Airflow		59	63	67	71	59	63	67	71	59	63	67	71	59	63	67	71	59	63	67	71	59	63	67	71
70	525	MBh	17.6	17.8	18.4	-	17.4	17.7	18.2	-	17.0	17.2	17.8	-	16.2	16.4	17.0	-	15.2	15.5	16.0	-	14.3	14.6	15.1	-
		S/T	0.59	0.51	0.37	-	0.60	0.52	0.38	-	0.63	0.54	0.40	-	1.00	0.57	0.42	-	1.00	0.59	0.45	-	1.00	0.64	0.50	-
		ΔT	57	52	42	-	57	52	42	-	58	52	43	-	57	52	42	-	56	51	42	-	59	54	45	-
		kW	1.04	1.04	1.04	-	1.16	1.16	1.15	-	1.28	1.28	1.28	-	1.42	1.42	1.42	-	1.58	1.57	1.57	-	1.76	1.75	1.75	-
		Amps	3.9	3.9	3.9	-	4.5	4.5	4.5	-	5.0	5.0	5.0	-	5.7	5.7	5.7	-	6.4	6.4	6.4	-	7.2	7.2	7.2	-
		HI PR	237	238	239	-	274	275	277	-	313	314	316	-	356	357	358	-	401	402	404	-	450	451	453	-
		LO PR	126	128	131	-	134	135	139	-	141	142	145	-	146	148	151	-	152	154	157	-	159	161	164	-
	610	MBh	17.8	18.0	18.6	-	17.6	17.9	18.4	-	17.2	17.4	17.9	-	16.4	16.6	**17.1**	-	15.4	15.6	16.2	-	14.5	14.8	15.3	-
		S/T	0.67	0.59	0.44	-	0.67	0.59	0.45	-	0.70	0.62	0.48	-	1.00	0.64	**0.50**	-	1.00	0.66	0.52	-	1.00	0.72	0.58	-
		ΔT	54	49	39	-	54	49	39	-	54	49	40	-	54	49	**39**	-	53	48	38	-	56	51	42	-
		kW	1.05	1.05	1.05	-	1.16	1.16	1.16	-	1.29	1.29	1.29	-	1.43	1.43	**1.43**	-	1.58	1.58	1.58	-	1.76	1.76	1.76	-
		Amps	4.0	4.0	4.0	-	4.5	4.5	4.5	-	5.1	5.1	5.1	-	5.7	5.7	**5.7**	-	6.4	6.4	6.4	-	7.2	7.2	7.2	-
		HI PR	239	240	241	-	276	277	279	-	315	316	318	-	358	359	**360**	-	403	404	406	-	452	453	455	-
		LO PR	128	129	133	-	136	137	140	-	142	144	147	-	148	150	**153**	-	154	155	158	-	161	162	165	-
	675	MBh	17.9	18.2	18.7	-	17.8	18.0	18.6	-	17.3	17.6	18.1	-	16.5	16.8	17.3	-	15.5	15.8	16.3	-	14.7	14.9	15.4	-
		S/T	0.70	0.62	0.48	-	0.71	0.63	0.49	-	1.00	0.66	0.51	-	1.00	0.68	0.53	-	1.00	0.70	0.56	-	1.00	0.75	0.61	-
		ΔT	52	47	37	-	52	47	37	-	53	47	38	-	52	47	37	-	51	46	36	-	54	49	40	-
		kW	1.05	1.05	1.05	-	1.17	1.17	1.16	-	1.29	1.29	1.29	-	1.43	1.43	1.43	-	1.58	1.58	1.58	-	1.77	1.76	1.76	-
		Amps	4.0	4.0	4.0	-	4.5	4.5	4.5	-	5.1	5.1	5.1	-	5.7	5.7	5.7	-	6.4	6.4	6.4	-	7.2	7.2	7.2	-
		HI PR	240	241	242	-	277	278	280	-	317	318	319	-	359	360	362	-	405	406	407	-	453	454	456	-
		LO PR	129	131	134	-	137	138	142	-	143	145	148	-	149	151	154	-	155	156	160	-	162	163	167	-
75	525	MBh	17.6	17.9	18.4	19.2	17.4	17.7	18.2	19.0	17.0	17.2	17.8	18.6	16.2	16.4	17.0	17.8	15.2	15.5	16.0	16.8	14.3	14.6	15.1	15.9
		S/T	0.73	0.65	0.50	0.40	1.00	0.65	0.51	0.40	1.00	0.68	0.54	0.40	1.00	0.70	0.56	0.40	1.00	0.72	0.58	0.40	1.00	1.00	0.64	0.50
		ΔT	68	63	54	44	68	63	53	44	69	64	54	44	68	63	53	44	67	62	53	43	71	65	56	46
		kW	1.04	1.04	1.04	1.00	1.16	1.16	1.15	1.20	1.28	1.28	1.28	1.30	1.42	1.42	1.42	1.40	1.57	1.57	1.57	1.60	1.75	1.75	1.75	1.80
		Amps	3.9	3.9	3.9	4.0	4.5	4.5	4.4	4.5	5.0	5.0	5.0	5.1	5.7	5.7	5.7	5.7	6.4	6.4	6.4	6.4	7.2	7.2	7.2	7.2
		HI PR	237	238	239	244	274	275	277	281	314	315	316	320	356	357	359	363	402	403	404	408	450	451	453	457
		LO PR	126	128	131	136	134	135	139	144	141	142	145	151	146	148	151	157	152	154	157	162	159	161	164	169
	610	MBh	17.8	18.0	18.6	19.4	17.6	17.9	18.4	19.2	17.2	17.4	18.0	18.8	16.4	16.6	17.2	18.0	15.4	15.7	16.2	17.0	14.5	14.8	15.3	16.1
		S/T	0.80	0.72	0.58	0.40	1.00	0.73	0.59	0.40	1.00	0.76	0.61	0.50	1.00	0.78	0.63	0.50	1.00	1.00	0.66	0.50	1.00	1.00	0.71	0.60
		ΔT	65	60	50	41	65	60	50	40	66	60	51	41	65	60	50	40	64	59	50	40	67	62	53	43
		kW	1.05	1.05	1.05	1.10	1.16	1.16	1.16	1.20	1.29	1.29	1.29	1.30	1.43	1.43	1.42	1.40	1.58	1.58	1.58	1.60	1.76	1.76	1.76	1.80
		Amps	4.0	4.0	4.0	4.0	4.5	4.5	4.5	4.5	5.1	5.1	5.1	5.1	5.7	5.7	5.7	5.7	6.4	6.4	6.4	6.4	7.2	7.2	7.2	7.2
		HI PR	239	240	241	246	276	277	279	283	316	317	318	322	358	359	361	365	404	405	406	410	452	453	455	459
		LO PR	128	129	133	138	136	137	140	146	142	144	147	153	148	150	153	158	154	155	158	164	161	162	166	171
	675	MBh	17.9	18.2	18.7	19.5	17.8	18.0	18.6	19.4	17.3	17.6	18.1	18.9	16.5	16.8	17.3	18.1	15.6	15.8	16.3	17.1	14.7	14.9	15.4	16.3
		S/T	0.84	0.76	0.62	0.50	1.00	0.77	0.62	0.50	1.00	0.79	0.65	0.50	1.00	0.81	0.67	0.50	1.00	1.00	0.69	0.50	1.00	1.00	0.75	0.60
		ΔT	63	58	49	39	63	58	48	39	64	59	49	39	63	58	48	39	62	57	48	38	65	60	51	41
		kW	1.05	1.05	1.05	1.10	1.17	1.17	1.16	1.20	1.29	1.29	1.29	1.30	1.43	1.43	1.43	1.40	1.58	1.58	1.58	1.60	1.76	1.76	1.76	1.80
		Amps	4.0	4.0	4.0	4.0	4.5	4.5	4.5	4.5	5.1	5.1	5.1	5.1	5.7	5.7	5.7	5.7	6.4	6.4	6.4	6.4	7.2	7.2	7.2	7.3
		HI PR	240	241	243	247	277	279	280	284	317	318	319	324	359	360	362	366	405	406	407	412	453	454	456	460
		LO PR	129	131	134	139	137	138	142	147	144	145	148	154	149	151	154	159	155	156	160	165	162	163	167	172

IDB: Entering Indoor Dry Bulb Temperature

High and low pressures are measured at the liquid and suction service valves.

Shaded area reflects AHRI Rating Conditions.

kW = Total system power

Amps = Outdoor unit amps (compressor + fan)

			Outdoor Ambient Temperature																							
			65ºF				75ºF				85ºF				95ºF				105ºF				115ºF			
			Entering Indoor Wet Bulb Temperature																							
IDB	Airflow		59	63	67	71	59	63	67	71	59	63	67	71	59	63	67	71	59	63	67	71	59	63	67	71
80	525	MBh	17.7	17.9	18.5	19.3	17.5	17.8	18.3	19.1	17.1	17.3	17.9	18.7	16.3	16.5	17.1	17.9	15.3	15.6	16.1	16.9	14.4	14.7	15.2	16.0
		S/T	1.00	0.78	0.64	0.50	1.00	0.79	0.64	0.50	1.00	0.81	0.67	0.50	1.00	1.00	0.69	0.50	1.00	1.00	0.71	0.60	1.00	1.00	0.77	0.60
		ΔT	79	74	65	55	79	74	65	55	80	75	65	56	79	74	65	55	79	73	64	54	82	77	67	57
		kW	1.04	1.04	1.04	1.00	1.16	1.16	1.15	1.20	1.28	1.28	1.28	1.30	1.42	1.42	1.42	1.40	1.58	1.57	1.57	1.60	1.76	1.75	1.75	1.80
		Amps	3.9	3.9	3.9	4.0	4.5	4.5	4.4	4.5	5.0	5.0	5.0	5.1	5.7	5.7	5.7	5.7	6.4	6.4	6.4	6.4	7.2	7.2	7.2	7.2
		Hi PR	237	238	240	244	275	276	277	282	314	315	317	321	356	357	359	363	402	403	405	409	451	452	453	458
		Lo PR	127	128	132	137	134	136	139	145	141	143	146	152	147	149	152	157	153	154	157	163	160	161	164	170
	610	MBh	17.9	18.1	18.7	19.5	17.7	18.0	18.5	19.3	17.3	17.5	18.0	18.9	16.5	16.7	17.3	18.1	15.5	15.8	16.3	17.1	14.6	14.9	15.4	16.2
		S/T	1.00	0.86	0.71	0.60	1.00	0.86	0.72	0.60	1.00	0.89	0.75	0.60	1.00	1.00	0.77	0.60	1.00	1.00	0.79	0.60	1.00	1.00	0.84	0.70
		ΔT	76	71	62	52	76	71	62	52	77	72	62	52	76	71	61	52	75	70	61	51	79	73	64	54
		kW	1.05	1.05	1.05	1.10	1.16	1.16	1.16	1.20	1.29	1.29	1.29	1.30	1.43	1.43	1.42	1.40	1.58	1.58	1.58	1.60	1.76	1.76	1.76	1.80
		Amps	4.0	4.0	4.0	4.0	4.5	4.5	4.5	4.5	5.1	5.1	5.1	5.1	5.7	5.7	5.7	5.7	6.4	6.4	6.4	6.4	7.2	7.2	7.2	7.3
		Hi PR	239	240	242	246	277	278	279	284	316	317	319	323	358	359	361	365	404	405	407	411	453	454	455	460
		Lo PR	128	130	133	139	136	138	141	146	143	144	148	153	149	150	153	159	154	156	159	165	161	163	166	172
	675	MBh	18.0	18.3	18.8	19.6	17.9	18.1	18.7	19.5	17.4	17.7	18.2	19.0	16.6	16.9	17.4	18.2	15.6	15.9	16.4	17.2	14.8	15.0	15.5	16.3
		S/T	1.00	0.89	0.75	0.60	1.00	0.90	0.75	0.60	1.00	1.00	0.78	0.60	1.00	1.00	0.80	0.70	1.00	1.00	0.83	0.70	1.00	1.00	1.00	0.70
		ΔT	74	69	60	50	74	69	60	50	75	70	60	51	74	69	60	50	74	68	59	49	77	72	62	52
		kW	1.05	1.05	1.05	1.10	1.17	1.17	1.16	1.20	1.29	1.29	1.29	1.30	1.43	1.43	1.43	1.40	1.58	1.58	1.58	1.60	1.77	1.76	1.76	1.80
		Amps	4.0	4.0	4.0	4.0	4.5	4.5	4.5	4.5	5.1	5.1	5.1	5.1	5.7	5.7	5.7	5.7	6.4	6.4	6.4	6.4	7.2	7.2	7.2	7.3
		Hi PR	240	241	243	247	278	279	281	285	317	318	320	324	360	361	362	366	405	406	408	412	454	455	457	461
		Lo PR	130	131	134	140	137	139	142	148	144	146	149	154	150	151	155	160	155	157	160	166	162	164	167	173
85	525	MBh	18.0	18.2	18.8	19.6	17.8	18.1	18.6	19.4	17.4	17.6	18.2	19.0	16.6	16.8	17.4	18.2	15.6	15.9	16.4	17.2	14.7	15.0	15.5	16.3
		S/T	1.00	0.89	0.74	0.60	1.00	1.00	0.75	0.60	1.00	1.00	0.78	0.60	1.00	1.00	0.80	0.60	1.00	1.00	1.00	0.70	1.00	1.00	1.00	0.70
		ΔT	89	84	75	65	89	84	75	65	90	85	75	66	89	84	75	65	89	83	74	64	92	87	77	67
		kW	1.05	1.04	1.04	1.10	1.16	1.16	1.16	1.20	1.29	1.29	1.28	1.30	1.42	1.42	1.42	1.40	1.58	1.58	1.57	1.60	1.76	1.76	1.75	1.80
		Amps	4.0	3.9	3.9	4.0	4.5	4.5	4.5	4.5	5.1	5.0	5.0	5.1	5.7	5.7	5.7	5.7	6.4	6.4	6.4	6.4	7.2	7.2	7.2	7.2
		Hi PR	238	239	241	245	276	277	279	283	315	316	318	322	357	359	360	364	403	404	406	410	452	453	455	459
		Lo PR	129	130	133	139	136	138	141	147	143	145	148	153	149	150	154	159	154	156	159	165	162	163	166	172
	610	MBh	18.2	18.4	19.0	19.8	18.0	18.3	18.8	19.6	17.6	17.8	18.3	19.2	16.8	**17.0**	17.6	18.4	15.8	16.0	16.6	17.4	14.9	15.2	15.7	16.5
		S/T	1.00	0.96	0.82	0.70	1.00	1.00	0.83	0.70	1.00	1.00	0.85	0.70	1.00	**1.00**	0.87	0.70	1.00	1.00	1.00	0.70	1.00	1.00	1.00	0.80
		ΔT	86	81	72	62	86	81	71	62	87	82	72	62	86	**81**	71	62	85	80	71	61	89	83	74	64
		kW	1.05	1.05	1.05	1.10	1.17	1.16	1.16	1.20	1.29	1.29	1.29	1.30	1.43	**1.43**	1.43	1.40	1.58	1.58	1.58	1.60	1.76	1.76	1.76	1.80
		Amps	4.0	4.0	4.0	4.0	4.5	4.5	4.5	4.5	5.1	5.1	5.1	5.1	5.7	**5.7**	5.7	5.7	6.4	6.4	6.4	6.4	7.2	7.2	7.2	7.3
		Hi PR	240	241	243	247	278	279	281	285	317	318	320	324	359	**360**	362	366	405	406	408	412	454	455	456	461
		Lo PR	130	132	135	141	138	140	143	148	145	146	150	155	151	**152**	155	161	156	158	161	166	163	165	168	173
	675	MBh	18.3	18.6	19.1	19.9	18.2	18.4	19.0	19.8	17.7	18.0	18.5	19.3	16.9	17.2	17.7	18.5	15.9	16.2	16.7	17.5	15.1	15.3	15.8	16.6
		S/T	1.00	1.00	0.86	0.70	1.00	1.00	0.86	0.70	1.00	1.00	0.89	0.70	1.00	1.00	0.91	0.80	1.00	1.00	1.00	0.80	1.00	1.00	1.00	0.80
		ΔT	84	79	70	60	84	79	70	60	85	80	70	61	84	79	70	60	84	78	69	59	87	82	72	62
		kW	1.05	1.05	1.05	1.10	1.17	1.17	1.17	1.20	1.30	1.29	1.29	1.30	1.43	1.43	1.43	1.40	1.59	1.59	1.58	1.60	1.77	1.77	1.76	1.80
		Amps	4.0	4.0	4.0	4.0	4.5	4.5	4.5	4.5	5.1	5.1	5.1	5.1	5.7	5.7	5.7	5.7	6.4	6.4	6.4	6.5	7.3	7.3	7.2	7.3
		Hi PR	242	243	244	248	279	280	282	286	318	319	321	325	361	362	363	368	406	407	409	413	455	456	458	462
		Lo PR	131	133	136	142	139	141	144	149	146	148	151	156	152	153	157	162	157	159	162	168	164	166	169	175

IDB: Entering Indoor Dry Bulb Temperature

High and low pressures are measured at the liquid and suction service valves.

Shaded area reflects ACCA (TVA) Rating Conditions.

kW = Total system power

Amps = Outdoor unit amps (compressor + fan)

			Outdoor Ambient Temperature																							
			65ºF				75ºF				85ºF				95ºF				105ºF				115ºF			
			Entering Indoor Wet Bulb Temperature																							
IDB	Airflow		59	63	67	71	59	63	67	71	59	63	67	71	59	63	67	71	59	63	67	71	59	63	67	71
70	525	MBh	17.7	17.9	18.4	-	17.5	17.8	18.3	-	17.0	17.3	17.8	-	16.3	16.5	17.0	-	15.3	15.5	16.1	-	14.4	14.6	15.2	-
		S/T	0.62	0.54	0.40	-	0.63	0.55	0.41	-	0.65	0.57	0.43	-	1.00	0.59	0.45	-	1.00	0.62	0.48	-	1.00	0.67	0.53	-
		ΔT	19	17	14	-	19	17	14	-	19	18	14	-	19	17	14	-	19	17	14	-	20	18	15	-
		kW	1.13	1.12	1.12	-	1.24	1.24	1.24	-	1.38	1.38	1.37	-	1.52	1.52	1.52	-	1.68	1.68	1.68	-	1.87	1.87	1.86	-
		Amps	4.3	4.3	4.3	-	4.9	4.9	4.8	-	5.5	5.5	5.4	-	6.1	6.1	6.1	-	6.9	6.8	6.8	-	7.7	7.7	7.7	-
		Hi PR	236	237	238	-	273	274	275	-	312	313	314	-	354	355	356	-	399	400	402	-	447	448	450	-
		Lo PR	125	127	130	-	133	134	137	-	139	141	144	-	145	147	150	-	151	152	155	-	157	159	162	-
	614	MBh	17.9	18.2	18.7	-	17.8	18.0	18.6	-	17.3	17.6	18.1	-	16.5	16.8	17.3	-	15.5	15.8	16.3	-	14.7	14.9	15.4	-
		S/T	0.70	0.62	0.48	-	0.70	0.62	0.48	-	0.73	0.65	0.51	-	1.00	0.67	0.53	-	1.00	0.69	0.55	-	1.00	0.75	0.61	-
		ΔT	18	16	13	-	18	16	13	-	18	16	13	-	18	16	13	-	18	16	13	-	19	17	14	-
		kW	1.13	1.13	1.13	-	1.25	1.25	1.25	-	1.38	1.38	1.38	-	1.53	1.53	1.52	-	1.69	1.69	1.68	-	1.87	1.87	1.87	-
		Amps	4.3	4.3	4.3	-	4.9	4.9	4.9	-	5.5	5.5	5.5	-	6.2	6.1	6.1	-	6.9	6.9	6.9	-	7.7	7.7	7.7	-
		Hi PR	238	239	241	-	275	276	278	-	314	315	317	-	356	357	359	-	401	402	404	-	450	451	452	-
		Lo PR	127	129	132	-	135	136	140	-	141	143	146	-	147	149	152	-	153	154	157	-	160	161	164	-
	675	MBh	18.2	18.4	18.9	-	18.0	18.2	18.8	-	17.5	17.8	18.3	-	16.7	17.0	17.5	-	15.8	16.0	16.5	-	14.9	15.1	15.7	-
		S/T	0.73	0.65	0.51	-	0.73	0.65	0.51	-	0.76	0.68	0.54	-	1.00	0.70	0.56	-	1.00	0.72	0.58	-	1.00	0.78	0.64	-
		ΔT	17	15	12	-	17	15	12	-	17	16	12	-	17	15	12	-	17	15	12	-	18	16	13	-
		kW	1.14	1.14	1.13	-	1.26	1.25	1.25	-	1.39	1.39	1.38	-	1.53	1.53	1.53	-	1.69	1.69	1.69	-	1.88	1.88	1.88	-
		Amps	4.4	4.4	4.4	-	4.9	4.9	4.9	-	5.5	5.5	5.5	-	6.2	6.2	6.2	-	6.9	6.9	6.9	-	7.8	7.8	7.7	-
		Hi PR	239	240	242	-	277	278	279	-	316	317	318	-	358	359	360	-	403	404	406	-	451	452	454	-
		Lo PR	129	130	134	-	136	138	141	-	143	145	148	-	149	150	153	-	154	156	159	-	161	163	166	-
75	525	MBh	17.7	17.9	18.5	19.3	17.5	17.8	18.3	19.1	17.1	17.3	17.8	18.6	16.3	16.5	17.0	17.8	15.3	15.5	16.1	16.9	14.4	14.7	15.2	16.0
		S/T	0.76	0.68	0.53	0.38	0.76	0.68	0.54	0.39	1.00	0.71	0.57	0.42	1.00	0.73	0.59	0.44	1.00	0.75	0.61	0.46	1.00	1.00	0.66	0.52
		ΔT	23	21	18	15	23	21	18	15	23	21	18	15	23	21	18	14	23	21	18	14	24	22	19	15
		kW	1.12	1.12	1.12	1.13	1.24	1.24	1.24	1.25	1.38	1.37	1.37	1.38	1.52	1.52	1.52	1.52	1.68	1.68	1.68	1.68	1.87	1.87	1.86	1.87
		Amps	4.3	4.3	4.3	4.3	4.9	4.8	4.8	4.9	5.5	5.5	5.4	5.5	6.1	6.1	6.1	6.1	6.8	6.8	6.8	6.9	7.7	7.7	7.7	7.7
		Hi PR	236	237	238	243	273	274	276	280	312	313	315	319	354	355	357	361	399	400	402	406	448	449	450	454
		Lo PR	125	127	130	135	133	134	137	143	139	141	144	149	145	147	150	155	151	152	155	161	158	159	162	168
	614	MBh	17.9	18.2	18.7	19.5	17.8	18.0	18.6	19.4	17.3	17.6	18.1	18.9	16.5	**16.8**	17.3	18.1	15.6	15.8	16.3	17.1	14.7	14.9	15.4	16.3
		S/T	0.83	0.75	0.61	0.46	1.00	0.76	0.62	0.47	1.00	0.79	0.64	0.49	1.00	**0.81**	0.66	0.51	1.00	0.83	0.69	0.54	1.00	1.00	0.74	0.59
		ΔT	22	20	17	13	22	20	17	13	22	20	17	14	22	**20**	17	13	21	20	16	13	23	21	17	14
		kW	1.13	1.13	1.13	1.14	1.25	1.25	1.25	1.26	1.38	1.38	1.38	1.39	1.53	**1.53**	1.52	1.53	1.69	1.69	1.68	1.69	1.87	1.87	1.87	1.88
		Amps	4.3	4.3	4.3	4.4	4.9	4.9	4.9	4.9	5.5	5.5	5.5	5.5	6.1	**6.1**	6.1	6.2	6.9	6.9	6.9	6.9	7.7	7.7	7.7	7.8
		Hi PR	238	239	241	245	275	276	278	282	314	315	317	321	356	**357**	359	363	402	403	404	408	450	451	453	457
		Lo PR	127	129	132	137	135	136	140	145	142	143	146	152	147	**149**	152	157	153	154	157	163	160	161	164	170
	675	MBh	18.2	18.4	18.9	19.7	18.0	18.3	18.8	19.6	17.5	17.8	18.3	19.1	16.7	17.0	17.5	18.3	15.8	16.0	16.6	17.4	14.9	15.1	15.7	16.5
		S/T	0.86	0.78	0.64	0.49	1.00	0.79	0.65	0.50	1.00	0.82	0.67	0.52	1.00	0.84	0.69	0.54	1.00	1.00	0.72	0.57	1.00	1.00	0.77	0.62
		ΔT	21	19	16	13	21	19	16	13	21	19	16	13	21	19	16	13	21	19	16	12	22	20	17	13
		kW	1.14	1.14	1.13	1.14	1.25	1.25	1.25	1.26	1.39	1.39	1.38	1.39	1.53	1.53	1.53	1.54	1.69	1.69	1.69	1.70	1.88	1.88	1.88	1.88
		Amps	4.4	4.4	4.4	4.4	4.9	4.9	4.9	4.9	5.5	5.5	5.5	5.5	6.2	6.2	6.2	6.2	6.9	6.9	6.9	6.9	7.8	7.8	7.7	7.8
		Hi PR	240	241	242	246	277	278	280	284	316	317	319	323	358	359	361	365	403	404	406	410	451	452	454	458
		Lo PR	129	130	134	139	136	138	141	147	143	145	148	153	149	150	153	159	154	156	159	164	161	163	166	171

IDB: Entering Indoor Dry Bulb Temperature

High and low pressures are measured at the liquid and suction service valves.

Shaded area reflects ACCA (TVA) Rating Conditions.

kW = Total system power

Amps = Outdoor unit amps (compressor + fan)

			Outdoor Ambient Temperature																							
			65ºF				75ºF				85ºF				95ºF				105ºF				115ºF			
			Entering Indoor Wet Bulb Temperature																							
IDB	Airflow		59	63	67	71	59	63	67	71	59	63	67	71	59	63	67	71	59	63	67	71	59	63	67	71
80	525	MBh	17.8	18.0	18.5	19.4	17.6	17.9	18.4	19.2	17.1	17.4	17.9	18.7	16.4	16.6	17.1	17.9	15.4	15.6	16.2	17.0	14.5	14.7	15.3	16.1
		S/T	1.00	0.81	0.67	0.52	1.00	0.81	0.67	0.52	1.00	0.84	0.70	0.55	1.00	1.00	0.72	0.57	1.00	1.00	0.74	0.59	1.00	1.00	0.80	0.65
		ΔT	27	25	22	18	27	25	22	18	27	25	22	19	27	25	22	18	27	25	22	18	28	26	23	19
		kW	1.13	1.12	1.12	1.13	1.24	1.24	1.24	1.25	1.38	1.38	1.37	1.38	1.52	1.52	1.52	1.53	1.68	1.68	1.68	1.69	1.87	1.87	1.86	1.87
		Amps	4.3	4.3	4.3	4.3	4.9	4.9	4.8	4.9	5.5	5.5	5.4	5.5	6.1	6.1	6.1	6.1	6.9	6.8	6.8	6.9	7.7	7.7	7.7	7.7
		Hi PR	236	237	239	243	273	274	276	280	312	313	315	319	354	355	357	361	400	401	402	406	448	449	451	455
		Lo PR	126	127	130	136	133	135	138	143	140	141	145	150	146	147	150	156	151	153	156	161	158	160	163	168
	614	MBh	18.0	18.3	18.8	19.6	17.9	18.1	18.7	19.5	17.4	17.7	18.2	19.0	16.6	16.9	**17.4**	18.2	15.6	15.9	16.4	17.2	14.8	15.0	15.5	16.3
		S/T	1.00	0.88	0.74	0.59	1.00	0.89	0.75	0.60	1.00	0.92	0.77	0.63	1.00	1.00	**0.80**	0.65	1.00	1.00	0.82	0.67	1.00	1.00	0.87	0.72
		ΔT	26	24	21	17	26	24	21	17	26	24	21	17	26	24	**21**	17	25	24	20	17	26	25	21	18
		kW	1.13	1.13	1.13	1.14	1.25	1.25	1.25	1.26	1.38	1.38	1.38	1.39	1.53	1.53	**1.52**	1.53	1.69	1.69	1.68	1.69	1.87	1.87	1.87	1.88
		Amps	4.3	4.3	4.3	4.4	4.9	4.9	4.9	4.9	5.5	5.5	5.5	5.5	6.2	6.1	**6.1**	6.2	6.9	6.9	6.9	6.9	7.7	7.7	7.7	7.8
		Hi PR	239	240	241	245	276	277	278	283	315	316	317	322	357	358	**359**	364	402	403	405	409	450	451	453	457
		Lo PR	128	129	133	138	135	137	140	145	142	144	147	152	148	149	**152**	158	153	155	158	163	160	162	165	170
	675	MBh	18.3	18.5	19.0	19.8	18.1	18.3	18.9	19.7	17.6	17.9	18.4	19.2	16.8	17.1	17.6	18.4	15.9	16.1	16.6	17.5	15.0	15.2	15.8	16.6
		S/T	1.00	0.91	0.77	0.62	1.00	0.92	0.78	0.63	1.00	0.95	0.80	0.66	1.00	1.00	0.83	0.68	1.00	1.00	0.85	0.70	1.00	1.00	0.90	0.75
		ΔT	25	23	20	16	25	23	20	16	25	23	20	17	25	23	20	16	25	23	20	16	26	24	21	17
		kW	1.14	1.14	1.13	1.14	1.26	1.25	1.25	1.26	1.39	1.39	1.38	1.39	1.53	1.53	1.53	1.54	1.69	1.69	1.69	1.70	1.88	1.88	1.88	1.88
		Amps	4.4	4.4	4.4	4.4	4.9	4.9	4.9	4.9	5.5	5.5	5.5	5.5	6.2	6.2	6.2	6.2	6.9	6.9	6.9	6.9	7.8	7.8	7.7	7.8
		Hi PR	240	241	243	247	277	278	280	284	316	317	319	323	358	359	361	365	404	405	406	410	452	453	455	459
		Lo PR	129	131	134	139	137	139	142	147	144	145	148	154	149	151	154	159	155	156	160	165	162	163	167	172
85	525	MBh	18.1	18.3	18.8	19.7	17.9	18.2	18.7	19.5	17.4	17.7	18.2	19.0	16.7	16.9	17.4	18.2	15.7	15.9	16.5	17.3	14.8	15.0	15.6	16.4
		S/T	1.00	0.91	0.77	0.62	1.00	1.00	0.78	0.63	1.00	1.00	0.80	0.66	1.00	1.00	0.83	0.68	1.00	1.00	0.85	0.70	1.00	1.00	1.00	0.75
		ΔT	30	29	25	22	30	28	25	22	30	29	25	22	30	28	25	22	30	28	25	22	31	29	26	23
		kW	1.13	1.13	1.12	1.13	1.25	1.25	1.24	1.25	1.38	1.38	1.38	1.38	1.52	1.52	1.52	1.53	1.68	1.68	1.68	1.69	1.87	1.87	1.87	1.88
		Amps	4.3	4.3	4.3	4.4	4.9	4.9	4.9	4.9	5.5	5.5	5.5	5.5	6.1	6.1	6.1	6.2	6.9	6.9	6.8	6.9	7.7	7.7	7.7	7.7
		Hi PR	237	238	240	244	275	276	277	281	314	315	316	320	356	357	358	362	401	402	403	408	449	450	452	456
		Lo PR	128	129	132	138	135	137	140	145	142	143	147	152	147	149	152	158	153	155	158	163	160	161	165	170
	614	MBh	18.3	18.6	19.1	19.9	18.2	18.4	19.0	19.8	17.7	18.0	18.5	19.3	16.9	17.2	17.7	18.5	15.9	16.2	16.7	17.5	15.1	15.3	15.8	16.6
		S/T	1.00	0.99	0.85	0.70	1.00	1.00	0.85	0.71	1.00	1.00	0.88	0.73	1.00	1.00	0.90	0.75	1.00	1.00	1.00	0.77	1.00	1.00	1.00	0.83
		ΔT	29	27	24	21	29	27	24	21	29	27	24	21	29	27	24	21	29	27	24	20	30	28	25	21
		kW	1.13	1.13	1.13	1.14	1.25	1.25	1.25	1.26	1.39	1.38	1.38	1.39	1.53	1.53	1.53	1.54	1.69	1.69	1.69	1.70	1.88	1.88	1.87	1.88
		Amps	4.4	4.4	4.3	4.4	4.9	4.9	4.9	4.9	5.5	5.5	5.5	5.5	6.2	6.2	6.1	6.2	6.9	6.9	6.9	6.9	7.8	7.7	7.7	7.8
		Hi PR	240	241	242	246	277	278	280	284	316	317	319	323	358	359	361	365	403	404	406	410	451	452	454	458
		Lo PR	130	131	134	140	137	139	142	147	144	145	149	154	150	151	154	160	155	157	160	165	162	164	167	172
	675	MBh	18.6	18.8	19.3	20.1	18.4	18.6	19.2	20.0	17.9	18.2	18.7	19.5	17.1	17.4	17.9	18.7	16.2	16.4	16.9	17.8	15.3	15.5	16.1	16.9
		S/T	1.00	1.00	0.88	0.73	1.00	1.00	0.88	0.74	1.00	1.00	0.91	0.76	1.00	1.00	0.93	0.78	1.00	1.00	1.00	0.80	1.00	1.00	1.00	0.86
		ΔT	28	27	23	20	28	27	23	20	29	27	23	20	28	26	23	20	28	26	23	20	29	27	24	21
		kW	1.14	1.14	1.14	1.15	1.26	1.26	1.25	1.26	1.39	1.39	1.39	1.40	1.53	1.53	1.53	1.54	1.69	1.69	1.69	1.70	1.88	1.88	1.88	1.89
		Amps	4.4	4.4	4.4	4.4	4.9	4.9	4.9	4.9	5.5	5.5	5.5	5.6	6.2	6.2	6.2	6.2	6.9	6.9	6.9	6.9	7.8	7.8	7.8	7.8
		Hi PR	241	242	244	248	278	279	281	285	317	318	320	324	359	360	362	366	405	406	407	411	453	454	456	460
		Lo PR	131	133	136	141	139	140	144	149	146	147	150	156	151	153	156	161	157	158	161	167	164	165	168	174

IDB: Entering Indoor Dry Bulb Temperature

High and low pressures are measured at the liquid and suction service valves.

Shaded area reflects AHRI Rating Conditions.

kW = Total system power

Amps = Outdoor unit amps (compressor + fan)

			OUTDOOR AMBIENT TEMPERATURE																							
			65ºF				75ºF				85ºF				95ºF				105ºF				115ºF			
			ENTERING INDOOR WET BULB TEMPERATURE																							
IDB	AIRFLOW		59	63	67	71	59	63	67	71	59	63	67	71	59	63	67	71	59	63	67	71	59	63	67	71
70	700	MBh	23.7	24.0	24.7	-	23.4	23.8	24.5	-	22.8	23.2	23.9	-	21.7	22.1	22.8	-	20.4	20.8	21.5	-	19.2	19.6	20.3	-
		S/T	0.59	0.51	0.37	-	0.60	0.52	0.37	-	0.62	0.54	0.40	-	0.65	0.56	0.42	-	1.00	0.59	0.44	-	1.00	0.64	0.50	-
		ΔT	19	17	14	-	19	17	14	-	19	17	14	-	19	17	14	-	19	17	14	-	20	18	15	-
		kW	1.41	1.40	1.40	-	1.57	1.57	1.57	-	1.76	1.76	1.75	-	1.96	1.96	1.95	-	2.18	2.18	2.18	-	2.44	2.44	2.44	-
		Amps	5.2	5.2	5.2	-	6.0	5.9	5.9	-	6.8	6.8	6.8	-	7.7	7.7	7.7	-	8.7	8.7	8.7	-	9.9	9.9	9.9	-
		HI PR	249	250	252	-	288	290	291	-	330	331	333	-	374	375	377	-	422	423	425	-	474	475	476	-
		LO PR	123	124	128	-	130	132	135	-	137	139	142	-	143	144	147	-	148	150	153	-	155	157	160	-
	800	MBh	23.9	24.2	25.0	-	23.7	24.0	24.7	-	23.1	23.4	24.1	-	22.0	22.3	23.1	-	20.7	21.0	21.7	-	19.5	19.8	20.6	-
		S/T	0.67	0.59	0.44	-	0.67	0.59	0.45	-	0.70	0.62	0.48	-	1.00	0.64	0.50	-	1.00	0.66	0.52	-	1.00	0.72	0.58	-
		ΔT	18	16	13	-	18	16	13	-	18	16	13	-	18	16	13	-	18	16	13	-	19	17	14	-
		kW	1.41	1.41	1.41	-	1.58	1.58	1.58	-	1.77	1.76	1.76	-	1.97	1.96	1.96	-	2.19	2.19	2.19	-	2.45	2.45	2.45	-
		Amps	5.2	5.2	5.2	-	6.0	6.0	6.0	-	6.8	6.8	6.8	-	7.8	7.8	7.7	-	8.8	8.8	8.8	-	10.0	10.0	10.0	-
		HI PR	251	252	254	-	290	292	293	-	332	333	335	-	376	377	379	-	424	426	427	-	476	477	479	-
		LO PR	125	126	129	-	132	134	137	-	139	140	143	-	144	146	149	-	150	151	154	-	157	158	161	-
	870	MBh	24.1	24.5	25.2	-	23.9	24.2	25.0	-	23.3	23.6	24.3	-	22.2	22.6	23.3	-	20.9	21.2	22.0	-	19.7	20.1	20.8	-
		S/T	0.71	0.62	0.48	-	0.71	0.63	0.49	-	0.74	0.66	0.51	-	1.00	0.68	0.53	-	1.00	0.70	0.56	-	1.00	0.76	0.61	-
		ΔT	17	16	12	-	17	15	12	-	17	16	13	-	17	15	12	-	17	15	12	-	18	16	13	-
		kW	1.42	1.42	1.42	-	1.59	1.58	1.58	-	1.77	1.77	1.77	-	1.97	1.97	1.97	-	2.20	2.19	2.19	-	2.46	2.46	2.45	-
		Amps	5.3	5.3	5.2	-	6.0	6.0	6.0	-	6.9	6.9	6.8	-	7.8	7.8	7.8	-	8.8	8.8	8.8	-	10.0	10.0	10.0	-
		HI PR	252	253	255	-	292	293	295	-	333	334	336	-	378	379	381	-	426	427	429	-	477	478	480	-
		LO PR	126	127	130	-	133	135	138	-	140	141	145	-	145	147	150	-	151	152	156	-	158	159	163	-
75	700	MBh	23.7	24.0	24.7	25.8	23.5	23.8	24.5	25.6	22.8	23.2	23.9	25.0	21.8	**22.1**	22.8	23.9	20.5	20.8	21.5	22.6	19.3	19.6	20.3	21.4
		S/T	0.73	0.65	0.50	0.35	0.73	0.65	0.51	0.36	1.00	0.68	0.54	0.39	1.00	**0.70**	0.56	0.41	1.00	0.72	0.58	0.43	1.00	1.00	0.64	0.48
		ΔT	23	21	18	15	23	21	18	14	23	21	18	15	23	**21**	18	14	22	21	17	14	23	22	19	15
		kW	1.40	1.40	1.40	1.41	1.57	1.57	1.57	1.58	1.76	1.75	1.75	1.76	1.96	**1.95**	1.95	1.96	2.18	2.18	2.18	2.19	2.44	2.44	2.44	2.45
		Amps	5.2	5.2	5.2	5.2	5.9	5.9	5.9	6.0	6.8	6.8	6.8	6.8	7.7	**7.7**	7.7	7.8	8.7	8.7	8.7	8.8	9.9	9.9	9.9	10.0
		HI PR	249	250	252	256	289	290	291	296	330	331	333	337	375	**376**	377	382	423	424	425	430	474	475	477	481
		LO PR	123	125	128	133	131	132	135	140	137	139	142	147	143	**144**	147	153	148	150	153	158	155	157	160	165
	800	MBh	23.9	24.3	25.0	26.1	23.7	24.0	24.8	25.8	23.1	23.4	24.1	25.2	22.0	**22.4**	23.1	24.2	20.7	21.1	21.8	22.8	19.5	19.9	20.6	21.7
		S/T	0.80	0.72	0.58	0.43	0.81	0.73	0.59	0.44	1.00	0.76	0.61	0.46	1.00	**0.78**	0.63	0.48	1.00	0.80	0.66	0.51	1.00	1.00	0.71	0.56
		ΔT	22	20	17	13	21	20	17	13	22	20	17	14	21	**20**	17	13	21	20	16	13	22	21	17	14
		kW	1.41	1.41	1.41	1.42	1.58	1.58	1.58	1.59	1.76	1.76	1.76	1.77	1.96	**1.96**	1.96	1.97	2.19	2.19	2.18	2.20	2.45	2.45	2.45	2.46
		Amps	5.2	5.2	5.2	5.3	6.0	6.0	6.0	6.0	6.8	6.8	6.8	6.9	7.8	**7.7**	7.7	7.8	8.8	8.8	8.8	8.8	10.0	10.0	10.0	10.0
		HI PR	251	252	254	258	291	292	294	298	332	333	335	339	377	**378**	379	384	425	426	427	432	476	477	479	483
		LO PR	125	126	129	135	132	134	137	142	139	140	143	149	144	**146**	149	154	150	151	154	160	157	158	161	167
	870	MBh	24.1	24.5	25.2	26.3	23.9	24.3	25.0	26.1	23.3	23.6	24.3	25.4	22.2	**22.6**	23.3	24.4	20.9	21.3	22.0	23.1	19.7	20.1	20.8	21.9
		S/T	0.84	0.76	0.62	0.47	1.00	0.77	0.62	0.47	1.00	0.79	0.65	0.50	1.00	**0.82**	0.67	0.52	1.00	0.84	0.69	0.54	1.00	1.00	0.75	0.60
		ΔT	21	19	16	13	21	19	16	13	21	19	16	13	21	**19**	16	13	21	19	16	13	22	20	17	14
		kW	1.42	1.42	1.41	1.43	1.58	1.58	1.58	1.59	1.77	1.77	1.77	1.78	1.97	**1.97**	1.97	1.98	2.19	2.19	2.19	2.20	2.46	2.46	2.45	2.47
		Amps	5.3	5.2	5.2	5.3	6.0	6.0	6.0	6.1	6.9	6.9	6.8	6.9	7.8	**7.8**	7.8	7.8	8.8	8.8	8.8	8.8	10.0	10.0	10.0	10.0
		HI PR	253	254	255	260	292	293	295	299	333	335	336	341	378	**379**	381	385	426	427	429	433	477	478	480	484
		LO PR	126	127	130	136	133	135	138	143	140	141	145	150	146	**147**	150	155	151	153	156	161	158	159	163	168

IDB: Entering Indoor Dry Bulb Temperature

High and low pressures are measured at the liquid and suction service valves.

Shaded area reflects ACCA (TVA) Rating Conditions.

kW = Total system power

Amps = Outdoor unit amps (compressor + fan)

			Outdoor Ambient Temperature																							
			65ºF				75ºF				85ºF				95ºF				105ºF				115ºF			
			Entering Indoor Wet Bulb Temperature																							
IDB	Airflow		59	63	67	71	59	63	67	71	59	63	67	71	59	63	67	71	59	63	67	71	59	63	67	71
80	700	MBh	23.8	24.1	24.8	25.9	23.6	23.9	24.6	25.7	23.0	23.3	24.0	25.1	21.9	22.2	22.9	24.0	20.6	20.9	21.6	22.7	19.4	19.7	20.4	21.5
		S/T	1.00	0.78	0.64	0.49	1.00	0.79	0.64	0.49	1.00	0.81	0.67	0.52	1.00	0.83	0.69	0.54	1.00	1.00	0.71	0.56	1.00	1.00	0.77	0.62
		ΔT	26	25	22	18	26	25	21	18	27	25	22	18	26	25	21	18	26	24	21	18	27	25	22	19
		kW	1.41	1.40	1.40	1.41	1.57	1.57	1.57	1.58	1.76	1.76	1.75	1.76	1.96	1.96	1.95	1.97	2.18	2.18	2.18	2.19	2.44	2.44	2.44	2.45
		Amps	5.2	5.2	5.2	5.2	6.0	5.9	5.9	6.0	6.8	6.8	6.8	6.8	7.7	7.7	7.7	7.8	8.7	8.7	8.7	8.8	9.9	9.9	9.9	10.0
		HI PR	250	251	252	257	289	290	292	296	330	332	333	338	375	376	378	382	423	424	426	430	474	475	477	482
		LO PR	124	125	128	133	131	133	136	141	138	139	142	148	143	145	148	153	149	150	153	159	156	157	160	166
	800	MBh	24.0	24.4	25.1	26.2	23.8	24.2	24.9	26.0	23.2	23.6	24.3	25.3	22.1	22.5	23.2	24.3	20.8	21.2	21.9	23.0	19.6	20.0	20.7	21.8
		S/T	1.00	0.86	0.71	0.56	1.00	0.86	0.72	0.57	1.00	0.89	0.75	0.59	1.00	1.00	0.77	0.62	1.00	1.00	0.79	0.64	1.00	1.00	0.84	0.69
		ΔT	25	24	20	17	25	24	20	17	25	24	21	17	25	24	20	17	25	23	20	17	26	24	21	18
		kW	1.41	1.41	1.41	1.42	1.58	1.58	1.58	1.59	1.77	1.76	1.76	1.77	1.97	1.96	1.96	1.97	2.19	2.19	2.19	2.20	2.45	2.45	2.45	2.46
		Amps	5.2	5.2	5.2	5.3	6.0	6.0	6.0	6.0	6.8	6.8	6.8	6.9	7.8	7.8	7.7	7.8	8.8	8.8	8.8	8.8	10.0	10.0	10.0	10.0
		HI PR	252	253	255	259	291	292	294	298	333	334	335	340	377	378	380	384	425	426	428	432	476	477	479	484
		LO PR	125	127	130	135	133	134	137	143	139	141	144	149	145	146	150	155	150	152	155	160	157	159	162	167
	870	MBh	24.3	24.6	25.3	26.4	24.0	24.4	25.1	26.2	23.4	23.8	24.5	25.6	22.4	22.7	**23.4**	24.5	21.0	21.4	22.1	23.2	19.9	20.2	20.9	22.0
		S/T	1.00	0.89	0.75	0.60	1.00	0.90	0.76	0.61	1.00	0.93	0.78	0.63	1.00	1.00	**0.80**	0.65	1.00	1.00	0.83	0.68	1.00	1.00	0.88	0.73
		ΔT	25	23	20	17	25	23	20	17	25	23	20	17	25	23	**20**	16	24	23	20	16	25	24	21	17
		kW	1.42	1.42	1.42	1.43	1.59	1.58	1.58	1.59	1.77	1.77	1.77	1.78	1.97	1.97	**1.97**	1.98	2.19	2.19	2.19	2.20	2.46	2.46	2.45	2.47
		Amps	5.3	5.3	5.2	5.3	6.0	6.0	6.0	6.1	6.9	6.9	6.8	6.9	7.8	7.8	**7.8**	7.8	8.8	8.8	8.8	8.8	10.0	10.0	10.0	10.0
		HI PR	253	254	256	260	293	294	295	300	334	335	337	341	378	380	**381**	386	426	428	429	434	478	479	481	485
		LO PR	126	128	131	136	134	135	139	144	140	142	145	150	146	148	**151**	156	152	153	156	161	158	160	163	168
85	700	MBh	24.2	24.5	25.2	26.3	24.0	24.3	25.0	26.1	23.4	23.7	24.4	25.5	22.3	22.6	23.3	24.4	21.0	21.3	22.0	23.1	19.8	20.1	20.8	21.9
		S/T	1.00	0.89	0.74	0.59	1.00	0.89	0.75	0.60	1.00	1.00	0.78	0.63	1.00	1.00	0.80	0.65	1.00	1.00	0.82	0.67	1.00	1.00	1.00	0.72
		ΔT	30	28	25	22	30	28	25	22	30	28	25	22	30	28	25	21	29	28	25	21	30	29	26	22
		kW	1.41	1.41	1.40	1.42	1.57	1.57	1.57	1.58	1.76	1.76	1.76	1.77	1.96	1.96	1.96	1.97	2.18	2.18	2.18	2.19	2.45	2.45	2.44	2.45
		Amps	5.2	5.2	5.2	5.2	6.0	6.0	5.9	6.0	6.8	6.8	6.8	6.9	7.7	7.7	7.7	7.8	8.8	8.7	8.7	8.8	10.0	10.0	9.9	10.0
		HI PR	251	252	254	258	290	291	293	297	332	333	334	339	376	377	379	383	424	425	427	431	475	477	478	483
		LO PR	125	127	130	135	133	134	138	143	140	141	144	149	145	147	150	155	151	152	155	161	157	159	162	167
	800	MBh	24.5	24.8	25.5	26.6	24.2	24.6	25.3	26.4	23.6	24.0	24.7	25.7	22.5	22.9	23.6	24.7	21.2	21.6	22.3	23.4	20.0	20.4	21.1	22.2
		S/T	1.00	0.96	0.82	0.67	1.00	1.00	0.83	0.68	1.00	1.00	0.85	0.70	1.00	1.00	0.87	0.72	1.00	1.00	0.90	0.75	1.00	1.00	1.00	0.80
		ΔT	29	27	24	20	29	27	24	20	29	27	24	21	29	27	24	20	28	27	23	20	29	28	25	21
		kW	1.42	1.42	1.41	1.43	1.58	1.58	1.58	1.59	1.77	1.77	1.76	1.78	1.97	1.97	1.96	1.98	2.19	2.19	2.19	2.20	2.46	2.45	2.45	2.46
		Amps	5.2	5.2	5.2	5.3	6.0	6.0	6.0	6.0	6.9	6.8	6.8	6.9	7.8	7.8	7.8	7.8	8.8	8.8	8.8	8.8	10.0	10.0	10.0	10.0
		HI PR	253	254	256	260	292	293	295	300	334	335	337	341	378	379	381	385	426	427	429	433	478	479	480	485
		LO PR	127	129	132	137	135	136	139	144	141	143	146	151	147	148	151	157	152	154	157	162	159	161	164	169
	870	MBh	24.7	25.0	25.7	26.8	24.4	24.8	25.5	26.6	23.8	24.2	24.9	26.0	22.8	23.1	23.8	24.9	21.4	21.8	22.5	23.6	20.3	20.6	21.3	22.4
		S/T	1.00	1.00	0.86	0.71	1.00	1.00	0.86	0.71	1.00	1.00	0.89	0.74	1.00	1.00	0.91	0.76	1.00	1.00	0.93	0.78	1.00	1.00	1.00	0.84
		ΔT	28	26	23	20	28	26	23	20	28	26	23	20	28	26	23	20	28	26	23	20	29	27	24	21
		kW	1.42	1.42	1.42	1.43	1.59	1.59	1.58	1.60	1.77	1.77	1.77	1.78	1.97	1.97	1.97	1.98	2.20	2.20	2.19	2.21	2.46	2.46	2.46	2.47
		Amps	5.3	5.3	5.3	5.3	6.0	6.0	6.0	6.1	6.9	6.9	6.9	6.9	7.8	7.8	7.8	7.8	8.8	8.8	8.8	8.9	10.0	10.0	10.0	10.1
		HI PR	254	255	257	261	294	295	297	301	335	336	338	342	380	381	382	387	428	429	430	435	479	480	482	486
		LO PR	128	130	133	138	136	137	140	146	142	144	147	152	148	149	153	158	153	155	158	163	160	162	165	170

IDB: Entering Indoor Dry Bulb Temperature

Shaded area reflects AHRI Rating Conditions.

kW = Total system power

High and low pressures are measured at the liquid and suction service valves.

Amps = Outdoor unit amps (compressor + fan)

Expanded Cooling Data — GSZ140241L* + ARUF25B14** + TXV

			Outdoor Ambient Temperature																							
			65ºF				75ºF				85ºF				95ºF				105ºF				115ºF			
			Entering Indoor Wet Bulb Temperature																							
IDB	Airflow		59	63	67	71	59	63	67	71	59	63	67	71	59	63	67	71	59	63	67	71	59	63	67	71
70	700	MBh	23.3	23.6	24.3	-	23.1	23.4	24.1	-	22.4	22.8	23.5	-	21.4	21.7	22.4	-	20.1	20.4	21.1	-	18.9	19.3	20.0	-
		S/T	0.60	0.52	0.38	-	0.61	0.53	0.38	-	0.64	0.56	0.41	-	1.00	0.58	0.43	-	1.00	0.60	0.46	-	1.00	0.65	0.51	-
		ΔT	19	17	14	-	19	17	14	-	19	18	14	-	19	17	14	-	19	17	14	-	20	18	15	-
		kW	1.47	1.47	1.46	-	1.63	1.63	1.62	-	1.81	1.81	1.81	-	2.01	2.00	2.00	-	2.22	2.22	2.22	-	2.48	2.48	2.48	-
		Amps	5.3	5.3	5.3	-	6.0	6.0	6.0	-	6.8	6.8	6.8	-	7.7	7.7	7.7	-	8.7	8.7	8.7	-	9.9	9.9	9.9	-
		HI PR	243	244	246	-	282	283	285	-	322	323	325	-	366	367	368	-	412	414	415	-	463	464	465	-
		LO PR	124	126	129	-	132	133	137	-	139	140	143	-	144	146	149	-	150	151	155	-	157	158	161	-
	800	MBh	23.5	23.9	24.6	-	23.3	23.6	24.3	-	22.7	23.0	23.7	-	21.7	22.0	22.7	-	20.4	20.7	21.4	-	19.2	19.5	20.2	-
		S/T	0.68	0.60	0.45	-	0.69	0.60	0.46	-	0.71	0.63	0.49	-	1.00	0.65	0.51	-	1.00	0.68	0.53	-	1.00	0.73	0.59	-
		ΔT	18	16	13	-	18	16	13	-	18	16	13	-	18	16	13	-	18	16	13	-	19	17	14	-
		kW	1.48	1.47	1.47	-	1.64	1.64	1.63	-	1.82	1.82	1.81	-	2.01	2.01	2.01	-	2.23	2.23	2.23	-	2.49	2.49	2.49	-
		Amps	5.3	5.3	5.3	-	6.1	6.1	6.0	-	6.9	6.9	6.9	-	7.8	7.8	7.8	-	8.8	8.8	8.8	-	10.0	10.0	9.9	-
		HI PR	245	246	248	-	284	285	287	-	324	325	327	-	368	369	370	-	415	416	417	-	465	466	467	-
		LO PR	126	128	131	-	134	135	138	-	140	142	145	-	146	147	151	-	151	153	156	-	158	160	163	-
	870	MBh	23.7	24.0	24.7	-	23.5	23.8	24.5	-	22.9	23.2	23.9	-	21.8	22.2	22.9	-	20.6	20.9	21.6	-	19.4	19.7	20.4	-
		S/T	0.71	0.63	0.48	-	0.72	0.64	0.49	-	0.74	0.66	0.52	-	1.00	0.68	0.54	-	1.00	0.71	0.56	-	1.00	0.76	0.62	-
		ΔT	17	16	13	-	17	16	12	-	18	16	13	-	17	16	12	-	17	15	12	-	18	16	13	-
		kW	1.48	1.48	1.48	-	1.64	1.64	1.64	-	1.82	1.82	1.82	-	2.02	2.02	2.01	-	2.24	2.24	2.23	-	2.49	2.49	2.49	-
		Amps	5.3	5.3	5.3	-	6.1	6.1	6.1	-	6.9	6.9	6.9	-	7.8	7.8	7.8	-	8.8	8.8	8.8	-	10.0	10.0	10.0	-
		HI PR	246	247	249	-	285	286	288	-	325	326	328	-	369	370	372	-	416	417	418	-	466	467	468	-
		LO PR	127	129	132	-	135	136	139	-	141	143	146	-	147	148	152	-	152	154	157	-	159	161	164	-
75	700	MBh	23.3	23.6	24.3	25.4	23.1	23.4	24.1	25.2	22.5	22.8	23.5	24.6	21.4	**21.7**	22.4	23.5	20.1	20.5	21.2	22.2	19.0	19.3	20.0	21.0
		S/T	0.74	0.66	0.51	0.36	0.75	0.67	0.52	0.37	1.00	0.69	0.55	0.40	1.00	**0.71**	0.57	0.42	1.00	0.74	0.59	0.44	1.00	1.00	0.65	0.50
		ΔT	23	21	18	15	23	21	18	15	23	21	18	15	23	**21**	18	15	22	21	18	14	24	22	19	15
		kW	1.47	1.46	1.46	1.47	1.63	1.63	1.62	1.64	1.81	1.81	1.80	1.82	2.00	**2.00**	2.00	2.01	2.22	2.22	2.22	2.23	2.48	2.48	2.48	2.49
		Amps	5.3	5.3	5.3	5.3	6.0	6.0	6.0	6.1	6.8	6.8	6.8	6.9	7.7	**7.7**	7.7	7.8	8.7	8.7	8.7	8.8	9.9	9.9	9.9	10.0
		HI PR	243	244	246	250	282	283	285	289	322	323	325	329	366	**367**	369	373	413	414	415	420	463	464	466	470
		LO PR	124	126	129	134	132	134	137	142	139	140	143	149	144	**146**	149	154	150	151	155	160	157	158	161	167
	800	MBh	23.5	23.9	24.6	25.6	23.3	23.7	24.4	25.4	22.7	23.1	23.8	24.8	21.7	**22.0**	22.7	23.8	20.4	20.7	21.4	22.5	19.2	19.5	20.2	21.3
		S/T	0.82	0.74	0.59	0.44	1.00	0.74	0.60	0.44	1.00	0.77	0.62	0.47	1.00	**0.79**	0.64	0.49	1.00	0.81	0.67	0.52	1.00	1.00	0.72	0.57
		ΔT	22	20	17	14	22	20	17	13	22	20	17	14	22	**20**	17	13	21	20	17	13	22	21	18	14
		kW	1.47	1.47	1.47	1.48	1.64	1.64	1.63	1.65	1.82	1.82	1.81	1.83	2.01	**2.01**	2.01	2.02	2.23	2.23	2.23	2.24	2.49	2.49	2.48	2.50
		Amps	5.3	5.3	5.3	5.4	6.1	6.0	6.0	6.1	6.9	6.9	6.9	6.9	7.8	**7.8**	7.8	7.8	8.8	8.8	8.8	8.8	10.0	9.9	9.9	10.0
		HI PR	245	246	248	252	284	285	287	291	324	325	327	331	368	**369**	371	375	415	416	418	422	465	466	468	472
		LO PR	126	128	131	136	134	135	138	144	140	142	145	150	146	**147**	151	156	151	153	156	162	158	160	163	168
	870	MBh	23.7	24.1	24.8	25.8	23.5	23.8	24.5	25.6	22.9	23.2	23.9	25.0	21.8	**22.2**	22.9	23.9	20.6	20.9	21.6	22.7	19.4	19.7	20.4	21.5
		S/T	0.85	0.77	0.62	0.47	1.00	0.77	0.63	0.48	1.00	0.80	0.66	0.50	1.00	**0.82**	0.68	0.52	1.00	0.84	0.70	0.55	1.00	1.00	0.75	0.60
		ΔT	21	19	16	13	21	19	16	13	21	20	16	13	21	**19**	16	13	21	19	16	13	22	20	17	14
		kW	1.48	1.48	1.48	1.49	1.64	1.64	1.64	1.65	1.82	1.82	1.82	1.83	2.02	**2.02**	2.01	2.03	2.24	2.24	2.23	2.24	2.49	2.49	2.49	2.50
		Amps	5.3	5.3	5.3	5.4	6.1	6.1	6.1	6.1	6.9	6.9	6.9	6.9	7.8	**7.8**	7.8	7.8	8.8	8.8	8.8	8.8	10.0	10.0	10.0	10.0
		HI PR	247	248	249	254	285	286	288	292	326	327	328	333	369	**370**	372	376	416	417	419	423	466	467	469	473
		LO PR	127	129	132	137	135	136	139	145	141	143	146	151	147	**149**	152	157	153	154	157	163	159	161	164	170

IDB: Entering Indoor Dry Bulb Temperature

High and low pressures are measured at the liquid and suction service valves.

Shaded area reflects ACCA (TVA) Rating Conditions.

kW = Total system power

Amps = Outdoor unit amps (compressor + fan)

			Outdoor Ambient Temperature																							
			65ºF				75ºF				85ºF				95ºF				105ºF				115ºF			
			Entering Indoor Wet Bulb Temperature																							
IDB	Airflow		59	63	67	71	59	63	67	71	59	63	67	71	59	63	67	71	59	63	67	71	59	63	67	71
80	700	MBh	23.4	23.7	24.4	25.5	23.2	23.5	24.2	25.3	22.6	22.9	23.6	24.7	21.5	21.9	22.6	23.6	20.2	20.6	21.3	22.3	19.1	19.4	20.1	21.2
		S/T	1.00	0.79	0.65	0.50	1.00	0.80	0.66	0.50	1.00	0.83	0.68	0.53	1.00	1.00	0.70	0.55	1.00	1.00	0.73	0.57	1.00	1.00	0.78	0.63
		ΔT	27	25	22	18	26	25	22	18	27	25	22	19	26	25	22	18	26	25	21	18	27	26	22	19
		kW	1.47	1.47	1.46	1.48	1.63	1.63	1.62	1.64	1.81	1.81	1.81	1.82	2.01	2.00	2.00	2.01	2.22	2.22	2.22	2.23	2.48	2.48	2.48	2.49
		Amps	5.3	5.3	5.3	5.3	6.0	6.0	6.0	6.1	6.8	6.8	6.8	6.9	7.7	7.7	7.7	7.8	8.7	8.7	8.7	8.8	9.9	9.9	9.9	10.0
		HI PR	244	245	247	251	282	283	285	289	323	324	326	330	366	367	369	373	413	414	416	420	463	464	466	470
		LO PR	125	126	130	135	133	134	137	143	139	141	144	149	145	146	150	155	150	152	155	160	157	159	162	167
	800	MBh	23.7	24.0	24.7	25.8	23.5	23.8	24.5	25.6	22.8	23.2	23.9	24.9	21.8	22.1	22.8	23.9	20.5	20.8	21.5	22.6	19.3	19.7	20.4	21.4
		S/T	1.00	0.87	0.72	0.57	1.00	0.88	0.73	0.58	1.00	0.90	0.76	0.61	1.00	1.00	0.78	0.63	1.00	1.00	0.80	0.65	1.00	1.00	0.86	0.70
		ΔT	25	24	21	17	25	24	21	17	26	24	21	17	25	24	21	17	25	23	20	17	26	25	21	18
		kW	1.48	1.47	1.47	1.48	1.64	1.64	1.63	1.65	1.82	1.82	1.81	1.83	2.01	2.01	2.01	2.02	2.23	2.23	2.23	2.24	2.49	2.49	2.49	2.50
		Amps	5.3	5.3	5.3	5.4	6.1	6.1	6.0	6.1	6.9	6.9	6.9	6.9	7.8	7.8	7.8	7.8	8.8	8.8	8.8	8.8	10.0	10.0	9.9	10.0
		HI PR	246	247	249	253	284	285	287	291	325	326	328	332	368	369	371	375	415	416	418	422	465	466	468	472
		LO PR	127	128	131	137	134	136	139	144	141	142	146	151	146	148	151	157	152	154	157	162	159	160	164	169
	870	MBh	23.8	24.2	24.9	25.9	23.6	24.0	24.7	25.7	23.0	23.4	24.1	25.1	22.0	22.3	**23.0**	24.1	20.7	21.0	21.7	22.8	19.5	19.8	20.5	21.6
		S/T	1.00	0.90	0.76	0.60	1.00	0.91	0.76	0.61	1.00	0.93	0.79	0.64	1.00	1.00	**0.81**	0.66	1.00	1.00	0.83	0.68	1.00	1.00	0.89	0.74
		ΔT	25	23	20	17	25	23	20	17	25	23	20	17	25	23	**20**	17	25	23	20	16	26	24	21	18
		kW	1.48	1.48	1.48	1.49	1.64	1.64	1.64	1.65	1.82	1.82	1.82	1.83	2.02	2.02	**2.01**	2.03	2.24	2.24	2.23	2.25	2.49	2.49	2.49	2.50
		Amps	5.3	5.3	5.3	5.4	6.1	6.1	6.1	6.1	6.9	6.9	6.9	6.9	7.8	7.8	**7.8**	7.8	8.8	8.8	8.8	8.8	10.0	10.0	10.0	10.0
		HI PR	247	248	250	254	286	287	288	293	326	327	329	333	369	371	**372**	376	416	417	419	423	466	467	469	473
		LO PR	128	129	132	138	135	137	140	145	142	143	147	152	148	149	**152**	158	153	155	158	163	160	162	165	170
85	700	MBh	23.8	24.1	24.8	25.9	23.6	23.9	24.6	25.7	23.0	23.3	24.0	25.1	21.9	22.3	23.0	24.0	20.6	21.0	21.7	22.7	19.5	19.8	20.5	21.6
		S/T	1.00	0.90	0.76	0.60	1.00	1.00	0.76	0.61	1.00	1.00	0.79	0.64	1.00	1.00	0.81	0.66	1.00	1.00	0.83	0.68	1.00	1.00	1.00	0.74
		ΔT	30	28	25	22	30	28	25	22	30	28	25	22	30	28	25	22	30	28	25	21	31	29	26	22
		kW	1.47	1.47	1.47	1.48	1.63	1.63	1.63	1.64	1.81	1.81	1.81	1.82	2.01	2.01	2.00	2.02	2.23	2.23	2.22	2.24	2.48	2.48	2.48	2.49
		Amps	5.3	5.3	5.3	5.3	6.0	6.0	6.0	6.1	6.9	6.9	6.8	6.9	7.8	7.7	7.7	7.8	8.8	8.8	8.7	8.8	9.9	9.9	9.9	10.0
		HI PR	245	246	248	252	284	285	286	291	324	325	327	331	367	368	370	374	414	415	417	421	464	465	467	471
		LO PR	127	128	132	137	134	136	139	144	141	143	146	151	147	148	151	157	152	154	157	162	159	161	164	169
	800	MBh	24.1	24.4	25.1	26.2	23.8	24.2	24.9	25.9	23.2	23.6	24.3	25.3	22.2	22.5	23.2	24.3	20.9	21.2	21.9	23.0	19.7	20.1	20.8	21.8
		S/T	1.00	0.98	0.83	0.68	1.00	1.00	0.84	0.69	1.00	1.00	0.87	0.71	1.00	1.00	0.89	0.73	1.00	1.00	1.00	0.76	1.00	1.00	1.00	0.81
		ΔT	29	27	24	21	29	27	24	21	29	27	24	21	29	27	24	21	29	27	24	20	30	28	25	21
		kW	1.48	1.48	1.47	1.49	1.64	1.64	1.64	1.65	1.82	1.82	1.82	1.83	2.02	2.02	2.01	2.03	2.24	2.23	2.23	2.24	2.49	2.49	2.49	2.50
		Amps	5.3	5.3	5.3	5.4	6.1	6.1	6.1	6.1	6.9	6.9	6.9	6.9	7.8	7.8	7.8	7.8	8.8	8.8	8.8	8.8	10.0	10.0	10.0	10.0
		HI PR	247	248	250	254	286	287	288	293	326	327	329	333	369	371	372	376	416	417	419	423	466	467	469	473
		LO PR	128	130	133	138	136	138	141	146	143	144	147	153	148	150	153	158	154	155	159	164	161	162	166	171
	870	MBh	24.2	24.6	25.3	26.3	24.0	24.4	25.1	26.1	23.4	23.7	24.4	25.5	22.4	22.7	23.4	24.5	21.1	21.4	22.1	23.2	19.9	20.2	20.9	22.0
		S/T	1.00	1.00	0.86	0.71	1.00	1.00	0.87	0.72	1.00	1.00	0.90	0.75	1.00	1.00	0.92	0.77	1.00	1.00	1.00	0.79	1.00	1.00	1.00	0.84
		ΔT	28	27	23	20	28	27	23	20	28	27	24	20	28	26	23	20	28	26	23	20	29	27	24	21
		kW	1.48	1.48	1.48	1.49	1.65	1.64	1.64	1.65	1.83	1.82	1.82	1.83	2.02	2.02	2.02	2.03	2.24	2.24	2.24	2.25	2.50	2.50	2.49	2.51
		Amps	5.4	5.3	5.3	5.4	6.1	6.1	6.1	6.1	6.9	6.9	6.9	7.0	7.8	7.8	7.8	7.9	8.8	8.8	8.8	8.9	10.0	10.0	10.0	10.0
		HI PR	248	249	251	255	287	288	289	294	327	328	330	334	371	372	373	378	417	419	420	425	468	469	470	475
		LO PR	129	131	134	140	137	139	142	147	144	145	148	154	149	151	154	159	155	156	160	165	162	163	167	172

IDB: Entering Indoor Dry Bulb Temperature

Shaded area reflects AHRI Rating Conditions.

kW = Total system power

High and low pressures are measured at the liquid and suction service valves.

Amps = Outdoor unit amps (compressor + fan)

			Outdoor Ambient Temperature																							
			65ºF				75ºF				85ºF				95ºF				105ºF				115ºF			
			Entering Indoor Wet Bulb Temperature																							
IDB	Airflow		59	63	67	71	59	63	67	71	59	63	67	71	59	63	67	71	59	63	67	71	59	63	67	71
70	700	MBh	23.3	23.6	24.3	-	23.1	23.4	24.1	-	22.5	22.8	23.5	-	21.4	21.7	22.4	-	20.1	20.4	21.1	-	18.9	19.3	20.0	-
		S/T	0.61	0.52	0.38	-	0.61	0.53	0.39	-	0.64	0.56	0.41	-	0.66	0.58	0.43	-	1.00	0.60	0.46	-	1.00	0.66	0.51	-
		ΔT	64	58	47	-	64	58	47	-	64	59	48	-	64	58	47	-	63	57	46	-	66	61	50	-
		kW	1.46	1.45	1.45	-	1.62	1.62	1.62	-	1.81	1.80	1.80	-	2.01	2.00	2.00	-	2.23	2.23	2.23	-	2.49	2.49	2.49	-
		Amps	5.4	5.4	5.4	-	6.2	6.2	6.2	-	7.0	7.0	7.0	-	7.9	7.9	7.9	-	9.0	9.0	9.0	-	10.2	10.2	10.2	-
		Hi PR	242	243	245	-	280	281	283	-	321	322	323	-	364	365	367	-	410	411	413	-	460	461	463	-
		Lo PR	123	124	127	-	130	132	135	-	137	138	142	-	142	144	147	-	148	149	153	-	155	156	159	-
	800	MBh	23.5	23.9	24.6	-	23.3	23.7	24.4	-	22.7	23.0	23.7	-	21.7	22.0	22.7	-	20.4	20.7	21.4	-	19.2	19.5	20.2	-
		S/T	0.68	0.60	0.45	-	0.69	0.61	0.46	-	0.71	0.63	0.49	-	1.00	0.65	0.51	-	1.00	0.68	0.53	-	1.00	0.73	0.59	-
		ΔT	60	54	44	-	60	54	44	-	61	55	44	-	60	54	44	-	59	54	43	-	63	57	46	-
		kW	1.46	1.46	1.46	-	1.63	1.63	1.63	-	1.81	1.81	1.81	-	2.01	2.01	2.01	-	2.24	2.24	2.23	-	2.50	2.50	2.50	-
		Amps	5.5	5.5	5.5	-	6.2	6.2	6.2	-	7.1	7.1	7.1	-	8.0	8.0	8.0	-	9.0	9.0	9.0	-	10.2	10.2	10.2	-
		Hi PR	244	245	247	-	282	283	285	-	323	324	325	-	366	367	369	-	412	413	415	-	462	463	465	-
		Lo PR	124	126	129	-	132	133	137	-	139	140	143	-	144	146	149	-	150	151	154	-	156	158	161	-
	858	MBh	23.7	24.0	24.7	-	23.5	23.8	24.5	-	22.9	23.2	23.9	-	21.8	22.2	22.9	-	20.6	20.9	21.6	-	19.4	19.7	20.4	-
		S/T	0.71	0.63	0.49	-	0.72	0.64	0.49	-	0.75	0.66	0.52	-	1.00	0.69	0.54	-	1.00	0.71	0.56	-	1.00	0.76	0.62	-
		ΔT	58	53	42	-	58	53	42	-	59	53	43	-	58	52	42	-	57	52	41	-	61	55	45	-
		kW	1.47	1.47	1.46	-	1.63	1.63	1.63	-	1.82	1.82	1.82	-	2.02	2.02	2.02	-	2.24	2.24	2.24	-	2.50	2.50	2.50	-
		Amps	5.5	5.5	5.5	-	6.2	6.2	6.2	-	7.1	7.1	7.1	-	8.0	8.0	8.0	-	9.0	9.0	9.0	-	10.2	10.2	10.2	-
		Hi PR	245	246	248	-	283	284	286	-	324	325	326	-	367	368	370	-	414	415	416	-	463	464	466	-
		Lo PR	125	127	130	-	133	134	138	-	140	141	144	-	145	147	150	-	151	152	155	-	157	159	162	-
75	700	MBh	23.3	23.6	24.3	25.4	23.1	23.4	24.1	25.2	22.5	22.8	23.5	24.6	21.4	21.7	22.4	23.5	20.1	20.5	21.2	22.2	19.0	19.3	20.0	21.1
		S/T	0.74	0.66	0.52	0.36	0.75	0.67	0.52	0.37	1.00	0.70	0.55	0.40	1.00	0.72	0.57	0.42	1.00	0.74	0.60	0.44	1.00	1.00	0.65	0.50
		ΔT	76	71	60	49	76	70	60	49	77	71	61	50	76	70	60	49	75	70	59	48	79	73	63	52
		kW	1.45	1.45	1.45	1.46	1.62	1.62	1.62	1.63	1.80	1.80	1.80	1.81	2.00	2.00	2.00	2.01	2.23	2.23	2.22	2.24	2.49	2.49	2.49	2.50
		Amps	5.4	5.4	5.4	5.5	6.2	6.2	6.2	6.2	7.0	7.0	7.0	7.1	7.9	7.9	7.9	8.0	9.0	9.0	8.9	9.0	10.2	10.2	10.1	10.2
		Hi PR	242	243	245	249	281	282	283	288	321	322	323	328	364	365	367	371	411	412	413	418	460	461	463	467
		Lo PR	123	124	127	133	130	132	135	140	137	138	142	147	142	144	147	152	148	149	153	158	155	156	159	165
	800	MBh	23.5	23.9	24.6	25.6	23.3	23.7	24.4	25.4	22.7	23.1	23.8	24.8	21.7	22.0	22.7	23.8	20.4	20.7	21.4	22.5	19.2	19.5	20.2	21.3
		S/T	0.82	0.74	0.59	0.44	0.83	0.74	0.60	0.45	1.00	0.77	0.63	0.47	1.00	0.79	0.65	0.49	1.00	0.82	0.67	0.52	1.00	1.00	0.73	0.57
		ΔT	73	67	56	45	73	67	56	45	73	68	57	46	73	67	56	45	72	66	55	44	75	70	59	48
		kW	1.46	1.46	1.46	1.47	1.63	1.63	1.62	1.64	1.81	1.81	1.81	1.82	2.01	2.01	2.01	2.02	2.24	2.24	2.23	2.25	2.50	2.50	2.50	2.51
		Amps	5.5	5.5	5.4	5.5	6.2	6.2	6.2	6.3	7.1	7.1	7.1	7.1	8.0	8.0	8.0	8.0	9.0	9.0	9.0	9.0	10.2	10.2	10.2	10.2
		Hi PR	244	245	247	251	283	284	285	290	323	324	325	330	366	367	369	373	413	414	415	420	462	463	465	469
		Lo PR	124	126	129	134	132	133	137	142	139	140	143	148	144	146	149	154	150	151	154	160	156	158	161	166
	858	MBh	23.7	24.1	24.8	25.8	23.5	23.8	24.5	25.6	22.9	23.2	23.9	25.0	21.8	**22.2**	22.9	23.9	20.6	20.9	21.6	22.7	19.4	19.7	20.4	21.5
		S/T	0.85	0.77	0.62	0.47	0.86	0.78	0.63	0.48	1.00	0.80	0.66	0.50	1.00	**0.82**	0.68	0.53	1.00	0.85	0.70	0.55	1.00	1.00	0.76	0.60
		ΔT	71	65	55	44	71	65	54	43	72	66	55	44	71	**65**	54	43	70	64	54	43	74	68	57	46
		kW	1.47	1.47	1.46	1.48	1.63	1.63	1.63	1.64	1.82	1.82	1.81	1.83	2.02	**2.02**	2.01	2.03	2.24	2.24	2.24	2.25	2.50	2.50	2.50	2.51
		Amps	5.5	5.5	5.5	5.5	6.2	6.2	6.2	6.3	7.1	7.1	7.1	7.1	8.0	**8.0**	8.0	8.0	9.0	9.0	9.0	9.1	10.2	10.2	10.2	10.3
		Hi PR	245	246	248	252	284	285	286	291	324	325	327	331	367	**368**	370	374	414	415	417	421	464	465	466	471
		Lo PR	125	127	130	135	133	134	138	143	140	141	144	149	145	**147**	150	155	151	152	155	161	157	159	162	167

IDB: Entering Indoor Dry Bulb Temperature

High and low pressures are measured at the liquid and suction service valves.

Shaded area reflects ACCA (TVA) Rating Conditions.

kW = Total system power

Amps = Outdoor unit amps (compressor + fan)

			Outdoor Ambient Temperature																							
			65ºF				75ºF				85ºF				95ºF				105ºF				115ºF			
			Entering Indoor Wet Bulb Temperature																							
IDB	Airflow		59	63	67	71	59	63	67	71	59	63	67	71	59	63	67	71	59	63	67	71	59	63	67	71
80	700	MBh	23.4	23.7	24.4	25.5	23.2	23.5	24.2	25.3	22.6	22.9	23.6	24.7	21.5	21.9	22.6	23.6	20.2	20.6	21.3	22.3	19.1	19.4	20.1	21.2
		S/T	1.00	0.80	0.65	0.50	1.00	0.80	0.66	0.51	1.00	0.83	0.69	0.53	1.00	0.85	0.71	0.55	1.00	1.00	0.73	0.58	1.00	1.00	0.78	0.63
		ΔT	89	83	73	62	89	83	72	61	90	84	73	62	89	83	72	61	88	82	72	61	92	86	75	64
		kW	1.46	1.45	1.45	1.46	1.62	1.62	1.62	1.63	1.81	1.80	1.80	1.81	2.01	2.00	2.00	2.01	2.23	2.23	2.23	2.24	2.49	2.49	2.49	2.50
		Amps	5.4	5.4	5.4	5.5	6.2	6.2	6.2	6.2	7.0	7.0	7.0	7.1	7.9	7.9	7.9	8.0	9.0	9.0	9.0	9.0	10.2	10.2	10.2	10.2
		Hi PR	243	244	245	250	281	282	284	288	321	322	324	328	364	365	367	371	411	412	414	418	461	462	464	468
		Lo PR	123	125	128	133	131	132	136	141	137	139	142	147	143	145	148	153	148	150	153	158	155	157	160	165
	800	MBh	23.7	24.0	24.7	25.8	23.5	23.8	24.5	25.6	22.8	23.2	23.9	24.9	21.8	22.1	22.8	23.9	20.5	20.8	21.5	22.6	19.3	19.7	20.4	21.4
		S/T	1.00	0.87	0.73	0.57	1.00	0.88	0.73	0.58	1.00	0.91	0.76	0.61	1.00	1.00	0.78	0.63	1.00	1.00	0.80	0.65	1.00	1.00	0.86	0.71
		ΔT	85	80	69	58	85	80	69	58	86	80	70	59	85	80	69	58	84	79	68	57	88	82	72	61
		kW	1.46	1.46	1.46	1.47	1.63	1.63	1.63	1.64	1.81	1.81	1.81	1.82	2.01	2.01	2.01	2.02	2.24	2.24	2.23	2.25	2.50	2.50	2.50	2.51
		Amps	5.5	5.5	5.5	5.5	6.2	6.2	6.2	6.3	7.1	7.1	7.1	7.1	8.0	8.0	8.0	8.0	9.0	9.0	9.0	9.1	10.2	10.2	10.2	10.3
		Hi PR	245	246	247	252	283	284	286	290	323	324	326	330	366	367	369	373	413	414	416	420	463	464	466	470
		Lo PR	125	127	130	135	133	134	137	142	139	141	144	149	145	146	149	155	150	152	155	160	157	158	162	167
	858	MBh	23.8	24.2	24.9	25.9	23.6	24.0	24.7	25.7	23.0	23.4	24.1	25.1	22.0	22.3	**23.0**	24.1	20.7	21.0	21.7	22.8	19.5	19.8	20.5	21.6
		S/T	1.00	0.90	0.76	0.61	1.00	0.91	0.76	0.61	1.00	0.94	0.79	0.64	1.00	1.00	**0.81**	0.66	1.00	1.00	0.84	0.68	1.00	1.00	0.89	0.74
		ΔT	84	78	67	56	84	78	67	56	84	79	68	57	83	78	**67**	56	83	77	66	55	86	81	70	59
		kW	1.47	1.47	1.46	1.48	1.63	1.63	1.63	1.64	1.82	1.82	1.81	1.83	2.02	2.02	**2.01**	2.03	2.24	2.24	2.24	2.25	2.50	2.50	2.50	2.51
		Amps	5.5	5.5	5.5	5.5	6.2	6.2	6.2	6.3	7.1	7.1	7.1	7.1	8.0	8.0	**8.0**	8.0	9.0	9.0	9.0	9.1	10.2	10.2	10.2	10.3
		Hi PR	246	247	249	253	284	285	287	291	324	325	327	331	368	369	**370**	375	414	415	417	421	464	465	467	471
		Lo PR	126	128	131	136	134	135	138	143	140	142	145	150	146	147	**150**	156	151	153	156	161	158	159	163	168
85	700	MBh	23.8	24.1	24.8	25.9	23.6	23.9	24.6	25.7	23.0	23.3	24.0	25.1	21.9	22.3	23.0	24.0	20.6	21.0	21.7	22.7	19.5	19.8	20.5	21.6
		S/T	1.00	0.91	0.76	0.61	1.00	0.91	0.77	0.61	1.00	1.00	0.79	0.64	1.00	1.00	0.81	0.66	1.00	1.00	0.84	0.69	1.00	1.00	1.00	0.74
		ΔT	100	95	84	73	100	94	84	73	101	95	85	73	100	94	84	73	99	94	83	72	103	97	86	75
		kW	1.46	1.46	1.45	1.47	1.62	1.62	1.62	1.63	1.81	1.81	1.80	1.82	2.01	2.01	2.00	2.02	2.23	2.23	2.23	2.24	2.49	2.49	2.49	2.50
		Amps	5.4	5.4	5.4	5.5	6.2	6.2	6.2	6.2	7.0	7.0	7.0	7.1	8.0	8.0	7.9	8.0	9.0	9.0	9.0	9.0	10.2	10.2	10.2	10.2
		Hi PR	244	245	247	251	282	283	285	289	322	323	325	329	366	367	368	373	412	413	415	419	462	463	465	469
		Lo PR	125	127	130	135	133	134	137	143	139	141	144	149	145	146	150	155	150	152	155	160	157	159	162	167
	800	MBh	24.1	24.4	25.1	26.2	23.9	24.2	24.9	26.0	23.2	23.6	24.3	25.3	22.2	22.5	23.2	24.3	20.9	21.2	21.9	23.0	19.7	20.1	20.8	21.8
		S/T	1.00	0.98	0.84	0.68	1.00	1.00	0.84	0.69	1.00	1.00	0.87	0.72	1.00	1.00	0.89	0.74	1.00	1.00	0.91	0.76	1.00	1.00	1.00	0.82
		ΔT	97	91	80	69	97	91	80	69	97	92	81	70	96	91	80	69	96	90	79	68	99	94	83	72
		kW	1.47	1.47	1.46	1.48	1.63	1.63	1.63	1.64	1.82	1.82	1.81	1.83	2.02	2.02	2.01	2.03	2.24	2.24	2.24	2.25	2.50	2.50	2.50	2.51
		Amps	5.5	5.5	5.5	5.5	6.2	6.2	6.2	6.3	7.1	7.1	7.1	7.1	8.0	8.0	8.0	8.0	9.0	9.0	9.0	9.1	10.2	10.2	10.2	10.3
		Hi PR	246	247	249	253	284	285	287	291	324	325	327	331	368	369	370	375	414	415	417	421	464	465	467	471
		Lo PR	127	128	132	137	134	136	139	144	141	142	146	151	147	148	151	156	152	153	157	162	159	160	163	169
	858	MBh	24.2	24.6	25.3	26.3	24.0	24.4	25.1	26.1	23.4	23.7	24.4	25.5	22.4	22.7	23.4	24.5	21.1	21.4	22.1	23.2	19.9	20.2	20.9	22.0
		S/T	1.00	1.00	0.87	0.71	1.00	1.00	0.87	0.72	1.00	1.00	0.90	0.75	1.00	1.00	0.92	0.77	1.00	1.00	0.94	0.79	1.00	1.00	1.00	0.85
		ΔT	95	89	78	67	95	89	78	67	96	90	79	68	95	89	78	67	94	88	78	66	98	92	81	70
		kW	1.47	1.47	1.47	1.48	1.64	1.64	1.63	1.65	1.82	1.82	1.82	1.83	2.02	2.02	2.02	2.03	2.25	2.24	2.24	2.25	2.51	2.51	2.50	2.52
		Amps	5.5	5.5	5.5	5.5	6.3	6.3	6.2	6.3	7.1	7.1	7.1	7.1	8.0	8.0	8.0	8.1	9.0	9.0	9.0	9.1	10.2	10.2	10.2	10.3
		Hi PR	247	248	250	254	285	286	288	292	325	326	328	332	369	370	371	376	415	416	418	422	465	466	468	472
		Lo PR	128	129	133	138	135	137	140	145	142	143	147	152	148	149	152	157	153	155	158	163	160	161	164	170

IDB: Entering Indoor Dry Bulb Temperature

High and low pressures are measured at the liquid and suction service valves.

Shaded area reflects AHRI Rating Conditions.

kW = Total system power

Amps = Outdoor unit amps (compressor + fan)

			OUTDOOR AMBIENT TEMPERATURE																							
			65ºF				75ºF				85ºF				95ºF				105ºF				115ºF			
			ENTERING INDOOR WET BULB TEMPERATURE																							
IDB	AIRFLOW		59	63	67	71	59	63	67	71	59	63	67	71	59	63	67	71	59	63	67	71	59	63	67	71
70	870	MBh	28.4	28.8	29.7	-	28.2	28.6	29.4	-	27.5	27.9	28.7	-	26.2	26.6	27.4	-	24.7	25.1	25.9	-	23.3	23.6	24.5	-
		S/T	0.65	0.57	0.44	-	0.66	0.58	0.45	-	0.68	0.61	0.47	-	0.70	0.62	0.49	-	0.72	0.65	0.51	-	1.00	0.70	0.56	-
		ΔT	19	17	13	-	19	17	13	-	19	17	14	-	19	17	13	-	18	17	13	-	20	18	14	-
		kW	1.69	1.69	1.68	-	1.89	1.89	1.89	-	2.12	2.11	2.11	-	2.36	2.36	2.35	-	2.63	2.63	2.63	-	2.95	2.95	2.95	-
		Amps	6.5	6.5	6.5	-	7.5	7.5	7.4	-	8.5	8.5	8.5	-	9.6	9.6	9.6	-	10.9	10.9	10.8	-	12.3	12.3	12.3	-
		HI PR	250	251	253	-	289	290	292	-	330	331	333	-	374	375	377	-	422	423	425	-	473	474	475	-
		LO PR	118	120	123	-	125	127	130	-	131	133	136	-	137	138	141	-	142	143	146	-	148	150	153	-
	1000	MBh	29.0	29.4	30.2	-	28.7	29.1	30.0	-	28.0	28.4	29.2	-	26.7	27.1	28.0	-	25.2	25.6	26.4	-	23.8	24.2	25.0	-
		S/T	0.69	0.61	0.48	-	0.69	0.62	0.49	-	0.72	0.64	0.51	-	0.74	0.66	0.53	-	1.00	0.68	0.55	-	1.00	0.73	0.60	-
		ΔT	18	16	12	-	18	16	12	-	18	16	13	-	18	16	12	-	17	15	12	-	18	17	13	-
		kW	1.70	1.70	1.69	-	1.90	1.90	1.90	-	2.13	2.12	2.12	-	2.37	2.37	2.36	-	2.64	2.64	2.64	-	2.96	2.96	2.96	-
		Amps	6.6	6.6	6.6	-	7.5	7.5	7.5	-	8.5	8.5	8.5	-	9.7	9.7	9.6	-	10.9	10.9	10.9	-	12.4	12.4	12.4	-
		HI PR	252	254	255	-	292	293	294	-	333	334	335	-	377	378	380	-	424	425	427	-	475	476	478	-
		LO PR	120	122	125	-	128	129	132	-	134	135	138	-	139	140	143	-	144	146	149	-	151	152	155	-
	1125	MBh	29.6	30.0	30.9	-	29.4	29.8	30.6	-	28.6	29.0	29.9	-	27.4	27.8	28.6	-	25.8	26.2	27.1	-	24.4	24.8	25.7	-
		S/T	0.69	0.62	0.49	-	0.70	0.62	0.49	-	0.72	0.65	0.52	-	0.74	0.67	0.54	-	1.00	0.69	0.56	-	1.00	0.74	0.61	-
		ΔT	17	15	11	-	17	15	11	-	17	15	12	-	17	15	11	-	16	15	11	-	17	16	12	-
		kW	1.71	1.71	1.70	-	1.91	1.91	1.90	-	2.13	2.13	2.13	-	2.38	2.38	2.37	-	2.65	2.65	2.65	-	2.97	2.97	2.97	-
		Amps	6.6	6.6	6.6	-	7.6	7.6	7.5	-	8.6	8.6	8.6	-	9.7	9.7	9.7	-	11.0	10.9	10.9	-	12.4	12.4	12.4	-
		HI PR	255	256	258	-	294	295	297	-	335	336	338	-	379	380	382	-	427	428	430	-	478	479	480	-
		LO PR	123	124	127	-	130	132	134	-	136	138	141	-	142	143	146	-	147	148	151	-	153	155	158	-
75	870	MBh	28.5	28.9	29.7	31.0	28.2	28.6	29.4	30.7	27.5	27.9	28.7	30.0	26.2	**26.6**	27.5	28.7	24.7	25.1	25.9	27.2	23.3	23.7	24.5	25.8
		S/T	0.77	0.70	0.57	0.43	0.78	0.71	0.57	0.44	0.81	0.73	0.60	0.46	1.00	**0.75**	0.62	0.48	1.00	0.77	0.64	0.50	1.00	0.82	0.69	0.55
		ΔT	23	21	17	14	23	21	17	14	23	21	18	14	23	**21**	17	14	22	21	17	14	24	22	18	15
		kW	1.69	1.69	1.68	1.70	1.89	1.89	1.88	1.90	2.11	2.11	2.11	2.12	2.36	**2.36**	2.35	2.37	2.63	2.63	2.63	2.64	2.95	2.95	2.95	2.96
		Amps	6.5	6.5	6.5	6.6	7.5	7.5	7.4	7.5	8.5	8.5	8.5	8.5	9.6	**9.6**	9.6	9.7	10.9	10.9	10.8	10.9	12.3	12.3	12.3	12.4
		HI PR	250	251	253	257	289	290	292	297	330	331	333	337	374	**376**	377	382	422	423	425	429	473	474	476	480
		LO PR	118	120	123	128	125	127	130	135	131	133	136	141	137	**138**	141	146	142	143	146	151	148	150	153	158
	1000	MBh	29.0	29.4	30.2	31.5	28.8	29.1	30.0	31.3	28.0	28.4	29.3	30.5	26.8	**27.2**	28.0	29.3	25.2	25.6	26.5	27.7	23.8	24.2	25.0	26.3
		S/T	0.81	0.74	0.61	0.47	0.82	0.74	0.61	0.47	1.00	0.77	0.64	0.50	1.00	**0.79**	0.65	0.52	1.00	0.81	0.68	0.54	1.00	0.86	0.73	0.59
		ΔT	22	20	16	13	22	20	16	13	22	20	17	13	22	**20**	16	13	21	19	16	13	22	21	17	14
		kW	1.70	1.70	1.69	1.71	1.90	1.90	1.89	1.91	2.12	2.12	2.12	2.14	2.37	**2.37**	2.36	2.38	2.64	2.64	2.64	2.65	2.96	2.96	2.96	2.97
		Amps	6.6	6.6	6.6	6.6	7.5	7.5	7.5	7.6	8.5	8.5	8.5	8.6	9.7	**9.7**	9.6	9.7	10.9	10.9	10.9	11.0	12.4	12.4	12.3	12.4
		HI PR	253	254	256	260	292	293	295	299	333	334	336	340	377	**378**	380	384	425	426	427	432	475	476	478	482
		LO PR	120	122	125	130	128	129	132	137	134	135	138	143	139	**140**	143	148	144	146	149	153	151	152	155	160
	1125	MBh	29.6	30.0	30.9	32.2	29.4	29.8	30.6	31.9	28.7	29.1	29.9	31.2	27.4	**27.8**	28.6	29.9	25.9	26.3	27.1	28.4	24.5	24.8	25.7	27.0
		S/T	0.82	0.74	0.61	0.47	0.82	0.75	0.62	0.48	1.00	0.77	0.64	0.50	1.00	**0.79**	0.66	0.52	1.00	0.81	0.68	0.54	1.00	0.86	0.73	0.59
		ΔT	21	19	15	12	21	19	15	12	21	19	16	12	21	**19**	15	12	20	19	15	12	22	20	16	13
		kW	1.71	1.70	1.70	1.72	1.91	1.91	1.90	1.92	2.13	2.13	2.13	2.14	2.38	**2.38**	2.37	2.39	2.65	2.65	2.64	2.66	2.97	2.97	2.96	2.98
		Amps	6.6	6.6	6.6	6.7	7.6	7.5	7.5	7.6	8.6	8.6	8.6	8.6	9.7	**9.7**	9.7	9.7	10.9	10.9	10.9	11.0	12.4	12.4	12.4	12.5
		HI PR	255	256	258	262	294	295	297	301	335	336	338	342	379	**380**	382	387	427	428	430	434	478	479	481	485
		LO PR	123	124	127	132	130	132	135	139	136	138	141	146	142	**143**	146	151	147	148	151	156	153	155	158	163

IDB: Entering Indoor Dry Bulb Temperature

High and low pressures are measured at the liquid and suction service valves.

Shaded area reflects ACCA (TVA) Rating Conditions.

kW = Total system power

Amps = Outdoor unit amps (compressor + fan)

			Outdoor Ambient Temperature																							
			65ºF				75ºF				85ºF				95ºF				105ºF				115ºF			
			Entering Indoor Wet Bulb Temperature																							
IDB	Airflow		59	63	67	71	59	63	67	71	59	63	67	71	59	63	67	71	59	63	67	71	59	63	67	71
80	870	MBh	28.6	29.0	29.8	31.1	28.4	28.8	29.6	30.9	27.6	28.0	28.9	30.1	26.4	26.8	**27.6**	28.9	24.8	25.2	26.1	27.3	23.4	23.8	24.7	25.9
		S/T	0.90	0.82	0.69	0.55	1.00	0.83	0.70	0.56	1.00	0.85	0.72	0.58	1.00	0.87	**0.74**	0.60	1.00	0.89	0.76	0.62	1.00	1.00	0.81	0.67
		ΔT	27	25	22	18	27	25	21	18	27	25	22	18	27	25	**21**	18	26	25	21	18	28	26	22	19
		kW	1.69	1.69	1.68	1.70	1.89	1.89	1.88	1.90	2.12	2.11	2.11	2.13	2.36	2.36	**2.35**	2.37	2.63	2.63	2.63	2.64	2.95	2.95	2.95	2.96
		Amps	6.5	6.5	6.5	6.6	7.5	7.5	7.4	7.5	8.5	8.5	8.5	8.5	9.6	9.6	**9.6**	9.7	10.9	10.9	10.8	10.9	12.3	12.3	12.3	12.4
		HI PR	251	252	254	258	290	291	293	297	331	332	334	338	375	376	**378**	382	423	424	425	430	473	474	476	480
		LO PR	119	120	123	128	126	127	130	135	132	133	136	141	137	139	**142**	147	142	144	147	152	149	150	153	158
	1000	MBh	29.2	29.5	30.4	31.7	28.9	29.3	30.1	31.4	28.2	28.6	29.4	30.7	26.9	27.3	28.1	29.4	25.4	25.8	26.6	27.9	24.0	24.4	25.2	26.5
		S/T	0.93	0.86	0.73	0.59	1.00	0.87	0.73	0.59	1.00	0.89	0.76	0.62	1.00	0.91	0.78	0.64	1.00	1.00	0.80	0.66	1.00	1.00	0.85	0.71
		ΔT	26	24	20	17	26	24	20	17	26	24	21	17	26	24	20	17	25	24	20	17	27	25	21	18
		kW	1.70	1.70	1.69	1.71	1.90	1.90	1.90	1.91	2.13	2.12	2.12	2.14	2.37	2.37	2.36	2.38	2.64	2.64	2.64	2.65	2.96	2.96	2.96	2.97
		Amps	6.6	6.6	6.6	6.6	7.5	7.5	7.5	7.6	8.5	8.5	8.5	8.6	9.7	9.7	9.6	9.7	10.9	10.9	10.9	11.0	12.4	12.4	12.4	12.4
		HI PR	253	254	256	260	292	293	295	299	333	334	336	340	377	378	380	385	425	426	428	432	476	477	479	483
		LO PR	121	122	125	130	128	129	132	137	134	136	139	144	139	141	144	149	145	146	149	154	151	153	155	160
	1125	MBh	29.8	30.2	31.0	32.3	29.5	29.9	30.8	32.1	28.8	29.2	30.0	31.3	27.5	27.9	28.8	30.1	26.0	26.4	27.2	28.5	24.6	25.0	25.8	27.1
		S/T	1.00	0.87	0.73	0.59	1.00	0.87	0.74	0.60	1.00	0.90	0.76	0.63	1.00	0.92	0.78	0.64	1.00	1.00	0.80	0.67	1.00	1.00	0.86	0.72
		ΔT	25	23	19	16	25	23	19	16	25	23	20	16	25	23	19	16	24	23	19	16	26	24	20	17
		kW	1.71	1.71	1.70	1.72	1.91	1.91	1.90	1.92	2.13	2.13	2.13	2.14	2.38	2.38	2.37	2.39	2.65	2.65	2.65	2.66	2.97	2.97	2.97	2.98
		Amps	6.6	6.6	6.6	6.7	7.6	7.5	7.5	7.6	8.6	8.6	8.6	8.6	9.7	9.7	9.7	9.8	11.0	10.9	10.9	11.0	12.4	12.4	12.4	12.5
		HI PR	256	257	258	263	295	296	298	302	336	337	339	343	380	381	383	387	427	428	430	435	478	479	481	485
		LO PR	124	125	128	133	131	132	135	140	137	138	141	146	142	144	146	151	147	149	152	157	154	155	158	163
85	870	MBh	29.1	29.5	30.3	31.6	28.8	29.2	30.1	31.3	28.1	28.5	29.3	30.6	26.8	27.2	28.1	29.4	25.3	25.7	26.5	27.8	23.9	24.3	25.1	26.4
		S/T	1.00	0.92	0.79	0.65	1.00	0.93	0.80	0.66	1.00	0.95	0.82	0.68	1.00	1.00	0.84	0.70	1.00	1.00	0.86	0.72	1.00	1.00	0.91	0.77
		ΔT	30	29	25	22	30	28	25	22	31	29	25	22	30	28	25	22	30	28	25	21	31	29	26	22
		kW	1.69	1.69	1.69	1.70	1.89	1.89	1.89	1.90	2.12	2.12	2.11	2.13	2.36	2.36	2.36	2.37	2.64	2.63	2.63	2.65	2.96	2.95	2.95	2.97
		Amps	6.6	6.6	6.5	6.6	7.5	7.5	7.5	7.5	8.5	8.5	8.5	8.6	9.6	9.6	9.6	9.7	10.9	10.9	10.9	10.9	12.3	12.3	12.3	12.4
		HI PR	252	253	255	259	291	292	294	298	332	333	335	339	376	377	379	383	424	425	427	431	474	476	477	482
		LO PR	120	122	125	130	127	129	132	137	134	135	138	143	139	140	143	148	144	146	148	153	151	152	155	160
	1000	MBh	29.6	30.0	30.9	32.1	29.4	29.8	30.6	31.9	28.6	29.0	29.9	31.2	27.4	27.8	28.6	29.9	25.8	26.2	27.1	28.4	24.4	24.8	25.7	26.9
		S/T	1.00	0.96	0.83	0.69	1.00	0.96	0.83	0.69	1.00	1.00	0.86	0.72	1.00	1.00	0.88	0.74	1.00	1.00	0.90	0.76	1.00	1.00	0.95	0.81
		ΔT	29	27	24	20	29	27	24	20	29	28	24	21	29	27	24	20	29	27	24	20	30	28	25	21
		kW	1.70	1.70	1.70	1.71	1.90	1.90	1.90	1.91	2.13	2.13	2.12	2.14	2.37	2.37	2.37	2.38	2.65	2.64	2.64	2.66	2.97	2.96	2.96	2.98
		Amps	6.6	6.6	6.6	6.7	7.5	7.5	7.5	7.6	8.6	8.6	8.5	8.6	9.7	9.7	9.7	9.7	10.9	10.9	10.9	11.0	12.4	12.4	12.4	12.4
		HI PR	254	255	257	261	293	295	296	301	334	335	337	342	379	380	381	386	426	427	429	433	477	478	480	484
		LO PR	123	124	127	132	130	131	134	139	136	137	140	145	141	143	146	151	146	148	151	156	153	154	157	162
	1125	MBh	30.3	30.7	31.5	32.8	30.0	30.4	31.2	32.5	29.3	29.7	30.5	31.8	28.0	28.4	29.3	30.5	26.5	26.9	27.7	29.0	25.1	25.5	26.3	27.6
		S/T	1.00	0.96	0.83	0.69	1.00	0.97	0.84	0.70	1.00	1.00	0.86	0.72	1.00	1.00	0.88	0.74	1.00	1.00	0.90	0.76	1.00	1.00	1.00	0.81
		ΔT	28	27	23	20	28	26	23	19	29	27	23	20	28	26	23	19	28	26	23	19	29	27	24	20
		kW	1.71	1.71	1.71	1.72	1.91	1.91	1.91	1.92	2.14	2.14	2.13	2.15	2.38	2.38	2.38	2.39	2.65	2.65	2.65	2.67	2.97	2.97	2.97	2.98
		Amps	6.7	6.6	6.6	6.7	7.6	7.6	7.6	7.6	8.6	8.6	8.6	8.7	9.7	9.7	9.7	9.8	11.0	11.0	10.9	11.0	12.4	12.4	12.4	12.5
		HI PR	257	258	260	264	296	297	299	303	337	338	340	344	381	382	384	388	429	430	431	436	479	480	482	486
		LO PR	125	127	130	135	132	134	137	142	139	140	143	148	144	145	148	153	149	150	153	158	155	157	160	165

IDB: Entering Indoor Dry Bulb Temperature

High and low pressures are measured at the liquid and suction service valves.

Shaded area reflects AHRI Rating Conditions.

kW = Total system power

Amps = Outdoor unit amps (compressor + fan)

			Outdoor Ambient Temperature																							
			65ºF				75ºF				85ºF				95ºF				105ºF				115ºF			
			Entering Indoor Wet Bulb Temperature																							
IDB	Airflow		59	63	67	71	59	63	67	71	59	63	67	71	59	63	67	71	59	63	67	71	59	63	67	71
70	870	MBh	28.9	29.3	30.1	-	28.6	29.0	29.9	-	27.9	28.3	29.1	-	26.6	27.0	27.8	-	25.0	25.4	26.3	-	23.6	24.0	24.8	-
		S/T	0.65	0.57	0.44	-	0.65	0.58	0.45	-	0.68	0.60	0.47	-	0.70	0.62	0.49	-	0.72	0.65	0.51	-	1.00	0.70	0.56	-
		ΔT	19.01	17.15	13.67	-	18.96	17.10	13.62	-	19.22	17.36	13.88	-	18.94	17.08	13.60	-	18.69	16.83	13.35	-	19.86	18.00	14.52	-
		kW	1.73	1.73	1.72	-	1.92	1.92	1.91	-	2.13	2.13	2.12	-	2.36	2.35	2.35	-	2.61	2.61	2.61	-	2.91	2.91	2.90	-
		Amps	6.63	6.62	6.61	-	7.49	7.49	7.47	-	8.46	8.45	8.43	-	9.50	9.49	9.48	-	10.66	10.66	10.64	-	12.03	12.02	12.01	-
		HI PR	242	243	244	-	280	281	282	-	319	320	322	-	362	363	365	-	408	409	411	-	457	458	460	-
		LO PR	118	119	122	-	125	126	129	-	131	133	136	-	136	138	141	-	142	143	146	-	148	149	152	-
	1000	MBh	29.4	29.8	30.7	-	29.2	29.6	30.4	-	28.4	28.8	29.7	-	27.1	27.5	28.4	-	25.6	26.0	26.8	-	24.1	24.5	25.4	-
		S/T	0.69	0.61	0.48	-	0.69	0.62	0.49	-	0.72	0.64	0.51	-	0.73	0.66	0.53	-	1.00	0.68	0.55	-	1.00	0.73	0.60	-
		ΔT	17.89	16.03	12.55	-	17.84	15.98	12.50	-	18.10	16.24	12.76	-	17.82	15.96	12.48	-	17.57	15.71	12.23	-	18.74	16.88	13.40	-
		kW	1.74	1.74	1.73	-	1.93	1.93	1.92	-	2.14	2.14	2.13	-	2.36	2.36	2.36	-	2.62	2.62	2.61	-	2.92	2.92	2.91	-
		Amps	6.67	6.67	6.65	-	7.54	7.53	7.51	-	8.50	8.49	8.48	-	9.54	9.54	9.52	-	10.71	10.70	10.69	-	12.07	12.07	12.05	-
		HI PR	244	245	247	-	282	283	285	-	321	323	324	-	364	365	367	-	410	411	413	-	459	460	462	-
		LO PR	120	122	125	-	127	129	132	-	133	135	138	-	139	140	143	-	144	145	148	-	150	152	155	-
	1125	MBh	30.1	30.5	31.3	-	29.8	30.2	31.1	-	29.1	29.5	30.3	-	27.8	28.2	29.0	-	26.2	26.6	27.5	-	24.8	25.2	26.0	-
		S/T	0.69	0.62	0.49	-	0.70	0.62	0.49	-	0.72	0.65	0.52	-	0.74	0.67	0.53	-	1.00	0.69	0.56	-	1.00	0.74	0.61	-
		ΔT	16.95	15.09	11.61	-	16.90	15.04	11.56	-	17.16	15.30	11.82	-	16.88	15.02	11.54	-	16.63	14.77	11.29	-	17.80	15.93	12.46	-
		kW	1.75	1.74	1.74	-	1.93	1.93	1.93	-	2.15	2.14	2.14	-	2.37	2.37	2.37	-	2.63	2.63	2.62	-	2.93	2.92	2.92	-
		Amps	6.71	6.70	6.69	-	7.57	7.57	7.55	-	8.54	8.53	8.52	-	9.58	9.57	9.56	-	10.74	10.74	10.72	-	12.11	12.10	12.09	-
		HI PR	246	247	249	-	284	285	287	-	324	325	327	-	367	368	369	-	413	414	415	-	462	463	464	-
		LO PR	123	124	127	-	130	131	134	-	136	137	140	-	141	143	146	-	146	148	151	-	153	154	157	-
75	870	MBh	28.9	29.3	30.1	31.4	28.6	29.0	29.9	31.2	27.9	28.3	29.1	30.4	26.6	**27.0**	27.9	29.2	25.0	25.4	26.3	27.6	23.6	24.0	24.9	26.2
		S/T	0.77	0.70	0.57	0.43	0.78	0.71	0.57	0.43	0.80	0.73	0.60	0.46	1.00	**0.75**	0.62	0.48	1.00	0.77	0.64	0.50	1.00	0.82	0.69	0.55
		ΔT	23	21	18	14	23	21	18	14	23	21	18	14	23	**21**	18	14	23	21	17	14	24	22	19	15
		kW	1.73	1.73	1.72	1.74	1.92	1.91	1.91	1.93	2.13	2.12	2.12	2.14	2.35	**2.35**	2.35	2.36	2.61	2.61	2.60	2.62	2.91	2.91	2.90	2.92
		Amps	6.6	6.6	6.6	6.7	7.5	7.5	7.5	7.5	8.4	8.4	8.4	8.5	9.5	**9.5**	9.5	9.5	10.7	10.7	10.6	10.7	12.0	12.0	12.0	12.1
		HI PR	242	243	245	249	280	281	282	287	319	320	322	326	362	**363**	365	369	408	409	411	415	457	458	460	464
		LO PR	118	119	122	127	125	126	129	134	131	133	136	140	136	**138**	141	146	142	143	146	151	148	149	152	157
	1000	MBh	29.4	29.8	30.7	32.0	29.2	29.6	30.4	31.7	28.4	28.8	29.7	31.0	27.1	27.5	28.4	29.7	25.6	26.0	26.8	28.1	24.2	24.6	25.4	26.7
		S/T	0.81	0.74	0.60	0.47	0.82	0.74	0.61	0.47	1.00	0.77	0.64	0.50	1.00	0.79	0.65	0.51	1.00	0.81	0.68	0.54	1.00	0.86	0.73	0.59
		ΔT	22	20	17	13	22	20	17	13	22	20	17	13	22	20	17	13	22	20	16	13	23	21	17	14
		kW	1.74	1.74	1.73	1.75	1.93	1.92	1.92	1.94	2.14	2.13	2.13	2.15	2.36	2.36	2.36	2.37	2.62	2.62	2.61	2.63	2.92	2.92	2.91	2.93
		Amps	6.7	6.7	6.6	6.7	7.5	7.5	7.5	7.6	8.5	8.5	8.5	8.5	9.5	9.5	9.5	9.6	10.7	10.7	10.7	10.7	12.1	12.1	12.0	12.1
		HI PR	244	245	247	251	282	283	285	289	322	323	324	329	364	365	367	371	410	411	413	417	459	460	462	466
		LO PR	120	122	125	130	127	129	132	137	133	135	138	143	139	140	143	148	144	145	148	153	150	152	155	160
	1125	MBh	30.1	30.5	31.3	32.6	29.8	30.2	31.1	32.4	29.1	29.5	30.3	31.6	27.8	28.2	29.1	30.4	26.2	26.6	27.5	28.8	24.8	25.2	26.1	27.4
		S/T	0.82	0.74	0.61	0.47	0.82	0.75	0.62	0.48	1.00	0.77	0.64	0.50	1.00	0.79	0.66	0.52	1.00	0.81	0.68	0.54	1.00	0.86	0.73	0.59
		ΔT	21	19	16	12	21	19	16	12	21	19	16	12	21	19	16	12	21	19	15	12	22	20	17	13
		kW	1.75	1.74	1.74	1.75	1.93	1.93	1.93	1.94	2.14	2.14	2.14	2.15	2.37	2.37	2.37	2.38	2.63	2.62	2.62	2.64	2.92	2.92	2.92	2.93
		Amps	6.7	6.7	6.7	6.7	7.6	7.6	7.5	7.6	8.5	8.5	8.5	8.6	9.6	9.6	9.6	9.6	10.7	10.7	10.7	10.8	12.1	12.1	12.1	12.1
		HI PR	247	248	249	254	284	285	287	291	324	325	327	331	367	368	369	374	413	414	415	420	462	463	465	469
		LO PR	123	124	127	132	130	131	134	139	136	137	140	145	141	143	146	151	146	148	151	156	153	154	157	162

IDB: Entering Indoor Dry Bulb Temperature

High and low pressures are measured at the liquid and suction service valves.

Shaded area reflects ACCA (TVA) Rating Conditions.

kW = Total system power

Amps = Outdoor unit amps (compressor + fan)

			OUTDOOR AMBIENT TEMPERATURE																							
			65ºF				75ºF				85ºF				95ºF				105ºF				115ºF			
			ENTERING INDOOR WET BULB TEMPERATURE																							
IDB	AIRFLOW		59	63	67	71	59	63	67	71	59	63	67	71	59	63	67	71	59	63	67	71	59	63	67	71
80	870	MBh	29.0	29.4	30.3	31.6	28.8	29.2	30.0	31.3	28.0	28.4	29.3	30.6	26.7	27.1	**28.0**	29.3	25.2	25.6	26.4	27.7	23.8	24.2	25.0	26.3
		S/T	0.90	0.82	0.69	0.55	1.00	0.83	0.70	0.56	1.00	0.85	0.72	0.58	1.00	0.87	**0.74**	0.60	1.00	0.89	0.76	0.62	1.00	1.00	0.81	0.67
		ΔT	27	25	22	18	27	25	22	18	27	26	22	18	27	25	**22**	18	27	25	22	18	28	26	23	19
		kW	1.73	1.73	1.72	1.74	1.92	1.92	1.91	1.93	2.13	2.13	2.12	2.14	2.36	2.35	**2.35**	2.36	2.61	2.61	2.60	2.62	2.91	2.91	2.90	2.92
		Amps	6.6	6.6	6.6	6.7	7.5	7.5	7.5	7.5	8.5	8.4	8.4	8.5	9.5	9.5	**9.5**	9.5	10.7	10.7	10.6	10.7	12.0	12.0	12.0	12.1
		HI PR	242	243	245	249	280	281	283	287	320	321	323	327	362	363	**365**	369	408	409	411	415	458	459	460	464
		LO PR	118	120	123	128	125	127	130	135	132	133	136	141	137	138	**141**	146	142	143	146	151	148	150	153	158
	1000	MBh	29.6	30.0	30.8	32.1	29.3	29.7	30.6	31.9	28.6	29.0	29.8	31.1	27.3	27.7	28.5	29.8	25.7	26.1	27.0	28.3	24.3	24.7	25.6	26.9
		S/T	0.93	0.86	0.73	0.59	1.00	0.86	0.73	0.59	1.00	0.89	0.76	0.62	1.00	0.91	0.78	0.64	1.00	1.00	0.80	0.66	1.00	1.00	0.85	0.71
		ΔT	26	24	21	17	26	24	21	17	26	24	21	17	26	24	21	17	26	24	20	17	27	25	22	18
		kW	1.74	1.74	1.73	1.75	1.93	1.92	1.92	1.94	2.14	2.14	2.13	2.15	2.36	2.36	2.36	2.37	2.62	2.62	2.61	2.63	2.92	2.92	2.91	2.93
		Amps	6.7	6.7	6.7	6.7	7.5	7.5	7.5	7.6	8.5	8.5	8.5	8.5	9.5	9.5	9.5	9.6	10.7	10.7	10.7	10.8	12.1	12.1	12.1	12.1
		HI PR	245	246	247	252	283	284	285	289	322	323	325	329	365	366	368	372	411	412	414	418	460	461	463	467
		LO PR	121	122	125	130	128	129	132	137	134	135	138	143	139	141	144	149	144	146	149	154	151	152	155	160
	1125	MBh	30.2	30.6	31.5	32.8	30.0	30.4	31.2	32.5	29.2	29.6	30.5	31.8	27.9	28.3	29.2	30.5	26.4	26.8	27.6	28.9	25.0	25.4	26.2	27.5
		S/T	1.00	0.86	0.73	0.59	1.00	0.87	0.74	0.60	1.00	0.90	0.76	0.62	1.00	0.91	0.78	0.64	1.00	1.00	0.80	0.66	1.00	1.00	0.85	0.71
		ΔT	25	23	20	16	25	23	20	16	25	24	20	16	25	23	20	16	25	23	20	16	26	24	21	17
		kW	1.75	1.74	1.74	1.76	1.93	1.93	1.93	1.94	2.15	2.14	2.14	2.15	2.37	2.37	2.37	2.38	2.63	2.63	2.62	2.64	2.93	2.92	2.92	2.94
		Amps	6.7	6.7	6.7	6.8	7.6	7.6	7.6	7.6	8.5	8.5	8.5	8.6	9.6	9.6	9.6	9.6	10.7	10.7	10.7	10.8	12.1	12.1	12.1	12.2
		HI PR	247	248	250	254	285	286	288	292	325	326	327	331	367	368	370	374	413	414	416	420	462	463	465	469
		LO PR	123	125	128	133	130	132	135	140	137	138	141	146	142	143	146	151	147	148	151	156	153	155	158	163
85	870	MBh	29.5	29.9	30.8	32.1	29.3	29.7	30.5	31.8	28.5	28.9	29.8	31.1	27.2	27.6	28.5	29.8	25.7	26.1	26.9	28.2	24.2	24.6	25.5	26.8
		S/T	1.00	0.92	0.79	0.65	1.00	0.93	0.79	0.66	1.00	0.95	0.82	0.68	1.00	1.00	0.84	0.70	1.00	1.00	0.86	0.72	1.00	1.00	0.91	0.77
		ΔT	31	29	26	22	31	29	25	22	31	29	26	22	31	29	25	22	31	29	25	22	32	30	26	23
		kW	1.73	1.73	1.73	1.74	1.92	1.92	1.92	1.93	2.13	2.13	2.13	2.14	2.36	2.36	2.35	2.37	2.61	2.61	2.61	2.62	2.91	2.91	2.91	2.92
		Amps	6.6	6.6	6.6	6.7	7.5	7.5	7.5	7.6	8.5	8.5	8.4	8.5	9.5	9.5	9.5	9.6	10.7	10.7	10.7	10.7	12.0	12.0	12.0	12.1
		HI PR	243	245	246	250	281	282	284	288	321	322	324	328	364	365	366	370	410	411	412	416	459	460	461	466
		LO PR	120	122	125	129	127	129	132	137	133	135	138	143	139	140	143	148	144	145	148	153	150	152	155	160
	1000	MBh	30.1	30.5	31.3	32.6	29.8	30.2	31.1	32.4	29.1	29.5	30.3	31.6	27.8	28.2	29.0	30.3	26.2	26.6	27.5	28.8	24.8	25.2	26.0	27.3
		S/T	1.00	0.96	0.83	0.69	1.00	0.96	0.83	0.69	1.00	1.00	0.86	0.72	1.00	1.00	0.87	0.74	1.00	1.00	0.90	0.76	1.00	1.00	0.95	0.81
		ΔT	30	28	24	21	30	28	24	21	30	28	25	21	30	28	24	21	29	28	24	21	31	29	25	22
		kW	1.74	1.74	1.74	1.75	1.93	1.93	1.93	1.94	2.14	2.14	2.14	2.15	2.37	2.37	2.36	2.38	2.62	2.62	2.62	2.63	2.92	2.92	2.92	2.93
		Amps	6.7	6.7	6.7	6.7	7.6	7.5	7.5	7.6	8.5	8.5	8.5	8.6	9.6	9.6	9.5	9.6	10.7	10.7	10.7	10.8	12.1	12.1	12.1	12.1
		HI PR	246	247	249	253	284	285	286	291	323	324	326	330	366	367	369	373	412	413	415	419	461	462	464	468
		LO PR	122	124	127	132	130	131	134	139	136	137	140	145	141	142	145	150	146	148	150	155	153	154	157	162
	1125	MBh	30.7	31.1	32.0	33.3	30.4	30.9	31.7	33.0	29.7	30.1	31.0	32.3	28.4	28.8	29.7	31.0	26.9	27.3	28.1	29.4	25.4	25.8	26.7	28.0
		S/T	1.00	0.96	0.83	0.69	1.00	0.97	0.84	0.70	1.00	1.00	0.86	0.72	1.00	1.00	0.88	0.74	1.00	1.00	0.90	0.76	1.00	1.00	1.00	0.81
		ΔT	29	27	23	20	29	27	23	20	29	27	24	20	29	27	23	20	29	27	23	20	30	28	24	21
		kW	1.75	1.75	1.74	1.76	1.94	1.94	1.93	1.95	2.15	2.15	2.14	2.16	2.38	2.37	2.37	2.39	2.63	2.63	2.63	2.64	2.93	2.93	2.92	2.94
		Amps	6.7	6.7	6.7	6.8	7.6	7.6	7.6	7.6	8.6	8.5	8.5	8.6	9.6	9.6	9.6	9.6	10.8	10.8	10.7	10.8	12.1	12.1	12.1	12.2
		HI PR	248	249	251	255	286	287	289	293	326	327	328	333	368	369	371	375	414	415	417	421	463	464	466	470
		LO PR	125	126	129	134	132	134	136	141	138	140	143	148	144	145	148	153	149	150	153	158	155	157	159	164

IDB: Entering Indoor Dry Bulb Temperature

High and low pressures are measured at the liquid and suction service valves.

Shaded area reflects AHRI Rating Conditions.

kW = Total system power

Amps = Outdoor unit amps (compressor + fan)

			OUTDOOR AMBIENT TEMPERATURE																							
			65ºF				75ºF				85ºF				95ºF				105ºF				115ºF			
			ENTERING INDOOR WET BULB TEMPERATURE																							
IDB	AIRFLOW		59	63	67	71	59	63	67	71	59	63	67	71	59	63	67	71	59	63	67	71	59	63	67	71
70	1070	MBh	36.3	36.8	37.9	-	36.0	36.5	37.5	-	35.0	35.5	36.6	-	33.4	33.9	35.0	-	31.5	32.0	33.0	-	29.7	30.2	31.2	-
		S/T	0.65	0.57	0.44	-	0.66	0.58	0.45	-	0.68	0.61	0.47	-	0.70	0.62	0.49	-	1.00	0.65	0.51	-	1.00	0.70	0.56	-
		ΔT	19	18	14	-	19	17	14	-	20	18	14	-	19	17	14	-	19	17	14	-	20	18	15	-
		kW	2.17	2.17	2.16	-	2.44	2.43	2.43	-	2.73	2.73	2.72	-	3.05	3.05	3.04	-	3.41	3.41	3.40	-	3.83	3.83	3.82	-
		Amps	8.3	8.3	8.2	-	9.5	9.5	9.5	-	10.8	10.8	10.8	-	12.3	12.3	12.3	-	13.9	13.9	13.9	-	15.9	15.9	15.8	-
		HI PR	263	265	266	-	305	306	308	-	348	349	351	-	394	395	397	-	444	446	447	-	498	499	501	-
		LO PR	121	123	126	-	129	130	133	-	135	137	140	-	140	142	145	-	146	147	150	-	152	154	157	-
	1200	MBh	36.8	37.3	38.4	-	36.5	37.0	38.1	-	35.6	36.1	37.2	-	34.0	34.5	35.5	-	32.0	32.5	33.6	-	30.2	30.7	31.8	-
		S/T	0.68	0.61	0.48	-	0.69	0.61	0.48	-	0.71	0.64	0.51	-	0.73	0.66	0.52	-	1.00	0.68	0.55	-	1.00	0.73	0.60	-
		ΔT	18	17	13	-	18	17	13	-	19	17	13	-	18	17	13	-	18	16	13	-	19	17	14	-
		kW	2.18	2.18	2.17	-	2.45	2.44	2.44	-	2.74	2.74	2.74	-	3.06	3.06	3.06	-	3.42	3.42	3.41	-	3.84	3.84	3.83	-
		Amps	8.3	8.3	8.3	-	9.5	9.5	9.5	-	10.9	10.9	10.9	-	12.4	12.4	12.3	-	14.0	14.0	14.0	-	15.9	15.9	15.9	-
		HI PR	266	267	268	-	307	308	310	-	350	351	353	-	396	398	399	-	447	448	450	-	500	501	503	-
		LO PR	123	125	128	-	131	132	135	-	137	138	142	-	142	144	147	-	148	149	152	-	154	156	159	-
	1350	MBh	37.6	38.1	39.2	-	37.3	37.8	38.9	-	36.3	36.8	37.9	-	34.7	35.2	36.3	-	32.8	33.3	34.3	-	31.0	31.5	32.5	-
		S/T	0.69	0.62	0.49	-	0.70	0.62	0.49	-	0.72	0.65	0.52	-	1.00	0.67	0.54	-	1.00	0.69	0.56	-	1.00	0.74	0.61	-
		ΔT	18	16	12	-	17	16	12	-	18	16	12	-	17	16	12	-	17	15	12	-	18	16	13	-
		kW	2.19	2.19	2.19	-	2.46	2.46	2.45	-	2.75	2.75	2.75	-	3.07	3.07	3.07	-	3.43	3.43	3.42	-	3.85	3.85	3.84	-
		Amps	8.4	8.4	8.4	-	9.6	9.6	9.6	-	10.9	10.9	10.9	-	12.4	12.4	12.4	-	14.1	14.0	14.0	-	16.0	16.0	15.9	-
		HI PR	268	269	271	-	309	310	312	-	352	354	355	-	399	400	402	-	449	450	452	-	503	504	505	-
		LO PR	126	127	130	-	133	135	138	-	139	141	144	-	145	146	149	-	150	152	155	-	157	158	161	-
75	1070	MBh	36.3	36.8	37.9	39.5	36.0	36.5	37.6	39.2	35.0	35.6	36.6	38.3	33.4	**33.9**	35.0	36.6	31.5	32.0	33.0	34.7	29.7	30.2	31.3	32.9
		S/T	0.77	0.70	0.57	0.43	0.78	0.71	0.57	0.44	1.00	0.73	0.60	0.46	1.00	**0.75**	0.62	0.48	1.00	0.77	0.64	0.50	1.00	0.82	0.69	0.55
		ΔT	24	22	18	14	24	22	18	14	24	22	18	15	24	**22**	18	14	23	21	18	14	24	23	19	15
		kW	2.17	2.17	2.16	2.18	2.43	2.43	2.43	2.45	2.73	2.73	2.72	2.74	3.05	**3.05**	3.04	3.06	3.41	3.40	3.40	3.42	3.83	3.82	3.82	3.84
		Amps	8.3	8.3	8.2	8.3	9.5	9.5	9.5	9.5	10.8	10.8	10.8	10.9	12.3	**12.3**	12.3	12.4	13.9	13.9	13.9	14.0	15.9	15.8	15.8	15.9
		HI PR	264	265	267	271	305	306	308	312	348	349	351	356	395	**396**	398	402	445	446	448	452	498	499	501	506
		LO PR	121	123	126	131	129	130	133	138	135	137	140	145	141	**142**	145	150	146	147	150	155	152	154	157	162
	1200	MBh	36.9	37.4	38.4	40.1	36.5	37.0	38.1	39.7	35.6	36.1	37.2	38.8	34.0	**34.5**	35.6	37.2	32.0	32.5	33.6	35.2	30.2	30.7	31.8	33.4
		S/T	0.81	0.73	0.60	0.46	0.81	0.74	0.61	0.47	1.00	0.76	0.63	0.49	1.00	**0.78**	0.65	0.51	1.00	0.80	0.67	0.53	1.00	1.00	0.72	0.58
		ΔT	23	21	17	14	23	21	17	13	23	21	17	14	23	**21**	17	13	22	20	17	13	24	22	18	14
		kW	2.18	2.18	2.17	2.19	2.44	2.44	2.44	2.46	2.74	2.74	2.73	2.75	3.06	**3.06**	3.05	3.07	3.42	3.42	3.41	3.43	3.84	3.84	3.83	3.85
		Amps	8.3	8.3	8.3	8.4	9.5	9.5	9.5	9.6	10.9	10.9	10.9	11.0	12.4	**12.3**	12.3	12.4	14.0	14.0	14.0	14.1	15.9	15.9	15.9	16.0
		HI PR	266	267	269	273	307	308	310	314	350	351	353	358	397	**398**	400	404	447	448	450	454	500	501	503	508
		LO PR	123	125	128	133	131	132	135	140	137	138	142	147	142	**144**	147	152	148	149	152	157	154	156	159	164
	1350	MBh	37.6	38.1	39.2	40.8	37.3	37.8	38.9	40.5	36.4	36.9	37.9	39.6	34.8	**35.3**	36.3	38.0	32.8	33.3	34.4	36.0	31.0	31.5	32.6	34.2
		S/T	0.82	0.74	0.61	0.47	0.82	0.75	0.62	0.48	1.00	0.78	0.64	0.50	1.00	**0.79**	0.66	0.52	1.00	0.82	0.68	0.54	1.00	1.00	0.73	0.59
		ΔT	22	20	16	13	22	20	16	13	22	20	16	13	22	**20**	16	13	21	19	16	12	23	21	17	13
		kW	2.19	2.19	2.18	2.20	2.46	2.45	2.45	2.47	2.75	2.75	2.75	2.77	3.07	**3.07**	3.07	3.09	3.43	3.43	3.42	3.44	3.85	3.85	3.84	3.86
		Amps	8.4	8.4	8.3	8.4	9.6	9.6	9.6	9.7	10.9	10.9	10.9	11.0	12.4	**12.4**	12.4	12.5	14.0	14.0	14.0	14.1	16.0	16.0	15.9	16.0
		HI PR	268	269	271	276	309	311	312	317	353	354	356	360	399	**400**	402	407	449	450	452	457	503	504	506	510
		LO PR	126	127	130	135	133	135	138	143	140	141	144	149	145	**146**	149	155	150	152	155	160	157	158	161	166

IDB: Entering Indoor Dry Bulb Temperature

High and low pressures are measured at the liquid and suction service valves.

Shaded area reflects ACCA (TVA) Rating Conditions.

kW = Total system power

Amps = Outdoor unit amps (compressor + fan)

			Outdoor Ambient Temperature																							
			65ºF				75ºF				85ºF				95ºF				105ºF				115ºF			
			Entering Indoor Wet Bulb Temperature																							
IDB	Airflow		59	63	67	71	59	63	67	71	59	63	67	71	59	63	67	71	59	63	67	71	59	63	67	71
80	1070	MBh	36.5	37.0	38.1	39.7	36.2	36.7	37.7	39.4	35.2	35.7	36.8	38.4	33.6	34.1	**35.2**	36.8	31.7	32.2	33.2	34.9	29.9	30.4	31.4	33.1
		S/T	0.90	0.82	0.69	0.55	1.00	0.83	0.70	0.56	1.00	0.85	0.72	0.58	1.00	0.87	**0.74**	0.60	1.00	1.00	0.76	0.62	1.00	1.00	0.81	0.67
		ΔT	28	26	22	19	28	26	22	19	28	26	23	19	28	26	**22**	19	28	26	22	18	29	27	23	20
		kW	2.17	2.17	2.16	2.18	2.43	2.43	2.43	2.45	2.73	2.73	2.72	2.74	3.05	3.05	**3.04**	3.06	3.41	3.41	3.40	3.42	3.83	3.83	3.82	3.84
		Amps	8.3	8.3	8.2	8.3	9.5	9.5	9.5	9.6	10.8	10.8	10.8	10.9	12.3	12.3	**12.3**	12.4	13.9	13.9	13.9	14.0	15.9	15.9	15.8	15.9
		HI PR	264	265	267	272	305	306	308	313	349	350	351	356	395	396	**398**	403	445	446	448	453	499	500	502	506
		LO PR	122	123	127	132	129	131	134	139	136	137	140	145	141	143	**146**	151	146	148	151	156	153	154	157	163
	1200	MBh	37.0	37.5	38.6	40.2	36.7	37.2	38.3	39.9	35.8	36.3	37.4	39.0	34.2	34.7	35.7	37.4	32.2	32.7	33.8	35.4	30.4	30.9	32.0	33.6
		S/T	1.00	0.86	0.72	0.58	1.00	0.86	0.73	0.59	1.00	0.89	0.75	0.61	1.00	0.90	0.77	0.63	1.00	1.00	0.79	0.65	1.00	1.00	0.84	0.71
		ΔT	27	25	21	18	27	25	21	18	27	25	22	18	27	25	21	18	27	25	21	17	28	26	22	19
		kW	2.18	2.18	2.17	2.19	2.45	2.44	2.44	2.46	2.74	2.74	2.74	2.76	3.06	3.06	3.06	3.08	3.42	3.42	3.41	3.43	3.84	3.84	3.83	3.85
		Amps	8.3	8.3	8.3	8.4	9.5	9.5	9.5	9.6	10.9	10.9	10.9	11.0	12.4	12.4	12.3	12.4	14.0	14.0	14.0	14.1	15.9	15.9	15.9	16.0
		HI PR	266	267	269	274	307	309	310	315	351	352	354	358	397	398	400	405	447	448	450	455	501	502	504	508
		LO PR	124	125	128	133	131	133	136	141	138	139	142	147	143	144	147	153	148	150	153	158	155	156	159	164
	1350	MBh	37.8	38.3	39.4	41.0	37.5	38.0	39.1	40.7	36.5	37.1	38.1	39.8	34.9	35.4	36.5	38.1	33.0	33.5	34.5	36.2	31.2	31.7	32.8	34.4
		S/T	1.00	0.87	0.73	0.60	1.00	0.87	0.74	0.60	1.00	0.90	0.77	0.63	1.00	1.00	0.78	0.64	1.00	1.00	0.81	0.67	1.00	1.00	0.86	0.72
		ΔT	26	24	20	17	26	24	20	17	26	24	21	17	26	24	20	17	26	24	20	16	27	25	21	18
		kW	2.19	2.19	2.19	2.21	2.46	2.46	2.45	2.47	2.75	2.75	2.75	2.77	3.07	3.07	3.07	3.09	3.43	3.43	3.42	3.44	3.85	3.85	3.84	3.86
		Amps	8.4	8.4	8.4	8.4	9.6	9.6	9.6	9.7	10.9	10.9	10.9	11.0	12.4	12.4	12.4	12.5	14.0	14.0	14.0	14.1	16.0	16.0	15.9	16.0
		HI PR	269	270	272	276	310	311	313	317	353	354	356	361	400	401	403	407	450	451	453	457	503	504	506	511
		LO PR	126	128	131	136	134	135	138	143	140	142	145	150	145	147	150	155	151	152	155	160	157	159	162	167
85	1070	MBh	37.1	37.6	38.7	40.3	36.8	37.3	38.3	40.0	35.8	36.3	37.4	39.0	34.2	34.7	35.8	37.4	32.3	32.8	33.8	35.5	30.5	31.0	32.0	33.7
		S/T	1.00	0.92	0.79	0.65	1.00	0.93	0.80	0.66	1.00	1.00	0.82	0.68	1.00	1.00	0.84	0.70	1.00	1.00	0.86	0.72	1.00	1.00	1.00	0.77
		ΔT	32	30	26	22	32	30	26	22	32	30	26	23	31	30	26	22	31	29	26	22	32	31	27	23
		kW	2.17	2.17	2.17	2.19	2.44	2.44	2.43	2.45	2.74	2.73	2.73	2.75	3.06	3.05	3.05	3.07	3.41	3.41	3.41	3.43	3.83	3.83	3.83	3.85
		Amps	8.3	8.3	8.3	8.4	9.5	9.5	9.5	9.6	10.9	10.9	10.8	10.9	12.3	12.3	12.3	12.4	14.0	14.0	13.9	14.0	15.9	15.9	15.9	16.0
		HI PR	265	266	268	273	307	308	310	314	350	351	353	357	396	397	399	404	446	448	449	454	500	501	503	507
		LO PR	124	125	128	133	131	133	136	141	137	139	142	147	143	144	147	152	148	150	153	158	155	156	159	164
	1200	MBh	37.6	38.1	39.2	40.8	37.3	37.8	38.9	40.5	36.4	36.9	38.0	39.6	34.8	35.3	36.4	38.0	32.8	33.3	34.4	36.0	31.0	31.5	32.6	34.2
		S/T	1.00	0.95	0.82	0.68	1.00	0.96	0.83	0.69	1.00	1.00	0.85	0.71	1.00	1.00	0.87	0.73	1.00	1.00	0.89	0.75	1.00	1.00	1.00	0.80
		ΔT	31	29	25	21	31	29	25	21	31	29	25	22	31	29	25	21	30	28	25	21	31	30	26	22
		kW	2.19	2.18	2.18	2.20	2.45	2.45	2.44	2.46	2.75	2.74	2.74	2.76	3.07	3.06	3.06	3.08	3.42	3.42	3.42	3.44	3.84	3.84	3.84	3.86
		Amps	8.4	8.3	8.3	8.4	9.6	9.6	9.5	9.6	10.9	10.9	10.9	11.0	12.4	12.4	12.4	12.4	14.0	14.0	14.0	14.1	15.9	15.9	15.9	16.0
		HI PR	267	269	270	275	309	310	312	316	352	353	355	359	398	399	401	406	448	450	451	456	502	503	505	509
		LO PR	126	127	130	135	133	134	137	143	139	141	144	149	145	146	149	154	150	151	155	160	157	158	161	166
	1350	MBh	38.4	38.9	40.0	41.6	38.1	38.6	39.7	41.3	37.2	37.7	38.7	40.4	35.5	36.0	37.1	38.8	33.6	34.1	35.2	36.8	31.8	32.3	33.4	35.0
		S/T	1.00	0.97	0.83	0.69	1.00	1.00	0.84	0.70	1.00	1.00	0.86	0.72	1.00	1.00	0.88	0.74	1.00	1.00	0.90	0.77	1.00	1.00	1.00	0.82
		ΔT	30	28	24	21	30	28	24	20	30	28	24	21	30	28	24	20	29	27	24	20	31	29	25	21
		kW	2.20	2.20	2.19	2.21	2.46	2.46	2.46	2.48	2.76	2.76	2.75	2.77	3.08	3.08	3.07	3.09	3.44	3.43	3.43	3.45	3.86	3.85	3.85	3.87
		Amps	8.4	8.4	8.4	8.5	9.6	9.6	9.6	9.7	11.0	11.0	10.9	11.0	12.4	12.4	12.4	12.5	14.1	14.1	14.0	14.1	16.0	16.0	16.0	16.1
		HI PR	270	271	273	277	311	312	314	319	354	355	357	362	401	402	404	408	451	452	454	458	504	506	507	512
		LO PR	128	130	133	138	135	137	140	145	142	143	146	151	147	149	152	157	153	154	157	162	159	161	164	169

IDB: Entering Indoor Dry Bulb Temperature

High and low pressures are measured at the liquid and suction service valves.

Shaded area reflects AHRI Rating Conditions.

kW = Total system power

Amps = Outdoor unit amps (compressor + fan)

Expanded Cooling Data — GSZ140361L* + ARUF37C14** + TXV

			Outdoor Ambient Temperature																							
			65ºF				75ºF				85ºF				95ºF				105ºF				115ºF			
			Entering Indoor Wet Bulb Temperature																							
IDB	Airflow		59	63	67	71	59	63	67	71	59	63	67	71	59	63	67	71	59	63	67	71	59	63	67	71
70	1050	MBh	33.4	33.9	34.8	-	33.1	33.6	34.6	-	32.2	32.7	33.7	-	30.8	31.2	32.2	-	28.9	29.4	30.4	-	27.3	27.8	28.7	-
		S/T	0.67	0.59	0.46	-	0.67	0.60	0.46	-	0.70	0.62	0.49	-	0.72	0.64	0.51	-	1.00	0.67	0.53	-	1.00	0.72	0.58	-
		ΔT	20	18	14	-	20	18	14	-	20	18	14	-	20	18	14	-	19	17	14	-	21	19	15	-
		kW	2.06	2.06	2.06	-	2.30	2.30	2.29	-	2.56	2.56	2.55	-	2.84	2.84	2.84	-	3.16	3.16	3.16	-	3.54	3.53	3.53	-
		Amps	7.7	7.7	7.7	-	8.8	8.8	8.7	-	10.0	10.0	9.9	-	11.3	11.3	11.2	-	12.7	12.7	12.7	-	14.4	14.4	14.4	-
		HI PR	266	267	269	-	307	308	310	-	351	352	354	-	398	399	401	-	448	449	451	-	502	503	505	-
		LO PR	123	124	127	-	130	132	135	-	137	138	141	-	142	144	147	-	147	149	152	-	154	156	159	-
	1200	MBh	34.0	34.5	35.4	-	33.7	34.2	35.2	-	32.8	33.3	34.3	-	31.4	31.8	32.8	-	29.6	30.0	31.0	-	27.9	28.4	29.4	-
		S/T	0.71	0.63	0.49	-	0.71	0.64	0.50	-	0.74	0.66	0.52	-	1.00	0.68	0.54	-	1.00	0.70	0.57	-	1.00	0.75	0.62	-
		ΔT	19	17	13	-	19	17	13	-	19	17	13	-	19	17	13	-	18	16	13	-	20	18	14	-
		kW	2.07	2.07	2.07	-	2.31	2.31	2.30	-	2.57	2.57	2.57	-	2.86	2.85	2.85	-	3.17	3.17	3.17	-	3.55	3.55	3.54	-
		Amps	7.7	7.7	7.7	-	8.8	8.8	8.8	-	10.0	10.0	10.0	-	11.3	11.3	11.3	-	12.8	12.8	12.7	-	14.5	14.5	14.5	-
		HI PR	268	269	271	-	310	311	313	-	353	354	356	-	400	401	403	-	451	452	454	-	505	506	508	-
		LO PR	125	127	130	-	132	134	137	-	139	140	143	-	144	146	149	-	150	151	154	-	156	158	161	-
	1350	MBh	34.7	35.2	36.2	-	34.4	34.9	35.9	-	33.6	34.1	35.0	-	32.1	32.6	33.6	-	30.3	30.8	31.7	-	28.6	29.1	30.1	-
		S/T	0.71	0.64	0.50	-	0.72	0.64	0.51	-	0.74	0.67	0.53	-	1.00	0.69	0.55	-	1.00	0.71	0.57	-	1.00	0.76	0.63	-
		ΔT	18	16	12	-	18	16	12	-	18	16	12	-	18	16	12	-	17	15	12	-	19	17	13	-
		kW	2.08	2.08	2.08	-	2.32	2.32	2.31	-	2.58	2.58	2.58	-	2.87	2.86	2.86	-	3.18	3.18	3.18	-	3.56	3.56	3.55	-
		Amps	7.8	7.8	7.8	-	8.9	8.9	8.8	-	10.1	10.1	10.0	-	11.4	11.4	11.3	-	12.8	12.8	12.8	-	14.5	14.5	14.5	-
		HI PR	271	272	274	-	312	313	315	-	356	357	359	-	403	404	406	-	453	454	456	-	507	508	510	-
		LO PR	128	129	132	-	135	137	140	-	142	143	146	-	147	148	152	-	152	154	157	-	159	161	164	-
75	1050	MBh	33.4	33.9	34.9	36.4	33.1	33.6	34.6	36.1	32.3	32.7	33.7	35.2	30.8	**31.2**	32.2	33.7	29.0	29.4	30.4	31.9	27.3	27.8	28.8	30.3
		S/T	0.80	0.72	0.59	0.44	0.80	0.73	0.59	0.45	1.00	0.75	0.62	0.47	1.00	**0.77**	0.64	0.49	1.00	0.79	0.66	0.52	1.00	1.00	0.71	0.57
		ΔT	24	22	18	15	24	22	18	15	24	22	19	15	24	**22**	18	15	24	22	18	14	25	23	19	16
		kW	2.06	2.06	2.05	2.07	2.30	2.29	2.29	2.31	2.56	2.56	2.55	2.57	2.84	**2.84**	2.84	2.86	3.16	3.16	3.16	3.17	3.53	3.53	3.53	3.55
		Amps	7.7	7.7	7.6	7.7	8.8	8.7	8.7	8.8	10.0	9.9	9.9	10.0	11.3	**11.3**	11.2	11.3	12.7	12.7	12.7	12.8	14.4	14.4	14.4	14.5
		HI PR	266	267	269	273	307	309	310	315	351	352	354	359	398	**399**	401	405	448	449	451	456	502	503	505	510
		LO PR	123	124	127	133	130	132	135	140	137	138	141	146	142	**144**	147	152	147	149	152	157	154	156	159	164
	1200	MBh	34.0	34.5	35.5	37.0	33.7	34.2	35.2	36.7	32.9	33.3	34.3	35.8	31.4	**31.8**	32.8	34.3	29.6	30.0	31.0	32.5	27.9	28.4	29.4	30.9
		S/T	0.83	0.76	0.62	0.48	0.84	0.76	0.63	0.49	1.00	0.79	0.65	0.51	1.00	**0.81**	0.67	0.53	1.00	0.83	0.70	0.55	1.00	1.00	0.75	0.60
		ΔT	23	21	17	14	23	21	17	14	23	21	18	14	23	**21**	17	14	23	21	17	13	24	22	18	14
		kW	2.07	2.07	2.07	2.08	2.31	2.31	2.30	2.32	2.57	2.57	2.56	2.58	2.85	**2.85**	2.85	2.87	3.17	3.17	3.17	3.18	3.55	3.54	3.54	3.56
		Amps	7.7	7.7	7.7	7.8	8.8	8.8	8.8	8.9	10.0	10.0	10.0	10.1	11.3	**11.3**	11.3	11.4	12.8	12.8	12.7	12.8	14.5	14.5	14.4	14.5
		HI PR	268	269	271	276	310	311	313	317	353	355	356	361	400	**401**	403	408	451	452	454	458	505	506	508	512
		LO PR	125	127	130	135	132	134	137	142	139	140	144	149	144	**146**	149	154	150	151	154	159	156	158	161	166
	1350	MBh	34.8	35.2	36.2	37.7	34.5	34.9	35.9	37.4	33.6	34.1	35.1	36.6	32.1	**32.6**	33.6	35.1	30.3	30.8	31.8	33.3	28.7	29.1	30.1	31.6
		S/T	0.84	0.77	0.63	0.49	1.00	0.77	0.64	0.49	1.00	0.80	0.66	0.52	1.00	**0.82**	0.68	0.54	1.00	0.84	0.70	0.56	1.00	1.00	0.75	0.61
		ΔT	22	20	16	13	22	20	16	13	22	20	17	13	22	**20**	16	13	22	20	16	12	23	21	17	14
		kW	2.08	2.08	2.08	2.09	2.32	2.32	2.31	2.33	2.58	2.58	2.57	2.59	2.87	**2.86**	2.86	2.88	3.18	3.18	3.18	3.20	3.56	3.55	3.55	3.57
		Amps	7.8	7.8	7.7	7.8	8.9	8.8	8.8	8.9	10.1	10.0	10.0	10.1	11.4	**11.3**	11.3	11.4	12.8	12.8	12.8	12.9	14.5	14.5	14.5	14.6
		HI PR	271	272	274	278	312	314	315	320	356	357	359	364	403	**404**	406	410	453	455	456	461	507	508	510	515
		LO PR	128	129	132	137	135	137	140	145	142	143	146	151	147	**149**	152	157	152	154	157	162	159	161	164	169

IDB: Entering Indoor Dry Bulb Temperature

High and low pressures are measured at the liquid and suction service valves.

Shaded area reflects ACCA (TVA) Rating Conditions.

kW = Total system power

Amps = Outdoor unit amps (compressor + fan)

			Outdoor Ambient Temperature																							
			65ºF				75ºF				85ºF				95ºF				105ºF				115ºF			
			Entering Indoor Wet Bulb Temperature																							
IDB	Airflow		59	63	67	71	59	63	67	71	59	63	67	71	59	63	67	71	59	63	67	71	59	63	67	71
80	1050	MBh	33.6	34.1	35.0	36.5	33.3	33.8	34.7	36.2	32.4	32.9	33.9	35.4	30.9	31.4	**32.4**	33.9	29.1	29.6	30.6	32.1	27.5	28.0	28.9	30.4
		S/T	1.00	0.85	0.71	0.57	1.00	0.85	0.72	0.57	1.00	0.88	0.74	0.60	1.00	0.90	**0.76**	0.62	1.00	1.00	0.78	0.64	1.00	1.00	0.84	0.69
		ΔT	28	26	23	19	28	26	23	19	29	27	23	19	28	26	**23**	19	28	26	22	19	29	27	24	20
		kW	2.06	2.06	2.06	2.07	2.30	2.30	2.29	2.31	2.56	2.56	2.55	2.57	2.84	2.84	**2.84**	2.86	3.16	3.16	3.16	3.17	3.54	3.53	3.53	3.55
		Amps	7.7	7.7	7.7	7.7	8.8	8.8	8.7	8.8	10.0	10.0	9.9	10.0	11.3	11.3	**11.2**	11.3	12.7	12.7	12.7	12.8	14.4	14.4	14.4	14.5
		HI PR	266	267	269	274	308	309	311	315	351	353	354	359	398	399	**401**	406	449	450	452	456	503	504	506	510
		LO PR	123	125	128	133	131	132	135	140	137	139	142	147	143	144	**147**	152	148	149	153	158	155	156	159	164
	1200	MBh	34.2	34.7	35.6	37.1	33.9	34.4	35.3	36.8	33.0	33.5	34.5	36.0	31.6	32.0	33.0	34.5	29.7	30.2	31.2	32.7	28.1	28.6	29.5	31.0
		S/T	1.00	0.88	0.75	0.60	1.00	0.89	0.75	0.61	1.00	0.92	0.78	0.64	1.00	1.00	0.80	0.66	1.00	1.00	0.82	0.68	1.00	1.00	0.87	0.73
		ΔT	27	25	22	18	27	25	22	18	27	25	22	18	27	25	22	18	27	25	21	18	28	26	23	19
		kW	2.07	2.07	2.07	2.09	2.31	2.31	2.30	2.32	2.57	2.57	2.57	2.58	2.86	2.85	2.85	2.87	3.17	3.17	3.17	3.19	3.55	3.55	3.54	3.56
		Amps	7.7	7.7	7.7	7.8	8.8	8.8	8.8	8.9	10.0	10.0	10.0	10.1	11.3	11.3	11.3	11.4	12.8	12.8	12.7	12.8	14.5	14.5	14.5	14.5
		HI PR	269	270	272	276	310	311	313	318	354	355	357	361	401	402	404	408	451	452	454	459	505	506	508	513
		LO PR	126	127	130	135	133	135	138	143	139	141	144	149	145	146	149	155	150	152	155	160	157	158	162	167
	1350	MBh	34.9	35.4	36.4	37.9	34.6	35.1	36.1	37.6	33.8	34.2	35.2	36.7	32.3	32.8	33.7	35.2	30.5	30.9	31.9	33.4	28.8	29.3	30.3	31.8
		S/T	1.00	0.89	0.76	0.61	1.00	0.90	0.76	0.62	1.00	0.92	0.79	0.64	1.00	1.00	0.81	0.66	1.00	1.00	0.83	0.69	1.00	1.00	0.88	0.74
		ΔT	26	24	21	17	26	24	21	17	26	24	21	17	26	24	21	17	26	24	20	17	27	25	22	18
		kW	2.08	2.08	2.08	2.10	2.32	2.32	2.31	2.33	2.58	2.58	2.58	2.59	2.87	2.86	2.86	2.88	3.18	3.18	3.18	3.20	3.56	3.56	3.55	3.57
		Amps	7.8	7.8	7.8	7.8	8.9	8.8	8.8	8.9	10.1	10.1	10.0	10.1	11.4	11.4	11.3	11.4	12.8	12.8	12.8	12.9	14.5	14.5	14.5	14.6
		HI PR	271	273	274	279	313	314	316	321	356	358	359	364	403	404	406	411	454	455	457	461	508	509	511	515
		LO PR	128	130	133	138	136	137	140	145	142	144	147	152	148	149	152	157	153	154	157	163	160	161	164	169
85	1050	MBh	34.1	34.6	35.6	37.1	33.8	34.3	35.3	36.8	33.0	33.5	34.4	35.9	31.5	32.0	33.0	34.5	29.7	30.2	31.1	32.6	28.0	28.5	29.5	31.0
		S/T	1.00	0.95	0.81	0.67	1.00	0.96	0.82	0.68	1.00	1.00	0.84	0.70	1.00	1.00	0.86	0.72	1.00	1.00	0.89	0.74	1.00	1.00	1.00	0.79
		ΔT	32	30	27	23	32	30	26	23	32	30	27	23	32	30	26	23	32	30	26	22	33	31	27	24
		kW	2.07	2.06	2.06	2.08	2.30	2.30	2.30	2.31	2.56	2.56	2.56	2.58	2.85	2.85	2.84	2.86	3.17	3.17	3.16	3.18	3.54	3.54	3.53	3.55
		Amps	7.7	7.7	7.7	7.8	8.8	8.8	8.8	8.8	10.0	10.0	10.0	10.0	11.3	11.3	11.3	11.3	12.7	12.7	12.7	12.8	14.4	14.4	14.4	14.5
		HI PR	268	269	271	275	309	310	312	317	353	354	356	360	400	401	403	407	450	451	453	458	504	505	507	512
		LO PR	125	127	130	135	133	134	137	142	139	141	144	149	144	146	149	154	150	151	154	160	157	158	161	166
	1200	MBh	34.7	35.2	36.2	37.7	34.4	34.9	35.9	37.4	33.6	34.1	35.0	36.5	32.1	32.6	33.6	35.1	30.3	30.8	31.7	33.3	28.6	29.1	30.1	31.6
		S/T	1.00	0.99	0.85	0.71	1.00	1.00	0.86	0.71	1.00	1.00	0.88	0.74	1.00	1.00	0.90	0.76	1.00	1.00	0.92	0.78	1.00	1.00	1.00	0.83
		ΔT	31	29	25	22	31	29	25	22	31	29	26	22	31	29	25	22	31	29	25	21	32	30	26	23
		kW	2.08	2.08	2.07	2.09	2.31	2.31	2.31	2.33	2.58	2.57	2.57	2.59	2.86	2.86	2.85	2.87	3.18	3.18	3.17	3.19	3.55	3.55	3.55	3.56
		Amps	7.8	7.7	7.7	7.8	8.8	8.8	8.8	8.9	10.0	10.0	10.0	10.1	11.3	11.3	11.3	11.4	12.8	12.8	12.8	12.8	14.5	14.5	14.5	14.6
		HI PR	270	271	273	278	312	313	315	319	355	356	358	363	402	403	405	410	453	454	456	460	506	508	509	514
		LO PR	127	129	132	137	135	136	139	145	141	143	146	151	147	148	151	156	152	154	157	162	159	160	163	169
	1350	MBh	35.5	36.0	36.9	38.4	35.2	35.7	36.6	38.1	34.3	34.8	35.8	37.3	32.8	33.3	34.3	35.8	31.0	31.5	32.5	34.0	29.4	29.9	30.8	32.3
		S/T	1.00	0.99	0.86	0.71	1.00	1.00	0.86	0.72	1.00	1.00	0.89	0.75	1.00	1.00	0.91	0.77	1.00	1.00	1.00	0.79	1.00	1.00	1.00	0.84
		ΔT	30	28	24	21	30	28	24	21	30	28	25	21	30	28	24	21	30	28	24	20	31	29	25	22
		kW	2.09	2.09	2.08	2.10	2.32	2.32	2.32	2.34	2.59	2.58	2.58	2.60	2.87	2.87	2.86	2.88	3.19	3.19	3.18	3.20	3.56	3.56	3.56	3.57
		Amps	7.8	7.8	7.8	7.9	8.9	8.9	8.9	8.9	10.1	10.1	10.1	10.1	11.4	11.4	11.4	11.4	12.8	12.8	12.8	12.9	14.5	14.5	14.5	14.6
		HI PR	273	274	276	280	314	315	317	322	358	359	361	365	405	406	408	412	455	456	458	463	509	510	512	517
		LO PR	130	132	135	140	137	139	142	147	144	145	149	154	149	151	154	159	155	156	159	164	161	163	166	171

IDB: Entering Indoor Dry Bulb Temperature

High and low pressures are measured at the liquid and suction service valves.

Shaded area reflects AHRI Rating Conditions.

kW = Total system power

Amps = Outdoor unit amps (compressor + fan)

			Outdoor Ambient Temperature																							
			65ºF				75ºF				85ºF				95ºF				105ºF				115ºF			
			Entering Indoor Wet Bulb Temperature																							
IDB	Airflow		59	63	67	71	59	63	67	71	59	63	67	71	59	63	67	71	59	63	67	71	59	63	67	71
70	985	MBh	34.0	34.5	35.5	-	33.7	34.2	35.2	-	32.8	33.3	34.3	-	31.3	31.8	32.8	-	29.5	30.0	31.0	-	27.8	28.3	29.3	-
		S/T	0.64	0.56	0.43	-	0.64	0.57	0.44	-	0.67	0.59	0.46	-	0.69	0.61	0.48	-	1.00	0.63	0.50	-	1.00	0.68	0.55	-
		ΔT	20	18	14	-	20	18	14	-	20	18	14	-	20	18	14	-	19	17	14	-	21	19	15	-
		kW	2.03	2.03	2.02	-	2.25	2.25	2.25	-	2.50	2.50	2.50	-	2.78	2.77	2.77	-	3.08	3.08	3.07	-	3.44	3.44	3.43	-
		Amps	7.6	7.6	7.6	-	8.7	8.7	8.6	-	9.8	9.8	9.8	-	11.1	11.1	11.0	-	12.5	12.4	12.4	-	14.1	14.1	14.1	-
		Hi PR	250	251	253	-	289	290	292	-	330	331	333	-	374	375	377	-	421	422	424	-	472	473	475	-
		Lo PR	121	123	126	-	129	130	133	-	135	136	139	-	140	142	145	-	146	147	150	-	152	154	157	-
	1200	MBh	35.0	35.5	36.5	-	34.7	35.2	36.2	-	33.8	34.3	35.3	-	32.3	32.8	33.8	-	30.5	31.0	32.0	-	28.8	29.3	30.3	-
		S/T	0.68	0.61	0.48	-	0.69	0.61	0.48	-	0.71	0.64	0.51	-	1.00	0.66	0.53	-	1.00	0.68	0.55	-	1.00	0.73	0.60	-
		ΔT	18	16	13	-	18	16	12	-	18	16	13	-	18	16	12	-	18	16	12	-	19	17	13	-
		kW	2.04	2.04	2.04	-	2.27	2.27	2.26	-	2.52	2.52	2.51	-	2.79	2.79	2.79	-	3.10	3.10	3.09	-	3.45	3.45	3.45	-
		Amps	7.7	7.7	7.7	-	8.7	8.7	8.7	-	9.9	9.9	9.9	-	11.1	11.1	11.1	-	12.5	12.5	12.5	-	14.2	14.2	14.1	-
		Hi PR	253	254	256	-	292	294	295	-	333	334	336	-	377	379	380	-	425	426	428	-	476	477	479	-
		Lo PR	125	126	129	-	132	134	137	-	138	140	143	-	144	145	148	-	149	151	154	-	156	157	160	-
	1350	MBh	35.9	36.4	37.4	-	35.6	36.1	37.1	-	34.7	35.2	36.2	-	33.2	33.7	34.7	-	31.4	31.9	32.9	-	29.7	30.2	31.2	-
		S/T	0.67	0.60	0.47	-	0.68	0.61	0.48	-	0.70	0.63	0.50	-	1.00	0.65	0.52	-	1.00	0.67	0.54	-	1.00	0.72	0.59	-
		ΔT	17	15	12	-	17	15	11	-	17	15	12	-	17	15	11	-	17	15	11	-	18	16	12	-
		kW	2.05	2.05	2.05	-	2.28	2.28	2.27	-	2.53	2.53	2.52	-	2.80	2.80	2.80	-	3.11	3.10	3.10	-	3.46	3.46	3.46	-
		Amps	7.7	7.7	7.7	-	8.8	8.8	8.8	-	9.9	9.9	9.9	-	11.2	11.2	11.2	-	12.6	12.6	12.5	-	14.2	14.2	14.2	-
		Hi PR	256	257	259	-	295	296	298	-	336	337	339	-	380	381	383	-	428	429	430	-	478	479	481	-
		Lo PR	128	129	132	-	135	137	140	-	142	143	146	-	147	148	151	-	152	154	157	-	159	160	163	-
75	985	MBh	34.0	34.5	35.5	37.0	33.7	34.2	35.2	36.7	32.9	33.3	34.3	35.9	31.3	**31.8**	32.8	34.4	29.5	30.0	31.0	32.5	27.8	28.3	29.3	30.8
		S/T	0.76	0.69	0.56	0.42	0.77	0.69	0.56	0.43	1.00	0.72	0.59	0.45	1.00	**0.74**	0.61	0.47	1.00	0.76	0.63	0.49	1.00	0.81	0.68	0.54
		ΔT	24	22	18	15	24	22	18	15	24	22	19	15	24	**22**	18	15	24	22	18	14	25	23	19	16
		kW	2.03	2.02	2.02	2.04	2.25	2.25	2.25	2.26	2.50	2.50	2.50	2.51	2.77	**2.77**	2.77	2.79	3.08	3.08	3.07	3.09	3.44	3.43	3.43	3.45
		Amps	7.6	7.6	7.6	7.7	8.7	8.6	8.6	8.7	9.8	9.8	9.8	9.9	11.1	**11.0**	11.0	11.1	12.4	12.4	12.4	12.5	14.1	14.1	14.1	14.1
		Hi PR	250	251	253	257	289	290	292	296	330	331	333	337	374	**375**	377	381	422	423	424	429	472	473	475	479
		Lo PR	121	123	126	131	129	130	133	138	135	136	139	145	140	**142**	145	150	146	147	150	155	152	154	157	162
	1200	MBh	35.0	35.5	36.5	38.0	34.7	35.2	36.2	37.7	33.9	34.3	35.3	36.9	32.3	32.8	33.8	35.4	30.5	31.0	32.0	33.5	28.8	29.3	30.3	31.8
		S/T	0.80	0.73	0.60	0.46	0.81	0.74	0.61	0.47	1.00	0.76	0.63	0.49	1.00	0.78	0.65	0.51	1.00	0.80	0.67	0.53	1.00	1.00	0.72	0.58
		ΔT	22	20	17	13	22	20	17	13	22	21	17	13	22	20	17	13	22	20	16	13	23	21	18	14
		kW	2.04	2.04	2.04	2.05	2.27	2.27	2.26	2.28	2.52	2.52	2.51	2.53	2.79	2.79	2.79	2.80	3.10	3.09	3.09	3.11	3.45	3.45	3.45	3.46
		Amps	7.7	7.7	7.7	7.8	8.7	8.7	8.7	8.8	9.9	9.9	9.9	9.9	11.1	11.1	11.1	11.2	12.5	12.5	12.5	12.6	14.2	14.1	14.1	14.2
		Hi PR	254	255	256	261	293	294	295	300	334	335	336	341	378	379	380	385	425	426	428	432	476	477	479	483
		Lo PR	125	126	129	134	132	134	137	142	138	140	143	148	144	145	148	153	149	151	154	159	156	157	160	165
	1350	MBh	35.9	36.4	37.4	38.9	35.6	36.1	37.1	38.6	34.8	35.2	36.2	37.8	33.2	33.7	34.7	36.3	31.4	31.9	32.9	34.4	29.7	30.2	31.2	32.7
		S/T	0.80	0.72	0.59	0.46	1.00	0.73	0.60	0.46	1.00	0.75	0.62	0.49	1.00	0.77	0.64	0.51	1.00	0.79	0.66	0.53	1.00	1.00	0.71	0.58
		ΔT	21	19	16	12	21	19	16	12	21	20	16	12	21	19	16	12	21	19	15	12	22	20	17	13
		kW	2.05	2.05	2.05	2.06	2.28	2.28	2.27	2.29	2.53	2.53	2.52	2.54	2.80	2.80	2.80	2.81	3.11	3.10	3.10	3.12	3.46	3.46	3.46	3.47
		Amps	7.7	7.7	7.7	7.8	8.8	8.8	8.7	8.8	9.9	9.9	9.9	10.0	11.2	11.2	11.1	11.2	12.6	12.6	12.5	12.6	14.2	14.2	14.2	14.3
		Hi PR	256	257	259	263	295	296	298	302	336	337	339	343	380	381	383	387	428	429	431	435	479	480	481	486
		Lo PR	128	129	132	138	135	137	140	145	142	143	146	151	147	148	151	157	152	154	157	162	159	160	163	168

IDB: Entering Indoor Dry Bulb Temperature

High and low pressures are measured at the liquid and suction service valves.

Shaded area reflects ACCA (TVA) Rating Conditions.

kW = Total system power

Amps = Outdoor unit amps (compressor + fan)

			Outdoor Ambient Temperature																							
			65ºF				75ºF				85ºF				95ºF				105ºF				115ºF			
			Entering Indoor Wet Bulb Temperature																							
IDB	Airflow		59	63	67	71	59	63	67	71	59	63	67	71	59	63	67	71	59	63	67	71	59	63	67	71
80	985	MBh	34.2	34.7	35.7	37.2	33.9	34.4	35.4	36.9	33.0	33.5	34.5	36.0	31.5	32.0	**33.0**	34.5	29.7	30.2	31.2	32.7	28.0	28.5	29.5	31.0
		S/T	0.88	0.81	0.68	0.54	1.00	0.81	0.68	0.55	1.00	0.84	0.71	0.57	1.00	0.86	**0.73**	0.59	1.00	1.00	0.75	0.61	1.00	1.00	0.80	0.66
		ΔT	28	26	23	19	28	26	23	19	28	26	23	19	28	26	**23**	19	28	26	22	19	29	27	24	20
		kW	2.03	2.02	2.02	2.04	2.25	2.25	2.25	2.26	2.50	2.50	2.50	2.52	2.78	2.77	**2.77**	2.79	3.08	3.08	3.07	3.09	3.44	3.44	3.43	3.45
		Amps	7.6	7.6	7.6	7.7	8.7	8.7	8.6	8.7	9.8	9.8	9.8	9.9	11.1	11.0	**11.0**	11.1	12.4	12.4	12.4	12.5	14.1	14.1	14.1	14.1
		Hi PR	250	252	253	258	290	291	292	297	330	332	333	338	375	376	**377**	382	422	423	425	429	473	474	476	480
		Lo PR	122	123	126	131	129	131	134	139	135	137	140	145	141	142	**145**	150	146	148	151	156	153	154	157	162
	1200	MBh	35.2	35.7	36.7	38.2	34.9	35.4	36.4	37.9	34.0	34.5	35.5	37.0	32.5	33.0	34.0	35.5	30.7	31.1	32.1	33.7	29.0	29.5	30.5	32.0
		S/T	1.00	0.85	0.72	0.58	1.00	0.86	0.73	0.59	1.00	0.88	0.75	0.61	1.00	1.00	0.77	0.63	1.00	1.00	0.79	0.65	1.00	1.00	0.84	0.70
		ΔT	27	25	21	17	26	25	21	17	27	25	21	17	26	25	21	17	26	24	21	17	27	25	22	18
		kW	2.04	2.04	2.04	2.05	2.27	2.27	2.26	2.28	2.52	2.52	2.51	2.53	2.79	2.79	2.79	2.80	3.10	3.09	3.09	3.11	3.45	3.45	3.45	3.47
		Amps	7.7	7.7	7.7	7.8	8.7	8.7	8.7	8.8	9.9	9.9	9.9	9.9	11.1	11.1	11.1	11.2	12.5	12.5	12.5	12.6	14.2	14.1	14.1	14.2
		Hi PR	254	255	257	261	293	294	296	300	334	335	337	341	378	379	381	385	426	427	428	433	476	477	479	484
		Lo PR	125	127	130	135	133	134	137	142	139	141	144	149	144	146	149	154	150	151	154	159	156	158	161	166
	1350	MBh	36.1	36.6	37.6	39.1	35.8	36.3	37.3	38.8	34.9	35.4	36.4	37.9	33.4	33.9	34.9	36.4	31.6	32.0	33.1	34.6	29.9	30.4	31.4	32.9
		S/T	1.00	0.84	0.71	0.58	1.00	0.85	0.72	0.58	1.00	0.87	0.74	0.61	1.00	1.00	0.76	0.63	1.00	1.00	0.78	0.65	1.00	1.00	0.83	0.70
		ΔT	26	24	20	16	25	24	20	16	26	24	20	17	25	24	20	16	25	23	20	16	26	24	21	17
		kW	2.05	2.05	2.05	2.06	2.28	2.28	2.27	2.29	2.53	2.53	2.52	2.54	2.80	2.80	2.80	2.81	3.11	3.10	3.10	3.12	3.46	3.46	3.46	3.47
		Amps	7.7	7.7	7.7	7.8	8.8	8.8	8.8	8.8	9.9	9.9	9.9	10.0	11.2	11.2	11.2	11.2	12.6	12.6	12.5	12.6	14.2	14.2	14.2	14.3
		Hi PR	257	258	260	264	296	297	299	303	337	338	340	344	381	382	384	388	428	429	431	435	479	480	482	486
		Lo PR	128	130	133	138	136	137	140	145	142	144	147	152	147	149	152	157	153	154	157	162	159	161	164	169
85	985	MBh	34.8	35.2	36.3	37.8	34.5	34.9	36.0	37.5	33.6	34.1	35.1	36.6	32.1	32.6	33.6	35.1	30.2	30.7	31.7	33.3	28.6	29.0	30.0	31.6
		S/T	1.00	0.91	0.78	0.64	1.00	0.91	0.78	0.64	1.00	1.00	0.81	0.67	1.00	1.00	0.82	0.69	1.00	1.00	0.85	0.71	1.00	1.00	1.00	0.76
		ΔT	32	30	26	23	32	30	26	23	32	30	27	23	32	30	26	23	32	30	26	22	33	31	27	24
		kW	2.03	2.03	2.03	2.04	2.26	2.25	2.25	2.27	2.51	2.51	2.50	2.52	2.78	2.78	2.77	2.79	3.08	3.08	3.08	3.10	3.44	3.44	3.44	3.45
		Amps	7.6	7.6	7.6	7.7	8.7	8.7	8.7	8.7	9.8	9.8	9.8	9.9	11.1	11.1	11.1	11.1	12.5	12.5	12.4	12.5	14.1	14.1	14.1	14.2
		Hi PR	252	253	254	259	291	292	293	298	332	333	334	339	376	377	379	383	423	424	426	430	474	475	477	481
		Lo PR	124	125	128	133	131	132	135	140	137	139	142	147	143	144	147	152	148	149	152	158	155	156	159	164
	1200	MBh	35.8	36.2	37.2	38.8	35.5	35.9	36.9	38.5	34.6	35.1	36.1	37.6	33.1	33.6	34.6	36.1	31.2	31.7	32.7	34.2	29.6	30.0	31.0	32.6
		S/T	1.00	0.95	0.82	0.68	1.00	1.00	0.82	0.69	1.00	1.00	0.85	0.71	1.00	1.00	0.87	0.73	1.00	1.00	0.89	0.75	1.00	1.00	1.00	0.80
		ΔT	30	28	25	21	30	28	25	21	31	29	25	21	30	28	25	21	30	28	24	21	31	29	26	22
		kW	2.05	2.05	2.04	2.06	2.27	2.27	2.27	2.28	2.52	2.52	2.52	2.54	2.80	2.79	2.79	2.81	3.10	3.10	3.10	3.11	3.46	3.46	3.45	3.47
		Amps	7.7	7.7	7.7	7.8	8.8	8.7	8.7	8.8	9.9	9.9	9.9	10.0	11.2	11.1	11.1	11.2	12.5	12.5	12.5	12.6	14.2	14.2	14.2	14.2
		Hi PR	255	256	258	262	294	295	297	301	335	336	338	342	379	380	382	386	427	428	430	434	478	479	480	485
		Lo PR	127	129	132	137	134	136	139	144	141	142	145	150	146	148	151	156	151	153	156	161	158	160	163	168
	1350	MBh	36.7	37.1	38.1	39.7	36.4	36.8	37.8	39.4	35.5	36.0	37.0	38.5	34.0	34.5	35.5	37.0	32.1	32.6	33.6	35.1	30.5	30.9	31.9	33.5
		S/T	1.00	0.94	0.81	0.67	1.00	1.00	0.82	0.68	1.00	1.00	0.84	0.70	1.00	1.00	0.86	0.72	1.00	1.00	1.00	0.74	1.00	1.00	1.00	0.79
		ΔT	29	27	24	20	29	27	24	20	30	28	24	20	29	27	24	20	29	27	23	20	30	28	25	21
		kW	2.06	2.06	2.05	2.07	2.28	2.28	2.28	2.29	2.53	2.53	2.53	2.55	2.81	2.80	2.80	2.82	3.11	3.11	3.11	3.12	3.47	3.47	3.46	3.48
		Amps	7.8	7.8	7.7	7.8	8.8	8.8	8.8	8.9	10.0	9.9	9.9	10.0	11.2	11.2	11.2	11.2	12.6	12.6	12.6	12.6	14.2	14.2	14.2	14.3
		Hi PR	258	259	261	265	297	298	300	304	338	339	341	345	382	383	385	389	430	431	432	437	480	481	483	487
		Lo PR	130	132	135	140	137	139	142	147	144	145	148	153	149	151	154	159	155	156	159	164	161	163	166	171

IDB: Entering Indoor Dry Bulb Temperature

High and low pressures are measured at the liquid and suction service valves.

Shaded area reflects AHRI Rating Conditions.

kW = Total system power

Amps = Outdoor unit amps (compressor + fan)

Expanded Cooling Data — GSZ140421K* + ARUF43C14** + TXV

			Outdoor Ambient Temperature																							
			65ºF				75ºF				85ºF				95ºF				105ºF				115ºF			
			Entering Indoor Wet Bulb Temperature																							
IDB	Airflow		59	63	67	71	59	63	67	71	59	63	67	71	59	63	67	71	59	63	67	71	59	63	67	71
70	1300	MBh	40.2	40.8	41.9	-	39.8	40.4	41.6	-	38.8	39.4	40.6	-	37.0	37.6	38.8	-	34.8	35.4	36.6	-	32.9	33.4	34.6	-
		S/T	0.66	0.59	0.45	-	0.67	0.59	0.46	-	0.69	0.62	0.48	-	1.00	0.64	0.50	-	1.00	0.66	0.52	-	1.00	0.71	0.58	-
		ΔT	18	17	13	-	18	16	13	-	19	17	13	-	18	16	13	-	18	16	13	-	19	17	14	-
		kW	2.44	2.44	2.44	-	2.72	2.72	2.72	-	3.03	3.03	3.03	-	3.37	3.37	3.36	-	3.74	3.74	3.73	-	4.18	4.18	4.17	-
		Amps	9.0	9.0	8.9	-	10.2	10.2	10.2	-	11.7	11.6	11.6	-	13.2	13.2	13.2	-	14.9	14.9	14.9	-	16.9	16.9	16.9	-
		HI PR	254	255	257	-	294	295	297	-	335	337	338	-	380	381	383	-	429	430	431	-	480	481	483	-
		LO PR	124	125	129	-	131	133	136	-	138	139	143	-	143	145	148	-	149	150	153	-	156	157	160	-
	1400	MBh	40.6	41.1	42.3	-	40.2	40.8	42.0	-	39.2	39.7	40.9	-	37.4	38.0	39.1	-	35.2	35.8	37.0	-	33.2	33.8	35.0	-
		S/T	0.69	0.61	0.48	-	0.69	0.62	0.48	-	0.72	0.64	0.51	-	1.00	0.66	0.53	-	1.00	0.68	0.55	-	1.00	0.73	0.60	-
		ΔT	18	16	13	-	18	16	13	-	18	16	13	-	18	16	13	-	17	16	12	-	19	17	13	-
		kW	2.45	2.45	2.45	-	2.73	2.73	2.72	-	3.04	3.04	3.03	-	3.37	3.37	3.37	-	3.75	3.75	3.74	-	4.19	4.19	4.18	-
		Amps	9.0	9.0	9.0	-	10.3	10.3	10.2	-	11.7	11.7	11.7	-	13.2	13.2	13.2	-	14.9	14.9	14.9	-	17.0	16.9	16.9	-
		HI PR	255	256	258	-	295	296	298	-	337	338	340	-	382	383	384	-	430	431	433	-	481	483	484	-
		LO PR	125	127	130	-	133	134	137	-	139	141	144	-	145	146	149	-	150	152	155	-	157	158	161	-
	1575	MBh	41.3	41.9	43.1	-	41.0	41.5	42.7	-	39.9	40.5	41.7	-	38.2	38.7	39.9	-	36.0	36.5	37.7	-	34.0	34.6	35.7	-
		S/T	0.71	0.63	0.50	-	0.71	0.64	0.50	-	0.74	0.66	0.53	-	1.00	0.68	0.55	-	1.00	0.70	0.57	-	1.00	0.75	0.62	-
		ΔT	17	15	12	-	17	15	12	-	17	15	12	-	17	15	12	-	17	15	11	-	18	16	13	-
		kW	2.46	2.46	2.46	-	2.74	2.74	2.74	-	3.05	3.05	3.04	-	3.39	3.38	3.38	-	3.76	3.76	3.75	-	4.20	4.20	4.19	-
		Amps	9.1	9.0	9.0	-	10.3	10.3	10.3	-	11.7	11.7	11.7	-	13.3	13.3	13.2	-	15.0	15.0	15.0	-	17.0	17.0	17.0	-
		HI PR	258	259	260	-	297	298	300	-	339	340	342	-	384	385	387	-	432	433	435	-	484	485	487	-
		LO PR	127	129	132	-	135	136	140	-	141	143	146	-	147	148	152	-	152	154	157	-	159	161	164	-
75	1300	MBh	40.2	40.8	42.0	43.8	39.9	40.4	41.6	43.4	38.8	39.4	40.6	42.4	37.0	**37.6**	38.8	40.6	34.9	35.4	36.6	38.4	32.9	33.4	34.6	36.4
		S/T	0.79	0.72	0.58	0.44	0.80	0.72	0.59	0.44	1.00	0.75	0.61	0.47	1.00	**0.77**	0.63	0.49	1.00	0.79	0.65	0.51	1.00	1.00	0.70	0.56
		ΔT	22	20	17	14	22	20	17	14	22	21	17	14	22	**20**	17	14	22	20	17	13	23	21	18	14
		kW	2.44	2.44	2.44	2.46	2.72	2.72	2.71	2.73	3.03	3.03	3.02	3.04	3.37	**3.36**	3.36	3.38	3.74	3.74	3.73	3.75	4.18	4.18	4.17	4.19
		Amps	9.0	9.0	8.9	9.0	10.2	10.2	10.2	10.3	11.6	11.6	11.6	11.7	13.2	**13.2**	13.2	13.2	14.9	14.9	14.9	15.0	16.9	16.9	16.9	17.0
		HI PR	254	255	257	261	294	295	297	301	336	337	338	343	380	**382**	383	388	429	430	432	436	480	481	483	488
		LO PR	124	126	129	134	131	133	136	141	138	139	143	148	143	**145**	148	153	149	150	153	159	156	157	160	165
	1400	MBh	40.6	41.2	42.3	44.2	40.2	40.8	42.0	43.8	39.2	39.8	40.9	42.8	37.4	**38.0**	39.2	41.0	35.2	35.8	37.0	38.8	33.3	33.8	35.0	36.8
		S/T	0.82	0.74	0.60	0.46	0.82	0.75	0.61	0.47	1.00	0.77	0.64	0.49	1.00	**0.79**	0.65	0.51	1.00	0.81	0.68	0.53	1.00	1.00	0.73	0.59
		ΔT	22	20	17	13	22	20	16	13	22	20	17	13	22	**20**	16	13	21	20	16	13	22	21	17	14
		kW	2.45	2.45	2.44	2.47	2.73	2.73	2.72	2.74	3.04	3.04	3.03	3.05	3.37	**3.37**	3.37	3.39	3.75	3.75	3.74	3.76	4.19	4.18	4.18	4.20
		Amps	9.0	9.0	9.0	9.1	10.3	10.3	10.2	10.3	11.7	11.7	11.7	11.7	13.2	**13.2**	13.2	13.3	14.9	14.9	14.9	15.0	16.9	16.9	16.9	17.0
		HI PR	256	257	258	263	295	296	298	303	337	338	340	344	382	**383**	385	389	430	431	433	437	482	483	485	489
		LO PR	125	127	130	135	133	134	137	142	139	141	144	149	145	**146**	149	154	150	152	155	160	157	158	161	167
	1575	MBh	41.4	41.9	43.1	44.9	41.0	41.6	42.7	44.6	40.0	40.5	41.7	43.5	38.2	**38.7**	39.9	41.7	36.0	36.6	37.7	39.6	34.0	34.6	35.8	37.6
		S/T	0.84	0.76	0.62	0.48	1.00	0.77	0.63	0.49	1.00	0.79	0.66	0.51	1.00	**0.81**	0.68	0.53	1.00	0.83	0.70	0.55	1.00	1.00	0.75	0.61
		ΔT	21	19	16	12	21	19	16	12	21	19	16	12	21	**19**	16	12	20	19	15	12	22	20	16	13
		kW	2.46	2.46	2.46	2.48	2.74	2.74	2.73	2.75	3.05	3.05	3.04	3.06	3.39	**3.38**	3.38	3.40	3.76	3.76	3.75	3.77	4.20	4.20	4.19	4.21
		Amps	9.1	9.0	9.0	9.1	10.3	10.3	10.3	10.4	11.7	11.7	11.7	11.8	13.3	**13.3**	13.2	13.3	15.0	15.0	15.0	15.1	17.0	17.0	17.0	17.1
		HI PR	258	259	261	265	298	299	300	305	339	340	342	346	384	**385**	387	391	432	433	435	440	484	485	487	491
		LO PR	128	129	132	137	135	136	140	145	141	143	146	151	147	**148**	152	157	152	154	157	162	159	161	164	169

IDB: Entering Indoor Dry Bulb Temperature

High and low pressures are measured at the liquid and suction service valves.

Shaded area reflects ACCA (TVA) Rating Conditions.

kW = Total system power

Amps = Outdoor unit amps (compressor + fan)

			Outdoor Ambient Temperature																							
			65ºF				75ºF				85ºF				95ºF				105ºF				115ºF			
			Entering Indoor Wet Bulb Temperature																							
IDB	Airflow		59	63	67	71	59	63	67	71	59	63	67	71	59	63	67	71	59	63	67	71	59	63	67	71
80	1300	MBh	40.4	41.0	42.2	44.0	40.1	40.6	41.8	43.6	39.0	39.6	40.8	42.6	37.3	37.8	**39.0**	40.8	35.1	35.6	36.8	38.6	33.1	33.6	34.8	36.6
		S/T	1.00	0.84	0.71	0.56	1.00	0.85	0.71	0.57	1.00	0.87	0.74	0.59	1.00	1.00	**0.76**	0.61	1.00	1.00	0.78	0.64	1.00	1.00	0.83	0.69
		ΔT	26	24	21	18	26	24	21	18	26	25	21	18	26	24	**21**	18	26	24	21	17	27	25	22	18
		kW	2.44	2.44	2.44	2.46	2.72	2.72	2.72	2.74	3.03	3.03	3.02	3.05	3.37	3.36	**3.36**	3.38	3.74	3.74	3.73	3.76	4.18	4.18	4.17	4.20
		Amps	9.0	9.0	8.9	9.0	10.2	10.2	10.2	10.3	11.7	11.6	11.6	11.7	13.2	13.2	**13.2**	13.3	14.9	14.9	14.9	15.0	16.9	16.9	16.9	17.0
		HI PR	255	256	258	262	294	296	297	302	336	337	339	343	381	382	**384**	388	429	430	432	437	481	482	484	488
		LO PR	125	126	129	134	132	133	137	142	138	140	143	148	144	145	**149**	154	149	151	154	159	156	158	161	166
	1400	MBh	40.8	41.4	42.5	44.4	40.4	41.0	42.2	44.0	39.4	40.0	41.2	43.0	37.6	38.2	39.4	41.2	35.4	36.0	37.2	39.0	33.5	34.0	35.2	37.0
		S/T	1.00	0.86	0.73	0.59	1.00	0.87	0.74	0.59	1.00	0.90	0.76	0.62	1.00	1.00	0.78	0.64	1.00	1.00	0.80	0.66	1.00	1.00	0.85	0.71
		ΔT	26	24	21	17	26	24	20	17	26	24	21	17	26	24	20	17	25	24	20	17	26	25	21	18
		kW	2.45	2.45	2.45	2.47	2.73	2.73	2.72	2.74	3.04	3.04	3.03	3.05	3.37	3.37	3.37	3.39	3.75	3.75	3.74	3.76	4.19	4.19	4.18	4.20
		Amps	9.0	9.0	9.0	9.1	10.3	10.3	10.2	10.3	11.7	11.7	11.7	11.8	13.2	13.2	13.2	13.3	14.9	14.9	14.9	15.0	16.9	16.9	16.9	17.0
		HI PR	256	257	259	263	296	297	299	303	337	338	340	345	382	383	385	389	431	432	433	438	482	483	485	489
		LO PR	126	127	130	136	133	135	138	143	140	141	144	150	145	147	150	155	151	152	155	160	157	159	162	167
	1575	MBh	41.6	42.1	43.3	45.1	41.2	41.8	43.0	44.8	40.2	40.7	41.9	43.7	38.4	38.9	40.1	41.9	36.2	36.8	38.0	39.8	34.2	34.8	36.0	37.8
		S/T	1.00	0.88	0.75	0.61	1.00	0.89	0.76	0.61	1.00	0.92	0.78	0.64	1.00	1.00	0.80	0.66	1.00	1.00	0.82	0.68	1.00	1.00	0.87	0.73
		ΔT	25	23	20	16	25	23	20	16	25	23	20	16	25	23	20	16	24	23	19	16	26	24	20	17
		kW	2.46	2.46	2.46	2.48	2.74	2.74	2.73	2.76	3.05	3.05	3.04	3.07	3.39	3.38	3.38	3.40	3.76	3.76	3.75	3.78	4.20	4.20	4.19	4.21
		Amps	9.1	9.0	9.0	9.1	10.3	10.3	10.3	10.4	11.7	11.7	11.7	11.8	13.3	13.3	13.2	13.3	15.0	15.0	15.0	15.1	17.0	17.0	17.0	17.1
		HI PR	258	259	261	266	298	299	301	305	340	341	342	347	384	386	387	392	433	434	436	440	484	485	487	492
		LO PR	128	130	133	138	135	137	140	145	142	144	147	152	148	149	152	157	153	154	158	163	160	161	164	169
85	1300	MBh	41.1	41.7	42.8	44.7	40.7	41.3	42.5	44.3	39.7	40.3	41.5	43.3	37.9	38.5	39.7	41.5	35.7	36.3	37.5	39.3	33.8	34.3	35.5	37.3
		S/T	1.00	0.94	0.81	0.66	1.00	0.95	0.81	0.67	1.00	1.00	0.84	0.70	1.00	1.00	0.86	0.71	1.00	1.00	0.88	0.74	1.00	1.00	1.00	0.79
		ΔT	30	28	25	21	30	28	25	21	30	28	25	21	30	28	25	21	29	28	24	21	31	29	25	22
		kW	2.45	2.45	2.44	2.46	2.73	2.73	2.72	2.74	3.04	3.03	3.03	3.05	3.37	3.37	3.37	3.39	3.75	3.74	3.74	3.76	4.19	4.18	4.18	4.20
		Amps	9.0	9.0	9.0	9.1	10.3	10.3	10.2	10.3	11.7	11.7	11.6	11.7	13.2	13.2	13.2	13.3	14.9	14.9	14.9	15.0	16.9	16.9	16.9	17.0
		HI PR	256	257	259	263	296	297	299	303	337	338	340	345	382	383	385	389	430	432	433	438	482	483	485	489
		LO PR	126	128	131	136	134	135	138	144	140	142	145	150	146	147	150	156	151	153	156	161	158	159	163	168
	1400	MBh	41.5	42.0	43.2	45.0	41.1	41.7	42.9	44.7	40.1	40.6	41.8	43.6	38.3	38.9	40.0	41.9	36.1	36.7	37.9	39.7	34.1	34.7	35.9	37.7
		S/T	1.00	0.97	0.83	0.69	1.00	1.00	0.84	0.69	1.00	1.00	0.86	0.72	1.00	1.00	0.88	0.74	1.00	1.00	0.90	0.76	1.00	1.00	1.00	0.81
		ΔT	29	27	24	21	29	27	24	21	29	28	24	21	29	27	24	20	29	27	24	20	30	28	25	21
		kW	2.46	2.46	2.45	2.47	2.74	2.73	2.73	2.75	3.04	3.04	3.04	3.06	3.38	3.38	3.37	3.39	3.75	3.75	3.75	3.77	4.19	4.19	4.19	4.21
		Amps	9.0	9.0	9.0	9.1	10.3	10.3	10.3	10.4	11.7	11.7	11.7	11.8	13.2	13.2	13.2	13.3	15.0	15.0	14.9	15.0	17.0	17.0	16.9	17.0
		HI PR	257	258	260	264	297	298	300	304	339	340	341	346	383	384	386	391	432	433	435	439	483	484	486	491
		LO PR	128	129	132	137	135	137	140	145	142	143	146	151	147	149	152	157	152	154	157	162	159	161	164	169
	1575	MBh	42.2	42.8	44.0	45.8	41.9	42.4	43.6	45.4	40.8	41.4	42.6	44.4	39.1	39.6	40.8	42.6	36.9	37.4	38.6	40.4	34.9	35.4	36.6	38.4
		S/T	1.00	0.99	0.85	0.71	1.00	1.00	0.86	0.71	1.00	1.00	0.88	0.74	1.00	1.00	0.90	0.76	1.00	1.00	1.00	0.78	1.00	1.00	1.00	0.83
		ΔT	28	26	23	20	28	26	23	20	28	27	23	20	28	26	23	20	28	26	23	19	29	27	24	20
		kW	2.47	2.47	2.46	2.48	2.75	2.74	2.74	2.76	3.06	3.05	3.05	3.07	3.39	3.39	3.38	3.41	3.77	3.76	3.76	3.78	4.21	4.20	4.20	4.22
		Amps	9.1	9.1	9.1	9.1	10.4	10.3	10.3	10.4	11.8	11.8	11.7	11.8	13.3	13.3	13.3	13.4	15.0	15.0	15.0	15.1	17.0	17.0	17.0	17.1
		HI PR	259	261	262	267	299	300	302	306	341	342	344	348	386	387	389	393	434	435	437	441	486	487	488	493
		LO PR	130	131	135	140	137	139	142	147	144	145	148	154	149	151	154	159	155	156	159	165	162	163	166	171

IDB: Entering Indoor Dry Bulb Temperature

High and low pressures are measured at the liquid and suction service valves.

Shaded area reflects AHRI Rating Conditions.

kW = Total system power

Amps = Outdoor unit amps (compressor + fan)

			Outdoor Ambient Temperature																							
			65ºF				75ºF				85ºF				95ºF				105ºF				115ºF			
			Entering Indoor Wet Bulb Temperature																							
IDB	Airflow		59	63	67	71	59	63	67	71	59	63	67	71	59	63	67	71	59	63	67	71	59	63	67	71
70	1400	MBh	45.9	46.5	47.9	-	45.5	46.1	47.5	-	44.3	44.9	46.3	-	42.2	42.9	44.2	-	39.7	40.4	41.7	-	37.4	38.1	39.4	-
		S/T	0.64	0.56	0.42	-	0.65	0.57	0.43	-	0.67	0.59	0.45	-	0.69	0.61	0.47	-	1.00	0.64	0.50	-	1.00	0.69	0.55	-
		ΔT	19	17	14	-	19	17	14	-	19	17	14	-	19	17	14	-	19	17	14	-	20	18	15	-
		kW	2.79	2.78	2.78	-	3.11	3.10	3.10	-	3.46	3.46	3.46	-	3.85	3.85	3.84	-	4.28	4.28	4.28	-	4.79	4.79	4.78	-
		Amps	10.2	10.2	10.2	-	11.7	11.7	11.6	-	13.3	13.3	13.3	-	15.1	15.1	15.0	-	17.1	17.0	17.0	-	19.4	19.4	19.3	-
		HI PR	256	257	259	-	296	297	299	-	338	339	341	-	384	385	387	-	433	434	436	-	485	486	488	-
		LO PR	122	124	127	-	130	131	134	-	136	138	141	-	142	143	146	-	147	149	152	-	154	156	159	-
	1560	MBh	46.4	47.0	48.4	-	46.0	46.6	48.0	-	44.8	45.4	46.8	-	42.7	43.4	44.7	-	40.2	40.9	42.2	-	37.9	38.6	39.9	-
		S/T	0.69	0.61	0.47	-	0.69	0.62	0.48	-	0.72	0.64	0.50	-	1.00	0.66	0.52	-	1.00	0.69	0.54	-	1.00	0.74	0.60	-
		ΔT	18	16	13	-	18	16	13	-	18	16	13	-	18	16	13	-	18	16	13	-	19	17	14	-
		kW	2.80	2.80	2.79	-	3.12	3.12	3.11	-	3.48	3.48	3.47	-	3.87	3.86	3.86	-	4.30	4.30	4.29	-	4.80	4.80	4.80	-
		Amps	10.3	10.3	10.2	-	11.7	11.7	11.7	-	13.4	13.4	13.3	-	15.1	15.1	15.1	-	17.1	17.1	17.1	-	19.4	19.4	19.4	-
		HI PR	258	259	260	-	298	299	301	-	340	341	343	-	386	387	388	-	435	436	437	-	487	488	490	-
		LO PR	124	125	129	-	131	133	136	-	138	139	142	-	143	145	148	-	149	150	153	-	155	157	160	-
	1800	MBh	47.3	47.9	49.3	-	46.9	47.5	48.9	-	45.7	46.3	47.7	-	43.6	44.3	45.6	-	41.1	41.8	43.1	-	38.8	39.5	40.8	-
		S/T	0.73	0.65	0.51	-	0.73	0.66	0.52	-	0.76	0.68	0.54	-	1.00	0.70	0.56	-	1.00	0.72	0.58	-	1.00	0.78	0.64	-
		ΔT	17	15	12	-	17	15	12	-	17	15	12	-	17	15	12	-	17	15	12	-	18	16	13	-
		kW	2.82	2.81	2.81	-	3.14	3.14	3.13	-	3.50	3.49	3.49	-	3.88	3.88	3.87	-	4.31	4.31	4.31	-	4.82	4.82	4.81	-
		Amps	10.3	10.3	10.3	-	11.8	11.8	11.8	-	13.4	13.4	13.4	-	15.2	15.2	15.2	-	17.2	17.2	17.2	-	19.5	19.5	19.5	-
		HI PR	260	261	263	-	300	302	303	-	343	344	346	-	388	389	391	-	437	438	440	-	489	491	492	-
		LO PR	126	128	131	-	134	135	138	-	140	142	145	-	146	147	150	-	151	153	156	-	158	159	163	-
75	1400	MBh	45.9	46.6	47.9	50.0	45.5	46.1	47.5	49.6	44.3	45.0	46.3	48.4	42.2	42.9	44.3	46.4	39.7	40.4	41.7	43.8	37.4	38.1	39.5	41.5
		S/T	0.77	0.69	0.55	0.41	0.78	0.70	0.56	0.41	1.00	0.73	0.59	0.44	1.00	0.75	0.61	0.46	1.00	0.77	0.63	0.48	1.00	1.00	0.68	0.54
		ΔT	23	21	18	14	23	21	18	14	23	21	18	14	23	21	18	14	22	21	17	14	24	22	19	15
		kW	2.79	2.78	2.78	2.80	3.11	3.10	3.10	3.12	3.46	3.46	3.45	3.48	3.85	3.85	3.84	3.87	4.28	4.28	4.27	4.30	4.79	4.79	4.78	4.81
		Amps	10.2	10.2	10.2	10.3	11.7	11.6	11.6	11.7	13.3	13.3	13.3	13.4	15.1	15.1	15.0	15.1	17.0	17.0	17.0	17.1	19.4	19.4	19.3	19.4
		HI PR	256	257	259	263	296	297	299	304	339	340	341	346	384	385	387	391	433	434	436	440	485	486	488	493
		LO PR	122	124	127	132	130	131	134	140	136	138	141	146	142	143	146	152	147	149	152	157	154	156	159	164
	1560	MBh	46.4	47.1	48.4	50.5	46.0	46.6	48.0	50.1	44.8	45.5	46.8	48.9	42.7	**43.4**	44.8	46.9	40.2	40.9	42.2	44.3	37.9	38.6	40.0	42.0
		S/T	0.82	0.74	0.60	0.46	0.83	0.75	0.61	0.46	1.00	0.78	0.64	0.49	1.00	**0.80**	0.66	0.51	1.00	0.82	0.68	0.53	1.00	1.00	0.73	0.58
		ΔT	22	20	17	13	22	20	17	13	22	20	17	14	22	**20**	17	13	22	20	17	13	23	21	18	14
		kW	2.80	2.80	2.79	2.81	3.12	3.12	3.11	3.14	3.48	3.47	3.47	3.49	3.86	**3.86**	3.86	3.88	4.30	4.29	4.29	4.31	4.80	4.80	4.79	4.82
		Amps	10.3	10.2	10.2	10.3	11.7	11.7	11.7	11.8	13.4	13.3	13.3	13.4	15.1	**15.1**	15.1	15.2	17.1	17.1	17.1	17.2	19.4	19.4	19.4	19.5
		HI PR	258	259	261	265	298	299	301	305	340	341	343	348	386	**387**	389	393	435	436	438	442	487	488	490	494
		LO PR	124	125	129	134	131	133	136	141	138	139	142	148	143	**145**	148	153	149	150	153	159	156	157	160	165
	1800	MBh	47.3	48.0	49.3	51.4	46.9	47.6	48.9	51.0	45.7	46.4	47.7	49.8	43.7	44.3	45.7	47.8	41.1	41.8	43.2	45.2	38.8	39.5	40.9	43.0
		S/T	0.86	0.78	0.64	0.50	1.00	0.79	0.65	0.50	1.00	0.82	0.68	0.53	1.00	0.84	0.70	0.55	1.00	0.86	0.72	0.57	1.00	1.00	0.77	0.62
		ΔT	21	19	16	12	21	19	16	12	21	19	16	13	21	19	16	12	21	19	15	12	22	20	17	13
		kW	2.82	2.81	2.81	2.83	3.14	3.13	3.13	3.15	3.49	3.49	3.49	3.51	3.88	3.88	3.87	3.90	4.31	4.31	4.30	4.33	4.82	4.82	4.81	4.84
		Amps	10.3	10.3	10.3	10.4	11.8	11.8	11.8	11.9	13.4	13.4	13.4	13.5	15.2	15.2	15.2	15.3	17.2	17.2	17.1	17.3	19.5	19.5	19.5	19.6
		HI PR	260	261	263	268	301	302	304	308	343	344	346	350	388	389	391	396	437	438	440	445	490	491	493	497
		LO PR	126	128	131	136	134	135	138	144	140	142	145	150	146	147	150	156	151	153	156	161	158	159	163	168

IDB: Entering Indoor Dry Bulb Temperature

High and low pressures are measured at the liquid and suction service valves.

Shaded area reflects ACCA (TVA) Rating Conditions.

kW = Total system power

Amps = Outdoor unit amps (compressor + fan)

			Outdoor Ambient Temperature																							
			65ºF				75ºF				85ºF				95ºF				105ºF				115ºF			
			Entering Indoor Wet Bulb Temperature																							
IDB	Airflow		59	63	67	71	59	63	67	71	59	63	67	71	59	63	67	71	59	63	67	71	59	63	67	71
80	1400	MBh	46.1	46.8	48.2	50.2	45.7	46.4	47.8	49.8	44.5	45.2	46.6	48.6	42.5	43.1	44.5	46.6	40.0	40.6	42.0	44.1	37.7	38.3	39.7	41.8
		S/T	1.00	0.82	0.68	0.54	1.00	0.83	0.69	0.54	1.00	0.86	0.72	0.57	1.00	0.88	0.74	0.59	1.00	1.00	0.76	0.61	1.00	1.00	0.81	0.66
		Delta T	27	25	22	18	27	25	22	18	27	25	22	18	27	25	22	18	26	25	21	18	27	26	22	19
		KW	2.79	2.78	2.78	2.80	3.11	3.10	3.10	3.12	3.46	3.46	3.46	3.48	3.85	3.85	3.84	3.87	4.28	4.28	4.28	4.30	4.79	4.79	4.78	4.81
		AMPS	10.2	10.2	10.2	10.3	11.7	11.7	11.6	11.7	13.3	13.3	13.3	13.4	15.1	15.1	15.0	15.1	17.1	17.0	17.0	17.1	19.4	19.4	19.3	19.4
		HI PR	256	258	259	264	297	298	300	304	339	340	342	346	384	386	387	392	433	435	436	441	486	487	489	493
		LO PR	123	124	128	133	130	132	135	140	137	138	142	147	142	144	147	152	148	149	152	158	155	156	159	164
	1560	MBh	46.6	47.3	48.7	50.8	46.2	46.9	48.3	50.3	45.0	45.7	47.1	49.1	43.0	43.6	**45.0**	47.1	40.5	41.1	42.5	44.6	38.2	38.8	40.2	42.3
		S/T	1.00	0.87	0.73	0.59	1.00	0.88	0.74	0.59	1.00	0.91	0.77	0.62	1.00	1.00	**0.79**	0.64	1.00	1.00	0.81	0.66	1.00	1.00	0.86	0.71
		Delta T	26	24	21	17	26	24	21	17	26	24	21	18	26	24	**21**	17	26	24	20	17	27	25	22	18
		KW	2.80	2.80	2.79	2.82	3.12	3.12	3.11	3.14	3.48	3.48	3.47	3.49	3.86	3.86	**3.86**	3.88	4.30	4.29	4.29	4.31	4.80	4.80	4.80	4.82
		AMPS	10.3	10.2	10.2	10.3	11.7	11.7	11.7	11.8	13.4	13.4	13.3	13.4	15.1	15.1	**15.1**	15.2	17.1	17.1	17.1	17.2	19.4	19.4	19.4	19.5
		HI PR	258	259	261	266	299	300	301	306	341	342	344	348	386	387	**389**	394	435	436	438	443	488	489	490	495
		LO PR	124	126	129	134	132	133	136	142	138	140	143	148	144	145	**149**	154	149	151	154	159	156	158	161	166
	1800	MBh	47.6	48.2	49.6	51.7	47.1	47.8	49.2	51.2	46.0	46.6	48.0	50.1	43.9	44.5	45.9	48.0	41.4	42.0	43.4	45.5	39.1	39.7	41.1	43.2
		S/T	1.00	0.91	0.77	0.62	1.00	0.92	0.78	0.63	1.00	0.95	0.80	0.66	1.00	1.00	0.82	0.68	1.00	1.00	0.85	0.70	1.00	1.00	0.90	0.75
		Delta T	25	23	20	16	25	23	20	16	25	23	20	16	25	23	20	16	24	23	19	16	26	24	20	17
		KW	2.82	2.81	2.81	2.83	3.14	3.13	3.13	3.15	3.49	3.49	3.49	3.51	3.88	3.88	3.87	3.90	4.31	4.31	4.31	4.33	4.82	4.82	4.81	4.84
		AMPS	10.3	10.3	10.3	10.4	11.8	11.8	11.8	11.9	13.4	13.4	13.4	13.5	15.2	15.2	15.2	15.3	17.2	17.2	17.2	17.3	19.5	19.5	19.5	19.6
		HI PR	261	262	264	268	301	302	304	308	343	344	346	351	389	390	392	396	438	439	441	445	490	491	493	498
		LO PR	127	128	132	137	134	136	139	144	141	142	145	151	146	148	151	156	152	153	156	162	159	160	163	168
85	1400	MBh	46.9	47.6	48.9	51.0	46.5	47.2	48.5	50.6	45.3	46.0	47.3	49.4	43.3	43.9	45.3	47.4	40.7	41.4	42.8	44.8	38.4	39.1	40.5	42.6
		S/T	1.00	0.93	0.79	0.64	1.00	0.94	0.80	0.65	1.00	1.00	0.82	0.67	1.00	1.00	0.84	0.69	1.00	1.00	0.86	0.72	1.00	1.00	1.00	0.77
		Delta T	30	28	25	22	30	28	25	22	30	29	25	22	30	28	25	22	30	28	25	21	31	29	26	22
		KW	2.79	2.79	2.78	2.81	3.11	3.11	3.11	3.13	3.47	3.47	3.46	3.49	3.86	3.86	3.85	3.87	4.29	4.29	4.28	4.31	4.80	4.79	4.79	4.81
		AMPS	10.2	10.2	10.2	10.3	11.7	11.7	11.7	11.8	13.3	13.3	13.3	13.4	15.1	15.1	15.1	15.2	17.1	17.1	17.0	17.2	19.4	19.4	19.4	19.5
		HI PR	258	259	261	265	298	299	301	305	340	341	343	348	386	387	389	393	435	436	438	442	487	488	490	494
		LO PR	125	126	129	135	132	134	137	142	139	140	143	149	144	146	149	154	150	151	154	159	156	158	161	166
	1560	MBh	47.4	48.1	49.4	51.5	47.0	47.7	49.0	51.1	45.8	46.5	47.8	49.9	43.8	44.4	45.8	47.9	41.2	41.9	43.3	45.3	38.9	39.6	41.0	43.1
		S/T	1.00	0.98	0.84	0.69	1.00	0.98	0.84	0.70	1.00	1.00	0.87	0.72	1.00	1.00	0.89	0.74	1.00	1.00	0.91	0.77	1.00	1.00	1.00	0.82
		Delta T	29	28	24	21	29	27	24	21	30	28	24	21	29	27	24	21	29	27	24	21	30	28	25	22
		KW	2.81	2.80	2.80	2.82	3.13	3.12	3.12	3.14	3.48	3.48	3.48	3.50	3.87	3.87	3.86	3.89	4.30	4.30	4.30	4.32	4.81	4.81	4.80	4.83
		AMPS	10.3	10.3	10.3	10.4	11.8	11.7	11.7	11.8	13.4	13.4	13.4	13.5	15.2	15.2	15.1	15.2	17.1	17.1	17.1	17.2	19.5	19.5	19.4	19.5
		HI PR	259	261	262	267	300	301	303	307	342	343	345	349	387	389	390	395	436	438	439	444	489	490	492	496
		LO PR	126	128	131	136	134	135	138	144	140	142	145	150	146	147	150	156	151	153	156	161	158	159	162	168
	1800	MBh	48.3	49.0	50.3	52.4	47.9	48.6	49.9	52.0	46.7	47.4	48.7	50.8	44.7	45.3	46.7	48.8	42.2	42.8	44.2	46.3	39.9	40.5	41.9	44.0
		S/T	1.00	1.00	0.88	0.73	1.00	1.00	0.88	0.74	1.00	1.00	0.91	0.76	1.00	1.00	0.93	0.78	1.00	1.00	0.95	0.80	1.00	1.00	1.00	0.86
		Delta T	28	26	23	20	28	26	23	20	28	27	23	20	28	26	23	20	28	26	23	19	29	27	24	21
		KW	2.82	2.82	2.82	2.84	3.14	3.14	3.14	3.16	3.50	3.50	3.49	3.52	3.89	3.89	3.88	3.90	4.32	4.32	4.31	4.34	4.83	4.82	4.82	4.84
		AMPS	10.4	10.4	10.3	10.4	11.8	11.8	11.8	11.9	13.5	13.5	13.4	13.5	15.2	15.2	15.2	15.3	17.2	17.2	17.2	17.3	19.5	19.5	19.5	19.6
		HI PR	262	263	265	269	302	303	305	310	345	346	347	352	390	391	393	397	439	440	442	446	491	492	494	499
		LO PR	129	130	133	139	136	138	141	146	143	144	147	153	148	150	153	158	154	155	158	163	160	162	165	170

IDB: Entering Indoor Dry Bulb Temperature

High and low pressures are measured at the liquid and suction service valves.

Shaded area reflects AHRI Rating Conditions.

kW = Total system power

Amps = Outdoor unit amps (compressor + fan)

Expanded Cooling Data — GSZ140491K* + ARUF49C14** + TXV

			Outdoor Ambient Temperature																							
			65ºF				75ºF				85ºF				95ºF				105ºF				115ºF			
			Entering Indoor Wet Bulb Temperature																							
IDB	Airflow		59	63	67	71	59	63	67	71	59	63	67	71	59	63	67	71	59	63	67	71	59	63	67	71
70	1400	MBh	45.9	46.5	47.9	-	45.5	46.1	47.5	-	44.3	44.9	46.3	-	42.2	42.9	44.2	-	39.8	40.4	41.8	-	37.5	38.1	39.5	-
		S/T	0.66	0.59	0.45	-	0.67	0.59	0.46	-	0.69	0.62	0.48	-	0.71	0.64	0.50	-	1.00	0.66	0.52	-	1.00	0.71	0.57	-
		ΔT	19	17	14	-	19	17	14	-	19	17	14	-	19	17	14	-	19	17	13	-	20	18	15	-
		kW	2.69	2.69	2.69	-	3.01	3.01	3.00	-	3.36	3.36	3.35	-	3.74	3.74	3.73	-	4.16	4.16	4.15	-	4.66	4.66	4.65	-
		Amps	9.9	9.9	9.8	-	11.3	11.3	11.3	-	12.9	12.9	12.9	-	14.7	14.6	14.6	-	16.6	16.6	16.6	-	18.9	18.9	18.8	-
		HI PR	249	250	252	-	288	289	290	-	328	330	331	-	372	373	375	-	420	421	423	-	470	471	473	-
		LO PR	121	122	125	-	128	129	132	-	134	136	139	-	140	141	144	-	145	146	149	-	151	153	156	-
	1600	MBh	46.7	47.3	48.7	-	46.3	46.9	48.3	-	45.1	45.7	47.1	-	43.1	43.7	45.1	-	40.6	41.2	42.6	-	38.3	39.0	40.3	-
		S/T	0.70	0.62	0.49	-	0.70	0.63	0.49	-	0.73	0.65	0.52	-	0.75	0.67	0.54	-	1.00	0.69	0.56	-	1.00	0.75	0.61	-
		ΔT	18	16	13	-	18	16	13	-	18	16	13	-	18	16	13	-	18	16	12	-	19	17	13	-
		kW	2.71	2.71	2.70	-	3.02	3.02	3.02	-	3.37	3.37	3.37	-	3.75	3.75	3.75	-	4.18	4.18	4.17	-	4.68	4.67	4.67	-
		Amps	9.9	9.9	9.9	-	11.4	11.4	11.3	-	13.0	13.0	13.0	-	14.7	14.7	14.7	-	16.7	16.7	16.6	-	18.9	18.9	18.9	-
		HI PR	251	252	254	-	290	291	293	-	331	332	334	-	375	376	377	-	422	423	425	-	473	474	475	-
		LO PR	123	124	127	-	130	132	135	-	136	138	141	-	142	143	146	-	147	149	152	-	154	155	158	-
	1800	MBh	47.7	48.4	49.7	-	47.3	47.9	49.3	-	46.1	46.8	48.1	-	44.1	44.7	46.1	-	41.6	42.2	43.6	-	39.3	40.0	41.3	-
		S/T	0.71	0.63	0.50	-	0.71	0.64	0.50	-	0.74	0.66	0.53	-	1.00	0.68	0.55	-	1.00	0.70	0.57	-	1.00	0.75	0.62	-
		ΔT	17	15	12	-	17	15	12	-	17	15	12	-	17	15	12	-	17	15	11	-	18	16	13	-
		kW	2.72	2.72	2.71	-	3.04	3.03	3.03	-	3.39	3.39	3.38	-	3.77	3.77	3.76	-	4.19	4.19	4.18	-	4.69	4.69	4.68	-
		Amps	10.0	10.0	10.0	-	11.4	11.4	11.4	-	13.1	13.0	13.0	-	14.8	14.8	14.8	-	16.7	16.7	16.7	-	19.0	19.0	19.0	-
		HI PR	253	255	256	-	292	293	295	-	333	334	336	-	377	378	380	-	424	426	427	-	475	476	478	-
		LO PR	125	127	130	-	133	134	137	-	139	141	144	-	144	146	149	-	150	151	154	-	156	158	161	-
75	1400	MBh	45.9	46.5	47.9	50.0	45.5	46.1	47.5	49.5	44.3	44.9	46.3	48.4	42.3	**42.9**	44.3	46.3	39.8	40.4	41.8	43.8	37.5	38.2	39.5	41.6
		S/T	0.79	0.71	0.58	0.44	0.80	0.72	0.59	0.44	1.00	0.75	0.61	0.47	1.00	**0.76**	0.63	0.49	1.00	0.79	0.65	0.51	1.00	0.84	0.70	0.56
		ΔT	23	21	18	14	23	21	18	14	23	21	18	14	23	**21**	18	14	23	21	17	14	24	22	19	15
		kW	2.69	2.69	2.68	2.71	3.01	3.00	3.00	3.02	3.36	3.35	3.35	3.37	3.74	**3.73**	3.73	3.75	4.16	4.16	4.15	4.18	4.66	4.66	4.65	4.67
		Amps	9.9	9.9	9.8	9.9	11.3	11.3	11.3	11.4	12.9	12.9	12.9	13.0	14.6	**14.6**	14.6	14.7	16.6	16.6	16.6	16.7	18.9	18.9	18.8	18.9
		HI PR	249	250	252	256	288	289	291	295	329	330	331	336	373	**374**	375	380	420	421	423	427	470	472	473	478
		LO PR	121	122	125	130	128	129	132	137	134	136	139	144	140	**141**	144	149	145	146	149	154	151	153	156	161
	1600	MBh	46.7	47.4	48.7	50.8	46.3	47.0	48.3	50.4	45.1	45.8	47.1	49.2	43.1	**43.7**	45.1	47.2	40.6	41.3	42.6	44.7	38.3	39.0	40.3	42.4
		S/T	0.83	0.75	0.62	0.47	0.83	0.76	0.62	0.48	1.00	0.78	0.65	0.51	1.00	**0.80**	0.67	0.52	1.00	0.82	0.69	0.55	1.00	1.00	0.74	0.60
		ΔT	22	20	17	13	22	20	17	13	22	20	17	13	22	**20**	17	13	22	20	16	13	23	21	18	14
		kW	2.71	2.70	2.70	2.72	3.02	3.02	3.01	3.04	3.37	3.37	3.36	3.39	3.75	**3.75**	3.74	3.77	4.18	4.17	4.17	4.19	4.67	4.67	4.67	4.69
		Amps	9.9	9.9	9.9	10.0	11.4	11.4	11.3	11.4	13.0	13.0	12.9	13.1	14.7	**14.7**	14.7	14.8	16.7	16.6	16.6	16.7	18.9	18.9	18.9	19.0
		HI PR	251	252	254	258	290	291	293	297	331	332	334	338	375	**376**	378	382	422	423	425	429	473	474	476	480
		LO PR	123	124	127	132	130	132	135	140	137	138	141	146	142	**143**	146	151	147	149	152	157	154	155	158	163
	1800	MBh	47.7	48.4	49.7	51.8	47.3	48.0	49.3	51.4	46.2	46.8	48.1	50.2	44.1	**44.8**	46.1	48.2	41.6	42.3	43.6	45.7	39.4	40.0	41.4	43.4
		S/T	0.83	0.76	0.62	0.48	0.84	0.76	0.63	0.49	1.00	0.79	0.65	0.51	1.00	**0.81**	0.67	0.53	1.00	0.83	0.70	0.55	1.00	1.00	0.75	0.61
		ΔT	21	19	16	12	21	19	16	12	21	19	16	12	21	**19**	16	12	21	19	15	12	22	20	17	13
		kW	2.72	2.72	2.71	2.74	3.03	3.03	3.03	3.05	3.39	3.38	3.38	3.40	3.77	**3.76**	3.76	3.78	4.19	4.19	4.18	4.21	4.69	4.69	4.68	4.70
		Amps	10.0	10.0	10.0	10.1	11.4	11.4	11.4	11.5	13.0	13.0	13.0	13.1	14.8	**14.8**	14.7	14.9	16.7	16.7	16.7	16.8	19.0	19.0	19.0	19.1
		HI PR	254	255	257	261	293	294	295	300	333	334	336	341	377	**378**	380	384	425	426	427	432	475	476	478	482
		LO PR	126	127	130	135	133	134	137	142	139	141	144	149	144	**146**	149	154	150	151	154	159	156	158	161	166

IDB: Entering Indoor Dry Bulb Temperature

High and low pressures are measured at the liquid and suction service valves.

Shaded area reflects ACCA (TVA) Rating Conditions.

kW = Total system power

Amps = Outdoor unit amps (compressor + fan)

			Outdoor Ambient Temperature																							
			65ºF				75ºF				85ºF				95ºF				105ºF				115ºF			
			Entering Indoor Wet Bulb Temperature																							
IDB	Airflow		59	63	67	71	59	63	67	71	59	63	67	71	59	63	67	71	59	63	67	71	59	63	67	71
80	1400	MBh	46.1	46.8	48.1	50.2	45.7	46.4	47.7	49.8	44.5	45.2	46.5	48.6	42.5	43.1	**44.5**	46.6	40.0	40.7	42.0	44.1	37.8	38.4	39.7	41.8
		S/T	0.91	0.84	0.70	0.56	1.00	0.84	0.71	0.57	1.00	0.87	0.73	0.59	1.00	0.89	**0.75**	0.61	1.00	1.00	0.78	0.63	1.00	1.00	0.83	0.69
		ΔT	27	25	22	18	27	25	22	18	27	26	22	19	27	25	**22**	18	27	25	22	18	28	26	23	19
		kW	2.69	2.69	2.69	2.71	3.01	3.01	3.00	3.02	3.36	3.36	3.35	3.37	3.74	3.74	**3.73**	3.75	4.16	4.16	4.15	4.18	4.66	4.66	4.65	4.68
		Amps	9.9	9.9	9.8	9.9	11.3	11.3	11.3	11.4	12.9	12.9	12.9	13.0	14.7	14.6	**14.6**	14.7	16.6	16.6	16.6	16.7	18.9	18.9	18.8	18.9
		HI PR	249	250	252	257	288	289	291	295	329	330	332	336	373	374	**376**	380	420	421	423	427	471	472	474	478
		LO PR	121	123	126	131	128	130	133	138	135	136	139	144	140	142	**145**	150	145	147	150	155	152	153	156	162
	1600	MBh	47.0	47.6	48.9	51.0	46.6	47.2	48.5	50.6	45.4	46.0	47.4	49.4	43.3	44.0	45.3	47.4	40.8	41.5	42.8	44.9	38.6	39.2	40.6	42.6
		S/T	1.00	0.88	0.74	0.60	1.00	0.88	0.75	0.60	1.00	0.91	0.77	0.63	1.00	0.93	0.79	0.65	1.00	1.00	0.81	0.67	1.00	1.00	0.86	0.72
		ΔT	26	24	21	17	26	24	21	17	26	25	21	17	26	24	21	17	26	24	21	17	27	25	22	18
		kW	2.71	2.71	2.70	2.72	3.02	3.02	3.02	3.04	3.37	3.37	3.37	3.39	3.75	3.75	3.75	3.77	4.18	4.18	4.17	4.19	4.68	4.67	4.67	4.69
		Amps	9.9	9.9	9.9	10.0	11.4	11.4	11.3	11.5	13.0	13.0	13.0	13.1	14.7	14.7	14.7	14.8	16.7	16.7	16.6	16.7	18.9	18.9	18.9	19.0
		HI PR	252	253	255	259	291	292	293	298	331	333	334	339	375	376	378	382	423	424	426	430	473	474	476	480
		LO PR	123	125	128	133	131	132	135	140	137	138	142	147	142	144	147	152	148	149	152	157	154	156	159	164
	1800	MBh	48.0	48.6	50.0	52.0	47.6	48.2	49.6	51.6	46.4	47.0	48.4	50.4	44.4	45.0	46.3	48.4	41.9	42.5	43.9	45.9	39.6	40.2	41.6	43.7
		S/T	1.00	0.88	0.75	0.61	1.00	0.89	0.75	0.61	1.00	0.91	0.78	0.64	1.00	1.00	0.80	0.66	1.00	1.00	0.82	0.68	1.00	1.00	0.87	0.73
		ΔT	25	23	20	16	25	23	20	16	25	24	20	17	25	23	20	16	25	23	20	16	26	24	21	17
		kW	2.72	2.72	2.71	2.74	3.04	3.03	3.03	3.05	3.39	3.39	3.38	3.40	3.77	3.76	3.76	3.78	4.19	4.19	4.18	4.21	4.69	4.69	4.68	4.71
		Amps	10.0	10.0	10.0	10.1	11.4	11.4	11.4	11.5	13.1	13.0	13.0	13.1	14.8	14.8	14.8	14.9	16.7	16.7	16.7	16.8	19.0	19.0	19.0	19.1
		HI PR	254	255	257	261	293	294	296	300	334	335	337	341	378	379	381	385	425	426	428	432	476	477	478	483
		LO PR	126	128	131	136	133	135	138	143	140	141	144	149	145	146	149	155	150	152	155	160	157	158	161	166
85	1400	MBh	46.9	47.5	48.9	50.9	46.5	47.1	48.5	50.5	45.3	45.9	47.3	49.4	43.3	43.9	45.3	47.3	40.8	41.4	42.8	44.8	38.5	39.2	40.5	42.6
		S/T	1.00	0.94	0.80	0.66	1.00	0.95	0.81	0.67	1.00	1.00	0.84	0.69	1.00	1.00	0.85	0.71	1.00	1.00	0.88	0.73	1.00	1.00	0.93	0.79
		ΔT	31	29	26	22	31	29	26	22	31	29	26	22	31	29	26	22	31	29	25	22	32	30	26	23
		kW	2.70	2.70	2.69	2.72	3.01	3.01	3.01	3.03	3.36	3.36	3.36	3.38	3.74	3.74	3.74	3.76	4.17	4.17	4.16	4.18	4.67	4.66	4.66	4.68
		Amps	9.9	9.9	9.9	10.0	11.3	11.3	11.3	11.4	12.9	12.9	12.9	13.0	14.7	14.7	14.6	14.8	16.6	16.6	16.6	16.7	18.9	18.9	18.9	19.0
		HI PR	251	252	253	258	290	291	292	297	330	331	333	337	374	375	377	381	422	423	424	429	472	473	475	479
		LO PR	123	124	128	133	130	132	135	140	137	138	141	146	142	143	146	151	147	149	152	157	154	155	158	163
	1600	MBh	47.7	48.4	49.7	51.8	47.3	48.0	49.3	51.4	46.1	46.8	48.1	50.2	44.1	44.7	46.1	48.2	41.6	42.3	43.6	45.7	39.3	40.0	41.3	43.4
		S/T	1.00	0.98	0.84	0.70	1.00	0.98	0.85	0.71	1.00	1.00	0.87	0.73	1.00	1.00	0.89	0.75	1.00	1.00	0.91	0.77	1.00	1.00	1.00	0.82
		ΔT	30	28	25	21	30	28	24	21	30	28	25	21	30	28	24	21	30	28	24	21	31	29	25	22
		kW	2.71	2.71	2.71	2.73	3.03	3.03	3.02	3.05	3.38	3.38	3.37	3.40	3.76	3.76	3.75	3.78	4.18	4.18	4.18	4.20	4.68	4.68	4.67	4.70
		Amps	10.0	10.0	9.9	10.0	11.4	11.4	11.4	11.5	13.0	13.0	13.0	13.1	14.8	14.7	14.7	14.8	16.7	16.7	16.7	16.8	19.0	19.0	18.9	19.0
		HI PR	253	254	256	260	292	293	295	299	333	334	335	340	377	378	379	384	424	425	427	431	474	475	477	481
		LO PR	125	127	130	135	132	134	137	142	139	140	143	148	144	146	149	154	149	151	154	159	156	157	161	166
	1800	MBh	48.7	49.4	50.7	52.8	48.3	49.0	50.3	52.4	47.2	47.8	49.1	51.2	45.1	45.8	47.1	49.2	42.6	43.3	44.6	46.7	40.4	41.0	42.4	44.4
		S/T	1.00	0.98	0.85	0.71	1.00	1.00	0.85	0.71	1.00	1.00	0.88	0.74	1.00	1.00	0.90	0.76	1.00	1.00	0.92	0.78	1.00	1.00	1.00	0.83
		ΔT	29	27	24	20	29	27	24	20	29	27	24	20	29	27	23	20	29	27	23	20	30	28	24	21
		kW	2.73	2.73	2.72	2.74	3.04	3.04	3.03	3.06	3.39	3.39	3.39	3.41	3.77	3.77	3.77	3.79	4.20	4.19	4.19	4.21	4.70	4.69	4.69	4.71
		Amps	10.0	10.0	10.0	10.1	11.5	11.5	11.4	11.5	13.1	13.1	13.0	13.2	14.8	14.8	14.8	14.9	16.8	16.7	16.7	16.8	19.0	19.0	19.0	19.1
		HI PR	255	256	258	262	294	295	297	301	335	336	338	342	379	380	382	386	426	427	429	433	477	478	480	484
		LO PR	128	129	132	137	135	137	140	145	141	143	146	151	147	148	151	156	152	153	157	162	159	160	163	168

IDB: Entering Indoor Dry Bulb Temperature

High and low pressures are measured at the liquid and suction service valves.

Shaded area reflects AHRI Rating Conditions.

kW = Total system power

Amps = Outdoor unit amps (compressor + fan)

			Outdoor Ambient Temperature																							
			65ºF				75ºF				85ºF				95ºF				105ºF				115ºF			
			Entering Indoor Wet Bulb Temperature																							
IDB	Airflow		59	63	67	71	59	63	67	71	59	63	67	71	59	63	67	71	59	63	67	71	59	63	67	71
70	1790	MBh	58.2	59.0	60.8	-	57.7	58.5	60.3	-	56.2	57.0	58.8	-	53.6	54.5	56.2	-	50.5	51.3	53.0	-	47.6	48.4	50.1	-
		S/T	0.67	0.59	0.46	-	0.67	0.60	0.46	-	0.70	0.62	0.49	-	0.72	0.64	0.51	-	0.74	0.67	0.53	-	1.00	0.72	0.58	-
		ΔT	19	17	14	-	19	17	14	-	19	17	14	-	19	17	14	-	19	17	13	-	20	18	14	-
		kW	3.35	3.35	3.34	-	3.78	3.78	3.77	-	4.25	4.25	4.24	-	4.76	4.76	4.75	-	5.34	5.33	5.33	-	6.01	6.00	6.00	-
		Amps	13.2	13.2	13.1	-	15.1	15.1	15.1	-	17.3	17.3	17.2	-	19.6	19.6	19.6	-	22.2	22.2	22.2	-	25.3	25.3	25.3	-
		HI PR	258	259	261	-	298	299	301	-	340	341	343	-	386	387	389	-	435	436	438	-	487	488	490	-
		LO PR	116	118	121	-	123	125	128	-	130	131	134	-	135	136	139	-	140	141	144	-	146	148	150	-
	2000	MBh	59.1	59.9	61.6	-	58.6	59.4	61.1	-	57.1	57.9	59.6	-	54.5	55.3	57.0	-	51.3	52.1	53.9	-	48.4	49.3	51.0	-
		S/T	0.70	0.62	0.49	-	0.71	0.63	0.49	-	0.73	0.66	0.52	-	0.75	0.68	0.54	-	0.77	0.70	0.56	-	1.00	0.75	0.61	-
		ΔT	18	16	13	-	18	16	13	-	18	16	13	-	18	16	13	-	18	16	12	-	19	17	14	-
		kW	3.37	3.37	3.36	-	3.80	3.79	3.79	-	4.27	4.27	4.26	-	4.78	4.78	4.77	-	5.35	5.35	5.34	-	6.03	6.02	6.01	-
		Amps	13.2	13.2	13.2	-	15.2	15.2	15.1	-	17.4	17.3	17.3	-	19.7	19.7	19.6	-	22.3	22.3	22.3	-	25.4	25.4	25.3	-
		HI PR	260	261	263	-	300	301	303	-	342	343	345	-	388	389	391	-	437	438	440	-	489	490	492	-
		LO PR	118	120	123	-	125	127	130	-	131	133	136	-	136	138	141	-	142	143	146	-	148	149	152	-
	2250	MBh	60.3	61.1	62.8	-	59.8	60.6	62.3	-	58.3	59.1	60.8	-	55.7	56.5	58.2	-	52.5	53.4	55.1	-	49.7	50.5	52.2	-
		S/T	0.71	0.64	0.50	-	0.72	0.64	0.51	-	0.75	0.67	0.53	-	0.76	0.69	0.55	-	1.00	0.71	0.57	-	1.00	0.76	0.63	-
		ΔT	17	15	12	-	17	15	12	-	17	15	12	-	17	15	12	-	17	15	11	-	18	16	13	-
		kW	3.39	3.39	3.38	-	3.81	3.81	3.80	-	4.29	4.28	4.28	-	4.80	4.80	4.79	-	5.37	5.37	5.36	-	6.04	6.04	6.03	-
		Amps	13.3	13.3	13.3	-	15.3	15.3	15.2	-	17.4	17.4	17.4	-	19.8	19.8	19.7	-	22.4	22.4	22.4	-	25.5	25.5	25.4	-
		HI PR	262	263	265	-	302	303	305	-	345	346	347	-	390	391	393	-	439	440	442	-	491	492	494	-
		LO PR	121	122	125	-	128	129	132	-	134	135	138	-	139	140	143	-	144	145	148	-	150	152	155	-
75	1790	MBh	58.3	59.1	60.8	63.4	57.8	58.6	60.3	62.9	56.3	57.1	58.8	61.4	53.7	**54.5**	56.2	58.8	50.5	51.3	53.0	55.7	47.6	48.4	50.2	52.8
		S/T	0.80	0.72	0.59	0.44	0.80	0.73	0.59	0.45	0.83	0.75	0.62	0.47	1.00	**0.77**	0.64	0.49	1.00	0.79	0.66	0.52	1.00	0.85	0.71	0.57
		ΔT	23	21	18	14	23	21	18	14	23	21	18	14	23	**21**	18	14	23	21	17	14	24	22	19	15
		kW	3.35	3.35	3.34	3.37	3.78	3.77	3.77	3.80	4.25	4.25	4.24	4.27	4.76	**4.76**	4.75	4.78	5.33	5.33	5.32	5.36	6.01	6.00	5.99	6.03
		Amps	13.2	13.1	13.1	13.3	15.1	15.1	15.0	15.2	17.3	17.2	17.2	17.4	19.6	**19.6**	19.6	19.7	22.2	22.2	22.2	22.3	25.3	25.3	25.2	25.4
		HI PR	258	259	261	265	298	299	301	306	340	341	343	348	386	**387**	389	393	435	436	438	442	487	488	490	495
		LO PR	116	118	121	126	123	125	128	133	130	131	134	139	135	**136**	139	144	140	141	144	149	146	148	150	155
	2000	MBh	59.1	59.9	61.6	64.3	58.6	59.4	61.1	63.8	57.1	57.9	59.6	62.3	54.5	**55.3**	57.0	59.7	51.4	52.2	53.9	56.5	48.5	49.3	51.0	53.6
		S/T	0.83	0.75	0.62	0.47	0.84	0.76	0.62	0.48	0.86	0.79	0.65	0.51	1.00	**0.81**	0.67	0.53	1.00	0.83	0.69	0.55	1.00	0.88	0.74	0.60
		ΔT	22	20	17	13	22	20	17	13	22	20	17	13	22	**20**	17	13	22	20	16	13	23	21	18	14
		kW	3.37	3.37	3.36	3.39	3.79	3.79	3.78	3.82	4.27	4.26	4.26	4.29	4.78	**4.78**	4.77	4.80	5.35	5.35	5.34	5.37	6.02	6.02	6.01	6.04
		Amps	13.2	13.2	13.2	13.3	15.2	15.2	15.1	15.3	17.3	17.3	17.3	17.4	19.7	**19.7**	19.6	19.8	22.3	22.3	22.3	22.4	25.4	25.4	25.3	25.5
		HI PR	260	261	263	267	300	301	303	307	342	343	345	350	388	**389**	391	395	437	438	440	444	489	490	492	497
		LO PR	118	120	123	127	125	127	130	134	131	133	136	141	136	**138**	141	146	142	143	146	151	148	149	152	157
	2250	MBh	60.3	61.1	62.9	65.5	59.8	60.6	62.3	65.0	58.3	59.1	60.8	63.5	55.7	**56.5**	58.3	60.9	52.6	53.4	55.1	57.7	49.7	50.5	52.2	54.9
		S/T	0.84	0.77	0.63	0.49	0.85	0.77	0.64	0.49	1.00	0.80	0.66	0.52	1.00	**0.82**	0.68	0.54	1.00	0.84	0.70	0.56	1.00	0.89	0.76	0.61
		ΔT	21	19	16	12	21	19	16	12	21	20	16	12	21	**19**	16	12	21	19	16	12	22	20	17	13
		kW	3.39	3.38	3.38	3.41	3.81	3.81	3.80	3.83	4.29	4.28	4.27	4.31	4.80	**4.79**	4.79	4.82	5.37	5.37	5.36	5.39	6.04	6.04	6.03	6.06
		Amps	13.3	13.3	13.3	13.4	15.3	15.2	15.2	15.4	17.4	17.4	17.4	17.5	19.8	**19.8**	19.7	19.9	22.4	22.4	22.3	22.5	25.5	25.4	25.4	25.6
		HI PR	262	263	265	270	303	304	305	310	345	346	348	352	390	**391**	393	398	439	440	442	447	492	493	495	499
		LO PR	121	122	125	130	128	129	132	137	134	135	138	143	139	**140**	143	148	144	145	148	153	150	152	155	160

IDB: Entering Indoor Dry Bulb Temperature

High and low pressures are measured at the liquid and suction service valves.

Shaded area reflects ACCA (TVA) Rating Conditions.

kW = Total system power

Amps = Outdoor unit amps (compressor + fan)

			Outdoor Ambient Temperature																							
			65ºF				75ºF				85ºF				95ºF				105ºF				115ºF			
			Entering Indoor Wet Bulb Temperature																							
IDB	Airflow		59	63	67	71	59	63	67	71	59	63	67	71	59	63	67	71	59	63	67	71	59	63	67	71
80	1790	MBh	58.6	59.4	61.1	63.7	58.1	58.9	60.6	63.2	56.6	57.4	59.1	61.7	54.0	54.8	**56.5**	59.1	50.8	51.6	53.3	56.0	47.9	48.7	50.5	53.1
		S/T	0.92	0.85	0.71	0.57	1.00	0.85	0.72	0.57	1.00	0.88	0.74	0.60	1.00	0.90	**0.76**	0.62	1.00	0.92	0.78	0.64	1.00	1.00	0.84	0.69
		ΔT	27	25	22	18	27	25	22	18	27	25	22	18	27	25	**22**	18	27	25	21	18	28	26	23	19
		kW	3.35	3.35	3.34	3.38	3.78	3.78	3.77	3.80	4.25	4.25	4.24	4.27	4.76	4.76	**4.75**	4.79	5.34	5.33	5.33	5.36	6.01	6.00	6.00	6.03
		Amps	13.2	13.1	13.1	13.3	15.1	15.1	15.1	15.2	17.3	17.3	17.2	17.4	19.6	19.6	**19.6**	19.7	22.2	22.2	22.2	22.3	25.3	25.3	25.3	25.4
		HI PR	258	259	261	266	299	300	302	306	341	342	344	348	386	387	**389**	394	435	436	438	443	488	489	491	495
		LO PR	117	118	121	126	124	125	128	133	130	131	134	139	135	137	**140**	144	140	142	145	150	147	148	151	156
	2000	MBh	59.4	60.2	61.9	64.6	58.9	59.7	61.4	64.1	57.4	58.2	59.9	62.6	54.8	55.6	57.3	60.0	51.7	52.5	54.2	56.8	48.8	49.6	51.3	53.9
		S/T	0.96	0.88	0.74	0.60	1.00	0.89	0.75	0.61	1.00	0.91	0.78	0.63	1.00	0.93	0.79	0.65	1.00	0.95	0.82	0.67	1.00	1.00	0.87	0.73
		ΔT	26	24	21	17	26	24	21	17	26	25	21	18	26	24	21	17	26	24	21	17	27	25	22	18
		kW	3.37	3.37	3.36	3.39	3.80	3.79	3.79	3.82	4.27	4.27	4.26	4.29	4.78	4.78	4.77	4.80	5.35	5.35	5.34	5.38	6.02	6.02	6.01	6.05
		Amps	13.2	13.2	13.2	13.3	15.2	15.2	15.1	15.3	17.4	17.3	17.3	17.5	19.7	19.7	19.6	19.8	22.3	22.3	22.3	22.4	25.4	25.4	25.3	25.5
		HI PR	260	261	263	268	301	302	304	308	343	344	346	350	388	389	391	396	437	438	440	445	490	491	493	497
		LO PR	119	120	123	128	126	127	130	135	132	133	136	141	137	138	141	146	142	143	146	151	148	150	153	158
	2250	MBh	60.6	61.4	63.2	65.8	60.1	60.9	62.6	65.3	58.6	59.4	61.1	63.8	56.0	56.8	58.6	61.2	52.9	53.7	55.4	58.0	50.0	50.8	52.5	55.1
		S/T	0.97	0.89	0.76	0.61	1.00	0.90	0.76	0.62	1.00	0.92	0.79	0.64	1.00	0.94	0.81	0.66	1.00	1.00	0.83	0.69	1.00	1.00	0.88	0.74
		ΔT	25	23	20	16	25	23	20	16	25	24	20	17	25	23	20	16	25	23	20	16	26	24	21	17
		kW	3.39	3.39	3.38	3.41	3.81	3.81	3.80	3.84	4.29	4.28	4.28	4.31	4.80	4.80	4.79	4.82	5.37	5.37	5.36	5.39	6.04	6.04	6.03	6.06
		Amps	13.3	13.3	13.3	13.4	15.3	15.3	15.2	15.4	17.4	17.4	17.4	17.5	19.8	19.8	19.7	19.9	22.4	22.4	22.3	22.5	25.5	25.5	25.4	25.6
		HI PR	263	264	266	270	303	304	306	310	345	346	348	353	391	392	394	398	440	441	443	447	492	493	495	499
		LO PR	121	123	125	130	128	129	132	137	134	136	139	143	139	141	144	149	144	146	149	154	151	152	155	160
85	1790	MBh	59.5	60.3	62.1	64.7	59.0	59.8	61.6	64.2	57.5	58.3	60.1	62.7	54.9	55.8	57.5	60.1	51.8	52.6	54.3	56.9	48.9	49.7	51.4	54.1
		S/T	1.00	0.95	0.81	0.67	1.00	0.96	0.82	0.68	1.00	0.98	0.84	0.70	1.00	1.00	0.86	0.72	1.00	1.00	0.89	0.74	1.00	1.00	0.94	0.79
		ΔT	31	29	25	22	31	29	25	22	31	29	26	22	31	29	25	22	30	29	25	22	32	30	26	23
		kW	3.36	3.36	3.35	3.38	3.79	3.78	3.78	3.81	4.26	4.26	4.25	4.28	4.77	4.77	4.76	4.79	5.34	5.34	5.33	5.37	6.02	6.01	6.00	6.04
		Amps	13.2	13.2	13.2	13.3	15.1	15.1	15.1	15.2	17.3	17.3	17.3	17.4	19.7	19.6	19.6	19.8	22.3	22.3	22.2	22.4	25.3	25.3	25.3	25.4
		HI PR	260	261	262	267	300	301	303	307	342	343	345	349	388	389	390	395	437	438	439	444	489	490	492	496
		LO PR	119	120	123	128	126	127	130	135	132	133	136	141	137	138	141	146	142	143	146	151	148	150	153	158
	2000	MBh	60.4	61.2	62.9	65.5	59.9	60.7	62.4	65.0	58.4	59.2	60.9	63.5	55.8	56.6	58.3	60.9	52.6	53.4	55.2	57.8	49.7	50.6	52.3	54.9
		S/T	1.00	0.98	0.85	0.70	1.00	0.99	0.85	0.71	1.00	1.00	0.88	0.73	1.00	1.00	0.90	0.75	1.00	1.00	0.92	0.78	1.00	1.00	0.97	0.83
		ΔT	30	28	25	21	30	28	24	21	30	28	25	21	30	28	24	21	30	28	24	21	31	29	25	22
		kW	3.38	3.38	3.37	3.40	3.80	3.80	3.79	3.83	4.28	4.27	4.27	4.30	4.79	4.79	4.78	4.81	5.36	5.36	5.35	5.38	6.03	6.03	6.02	6.05
		Amps	13.3	13.3	13.2	13.4	15.2	15.2	15.2	15.3	17.4	17.4	17.3	17.5	19.7	19.7	19.7	19.8	22.4	22.3	22.3	22.5	25.4	25.4	25.4	25.5
		HI PR	261	263	264	269	302	303	305	309	344	345	347	351	390	391	392	397	439	440	441	446	491	492	494	498
		LO PR	120	122	125	130	127	129	132	137	134	135	138	143	139	140	143	148	144	145	148	153	150	152	154	159
	2250	MBh	61.6	62.4	64.1	66.8	61.1	61.9	63.6	66.2	59.6	60.4	62.1	64.7	57.0	57.8	59.5	62.2	53.8	54.7	56.4	59.0	51.0	51.8	53.5	56.1
		S/T	1.00	0.99	0.86	0.71	1.00	1.00	0.86	0.72	1.00	1.00	0.89	0.75	1.00	1.00	0.91	0.77	1.00	1.00	0.93	0.79	1.00	1.00	0.98	0.84
		ΔT	29	27	24	20	29	27	24	20	29	27	24	20	29	27	24	20	29	27	23	20	30	28	24	21
		kW	3.40	3.39	3.39	3.42	3.82	3.82	3.81	3.84	4.30	4.29	4.28	4.32	4.81	4.80	4.80	4.83	5.38	5.38	5.37	5.40	6.05	6.05	6.04	6.07
		Amps	13.4	13.3	13.3	13.5	15.3	15.3	15.3	15.4	17.5	17.5	17.4	17.6	19.8	19.8	19.8	19.9	22.4	22.4	22.4	22.5	25.5	25.5	25.5	25.6
		HI PR	264	265	267	271	304	305	307	312	346	348	349	354	392	393	395	399	441	442	444	448	493	494	496	501
		LO PR	123	124	127	132	130	131	134	139	136	137	140	145	141	142	145	150	146	148	150	155	153	154	157	162

IDB: Entering Indoor Dry Bulb Temperature

High and low pressures are measured at the liquid and suction service valves.

Shaded area reflects AHRI Rating Conditions.

kW = Total system power

Amps = Outdoor unit amps (compressor + fan)

GSZ140181L* - ARUF25B14A*+TXV

	Outdoor Ambient Temperature																
	65	60	55	50	47	45	40	35	30	25	20	17	15	10	5	0	-5
MBh	23.71	22.11	20.54	18.99	**18.00**	17.25	15.37	13.65	12.25	11.21	10.42	10.00	9.47	8.13	6.80	5.47	4.13
T/R	35.99	33.56	31.17	28.82	27.32	26.18	23.33	20.72	18.60	17.01	15.82	15.18	14.37	12.35	10.32	8.30	6.27
kW	1.51	1.48	1.45	1.42	**1.40**	1.39	1.36	1.33	1.30	1.27	1.24	1.22	1.21	1.18	1.15	1.12	1.09
Amps	7.2	6.6	6.1	5.7	5.5	5.3	5.0	4.7	4.4	4.2	4.0	3.8	3.8	3.5	3.3	3.0	2.7
COP	4.60	4.37	4.15	3.92	3.76	3.63	3.31	3.01	2.76	2.59	2.46	2.40	2.29	2.02	1.74	1.43	1.11

GSZ140181L* / ARUF25B14A*+TXV

	Outdoor Ambient Temperature																
	65	60	55	50	47	45	40	35	30	25	20	17	15	10	5	0	-5
MBh	20.55	19.31	18.08	16.88	**16.10**	15.54	14.13	12.79	11.70	10.89	10.31	10.00	9.59	8.58	7.56	6.54	5.53
T/R	29.51	27.99	26.48	24.96	24.05	23.23	21.10	19.10	17.47	16.27	15.40	14.93	14.33	12.81	11.29	9.77	8.25
kW	1.69	1.64	1.60	1.56	**1.53**	1.51	1.47	1.43	1.39	1.34	1.30	1.27	1.26	1.21	1.17	1.13	1.09
Amps	6.3	6.2	6.0	5.8	5.7	5.6	5.4	5.2	5.0	4.9	4.7	4.6	4.5	4.3	4.1	3.9	3.7
COP	3.57	3.44	3.31	3.18	3.08	3.01	2.81	2.62	2.47	2.38	2.32	2.30	2.24	2.07	1.89	1.70	1.49

GSZ140241K* / ARUF25B14A*+TXV

	Outdoor Ambient Temperature																
	65	60	55	50	47	45	40	35	30	25	20	17	15	10	5	0	-5
MBh	30.74	28.63	26.55	24.50	**23.20**	22.20	19.70	17.43	15.59	14.20	13.16	12.60	11.89	10.13	8.36	6.59	4.83
T/R	32.7	30.5	28.3	26.1	24.7	23.6	21.0	18.6	16.6	15.1	14.0	13.4	12.7	10.8	8.9	7.0	5.1
kW	1.97	1.93	1.88	1.84	**1.81**	1.79	1.75	1.70	1.66	1.61	1.57	1.54	1.52	1.48	1.43	1.39	1.34
Amps	9.1	8.4	7.8	7.2	6.9	6.7	6.3	5.9	5.6	5.3	5.0	4.8	4.7	4.4	4.1	3.7	3.3
COP	4.57	4.36	4.14	3.91	3.76	3.63	3.31	3.00	2.76	2.58	2.46	2.40	2.29	2.01	1.71	1.39	1.05

GSZ140241L* / ARUF25B14A*+TXV

	Outdoor Ambient Temperature																
	65	60	55	50	47	45	40	35	30	25	20	17	15	10	5	0	-5
MBh	30.41	28.33	26.29	24.28	**23.00**	22.02	19.57	17.34	15.53	14.17	13.15	12.60	11.91	10.17	8.44	6.71	4.97
T/R	31.5	29.6	27.8	25.9	24.8	23.7	21.1	18.7	16.7	15.3	14.2	13.6	12.8	11.0	9.1	7.2	5.4
kW	2.03	1.97	1.91	1.86	**1.82**	1.80	1.74	1.68	1.63	1.57	1.51	1.48	1.45	1.40	1.34	1.28	1.22
Amps	7.5	7.2	7.0	6.7	6.6	6.5	6.2	6.0	5.7	5.5	5.2	5.1	5.0	4.7	4.5	4.2	4.0
COP	4.39	4.21	4.03	3.83	3.70	3.59	3.29	3.02	2.80	2.65	2.55	2.50	2.40	2.13	1.85	1.53	1.19

GSZ140251A* - ARUF25B14*+TXV

	Outdoor Ambient Temperature																
	65	60	55	50	47	45	40	35	30	25	20	17	15	10	5	0	-5
MBh	29.87	28.00	26.17	24.36	**23.20**	22.36	20.21	18.21	16.57	15.36	14.48	14.00	13.39	11.85	10.32	8.79	7.25
T/R	32.16	30.15	28.17	26.23	24.98	24.07	21.76	19.60	17.84	16.54	15.58	15.07	14.41	12.76	11.11	9.46	7.81
kW	1.85	1.82	1.79	1.75	**1.74**	1.72	1.69	1.66	1.63	1.59	1.56	1.54	1.53	1.50	1.46	1.43	1.40
Amps	8.7	8.0	7.4	6.9	6.6	6.4	6.0	5.6	5.3	5.0	4.7	4.6	4.5	4.2	3.9	3.5	3.2
COP	4.73	4.51	4.29	4.07	3.92	3.80	3.50	3.22	2.99	2.83	2.72	2.66	2.57	2.32	2.07	1.80	1.52

Calculations are based on nominal CFM and 70°F indoor dry bulb.

Amps = Outdoor unit amps (comp.+fan)

Note: Shaded area is AHRI Rating Conditions at 47°F outdoor ambient temperature.

kW = Total system power

GSZ140301K* / ARUF29B14 + TXV**

	Outdoor Ambient Temperature																
	65	60	55	50	47	45	40	35	30	25	20	17	15	10	5	0	-5
MBh	37.15	34.70	32.29	29.92	**28.40**	27.27	24.40	21.77	19.62	18.03	16.84	16.20	15.39	13.35	11.32	9.29	7.25
T/R	39.5	36.9	34.4	31.8	30.2	29.0	26.0	23.2	20.9	19.2	17.9	17.2	16.4	14.2	12.0	9.9	7.7
kW	2.48	2.42	2.37	2.31	**2.27**	2.25	2.19	2.14	2.08	2.02	1.96	1.93	1.91	1.85	1.79	1.74	1.68
Amps	11.9	10.9	10.1	9.4	9.0	8.8	8.3	7.8	7.4	7.0	6.6	6.4	6.2	5.8	5.4	5.0	4.5
COP	4.39	4.20	4.00	3.80	3.66	3.55	3.26	2.99	2.77	2.61	2.51	2.46	2.36	2.12	1.85	1.57	1.27

GSZ140311A* - ARUF29B14*+TXV

	Outdoor Ambient Temperature																
	65	60	55	50	47	45	40	35	30	25	20	17	15	10	5	0	-5
MBh	39.73	37.29	34.88	32.52	**31.00**	29.90	27.11	24.49	22.34	20.77	19.62	19.00	18.20	16.20	14.20	12.20	10.20
T/R	42.28	39.68	37.13	34.61	32.99	31.82	28.85	26.06	23.78	22.10	20.88	20.22	19.37	17.24	15.11	12.98	10.86
kW	3.01	2.92	2.83	2.74	**2.69**	2.65	2.56	2.47	2.39	2.30	2.21	2.15	2.12	2.03	1.94	1.85	1.76
Amps	14.3	13.2	12.2	11.4	10.9	10.6	10.0	9.4	8.9	8.5	8.0	7.7	7.6	7.1	6.6	6.1	5.5
COP	3.87	3.74	3.61	3.47	3.38	3.30	3.10	2.90	2.75	2.65	2.61	2.59	2.52	2.34	2.15	1.93	1.70

GSZ140361K* / ARUF37C14 + TXV**

	Outdoor Ambient Temperature																
	65	60	55	50	47	45	40	35	30	25	20	17	15	10	5	0	-5
MBh	42.72	39.94	37.21	34.52	**32.80**	31.52	28.28	25.30	22.87	21.06	19.72	19.00	18.08	15.78	13.48	11.18	8.88
T/R	37.0	34.6	32.2	29.9	28.4	27.3	24.5	21.9	19.8	18.2	17.1	16.4	15.6	13.7	11.7	9.7	7.7
kW	2.81	2.76	2.71	2.66	**2.63**	2.61	2.56	2.50	2.45	2.40	2.35	2.32	2.30	2.25	2.20	2.15	2.10
Amps	13.6	12.5	11.6	10.8	10.3	10.0	9.4	8.9	8.4	7.9	7.5	7.3	7.1	6.6	6.2	5.7	5.1
COP	4.46	4.24	4.03	3.81	3.66	3.55	3.24	2.96	2.73	2.57	2.46	2.40	2.30	2.06	1.80	1.53	1.24

GSZ140361L* / ARUF37C14 + TXV**

	Outdoor Ambient Temperature																
	65	60	55	50	47	45	40	35	30	25	20	17	15	10	5	0	-5
MBh	42.06	39.35	36.69	34.08	**32.40**	31.17	28.02	25.12	22.75	21.00	19.70	19.00	18.11	15.87	13.64	11.41	9.17
T/R	35.7	33.7	31.7	29.8	28.6	27.5	24.7	22.2	20.1	18.5	17.4	16.8	16.0	14.0	12.0	10.1	8.1
kW	2.88	2.80	2.72	2.65	**2.60**	2.57	2.49	2.42	2.34	2.26	2.19	2.14	2.11	2.03	1.96	1.88	1.80
Amps	10.8	10.5	10.2	9.8	9.6	9.5	9.2	8.8	8.5	8.2	7.8	7.6	7.5	7.2	6.8	6.5	6.2
COP	4.28	4.12	3.95	3.77	3.65	3.55	3.29	3.05	2.85	2.72	2.64	2.60	2.51	2.29	2.04	1.78	1.49

GSZ140371A* - ARUF37C14*+TXV

	Outdoor Ambient Temperature																
	65	60	55	50	47	45	40	35	30	25	20	17	15	10	5	0	-5
MBh	42.85	40.38	37.94	35.55	**34.00**	32.87	30.16	27.45	25.32	23.73	22.61	22.00	21.20	19.20	17.20	15.20	13.20
T/R	40.28	37.95	35.67	33.42	31.96	30.90	28.35	25.80	23.80	22.31	21.25	20.68	19.93	18.05	16.17	14.29	12.41
kW	2.75	2.71	2.67	2.64	**2.61**	2.60	2.56	2.52	2.48	2.44	2.40	2.38	2.37	2.33	2.29	2.25	2.21
Amps	13.7	12.6	11.6	10.8	10.4	10.1	9.5	9.0	8.5	8.0	7.6	7.3	7.2	6.7	6.3	5.8	5.2
COP	4.57	4.36	4.16	3.95	3.82	3.71	3.45	3.19	2.99	2.85	2.76	2.71	2.63	2.42	2.20	1.98	1.75

Calculations are based on nominal CFM and 70°F indoor dry bulb.
Note: Shaded area is AHRI Rating Conditions at 47°F outdoor ambient temperature.

Amps = Outdoor unit amps (comp.+fan)
kW = Total system power

GSZ140421K* - ARUF43D14A*+TXV

	Outdoor Ambient Temperature																
	65	60	55	50	47	45	40	35	30	25	20	17	15	10	5	0	-5
MBh	51.58	48.34	45.15	42.02	**40.00**	38.54	34.80	31.31	28.47	26.37	24.83	24.00	22.93	20.27	17.60	14.93	12.27
T/R	37.9	35.5	33.2	30.9	29.4	28.3	25.6	23.0	20.9	19.4	18.2	17.6	16.9	14.9	12.9	11.0	9.0
kW	3.41	3.34	3.27	3.21	**3.17**	3.14	3.08	3.01	2.94	2.88	2.81	2.77	2.74	2.68	2.61	2.54	2.48
Amps	16.5	15.2	14.0	13.0	12.5	12.2	11.4	10.7	10.2	9.6	9.1	8.8	8.6	8.0	7.5	6.8	6.1
COP	4.44	4.24	4.04	3.84	3.70	3.60	3.32	3.05	2.84	2.69	2.59	2.54	2.45	2.22	1.98	1.72	1.45

GSZ140481K* - ARUF61D14A*+TXV

	Outdoor Ambient Temperature																
	65	60	55	50	47	45	40	35	30	25	20	17	15	10	5	0	-5
MBh	56.58	53.20	49.88	46.61	**44.50**	42.97	39.18	35.56	32.58	30.41	28.84	28.00	26.90	24.15	21.40	18.65	15.90
T/R	33.7	31.7	29.7	27.8	26.5	25.6	23.3	21.2	19.4	18.1	17.2	16.7	16.0	14.4	12.7	11.1	9.5
kW	3.51	3.48	3.44	3.40	**3.38**	3.36	3.33	3.29	3.25	3.22	3.18	3.16	3.14	3.10	3.07	3.03	2.99
Amps	17.2	15.8	14.6	13.6	13.0	12.6	11.8	11.1	10.5	9.9	9.4	9.0	8.8	8.2	7.6	7.0	6.2
COP	4.72	4.49	4.25	4.02	3.86	3.74	3.45	3.17	2.94	2.77	2.66	2.60	2.51	2.28	2.04	1.80	1.56

GSZ140491K* - ARUF49C14A*+TXV

	Outdoor Ambient Temperature																
	65	60	55	50	47	45	40	35	30	25	20	17	15	10	5	0	-5
MBh	59.32	55.59	51.92	48.32	**46.00**	44.32	40.01	36.01	32.74	30.32	28.55	27.60	26.37	23.31	20.24	17.17	14.11
T/R	39.2	36.8	34.3	32.0	30.4	29.3	26.5	23.8	21.7	20.1	18.9	18.3	17.4	15.4	13.4	11.4	9.3
kW	3.96	3.87	3.79	3.70	**3.64**	3.61	3.52	3.43	3.34	3.25	3.16	3.11	3.08	2.99	2.90	2.81	2.72
Amps	19.1	17.5	16.2	15.1	14.5	14.1	13.2	12.4	11.7	11.1	10.5	10.1	9.9	9.3	8.6	7.9	7.1
COP	4.39	4.21	4.02	3.83	3.70	3.60	3.33	3.08	2.87	2.73	2.64	2.60	2.51	2.29	2.05	1.79	1.52

GSZ140601K* - ASPT61D14A*

	Outdoor Ambient Temperature																
	65	60	55	50	47	45	40	35	30	25	20	17	15	10	5	0	-5
MBh	75.71	71.04	66.44	61.91	**59.00**	56.89	51.54	46.52	42.41	39.39	37.18	36.00	34.47	30.63	26.80	22.97	19.13
T/R	38.9	36.5	34.2	31.8	30.3	29.3	26.5	23.9	21.8	20.3	19.1	18.5	17.7	15.8	13.8	11.8	9.8
kW	4.91	4.79	4.67	4.55	**4.48**	4.43	4.31	4.20	4.08	3.96	3.84	3.77	3.72	3.60	3.48	3.36	3.25
Amps	23.4	21.5	19.8	18.4	17.6	17.2	16.1	15.1	14.3	13.5	12.8	12.3	12.0	11.2	10.4	9.5	8.5
COP	4.52	4.35	4.17	3.99	3.86	3.76	3.50	3.25	3.05	2.92	2.84	2.80	2.71	2.49	2.25	2.00	1.73

Calculations are based on nominal CFM and 70°F indoor dry bulb.
Note: Shaded area is AHRI Rating Conditions at 47°F outdoor ambient temperature.

Amps = Outdoor unit amps (comp.+fan)
kW = Total system power

GSZ140181L* + ARUF25B14** + TXV				
Conditions: 80 °F IBD, 67 °F IWB @ 610 CFM				
Outdoor Tem. ° F.	Total BTU/h	Sensible BTU/h	Latent BTU/h	Total Watts
75	18,700	14,230	4,452	1,146
80	18,500	14,337	4,157	1,205
85	18,200	14,359	3,854	1,265
90	17,850	14,267	3,577	1,328
95	**17,400**	**14,082**	**3,322**	**1,394**
100	16,900	13,857	3,060	1,463
105	16,400	13,668	2,747	1,538
110	15,930	13,605	2,328	1,618
115	15,500	13,767	1,745	1,706
TVA Conditions @ 95° OD DB, 75° ID DB 63° ID WB				
95°	16,800	13,853	3,020	1,395

GSZ140191A* + ARUF25B14** + TXV				
Conditions: 80 °F IBD, 67 °F IWB @ 614 CFM				
Outdoor Tem. ° F.	Total BTU/h	Sensible BTU/h	Latent BTU/h	Total Watts
75	18,650	13,962	4,688	1,250
80	18,450	14,033	4,392	1,315
85	18,200	14,103	4,097	1,380
90	17,800	13,970	3,830	1,450
95	**17,400**	**13,838**	**3,562**	**1,525**
100	16,900	13,650	3,275	1,605
105	16,450	13,463	2,987	1,685
110	16,000	13,514	2,486	1,780
115	15,550	13,564	1,986	1,870
TVA Conditions @ 95° OD DB, 75° ID DB 63° ID WB				
95°	16,800	13,550	3,250	1,525

GSZ140241K* + ARUF25B14** + TXV				
Conditions: 80 °F IBD, 67 °F IWB @ 870 CFM				
Outdoor Tem. ° F.	Total BTU/h	Sensible BTU/h	Latent BTU/h	Total Watts
75	25,100	19,076	6,024	1,580
80	25,400	19,093	6,307	1,675
85	24,500	19,110	5,390	1,770
90	24,550	18,915	5,635	1,870
95	**23,400**	**18,720**	**4,680**	**1,970**
100	23,350	18,532	4,819	2,080
105	22,100	18,343	3,757	2,190
110	22,050	18,368	3,683	2,385
115	20,900	18,392	2,508	2,450
TVA Conditions @ 95° OD DB, 75° ID DB 63° ID WB				
95°	22,600	18,532	4,068	1,970

GSZ140241L* + ARUF25B14** + TXV				
Conditions: 80 °F IBD, 67 °F IWB @ 870 CFM				
Outdoor Tem. ° F.	Total BTU/h	Sensible BTU/h	Latent BTU/h	Total Watts
75	24,700	19,350	5,350	1,525
80	24,450	19,500	4,950	1,640
85	24,050	19,550	4,500	1,760
90	23,600	19,400	4,200	1,885
95	**23,000**	**19,150**	**3,850**	**2,020**
100	22,350	18,850	3,500	2,160
105	21,700	18,600	3,100	2,310
110	21,050	18,500	2,550	2,470
115	20,500	18,750	1,750	2,645
TVA Conditions @ 95° OD DB, 75° ID DB 63° ID WB				
95°	22,150	18,700	3,450	2,020

GSZ140251A* + ARUF25B14** + TXV				
Conditions: 80 °F IBD, 67 °F IWB @ 614 CFM				
Outdoor Tem. ° F.	Total BTU/h	Sensible BTU/h	Latent BTU/h	Total Watts
75	24,500	17,976	6,524	1,625
80	24,200	18,076	6,124	1,720
85	23,900	18,176	5,724	1,810
90	23,350	18,015	5,360	1,910
95	**22,850**	**17,853**	**4,997**	**2,010**
100	22,200	17,600	4,600	2,120
105	21,550	17,347	4,203	2,235
110	20,950	17,424	3,526	2,365
115	20,350	17,501	2,849	2,495
TVA Conditions @ 95° OD DB, 75° ID DB 63° ID WB				
95°	22,000	17,450	4,550	2,010

GSZ140301K* + ARUF29B14** + TXV				
Conditions: 80 °F IBD, 67 °F IWB @ 870 CFM				
Outdoor Tem. ° F.	Total BTU/h	Sensible BTU/h	Latent BTU/h	Total Watts
75	29,600	20,720	8,880	1,880
80	29,250	20,764	8,486	1,995
85	28,900	20,808	8,092	2,110
90	28,250	20,616	7,634	2,230
95	**27,600**	**20,424**	**7,176**	**2,350**
100	26,850	20,130	6,720	2,490
105	26,100	19,836	6,264	2,630
110	25,400	19,922	5,479	2,790
115	24,700	20,007	4,693	2,950
TVA Conditions @ 95° OD DB, 75° ID DB 63° ID WB				
95°	26,600	19,950	6,650	2,360

GSZ140311A* + ARUF29B14** + TXV Conditions: 80 °F IBD, 67 °F IWB @ 614 CFM				
Outdoor Tem. ° F.	Total BTU/h	Sensible BTU/h	Latent BTU/h	Total Watts
75	30,550	22,385	8,165	1,920
80	30,200	22,492	7,708	2,025
85	29,850	22,600	7,250	2,130
90	29,200	22,378	6,822	2,245
95	**28,550**	**22,156**	**6,394**	**2,360**
100	27,750	21,845	5,930	2,485
105	27,000	21,534	5,466	2,615
110	26,250	21,596	4,679	2,765
115	25,550	21,658	3,892	2,915
TVA Conditions @ 95° OD DB, 75° ID DB 63° ID WB				
95°	27,550	21,650	5,900	2,360

GSZ140361K* + ARUF37C14** + TXV Conditions: 80 °F IBD, 67 °F IWB @ 1070 CFM				
Outdoor Tem. ° F.	Total BTU/h	Sensible BTU/h	Latent BTU/h	Total Watts
75	37,700	26,390	11,310	2,430
80	37,250	26,443	10,807	2,575
85	36,800	26,496	10,304	2,720
90	36,000	26,272	9,728	2,880
95	**35,200**	**26,048**	**9,152**	**3,040**
100	34,200	25,640	8,560	3,220
105	33,200	25,232	7,968	3,400
110	32,300	25,333	6,967	3,610
115	31,400	25,434	5,966	3,820
TVA Conditions @ 95° OD DB, 75° ID DB 63° ID WB				
95°	33,900	25,425	8,475	3,050

GSZ140361L* + ARUF37C14** + TXV Conditions: 80 °F IBD, 67 °F IWB @ 1070 CFM				
Outdoor Tem. ° F.	Total BTU/h	Sensible BTU/h	Latent BTU/h	Total Watts
75	34,800	25,589	9,200	2,145
80	34,450	25,781	8,657	2,310
85	33,900	25,819	8,094	2,480
90	33,250	25,654	7,572	2,660
95	**32,400**	**25,321**	**7,085**	**2,845**
100	31,500	24,917	6,583	3,040
105	30,550	24,578	5,988	3,250
110	29,650	24,464	5,205	3,480
115	28,900	24,756	4,129	3,730
TVA Conditions @ 95° OD DB, 75° ID DB 63° ID WB				
95°	31,250	24,730	6,502	2,850

GSZ140371A* + ARUF37C14** + TXV Conditions: 80 °F IBD, 67 °F IWB @ 614 CFM				
Outdoor Tem. ° F.	Total BTU/h	Sensible BTU/h	Latent BTU/h	Total Watts
75	36,400	26,466	9,934	2,265
80	35,950	26,564	9,386	2,390
85	35,500	26,663	8,837	2,515
90	34,750	26,417	8,333	2,650
95	**34,000**	**26,170**	**7,830**	**2,785**
100	33,050	25,798	7,277	2,940
105	32,150	25,427	6,723	3,090
110	31,300	25,505	5,795	3,270
115	30,450	25,582	4,868	3,450
TVA Conditions @ 95° OD DB, 75° ID DB 63° ID WB				
95°	32,800	25,550	7,250	2,790

GSZ140421K* + ARUF43C14** + TXV Conditions: 80 °F IBD, 67 °F IWB @ 1300 CFM				
Outdoor Tem. ° F.	Total BTU/h	Sensible BTU/h	Latent BTU/h	Total Watts
75	41,800	29,678	12,122	2,720
80	41,300	29,935	11,365	2,870
85	40,800	30,192	10,608	3,020
90	39,900	29,916	9,984	3,190
95	**39,000**	**29,640**	**9,360**	**3,360**
100	37,900	29,172	8,728	3,545
105	36,800	28,704	8,096	3,730
110	35,800	28,794	7,006	3,950
115	34,800	28,884	5,916	4,170
TVA Conditions @ 95° OD DB, 75° ID DB 63° ID WB				
95°	37,600	28,952	8,648	3,360

GSZ140481K + ARUF61D14** + TXV Conditions: 80 °F IBD, 67 °F IWB @ 1560 CFM				
Outdoor Tem. ° F.	Total BTU/h	Sensible BTU/h	Latent BTU/h	Total Watts
75	48,300	35,742	12,558	3,110
80	47,700	36,005	11,696	3,290
85	47,100	36,267	10,833	3,470
90	46,550	35,909	10,642	3,665
95	**45,000**	**35,550**	**9,450**	**3,860**
100	43,750	34,988	8,763	4,075
105	42,500	34,425	8,075	4,290
110	41,350	34,499	6,852	4,545
115	40,200	34,572	5,628	4,800
TVA Conditions @ 95° OD DB, 75° ID DB 63° ID WB				
95°	43,400	34,720	8,680	3,860

GSZ140491K* + ARUF49C14** + TXV Conditions: 80 °F IBD, 67 °F IWB @ 1400 CFM				
Outdoor Tem. ° F.	**Total BTU/h**	**Sensible BTU/h**	**Latent BTU/h**	**Total Watts**
75	47,700	33,867	13,833	3,000
80	47,100	33,906	13,194	3,175
85	46,500	33,945	12,555	3,350
90	45,500	33,660	11,840	3,540
95	**44,500**	**33,375**	**11,125**	**3,730**
100	43,250	33,068	10,183	3,940
105	42,000	32,760	9,240	4,150
110	40,850	32,856	7,995	4,400
115	39,700	32,951	6,749	4,650
TVA Conditions @ 95° OD DB, 75° ID DB 63° ID WB				
95°	42,900	32,604	10,296	3,730

GSZ140601K* + ASPT61D14** + TXV Conditions: 80 °F IBD, 67 °F IWB @ 1790 CFM				
Outdoor Tem. ° F.	**Total BTU/h**	**Sensible BTU/h**	**Latent BTU/h**	**Total Watts**
75	60,600	42,420	18,180	3,770
80	59,850	42,782	17,069	4,010
85	59,100	43,143	15,957	4,250
90	57,800	42,759	15,041	4,505
95	**56,500**	**42,375**	**14,125**	**4,760**
100	54,900	41,708	13,192	5,045
105	53,300	41,041	12,259	5,330
110	51,900	41,226	10,675	5,670
115	50,500	41,410	9,090	6,010
TVA Conditions @ 95° OD DB, 75° ID DB 63° ID WB				
95°	54,500	41,420	13,080	4,770

ECN	REV	ZONE	DESCRIPTION	CHK	D	DATE
XXXXXXX	A	XXXXX		–	GL	

MODEL	DIMENSIONS		
	W"	D"	H"
GSZ140181/191**	29	29	34½
GSZ140241/251**	29	29	34½
GSZ140301**	29	29	36¼
GSZ140311A*	35½	35½	34⅝
GSZ140361**	29	29	36¼
GSZ140371A*	35½	35½	40
GSZ140421**	35½	35½	39¾
GSZ140481**	29	29	36¼
GSZ140491**	35½	35½	34½
GSZ140601**	35½	35½	34½

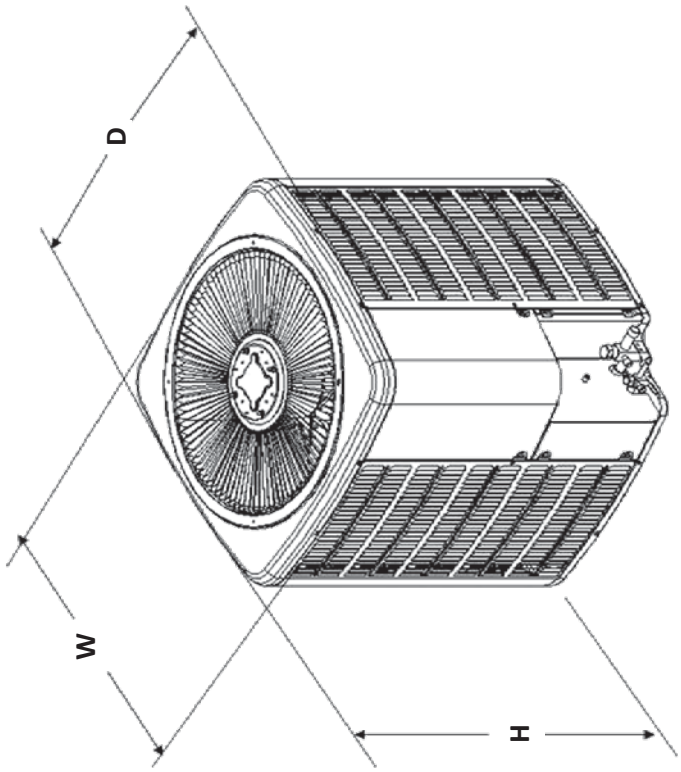

SPECIAL CHARACTERISTICS:

6σ = 6SIGMA

CC = CRITICAL CHARACTERISTIC

SC = SIGNIFICANT CHARACTERISTIC

COMPONENTS AND MATERIALS SPECIFIED HEREIN WILL ALSO CONFORM TO THE APPLICABLE SECTION OF GOODMAN MSP 824.01 WORKMANSHIP STANDARD FOR FIT, FEEL AND FINISH.

CONFIDENTIAL PROPERTY OF THE GOODMAN MANUFACTURING COMPANY, L.P. NOT TO BE DISCLOSED TO OTHERS, COPIED, OR USED FOR ANY PURPOSE EXCEPT AS AUTHORIZED IN WRITING. MUST BE RETURNED UPON DEMAND, ON COMPLETION OF ORDER, OR OTHER PURPOSE FOR WHICH IT WAS LENT.

Goodman Manufacturing Co., L.P.

DRAWING TO BE INTERPRETED IN ACCORDANCE WITH ASME Y14.100

DIMENSIONS ARE IN INCHES UNLESS OTHERWISE NOTED

TOLERANCES:
X ± 1
ANGLES ± 1.5°
.XX ± .03
.XXX ± .015
HOLE Ø ± .005
TUBE CUT LG. ± .063

GSZ14

DWN BY:

ENG:

DO NOT SCALE DRAWING

SHT 1 OF 1

REV A

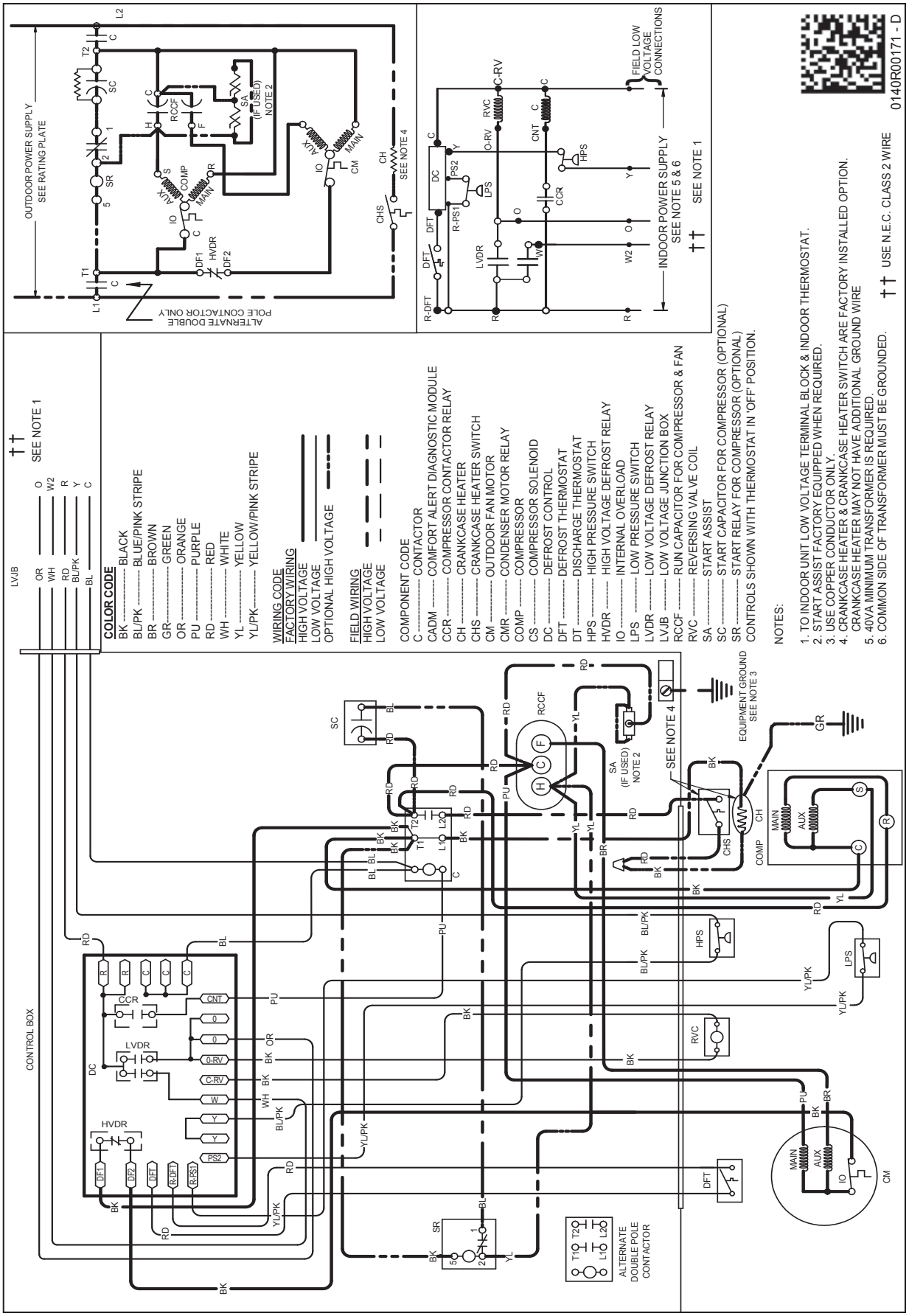

WARNING

High Voltage: Disconnect all power before servicing or installing this unit. Multiple power sources may be present. Failure to do so may cause property damage, personal injury, or death.

Wiring is subject to change. Always refer to the wiring diagram or the unit for the most up-to-date wiring.

MODEL #	DESCRIPTION	GSZ140 181L*	GSZ140 191**	GSZ140 241K*/251**	GSZ14 241L*	GSZ140 301**	GSZ140 311**
ABK-20	Anchor Bracket Kit ◊	X	X	X	X	X	
ASC-01	Anti-Short Cycle Kit	X	X	X	X	X	X
AFE18-60A	All-fuel Kit	X	X	X	X	X	
OT/EHR18-60	Emergency Heat Relay kit	X	X	X	X	X	
FSK01A[1]	Freeze Protection Kit	X	X	X	X	X	X
CSR-U-1	Hard-start Kit	X*	X	X	X*	X	X
CSR-U-2	Hard-start Kit						
CSR-U-3	Hard-start Kit						
LAKT01A	Low-Ambient Kit	X	X	X	X	X	X
0130R00000S	Low-Pressure Switch Kit	X	X	X	X	X	
OT18-60A[2]	Outdoor Thermostat	X	X	X	X	X	X
TX2N4A [3]	TXV Kit	X	X	X	X		
TX3N4 [3]	TXV Kit					X	X
TX5N4 [3]	TXV Kit						

◊ Contains 20 brackets; four brackets needed to anchor unit to pad
[1] Installed on indoor coil
[2] Required for heat pump applications where ambient temperatures fall below 0°F with 50% or higher relative humidity.
[3] Condensing units and heat pumps with reciprocating or rotary compressors require the use of start-assist components when used in conjunction with an indoor coil using a non-bleed thermal expansion valve refrigerant metering device or liquid line solenoid kit. The TXV should always be sized based on the tonnage of the outdoor unit.
* These units come with factory installed Hard-start kit.

MODEL #	DESCRIPTION	GSZ140 361**	GSZ14 0371**	GSZ14 0421**	GSZ14 0481/491**	GSZ14 0601**
ABK-20	Anchor Bracket Kit ◊	X		X	X	X
ASC-01	Anti-Short Cycle Kit	X	X	X	X	X
AFE18-60A	All-fuel Kit	X		X	X	X
OT/EHR18-60	Emergency Heat Relay kit	X		X	X	X
FSK01A[1]	Freeze Protection Kit	X	X	X	X	X
CSR-U-1	Hard-start Kit	X	X			
CSR-U-2	Hard-start Kit			X	X	X
CSR-U-3	Hard-start Kit				X	X
LAKT01A	Low-Ambient Kit	X	X	X	X	X
0130R00000S	Low-Pressure Switch Kit	X		X	X	X
OT18-60A[2]	Outdoor Thermostat	X	X	X	X	X
TX2N4A [3]	TXV Kit					
TX3N4 [3]	TXV Kit	X	X			
TX5N4 [3]	TXV Kit			X	X	X

◊ Contains 20 brackets; four brackets needed to anchor unit to pad
[1] Installed on indoor coil
[2] Required for heat pump applications where ambient temperatures fall below 0°F with 50% or higher relative humidity.
[3] Condensing units and heat pumps with reciprocating or rotary compressors require the use of start-assist components when used in conjunction with an indoor coil using a non-bleed thermal expansion valve refrigerant metering device or liquid line solenoid kit. The TXV should always be sized based on the tonnage of the outdoor unit.
* These units come with factory installed Hard-start kit.

All AHRI system ratings are accessible in the System Configurator tool via PartnerLink.

Our continuing commitment to quality products may mean a change in specifications without notice.
©2022 DAIKIN COMFORT TECHNOLOGIES MANUFACTURING, L.P. • Houston, Texas • Printed in the USA.