Goodman
Air Conditioning & Heating

GSZ13

Cooling Capacity: 17,400 to 57,000 BTU/h
Heating Capacity: 17,000 to 58,000 BTU/h

Energy-Efficient Split System Heat Pump 1½ to 5 Tons

Contents

Nomenclature 2
Product Specifications 3
Expanded Cooling Data 4
Expanded Heating Data 18
AHRI Ratings 20
Dimensions 21
Wiring Diagram 22
Accessories 23

Standard Features

- High-efficiency scroll compressor
- SmartShift® technology to ensure quiet reliable defrost
- Factory-installed bi-flow liquid-line filter drier
- Factory-installed suction-line accumulator
- Factory-installed compressor crankcase heater
- Factory-installed high-capacity muffler
- High- and low-pressure switches
- Service valves with sweat connections and easy access to gauge ports
- Copper tube/enhanced aluminum fin coil
- Fully charged for 15' of tubing length
- Contactor with lug connection
- Ground lug connection
- AHRI Certified; ETL Listed

Cabinet Features

- Goodman® brand sound control top design
- Steel louver coil guard
- Heavy-gauge galvanized-steel cabinet
- Attractive Architectural Gray powder-paint finish with 500-hour salt-spray approval
- Top and side maintenance access
- Service ports and controls are accessible while unit is operating
- When properly anchored, meets the 2010 Florida Building Code unit integrity requirements for hurricane-type winds (Anchor bracket kits available.)

10 YEAR PARTS LIMITED WARRANTY*

* Complete warranty details available from your local dealer or at www.goodmanmfg.com. To receive the 10-Year Parts Limited Warranty, online registration must be completed within 60 days of installation. Online registration is not required in California or Quebec.

G	S	Z	13	036	1	A	A
1	2	3	4,5	6,7,8	9	10	11

Brand

G Goodman® Brand

Product Category

S Split System

Unit Type

X Condenser R-410A

Z Heat Pump R-410A

Efficiency

13 13 SEER

14 14 SEER

16 16 SEER

Engineering *

Minor Revision

Engineering *

Major Revision

Electrical

1 208/230 V, 1 Phase, 60 Hz

2 220/240 V, 1 Phase, 50 Hz

Nominal Capacity

018	1½ Tons	042	3½ Tons
024	2 Tons	048	4 Tons
030	2½ Tons	049	4 Tons
036	3 Tons	060	5 Tons

* Neither used for order entry or inventory management.

	GSZ13 0181A*	GSZ13 0241B*	GSZ13 0301A*	GSZ13 0361B*	GSZ13 0421A*	GSZ13 0481A*	GSZ13 0601A*
Nominal Capacities							
Cooling (BTU/h)	18,000	24,000	30,000	36,000	42,000	48,000	60,000
Heating (BTU/h)	18,000	24,000	30,000	36,000	42,000	48,000	60,000
Decibels	71	73	72	74	74	76	75
Compressor							
RLA	9.0	13.5	14.1	16.7	17.9	19.9	26.4
LRA	48.0	58.3	73.0	79.0	112.0	109.0	134.0
Type	Scroll	Scroll	Scroll	Scroll	Scroll	Scroll	Scroll
Condenser Fan Motor							
Horsepower	1/6	1/8	1/6	1/4	1/4	1/4	1/4
FLA	0.70	0.70	1.10	1.26	1.26	1.26	1.50
Refrigeration System							
Refrigerant Line Size[1]							
Liquid Line Size (“O.D.)	3/8"	3/8"	3/8"	3/8"	3/8"	3/8"	3/8"
Suction Line Size (“O.D.)	3/4"	3/4"	3/4"	7/8"	1 1/8"	1 1/8"	1 1/8"
Refrigerant Connection Size							
Liquid Valve Size (“O.D.)	3/8"	3/8"	3/8"	3/8"	3/8"	3/8"	3/8"
Suction Valve Size (“O.D.)	3/4"	3/4"	3/4"	3/4"	7/8"	7/8"	7/8"
Valve Connection Type	Sweat	Sweat	Sweat	Sweat	Sweat	Sweat	Sweat
Refrigerant Charge	109	99	124	128	149	204	231
Shipped with Orifice Size	0.051	0.057	0.065	0.071	0.074	0.078	0.088
Electrical Data							
Volts-Hz	208/230-60	208/230-60	208/230-60	208/230-60	208/230-60	208/230-60	208/230-60
Minimum Circuit Ampacity [2]	12.4	17.5	18.7	22.1	23.6	26.1	34.5
Max. Overcurrent Protection [3]	20	25	30	35	40	45	60
Min / Max Volts	197 / 253	197 / 253	197 / 253	197 / 253	197 / 253	197 / 253	197 / 253
Electrical Conduit Size	1/2" or 3/4"	1/2" or 3/4"	1/2" or 3/4"	1/2" or 3/4"	1/2" or 3/4"	1/2" or 3/4"	1/2" or 3/4"
Equipment Weight (lbs)	145	136	142	156	202	219	268
Ship Weight (lbs)	162	153	159	174	220	237	290

[1] Tested and rated in accordance with ARI Standard 210/240
[2] Wire size should be determined in accordance with National Electrical Codes; extensive wire runs will require larger wire sizes
[3] Must use time-delay fuses or HACR-type circuit breakers of the same size as noted.

Notes

- Always check the S&R plate for electrical data on the unit being installed.
- Installer will need to supply 7/8” to 1 1/8” adapters for suction line connections.
- Unit is charged with refrigerant for 15’ of 3/8” liquid line. System charge must be adjusted per Installation Instructions Final Charge Procedure.
- Installation of these units requires the specified TXV Kit to be installed on the indoor coil. THE SPECIFIED TXV IS DETERMINED BY THE OUTDOOR UNIT NOT THE INDOOR COIL.

			Outdoor Ambient Temperature																							
			65ºF				75ºF				85ºF				95ºF				105ºF				115ºF			
			Entering Indoor Wet Bulb Temperature																							
IDB	Airflow		59	63	67	71	59	63	67	71	59	63	67	71	59	63	67	71	59	63	67	71	59	63	67	71
70	675	MBh	17.1	17.7	19.4	-	16.7	17.3	18.9	-	16.3	16.9	18.5	-	15.9	16.4	18.0	-	15.1	15.6	17.1	-	14.0	14.5	15.9	-
		S/T	0.74	0.62	0.43	-	0.77	0.64	0.45	-	0.79	0.66	0.46	-	0.82	0.68	0.47	-	0.85	0.71	0.49	-	0.85	0.71	0.49	-
		ΔT	17	15	11	-	17	15	11	-	17	15	11	-	18	15	12	-	17	15	11	-	16	14	11	-
		kW	1.25	1.27	1.31	-	1.34	1.37	1.41	-	1.42	1.45	1.50	-	1.49	1.52	1.57	-	1.55	1.59	1.64	-	1.61	1.64	1.69	-
		Amps	4.5	4.6	4.8	-	4.9	5.0	5.2	-	5.3	5.4	5.6	-	5.7	5.8	6.0	-	6.0	6.2	6.4	-	6.4	6.5	6.8	-
		Hi PR	225	242	255	-	252	271	287	-	287	309	326	-	327	352	371	-	367	395	418	-	406	437	461	-
		Lo PR	109	116	126	-	115	122	133	-	119	127	139	-	125	133	146	-	131	140	152	-	136	144	158	-
	600	MBh	16.6	17.2	18.8	-	16.2	16.8	18.4	-	15.8	16.4	17.9	-	15.4	16.0	17.5	-	14.6	15.2	16.6	-	13.6	14.0	15.4	-
		S/T	0.71	0.59	0.41	-	0.73	0.61	0.43	-	0.75	0.63	0.44	-	0.78	0.65	0.45	-	0.81	0.67	0.47	-	0.81	0.68	0.47	-
		ΔT	18	16	12	-	18	16	12	-	18	16	12	-	18	16	12	-	18	16	12	-	17	15	11	-
		kW	1.24	1.26	1.30	-	1.33	1.36	1.40	-	1.41	1.44	1.48	-	1.48	1.51	1.56	-	1.54	1.57	1.62	-	1.59	1.63	1.68	-
		Amps	4.5	4.6	4.7	-	4.8	4.9	5.1	-	5.2	5.4	5.6	-	5.6	5.7	5.9	-	6.0	6.1	6.3	-	6.3	6.5	6.7	-
		Hi PR	222	239	253	-	250	269	284	-	284	306	323	-	323	348	368	-	364	392	413	-	402	433	457	-
		Lo PR	108	114	125	-	114	121	132	-	118	126	137	-	124	132	144	-	130	138	151	-	134	143	156	-
	525	MBh	15.3	15.8	17.4	-	14.9	15.5	16.9	-	14.6	15.1	16.5	-	14.2	14.7	16.1	-	13.5	14.0	15.3	-	12.5	13.0	14.2	-
		S/T	0.68	0.57	0.40	-	0.71	0.59	0.41	-	0.73	0.61	0.42	-	0.75	0.63	0.43	-	0.78	0.65	0.45	-	0.78	0.66	0.45	-
		ΔT	18	16	12	-	19	16	12	-	19	16	12	-	19	16	12	-	18	16	12	-	17	15	11	-
		kW	1.21	1.23	1.27	-	1.30	1.32	1.36	-	1.38	1.40	1.45	-	1.44	1.47	1.52	-	1.50	1.53	1.58	-	1.55	1.59	1.64	-
		Amps	4.3	4.5	4.6	-	4.7	4.8	5.0	-	5.1	5.2	5.4	-	5.5	5.6	5.8	-	5.8	5.9	6.1	-	6.1	6.3	6.5	-
		Hi PR	216	232	245	-	242	261	275	-	275	296	313	-	314	338	356	-	353	380	401	-	390	420	443	-
		Lo PR	104	111	121	-	110	117	128	-	115	122	133	-	120	128	140	-	126	134	146	-	130	139	151	-
75	675	MBh	17.34	17.85	19.32	20.74	16.94	17.44	18.87	20.26	16.53	17.02	18.43	19.78	16.13	16.61	17.98	19.29	15.32	15.78	17.08	18.33	14.19	14.61	15.82	16.98
		S/T	0.84	0.76	0.57	0.37	0.88	0.78	0.59	0.38	0.90	0.80	0.61	0.39	0.93	0.83	0.63	0.40	0.96	0.86	0.65	0.42	0.97	0.87	0.66	0.42
		ΔT	20	18	15	10	20	19	15	11	20	19	15	11	20	19	15	11	20	18	15	10	19	17	14	10
		kW	1.26	1.28	1.32	1.36	1.35	1.38	1.42	1.46	1.43	1.46	1.51	1.56	1.50	1.54	1.58	1.64	1.57	1.60	1.65	1.70	1.62	1.65	1.71	1.76
		Amps	4.6	4.7	4.8	5.0	4.9	5.0	5.2	5.4	5.3	5.5	5.7	5.9	5.7	5.9	6.0	6.3	6.1	6.2	6.4	6.7	6.4	6.6	6.8	7.1
		Hi PR	227	244	258	269	255	274	289	302	290	312	329	343	330	355	375	391	371	399	422	440	410	441	466	486
		Lo PR	110	117	127	136	116	123	135	143	120	128	140	149	127	135	147	157	133	141	154	164	137	146	159	170
	600	MBh	16.8	17.3	18.8	20.1	16.4	16.9	18.3	19.7	16.1	16.5	17.9	19.2	15.7	**16.1**	17.5	18.7	14.9	15.3	16.6	17.8	13.8	14.2	15.4	16.5
		S/T	0.81	0.72	0.55	0.35	0.84	0.75	0.57	0.36	0.86	0.77	0.58	0.37	0.88	**0.79**	0.60	0.38	0.92	0.82	0.62	0.40	0.93	0.83	0.63	0.40
		ΔT	21	19	16	11	21	19	16	11	21	19	16	11	21	**20**	16	11	21	19	16	11	20	18	15	10
		kW	1.25	1.27	1.31	1.35	1.34	1.37	1.41	1.45	1.42	1.45	1.50	1.54	1.49	**1.52**	1.57	1.62	1.55	1.59	1.64	1.69	1.61	1.64	1.69	1.75
		Amps	4.5	4.6	4.8	4.9	4.9	5.0	5.2	5.3	5.3	5.4	5.6	5.8	5.7	**5.8**	6.0	6.2	6.0	6.2	6.4	6.6	6.4	6.5	6.8	7.0
		Hi PR	225	242	255	266	252	271	287	299	287	309	326	340	327	**352**	371	387	368	396	418	436	406	437	461	481
		Lo PR	109	116	126	134	115	122	133	142	119	127	139	148	125	**133**	146	155	131	140	153	162	136	145	158	168
	525	MBh	15.5	16.0	17.3	18.6	15.2	15.6	16.9	18.2	14.8	15.3	16.5	17.7	14.5	14.88	16.1	17.3	13.7	14.1	15.3	16.4	12.7	13.1	14.2	15.2
		S/T	0.78	0.69	0.53	0.34	0.81	0.72	0.55	0.35	0.83	0.74	0.56	0.36	0.85	0.76	0.58	0.37	0.88	0.79	0.60	0.39	0.89	0.80	0.60	0.39
		ΔT	21	19	16	11	21	20	16	11	21	20	16	11	22	20	16	11	21	20	16	11	20	18	15	10
		kW	1.22	1.24	1.28	1.32	1.31	1.33	1.38	1.42	1.39	1.42	1.46	1.51	1.46	1.49	1.53	1.58	1.51	1.55	1.60	1.65	1.57	1.60	1.65	1.71
		Amps	4.4	4.5	4.6	4.8	4.7	4.9	5.0	5.2	5.2	5.3	5.5	5.7	5.5	5.6	5.8	6.0	5.9	6.0	6.2	6.4	6.2	6.4	6.6	6.8
		Hi PR	218	235	248	258	245	263	278	290	278	299	316	330	317	341	360	376	357	384	405	423	394	424	448	467
		Lo PR	105	112	122	130	111	118	129	138	116	123	134	143	122	129	141	150	127	136	148	158	132	140	153	163

IDB: Entering Indoor Dry Bulb Temperature

Shaded area reflects ACCA (TVA) Rating Conditions

kW = Total system power

High and low pressures are measured at the liquid and suction service valves.

Amps = Outdoor unit amps (compressor + fan)

Cooling Data — GSZ130181A* / AR*F182416** (cont.)

			Outdoor Ambient Temperature																							
			65ºF				75ºF				85ºF				95ºF				105ºF				115ºF			
			Entering Indoor Wet Bulb Temperature																							
IDB	Airflow		59	63	67	71	59	63	67	71	59	63	67	71	59	63	67	71	59	63	67	71	59	63	67	71
80	675	MBh	17.65	18.03	19.27	20.60	17.24	17.61	18.82	20.12	16.83	17.19	18.37	19.64	16.42	16.77	17.92	19.16	15.60	15.94	17.03	18.20	14.45	14.76	15.77	16.86
		S/T	0.93	0.87	0.71	0.53	0.96	0.90	0.73	0.55	1.00	0.92	0.75	0.56	1.00	0.95	0.78	0.58	1.00	1.00	0.81	0.60	1.00	1.00	0.81	0.61
		ΔT	22	21	19	15	23	22	19	15	23	22	19	15	22	22	19	15	21	22	19	15	20	20	17	14
		kW	1.27	1.29	1.33	1.37	1.36	1.39	1.43	1.48	1.44	1.47	1.52	1.57	1.52	1.55	1.60	1.65	1.58	1.61	1.66	1.72	1.63	1.67	1.72	1.78
		Amps	4.6	4.7	4.9	5.0	5.0	5.1	5.3	5.4	5.4	5.5	5.7	5.9	5.8	5.9	6.1	6.3	6.1	6.3	6.5	6.8	6.5	6.7	6.9	7.2
		Hi PR	229	247	261	272	257	277	292	305	293	315	333	347	333	359	379	395	375	404	426	444	414	446	471	491
		Lo PR	111	118	129	137	117	125	136	145	122	129	141	151	128	136	148	158	134	143	156	166	139	147	161	171
	600	MBh	17.1	17.5	18.7	20.0	16.7	17.1	18.3	19.5	16.3	16.7	17.8	19.1	15.9	16.3	**17.4**	18.6	15.1	15.5	16.5	17.7	14.0	14.3	15.3	16.4
		S/T	0.88	0.83	0.67	0.50	0.92	0.86	0.70	0.52	0.94	0.88	0.72	0.54	0.97	0.91	**0.74**	0.55	1.00	0.94	0.77	0.57	1.00	0.95	0.77	0.58
		ΔT	23	22	19	15	23	23	20	16	24	23	20	16	24	23	**20**	16	23	22	19	16	21	21	18	15
		kW	1.26	1.28	1.32	1.36	1.35	1.38	1.42	1.46	1.43	1.46	1.51	1.56	1.50	1.54	**1.59**	1.64	1.57	1.60	1.65	1.70	1.62	1.65	1.71	1.76
		Amps	4.6	4.7	4.8	5.0	4.9	5.0	5.2	5.4	5.3	5.5	5.7	5.9	5.7	5.9	**6.1**	6.3	6.1	6.2	6.4	6.7	6.4	6.6	6.8	7.1
		Hi PR	227	244	258	269	255	274	290	302	290	312	329	343	330	355	**375**	391	371	400	422	440	410	441	466	486
		Lo PR	110	117	127	136	116	123	135	143	120	128	140	149	127	135	**147**	157	133	141	154	164	137	146	159	170
	525	MBh	15.8	16.2	17.3	18.5	15.4	15.8	16.9	18.0	15.1	15.4	16.5	17.6	14.7	15.0	16.1	17.2	14.0	14.3	15.3	16.3	12.9	13.2	14.1	15.1
		S/T	0.85	0.80	0.65	0.49	0.88	0.83	0.67	0.50	0.91	0.85	0.69	0.52	0.93	0.88	0.71	0.53	0.97	0.91	0.74	0.55	0.98	0.92	0.75	0.56
		ΔT	24	23	20	16	24	23	20	16	24	23	20	16	24	23	20	16	24	23	20	16	22	21	18	15
		kW	1.23	1.25	1.29	1.33	1.32	1.34	1.39	1.43	1.40	1.43	1.47	1.52	1.47	1.50	1.55	1.60	1.53	1.56	1.61	1.66	1.58	1.61	1.67	1.72
		Amps	4.4	4.5	4.7	4.9	4.8	4.9	5.1	5.3	5.2	5.3	5.5	5.7	5.6	5.7	5.9	6.1	5.9	6.1	6.3	6.5	6.3	6.4	6.6	6.9
		Hi PR	220	237	250	261	247	266	281	293	281	302	319	333	320	344	364	379	360	388	409	427	398	428	452	472
		Lo PR	106	113	124	132	112	120	131	139	117	124	136	145	123	131	143	152	129	137	149	159	133	142	155	165
85	675	MBh	17.96	18.30	19.17	20.45	17.54	17.88	18.72	19.98	17.12	17.45	18.28	19.50	16.70	17.03	17.83	19.02	15.87	16.18	16.94	18.07	14.70	14.98	15.69	16.74
		S/T	0.97	0.94	0.85	0.69	1.00	0.97	0.88	0.71	1.00	1.00	0.90	0.73	1.00	1.00	0.93	0.75	1.00	1.00	0.96	0.78	1.00	1.00	0.97	0.79
		ΔT	24	23	22	19	24	24	22	19	23	24	22	19	23	23	23	20	22	22	22	19	20	20	21	18
		kW	1.28	1.30	1.34	1.38	1.37	1.40	1.44	1.49	1.45	1.49	1.53	1.58	1.53	1.56	1.61	1.66	1.59	1.63	1.68	1.73	1.65	1.68	1.74	1.79
		Amps	4.6	4.7	4.9	5.1	5.0	5.1	5.3	5.5	5.4	5.6	5.8	6.0	5.8	6.0	6.2	6.4	6.2	6.3	6.6	6.8	6.6	6.7	7.0	7.2
		Hi PR	232	249	263	275	260	280	295	308	296	318	336	350	337	362	383	399	379	408	430	449	418	450	475	496
		Lo PR	112	119	130	138	118	126	137	146	123	131	143	152	129	137	150	160	135	144	157	167	140	149	163	173
	600	MBh	17.4	17.8	18.6	19.9	17.0	17.4	18.2	19.4	16.6	16.9	17.7	18.9	16.2	16.5	17.3	18.5	15.4	15.7	16.4	17.5	14.3	14.5	15.2	16.3
		S/T	0.93	0.89	0.81	0.65	0.96	0.93	0.84	0.68	0.98	0.95	0.86	0.70	1.00	0.98	0.89	0.72	1.00	1.00	0.92	0.75	1.00	1.00	0.93	0.75
		ΔT	25	24	23	20	25	25	23	20	25	25	23	20	25	25	23	20	24	24	23	20	22	22	22	19
		kW	1.27	1.29	1.33	1.37	1.36	1.39	1.43	1.48	1.44	1.47	1.52	1.57	1.52	1.55	1.60	1.65	1.58	1.61	1.66	1.72	1.63	1.67	1.72	1.78
		Amps	4.6	4.7	4.9	5.0	5.0	5.1	5.3	5.4	5.4	5.5	5.7	5.9	5.8	5.9	6.1	6.3	6.1	6.3	6.5	6.8	6.5	6.7	6.9	7.2
		Hi PR	229	247	261	272	257	277	292	305	293	315	333	347	333	359	379	395	375	404	426	444	414	446	471	491
		Lo PR	111	118	129	137	117	125	136	145	122	129	141	151	128	136	148	158	134	143	156	166	139	147	161	171
	525	MBh	16.1	16.4	17.2	18.3	15.7	16.0	16.8	17.9	15.3	15.6	16.4	17.5	15.0	15.3	16.0	17.0	14.2	14.5	15.2	16.2	13.2	13.4	14.1	15.0
		S/T	0.89	0.86	0.78	0.63	0.93	0.89	0.81	0.65	0.95	0.92	0.83	0.67	0.98	0.95	0.85	0.69	1.00	0.98	0.89	0.72	1.00	0.99	0.89	0.72
		ΔT	25	25	23	20	25	25	24	21	26	25	24	21	26	25	24	21	25	25	24	20	23	23	22	19
		kW	1.24	1.26	1.30	1.34	1.33	1.36	1.40	1.44	1.41	1.44	1.48	1.53	1.48	1.51	1.56	1.61	1.54	1.57	1.62	1.68	1.59	1.63	1.68	1.73
		Amps	4.5	4.6	4.7	4.9	4.8	4.9	5.1	5.3	5.2	5.4	5.6	5.8	5.6	5.7	5.9	6.2	6.0	6.1	6.3	6.6	6.3	6.5	6.7	7.0
		Hi PR	222	239	253	264	250	269	284	296	284	305	323	336	323	348	367	383	364	391	413	431	402	432	457	476
		Lo PR	108	114	125	133	114	121	132	140	118	126	137	146	124	132	144	153	130	138	151	161	134	143	156	166

IDB: Entering Indoor Dry Bulb Temperature

Shaded area reflects AHRI (TVA) Rating Conditions

kW = Total system power

High and low pressures are measured at the liquid and suction service valves.

Amps = Outdoor unit amps (compressor + fan)

			Outdoor Ambient Temperature																							
			65ºF				75ºF				85ºF				95ºF				105ºF				115ºF			
			Entering Indoor Wet Bulb Temperature																							
IDB	Airflow		59	63	67	71	59	63	67	71	59	63	67	71	59	63	67	71	59	63	67	71	59	63	67	71
70	900	MBh	22.5	23.4	25.6	-	22.0	22.8	25.0	-	21.5	22.3	24.4	-	21.0	21.7	23.8	-	19.9	20.6	22.6	-	18.4	19.1	21.0	-
		S/T	0.75	0.63	0.44	-	0.78	0.65	0.45	-	0.80	0.67	0.46	-	0.83	0.69	0.48	-	0.86	0.72	0.50	-	0.86	0.72	0.50	-
		ΔT	17	15	11	-	18	15	12	-	18	15	12	-	18	15	12	-	17	15	11	-	16	14	11	-
		KW	1.63	1.66	1.71	-	1.75	1.78	1.84	-	1.85	1.89	1.95	-	1.95	1.99	2.05	-	2.03	2.07	2.14	-	2.10	2.14	2.21	-
		Amps	6.1	6.2	6.4	-	6.5	6.7	6.9	-	7.1	7.3	7.5	-	7.6	7.8	8.0	-	8.1	8.3	8.5	-	8.5	8.8	9.0	-
		Hi Pr	228	246	259	-	256	276	291	-	291	314	331	-	332	357	377	-	373	402	424	-	413	444	469	-
		Lo Pr	103	110	120	-	109	116	127	-	114	121	132	-	119	127	139	-	125	133	145	-	129	138	150	-
	800	MBh	21.9	22.7	24.8	-	21.4	22.2	24.3	-	20.9	21.6	23.7	-	20.4	21.1	23.1	-	19.3	20.0	22.0	-	17.9	18.6	20.3	-
		S/T	0.72	0.60	0.42	-	0.74	0.62	0.43	-	0.76	0.64	0.44	-	0.79	0.66	0.46	-	0.82	0.68	0.47	-	0.82	0.69	0.48	-
		ΔT	18	16	12	-	18	16	12	-	18	16	12	-	18	16	12	-	18	16	12	-	17	15	11	-
		KW	1.62	1.65	1.70	-	1.74	1.77	1.83	-	1.84	1.88	1.94	-	1.93	1.97	2.04	-	2.01	2.05	2.12	-	2.08	2.12	2.19	-
		Amps	6.0	6.2	6.3	-	6.5	6.6	6.9	-	7.0	7.2	7.4	-	7.5	7.7	8.0	-	8.0	8.2	8.5	-	8.5	8.7	9.0	-
		Hi Pr	226	243	257	-	254	273	288	-	288	310	328	-	329	354	373	-	370	398	420	-	408	440	464	-
		Lo Pr	102	109	119	-	108	115	126	-	112	120	131	-	118	126	137	-	124	132	144	-	128	136	149	-
	700	MBh	20.2	20.9	22.9	-	19.7	20.4	22.4	-	19.3	20.0	21.9	-	18.8	19.5	21.3	-	17.8	18.5	20.3	-	16.5	17.1	18.8	-
		S/T	0.69	0.58	0.40	-	0.72	0.60	0.42	-	0.74	0.61	0.43	-	0.76	0.63	0.44	-	0.79	0.66	0.46	-	0.80	0.66	0.46	-
		ΔT	18	16	12	-	19	16	12	-	19	16	12	-	19	16	12	-	18	16	12	-	17	15	11	-
		KW	1.58	1.61	1.66	-	1.69	1.73	1.78	-	1.80	1.83	1.89	-	1.89	1.93	1.99	-	1.96	2.00	2.07	-	2.03	2.07	2.14	-
		Amps	5.9	6.0	6.2	-	6.3	6.5	6.7	-	6.8	7.0	7.2	-	7.3	7.5	7.7	-	7.8	8.0	8.2	-	8.2	8.4	8.7	-
		Hi Pr	219	236	249	-	246	265	280	-	280	301	318	-	319	343	362	-	359	386	407	-	396	426	450	-
		Lo Pr	99	106	115	-	105	112	122	-	109	116	127	-	115	122	133	-	120	128	139	-	124	132	144	-
75	900	MBh	22.92	23.60	25.54	27.41	22.39	23.05	24.95	26.78	21.85	22.50	24.36	26.14	21.32	21.95	23.76	25.50	20.25	20.85	22.57	24.23	18.76	19.32	20.91	22.44
		S/T	0.86	0.77	0.58	0.37	0.89	0.79	0.60	0.39	0.91	0.81	0.62	0.40	0.94	0.84	0.64	0.41	0.97	0.87	0.66	0.42	0.98	0.88	0.67	0.43
		ΔT	20	18	15	10	20	19	15	11	20	19	15	11	20	19	15	11	20	19	15	11	19	17	14	10
		KW	1.64	1.67	1.73	1.78	1.76	1.80	1.85	1.91	1.87	1.91	1.97	2.03	1.96	2.01	2.07	2.14	2.04	2.09	2.16	2.23	2.11	2.16	2.23	2.30
		Amps	6.1	6.3	6.5	6.7	6.6	6.8	7.0	7.2	7.2	7.3	7.6	7.9	7.7	7.8	8.1	8.4	8.1	8.3	8.6	8.9	8.6	8.8	9.1	9.5
		Hi Pr	231	248	262	273	259	279	294	307	294	317	334	349	335	361	381	397	377	406	429	447	417	448	474	494
		Lo Pr	104	111	121	129	110	117	128	137	115	122	133	142	121	128	140	149	126	134	147	156	131	139	152	162
	800	MBh	22.3	22.9	24.8	26.6	21.7	22.4	24.2	26.0	21.2	21.8	23.6	25.4	20.7	**21.3**	23.1	24.8	19.7	20.2	21.9	23.5	18.2	18.8	20.3	21.8
		S/T	0.82	0.73	0.55	0.36	0.85	0.76	0.57	0.37	0.87	0.78	0.59	0.38	0.90	**0.80**	0.61	0.39	0.93	0.83	0.63	0.40	0.94	0.84	0.63	0.41
		ΔT	21	19	16	11	21	19	16	11	21	19	16	11	21	**20**	16	11	21	19	16	11	20	18	15	10
		KW	1.63	1.66	1.71	1.77	1.75	1.79	1.84	1.90	1.85	1.89	1.95	2.02	1.95	**1.99**	2.05	2.12	2.03	2.07	2.14	2.21	2.10	2.14	2.21	2.28
		Amps	6.1	6.2	6.4	6.6	6.5	6.7	6.9	7.2	7.1	7.3	7.5	7.8	7.6	**7.8**	8.0	8.3	8.1	8.3	8.5	8.9	8.5	8.8	9.0	9.4
		Hi Pr	228	246	260	271	256	276	291	304	291	314	331	345	332	**357**	377	393	373	402	424	443	413	444	469	489
		Lo Pr	103	110	120	128	109	116	127	135	114	121	132	141	119	**127**	139	148	125	133	145	155	129	138	150	160
	700	MBh	20.5	21.1	22.9	24.6	20.1	20.7	22.4	24.0	19.6	20.2	21.8	23.4	19.1	19.7	21.3	22.9	18.2	18.7	20.2	21.7	16.8	17.3	18.7	20.1
		S/T	0.79	0.70	0.53	0.34	0.82	0.73	0.55	0.36	0.84	0.75	0.57	0.36	0.86	0.77	0.58	0.38	0.90	0.80	0.61	0.39	0.90	0.81	0.61	0.39
		ΔT	21	20	16	11	22	20	16	11	22	20	16	11	22	20	16	11	21	20	16	11	20	18	15	10
		KW	1.59	1.62	1.67	1.72	1.71	1.74	1.80	1.85	1.81	1.85	1.91	1.97	1.90	1.94	2.00	2.07	1.98	2.02	2.09	2.15	2.05	2.09	2.16	2.23
		Amps	5.9	6.0	6.2	6.5	6.4	6.5	6.7	7.0	6.9	7.1	7.3	7.6	7.4	7.6	7.8	8.1	7.8	8.0	8.3	8.6	8.3	8.5	8.8	9.1
		Hi Pr	222	238	252	263	249	267	282	295	283	304	321	335	322	346	366	382	362	390	412	429	400	431	455	474
		Lo Pr	100	107	117	124	106	113	123	131	110	117	128	136	116	123	134	143	121	129	141	150	125	133	146	155

IDB: Entering Indoor Dry Bulb Temperature
High and low pressures are measured at the liquid and suction service valves.

Shaded area reflects ACCA (TVA) Rating Conditions

kW = Total system power
Amps = Outdoor unit amps (compressor + fan)

Cooling Data — GSZ130241B*/AR*F182416** (cont.)

			Outdoor Ambient Temperature																							
			65ºF				75ºF				85ºF				95ºF				105ºF				115ºF			
			Entering Indoor Wet Bulb Temperature																							
IDB	Airflow		59	63	67	71	59	63	67	71	59	63	67	71	59	63	67	71	59	63	67	71	59	63	67	71
80	900	MBh	23.33	23.84	25.47	27.22	22.79	23.28	24.87	26.59	22.24	22.73	24.28	25.96	21.70	22.17	23.69	25.32	20.62	21.07	22.51	24.06	19.10	19.51	20.85	22.29
		S/T	0.94	0.88	0.72	0.54	1.00	0.91	0.74	0.56	1.00	0.94	0.76	0.57	1.00	0.97	0.79	0.59	1.00	1.00	0.82	0.61	1.00	1.00	0.82	0.62
		ΔT	22	21	19	15	23	22	19	15	23	22	19	15	22	22	19	15	21	22	19	15	20	20	18	14
		KW	1.65	1.69	1.74	1.79	1.78	1.81	1.87	1.93	1.88	1.92	1.98	2.05	1.98	2.02	2.09	2.15	2.06	2.11	2.17	2.24	2.13	2.18	2.25	2.32
		Amps	6.2	6.3	6.5	6.8	6.7	6.8	7.0	7.3	7.2	7.4	7.7	7.9	7.7	7.9	8.2	8.5	8.2	8.4	8.7	9.0	8.7	8.9	9.2	9.6
		Hi Pr	233	251	265	276	261	281	297	310	297	320	338	352	339	364	385	401	381	410	433	452	421	453	478	499
		Lo Pr	106	112	123	131	112	119	130	138	116	123	135	143	122	130	141	151	128	136	148	158	132	140	153	163
	800	MBh	22.6	23.1	24.7	26.4	22.1	22.6	24.2	25.8	21.6	22.1	23.6	25.2	21.1	21.5	**23.0**	24.6	20.0	20.5	21.9	23.4	18.5	18.9	20.2	21.6
		S/T	0.90	0.84	0.68	0.51	0.93	0.87	0.71	0.53	0.95	0.89	0.73	0.54	0.98	0.92	**0.75**	0.56	1.00	0.96	0.78	0.58	1.00	0.96	0.78	0.59
		ΔT	23	22	19	16	24	23	20	16	24	23	20	16	24	23	**20**	16	23	22	20	16	21	21	18	15
		KW	1.64	1.67	1.73	1.78	1.76	1.80	1.85	1.91	1.87	1.91	1.97	2.03	1.96	2.01	**2.07**	2.14	2.04	2.09	2.16	2.23	2.11	2.16	2.23	2.30
		Amps	6.1	6.3	6.5	6.7	6.6	6.8	7.0	7.2	7.2	7.3	7.6	7.9	7.7	7.8	**8.1**	8.4	8.1	8.3	8.6	8.9	8.6	8.8	9.1	9.5
		Hi Pr	231	248	262	273	259	279	294	307	294	317	335	349	335	361	**381**	397	377	406	429	447	417	448	474	494
		Lo Pr	105	111	121	129	110	117	128	137	115	122	133	142	121	128	**140**	149	126	134	147	156	131	139	152	162
	700	MBh	20.9	21.4	22.8	24.4	20.4	20.9	22.3	23.8	19.9	20.4	21.8	23.3	19.4	19.9	21.2	22.7	18.5	18.9	20.2	21.6	17.1	17.5	18.7	20.0
		S/T	0.86	0.81	0.66	0.49	0.90	0.84	0.68	0.51	0.92	0.86	0.70	0.52	0.95	0.89	0.72	0.54	0.98	0.92	0.75	0.56	0.99	0.93	0.76	0.57
		ΔT	24	23	20	16	24	23	20	16	24	23	20	16	24	23	20	16	24	23	20	16	22	21	19	15
		KW	1.60	1.64	1.69	1.74	1.72	1.76	1.81	1.87	1.83	1.86	1.92	1.98	1.92	1.96	2.02	2.08	1.99	2.04	2.10	2.17	2.06	2.11	2.17	2.25
		Amps	6.0	6.1	6.3	6.5	6.4	6.6	6.8	7.0	7.0	7.1	7.4	7.6	7.4	7.6	7.9	8.2	7.9	8.1	8.4	8.7	8.4	8.6	8.9	9.2
		Hi Pr	224	241	254	265	251	270	285	298	286	307	324	338	325	350	370	385	366	394	416	434	404	435	459	479
		Lo Pr	101	108	118	125	107	114	124	132	111	118	129	138	117	124	136	145	123	130	142	152	127	135	147	157
85	900	MBh	23.74	24.19	25.34	27.03	23.18	23.63	24.75	26.40	22.63	23.07	24.16	25.78	22.08	22.51	23.57	25.15	20.98	21.38	22.39	23.89	19.43	19.81	20.74	22.13
		S/T	0.98	0.95	0.86	0.70	1.00	0.98	0.89	0.72	1.00	1.00	0.91	0.74	1.00	1.00	0.94	0.76	1.00	1.00	0.98	0.79	1.00	1.00	0.98	0.80
		ΔT	24	23	22	19	24	24	22	19	23	24	22	19	23	23	23	20	21	22	22	19	20	20	21	18
		KW	1.67	1.70	1.75	1.81	1.79	1.83	1.88	1.94	1.90	1.94	2.00	2.07	2.00	2.04	2.10	2.17	2.08	2.12	2.19	2.26	2.15	2.20	2.27	2.34
		Amps	6.2	6.4	6.6	6.8	6.7	6.9	7.1	7.4	7.3	7.5	7.7	8.0	7.8	8.0	8.2	8.6	8.3	8.5	8.8	9.1	8.8	9.0	9.3	9.7
		Hi Pr	235	253	267	279	264	284	300	313	300	323	341	356	342	368	389	405	385	414	437	456	425	457	483	504
		Lo Pr	107	113	124	132	113	120	131	139	117	125	136	145	123	131	143	152	129	137	150	159	133	142	155	165
	800	MBh	23.0	23.5	24.6	26.2	22.5	22.9	24.0	25.6	22.0	22.4	23.5	25.0	21.4	21.9	22.9	24.4	20.4	20.8	21.7	23.2	18.9	19.2	20.1	21.5
		S/T	0.94	0.91	0.82	0.66	0.97	0.94	0.85	0.69	1.00	0.96	0.87	0.71	1.00	0.99	0.90	0.73	1.00	1.00	0.93	0.76	1.00	1.00	0.94	0.76
		ΔT	25	24	23	20	25	25	23	20	25	25	23	20	25	25	24	20	23	24	23	20	22	22	22	19
		KW	1.65	1.69	1.74	1.79	1.78	1.81	1.87	1.93	1.88	1.92	1.98	2.05	1.98	2.02	2.09	2.15	2.06	2.11	2.17	2.24	2.13	2.18	2.25	2.32
		Amps	6.2	6.3	6.5	6.8	6.7	6.8	7.0	7.3	7.2	7.4	7.7	7.9	7.7	7.9	8.2	8.5	8.2	8.4	8.7	9.0	8.7	8.9	9.2	9.6
		Hi Pr	233	251	265	276	261	281	297	310	297	320	338	352	339	364	385	401	381	410	433	452	421	453	478	499
		Lo Pr	106	112	123	131	112	119	130	138	116	123	135	143	122	130	141	151	128	136	148	158	132	140	153	163
	700	MBh	21.3	21.7	22.7	24.2	20.8	21.2	22.2	23.7	20.3	20.7	21.7	23.1	19.8	20.2	21.1	22.5	18.8	19.2	20.1	21.4	17.4	17.7	18.6	19.8
		S/T	0.91	0.87	0.79	0.64	0.94	0.91	0.82	0.66	0.96	0.93	0.84	0.68	0.99	0.96	0.86	0.70	1.00	0.99	0.90	0.73	1.00	1.00	0.91	0.73
		ΔT	25	25	24	20	26	25	24	21	26	25	24	21	26	25	24	21	25	25	24	20	23	23	22	19
		KW	1.62	1.65	1.70	1.75	1.73	1.77	1.83	1.88	1.84	1.88	1.94	2.00	1.93	1.97	2.04	2.10	2.01	2.05	2.12	2.19	2.08	2.12	2.19	2.26
		Amps	6.0	6.1	6.3	6.6	6.5	6.6	6.9	7.1	7.0	7.2	7.4	7.7	7.5	7.7	7.9	8.2	8.0	8.2	8.5	8.8	8.5	8.7	9.0	9.3
		Hi Pr	226	243	257	268	254	273	288	301	288	310	328	342	328	353	373	389	370	398	420	438	408	439	464	484
		Lo Pr	102	109	119	127	108	115	126	134	112	120	131	139	118	126	137	146	124	132	144	153	128	136	149	158

IDB: Entering Indoor Dry Bulb Temperature

Shaded area reflects AHRI (TVA) Rating Conditions

kW = Total system power

High and low pressures are measured at the liquid and suction service valves.

Amps = Outdoor unit amps (compressor + fan)

			Outdoor Ambient Temperature																							
			65ºF				75ºF				85ºF				95ºF				105ºF				115ºF			
			Entering Indoor Wet Bulb Temperature																							
IDB	Airflow		59	63	67	71	59	63	67	71	59	63	67	71	59	63	67	71	59	63	67	71	59	63	67	71
70	1173	MBh	27.4	28.4	31.1	-	26.8	27.8	30.4	-	26.1	27.1	29.7	-	25.5	26.4	29.0	-	24.2	25.1	27.5	-	22.4	23.3	25.5	-
		S/T	0.76	0.63	0.44	-	0.79	0.66	0.46	-	0.81	0.67	0.47	-	0.83	0.70	0.48	-	0.87	0.72	0.50	-	0.87	0.73	0.51	-
		ΔT	16	14	11	-	17	14	11	-	17	14	11	-	17	14	11	-	16	14	11	-	15	13	10	-
		kW	1.98	2.02	2.08	-	2.13	2.17	2.24	-	2.25	2.30	2.37	-	2.37	2.42	2.49	-	2.46	2.52	2.60	-	2.55	2.60	2.68	-
		Amps	7.8	7.9	8.2	-	8.3	8.5	8.8	-	9.0	9.2	9.5	-	9.6	9.8	10.2	-	10.2	10.5	10.8	-	10.8	11.1	11.4	-
		Hi PR	229	246	260	-	257	276	292	-	292	314	332	-	333	358	378	-	374	403	425	-	413	445	470	-
		Lo PR	107	114	124	-	113	120	131	-	117	125	136	-	123	131	143	-	129	137	150	-	134	142	155	-
	1050	MBh	27.0	28.0	30.7	-	26.4	27.4	30.0	-	25.8	26.7	29.3	-	25.1	26.1	28.5	-	23.9	24.7	27.1	-	22.1	22.9	25.1	-
		S/T	0.73	0.61	0.42	-	0.75	0.63	0.44	-	0.77	0.65	0.45	-	0.80	0.67	0.46	-	0.83	0.69	0.48	-	0.84	0.70	0.48	-
		ΔT	17	15	11	-	17	15	11	-	17	15	11	-	18	15	12	-	17	15	11	-	16	14	11	-
		kW	1.97	2.01	2.07	-	2.12	2.16	2.22	-	2.24	2.29	2.36	-	2.35	2.40	2.48	-	2.45	2.50	2.58	-	2.53	2.59	2.67	-
		Amps	7.7	7.9	8.1	-	8.3	8.5	8.8	-	9.0	9.2	9.5	-	9.6	9.8	10.1	-	10.2	10.4	10.7	-	10.7	11.0	11.3	-
		Hi PR	227	245	258	-	255	274	290	-	290	312	330	-	330	355	375	-	372	400	422	-	411	442	467	-
		Lo PR	106	113	123	-	112	119	130	-	116	124	135	-	122	130	142	-	128	136	149	-	133	141	154	-
	927	MBh	25.7	26.6	29.1	-	25.1	26.0	28.5	-	24.5	25.4	27.8	-	23.9	24.7	27.1	-	22.7	23.5	25.8	-	21.0	21.8	23.9	-
		S/T	0.70	0.58	0.40	-	0.72	0.60	0.42	-	0.74	0.62	0.43	-	0.77	0.64	0.44	-	0.79	0.66	0.46	-	0.80	0.67	0.46	-
		ΔT	18	15	12	-	18	16	12	-	18	16	12	-	18	16	12	-	18	15	12	-	17	14	11	-
		kW	1.94	1.98	2.04	-	2.08	2.13	2.19	-	2.21	2.25	2.32	-	2.32	2.37	2.44	-	2.41	2.46	2.54	-	2.49	2.54	2.62	-
		Amps	7.6	7.8	8.0	-	8.2	8.3	8.6	-	8.8	9.0	9.3	-	9.4	9.6	9.9	-	10.0	10.2	10.5	-	10.5	10.8	11.1	-
		Hi PR	223	240	253	-	250	269	284	-	284	306	323	-	324	348	368	-	364	392	414	-	402	433	457	-
		Lo PR	104	111	121	-	110	117	128	-	114	121	133	-	120	128	139	-	126	134	146	-	130	138	151	-
75	1173	MBh	27.89	28.71	31.08	33.36	27.24	28.05	30.36	32.58	26.59	27.38	29.64	31.81	25.94	26.71	28.91	31.03	24.65	25.38	27.47	29.48	22.83	23.51	25.44	27.31
		S/T	0.86	0.77	0.59	0.38	0.90	0.80	0.61	0.39	0.92	0.82	0.62	0.40	0.95	0.85	0.64	0.41	0.98	0.88	0.67	0.43	0.99	0.89	0.67	0.43
		ΔT	19	17	14	10	19	18	14	10	19	18	14	10	19	18	15	10	19	17	14	10	18	16	13	9
		kW	2.00	2.04	2.10	2.16	2.14	2.19	2.25	2.33	2.27	2.32	2.39	2.47	2.39	2.44	2.51	2.59	2.48	2.54	2.62	2.70	2.57	2.62	2.71	2.79
		Amps	7.8	8.0	8.2	8.5	8.4	8.6	8.9	9.2	9.1	9.3	9.6	10.0	9.7	9.9	10.3	10.6	10.3	10.5	10.9	11.3	10.9	11.2	11.5	11.9
		Hi PR	231	249	263	274	259	279	295	307	295	317	335	350	336	362	382	398	378	407	430	448	418	449	475	495
		Lo PR	108	115	125	133	114	121	132	141	118	126	138	147	124	132	145	154	130	139	151	161	135	144	157	167
	1050	MBh	27.5	28.3	30.6	32.9	26.8	27.6	29.9	32.1	26.2	27.0	29.2	31.3	25.6	**26.3**	28.5	30.6	24.3	25.0	27.1	29.0	22.5	23.2	25.1	26.9
		S/T	0.83	0.74	0.56	0.36	0.86	0.77	0.58	0.37	0.88	0.79	0.60	0.38	0.91	**0.81**	0.61	0.40	0.94	0.84	0.64	0.41	0.95	0.85	0.64	0.41
		ΔT	20	18	15	10	20	19	15	10	20	19	15	11	20	**19**	15	11	20	18	15	10	19	17	14	10
		kW	1.99	2.03	2.09	2.15	2.13	2.18	2.24	2.31	2.26	2.31	2.38	2.45	2.37	**2.42**	2.50	2.58	2.47	2.52	2.60	2.69	2.55	2.61	2.69	2.78
		Amps	7.8	8.0	8.2	8.5	8.4	8.6	8.8	9.1	9.1	9.3	9.6	9.9	9.6	**9.9**	10.2	10.6	10.2	10.5	10.8	11.2	10.8	11.1	11.4	11.9
		Hi PR	230	247	261	272	258	277	293	305	293	315	333	347	334	**359**	379	395	375	404	427	445	415	446	471	492
		Lo PR	107	114	124	133	113	120	131	140	118	125	137	146	124	**131**	144	153	130	138	150	160	134	143	156	166
	927	MBh	26.1	26.9	29.1	31.2	25.5	26.3	28.4	30.5	24.9	25.6	27.7	29.8	24.3	25.00	27.1	29.0	23.1	23.8	25.7	27.6	21.4	22.0	23.8	25.6
		S/T	0.79	0.71	0.54	0.35	0.82	0.73	0.56	0.36	0.84	0.75	0.57	0.37	0.87	0.78	0.59	0.38	0.90	0.81	0.61	0.39	0.91	0.81	0.62	0.40
		ΔT	21	19	15	11	21	19	16	11	21	19	16	11	21	19	16	11	21	19	16	11	19	18	15	10
		kW	1.96	2.00	2.06	2.12	2.10	2.14	2.21	2.28	2.22	2.27	2.34	2.42	2.34	2.38	2.46	2.54	2.43	2.48	2.56	2.64	2.51	2.56	2.65	2.73
		Amps	7.6	7.8	8.1	8.3	8.2	8.4	8.7	9.0	8.9	9.1	9.4	9.7	9.5	9.7	10.0	10.4	10.1	10.3	10.6	11.0	10.6	10.9	11.2	11.6
		Hi PR	225	242	256	267	252	272	287	299	287	309	326	340	327	352	372	388	368	396	418	436	406	437	462	482
		Lo PR	105	112	122	130	111	118	129	137	115	123	134	143	121	129	141	150	127	135	147	157	131	140	152	162

IDB: Entering Indoor Dry Bulb Temperature

Shaded area reflects ACCA (TVA) Rating Conditions

kW = Total system power

High and low pressures are measured at the liquid and suction service valves.

Amps = Outdoor unit amps (compressor + fan)

Cooling Data — GSZ130301A* / AR*F30301** (cont.)

			Outdoor Ambient Temperature																							
			65ºF				75ºF				85ºF				95ºF				105ºF				115ºF			
			Entering Indoor Wet Bulb Temperature																							
IDB	Airflow		59	63	67	71	59	63	67	71	59	63	67	71	59	63	67	71	59	63	67	71	59	63	67	71
80	1173	MBh	28.38	29.00	30.99	33.13	27.72	28.33	30.27	32.36	27.06	27.66	29.55	31.59	26.40	26.98	28.83	30.81	25.08	25.63	27.38	29.27	23.24	23.74	25.37	27.12
		S/T	0.95	0.89	0.72	0.54	0.98	0.92	0.75	0.56	1.00	0.94	0.77	0.57	1.00	0.98	0.79	0.59	1.00	1.00	0.82	0.62	1.00	1.00	0.83	0.62
		ΔT	21	20	18	14	21	20	18	14	21	20	18	14	21	21	18	14	20	20	18	14	18	19	17	13
		kW	2.01	2.05	2.12	2.18	2.16	2.20	2.27	2.34	2.29	2.34	2.41	2.49	2.41	2.46	2.53	2.62	2.50	2.56	2.64	2.72	2.59	2.64	2.73	2.82
		Amps	7.9	8.1	8.3	8.6	8.5	8.7	9.0	9.3	9.2	9.4	9.7	10.1	9.8	10.0	10.3	10.7	10.4	10.6	11.0	11.4	11.0	11.3	11.6	12.0
		Hi PR	234	251	265	277	262	282	298	311	298	321	339	353	339	365	386	402	382	411	434	453	422	454	479	500
		Lo PR	109	116	127	135	115	123	134	142	120	127	139	148	126	134	146	156	132	140	153	163	136	145	158	169
	1050	MBh	28.0	28.6	30.5	32.6	27.3	27.9	29.8	31.9	26.7	27.2	29.1	31.1	26.0	26.6	**28.4**	30.4	24.7	25.3	27.0	28.8	22.9	23.4	25.0	26.7
		S/T	0.91	0.85	0.69	0.52	0.94	0.88	0.72	0.54	0.96	0.90	0.74	0.55	1.00	0.93	**0.76**	0.57	1.00	0.97	0.79	0.59	1.00	0.98	0.80	0.59
		ΔT	22	21	19	15	22	22	19	15	23	22	19	15	23	22	**19**	15	22	21	19	15	20	20	17	14
		kW	2.00	2.04	2.10	2.17	2.15	2.19	2.26	2.33	2.28	2.33	2.40	2.47	2.39	2.44	**2.52**	2.60	2.49	2.54	2.62	2.71	2.57	2.63	2.71	2.80
		Amps	7.8	8.0	8.3	8.6	8.4	8.6	8.9	9.2	9.1	9.3	9.6	10.0	9.7	10.0	**10.3**	10.7	10.3	10.6	10.9	11.3	10.9	11.2	11.5	12.0
		Hi PR	232	250	264	275	260	280	296	308	296	318	336	351	337	363	**383**	399	379	408	431	449	419	451	476	497
		Lo PR	108	115	126	134	114	122	133	141	119	126	138	147	125	133	**145**	154	131	139	152	162	135	144	157	167
	927	MBh	26.6	27.1	29.0	31.0	25.9	26.5	28.3	30.3	25.3	25.9	27.7	29.6	24.7	25.3	27.0	28.8	23.5	24.0	25.6	27.4	21.7	22.2	23.7	25.4
		S/T	0.87	0.82	0.66	0.50	0.90	0.85	0.69	0.51	0.92	0.87	0.71	0.53	0.95	0.89	0.73	0.54	0.99	0.93	0.76	0.56	1.00	0.94	0.76	0.57
		ΔT	23	22	19	15	23	22	19	15	23	22	19	15	23	22	19	16	23	22	19	15	22	21	18	14
		kW	1.97	2.01	2.07	2.13	2.12	2.16	2.22	2.29	2.24	2.29	2.36	2.43	2.35	2.40	2.48	2.56	2.45	2.50	2.58	2.66	2.53	2.59	2.67	2.76
		Amps	7.7	7.9	8.1	8.4	8.3	8.5	8.8	9.1	9.0	9.2	9.5	9.8	9.6	9.8	10.1	10.5	10.2	10.4	10.7	11.1	10.7	11.0	11.3	11.8
		Hi PR	227	245	258	269	255	274	290	302	290	312	330	344	330	355	375	391	372	400	422	440	411	442	467	487
		Lo PR	106	113	123	131	112	119	130	139	116	124	135	144	122	130	142	151	128	136	149	159	133	141	154	164
85	1173	MBh	28.88	29.44	30.83	32.89	28.21	28.76	30.12	32.13	27.54	28.07	29.40	31.36	26.87	27.39	28.68	30.60	25.52	26.02	27.25	29.07	23.64	24.10	25.24	26.93
		S/T	0.99	0.96	0.87	0.70	1.00	0.99	0.90	0.73	1.00	1.00	0.92	0.75	1.00	1.00	0.95	0.77	1.00	1.00	0.99	0.80	1.00	1.00	0.99	0.81
		ΔT	22	22	21	18	22	22	21	18	22	22	21	18	21	21	21	18	20	20	21	18	19	19	20	17
		kW	2.03	2.07	2.13	2.20	2.18	2.22	2.29	2.36	2.31	2.36	2.43	2.51	2.42	2.48	2.55	2.64	2.52	2.58	2.66	2.75	2.61	2.66	2.75	2.84
		Amps	8.0	8.1	8.4	8.7	8.6	8.8	9.0	9.4	9.3	9.5	9.8	10.1	9.9	10.1	10.4	10.8	10.5	10.7	11.1	11.5	11.1	11.4	11.7	12.2
		Hi PR	236	254	268	280	265	285	301	314	301	324	342	357	343	369	390	406	386	415	438	457	426	459	484	505
		Lo PR	110	117	128	136	116	124	135	144	121	129	140	150	127	135	147	157	133	142	155	165	138	146	160	170
	1050	MBh	28.5	29.0	30.4	32.4	27.8	28.3	29.7	31.7	27.1	27.7	29.0	30.9	26.5	27.0	28.3	30.1	25.1	25.6	26.8	28.6	23.3	23.7	24.9	26.5
		S/T	0.95	0.92	0.83	0.67	0.99	0.95	0.86	0.70	1.00	0.98	0.88	0.71	1.00	1.00	0.91	0.74	1.00	1.00	0.94	0.77	1.00	1.00	0.95	0.77
		ΔT	24	23	22	19	24	24	22	19	24	24	22	19	23	24	22	19	22	22	22	19	20	21	21	18
		kW	2.02	2.06	2.12	2.19	2.17	2.21	2.28	2.35	2.30	2.34	2.42	2.49	2.41	2.46	2.54	2.62	2.51	2.56	2.64	2.73	2.59	2.65	2.74	2.82
		Amps	7.9	8.1	8.3	8.6	8.5	8.7	9.0	9.3	9.2	9.4	9.7	10.1	9.8	10.1	10.4	10.7	10.4	10.7	11.0	11.4	11.0	11.3	11.6	12.1
		Hi PR	234	252	266	278	263	283	299	311	299	322	340	354	340	366	387	403	383	412	435	454	423	455	481	502
		Lo PR	109	116	127	135	116	123	134	143	120	128	139	148	126	134	146	156	132	141	153	163	137	145	159	169
	927	MBh	27.0	27.6	28.9	30.8	26.4	26.9	28.2	30.1	25.8	26.3	27.5	29.4	25.1	25.6	26.8	28.6	23.9	24.4	25.5	27.2	22.1	22.6	23.6	25.2
		S/T	0.91	0.88	0.79	0.64	0.94	0.91	0.82	0.67	0.97	0.93	0.84	0.68	1.00	0.96	0.87	0.71	1.00	1.00	0.90	0.73	1.00	1.00	0.91	0.74
		ΔT	24	24	23	20	25	24	23	20	25	24	23	20	25	25	23	20	24	24	23	20	22	22	21	18
		kW	1.99	2.03	2.09	2.15	2.13	2.18	2.24	2.31	2.26	2.31	2.38	2.45	2.37	2.42	2.50	2.58	2.47	2.52	2.60	2.69	2.55	2.61	2.69	2.78
		Amps	7.8	8.0	8.2	8.5	8.4	8.6	8.8	9.1	9.1	9.3	9.6	9.9	9.6	9.9	10.2	10.6	10.2	10.5	10.8	11.2	10.8	11.1	11.4	11.9
		Hi PR	230	247	261	272	258	277	293	305	293	315	333	347	334	359	379	395	375	404	426	445	415	446	471	491
		Lo PR	107	114	124	133	113	120	131	140	118	125	137	146	124	131	144	153	130	138	150	160	134	143	156	166

IDB: Entering Indoor Dry Bulb Temperature

High and low pressures are measured at the liquid and suction service valves.

Shaded area reflects AHRI (TVA) Rating Conditions

kW = Total system power

Amps = Outdoor unit amps (compressor + fan)

			Outdoor Ambient Temperature																							
			65ºF				75ºF				85ºF				95ºF				105ºF				115ºF			
			Entering Indoor Wet Bulb Temperature																							
IDB	Airflow		59	63	67	71	59	63	67	71	59	63	67	71	59	63	67	71	59	63	67	71	59	63	67	71
70	1350	MBh	34.3	35.5	38.9	-	33.5	34.7	38.0	-	32.7	33.9	37.1	-	31.9	33.1	36.2	-	30.3	31.4	34.4	-	28.1	29.1	31.9	-
		S/T	0.75	0.63	0.44	-	0.78	0.65	0.45	-	0.80	0.67	0.46	-	0.83	0.69	0.48	-	0.86	0.72	0.50	-	0.86	0.72	0.50	-
		ΔT	18	15	12	-	18	15	12	-	18	15	12	-	18	16	12	-	18	15	12	-	17	14	11	-
		KW	2.49	2.54	2.62	-	2.68	2.74	2.82	-	2.84	2.91	3.00	-	2.99	3.06	3.16	-	3.12	3.18	3.29	-	3.22	3.30	3.40	-
		Amps	8.6	8.8	9.1	-	9.3	9.5	9.8	-	10.1	10.3	10.7	-	10.8	11.0	11.4	-	11.5	11.7	12.1	-	12.1	12.4	12.8	-
		Hi Pr	238	256	270	-	267	287	303	-	304	327	345	-	346	372	393	-	389	419	442	-	430	463	488	-
		Lo Pr	107	114	124	-	113	120	131	-	118	125	137	-	124	131	144	-	130	138	150	-	134	143	156	-
	1200	MBh	33.3	34.5	37.8	-	32.5	33.7	36.9	-	31.7	32.9	36.1	-	31.0	32.1	35.2	-	29.4	30.5	33.4	-	27.3	28.3	31.0	-
		S/T	0.72	0.60	0.42	-	0.74	0.62	0.43	-	0.76	0.64	0.44	-	0.79	0.66	0.46	-	0.82	0.68	0.47	-	0.82	0.69	0.48	-
		ΔT	18	16	12	-	19	16	12	-	19	16	12	-	19	16	12	-	18	16	12	-	17	15	11	-
		KW	2.47	2.52	2.60	-	2.66	2.71	2.80	-	2.82	2.88	2.97	-	2.97	3.03	3.13	-	3.09	3.16	3.26	-	3.20	3.27	3.38	-
		Amps	8.5	8.7	9.0	-	9.2	9.4	9.7	-	10.0	10.2	10.6	-	10.7	10.9	11.3	-	11.3	11.6	12.0	-	12.0	12.3	12.7	-
		Hi Pr	236	253	268	-	264	284	300	-	301	323	342	-	342	368	389	-	385	414	438	-	426	458	484	-
		Lo Pr	106	113	123	-	112	119	130	-	116	124	135	-	122	130	142	-	128	136	149	-	133	141	154	-
	1050	MBh	30.7	31.9	34.9	-	30.0	31.1	34.1	-	29.3	30.4	33.3	-	28.6	29.6	32.5	-	27.2	28.2	30.8	-	25.2	26.1	28.6	-
		S/T	0.69	0.58	0.40	-	0.72	0.60	0.42	-	0.74	0.61	0.43	-	0.76	0.63	0.44	-	0.79	0.66	0.46	-	0.80	0.66	0.46	-
		ΔT	19	16	12	-	19	16	12	-	19	16	12	-	19	16	12	-	19	16	12	-	18	15	12	-
		KW	2.41	2.46	2.54	-	2.59	2.65	2.73	-	2.75	2.81	2.90	-	2.89	2.96	3.05	-	3.01	3.08	3.18	-	3.12	3.19	3.29	-
		Amps	8.3	8.5	8.8	-	9.0	9.2	9.5	-	9.7	10.0	10.3	-	10.4	10.6	11.0	-	11.0	11.3	11.7	-	11.7	12.0	12.4	-
		Hi Pr	228	246	260	-	256	276	291	-	292	314	331	-	332	357	377	-	374	402	425	-	413	444	469	-
		Lo Pr	103	109	120	-	109	116	126	-	113	120	131	-	119	126	138	-	124	132	144	-	129	137	149	-
75	1350	MBh	34.88	35.91	38.87	41.72	34.07	35.08	37.97	40.75	33.26	34.24	37.06	39.78	32.45	33.41	36.16	38.81	30.82	31.74	34.35	36.87	28.55	29.40	31.82	34.15
		S/T	0.86	0.77	0.58	0.37	0.89	0.79	0.60	0.39	0.91	0.81	0.62	0.40	0.94	0.84	0.64	0.41	0.97	0.87	0.66	0.42	0.98	0.88	0.67	0.43
		ΔT	20	19	15	11	21	19	16	11	21	19	16	11	21	19	16	11	20	19	15	11	19	18	14	10
		KW	2.51	2.56	2.64	2.73	2.70	2.76	2.84	2.94	2.87	2.93	3.02	3.12	3.02	3.08	3.18	3.29	3.14	3.21	3.32	3.43	3.25	3.32	3.43	3.55
		Amps	8.7	8.9	9.2	9.5	9.4	9.6	9.9	10.3	10.2	10.4	10.8	11.2	10.9	11.1	11.5	11.9	11.6	11.8	12.2	12.7	12.2	12.5	13.0	13.4
		Hi Pr	240	259	273	285	270	290	306	320	307	330	349	364	349	376	397	414	393	423	447	466	434	467	493	515
		Lo Pr	108	115	126	134	114	122	133	141	119	126	138	147	125	133	145	154	131	139	152	162	135	144	157	167
	1200	MBh	33.9	34.9	37.7	40.5	33.1	34.1	36.9	39.6	32.3	33.2	36.0	38.6	31.5	**32.4**	35.1	37.7	29.9	30.8	33.3	35.8	27.7	28.5	30.9	33.2
		S/T	0.82	0.73	0.55	0.36	0.85	0.76	0.57	0.37	0.87	0.78	0.59	0.38	0.90	**0.80**	0.61	0.39	0.93	0.83	0.63	0.40	0.94	0.84	0.63	0.41
		ΔT	21	20	16	11	21	20	16	11	21	20	16	11	22	**20**	16	11	21	20	16	11	20	18	15	10
		KW	2.49	2.54	2.62	2.70	2.68	2.74	2.82	2.91	2.85	2.91	3.00	3.10	2.99	**3.06**	3.16	3.26	3.12	3.19	3.29	3.40	3.22	3.30	3.40	3.52
		Amps	8.6	8.8	9.1	9.4	9.3	9.5	9.8	10.2	10.1	10.3	10.7	11.1	10.8	**11.0**	11.4	11.8	11.5	11.7	12.1	12.6	12.1	12.4	12.8	13.3
		Hi Pr	238	256	270	282	267	287	303	316	304	327	345	360	346	**372**	393	410	389	419	442	461	430	463	489	510
		Lo Pr	107	114	124	133	113	120	131	140	118	125	137	146	124	**131**	144	153	130	138	150	160	134	143	156	166
	1050	MBh	31.3	32.2	34.8	37.4	30.5	31.4	34.0	36.5	29.8	30.7	33.2	35.6	29.1	29.9	32.4	34.8	27.6	28.4	30.8	33.0	25.6	26.3	28.5	30.6
		S/T	0.79	0.70	0.53	0.34	0.82	0.73	0.55	0.36	0.84	0.75	0.57	0.36	0.86	0.77	0.58	0.38	0.90	0.80	0.61	0.39	0.90	0.81	0.61	0.39
		ΔT	22	20	16	11	22	20	16	11	22	20	16	11	22	20	17	11	22	20	16	11	20	19	15	11
		KW	2.43	2.48	2.56	2.64	2.61	2.67	2.75	2.84	2.78	2.84	2.93	3.02	2.92	2.98	3.08	3.18	3.04	3.11	3.21	3.31	3.14	3.21	3.32	3.43
		Amps	8.4	8.6	8.9	9.2	9.0	9.3	9.6	9.9	9.8	10.0	10.4	10.8	10.5	10.7	11.1	11.5	11.1	11.4	11.8	12.2	11.8	12.1	12.5	13.0
		Hi Pr	231	248	262	274	259	279	294	307	295	317	335	349	335	361	381	398	377	406	429	447	417	449	474	494
		Lo Pr	104	111	121	129	110	117	128	136	114	121	133	141	120	128	139	148	126	134	146	155	130	138	151	161

IDB: Entering Indoor Dry Bulb Temperature

Shaded area reflects ACCA (TVA) Rating Conditions

kW = Total system power

High and low pressures are measured at the liquid and suction service valves.

Amps = Outdoor unit amps (compressor + fan)

Cooling Data — GSZ130361B* / AR*F364216** (cont.)

			Outdoor Ambient Temperature																							
			65ºF				75ºF				85ºF				95ºF				105ºF				115ºF			
			Entering Indoor Wet Bulb Temperature																							
IDB	Airflow		59	63	67	71	59	63	67	71	59	63	67	71	59	63	67	71	59	63	67	71	59	63	67	71
80	1350	MBh	35.50	36.27	38.75	41.43	34.67	35.43	37.85	40.46	33.85	34.59	36.95	39.50	33.02	33.74	36.05	38.54	31.37	32.06	34.25	36.61	29.06	29.69	31.72	33.91
		S/T	0.94	0.88	0.72	0.54	1.00	0.91	0.74	0.56	1.00	0.94	0.76	0.57	1.00	0.97	0.79	0.59	1.00	1.00	0.82	0.61	1.00	1.00	0.82	0.62
		ΔT	23	22	19	15	24	22	19	15	23	22	19	15	22	22	19	15	21	22	19	15	20	20	18	14
		KW	2.53	2.58	2.66	2.75	2.72	2.78	2.87	2.96	2.89	2.95	3.05	3.15	3.04	3.11	3.21	3.32	3.17	3.24	3.35	3.46	3.28	3.35	3.46	3.58
		Amps	8.8	9.0	9.3	9.6	9.5	9.7	10.0	10.4	10.3	10.5	10.9	11.3	11.0	11.2	11.6	12.0	11.7	12.0	12.3	12.8	12.4	12.7	13.1	13.6
		Hi Pr	243	261	276	288	272	293	310	323	310	333	352	367	353	380	401	418	397	427	451	470	439	472	498	520
		Lo Pr	109	116	127	135	116	123	134	143	120	128	139	148	126	134	146	156	132	141	153	163	137	145	159	169
	1200	MBh	34.5	35.2	37.6	40.2	33.7	34.4	36.8	39.3	32.9	33.6	35.9	38.4	32.1	32.8	**35.0**	37.4	30.5	31.1	33.3	35.5	28.2	28.8	30.8	32.9
		S/T	0.90	0.84	0.68	0.51	0.93	0.87	0.71	0.53	0.95	0.89	0.73	0.54	0.98	0.92	**0.75**	0.56	1.00	0.96	0.78	0.58	1.00	0.96	0.78	0.59
		ΔT	24	23	20	16	24	23	20	16	24	23	20	16	24	23	**20**	16	23	23	20	16	22	21	19	15
		KW	2.51	2.56	2.64	2.73	2.70	2.76	2.85	2.94	2.87	2.93	3.02	3.12	3.02	3.08	**3.18**	3.29	3.14	3.21	3.32	3.43	3.25	3.32	3.43	3.55
		Amps	8.7	8.9	9.2	9.5	9.4	9.6	9.9	10.3	10.2	10.4	10.8	11.2	10.9	11.1	**11.5**	11.9	11.6	11.8	12.2	12.7	12.2	12.5	13.0	13.4
		Hi Pr	240	259	273	285	270	290	306	320	307	330	349	364	349	376	**397**	414	393	423	447	466	434	467	493	515
		Lo Pr	108	115	126	134	114	122	133	141	119	126	138	147	125	133	**145**	154	131	139	152	162	135	144	157	167
	1050	MBh	31.8	32.5	34.7	37.1	31.1	31.7	33.9	36.3	30.3	31.0	33.1	35.4	29.6	30.2	32.3	34.5	28.1	28.7	30.7	32.8	26.0	26.6	28.4	30.4
		S/T	0.86	0.81	0.66	0.49	0.89	0.84	0.68	0.51	0.92	0.86	0.70	0.52	0.95	0.89	0.72	0.54	0.98	0.92	0.75	0.56	0.99	0.93	0.76	0.57
		ΔT	24	23	20	16	24	23	20	16	24	23	20	16	25	24	20	16	24	23	20	16	23	22	19	15
		KW	2.45	2.50	2.58	2.66	2.64	2.69	2.78	2.87	2.80	2.86	2.95	3.05	2.94	3.01	3.10	3.21	3.06	3.13	3.23	3.34	3.17	3.24	3.35	3.46
		Amps	8.5	8.7	8.9	9.3	9.1	9.3	9.6	10.0	9.9	10.1	10.5	10.9	10.6	10.8	11.2	11.6	11.2	11.5	11.9	12.3	11.9	12.2	12.6	13.1
		Hi Pr	233	251	265	276	262	282	297	310	298	320	338	353	339	365	385	402	381	410	433	452	421	453	479	499
		Lo Pr	105	112	122	130	111	118	129	137	115	123	134	143	121	129	141	150	127	135	147	157	131	140	152	162
85	1350	MBh	36.12	36.82	38.56	41.14	35.28	35.96	37.66	40.18	34.44	35.11	36.77	39.22	33.60	34.25	35.87	38.27	31.92	32.54	34.08	36.35	29.57	30.14	31.57	33.68
		S/T	0.98	0.95	0.86	0.70	1.00	0.98	0.89	0.72	1.00	1.00	0.91	0.74	1.00	1.00	0.94	0.76	1.00	1.00	0.98	0.79	1.00	1.00	0.98	0.80
		ΔT	24	24	23	19	24	24	23	20	23	24	23	20	23	23	23	20	22	22	23	20	20	21	21	18
		KW	2.55	2.60	2.68	2.77	2.74	2.80	2.89	2.99	2.91	2.98	3.07	3.18	3.07	3.13	3.24	3.34	3.20	3.27	3.37	3.49	3.31	3.38	3.49	3.61
		Amps	8.8	9.1	9.3	9.7	9.5	9.8	10.1	10.5	10.4	10.6	11.0	11.4	11.1	11.3	11.7	12.2	11.8	12.1	12.5	12.9	12.5	12.8	13.2	13.7
		Hi Pr	245	264	279	291	275	296	313	326	313	337	356	371	356	384	405	422	401	431	456	475	443	477	503	525
		Lo Pr	110	117	128	137	117	124	135	144	121	129	141	150	127	135	148	158	133	142	155	165	138	147	160	171
	1200	MBh	35.1	35.7	37.4	39.9	34.3	34.9	36.6	39.0	33.4	34.1	35.7	38.1	32.6	33.3	34.8	37.2	31.0	31.6	33.1	35.3	28.7	29.3	30.6	32.7
		S/T	0.94	0.91	0.82	0.66	0.97	0.94	0.85	0.69	1.00	0.96	0.87	0.70	1.00	0.99	0.90	0.73	1.00	1.00	0.93	0.76	1.00	1.00	0.94	0.76
		ΔT	25	25	23	20	26	25	24	21	26	25	24	21	25	25	24	21	24	24	24	20	22	22	22	19
		KW	2.53	2.58	2.66	2.75	2.72	2.78	2.87	2.96	2.89	2.95	3.05	3.15	3.04	3.11	3.21	3.32	3.17	3.24	3.35	3.46	3.28	3.35	3.46	3.58
		Amps	8.8	9.0	9.3	9.6	9.5	9.7	10.0	10.4	10.3	10.5	10.9	11.3	11.0	11.2	11.6	12.0	11.7	12.0	12.3	12.8	12.4	12.7	13.1	13.6
		Hi Pr	243	261	276	288	272	293	310	323	310	333	352	367	353	380	401	418	397	427	451	470	439	472	498	520
		Lo Pr	109	116	127	135	116	123	134	143	120	128	139	148	126	134	146	156	132	141	153	163	137	145	159	169
	1050	MBh	32.4	33.0	34.6	36.9	31.6	32.2	33.8	36.0	30.9	31.5	32.9	35.1	30.1	30.7	32.1	34.3	28.6	29.2	30.5	32.6	26.5	27.0	28.3	30.2
		S/T	0.91	0.87	0.79	0.64	0.94	0.91	0.82	0.66	0.96	0.93	0.84	0.68	0.99	0.96	0.86	0.70	1.00	0.99	0.90	0.73	1.00	1.00	0.91	0.73
		ΔT	26	25	24	21	26	26	24	21	26	26	24	21	26	26	24	21	25	25	24	21	23	24	22	19
		KW	2.47	2.52	2.60	2.68	2.66	2.71	2.80	2.89	2.82	2.88	2.97	3.07	2.97	3.03	3.13	3.23	3.09	3.16	3.26	3.37	3.20	3.27	3.38	3.49
		Amps	8.5	8.7	9.0	9.3	9.2	9.4	9.7	10.1	10.0	10.2	10.6	11.0	10.7	10.9	11.3	11.7	11.3	11.6	12.0	12.5	12.0	12.3	12.7	13.2
		Hi Pr	235	253	268	279	264	284	300	313	301	323	341	356	342	368	389	406	385	414	438	456	425	458	483	504
		Lo Pr	106	113	123	131	112	119	130	139	116	124	135	144	122	130	142	151	128	136	149	159	133	141	154	164

IDB: Entering Indoor Dry Bulb Temperature

High and low pressures are measured at the liquid and suction service valves.

Shaded area reflects AHRI (TVA) Rating Conditions

kW = Total system power

Amps = Outdoor unit amps (compressor + fan)

			Outdoor Ambient Temperature																							
			65ºF				75ºF				85ºF				95ºF				105ºF				115ºF			
			Entering Indoor Wet Bulb Temperature																							
IDB	Airflow		59	63	67	71	59	63	67	71	59	63	67	71	59	63	67	71	59	63	67	71	59	63	67	71
70	1519	MBh	39.7	41.1	45.1	-	38.8	40.2	44.0	-	37.8	39.2	43.0	-	36.9	38.3	41.9	-	35.1	36.4	39.8	-	32.5	33.7	36.9	-
		S/T	0.74	0.62	0.43	-	0.77	0.64	0.45	-	0.79	0.66	0.46	-	0.82	0.68	0.47	-	0.85	0.71	0.49	-	0.85	0.71	0.49	-
		ΔT	18	15	12	-	18	16	12	-	18	16	12	-	18	16	12	-	18	16	12	-	17	15	11	-
		kW	2.89	2.95	3.04	-	3.10	3.17	3.27	-	3.29	3.36	3.47	-	3.46	3.54	3.65	-	3.60	3.68	3.80	-	3.73	3.81	3.93	-
		Amps	10.3	10.5	10.9	-	11.1	11.4	11.8	-	12.1	12.4	12.8	-	13.0	13.3	13.8	-	13.8	14.2	14.7	-	14.7	15.1	15.6	-
		Hi PR	218	234	247	-	244	263	277	-	278	299	315	-	316	340	359	-	356	383	404	-	393	423	447	-
		Lo PR	107	114	124	-	113	120	131	-	118	125	137	-	124	131	144	-	130	138	150	-	134	143	156	-
	1350	MBh	38.5	39.9	43.8	-	37.6	39.0	42.7	-	36.7	38.1	41.7	-	35.8	37.1	40.7	-	34.1	35.3	38.7	-	31.5	32.7	35.8	-
		S/T	0.71	0.59	0.41	-	0.73	0.61	0.43	-	0.75	0.63	0.44	-	0.78	0.65	0.45	-	0.81	0.67	0.47	-	0.81	0.68	0.47	-
		ΔT	19	16	12	-	19	16	12	-	19	16	12	-	19	16	12	-	19	16	12	-	17	15	11	-
		kW	2.87	2.93	3.02	-	3.08	3.14	3.24	-	3.27	3.34	3.44	-	3.43	3.51	3.62	-	3.57	3.65	3.77	-	3.70	3.78	3.90	-
		Amps	10.2	10.4	10.8	-	11.0	11.3	11.7	-	12.0	12.3	12.7	-	12.9	13.2	13.6	-	13.7	14.1	14.5	-	14.6	14.9	15.4	-
		Hi PR	215	232	245	-	242	260	275	-	275	296	312	-	313	337	356	-	352	379	400	-	389	419	442	-
		Lo PR	106	113	123	-	112	119	130	-	116	124	135	-	122	130	142	-	128	136	149	-	133	141	154	-
	1181	MBh	35.6	36.9	40.4	-	34.7	36.0	39.4	-	33.9	35.1	38.5	-	33.1	34.3	37.6	-	31.4	32.6	35.7	-	29.1	30.2	33.1	-
		S/T	0.68	0.57	0.40	-	0.71	0.59	0.41	-	0.73	0.61	0.42	-	0.75	0.63	0.43	-	0.78	0.65	0.45	-	0.78	0.66	0.45	-
		ΔT	19	16	12	-	19	17	13	-	19	17	13	-	19	17	13	-	19	16	13	-	18	15	12	-
		kW	2.80	2.86	2.94	-	3.01	3.07	3.17	-	3.19	3.26	3.36	-	3.35	3.42	3.53	-	3.49	3.56	3.68	-	3.61	3.68	3.80	-
		Amps	9.9	10.1	10.5	-	10.7	11.0	11.3	-	11.7	12.0	12.4	-	12.5	12.8	13.2	-	13.3	13.7	14.1	-	14.1	14.5	15.0	-
		Hi PR	209	225	237	-	234	252	266	-	267	287	303	-	304	327	345	-	342	368	388	-	377	406	429	-
		Lo PR	103	109	120	-	109	116	126	-	113	120	131	-	119	126	138	-	124	132	144	-	129	137	149	-
75	1519	MBh	40.36	41.55	44.98	48.27	39.42	40.59	43.93	47.15	38.48	39.62	42.89	46.03	37.54	38.65	41.84	44.91	35.67	36.72	39.75	42.66	33.04	34.02	36.82	39.52
		S/T	0.84	0.76	0.57	0.37	0.88	0.78	0.59	0.38	0.90	0.80	0.61	0.39	0.93	0.83	0.63	0.40	0.96	0.86	0.65	0.42	0.97	0.87	0.66	0.42
		ΔT	21	19	16	11	21	19	16	11	21	19	16	11	21	19	16	11	21	19	16	11	19	18	15	10
		kW	2.91	2.97	3.06	3.16	3.13	3.19	3.29	3.40	3.32	3.39	3.50	3.61	3.49	3.57	3.68	3.80	3.63	3.71	3.83	3.96	3.76	3.84	3.97	4.10
		Amps	10.4	10.6	11.0	11.4	11.2	11.5	11.9	12.4	12.2	12.5	13.0	13.5	13.1	13.4	13.9	14.4	14.0	14.3	14.8	15.4	14.8	15.2	15.7	16.4
		Hi PR	220	236	250	260	247	265	280	292	280	302	319	332	319	344	363	379	359	387	408	426	397	427	451	471
		Lo PR	108	115	126	134	114	122	133	141	119	126	138	147	125	133	145	154	131	139	152	162	135	144	157	167
	1350	MBh	39.2	40.3	43.7	46.9	38.3	39.4	42.7	45.8	37.4	38.5	41.6	44.7	36.5	**37.5**	40.6	43.6	34.6	35.7	38.6	41.4	32.1	33.0	35.7	38.4
		S/T	0.81	0.72	0.55	0.35	0.84	0.75	0.57	0.36	0.86	0.77	0.58	0.37	0.88	**0.79**	0.60	0.38	0.92	0.82	0.62	0.40	0.93	0.83	0.63	0.40
		ΔT	22	20	16	11	22	20	16	11	22	20	16	11	22	**20**	17	11	22	20	16	11	20	19	15	11
		kW	2.89	2.95	3.04	3.13	3.10	3.17	3.27	3.37	3.29	3.36	3.47	3.58	3.46	**3.54**	3.65	3.77	3.60	3.68	3.80	3.93	3.73	3.81	3.93	4.06
		Amps	10.3	10.5	10.9	11.3	11.1	11.4	11.8	12.2	12.1	12.4	12.8	13.3	13.0	**13.3**	13.8	14.3	13.8	14.2	14.7	15.3	14.7	15.1	15.6	16.2
		Hi PR	218	234	247	258	244	263	277	289	278	299	316	329	316	**340**	359	375	356	383	404	422	393	423	447	466
		Lo PR	107	114	124	133	113	120	131	140	118	125	137	146	124	**131**	144	153	130	138	150	160	134	143	156	166
	1181	MBh	36.2	37.2	40.3	43.3	35.3	36.4	39.4	42.3	34.5	35.5	38.4	41.2	33.6	34.64	37.5	40.2	32.0	32.9	35.6	38.2	29.6	30.5	33.0	35.4
		S/T	0.78	0.69	0.53	0.34	0.81	0.72	0.55	0.35	0.83	0.74	0.56	0.36	0.85	0.76	0.58	0.37	0.88	0.79	0.60	0.39	0.89	0.80	0.60	0.39
		ΔT	22	20	16	11	22	20	17	12	22	20	17	12	22	21	17	12	22	20	17	11	21	19	16	11
		kW	2.82	2.88	2.97	3.06	3.03	3.09	3.19	3.29	3.22	3.28	3.39	3.50	3.38	3.45	3.56	3.68	3.52	3.59	3.71	3.83	3.64	3.71	3.84	3.96
		Amps	10.0	10.2	10.6	11.0	10.8	11.1	11.5	11.9	11.8	12.1	12.5	13.0	12.6	12.9	13.4	13.9	13.4	13.8	14.3	14.8	14.3	14.6	15.1	15.7
		Hi PR	211	227	240	250	237	255	269	281	269	290	306	319	307	330	349	364	345	371	392	409	381	410	433	452
		Lo PR	104	111	121	129	110	117	128	136	114	121	133	141	120	128	139	148	126	134	146	155	130	138	151	161

IDB: Entering Indoor Dry Bulb Temperature

High and low pressures are measured at the liquid and suction service valves.

Shaded area reflects ACCA (TVA) Rating Conditions

kW = Total system power

Amps = Outdoor unit amps (compressor + fan)

Cooling Data — GSZ130421A*/AR*F364216** (cont.)

			Outdoor Ambient Temperature																							
			65ºF				75ºF				85ºF				95ºF				105ºF				115ºF			
			Entering Indoor Wet Bulb Temperature																							
IDB	Airflow		59	63	67	71	59	63	67	71	59	63	67	71	59	63	67	71	59	63	67	71	59	63	67	71
80	1519	MBh	41.08	41.97	44.84	47.94	40.12	41.00	43.80	46.82	39.17	40.02	42.76	45.71	38.21	39.05	41.72	44.59	36.30	37.09	39.63	42.36	33.63	34.36	36.71	39.24
		S/T	0.93	0.87	0.71	0.53	0.96	0.90	0.73	0.55	1.00	0.92	0.75	0.56	1.00	0.95	0.78	0.58	1.00	1.00	0.81	0.60	1.00	1.00	0.81	0.61
		ΔT	23	22	19	15	23	22	19	16	24	22	19	16	23	23	20	16	22	22	19	15	20	21	18	14
		kW	2.93	3.00	3.09	3.18	3.15	3.22	3.32	3.43	3.35	3.42	3.53	3.64	3.52	3.59	3.71	3.83	3.66	3.74	3.87	3.99	3.79	3.87	4.00	4.13
		Amps	10.4	10.7	11.1	11.5	11.3	11.6	12.0	12.5	12.3	12.7	13.1	13.6	13.2	13.6	14.0	14.6	14.1	14.5	15.0	15.6	15.0	15.4	15.9	16.5
		Hi PR	222	239	252	263	249	268	283	295	283	305	322	336	323	347	367	382	363	391	412	430	401	432	456	475
		Lo PR	109	116	127	135	116	123	134	143	120	128	139	148	126	134	146	156	132	141	153	163	137	145	159	169
	1350	MBh	39.9	40.8	43.5	46.5	39.0	39.8	42.5	45.5	38.0	38.9	41.5	44.4	37.1	37.9	**40.5**	43.3	35.2	36.0	38.5	41.1	32.6	33.4	35.6	38.1
		S/T	0.88	0.83	0.67	0.50	0.92	0.86	0.70	0.52	0.94	0.88	0.72	0.54	0.97	0.91	**0.74**	0.55	1.00	0.94	0.77	0.57	1.00	0.95	0.77	0.58
		ΔT	24	23	20	16	24	23	20	16	24	23	20	16	24	23	**20**	16	24	23	20	16	22	22	19	15
		kW	2.91	2.97	3.06	3.16	3.13	3.19	3.29	3.40	3.32	3.39	3.50	3.61	3.49	3.57	**3.68**	3.80	3.63	3.71	3.83	3.96	3.76	3.84	3.97	4.10
		Amps	10.4	10.6	11.0	11.4	11.2	11.5	11.9	12.4	12.2	12.5	13.0	13.5	13.1	13.4	**13.9**	14.4	14.0	14.3	14.8	15.4	14.8	15.2	15.7	16.4
		Hi PR	220	237	250	260	247	265	280	292	280	302	319	332	319	344	**363**	379	359	387	408	426	397	427	451	471
		Lo PR	108	115	126	134	114	122	133	141	119	126	138	147	125	133	**145**	154	131	139	152	162	135	144	157	167
	1181	MBh	36.8	37.6	40.2	43.0	36.0	36.7	39.3	42.0	35.1	35.9	38.3	41.0	34.2	35.0	37.4	40.0	32.5	33.2	35.5	38.0	30.1	30.8	32.9	35.2
		S/T	0.85	0.80	0.65	0.49	0.88	0.83	0.67	0.50	0.91	0.85	0.69	0.52	0.93	0.88	0.71	0.53	0.97	0.91	0.74	0.55	0.98	0.92	0.75	0.56
		ΔT	24	23	20	16	25	24	21	16	25	24	21	16	25	24	21	17	25	24	20	16	23	22	19	15
		kW	2.84	2.90	2.99	3.08	3.06	3.12	3.22	3.32	3.24	3.31	3.41	3.52	3.41	3.48	3.59	3.71	3.55	3.62	3.74	3.86	3.67	3.75	3.87	3.99
		Amps	10.1	10.3	10.7	11.1	10.9	11.2	11.6	12.0	11.9	12.2	12.6	13.1	12.7	13.1	13.5	14.0	13.6	13.9	14.4	15.0	14.4	14.8	15.3	15.9
		Hi PR	213	229	242	253	239	257	272	284	272	293	309	322	310	333	352	367	349	375	396	413	385	414	438	456
		Lo PR	105	112	122	130	111	118	129	137	115	123	134	143	121	129	141	150	127	135	147	157	131	140	152	162
85	1519	MBh	41.79	42.60	44.62	47.60	40.82	41.61	43.58	46.50	39.85	40.62	42.54	45.39	38.88	39.63	41.51	44.28	36.93	37.65	39.43	42.07	34.21	34.88	36.53	38.97
		S/T	0.97	0.94	0.85	0.69	1.00	0.97	0.88	0.71	1.00	1.00	0.90	0.73	1.00	1.00	0.93	0.75	1.00	1.00	0.96	0.78	1.00	1.00	0.97	0.79
		ΔT	25	24	23	20	25	24	23	20	24	24	23	20	24	24	23	20	22	23	23	20	21	21	21	19
		kW	2.96	3.02	3.11	3.21	3.18	3.25	3.35	3.45	3.37	3.45	3.56	3.67	3.55	3.62	3.74	3.86	3.69	3.77	3.90	4.03	3.82	3.90	4.03	4.17
		Amps	10.5	10.8	11.2	11.6	11.4	11.7	12.1	12.6	12.5	12.8	13.2	13.7	13.4	13.7	14.2	14.7	14.2	14.6	15.1	15.7	15.1	15.5	16.0	16.7
		Hi PR	224	241	255	266	252	271	286	298	286	308	325	339	326	351	370	386	367	395	417	434	405	436	460	480
		Lo PR	110	117	128	137	117	124	135	144	121	129	141	150	127	135	148	158	133	142	155	165	138	147	160	171
	1350	MBh	40.6	41.4	43.3	46.2	39.6	40.4	42.3	45.1	38.7	39.4	41.3	44.1	37.7	38.5	40.3	43.0	35.9	36.6	38.3	40.8	33.2	33.9	35.5	37.8
		S/T	0.93	0.89	0.81	0.65	0.96	0.93	0.84	0.68	0.98	0.95	0.86	0.70	1.00	0.98	0.89	0.72	1.00	1.00	0.92	0.75	1.00	1.00	0.93	0.75
		ΔT	26	25	24	21	26	25	24	21	26	26	24	21	26	26	24	21	24	25	24	21	23	23	22	19
		kW	2.93	3.00	3.09	3.18	3.15	3.22	3.32	3.43	3.35	3.42	3.53	3.64	3.52	3.59	3.71	3.83	3.66	3.74	3.87	3.99	3.79	3.87	4.00	4.13
		Amps	10.4	10.7	11.1	11.5	11.3	11.6	12.0	12.5	12.3	12.7	13.1	13.6	13.2	13.6	14.0	14.6	14.1	14.5	15.0	15.6	15.0	15.4	15.9	16.5
		Hi PR	222	239	252	263	249	268	283	295	283	305	322	336	323	347	367	382	363	391	412	430	401	432	456	475
		Lo PR	109	116	127	135	116	123	134	143	120	128	139	148	126	134	146	156	132	141	153	163	137	145	159	169
	1181	MBh	37.5	38.2	40.0	42.7	36.6	37.3	39.1	41.7	35.7	36.4	38.1	40.7	34.8	35.5	37.2	39.7	33.1	33.7	35.3	37.7	30.7	31.3	32.7	34.9
		S/T	0.89	0.86	0.78	0.63	0.93	0.89	0.81	0.65	0.95	0.92	0.83	0.67	0.98	0.95	0.85	0.69	1.00	0.98	0.89	0.72	1.00	0.99	0.89	0.72
		ΔT	26	26	24	21	26	26	25	21	26	26	25	21	27	26	25	21	26	26	24	21	24	24	23	20
		kW	2.87	2.93	3.01	3.11	3.08	3.14	3.24	3.34	3.27	3.34	3.44	3.55	3.43	3.51	3.62	3.74	3.57	3.65	3.77	3.89	3.70	3.78	3.90	4.03
		Amps	10.2	10.4	10.8	11.2	11.0	11.3	11.7	12.1	12.0	12.3	12.7	13.2	12.9	13.2	13.6	14.2	13.7	14.1	14.5	15.1	14.5	14.9	15.4	16.0
		Hi PR	215	232	245	255	242	260	275	286	275	296	312	326	313	337	356	371	352	379	400	417	389	419	442	461
		Lo PR	106	113	123	131	112	119	130	139	116	124	135	144	122	130	142	151	128	136	149	159	133	141	154	164

IDB: Entering Indoor Dry Bulb Temperature

Shaded area reflects AHRI (TVA) Rating Conditions

kW = Total system power

High and low pressures are measured at the liquid and suction service valves.

Amps = Outdoor unit amps (compressor + fan)

			Outdoor Ambient Temperature																							
			65ºF				75ºF				85ºF				95ºF				105ºF				115ºF			
			Entering Indoor Wet Bulb Temperature																							
IDB	Airflow		59	63	67	71	59	63	67	71	59	63	67	71	59	63	67	71	59	63	67	71	59	63	67	71
70	1800	MBh	45.1	46.7	51.2	-	44.0	45.6	50.0	-	43.0	44.5	48.8	-	41.9	43.5	47.6	-	39.8	41.3	45.2	-	36.9	38.2	41.9	-
		S/T	0.76	0.63	0.44	-	0.79	0.66	0.46	-	0.81	0.67	0.47	-	0.83	0.70	0.48	-	0.86	0.72	0.50	-	0.87	0.73	0.50	-
		ΔT	17	15	11	-	18	15	12	-	18	15	12	-	18	15	12	-	18	15	12	-	16	14	11	-
		kW	3.33	3.39	3.48	-	3.55	3.62	3.72	-	3.75	3.82	3.93	-	3.92	4.00	4.12	-	4.07	4.15	4.28	-	4.20	4.28	4.41	-
		Amps	11.8	12.1	12.5	-	12.7	13.0	13.5	-	13.8	14.2	14.6	-	14.8	15.2	15.7	-	15.7	16.1	16.7	-	16.7	17.1	17.7	-
		Hi PR	234	252	266	-	262	282	298	-	298	321	339	-	340	366	386	-	382	411	434	-	422	454	480	-
		Lo PR	111	118	129	-	117	125	136	-	122	129	141	-	128	136	148	-	134	143	156	-	139	147	161	-
	1600	MBh	43.8	45.4	49.7	-	42.7	44.3	48.5	-	41.7	43.2	47.4	-	40.7	42.2	46.2	-	38.7	40.1	43.9	-	35.8	37.1	40.7	-
		S/T	0.72	0.60	0.42	-	0.75	0.63	0.43	-	0.77	0.64	0.45	-	0.79	0.66	0.46	-	0.82	0.69	0.48	-	0.83	0.69	0.48	-
		ΔT	18	16	12	-	18	16	12	-	18	16	12	-	19	16	12	-	18	16	12	-	17	15	11	-
		kW	3.31	3.37	3.46	-	3.53	3.59	3.70	-	3.72	3.79	3.90	-	3.89	3.97	4.09	-	4.04	4.12	4.24	-	4.17	4.25	4.38	-
		Amps	11.7	12.0	12.3	-	12.6	12.9	13.4	-	13.7	14.0	14.5	-	14.7	15.0	15.5	-	15.6	16.0	16.5	-	16.5	16.9	17.5	-
		Hi PR	231	249	263	-	260	279	295	-	295	318	336	-	336	362	382	-	378	407	430	-	418	450	475	-
		Lo PR	110	117	127	-	116	123	135	-	120	128	140	-	127	135	147	-	133	141	154	-	137	146	159	-
	1400	MBh	40.4	41.9	45.9	-	39.5	40.9	44.8	-	38.5	39.9	43.7	-	37.6	38.9	42.7	-	35.7	37.0	40.5	-	33.1	34.3	37.5	-
		S/T	0.70	0.58	0.40	-	0.72	0.60	0.42	-	0.74	0.62	0.43	-	0.77	0.64	0.44	-	0.79	0.66	0.46	-	0.80	0.67	0.46	-
		ΔT	19	16	12	-	19	16	12	-	19	16	12	-	19	16	12	-	19	16	12	-	17	15	11	-
		kW	3.24	3.30	3.39	-	3.45	3.52	3.62	-	3.64	3.71	3.82	-	3.81	3.88	4.00	-	3.95	4.03	4.15	-	4.07	4.15	4.28	-
		Amps	11.4	11.6	12.0	-	12.3	12.6	13.0	-	13.3	13.7	14.1	-	14.3	14.6	15.1	-	15.2	15.5	16.1	-	16.1	16.5	17.0	-
		Hi PR	224	242	255	-	252	271	286	-	286	308	326	-	326	351	371	-	367	395	417	-	406	436	461	-
		Lo PR	106	113	124	-	112	120	131	-	117	124	136	-	123	131	143	-	129	137	149	-	133	142	155	-
75	1800	MBh	45.84	47.20	51.09	54.83	44.77	46.10	49.90	53.55	43.71	45.00	48.71	52.28	42.64	43.90	47.52	51.00	40.51	41.71	45.15	48.45	37.52	38.64	41.82	44.88
		S/T	0.86	0.77	0.58	0.38	0.89	0.80	0.61	0.39	0.92	0.82	0.62	0.40	0.95	0.85	0.64	0.41	0.98	0.88	0.66	0.43	0.99	0.89	0.67	0.43
		ΔT	20	19	15	11	20	19	15	11	20	19	15	11	21	19	16	11	20	19	15	11	19	17	14	10
		kW	3.35	3.41	3.51	3.61	3.58	3.65	3.75	3.86	3.78	3.85	3.96	4.08	3.95	4.03	4.15	4.27	4.10	4.18	4.31	4.44	4.23	4.32	4.45	4.58
		Amps	11.9	12.2	12.6	13.0	12.9	13.2	13.6	14.1	14.0	14.3	14.8	15.3	14.9	15.3	15.8	16.4	15.9	16.3	16.8	17.5	16.8	17.3	17.8	18.5
		Hi PR	236	254	268	280	265	285	301	314	301	324	342	357	343	369	390	407	386	415	439	458	427	459	485	506
		Lo PR	112	119	130	138	118	126	137	146	123	131	143	152	129	137	150	160	135	144	157	167	140	149	163	173
	1600	MBh	44.5	45.8	49.6	53.2	43.5	44.8	48.4	52.0	42.4	43.7	47.3	50.8	41.4	**42.6**	46.1	49.5	39.3	40.5	43.8	47.0	36.4	37.5	40.6	43.6
		S/T	0.82	0.74	0.56	0.36	0.85	0.76	0.58	0.37	0.87	0.78	0.59	0.38	0.90	**0.81**	0.61	0.39	0.94	0.84	0.63	0.41	0.94	0.84	0.64	0.41
		ΔT	21	19	16	11	21	20	16	11	21	20	16	11	21	**20**	16	11	21	19	16	11	20	18	15	10
		kW	3.33	3.39	3.48	3.58	3.55	3.62	3.72	3.83	3.75	3.82	3.93	4.05	3.92	**4.00**	4.12	4.24	4.07	4.15	4.28	4.41	4.20	4.28	4.41	4.55
		Amps	11.8	12.1	12.5	12.9	12.7	13.0	13.5	14.0	13.8	14.2	14.6	15.2	14.8	**15.2**	15.7	16.3	15.7	16.1	16.7	17.3	16.7	17.1	17.7	18.4
		Hi PR	234	252	266	277	262	282	298	311	298	321	339	354	340	**366**	386	403	382	411	434	453	422	454	480	501
		Lo PR	111	118	129	137	117	125	136	145	122	129	141	151	128	**136**	149	158	134	143	156	166	139	147	161	171
	1400	MBh	41.1	42.3	45.8	49.1	40.1	41.3	44.7	48.0	39.2	40.3	43.7	46.8	38.2	39.34	42.6	45.7	36.3	37.4	40.5	43.4	33.6	34.6	37.5	40.2
		S/T	0.79	0.71	0.54	0.35	0.82	0.74	0.56	0.36	0.84	0.75	0.57	0.37	0.87	0.78	0.59	0.38	0.90	0.81	0.61	0.39	0.91	0.81	0.62	0.40
		ΔT	21	20	16	11	22	20	16	11	22	20	16	11	22	20	16	11	22	20	16	11	20	19	15	10
		kW	3.26	3.32	3.41	3.51	3.48	3.54	3.64	3.75	3.67	3.74	3.85	3.96	3.84	3.91	4.03	4.15	3.98	4.06	4.18	4.31	4.10	4.19	4.31	4.44
		Amps	11.5	11.7	12.1	12.6	12.4	12.7	13.1	13.6	13.5	13.8	14.2	14.8	14.4	14.7	15.2	15.8	15.3	15.7	16.2	16.8	16.2	16.6	17.2	17.8
		Hi PR	227	244	258	269	254	274	289	302	289	311	329	343	330	355	375	391	371	399	421	439	410	441	466	486
		Lo PR	108	114	125	133	114	121	132	141	118	126	137	146	124	132	144	153	130	138	151	161	134	143	156	166

IDB: Entering Indoor Dry Bulb Temperature

Shaded area reflects ACCA (TVA) Rating Conditions

kW = Total system power

High and low pressures are measured at the liquid and suction service valves.

Amps = Outdoor unit amps (compressor + fan)

			Outdoor Ambient Temperature																							
			65ºF				75ºF				85ºF				95ºF				105ºF				115ºF			
			Entering Indoor Wet Bulb Temperature																							
IDB	Airflow		59	63	67	71	59	63	67	71	59	63	67	71	59	63	67	71	59	63	67	71	59	63	67	71
80	1800	MBh	46.66	47.67	50.93	54.45	45.57	46.57	49.75	53.18	44.49	45.46	48.56	51.92	43.40	44.35	47.38	50.65	41.23	42.13	45.01	48.12	38.19	39.03	41.69	44.57
		S/T	0.95	0.89	0.72	0.54	1.00	0.92	0.75	0.56	1.00	0.94	0.77	0.57	1.00	1.00	0.79	0.59	1.00	1.00	0.82	0.61	1.00	1.00	0.83	0.62
		ΔT	23	22	19	15	23	22	19	15	23	22	19	15	22	23	19	15	21	22	19	15	20	20	18	14
		kW	3.38	3.44	3.53	3.63	3.60	3.67	3.78	3.89	3.80	3.88	3.99	4.11	3.98	4.06	4.18	4.31	4.13	4.22	4.34	4.48	4.26	4.35	4.48	4.62
		Amps	12.0	12.3	12.7	13.2	13.0	13.3	13.7	14.2	14.1	14.4	14.9	15.5	15.1	15.4	16.0	16.6	16.0	16.4	17.0	17.6	17.0	17.4	18.0	18.7
		Hi PR	238	257	271	283	268	288	304	317	304	328	346	361	347	373	394	411	390	420	443	462	431	464	490	511
		Lo PR	113	120	131	140	119	127	139	148	124	132	144	154	130	139	152	161	137	145	159	169	141	150	164	175
	1600	MBh	45.3	46.3	49.5	52.9	44.2	45.2	48.3	51.6	43.2	44.1	47.2	50.4	42.1	43.1	**46.0**	49.2	40.0	40.9	43.7	46.7	37.1	37.9	40.5	43.3
		S/T	0.90	0.85	0.69	0.51	0.94	0.88	0.71	0.53	0.96	0.90	0.73	0.55	0.99	0.93	**0.76**	0.56	1.00	0.96	0.78	0.59	1.00	0.97	0.79	0.59
		ΔT	23	23	20	16	24	23	20	16	24	23	20	16	24	23	**20**	16	23	23	20	16	21	21	18	15
		kW	3.35	3.41	3.51	3.61	3.58	3.65	3.75	3.86	3.78	3.85	3.96	4.08	3.95	4.03	**4.15**	4.28	4.10	4.18	4.31	4.44	4.23	4.32	4.45	4.58
		Amps	11.9	12.2	12.6	13.0	12.9	13.2	13.6	14.1	14.0	14.3	14.8	15.3	14.9	15.3	**15.8**	16.4	15.9	16.3	16.8	17.5	16.8	17.3	17.8	18.5
		Hi PR	236	254	268	280	265	285	301	314	301	324	342	357	343	369	**390**	407	386	415	439	458	427	459	485	506
		Lo PR	112	119	130	139	118	126	137	146	123	131	143	152	129	137	**150**	160	135	144	157	167	140	149	163	173
	1400	MBh	41.8	42.7	45.6	48.8	40.8	41.7	44.6	47.7	39.9	40.7	43.5	46.5	38.9	39.7	42.5	45.4	36.9	37.8	40.3	43.1	34.2	35.0	37.4	39.9
		S/T	0.87	0.82	0.66	0.50	0.90	0.85	0.69	0.51	0.92	0.87	0.71	0.53	0.95	0.90	0.73	0.54	0.99	0.93	0.76	0.57	1.00	0.94	0.76	0.57
		ΔT	24	23	20	16	24	23	20	16	24	23	20	16	24	23	20	16	24	23	20	16	22	22	19	15
		kW	3.28	3.34	3.43	3.53	3.50	3.57	3.67	3.77	3.69	3.77	3.87	3.99	3.87	3.94	4.06	4.18	4.01	4.09	4.21	4.34	4.14	4.22	4.34	4.48
		Amps	11.6	11.8	12.2	12.7	12.5	12.8	13.2	13.7	13.6	13.9	14.4	14.9	14.5	14.9	15.4	16.0	15.5	15.8	16.4	17.0	16.4	16.8	17.3	18.0
		Hi PR	229	246	260	271	257	277	292	305	292	315	332	346	333	358	378	395	375	403	426	444	414	445	470	490
		Lo PR	109	116	126	134	115	122	133	142	119	127	139	148	125	133	146	155	131	140	152	162	136	144	158	168
85	1800	MBh	47.47	48.39	50.68	54.07	46.37	47.26	49.50	52.81	45.26	46.14	48.32	51.55	44.16	45.01	47.14	50.29	41.95	42.76	44.79	47.78	38.86	39.61	41.49	44.26
		S/T	0.99	0.96	0.86	0.70	1.00	0.99	0.90	0.73	1.00	1.00	0.92	0.74	1.00	1.00	0.95	0.77	1.00	1.00	0.98	0.80	1.00	1.00	0.99	0.80
		ΔT	24	24	22	19	24	24	23	20	23	24	23	20	23	23	23	20	21	22	22	19	20	20	21	18
		kW	3.40	3.46	3.56	3.66	3.63	3.70	3.80	3.92	3.83	3.91	4.02	4.14	4.01	4.09	4.21	4.34	4.16	4.25	4.38	4.51	4.30	4.38	4.52	4.66
		Amps	12.1	12.4	12.8	13.3	13.1	13.4	13.9	14.4	14.2	14.6	15.1	15.6	15.2	15.6	16.1	16.7	16.2	16.6	17.1	17.8	17.2	17.6	18.2	18.9
		Hi PR	241	259	274	285	270	291	307	320	307	331	349	364	350	377	398	415	394	424	448	467	435	468	495	516
		Lo PR	114	122	133	141	121	128	140	149	125	133	146	155	132	140	153	163	138	147	160	171	143	152	166	177
	1600	MBh	46.1	47.0	49.2	52.5	45.0	45.9	48.1	51.3	43.9	44.8	46.9	50.1	42.9	43.7	45.8	48.8	40.7	41.5	43.5	46.4	37.7	38.5	40.3	43.0
		S/T	0.95	0.91	0.82	0.67	0.98	0.95	0.85	0.69	1.00	0.97	0.88	0.71	1.00	1.00	0.90	0.73	1.00	1.00	0.94	0.76	1.00	1.00	0.95	0.77
		ΔT	25	25	23	20	25	25	24	20	25	25	24	20	25	25	24	21	23	24	23	20	22	22	22	19
		kW	3.38	3.44	3.53	3.63	3.60	3.67	3.78	3.89	3.80	3.88	3.99	4.11	3.98	4.06	4.18	4.31	4.13	4.22	4.34	4.48	4.26	4.35	4.48	4.62
		Amps	12.0	12.3	12.7	13.2	13.0	13.3	13.7	14.2	14.1	14.4	14.9	15.5	15.1	15.4	16.0	16.6	16.0	16.4	17.0	17.6	17.0	17.4	18.0	18.7
		Hi PR	238	257	271	283	268	288	304	317	304	328	346	361	347	373	394	411	390	420	443	462	431	464	490	511
		Lo PR	113	120	131	140	119	127	139	148	124	132	144	154	130	139	152	161	137	145	159	169	141	150	164	175
	1400	MBh	42.5	43.4	45.4	48.5	41.5	42.4	44.4	47.3	40.6	41.3	43.3	46.2	39.6	40.3	42.2	45.1	37.6	38.3	40.1	42.8	34.8	35.5	37.2	39.7
		S/T	0.91	0.88	0.79	0.64	0.95	0.91	0.82	0.67	0.97	0.94	0.84	0.68	1.00	0.97	0.87	0.71	1.00	1.00	0.90	0.73	1.00	1.00	0.91	0.74
		ΔT	25	25	24	21	26	25	24	21	26	25	24	21	26	26	24	21	25	25	24	21	23	23	22	19
		kW	3.31	3.37	3.46	3.56	3.53	3.59	3.69	3.80	3.72	3.79	3.90	4.02	3.89	3.97	4.09	4.21	4.04	4.12	4.24	4.37	4.17	4.25	4.38	4.51
		Amps	11.7	12.0	12.3	12.8	12.6	12.9	13.3	13.8	13.7	14.0	14.5	15.1	14.7	15.0	15.5	16.1	15.6	16.0	16.5	17.1	16.5	16.9	17.5	18.2
		Hi PR	231	249	263	274	260	279	295	308	295	318	335	350	336	362	382	399	378	407	430	448	418	450	475	495
		Lo PR	110	117	127	136	116	123	135	143	120	128	140	149	127	135	147	157	133	141	154	164	137	146	159	170

IDB: Entering Indoor Dry Bulb Temperature

High and low pressures are measured at the liquid and suction service valves.

Shaded area reflects AHRI (TVA) Rating Conditions

kW = Total system power

Amps = Outdoor unit amps (compressor + fan)

			Outdoor Ambient Temperature																							
			65ºF				75ºF				85ºF				95ºF				105ºF				115ºF			
			Entering Indoor Wet Bulb Temperature																							
IDB	Airflow		59	63	67	71	59	63	67	71	59	63	67	71	59	63	67	71	59	63	67	71	59	63	67	71
70	2025	MBh	55.9	57.9	63.4	-	54.6	56.5	62.0	-	53.3	55.2	60.5	-	52.0	53.9	59.0	-	49.4	51.2	56.1	-	45.7	47.4	51.9	-
		S/T	0.75	0.63	0.44	-	0.78	0.65	0.45	-	0.80	0.67	0.46	-	0.83	0.69	0.48	-	0.86	0.72	0.50	-	0.86	0.72	0.50	-
		ΔT	19	17	13	-	19	17	13	-	19	17	13	-	19	17	13	-	19	17	13	-	18	16	12	-
		kW	4.11	4.19	4.31	-	4.40	4.49	4.62	-	4.66	4.75	4.90	-	4.88	4.99	5.14	-	5.08	5.18	5.34	-	5.24	5.35	5.52	-
		Amps	14.5	14.8	15.3	-	15.7	16.1	16.6	-	17.1	17.5	18.1	-	18.3	18.7	19.3	-	19.4	19.9	20.6	-	20.6	21.1	21.9	-
		Hi PR	225	242	255	-	252	271	287	-	287	309	326	-	327	352	371	-	367	395	418	-	406	437	461	-
		Lo PR	102	108	118	-	108	115	125	-	112	119	130	-	118	125	137	-	123	131	143	-	127	136	148	-
	1800	MBh	54.2	56.2	61.6	-	53.0	54.9	60.1	-	51.7	53.6	58.7	-	50.4	52.3	57.3	-	47.9	49.7	54.4	-	44.4	46.0	50.4	-
		S/T	0.72	0.60	0.42	-	0.74	0.62	0.43	-	0.76	0.64	0.44	-	0.79	0.66	0.46	-	0.82	0.68	0.47	-	0.82	0.69	0.48	-
		ΔT	20	17	13	-	20	17	13	-	20	17	13	-	20	18	13	-	20	17	13	-	19	16	12	-
		kW	4.08	4.16	4.28	-	4.37	4.46	4.59	-	4.62	4.72	4.86	-	4.85	4.95	5.10	-	5.04	5.14	5.30	-	5.20	5.31	5.48	-
		Amps	14.4	14.7	15.2	-	15.5	15.9	16.5	-	16.9	17.3	17.9	-	18.1	18.5	19.2	-	19.3	19.7	20.4	-	20.4	20.9	21.7	-
		Hi PR	222	239	253	-	250	269	284	-	284	306	323	-	323	348	368	-	364	392	413	-	402	433	457	-
		Lo PR	101	107	117	-	107	113	124	-	111	118	129	-	116	124	135	-	122	130	142	-	126	134	147	-
	1575	MBh	50.1	51.9	56.8	-	48.9	50.7	55.5	-	47.7	49.5	54.2	-	46.6	48.3	52.9	-	44.2	45.8	50.2	-	41.0	42.5	46.5	-
		S/T	0.69	0.58	0.40	-	0.72	0.60	0.42	-	0.74	0.61	0.43	-	0.76	0.63	0.44	-	0.79	0.66	0.46	-	0.80	0.66	0.46	-
		ΔT	20	18	13	-	20	18	13	-	21	18	13	-	21	18	14	-	20	18	13	-	19	16	12	-
		kW	3.99	4.07	4.18	-	4.27	4.35	4.48	-	4.52	4.61	4.75	-	4.73	4.83	4.98	-	4.92	5.02	5.18	-	5.08	5.19	5.35	-
		Amps	14.0	14.3	14.8	-	15.1	15.5	16.0	-	16.4	16.8	17.4	-	17.6	18.0	18.6	-	18.7	19.2	19.8	-	19.9	20.4	21.0	-
		Hi PR	216	232	245	-	242	261	275	-	275	296	313	-	314	338	356	-	353	380	401	-	390	420	443	-
		Lo PR	98	104	114	-	103	110	120	-	108	114	125	-	113	120	131	-	118	126	137	-	122	130	142	-
75	2025	MBh	56.80	58.48	63.30	67.94	55.48	57.12	61.83	66.36	54.16	55.76	60.36	64.78	52.84	54.40	58.89	63.20	50.20	51.68	55.94	60.04	46.50	47.87	51.82	55.62
		S/T	0.86	0.77	0.58	0.37	0.89	0.79	0.60	0.39	0.91	0.81	0.62	0.40	0.94	0.84	0.64	0.41	0.97	0.87	0.66	0.42	0.98	0.88	0.67	0.43
		ΔT	22	20	17	12	22	21	17	12	22	21	17	12	23	21	17	12	22	20	17	12	21	19	16	11
		kW	4.14	4.22	4.34	4.47	4.43	4.52	4.66	4.80	4.69	4.79	4.94	5.09	4.92	5.02	5.18	5.34	5.12	5.22	5.39	5.56	5.29	5.40	5.57	5.75
		Amps	14.6	15.0	15.5	16.1	15.8	16.2	16.8	17.4	17.2	17.7	18.2	18.9	18.4	18.9	19.5	20.3	19.6	20.1	20.8	21.6	20.8	21.3	22.1	22.9
		Hi PR	227	244	258	269	255	274	289	302	290	312	329	343	330	355	375	391	371	399	422	440	410	441	466	486
		Lo PR	103	110	120	127	109	116	126	135	113	120	131	140	119	126	138	147	125	132	145	154	129	137	150	159
	1800	MBh	55.1	56.8	61.5	66.0	53.9	55.5	60.0	64.4	52.6	54.1	58.6	62.9	51.3	**52.8**	57.2	61.4	48.7	50.2	54.3	58.3	45.1	46.5	50.3	54.0
		S/T	0.82	0.73	0.55	0.36	0.85	0.76	0.57	0.37	0.87	0.78	0.59	0.38	0.90	**0.80**	0.61	0.39	0.93	0.83	0.63	0.40	0.94	0.84	0.63	0.41
		ΔT	23	21	17	12	23	21	18	12	23	21	18	12	23	**22**	18	12	23	21	17	12	22	20	16	11
		kW	4.11	4.19	4.31	4.44	4.40	4.49	4.62	4.76	4.66	4.75	4.90	5.05	4.89	**4.99**	5.14	5.30	5.08	5.18	5.34	5.51	5.24	5.35	5.52	5.70
		Amps	14.5	14.8	15.3	15.9	15.7	16.1	16.6	17.2	17.1	17.5	18.1	18.8	18.3	**18.7**	19.3	20.1	19.5	19.9	20.6	21.4	20.6	21.1	21.9	22.7
		Hi PR	225	242	255	266	252	271	287	299	287	309	326	340	327	**352**	371	387	368	396	418	436	406	437	461	481
		Lo PR	102	108	118	126	108	115	125	133	112	119	130	139	118	**125**	137	146	123	131	143	152	128	136	148	158
	1575	MBh	50.9	52.4	56.7	60.9	49.7	51.2	55.4	59.5	48.5	50.0	54.1	58.1	47.3	48.75	52.8	56.6	45.0	46.3	50.1	53.8	41.7	42.9	46.4	49.8
		S/T	0.79	0.70	0.53	0.34	0.82	0.73	0.55	0.36	0.84	0.75	0.57	0.36	0.86	0.77	0.58	0.38	0.90	0.80	0.61	0.39	0.90	0.81	0.61	0.39
		ΔT	23	22	18	12	24	22	18	12	24	22	18	12	24	22	18	12	24	22	18	12	22	20	17	11
		kW	4.02	4.10	4.22	4.34	4.30	4.39	4.52	4.65	4.55	4.64	4.78	4.93	4.77	4.87	5.02	5.17	4.96	5.06	5.22	5.38	5.12	5.23	5.39	5.56
		Amps	14.1	14.4	14.9	15.5	15.3	15.6	16.1	16.8	16.6	17.0	17.6	18.2	17.7	18.2	18.8	19.5	18.9	19.4	20.0	20.8	20.0	20.5	21.2	22.1
		Hi PR	218	235	248	258	245	263	278	290	278	299	316	330	317	341	360	376	357	384	405	423	394	424	448	467
		Lo PR	99	105	115	122	105	111	121	129	109	116	126	134	114	121	133	141	120	127	139	148	124	132	144	153

IDB: Entering Indoor Dry Bulb Temperature

Shaded area reflects ACCA (TVA) Rating Conditions

kW = Total system power

High and low pressures are measured at the liquid and suction service valves.

Amps = Outdoor unit amps (compressor + fan)

Cooling Data — GSZ130601A* / AR*F48601** (cont.)

			Outdoor Ambient Temperature																							
			65ºF				75ºF				85ºF				95ºF				105ºF				115ºF			
			Entering Indoor Wet Bulb Temperature																							
IDB	Airflow		59	63	67	71	59	63	67	71	59	63	67	71	59	63	67	71	59	63	67	71	59	63	67	71
80	2025	MBh	57.81	59.07	63.11	67.47	56.47	57.70	61.65	65.90	55.12	56.33	60.18	64.33	53.78	54.95	58.71	62.76	51.09	52.20	55.77	59.62	47.32	48.36	51.66	55.23
		S/T	0.94	0.88	0.72	0.54	1.00	0.91	0.74	0.56	1.00	0.94	0.76	0.57	1.00	0.97	0.79	0.59	1.00	1.00	0.82	0.61	1.00	1.00	0.82	0.62
		ΔT	25	24	21	16	26	24	21	17	25	24	21	17	24	24	21	17	23	24	21	17	21	22	19	15
		kW	4.17	4.25	4.38	4.51	4.47	4.56	4.69	4.84	4.73	4.83	4.97	5.13	4.96	5.06	5.22	5.39	5.16	5.27	5.43	5.60	5.33	5.44	5.61	5.79
		Amps	14.8	15.1	15.6	16.2	16.0	16.4	16.9	17.6	17.4	17.8	18.4	19.1	18.6	19.1	19.7	20.5	19.8	20.3	21.0	21.8	21.0	21.5	22.3	23.1
		Hi PR	229	247	261	272	257	277	292	305	293	315	333	347	333	359	379	395	375	404	426	444	414	446	471	491
		Lo PR	104	111	121	129	110	117	128	136	114	122	133	141	120	128	139	148	126	134	146	156	130	138	151	161
	1800	MBh	56.1	57.4	61.3	65.5	54.8	56.0	59.9	64.0	53.5	54.7	58.4	62.5	52.2	53.4	**57.0**	60.9	49.6	50.7	54.2	57.9	45.9	46.9	50.2	53.6
		S/T	0.90	0.84	0.68	0.51	0.93	0.87	0.71	0.53	0.95	0.89	0.73	0.54	0.98	0.92	**0.75**	0.56	1.00	0.96	0.78	0.58	1.00	0.96	0.78	0.59
		ΔT	26	25	21	17	26	25	22	17	26	25	22	17	26	25	**22**	17	25	25	22	17	23	23	20	16
		kW	4.14	4.22	4.34	4.47	4.43	4.52	4.66	4.80	4.69	4.79	4.94	5.09	4.92	5.03	**5.18**	5.34	5.12	5.23	5.39	5.56	5.29	5.40	5.57	5.75
		Amps	14.6	15.0	15.5	16.1	15.8	16.2	16.8	17.4	17.2	17.7	18.2	18.9	18.4	18.9	**19.5**	20.3	19.6	20.1	20.8	21.6	20.8	21.3	22.1	22.9
		Hi PR	227	244	258	269	255	274	290	302	290	312	329	343	330	355	**375**	391	371	400	422	440	410	441	466	486
		Lo PR	103	110	120	127	109	116	126	135	113	120	131	140	119	126	**138**	147	125	132	145	154	129	137	150	159
	1575	MBh	51.8	52.9	56.6	60.5	50.6	51.7	55.2	59.1	49.4	50.5	53.9	57.6	48.2	49.2	52.6	56.2	45.8	46.8	50.0	53.4	42.4	43.3	46.3	49.5
		S/T	0.86	0.81	0.66	0.49	0.90	0.84	0.68	0.51	0.92	0.86	0.70	0.52	0.95	0.89	0.72	0.54	0.98	0.92	0.75	0.56	0.99	0.93	0.76	0.57
		ΔT	26	25	22	17	26	25	22	18	26	25	22	18	27	26	22	18	26	25	22	17	25	24	20	16
		kW	4.05	4.13	4.25	4.37	4.33	4.42	4.55	4.69	4.59	4.68	4.82	4.97	4.81	4.91	5.06	5.22	5.00	5.10	5.26	5.43	5.16	5.27	5.43	5.61
		Amps	14.2	14.6	15.1	15.6	15.4	15.8	16.3	16.9	16.7	17.2	17.7	18.4	17.9	18.4	19.0	19.7	19.1	19.6	20.2	21.0	20.2	20.7	21.4	22.3
		Hi PR	220	237	250	261	247	266	281	293	281	302	319	333	320	344	364	379	360	388	409	427	398	428	452	472
		Lo PR	100	106	116	124	106	112	123	131	110	117	127	136	115	123	134	143	121	129	140	149	125	133	145	155
85	2025	MBh	58.82	59.96	62.80	67.00	57.45	58.57	61.34	65.44	56.09	57.17	59.88	63.88	54.72	55.78	58.42	62.32	51.98	52.99	55.50	59.21	48.15	49.08	51.41	54.84
		S/T	0.98	0.95	0.86	0.70	1.00	0.98	0.89	0.72	1.00	1.00	0.91	0.74	1.00	1.00	0.94	0.76	1.00	1.00	0.98	0.79	1.00	1.00	0.98	0.80
		ΔT	26	26	24	21	26	26	25	21	25	26	25	21	25	25	25	22	24	24	25	21	22	22	23	20
		kW	4.20	4.28	4.41	4.54	4.50	4.59	4.73	4.87	4.77	4.86	5.01	5.17	5.00	5.10	5.26	5.43	5.20	5.31	5.47	5.65	5.37	5.48	5.66	5.84
		Amps	14.9	15.3	15.8	16.4	16.1	16.5	17.1	17.7	17.5	18.0	18.6	19.3	18.8	19.2	19.9	20.7	20.0	20.5	21.2	22.0	21.2	21.7	22.5	23.4
		Hi PR	232	249	263	275	260	280	295	308	296	318	336	350	337	362	383	399	379	408	430	449	418	450	475	496
		Lo PR	105	112	122	130	111	118	129	137	115	123	134	143	121	129	141	150	127	135	148	157	131	140	153	163
	1800	MBh	57.1	58.2	61.0	65.0	55.8	56.9	59.6	63.5	54.5	55.5	58.1	62.0	53.1	54.2	56.7	60.5	50.5	51.4	53.9	57.5	46.7	47.7	49.9	53.2
		S/T	0.94	0.91	0.82	0.66	0.97	0.94	0.85	0.69	1.00	0.96	0.87	0.71	1.00	0.99	0.90	0.73	1.00	1.00	0.93	0.76	1.00	1.00	0.94	0.76
		ΔT	27	27	25	22	28	27	26	22	28	27	26	22	27	27	26	22	26	26	26	22	24	24	24	21
		kW	4.17	4.25	4.38	4.51	4.47	4.56	4.69	4.84	4.73	4.83	4.97	5.13	4.96	5.06	5.22	5.39	5.16	5.27	5.43	5.60	5.33	5.44	5.61	5.79
		Amps	14.8	15.1	15.6	16.2	16.0	16.4	16.9	17.6	17.4	17.8	18.4	19.1	18.6	19.1	19.7	20.5	19.8	20.3	21.0	21.8	21.0	21.5	22.3	23.1
		Hi PR	229	247	261	272	257	277	292	305	293	315	333	347	333	359	379	395	375	404	426	444	414	446	471	491
		Lo PR	104	111	121	129	110	117	128	136	114	122	133	141	120	128	139	148	126	134	146	156	130	138	151	161
	1575	MBh	52.7	53.7	56.3	60.0	51.5	52.5	55.0	58.6	50.3	51.2	53.7	57.2	49.0	50.0	52.3	55.8	46.6	47.5	49.7	53.1	43.1	44.0	46.1	49.1
		S/T	0.91	0.87	0.79	0.64	0.94	0.91	0.82	0.66	0.96	0.93	0.84	0.68	0.99	0.96	0.86	0.70	1.00	0.99	0.90	0.73	1.00	1.00	0.91	0.73
		ΔT	28	27	26	22	28	28	26	23	28	28	26	23	28	28	26	23	27	28	26	23	25	26	24	21
		kW	4.08	4.16	4.28	4.41	4.37	4.45	4.59	4.73	4.62	4.72	4.86	5.01	4.85	4.95	5.10	5.26	5.04	5.14	5.30	5.47	5.20	5.31	5.48	5.65
		Amps	14.4	14.7	15.2	15.8	15.5	15.9	16.5	17.1	16.9	17.3	17.9	18.6	18.1	18.5	19.2	19.9	19.3	19.7	20.4	21.2	20.4	20.9	21.7	22.5
		Hi PR	222	239	253	264	250	269	284	296	284	305	323	336	323	348	367	383	364	391	413	431	402	432	457	476
		Lo PR	101	107	117	125	107	113	124	132	111	118	129	137	116	124	135	144	122	130	142	151	126	134	147	156

IDB: Entering Indoor Dry Bulb Temperature

High and low pressures are measured at the liquid and suction service valves.

Shaded area reflects AHRI (TVA) Rating Conditions

kW = Total system power

Amps = Outdoor unit amps (compressor + fan)

GSZ130181A* / AR*F182416**

	Outdoor Ambient Temperature																	
	65	60	55	50	47	45	40	35	30	25	20	17	15	10	5	0	-5	-10
MBh	21.4	20.2	19.0	17.8	**17.0**	16.5	15.3	14.1	13.3	12.3	11.3	10.7	10.3	9.2	8.2	7.2	6.1	5.0
ΔT	33.0	31.2	29.4	27.5	26.2	25.4	23.6	21.8	20.6	19.0	17.5	16.5	15.9	14.3	12.7	11.0	9.4	7.7
kW	1.68	1.64	1.61	1.58	**1.6**	1.54	1.51	1.48	1.46	1.42	1.39	1.37	1.36	1.32	1.29	1.26	1.23	1.19
Amps	7.3	6.7	6.3	5.9	5.7	5.6	5.3	5.0	4.8	4.6	4.3	4.2	4.2	4.0	3.7	3.5	3.2	2.9
COP	3.73	3.60	3.46	3.30	3.19	3.12	2.96	2.79	2.68	2.53	2.39	2.29	2.22	2.04	1.86	1.66	1.46	1.22
EER	12.8	12.3	11.8	11.3	10.9	10.7	10.1	9.5	9.2	8.7	8.2	7.8	7.6	7.0	6.3	5.7	5.0	4.2
Hi PR	392	375	361	345	337	331	318	305	292	279	268	262	257	247	238	228	220	212
Lo PR	145	134	126	115	109	105	96	86	77	69	61	57	55	46	40	34	29	23

GSZ130241B*/ AR*F182416**

	Outdoor Ambient Temperature																	
	65	60	55	50	47	45	40	35	30	25	20	17	15	10	5	0	-5	-10
MBh	28.9	27.4	25.8	24.1	**23.0**	22.3	20.7	19.1	16.9	15.6	14.3	13.6	13.0	11.7	10.4	9.1	7.7	6.3
ΔT	33.5	31.7	29.8	27.9	26.6	25.8	24.0	22.1	19.5	18.0	16.6	15.7	15.1	13.6	12.0	10.5	8.9	7.3
kW	2.17	2.12	2.08	2.04	**2.0**	2.00	1.96	1.91	1.80	1.76	1.72	1.70	1.68	1.64	1.60	1.57	1.52	1.49
Amps	10.1	9.3	8.7	8.2	7.9	7.7	7.3	6.9	6.6	6.3	6.0	5.9	5.8	5.5	5.2	4.9	4.5	4.0
COP	3.91	3.77	3.62	3.46	3.34	3.27	3.10	2.92	2.74	2.59	2.44	2.33	2.27	2.08	1.89	1.69	1.48	1.25
EER	13.3	12.9	12.4	11.8	11.4	11.2	10.6	10.0	9.4	8.8	8.3	8.0	7.7	7.1	6.5	5.8	5.1	4.3
Hi PR	413	395	380	364	355	348	335	321	308	294	282	275	271	260	250	240	231	223
Lo PR	131	122	114	105	99	95	88	78	70	63	55	51	50	42	36	30	27	21

GSZ130301A* / AR*F30301**

	Outdoor Ambient Temperature																	
	65	60	55	50	47	45	40	35	30	25	20	17	15	10	5	0	-5	-10
MBh	33.2	31.4	29.6	27.6	**26.4**	25.6	23.8	21.9	19.9	18.4	16.9	16.0	15.4	13.8	12.3	10.7	9.1	7.5
ΔT	29.3	27.7	26.1	24.4	23.3	22.6	21.0	19.3	17.6	16.2	14.9	14.1	13.6	12.2	10.8	9.4	8.0	6.6
kW	2.52	2.47	2.42	2.37	**2.3**	2.32	2.28	2.23	2.37	2.32	2.26	2.23	2.21	2.16	2.11	2.05	2.00	1.95
Amps	9.7	9.0	8.5	8.0	7.7	7.6	7.2	6.9	6.6	6.3	6.0	5.9	5.8	5.6	5.2	5.0	4.6	4.2
COP	3.86	3.72	3.57	3.41	3.29	3.22	3.05	2.88	2.46	2.32	2.19	2.10	2.04	1.88	1.70	1.52	1.34	1.12
EER	13.2	12.7	12.2	11.6	11.3	11.0	10.4	9.8	8.4	7.9	7.5	7.2	7.0	6.4	5.8	5.2	4.6	3.8
Hi PR	366	351	337	323	315	309	297	285	273	261	250	244	240	231	222	213	205	198
Lo PR	129	119	112	103	97	93	86	76	69	62	54	50	49	41	35	30	26	20

GSZ130361B* / AR*F364216**

	Outdoor Ambient Temperature																	
	65	60	55	50	47	45	40	35	30	25	20	17	15	10	5	0	-5	-10
MBh	42.0	39.7	37.4	35.0	33.4	32.4	30.1	27.7	24.8	22.9	21.1	19.9	19.2	17.2	15.3	13.3	11.4	9.3
ΔT	38.4	36.4	34.2	32.0	30.6	29.6	27.5	25.4	22.7	21.0	19.3	18.2	17.6	15.8	14.0	12.2	10.4	8.5
kW	2.72	2.68	2.63	2.58	2.55	2.53	2.48	2.43	2.31	2.26	2.21	2.19	2.17	2.12	2.08	2.03	1.98	1.94
Amps	14.7	13.7	12.8	12.1	11.7	11.5	10.8	10.3	9.9	9.5	9.0	8.8	8.7	8.3	7.8	7.3	6.8	6.2
COP	4.01	3.86	3.69	3.51	3.38	3.30	3.12	2.93	2.75	2.58	2.42	2.31	2.24	2.05	1.85	1.64	1.43	1.20
EER	13.64	13.12	12.55	11.93	11.51	11.23	10.60	9.95	9.34	8.78	8.23	7.85	7.62	6.97	6.29	5.59	4.87	4.07
Hi PR	413	396	381	364	355	349	335	322	308	294	283	276	271	261	251	240	232	224
Lo PR	135	125	118	108	102	98	90	80	72	65	57	53	51	43	37	31	27	22

High pressure is measured at the suction service valve (the larger valve).
Low pressure is measured at the gauge port connection.
Calculations are based on nominal CFM and 70 °F indoor dry bulb.

Amps = Outdoor unit amps (comp.+fan)
kW = Total system power

GSZ130421A* / AR*F36421**

	Outdoor Ambient Temperature																	
	65	60	55	50	47	45	40	35	30	25	20	17	15	10	5	0	-5	-10
MBh	50.3	47.6	44.8	41.9	**40.0**	38.8	36.0	33.2	29.9	27.6	25.4	24.0	23.1	20.7	18.4	16.0	13.7	11.2
ΔT	34.5	32.6	30.7	28.7	27.4	26.6	24.7	22.8	20.5	18.9	17.4	16.5	15.9	14.2	12.6	11.0	9.4	7.7
kW	3.60	3.53	3.46	3.39	**3.4**	3.32	3.25	3.18	3.24	3.16	3.09	3.05	3.02	2.95	2.88	2.80	2.73	2.66
Amps	16.9	15.6	14.5	13.6	13.1	12.9	12.1	11.5	10.9	10.4	9.9	9.7	9.5	9.0	8.4	7.9	7.2	6.4
COP	4.09	3.95	3.79	3.62	3.49	3.42	3.24	3.05	2.70	2.55	2.40	2.30	2.24	2.06	1.87	1.67	1.47	1.23
EER	14.0	13.5	12.9	12.4	11.9	11.7	11.1	10.4	9.2	8.7	8.2	7.9	7.6	7.0	6.4	5.7	5.0	4.2
Hi PR	368	353	340	325	317	311	299	287	275	262	252	246	242	232	223	214	207	199
Lo PR	129	119	112	103	97	93	86	76	69	62	54	50	49	41	35	30	26	20

GSZ130481A* /AR*F48601**

	Outdoor Ambient Temperature																	
	65	60	55	50	47	45	40	35	30	25	20	17	15	10	5	0	-5	-10
MBh	55.3	52.4	49.3	46.1	**44.0**	42.6	39.6	36.5	33.6	31.1	28.6	27.0	26.0	23.3	20.7	18.0	15.4	12.6
ΔT	32.0	30.3	28.5	26.7	25.5	24.7	22.9	21.1	19.5	18.0	16.5	15.6	15.0	13.5	12.0	10.4	8.9	7.3
kW	3.93	3.87	3.80	3.73	**3.7**	3.66	3.59	3.52	3.37	3.30	3.23	3.19	3.17	3.10	3.04	2.97	2.90	2.84
Amps	18.2	16.8	15.7	14.8	14.3	14.0	13.2	12.5	12.0	11.4	10.9	10.6	10.5	9.9	9.3	8.7	8.1	7.3
COP	4.11	3.96	3.80	3.62	3.49	3.41	3.23	3.03	2.93	2.76	2.59	2.47	2.40	2.20	1.99	1.78	1.55	1.30
EER	14.1	13.5	13.0	12.4	11.9	11.7	11.0	10.4	10.0	9.4	8.8	8.5	8.2	7.5	6.8	6.1	5.3	4.4
Hi PR	380	364	350	335	327	321	308	296	284	271	260	254	249	240	231	221	213	206
Lo PR	129	119	112	103	97	93	86	76	69	62	54	50	49	41	35	30	26	20

GSZ130601A* / AR*F48601**

	Outdoor Ambient Temperature																	
	65	60	55	50	47	45	40	35	30	25	20	17	15	10	5	0	-5	-10
MBh	72.9	69.0	65.0	60.7	**58.0**	56.2	52.2	48.1	44.9	41.4	38.1	36.0	34.7	31.1	27.6	24.0	20.5	16.8
ΔT	37.5	35.5	33.4	31.2	29.8	28.9	26.9	24.8	23.1	21.3	19.6	18.5	17.8	16.0	14.2	12.4	10.6	8.6
kW	5.21	5.11	5.01	4.92	**4.9**	4.82	4.72	4.63	4.66	4.56	4.46	4.40	4.36	4.26	4.16	4.06	3.96	3.86
Amps	24.0	22.2	20.7	19.5	18.8	18.4	17.3	16.4	15.7	15.0	14.2	13.9	13.7	13.0	12.1	11.3	10.5	9.4
COP	4.10	3.95	3.79	3.62	3.49	3.41	3.23	3.05	2.82	2.66	2.50	2.40	2.33	2.14	1.94	1.73	1.52	1.28
EER	14.0	13.5	13.0	12.4	11.9	11.7	11.1	10.4	9.6	9.1	8.6	8.2	8.0	7.3	6.6	5.9	5.2	4.4
Hi PR	416	399	383	367	358	351	338	324	310	296	285	278	273	262	252	242	233	225
Lo PR	133	123	115	106	100	96	89	79	71	64	56	52	50	42	37	31	27	21

High pressure is measured at the suction service valve (the larger valve).
Low pressure is measured at the gauge port connection.
Calculations are based on nominal CFM and 70 °F indoor dry bulb.

Amps = Outdoor unit amps (comp.+fan)
kW = Total system power

Outdoor Unit	Indoor Units		Cooling Ratings ^				TVA Ratings [3]		Heating Ratings ^			CFM	AHRI #
	Coils/Air Handlers	Furnaces	Total	Sens.	SEER [1]	EER [2]	Total	Sens.	Hi [4]	HSPF [5]	Low [6]		
GSZ13 0181A*	AWUF31XX16A*		17,400	12,900	14.0	11.3	16,100	12,700	17,500	8.2	10,000	600	3629336
GSZ13 0241B*	AWUF31XX16A*		24,000	18,100	14.0	12.0	22,200	17,800	22,800	8.2	13,400	800	3842473
	AWUF32XX16A*		24,000	18,100	14.0	12.0	22,200	17,800	22,800	8.2	13,400	800	3842474
	CA*F1824*6D*+MBVC1200**-1A*		23,800	17,900	14.0	12.0	22,000	17,600	22,800	8.2	13,200	800	4150316
	CHPF2430B6C*+MBVC1200**-1A*		24,000	18,100	14.0	12.0	22,200	17,800	23,000	8.2	13,200	800	3842493
GSZ13 0301A*	CHPF2430B6C*+MBVC1200**-1A*		28,400	21,400	14.0	11.3	26,200	21,400	26,400	8.2	16,000	1,050	3610003
GSZ13 0361B*	ASPT42D14A*		35,200	26,800	14.0	12.0	32,600	26,000	33,000	8.2	21,200	1,280	6497875
	CA*F3642*6D*+MBVC1600**-1A*		35,200	26,800	14.0	11.5	32,600	26,000	32,000	8.2	20,000	1,200	3880695
	CA*F3743*6D*+MBVC1600**-1A*		35,000	26,600	14.0	11.3	32,400	26,000	34,000	8.2	20,000	1,200	6497888
	CHPF3642C6C*+MBVC1600**-1A*		34,800	26,400	14.0	11.5	32,200	25,800	32,600	8.2	20,000	1,200	3850501
	CHPF3642D6C*+MBVC2000**-1A*		35,200	26,800	14.0	12.0	32,600	26,000	32,000	8.5	20,000	1,150	3850543
GSZ13 0421A*	CA*F4860*6D*+TXV	G*E80805C*B*	41,000	29,000	14.0	11.3	38,000	30,000	40,500	8.2	24,000	1,350	5038613
	CA*F4860*6D*+TXV	G*E81005C*B*	41,000	29,000	14.0	11.3	38,000	30,000	40,500	8.2	24,000	1,420	5038685
	CA*F4860*6D*+TXV	A*EH800805C*A*	41,000	29,000	14.0	11.3	38,000	30,000	40,500	8.2	24,000	1,350	6844561
	CA*F4860*6D*+TXV	A*EH801005C*A*	41,000	29,000	14.0	11.3	38,000	30,000	40,500	8.2	24,000	1,420	6844623
	CHPF4860D6D*+MBVC1600**-1A*		41,000	29,000	14.0	11.3	38,000	30,000	40,500	8.2	24,000	1,350	3610032
	CHPF4860D6D*+TXV	G*E80805C*B*	41,000	29,000	14.0	11.3	38,000	30,000	40,500	8.2	24,000	1,350	5038639
	CHPF4860D6D*+TXV	G*E81005C*B*	41,000	29,000	14.0	11.3	38,000	30,000	40,500	8.2	24,000	1,420	5038686
	CHPF4860D6D*+TXV	A*EH800805C*A*	41,000	29,000	14.0	11.3	38,000	30,000	40,500	8.2	24,000	1,350	6844578
	CHPF4860D6D*+TXV	A*EH801005C*A*	41,000	29,000	14.0	11.3	38,000	30,000	40,500	8.2	24,000	1,420	6844625
GSZ13 0481A*	ASPT48D14A*		46,000	36,000	14.0	12.0	42,500	34,600	44,000	8.2	26,400	1,600	5796518
	ASPT60D14A*		46,000	36,000	14.0	12.0	42,500	34,600	44,000	8.2	26,400	1,600	5722661
	AVPTC48D14A*		46,000	36,000	14.0	12.0	42,500	34,600	44,000	8.2	26,400	1,615	5924426
	CA*F4860*6D*+MBVC2000**-1A*+TXV		46,000	36,000	14.0	11.3	42,500	34,600	44,000	8.2	27,000	1,600	3880758
	CAPT4961*4A*+MBVC2000**-1A*		45,500	35,600	14.0	12.0	42,000	34,200	41,500	8.5	26,200	1,550	5611343
	CHPF4860D6D*+MBVC2000**-1A*+TXV		46,000	36,000	14.0	11.3	42,500	34,600	44,000	8.2	27,000	1,600	3610053

^ Rated in accordance with ANSI/AHRI Standard 210/240

[1] Seasonal Energy Efficiency Ratio

[2] Energy Efficiency Ratio @ 80°F/ 67°F/ 95°F

[3] TVA Rating: BTU/h @ 75°F/ 63°F - 95°F

[4] Rated heating capacity at 47°F outdoor per AHRI 210/240

[5] HSPF = Heating Seasonal Performance Factor

[6] Heating capacity at 17°F outdoor

[7] CFM at High stage

[8] CFM at Intermediate and low stage

Notes

- Always check the S&R plate for electrical data on the unit being installed.
- When matching outdoor unit to indoor unit, use the piston supplied with the outdoor unit or that specified on the piston kit chart supplied with the indoor unit.
- EEP - Order from Service Dept. Part No. B13707-38 or new Solid State Board B13707-35S. Part No. B13707-38 is not interchangeable with B13707-35S. The Goodman brand gas furnace contains the EEP cooling time delay.

ECN	REV	ZONE	DESCRIPTION	CHK	D	DATE
XXXXXXX	A	XXXXX		-	GL	

MODEL	DIMENSIONS		
	W"	D"	H"
GSZ130181**	26	26	32¼
GSZ130241**	26	26	32¼
GSZ130301**	26	26	32¼
GSZ130361**	29	29	32¼
GSZ130421**	29	29	38¼
GSZ130481**	29	29	34¼
GSZ130601**	35½	35½	34¼

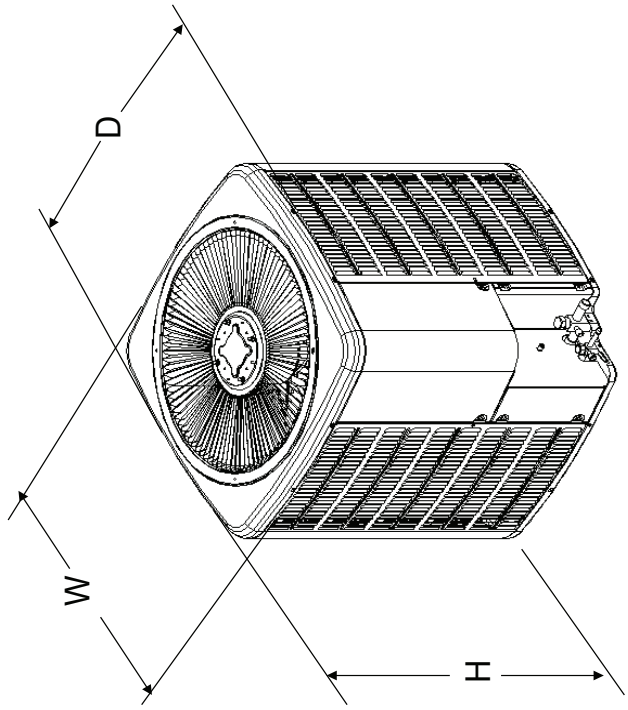

SPECIAL CHARACTERISTICS:

6σ = 6SIGMA

CRITICAL CHARACTERISTIC

SIGNIFICANT CHARACTERISTIC

COMPONENTS AND MATERIALS SPECIFIED HEREIN WILL ALSO CONFORM TO THE APPLICABLE SECTION OF GOODMAN MSP 824.01 WORKMANSHIP STANDARD FOR FIT, FEEL AND FINISH.

CONFIDENTIAL PROPERTY OF THE GOODMAN MANUFACTURING COMPANY, LP. NOT TO BE DISCLOSED TO OTHERS, COPIED, OR USED FOR ANY PURPOSE EXCEPT AS AUTHORIZED IN WRITING. MUST BE RETURNED UPON DEMAND, ON COMPLETION OF ORDER, OR OTHER PURPOSE FOR WHICH IT WAS LENT.

DRAWING TO BE INTERPRETED IN ACCORDANCE WITH ASME Y14.100

DIMENSIONS ARE IN INCHES UNLESS OTHERWISE NOTED

TOLERANCES:
ANGLES ± 15°
.X : ± .1 .XX : ± .03
.XXX : ± .015
HOLE Ø : ± .005
TUBE CUT LG : ± .063

Goodman Manufacturing Co. LP

GSZ13

DWN BY: ENG:

DO NOT SCALE DRAWING

SHT 1 OF 1

REV A

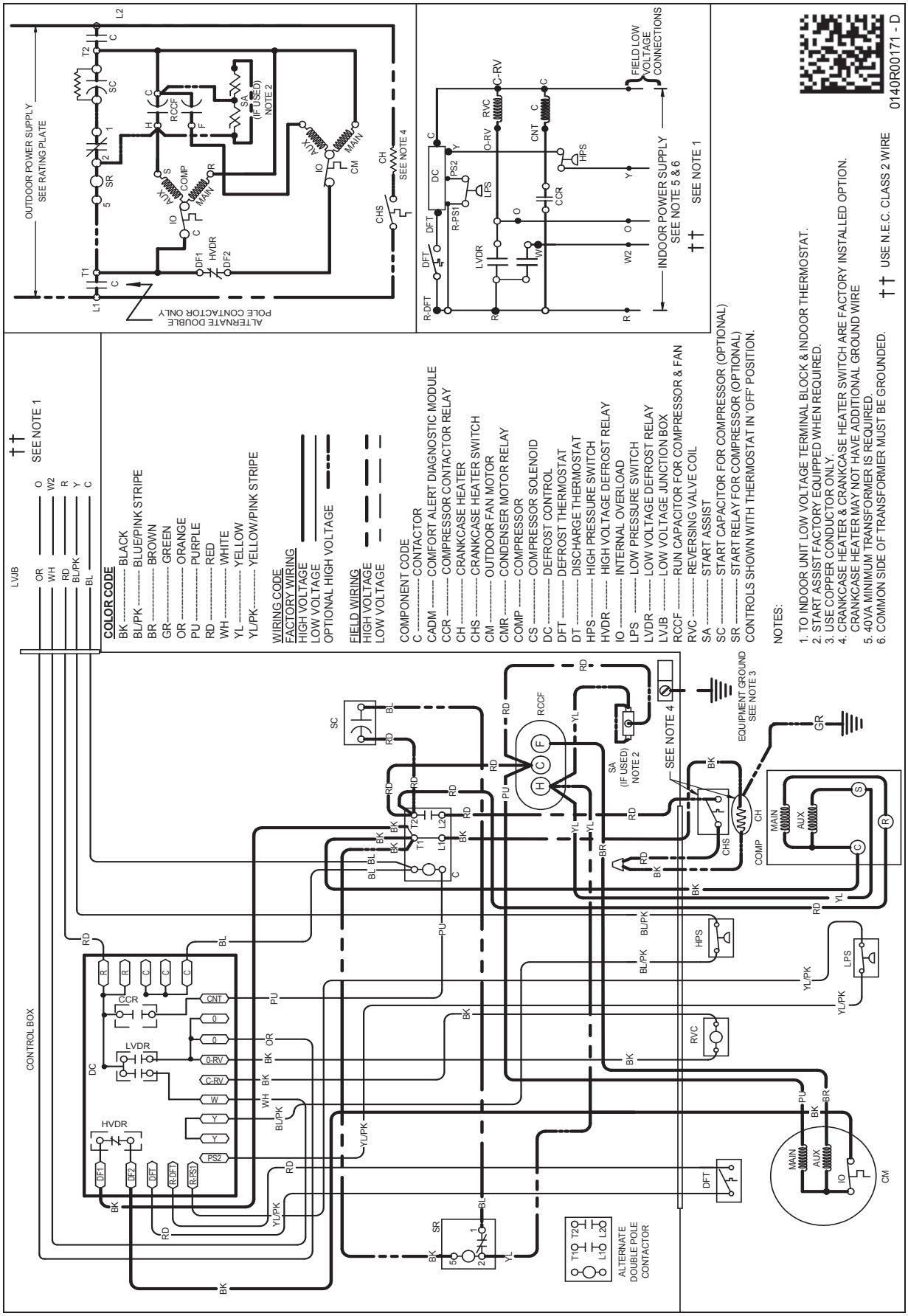

WARNING

High Voltage: Disconnect all power before servicing or installing this unit. Multiple power sources may be present. Failure to do so may cause property damage, personal injury, or death.

Wiring is subject to change. Always refer to the wiring diagram or the unit for the most up-to-date wiring.

ACCESSORIES

MODEL #	DESCRIPTION	GSZ13 018	GSZ13 024	GSZ13 030	GSZ13 036	GSZ13 042	GSZ13 048	GSZ13 060
0130R00000S	Low-pressure Switch Kit	X	X	X	X	X	X	X
ABK-20	Anchor Bracket Kit ◊	X	X	X	X	X	X	X
ASC-01	Anti-Short Cycle Kit	X	X	X	X	X	X	X
AFE18-60A	All-fuel Kit	X	X	X	X	X	X	X
CSR-U-1	Hard-start Kit	X	X	X	X	X	X	X
FSK01A[1]	Freeze Protection Kit	X	X	X	X	X	X	X
OT18-60A[2]	Outdoor Thermostat	X	X	X	X	X	X	X
OT/EHR18-60	Emergency Heat Relay kit	X	X	X	X	X	X	X
TX2N4 [3]	TXV Kit	X						
TX2N4A [3]	TXV Kit	X	X					
TX3N4 [3]	TXV Kit			X	X			
TX5N4 [3]	TXV Kit					X	X	X

◊ Contains 20 brackets; four brackets needed to anchor unit to pad
1 Installed on indoor coil
2 Required for heat pump applications where ambient temperatures fall below 0°F with 50% or higher relative humidity.
3 Condensing units and heat pumps with reciprocating compressors require the use of start-assist components when used in conjunction with an indoor coil using a non-bleed thermal expansion valve refrigerant metering device or liquid line solenoid kit. The TXV should always be sized based on the tonnage of the outdoor unit.

Goodman Manufacturing Company, L.P., reserves the right to discontinue, or change at any time, specifications or designs without notice or without incurring obligations. ©2016 Goodman Manufacturing Company, L.P. • Houston, Texas • Printed in the USA.