Goodman®
Air Conditioning & Heating

GPH13H

Packaged Heat Pump
13 SEER

2 to 5 Tons

Cooling Capacity: 25,000 - 57,000 BTU/h
Heating Capacity: 24,000 - 54,400 BTU/h

Standard Features
- Energy-efficient compressor with internal relief valve
- PSC blower motor; EEM blower motor on 5-ton units
- Quiet horizontal discharge
- Copper tube/aluminum fin coil
- Totally enclosed, permanently lubricated condenser fan motor
- Fully charged system
- Electric heat kit available as a field-installed option
- AHRI Certified; ETL Listed

Cabinet Features
- Heavy-gauge galvanized-steel cabinet
- Attractive Architectural Gray powder-paint finish
- Fully insulated blower compartment has convenient access panels
- Louvered condenser coil protection
- One footprint; three heights

Contents

Nomenclature 2
Accessories 2
Product Specifications 3
Expanded Cooling Data 4
Airflow Data 16
Expanded Heating Data 17
Heat Kit Electrical Data 19
Dimensions 20
Wiring Diagrams 21

10 YEAR PARTS LIMITED WARRANTY*

* Complete warranty details available from your local dealer or at www.goodmanmfg.com. To receive the 10-Year Parts Limited Warranty, online registration must be completed within 60 days of installation. Online registration is not required in California or Québec.

Nomenclature

G	P	H	13	36	H	2	1	A	*
1	2	3	4,5	6,7	8	9	10	11	12

Brand
G Goodman
or Distinctions™

Product Category
P Packaged Unit

Type
H Heat Pump
C Air Conditioner

Efficiency
13 13 SEER
14 14 SEER
15 15 SEER
16 16 SEER

Nominal Capacity
24 2 Tons
30 2½ tons
36 3 Tons
42 3½ Tons
48 4 Tons
60 5 Tons

Configuration
H Horizontal
M Multi-position

Refrigerant
2 R-22
4 R-410A

Voltage Designator
1 208-230/1/60
3 208-230/3/60
4 460/3/60

Engineering
Major Revision

Engineering
Minor Revision

Accessories

Item	Description
OT/EHR18-60	Emergency Heat Relay kit
OT18-60A	Outdoor Thermostat Kit with Lockout Stat
PCCP102/103	Roof Curb for for Medium/Large Chassis
PCE102/103	Downflow Economizer for for Medium/Large Chassis
PCEF102/103	Elbow & Flashing w/ R-8 Liner for Medium/Large Chassis
PCFR102/103	External Horizontal Filter Rack for Medium/Large Chassis
PCMD102/103	Manual Damper for Medium/Large Chassis
PCMDH102/103	Manual Damper for Medium/Large Chassis — Horizontal Applications
PCMDM102/103	Motorized Damper for Medium/Large Chassis
PCP102/103	Downflow Plenum Kit for Medium/Large Chassis
PCP102/103R8	Downflow Plenum Kit for Medium/Large Chassis
SQRPC101	Square-to-Round Adapter for Small Chassis — 16” Rounds
SQRPC102-103	Square-to-Round Adapter for Medium/Large Chassis — 18” Rounds
SQRPCH101	Square-to-Round Adapters Small Chassis for Small Chassis — 16” x 14”
SQRPCH102-103	Square-to-Round Adapters for Medium/Large Chassis — 18” x 14”

Specifications

	GPH13 24H21A*	GPH13 30H21A*	GPH13 36H21A*	GPH13 42H21AE	GPH13 48H21A*	GPH13 60H21A*
Cooling Capacity						
Total BTU/h	25,000	28,600	35,000	41,000	46,400	57,600
Sensible BTU/h	18,800	21,400	26,200	30,800	34,800	43,200
SEER / EER	13.0 / 10.8	13.0 / 10.8	13.0 / 11.0	13.0 / 11.3	13.0 / 10.8	13.0 / 10.9
Decibels	76	76	78	78	80	80
AHRI Numbers	735182	735177	735162	735255	735096	735209
Heating Capacity						
BTU/h (47°F)	24,000	27,400	33,600	38,000	45,000	54,400
C.O.P. (47°F)	3.4	3.2	3.4	3.6	3.3	3.4
BTU/h (17°F)	13,600	15,800	18,000	21,800	23,200	29,400
C.O.P. (17°F)	2.1	2.1	2.1	2.3	2.0	2.1
HSPF	7.7	7.7	7.7	7.8	7.7	7.7
Evaporator Motor						
Type	DD	DD	DD	DD	DD	DD
Wheel (D x W)	9 x 6	9 x 6	9 x 8	10 x 8	10 x 8	11 x 8
Nominal Cooling CFM	875	1,080	1,205	1,410	1,585	1,850
RLA / LRA	1.5 / 2.2	2.4 / 3.2	2.4 / 3.2	3.9 / 4.9	3.9 / 4.9	6.0 / 8.0
No. of Speeds	3	3	3	3	3	3
Horsepower - RPM	¼ - 1,075	⅓ - 1,075	⅓ - 1,075	½ - 1,075	½ - 1,075	¾ - 1,075
Evaporator Coil						
Face Area (ft^2)	4.6	4.6	6.2	6.2	6.2	7.0
Rows Deep / Fins per Inch	3 / 14	3 / 14	3 / 14	4 / 14	4 / 14	4 / 14
Filter Size (ft^2)	20 x 20 x 1	20 x 25 x 1	25 x 25 x 1	(2) 20 x 20 x 1	(2) 20 x 20 x 1	(2) 20 x 25 x 1
Drain Size (NPT)	¾”	¾”	¾”	¾”	¾”	¾”
Refrigerant Charge (oz.)	102	115	145	137	235	245
Condenser Fan / Coil						
Horsepower - RPM	1/6 - 840	1/6 - 840	¼ - 830	¼ - 1075	⅓ - 1075	⅓ - 1075
RLA / LRA	1.1 / 1.7	1.1 / 1.7	1.6 / 3.0	1.6 / 3.3	2.4 / 5.2	2.4 / 5.2
Fan Diameter / # Fan Blades	22 / 3	22 / 3	22 / 3	22 / 3	22 / 4	22 / 4
Face Area (ft^2)	15.2	14.2	17	17	19.1	19.1
Rows Deep/ Fins per Inch	1 / 19	1 / 22	1 / 22	1 / 24	2 / 16	2 / 16
Compressor						
Quantity	1	1	1	1	1	1
Type	Scroll	Scroll	Scroll	Scroll	Scroll	Scroll
Stage	Single	Single	Single	Single	Single	Single
Electrical Data						
Voltage/Phase/ Frequency	208/230-1-60	208/230-1-60	208/230-1-60	208/230-1-60	208/230-1-60	208/230-1-60
Compressor RLA / LRA	13.6 / 63	12.2 / 67	14.5 / 82	16.5 / 95	20.4 / 109	25.0 / 148
Indoor Blower FLA	1.5	2.4	2.4	3.9	3.9	6.0
Outdoor Fan RLA	1.1	1.1	1.5	1.6	2.4	2.4
Total Unit Amps	16.2	15.7	18.5	22.0	26.7	33.4
Min. Circuit Ampacity[1]	19.6	18.7	22.1	26.1	31.9	39.8
Max. Overcurrent Protection[2]	30	30	30	40	50	60
Ship Weight (lbs)	325	325	385	385	415	415

[1] Wire size should be determined in accordance with National Electrical Codes. Extensive wire runs will require larger wire sizes.

[2] Must use time-delay fuses or HACR-type circuit breakers of the same size as noted.

Always check the S&R plate for electrical data on the unit being installed.

Expanded Cooling Data — GPH1324H21*

			Outdoor Ambient Temperature																							
			65ºF				75ºF				85ºF				95ºF				105ºF				115ºF			
			Entering Indoor Wet Bulb Temperature																							
IDB	Airflow		59	63	67	71	59	63	67	71	59	63	67	71	59	63	67	71	59	63	67	71	59	63	67	71
70	956	MBh	24.5	25.4	27.8	-	23.9	24.8	27.2	-	23.4	24.2	26.5	-	22.8	23.6	25.9	-	21.6	22.4	24.6	-	20.1	20.8	22.8	-
		S/T	0.75	0.63	0.44	-	0.78	0.65	0.45	-	0.80	0.67	0.46	-	0.83	0.69	0.48	-	0.86	0.72	0.50	-	0.86	0.72	0.50	-
		ΔT	18	15	12	-	18	16	12	-	18	16	12	-	18	16	12	-	18	15	12	-	17	14	11	-
		kW	1.86	1.90	1.95	-	2.00	2.04	2.10	-	2.12	2.16	2.23	-	2.23	2.27	2.35	-	2.32	2.37	2.44	-	2.40	2.45	2.53	-
		Amps	6.6	6.7	7.0	-	7.1	7.3	7.5	-	7.8	7.9	8.2	-	8.3	8.5	8.8	-	8.8	9.1	9.4	-	9.4	9.6	9.9	-
		Hi PR	153	164	174	-	171	185	195	-	195	210	222	-	222	239	252	-	250	269	284	-	276	297	314	-
		Lo PR	65	69	76	-	69	73	80	-	71	76	83	-	75	80	87	-	79	84	91	-	81	86	94	-
	850	MBh	23.8	24.7	27.0	-	23.2	24.1	26.4	-	22.7	23.5	25.8	-	22.1	22.9	25.1	-	21.0	21.8	23.9	-	19.5	20.2	22.1	-
		S/T	0.72	0.60	0.42	-	0.74	0.62	0.43	-	0.76	0.64	0.44	-	0.79	0.66	0.46	-	0.82	0.68	0.47	-	0.82	0.69	0.48	-
		ΔT	18	16	12	-	19	16	12	-	19	16	12	-	19	16	12	-	19	16	12	-	17	15	11	-
		kW	1.84	1.88	1.94	-	1.98	2.02	2.09	-	2.10	2.15	2.21	-	2.21	2.26	2.33	-	2.30	2.35	2.42	-	2.38	2.43	2.51	-
		Amps	6.5	6.7	6.9	-	7.1	7.2	7.5	-	7.7	7.9	8.1	-	8.2	8.4	8.7	-	8.8	9.0	9.3	-	9.3	9.5	9.8	-
		Hi PR	151	163	172	-	170	183	193	-	193	208	219	-	220	237	250	-	247	266	281	-	273	294	311	-
		Lo PR	64	68	75	-	68	72	79	-	71	75	82	-	74	79	86	-	78	83	90	-	80	86	93	-
	744	MBh	22.0	22.8	24.9	-	21.4	22.2	24.3	-	20.9	21.7	23.8	-	20.4	21.2	23.2	-	19.4	20.1	22.0	-	18.0	18.6	20.4	-
		S/T	0.69	0.58	0.40	-	0.72	0.60	0.42	-	0.74	0.61	0.43	-	0.76	0.63	0.44	-	0.79	0.66	0.46	-	0.80	0.66	0.46	-
		ΔT	19	16	12	-	19	16	13	-	19	16	13	-	19	17	13	-	19	16	12	-	18	15	12	-
		kW	1.80	1.84	1.89	-	1.94	1.98	2.04	-	2.05	2.10	2.16	-	2.16	2.20	2.27	-	2.24	2.29	2.36	-	2.32	2.37	2.44	-
		Amps	6.3	6.5	6.7	-	6.9	7.0	7.3	-	7.5	7.7	7.9	-	8.0	8.2	8.5	-	8.5	8.7	9.0	-	9.0	9.2	9.6	-
		Hi PR	147	158	167	-	165	177	187	-	187	202	213	-	213	230	242	-	240	258	273	-	265	285	301	-
		Lo PR	62	66	73	-	66	70	77	-	69	73	80	-	72	77	84	-	75	80	88	-	78	83	91	-
75	956	MBh	24.9	25.7	27.8	29.8	24.3	25.1	27.1	29.1	23.8	24.5	26.5	28.4	23.2	**23.9**	25.8	27.7	22.0	22.7	24.5	26.3	20.4	21.0	22.7	24.4
		S/T	0.86	0.77	0.58	0.37	0.89	0.79	0.60	0.39	0.91	0.81	0.62	0.40	0.94	**0.84**	0.64	0.41	0.97	0.87	0.66	0.42	0.98	0.88	0.67	0.43
		ΔT	21	19	15	11	21	19	16	11	21	19	16	11	21	**19**	16	11	21	19	16	11	19	18	15	10
		kW	1.87	1.91	1.97	2.03	2.01	2.05	2.12	2.19	2.14	2.18	2.25	2.32	2.24	**2.29**	2.37	2.44	2.34	2.39	2.46	2.55	2.42	2.47	2.55	2.63
		Amps	6.6	6.8	7.0	7.3	7.2	7.4	7.6	7.9	7.8	8.0	8.3	8.6	8.4	**8.6**	8.9	9.2	8.9	9.1	9.5	9.8	9.5	9.7	10.0	10.4
		Hi PR	154	166	175	183	173	186	197	205	197	212	224	233	224	**241**	255	266	252	272	287	299	279	300	317	331
		Lo PR	66	70	76	81	69	74	81	86	72	77	84	89	76	**81**	88	94	79	84	92	98	82	87	95	102
	850	MBh	24.2	24.9	27.0	28.9	23.6	24.3	26.3	28.3	23.1	23.7	25.7	27.6	22.5	**23.2**	25.1	26.9	21.4	22.0	23.8	25.6	19.8	20.4	22.1	23.7
		S/T	0.82	0.73	0.55	0.36	0.85	0.76	0.57	0.37	0.87	0.78	0.59	0.38	0.90	**0.80**	0.61	0.39	0.93	0.83	0.63	0.40	0.94	0.84	0.63	0.41
		ΔT	21	20	16	11	22	20	16	11	22	20	16	11	22	**20**	16	11	21	20	16	11	20	18	15	10
		kW	1.86	1.90	1.96	2.02	2.00	2.04	2.10	2.17	2.12	2.16	2.23	2.30	2.23	**2.27**	2.35	2.42	2.32	2.37	2.44	2.52	2.40	2.45	2.53	2.61
		Amps	6.6	6.7	7.0	7.2	7.1	7.3	7.5	7.8	7.8	7.9	8.2	8.5	8.3	**8.5**	8.8	9.1	8.8	9.1	9.4	9.7	9.4	9.6	9.9	10.3
		Hi PR	153	164	174	181	172	185	195	203	195	210	222	231	222	**239**	252	263	250	269	284	296	276	297	314	327
		Lo PR	65	69	76	80	69	73	80	85	71	76	83	88	75	**80**	87	93	79	84	91	97	81	87	94	101
	744	MBh	22.3	23.0	24.9	26.7	21.8	22.5	24.3	26.1	21.3	21.9	23.7	25.5	20.8	**21.4**	23.1	24.8	19.7	20.3	22.0	23.6	18.3	18.8	20.4	21.9
		S/T	0.79	0.70	0.53	0.34	0.82	0.73	0.55	0.36	0.84	0.75	0.57	0.36	0.86	**0.77**	0.58	0.38	0.90	0.80	0.61	0.39	0.90	0.81	0.61	0.39
		ΔT	22	20	16	11	22	20	17	11	22	20	17	11	22	**20**	17	12	22	20	16	11	20	19	15	11
		kW	1.82	1.85	1.91	1.97	1.95	1.99	2.05	2.12	2.07	2.11	2.18	2.25	2.17	**2.22**	2.29	2.36	2.26	2.31	2.38	2.46	2.34	2.39	2.47	2.55
		Amps	6.4	6.6	6.8	7.0	6.9	7.1	7.3	7.6	7.5	7.7	8.0	8.3	8.1	**8.3**	8.5	8.9	8.6	8.8	9.1	9.4	9.1	9.3	9.6	10.0
		Hi PR	148	160	168	176	166	179	189	197	189	204	215	224	215	**232**	245	255	242	261	275	287	268	288	304	317
		Lo PR	63	67	73	78	67	71	77	82	69	74	80	86	73	**77**	85	90	76	81	89	94	79	84	92	98

IDB: Entering Indoor Dry Bulb Temperature

Shaded area reflects ACCA (TVA) conditions

kW = Total system power

High and low pressures are measured at the liquid and suction service valves.

Amps = outdoor unit amps (comp.+fan)

Expanded Cooling Data — GPH1324H21* (cont.)

			Outdoor Ambient Temperature																							
			65ºF				75ºF				85ºF				95ºF				105ºF				115ºF			
			Entering Indoor Wet Bulb Temperature																							
IDB	Airflow		59	63	67	71	59	63	67	71	59	63	67	71	59	63	67	71	59	63	67	71	59	63	67	71
80	956	MBh	25.4	25.9	27.7	29.6	24.8	25.3	27.0	28.9	24.2	24.7	26.4	28.2	23.6	24.1	25.8	27.5	22.4	22.9	24.5	26.2	20.8	21.2	22.7	24.2
		S/T	0.94	0.88	0.72	0.54	1.00	0.91	0.74	0.56	1.00	0.94	0.76	0.57	1.00	0.97	0.79	0.59	1.00	1.00	0.82	0.61	1.00	1.00	0.82	0.62
		ΔT	23	22	19	15	24	22	19	15	23	22	19	15	23	22	19	16	22	22	19	15	20	20	18	14
		kW	1.89	1.93	1.99	2.05	2.03	2.07	2.14	2.20	2.15	2.20	2.27	2.34	2.26	2.31	2.39	2.46	2.36	2.41	2.48	2.57	2.44	2.49	2.57	2.66
		Amps	6.7	6.9	7.1	7.4	7.3	7.4	7.7	8.0	7.9	8.1	8.4	8.7	8.5	8.7	9.0	9.3	9.0	9.2	9.5	9.9	9.5	9.8	10.1	10.5
		Hi PR	156	168	177	185	175	188	199	207	199	214	226	236	227	244	258	269	255	274	290	302	282	303	320	334
		Lo PR	66	71	77	82	70	75	81	87	73	78	85	90	77	81	89	95	80	85	93	99	83	88	96	103
	850	MBh	24.6	25.2	26.9	28.7	24.0	24.6	26.3	28.1	23.5	24.0	25.6	27.4	22.9	23.4	**25.0**	26.7	21.8	22.2	23.8	25.4	20.2	20.6	22.0	23.5
		S/T	0.90	0.84	0.68	0.51	0.93	0.87	0.71	0.53	0.95	0.89	0.73	0.54	0.98	0.92	**0.75**	0.56	1.00	0.96	0.78	0.58	1.00	0.96	0.78	0.59
		ΔT	24	23	20	16	24	23	20	16	24	23	20	16	24	23	**20**	16	24	23	20	16	22	21	19	15
		kW	1.87	1.91	1.97	2.03	2.01	2.06	2.12	2.19	2.14	2.18	2.25	2.32	2.24	2.29	**2.37**	2.44	2.34	2.39	2.46	2.55	2.42	2.47	2.55	2.63
		Amps	6.6	6.8	7.0	7.3	7.2	7.4	7.6	7.9	7.8	8.0	8.3	8.6	8.4	8.6	**8.9**	9.2	8.9	9.1	9.5	9.8	9.5	9.7	10.0	10.4
		Hi PR	154	166	175	183	173	186	197	205	197	212	224	234	224	241	**255**	266	252	272	287	299	279	300	317	331
		Lo PR	66	70	76	81	69	74	81	86	72	77	84	89	76	81	**88**	94	79	84	92	98	82	87	95	102
	744	MBh	22.7	23.2	24.8	26.5	22.2	22.7	24.2	25.9	21.7	22.1	23.7	25.3	21.1	21.6	23.1	24.7	20.1	20.5	21.9	23.4	18.6	19.0	20.3	21.7
		S/T	0.86	0.81	0.66	0.49	0.90	0.84	0.68	0.51	0.92	0.86	0.70	0.52	0.95	0.89	0.72	0.54	0.98	0.92	0.75	0.56	0.99	0.93	0.76	0.57
		ΔT	24	23	20	16	25	24	20	16	25	24	20	16	25	24	21	16	24	23	20	16	23	22	19	15
		kW	1.83	1.87	1.92	1.98	1.97	2.01	2.07	2.13	2.08	2.13	2.20	2.27	2.19	2.24	2.31	2.38	2.28	2.33	2.40	2.48	2.36	2.41	2.49	2.57
		Amps	6.5	6.6	6.8	7.1	7.0	7.2	7.4	7.7	7.6	7.8	8.1	8.4	8.1	8.3	8.6	9.0	8.7	8.9	9.2	9.5	9.2	9.4	9.7	10.1
		Hi PR	150	161	170	177	168	181	191	199	191	206	217	227	218	234	247	258	245	264	278	290	271	291	307	321
		Lo PR	64	68	74	79	67	72	78	83	70	74	81	87	73	78	85	91	77	82	89	95	80	85	93	99
85	956	MBh	25.8	26.3	27.5	29.4	25.2	25.7	26.9	28.7	24.6	25.1	26.3	28.0	24.0	24.5	25.6	27.3	22.8	23.2	24.3	26.0	21.1	21.5	22.5	24.1
		S/T	0.98	0.95	0.86	0.70	1.00	0.98	0.89	0.72	1.00	1.00	0.91	0.74	1.00	1.00	0.94	0.76	1.00	1.00	0.98	0.79	1.00	1.00	0.98	0.80
		ΔT	24	24	23	20	24	24	23	20	24	24	23	20	23	24	23	20	22	22	23	20	20	21	21	18
		kW	1.90	1.94	2.00	2.06	2.04	2.09	2.15	2.22	2.17	2.22	2.29	2.36	2.28	2.33	2.40	2.48	2.37	2.43	2.51	2.59	2.46	2.51	2.59	2.68
		Amps	6.8	6.9	7.2	7.4	7.3	7.5	7.8	8.1	8.0	8.2	8.4	8.8	8.5	8.7	9.0	9.4	9.1	9.3	9.6	10.0	9.6	9.9	10.2	10.6
		Hi PR	157	169	179	187	177	190	201	209	201	216	228	238	229	246	260	271	258	277	293	305	285	306	323	337
		Lo PR	67	71	78	83	71	75	82	88	74	78	85	91	77	82	90	96	81	86	94	100	84	89	97	104
	850	MBh	25.0	25.5	26.7	28.5	24.5	24.9	26.1	27.9	23.9	24.3	25.5	27.2	23.3	23.8	24.9	26.5	22.1	22.6	23.6	25.2	20.5	20.9	21.9	23.4
		S/T	0.94	0.91	0.82	0.66	0.97	0.94	0.85	0.69	1.00	0.96	0.87	0.71	1.00	0.99	0.90	0.73	1.00	1.00	0.93	0.76	1.00	1.00	0.94	0.76
		ΔT	25	25	24	20	26	25	24	21	26	25	24	21	25	26	24	21	24	24	24	21	22	23	22	19
		kW	1.89	1.93	1.99	2.05	2.03	2.07	2.14	2.20	2.15	2.20	2.27	2.34	2.26	2.31	2.39	2.46	2.36	2.41	2.48	2.57	2.44	2.49	2.57	2.66
		Amps	6.7	6.9	7.1	7.4	7.3	7.4	7.7	8.0	7.9	8.1	8.4	8.7	8.5	8.7	9.0	9.3	9.0	9.2	9.5	9.9	9.5	9.8	10.1	10.5
		Hi PR	156	168	177	185	175	188	199	207	199	214	226	236	227	244	258	269	255	274	290	302	282	303	320	334
		Lo PR	66	71	77	82	70	75	81	87	73	78	85	90	77	81	89	95	80	85	93	99	83	88	96	103
	744	MBh	23.1	23.6	24.7	26.3	22.6	23.0	24.1	25.7	22.0	22.5	23.5	25.1	21.5	21.9	23.0	24.5	20.4	20.8	21.8	23.3	18.9	19.3	20.2	21.6
		S/T	0.91	0.87	0.79	0.64	0.94	0.91	0.82	0.66	0.96	0.93	0.84	0.68	0.99	0.96	0.86	0.70	1.00	0.99	0.90	0.73	1.00	1.00	0.91	0.73
		ΔT	26	25	24	21	26	26	24	21	26	26	24	21	26	26	25	21	25	26	24	21	23	24	23	20
		kW	1.84	1.88	1.94	2.00	1.98	2.02	2.08	2.15	2.10	2.15	2.21	2.28	2.21	2.25	2.33	2.40	2.30	2.35	2.42	2.50	2.38	2.43	2.51	2.59
		Amps	6.5	6.7	6.9	7.2	7.1	7.2	7.5	7.8	7.7	7.9	8.1	8.4	8.2	8.4	8.7	9.0	8.7	9.0	9.3	9.6	9.3	9.5	9.8	10.2
		Hi PR	151	163	172	179	170	183	193	201	193	208	219	229	220	237	250	261	247	266	281	293	273	294	311	324
		Lo PR	64	68	75	80	68	72	79	84	71	75	82	87	74	79	86	92	78	83	90	96	80	86	93	100

IDB: Entering Indoor Dry Bulb Temperature

Shaded area reflects AHRI conditions

kW = Total system power

High and low pressures are measured at the liquid and suction service valves.

Amps = outdoor unit amps (comp.+fan)

Expanded Cooling Data — GPH1330H21*

			Outdoor Ambient Temperature																							
			65ºF				75ºF				85ºF				95ºF				105ºF				115ºF			
			Entering Indoor Wet Bulb Temperature																							
IDB	Airflow		59	63	67	71	59	63	67	71	59	63	67	71	59	63	67	71	59	63	67	71	59	63	67	71
70	1181	MBh	28.0	29.0	31.8	-	27.4	28.4	31.1	-	26.7	27.7	30.3	-	26.1	27.0	29.6	-	24.8	25.7	28.1	-	22.9	23.8	26.1	-
		S/T	0.75	0.63	0.44	-	0.78	0.65	0.45	-	0.80	0.67	0.46	-	0.83	0.69	0.48	-	0.86	0.72	0.50	-	0.86	0.72	0.50	-
		ΔT	16	14	11	-	17	14	11	-	17	14	11	-	17	15	11	-	17	14	11	-	15	13	10	-
		kW	2.06	2.10	2.17	-	2.22	2.26	2.33	-	2.35	2.41	2.48	-	2.48	2.53	2.61	-	2.58	2.64	2.72	-	2.67	2.73	2.82	-
		Amps	7.5	7.7	8.0	-	8.2	8.4	8.6	-	8.9	9.1	9.4	-	9.5	9.7	10.1	-	10.1	10.4	10.7	-	10.7	11.0	11.4	-
		Hi PR	156	168	177	-	175	188	199	-	199	214	226	-	226	244	257	-	255	274	290	-	281	303	320	-
		Lo PR	64	68	75	-	68	72	79	-	71	75	82	-	74	79	86	-	78	83	90	-	80	86	93	-
	1050	MBh	27.2	28.2	30.9	-	26.6	27.5	30.2	-	25.9	26.9	29.5	-	25.3	26.2	28.7	-	24.0	24.9	27.3	-	22.3	23.1	25.3	-
		S/T	0.72	0.60	0.42	-	0.74	0.62	0.43	-	0.76	0.64	0.44	-	0.79	0.66	0.46	-	0.82	0.68	0.47	-	0.82	0.69	0.48	-
		ΔT	17	15	11	-	17	15	11	-	17	15	11	-	17	15	11	-	17	15	11	-	16	14	11	-
		kW	2.04	2.08	2.15	-	2.20	2.24	2.32	-	2.33	2.39	2.46	-	2.46	2.51	2.59	-	2.56	2.62	2.70	-	2.65	2.71	2.80	-
		Amps	7.5	7.6	7.9	-	8.1	8.3	8.6	-	8.8	9.0	9.3	-	9.4	9.6	10.0	-	10.0	10.3	10.6	-	10.6	10.9	11.3	-
		Hi PR	154	166	175	-	173	186	197	-	197	212	224	-	224	241	255	-	252	271	287	-	279	300	317	-
		Lo PR	64	68	74	-	67	72	78	-	70	74	81	-	73	78	85	-	77	82	89	-	80	85	92	-
	919	MBh	25.1	26.0	28.5	-	24.5	25.4	27.9	-	23.9	24.8	27.2	-	23.4	24.2	26.5	-	22.2	23.0	25.2	-	20.6	21.3	23.3	-
		S/T	0.69	0.58	0.40	-	0.72	0.60	0.42	-	0.74	0.61	0.43	-	0.76	0.63	0.44	-	0.79	0.66	0.46	-	0.80	0.66	0.46	-
		ΔT	17	15	11	-	18	15	12	-	18	15	12	-	18	15	12	-	18	15	12	-	16	14	11	-
		kW	1.99	2.04	2.10	-	2.14	2.19	2.26	-	2.28	2.33	2.40	-	2.40	2.45	2.53	-	2.50	2.55	2.63	-	2.58	2.64	2.73	-
		Amps	7.3	7.4	7.7	-	7.9	8.0	8.3	-	8.5	8.8	9.1	-	9.1	9.4	9.7	-	9.7	10.0	10.3	-	10.3	10.6	11.0	-
		Hi PR	150	161	170	-	168	181	191	-	191	206	217	-	217	234	247	-	245	263	278	-	270	291	307	-
		Lo PR	62	66	72	-	65	69	76	-	68	72	79	-	71	76	83	-	75	79	87	-	77	82	90	-
75	1181	MBh	28.5	29.3	31.8	34.1	27.8	28.7	31.0	33.3	27.2	28.0	30.3	32.5	26.5	**27.3**	29.5	31.7	25.2	25.9	28.1	30.1	23.3	24.0	26.0	27.9
		S/T	0.86	0.77	0.58	0.37	0.89	0.79	0.60	0.39	0.91	0.81	0.62	0.40	0.94	**0.84**	0.64	0.41	0.97	0.87	0.66	0.42	0.98	0.88	0.67	0.43
		ΔT	19	17	14	10	19	18	15	10	19	18	15	10	19	**18**	15	10	19	18	14	10	18	16	13	9
		kW	2.07	2.12	2.18	2.25	2.23	2.28	2.35	2.43	2.37	2.43	2.50	2.59	2.50	**2.55**	2.64	2.72	2.60	2.66	2.75	2.84	2.69	2.75	2.84	2.94
		Amps	7.6	7.8	8.0	8.4	8.2	8.4	8.7	9.1	9.0	9.2	9.5	9.9	9.6	**9.8**	10.2	10.6	10.2	10.5	10.8	11.3	10.8	11.1	11.5	12.0
		Hi PR	157	169	179	187	177	190	201	209	201	216	228	238	229	**246**	260	271	257	277	292	305	284	306	323	337
		Lo PR	65	69	75	80	69	73	80	85	71	76	83	88	75	**80**	87	93	78	84	91	97	81	86	94	100
	1050	MBh	27.7	28.5	30.8	33.1	27.0	27.8	30.1	32.3	26.4	27.2	29.4	31.6	25.7	**26.5**	28.7	30.8	24.5	25.2	27.3	29.2	22.7	23.3	25.2	27.1
		S/T	0.82	0.73	0.55	0.36	0.85	0.76	0.57	0.37	0.87	0.78	0.59	0.38	0.90	**0.80**	0.61	0.39	0.93	0.83	0.63	0.40	0.94	0.84	0.63	0.41
		ΔT	20	18	15	10	20	18	15	10	20	18	15	10	20	**19**	15	11	20	18	15	10	19	17	14	10
		kW	2.06	2.10	2.17	2.24	2.22	2.26	2.34	2.41	2.35	2.41	2.48	2.57	2.48	**2.53**	2.61	2.70	2.58	2.64	2.73	2.82	2.67	2.73	2.82	2.92
		Amps	7.5	7.7	8.0	8.3	8.2	8.4	8.6	9.0	8.9	9.1	9.4	9.8	9.5	**9.7**	10.1	10.5	10.1	10.4	10.7	11.2	10.7	11.0	11.4	11.8
		Hi PR	156	168	177	185	175	188	199	207	199	214	226	236	227	**244**	257	268	255	274	290	302	282	303	320	334
		Lo PR	64	68	75	80	68	72	79	84	71	75	82	87	74	**79**	86	92	78	83	90	96	80	86	93	99
	919	MBh	25.5	26.3	28.5	30.5	24.9	25.7	27.8	29.8	24.4	25.1	27.1	29.1	23.8	**24.5**	26.5	28.4	22.6	23.2	25.2	27.0	20.9	21.5	23.3	25.0
		S/T	0.79	0.70	0.53	0.34	0.82	0.73	0.55	0.36	0.84	0.75	0.57	0.36	0.86	**0.77**	0.58	0.38	0.90	0.80	0.61	0.39	0.90	0.81	0.61	0.39
		ΔT	20	19	15	10	20	19	15	11	20	19	15	11	21	**19**	15	11	20	19	15	11	19	17	14	10
		kW	2.01	2.05	2.12	2.18	2.16	2.21	2.28	2.35	2.30	2.35	2.42	2.50	2.42	**2.47**	2.55	2.63	2.52	2.57	2.66	2.75	2.60	2.66	2.75	2.84
		Amps	7.3	7.5	7.8	8.0	7.9	8.1	8.4	8.7	8.6	8.8	9.1	9.5	9.2	**9.5**	9.8	10.2	9.8	10.1	10.4	10.8	10.4	10.7	11.1	11.5
		Hi PR	151	163	172	179	170	183	193	201	193	208	219	229	220	**236**	250	260	247	266	281	293	273	294	310	324
		Lo PR	62	66	72	77	66	70	77	82	68	73	80	85	72	**77**	84	89	75	80	88	93	78	83	91	96

IDB: Entering Indoor Dry Bulb Temperature
High and low pressures are measured at the liquid and suction service valves.

Shaded area reflects ACCA (TVA) conditions

kW = Total system power
Amps = outdoor unit amps (comp.+fan)

Expanded Cooling Data — GPH1330H21* (cont.)

			Outdoor Ambient Temperature																							
			65ºF				75ºF				85ºF				95ºF				105ºF				115ºF			
			Entering Indoor Wet Bulb Temperature																							
IDB	Airflow		59	63	67	71	59	63	67	71	59	63	67	71	59	63	67	71	59	63	67	71	59	63	67	71
80	1181	MBh	29.0	29.6	31.7	33.9	28.3	29.0	30.9	33.1	27.7	28.3	30.2	32.3	27.0	27.6	29.5	31.5	25.6	26.2	28.0	29.9	23.7	24.3	25.9	27.7
		S/T	0.94	0.88	0.72	0.54	1.00	0.91	0.74	0.56	1.00	0.94	0.76	0.57	1.00	0.97	0.79	0.59	1.00	1.00	0.82	0.61	1.00	1.00	0.82	0.62
		ΔT	21	20	18	14	22	21	18	14	22	21	18	14	21	21	18	14	20	20	18	14	18	19	17	13
		kW	2.09	2.14	2.20	2.27	2.25	2.30	2.37	2.45	2.39	2.45	2.52	2.61	2.52	2.57	2.66	2.75	2.62	2.68	2.77	2.86	2.72	2.78	2.87	2.97
		Amps	7.7	7.9	8.1	8.4	8.3	8.5	8.8	9.1	9.0	9.3	9.6	10.0	9.7	9.9	10.3	10.7	10.3	10.6	10.9	11.4	11.0	11.2	11.6	12.1
		Hi PR	159	171	181	188	178	192	203	211	203	218	231	240	231	249	263	274	260	280	295	308	287	309	326	340
		Lo PR	66	70	76	81	69	74	80	86	72	77	84	89	76	80	88	94	79	84	92	98	82	87	95	101
	1050	MBh	28.2	28.8	30.7	32.9	27.5	28.1	30.0	32.1	26.9	27.4	29.3	31.3	26.2	26.8	**28.6**	30.6	24.9	25.4	27.2	29.0	23.1	23.6	25.2	26.9
		S/T	0.90	0.84	0.68	0.51	0.93	0.87	0.71	0.53	0.95	0.89	0.73	0.54	0.98	0.92	**0.75**	0.56	1.00	0.96	0.78	0.58	1.00	0.96	0.78	0.59
		ΔT	22	21	18	15	22	21	19	15	22	21	19	15	23	22	**19**	15	22	21	19	15	20	20	17	14
		kW	2.07	2.12	2.19	2.25	2.23	2.28	2.35	2.43	2.37	2.43	2.50	2.59	2.50	2.55	**2.64**	2.72	2.60	2.66	2.75	2.84	2.69	2.75	2.85	2.94
		Amps	7.6	7.8	8.0	8.4	8.2	8.4	8.7	9.1	9.0	9.2	9.5	9.9	9.6	9.8	**10.2**	10.6	10.2	10.5	10.8	11.3	10.8	11.1	11.5	12.0
		Hi PR	157	169	179	187	177	190	201	209	201	216	228	238	229	246	**260**	271	257	277	293	305	284	306	323	337
		Lo PR	65	69	75	80	69	73	80	85	71	76	83	88	75	80	**87**	93	79	84	91	97	81	86	94	100
	919	MBh	26.0	26.6	28.4	30.3	25.4	25.9	27.7	29.6	24.8	25.3	27.1	28.9	24.2	24.7	26.4	28.2	23.0	23.5	25.1	26.8	21.3	21.7	23.2	24.8
		S/T	0.86	0.81	0.66	0.49	0.90	0.84	0.68	0.51	0.92	0.86	0.70	0.52	0.95	0.89	0.72	0.54	0.98	0.92	0.75	0.56	0.99	0.93	0.76	0.57
		ΔT	22	22	19	15	23	22	19	15	23	22	19	15	23	22	19	15	23	22	19	15	21	20	18	14
		kW	2.03	2.07	2.13	2.20	2.18	2.23	2.30	2.37	2.32	2.37	2.44	2.52	2.44	2.49	2.57	2.66	2.54	2.59	2.68	2.77	2.63	2.68	2.77	2.87
		Amps	7.4	7.6	7.8	8.1	8.0	8.2	8.5	8.8	8.7	8.9	9.2	9.6	9.3	9.6	9.9	10.3	9.9	10.2	10.5	10.9	10.5	10.8	11.2	11.6
		Hi PR	153	164	174	181	171	184	195	203	195	210	221	231	222	239	252	263	250	269	284	296	276	297	313	327
		Lo PR	63	67	73	78	67	71	77	82	69	74	80	86	73	77	84	90	76	81	88	94	79	84	91	97
85	1181	MBh	29.5	30.1	31.5	33.6	28.8	29.4	30.8	32.8	28.1	28.7	30.0	32.1	27.5	28.0	29.3	31.3	26.1	26.6	27.8	29.7	24.2	24.6	25.8	27.5
		S/T	0.98	0.95	0.86	0.70	1.00	0.98	0.89	0.72	1.00	1.00	0.91	0.74	1.00	1.00	0.94	0.76	1.00	1.00	0.98	0.79	1.00	1.00	0.98	0.80
		ΔT	23	22	21	18	22	23	21	18	22	22	21	18	21	22	21	19	20	21	21	18	19	19	20	17
		kW	2.11	2.15	2.22	2.29	2.27	2.32	2.39	2.47	2.41	2.47	2.55	2.63	2.54	2.59	2.68	2.77	2.65	2.71	2.79	2.89	2.74	2.80	2.89	2.99
		Amps	7.7	7.9	8.2	8.5	8.4	8.6	8.9	9.2	9.1	9.4	9.7	10.1	9.8	10.0	10.4	10.8	10.4	10.7	11.0	11.5	11.1	11.3	11.7	12.2
		Hi PR	161	173	182	190	180	194	205	214	205	221	233	243	233	251	265	277	263	283	298	311	290	312	330	344
		Lo PR	66	70	77	82	70	74	81	87	73	77	84	90	76	81	89	95	80	85	93	99	83	88	96	102
	1050	MBh	28.7	29.2	30.6	32.6	28.0	28.5	29.9	31.9	27.3	27.9	29.2	31.1	26.7	27.2	28.5	30.4	25.3	25.8	27.0	28.8	23.5	23.9	25.0	26.7
		S/T	0.94	0.91	0.82	0.66	0.97	0.94	0.85	0.69	1.00	0.96	0.87	0.71	1.00	0.99	0.90	0.73	1.00	1.00	0.93	0.76	1.00	1.00	0.94	0.76
		ΔT	24	23	22	19	24	23	22	19	24	23	22	19	23	24	22	19	22	23	22	19	21	21	21	18
		kW	2.09	2.14	2.20	2.27	2.25	2.30	2.37	2.45	2.39	2.45	2.52	2.61	2.52	2.57	2.66	2.75	2.62	2.68	2.77	2.86	2.72	2.78	2.87	2.97
		Amps	7.7	7.9	8.1	8.4	8.3	8.5	8.8	9.1	9.0	9.3	9.6	10.0	9.7	9.9	10.3	10.7	10.3	10.6	10.9	11.4	11.0	11.2	11.6	12.1
		Hi PR	159	171	181	188	178	192	203	211	203	218	231	240	231	249	263	274	260	280	295	308	287	309	326	340
		Lo PR	66	70	76	81	69	74	80	86	72	77	84	89	76	80	88	94	79	84	92	98	82	87	95	101
	919	MBh	26.4	27.0	28.2	30.1	25.8	26.3	27.6	29.4	25.2	25.7	26.9	28.7	24.6	25.1	26.3	28.0	23.4	23.8	25.0	26.6	21.7	22.1	23.1	24.7
		S/T	0.91	0.87	0.79	0.64	0.94	0.91	0.82	0.66	0.96	0.93	0.84	0.68	0.99	0.96	0.86	0.70	1.00	0.99	0.90	0.73	1.00	1.00	0.91	0.73
		ΔT	24	24	22	19	24	24	23	20	24	24	23	20	24	24	23	20	23	24	22	19	22	22	21	18
		kW	2.04	2.08	2.15	2.22	2.20	2.24	2.32	2.39	2.33	2.39	2.46	2.54	2.46	2.51	2.59	2.68	2.56	2.62	2.70	2.79	2.65	2.71	2.80	2.89
		Amps	7.5	7.6	7.9	8.2	8.1	8.3	8.6	8.9	8.8	9.0	9.3	9.7	9.4	9.6	10.0	10.4	10.0	10.3	10.6	11.0	10.6	10.9	11.3	11.7
		Hi PR	154	166	175	183	173	186	197	205	197	212	224	233	224	241	255	266	252	271	287	299	279	300	317	330
		Lo PR	64	68	74	79	67	72	78	83	70	74	81	86	73	78	85	91	77	82	89	95	80	85	92	98

IDB: Entering Indoor Dry Bulb Temperature
High and low pressures are measured at the liquid and suction service valves.

Shaded area reflects AHRI conditions

kW = Total system power
Amps = outdoor unit amps (comp.+fan)

Expanded Cooling Data — GPH1336H21*

			Outdoor Ambient Temperature																							
			65ºF				75ºF				85ºF				95ºF				105ºF				115ºF			
			Entering Indoor Wet Bulb Temperature																							
IDB	Airflow		59	63	67	71	59	63	67	71	59	63	67	71	59	63	67	71	59	63	67	71	59	63	67	71
70	1406	MBh	34.3	35.5	38.9	-	33.5	34.7	38.0	-	32.7	33.9	37.1	-	31.9	33.1	36.2	-	30.3	31.4	34.4	-	28.1	29.1	31.9	-
		S/T	0.75	0.63	0.44	-	0.78	0.65	0.45	-	0.80	0.67	0.46	-	0.83	0.69	0.48	-	0.86	0.72	0.50	-	0.86	0.72	0.50	-
		ΔT	17	15	11	-	17	15	11	-	17	15	11	-	17	15	11	-	17	15	11	-	16	14	10	-
		kW	2.35	2.40	2.48	-	2.54	2.59	2.68	-	2.70	2.76	2.86	-	2.85	2.91	3.01	-	2.97	3.04	3.14	-	3.08	3.15	3.25	-
		Amps	9.3	9.5	9.8	-	10.0	10.3	10.7	-	11.0	11.2	11.6	-	11.7	12.0	12.4	-	12.5	12.8	13.3	-	13.3	13.6	14.1	-
		Hi PR	150	161	170	-	168	181	191	-	191	206	217	-	218	234	247	-	245	264	278	-	271	291	308	-
		Lo PR	63	67	73	-	66	71	77	-	69	73	80	-	72	77	84	-	76	81	88	-	79	84	91	-
	1250	MBh	33.3	34.5	37.8	-	32.5	33.7	36.9	-	31.7	32.9	36.1	-	31.0	32.1	35.2	-	29.4	30.5	33.4	-	27.3	28.3	31.0	-
		S/T	0.72	0.60	0.42	-	0.74	0.62	0.43	-	0.76	0.64	0.44	-	0.79	0.66	0.46	-	0.82	0.68	0.47	-	0.82	0.69	0.48	-
		ΔT	18	15	12	-	18	15	12	-	18	15	12	-	18	16	12	-	18	15	12	-	17	14	11	-
		kW	2.33	2.38	2.46	-	2.52	2.57	2.66	-	2.68	2.74	2.83	-	2.82	2.89	2.98	-	2.95	3.01	3.11	-	3.05	3.12	3.23	-
		Amps	9.2	9.4	9.7	-	10.0	10.2	10.6	-	10.9	11.1	11.5	-	11.6	11.9	12.3	-	12.4	12.7	13.2	-	13.2	13.5	14.0	-
		Hi PR	148	160	169	-	166	179	189	-	189	204	215	-	216	232	245	-	243	261	276	-	268	288	305	-
		Lo PR	62	66	72	-	66	70	76	-	68	73	79	-	72	76	83	-	75	80	87	-	78	83	90	-
	1094	MBh	30.7	31.9	34.9	-	30.0	31.1	34.1	-	29.3	30.4	33.3	-	28.6	29.6	32.5	-	27.2	28.2	30.8	-	25.2	26.1	28.6	-
		S/T	0.69	0.58	0.40	-	0.72	0.60	0.42	-	0.74	0.61	0.43	-	0.76	0.63	0.44	-	0.79	0.66	0.46	-	0.80	0.66	0.46	-
		ΔT	18	15	12	-	18	16	12	-	18	16	12	-	18	16	12	-	18	16	12	-	17	15	11	-
		kW	2.28	2.33	2.40	-	2.46	2.51	2.59	-	2.61	2.67	2.76	-	2.75	2.81	2.91	-	2.87	2.93	3.03	-	2.97	3.04	3.14	-
		Amps	8.9	9.1	9.5	-	9.7	9.9	10.3	-	10.5	10.8	11.2	-	11.3	11.6	12.0	-	12.0	12.3	12.8	-	12.8	13.1	13.6	-
		Hi PR	144	155	164	-	161	174	183	-	184	198	209	-	209	225	238	-	235	253	267	-	260	280	295	-
		Lo PR	60	64	70	-	64	68	74	-	66	70	77	-	70	74	81	-	73	78	85	-	75	80	88	-
75	1406	MBh	34.9	35.9	38.9	41.7	34.1	35.1	38.0	40.7	33.3	34.2	37.1	39.8	32.4	**33.4**	36.2	38.8	30.8	31.7	34.4	36.9	28.6	29.4	31.8	34.2
		S/T	0.86	0.77	0.58	0.37	0.89	0.79	0.60	0.39	0.91	0.81	0.62	0.40	0.94	**0.84**	0.64	0.41	0.97	0.87	0.66	0.42	0.98	0.88	0.67	0.43
		ΔT	20	18	15	10	20	18	15	10	20	18	15	10	20	**18**	15	10	20	18	15	10	18	17	14	10
		kW	2.37	2.42	2.50	2.59	2.56	2.62	2.70	2.79	2.73	2.79	2.88	2.98	2.87	**2.94**	3.04	3.14	3.00	3.06	3.17	3.28	3.10	3.17	3.28	3.40
		Amps	9.4	9.6	9.9	10.3	10.1	10.4	10.8	11.2	11.1	11.3	11.7	12.2	11.8	**12.1**	12.6	13.1	12.6	13.0	13.4	13.9	13.4	13.8	14.2	14.8
		Hi PR	151	163	172	179	170	183	193	201	193	208	219	229	220	**237**	250	261	247	266	281	293	273	294	311	324
		Lo PR	63	67	74	78	67	71	78	83	70	74	81	86	73	**78**	85	91	77	82	89	95	79	84	92	98
	1250	MBh	33.9	34.9	37.7	40.5	33.1	34.1	36.9	39.6	32.3	33.2	36.0	38.6	31.5	**32.4**	35.1	37.7	29.9	30.8	33.3	35.8	27.7	28.5	30.9	33.2
		S/T	0.82	0.73	0.55	0.36	0.85	0.76	0.57	0.37	0.87	0.78	0.59	0.38	0.90	**0.80**	0.61	0.39	0.93	0.83	0.63	0.40	0.94	0.84	0.63	0.41
		ΔT	20	19	15	11	21	19	16	11	21	19	16	11	21	**19**	16	11	20	19	15	11	19	18	14	10
		kW	2.35	2.40	2.48	2.56	2.54	2.60	2.68	2.77	2.70	2.76	2.86	2.95	2.85	**2.91**	3.01	3.11	2.97	3.04	3.14	3.25	3.08	3.15	3.25	3.37
		Amps	9.3	9.5	9.8	10.2	10.1	10.3	10.7	11.1	11.0	11.2	11.6	12.1	11.7	**12.0**	12.5	12.9	12.5	12.8	13.3	13.8	13.3	13.6	14.1	14.7
		Hi PR	150	161	170	178	168	181	191	199	191	206	217	227	218	**234**	248	258	245	264	278	290	271	291	308	321
		Lo PR	63	67	73	78	66	71	77	82	69	73	80	85	72	**77**	84	90	76	81	88	94	79	84	91	97
	1094	MBh	31.3	32.2	34.8	37.4	30.5	31.4	34.0	36.5	29.8	30.7	33.2	35.6	29.1	**29.9**	32.4	34.8	27.6	28.4	30.8	33.0	25.6	26.3	28.5	30.6
		S/T	0.79	0.70	0.53	0.34	0.82	0.73	0.55	0.36	0.84	0.75	0.57	0.36	0.86	**0.77**	0.58	0.38	0.90	0.80	0.61	0.39	0.90	0.81	0.61	0.39
		ΔT	21	19	16	11	21	19	16	11	21	19	16	11	21	**19**	16	11	21	19	16	11	19	18	15	10
		kW	2.30	2.35	2.42	2.50	2.48	2.53	2.61	2.70	2.64	2.69	2.78	2.88	2.78	**2.84**	2.93	3.03	2.89	2.96	3.06	3.17	3.00	3.07	3.17	3.28
		Amps	9.0	9.2	9.5	9.9	9.8	10.0	10.4	10.8	10.6	10.9	11.3	11.7	11.4	**11.7**	12.1	12.6	12.2	12.5	12.9	13.4	12.9	13.2	13.7	14.2
		Hi PR	145	156	165	172	163	176	185	193	185	200	211	220	211	**227**	240	250	238	256	270	282	263	283	298	311
		Lo PR	61	65	71	75	64	68	75	80	67	71	78	83	70	**75**	82	87	74	78	86	91	76	81	88	94

IDB: Entering Indoor Dry Bulb Temperature
High and low pressures are measured at the liquid and suction service valves.

Shaded area reflects ACCA (TVA) conditions

kW = Total system power
Amps = outdoor unit amps (comp.+fan)

Expanded Cooling Data — GPH1336H21* (cont.)

			Outdoor Ambient Temperature																							
			65ºF				75ºF				85ºF				95ºF				105ºF				115ºF			
			Entering Indoor Wet Bulb Temperature																							
IDB	Airflow		59	63	67	71	59	63	67	71	59	63	67	71	59	63	67	71	59	63	67	71	59	63	67	71
80	1406	MBh	35.5	36.3	38.8	41.4	34.7	35.4	37.9	40.5	33.8	34.6	37.0	39.5	33.0	33.7	36.1	38.5	31.4	32.1	34.2	36.6	29.1	29.7	31.7	33.9
		S/T	0.94	0.88	0.72	0.54	1.00	0.91	0.74	0.56	1.00	0.94	0.76	0.57	1.00	0.97	0.79	0.59	1.00	1.00	0.82	0.61	1.00	1.00	0.82	0.62
		ΔT	22	21	18	15	23	21	18	15	22	21	18	15	22	21	19	15	21	21	18	15	19	19	17	14
		kW	2.39	2.44	2.52	2.61	2.58	2.64	2.73	2.82	2.75	2.81	2.90	3.00	2.90	2.96	3.06	3.17	3.02	3.09	3.20	3.31	3.13	3.20	3.31	3.43
		Amps	9.4	9.7	10.0	10.4	10.2	10.5	10.9	11.3	11.2	11.4	11.8	12.3	12.0	12.3	12.7	13.2	12.8	13.1	13.5	14.1	13.5	13.9	14.4	14.9
		Hi PR	153	165	174	181	172	185	195	203	195	210	222	231	222	239	253	263	250	269	284	296	276	297	314	327
		Lo PR	64	68	74	79	68	72	79	84	70	75	82	87	74	79	86	91	77	82	90	96	80	85	93	99
	1250	MBh	34.5	35.2	37.6	40.2	33.7	34.4	36.8	39.3	32.9	33.6	35.9	38.4	32.1	32.8	**35.0**	37.4	30.5	31.1	33.3	35.5	28.2	28.8	30.8	32.9
		S/T	0.90	0.84	0.68	0.51	0.93	0.87	0.71	0.53	0.95	0.89	0.73	0.54	0.98	0.92	**0.75**	0.56	1.00	0.96	0.78	0.58	1.00	0.96	0.78	0.59
		ΔT	23	22	19	15	23	22	19	15	23	22	19	15	23	22	**19**	15	22	22	19	15	21	20	18	14
		kW	2.37	2.42	2.50	2.59	2.56	2.62	2.70	2.79	2.73	2.79	2.88	2.98	2.87	2.94	**##**	3.14	3.00	3.06	3.17	3.28	3.10	3.17	3.28	3.40
		Amps	9.4	9.6	9.9	10.3	10.1	10.4	10.8	11.2	11.1	11.3	11.7	12.2	11.9	12.2	**12.6**	13.1	12.6	13.0	13.4	13.9	13.4	13.8	14.2	14.8
		Hi PR	151	163	172	179	170	183	193	201	193	208	220	229	220	237	**250**	261	248	266	281	293	273	294	311	324
		Lo PR	63	68	74	78	67	71	78	83	70	74	81	86	73	78	**85**	91	77	82	89	95	79	84	92	98
	1094	MBh	31.8	32.5	34.7	37.1	31.1	31.7	33.9	36.3	30.3	31.0	33.1	35.4	29.6	30.2	32.3	34.5	28.1	28.7	30.7	32.8	26.0	26.6	28.4	30.4
		S/T	0.86	0.81	0.66	0.49	0.90	0.84	0.68	0.51	0.92	0.86	0.70	0.52	0.95	0.89	0.72	0.54	0.98	0.92	0.75	0.56	0.99	0.93	0.76	0.57
		ΔT	23	22	19	15	23	22	19	16	23	22	20	16	24	23	20	16	23	22	19	15	22	21	18	14
		kW	2.31	2.36	2.44	2.52	2.50	2.55	2.64	2.72	2.66	2.72	2.81	2.90	2.80	2.86	2.96	3.06	2.92	2.99	3.09	3.19	3.02	3.09	3.20	3.31
		Amps	9.1	9.3	9.6	10.0	9.9	10.1	10.5	10.9	10.7	11.0	11.4	11.8	11.5	11.8	12.2	12.7	12.3	12.6	13.0	13.5	13.0	13.4	13.8	14.4
		Hi PR	147	158	167	174	165	177	187	195	187	202	213	222	213	230	243	253	240	258	273	285	265	285	301	314
		Lo PR	62	65	71	76	65	69	76	80	68	72	78	84	71	76	82	88	74	79	86	92	77	82	89	95
85	1406	MBh	36.1	36.8	38.6	41.1	35.3	36.0	37.7	40.2	34.4	35.1	36.8	39.2	33.6	34.2	35.9	38.3	31.9	32.5	34.1	36.4	29.6	30.1	31.6	33.7
		S/T	0.98	0.95	0.86	0.70	1.00	0.98	0.89	0.72	1.00	1.00	0.91	0.74	1.00	1.00	0.94	0.76	1.00	1.00	0.98	0.79	1.00	1.00	0.98	0.80
		ΔT	23	23	22	19	23	23	22	19	23	23	22	19	22	22	22	19	21	21	22	19	19	20	20	18
		kW	2.41	2.46	2.54	2.63	2.60	2.66	2.75	2.84	2.77	2.83	2.93	3.03	2.92	2.99	3.09	3.19	3.05	3.12	3.22	3.34	3.16	3.23	3.34	3.46
		Amps	9.5	9.8	10.1	10.5	10.3	10.6	11.0	11.4	11.3	11.6	12.0	12.4	12.1	12.4	12.8	13.3	12.9	13.2	13.7	14.2	13.7	14.0	14.5	15.1
		Hi PR	154	166	175	183	173	186	197	205	197	212	224	234	224	242	255	266	252	272	287	299	279	300	317	331
		Lo PR	65	69	75	80	68	73	79	85	71	76	83	88	75	79	87	92	78	83	91	97	81	86	94	100
	1250	MBh	35.1	35.7	37.4	39.9	34.3	34.9	36.6	39.0	33.4	34.1	35.7	38.1	32.6	33.3	34.8	37.2	31.0	31.6	33.1	35.3	28.7	29.3	30.6	32.7
		S/T	0.94	0.91	0.82	0.66	0.97	0.94	0.85	0.69	1.00	0.96	0.87	0.71	1.00	0.99	0.90	0.73	1.00	1.00	0.93	0.76	1.00	1.00	0.94	0.76
		ΔT	24	24	23	19	25	24	23	20	25	24	23	20	24	24	23	20	23	23	23	20	21	22	21	18
		kW	2.39	2.44	2.52	2.61	2.58	2.64	2.73	2.82	2.75	2.81	2.90	3.00	2.90	2.96	3.06	3.17	3.02	3.09	3.20	3.31	3.13	3.20	3.31	3.43
		Amps	9.4	9.7	10.0	10.4	10.2	10.5	10.9	11.3	11.2	11.4	11.8	12.3	12.0	12.3	12.7	13.2	12.8	13.1	13.5	14.1	13.5	13.9	14.4	14.9
		Hi PR	153	165	174	181	172	185	195	203	195	210	222	231	222	239	253	263	250	269	284	296	276	297	314	327
		Lo PR	64	68	74	79	68	72	79	84	70	75	82	87	74	79	86	91	77	82	90	96	80	85	93	99
	1094	MBh	32.4	33.0	34.6	36.9	31.6	32.2	33.8	36.0	30.9	31.5	32.9	35.1	30.1	30.7	32.1	34.3	28.6	29.2	30.5	32.6	26.5	27.0	28.3	30.2
		S/T	0.91	0.87	0.79	0.64	0.94	0.91	0.82	0.66	0.96	0.93	0.84	0.68	0.99	0.96	0.86	0.70	1.00	0.99	0.90	0.73	1.00	1.00	0.91	0.73
		ΔT	25	24	23	20	25	25	23	20	25	25	23	20	25	25	23	20	24	24	23	20	22	23	22	19
		kW	2.33	2.38	2.46	2.54	2.52	2.57	2.66	2.75	2.68	2.74	2.83	2.93	2.82	2.89	2.98	3.09	2.94	3.01	3.11	3.22	3.05	3.12	3.23	3.34
		Amps	9.2	9.4	9.7	10.1	10.0	10.2	10.6	11.0	10.8	11.1	11.5	12.0	11.6	11.9	12.3	12.8	12.4	12.7	13.1	13.7	13.2	13.5	14.0	14.5
		Hi PR	148	160	169	176	166	179	189	197	189	204	215	224	216	232	245	255	242	261	276	287	268	288	304	318
		Lo PR	62	66	72	77	66	70	76	81	68	73	79	84	72	76	83	89	75	80	87	93	78	83	90	96

IDB: Entering Indoor Dry Bulb Temperature
High and low pressures are measured at the liquid and suction service valves.

Shaded area reflects AHRI conditions

kW = Total system power
Amps = outdoor unit amps (comp.+fan)

Expanded Cooling Data — GPH1342H21*

			Outdoor Ambient Temperature																							
			65ºF				75ºF				85ºF				95ºF				105ºF				115ºF			
			Entering Indoor Wet Bulb Temperature																							
IDB	Airflow		59	63	67	71	59	63	67	71	59	63	67	71	59	63	67	71	59	63	67	71	59	63	67	71
70	1631	MBh	40.2	41.6	45.6	-	39.2	40.7	44.6	-	38.3	39.7	43.5	-	37.4	38.74	42.4	-	35.5	36.8	40.3	-	32.9	34.1	37.3	-
		S/T	0.75	0.63	0.44	-	0.78	0.65	0.45	-	0.80	0.67	0.46	-	0.83	0.69	0.48	-	0.86	0.72	0.50	-	0.86	0.72	0.50	-
		ΔT	17	15	11	-	17	15	11	-	17	15	11	-	17	15	11	-	17	15	11	-	16	14	11	-
		kW	2.44	2.50	2.58	-	2.64	2.69	2.78	-	2.81	2.87	2.97	-	2.96	3.03	3.13	-	3.09	3.16	3.27	-	3.20	3.27	3.38	-
		Amps	9.3	9.5	9.8	-	10.0	10.3	10.7	-	11.0	11.2	11.6	-	11.7	12.0	12.4	-	12.5	12.8	13.3	-	13.3	13.6	14.1	-
		Hi PR	144	155	163	-	161	174	183	-	184	198	209	-	209	225	238	-	235	253	267	-	260	280	295	-
		Lo PR	64	68	74	-	67	71	78	-	70	74	81	-	73	78	85	-	77	82	89	-	79	85	92	-
	1450	MBh	39.0	40.4	44.3	-	38.1	39.5	43.3	-	37.2	38.5	42.2	-	36.3	37.6	41.2	-	34.5	35.7	39.1	-	31.9	33.1	36.3	-
		S/T	0.72	0.60	0.42	-	0.74	0.62	0.43	-	0.76	0.64	0.44	-	0.79	0.66	0.46	-	0.82	0.68	0.47	-	0.82	0.69	0.48	-
		ΔT	18	15	12	-	18	16	12	-	18	16	12	-	18	16	12	-	18	15	12	-	17	14	11	-
		kW	2.42	2.47	2.56	-	2.61	2.67	2.76	-	2.78	2.85	2.94	-	2.93	3.00	3.10	-	3.06	3.13	3.24	-	3.17	3.24	3.35	-
		Amps	9.2	9.4	9.7	-	10.0	10.2	10.6	-	10.9	11.1	11.5	-	11.6	11.9	12.3	-	12.4	12.7	13.2	-	13.2	13.5	14.0	-
		Hi PR	142	153	162	-	160	172	182	-	182	196	207	-	207	223	235	-	233	251	265	-	257	277	292	-
		Lo PR	63	67	73	-	66	71	77	-	69	73	80	-	73	77	84	-	76	81	88	-	79	84	91	-
	1269	MBh	36.0	37.3	40.9	-	35.2	36.4	39.9	-	34.3	35.6	39.0	-	33.5	34.7	38.0	-	31.8	33.0	36.1	-	29.5	30.5	33.5	-
		S/T	0.69	0.58	0.40	-	0.72	0.60	0.42	-	0.74	0.61	0.43	-	0.76	0.63	0.44	-	0.79	0.66	0.46	-	0.80	0.66	0.46	-
		ΔT	18	16	12	-	18	16	12	-	18	16	12	-	18	16	12	-	18	16	12	-	17	15	11	-
		kW	2.36	2.41	2.49	-	2.55	2.60	2.69	-	2.71	2.77	2.87	-	2.86	2.92	3.02	-	2.98	3.05	3.15	-	3.09	3.16	3.27	-
		Amps	8.9	9.1	9.5	-	9.7	9.9	10.3	-	10.5	10.8	11.2	-	11.3	11.6	12.0	-	12.0	12.3	12.8	-	12.8	13.1	13.6	-
		Hi PR	138	149	157	-	155	167	176	-	176	190	200	-	201	216	228	-	226	243	257	-	250	269	284	-
		Lo PR	61	65	71	-	64	69	75	-	67	71	78	-	70	75	82	-	74	78	86	-	76	81	89	-
75	1631	MBh	40.9	42.1	45.5	48.9	39.9	41.1	44.5	47.7	39.0	40.1	43.4	46.6	38.0	**39.1**	42.4	45.5	36.1	37.2	40.2	43.2	33.4	34.4	37.3	40.0
		S/T	0.86	0.77	0.58	0.37	0.89	0.79	0.60	0.39	0.91	0.81	0.62	0.40	0.94	**0.84**	0.64	0.41	0.97	0.87	0.66	0.42	0.98	0.88	0.67	0.43
		ΔT	20	18	15	10	20	18	15	10	20	18	15	10	20	**19**	15	10	20	18	15	10	19	17	14	10
		kW	2.46	2.52	2.60	2.68	2.66	2.72	2.81	2.90	2.83	2.90	2.99	3.09	2.98	**3.05**	3.16	3.26	3.11	3.19	3.29	3.41	3.23	3.30	3.41	3.53
		Amps	9.4	9.6	9.9	10.3	10.1	10.4	10.8	11.2	11.1	11.3	11.7	12.2	11.8	**12.1**	12.6	13.1	12.6	13.0	13.4	13.9	13.4	13.8	14.2	14.8
		Hi PR	145	156	165	172	163	175	185	193	185	200	211	220	211	**227**	240	250	238	256	270	282	262	282	298	311
		Lo PR	64	68	75	79	68	72	79	84	70	75	82	87	74	**79**	86	92	78	83	90	96	80	85	93	99
	1450	MBh	39.7	40.8	44.2	47.4	38.7	39.9	43.2	46.3	37.8	38.9	42.2	45.2	36.9	**38.0**	41.1	44.1	35.1	36.1	39.1	41.9	32.5	33.4	36.2	38.8
		S/T	0.82	0.73	0.55	0.36	0.85	0.76	0.57	0.37	0.87	0.78	0.59	0.38	0.90	**0.80**	0.61	0.39	0.93	0.83	0.63	0.40	0.94	0.84	0.63	0.41
		ΔT	21	19	15	11	21	19	16	11	21	19	16	11	21	**19**	16	11	21	19	16	11	19	18	15	10
		kW	2.44	2.50	2.58	2.66	2.64	2.69	2.78	2.88	2.81	2.87	2.97	3.07	2.96	**3.03**	3.13	3.24	3.09	3.16	3.27	3.38	3.20	3.27	3.38	3.50
		Amps	9.3	9.5	9.8	10.2	10.1	10.3	10.7	11.1	11.0	11.2	11.6	12.1	11.7	**12.0**	12.5	12.9	12.5	12.8	13.3	13.8	13.3	13.6	14.1	14.7
		Hi PR	144	155	163	170	161	174	183	191	184	198	209	218	209	**225**	238	248	235	253	267	279	260	280	295	308
		Lo PR	64	68	74	79	67	71	78	83	70	74	81	86	73	**78**	85	91	77	82	89	95	79	85	92	98
	1269	MBh	36.6	37.7	40.8	43.8	35.8	36.8	39.9	42.8	34.9	35.9	38.9	41.8	34.1	**35.1**	38.0	40.7	32.4	33.3	36.1	38.7	30.0	30.9	33.4	35.8
		S/T	0.79	0.70	0.53	0.34	0.82	0.73	0.55	0.36	0.84	0.75	0.57	0.36	0.86	**0.77**	0.58	0.38	0.90	0.80	0.61	0.39	0.90	0.81	0.61	0.39
		ΔT	21	19	16	11	21	19	16	11	21	19	16	11	21	**20**	16	11	21	19	16	11	20	18	15	10
		kW	2.38	2.43	2.51	2.60	2.57	2.63	2.71	2.80	2.74	2.80	2.89	2.99	2.88	**2.95**	3.05	3.15	3.01	3.08	3.18	3.29	3.12	3.19	3.30	3.41
		Amps	9.0	9.2	9.5	9.9	9.8	10.0	10.4	10.8	10.6	10.9	11.3	11.7	11.4	**11.7**	12.1	12.6	12.2	12.5	12.9	13.4	12.9	13.2	13.7	14.2
		Hi PR	140	150	159	165	157	168	178	186	178	192	202	211	203	**218**	230	240	228	246	259	270	252	271	286	299
		Lo PR	62	66	72	76	65	69	76	81	68	72	79	84	71	**76**	83	88	75	79	87	92	77	82	90	95

IDB: Entering Indoor Dry Bulb Temperature
High and low pressures are measured at the liquid and suction service valves.

Shaded area reflects ACCA (TVA) conditions

kW = Total system power
Amps = outdoor unit amps (comp.+fan)

Expanded Cooling Data — GPH1342H21* (cont.)

			Outdoor Ambient Temperature																							
			65ºF				75ºF				85ºF				95ºF				105ºF				115ºF			
			Entering Indoor Wet Bulb Temperature																							
IDB	Airflow		59	63	67	71	59	63	67	71	59	63	67	71	59	63	67	71	59	63	67	71	59	63	67	71
80	1631	MBh	41.6	42.5	45.4	48.5	40.6	41.5	44.3	47.4	39.6	40.5	43.3	46.3	38.7	39.5	42.2	45.1	36.7	37.6	40.1	42.9	34.0	34.8	37.2	39.7
		S/T	0.94	0.88	0.72	0.54	1.00	0.91	0.74	0.56	1.00	0.94	0.76	0.57	1.00	0.97	0.79	0.59	1.00	1.00	0.82	0.61	1.00	1.00	0.82	0.62
		ΔT	22	21	18	15	23	21	19	15	22	21	19	15	22	22	19	15	21	21	18	15	19	20	17	14
		kW	2.48	2.54	2.62	2.71	2.68	2.74	2.83	2.93	2.86	2.92	3.02	3.12	3.01	3.08	3.18	3.29	3.14	3.21	3.32	3.44	3.25	3.33	3.44	3.56
		Amps	9.4	9.7	10.0	10.4	10.2	10.5	10.9	11.3	11.2	11.4	11.8	12.3	12.0	12.3	12.7	13.2	12.8	13.1	13.5	14.1	13.5	13.9	14.4	14.9
		Hi PR	147	158	167	174	165	177	187	195	187	202	213	222	213	230	242	253	240	258	273	284	265	285	301	314
		Lo PR	65	69	75	80	69	73	80	85	71	76	83	88	75	80	87	93	78	83	91	97	81	86	94	100
	1450	MBh	40.4	41.3	44.1	47.1	39.4	40.3	43.1	46.0	38.5	39.3	42.0	44.9	37.6	38.4	**41.0**	43.8	35.7	36.5	39.0	41.6	33.0	33.8	36.1	38.6
		S/T	0.90	0.84	0.68	0.51	0.93	0.87	0.71	0.53	0.95	0.89	0.73	0.54	0.98	0.92	**0.75**	0.56	1.00	0.96	0.78	0.58	1.00	0.96	0.78	0.59
		ΔT	23	22	19	15	23	22	19	15	23	22	19	15	23	22	**19**	16	23	22	19	15	21	21	18	14
		kW	2.46	2.52	2.60	2.68	2.66	2.72	2.81	2.90	2.83	2.90	2.99	3.10	2.98	3.05	**3.16**	3.26	3.11	3.19	3.29	3.41	3.23	3.30	3.41	3.53
		Amps	9.4	9.6	9.9	10.3	10.1	10.4	10.8	11.2	11.1	11.3	11.7	12.2	11.9	12.2	**12.6**	13.1	12.6	13.0	13.4	13.9	13.4	13.8	14.2	14.8
		Hi PR	145	156	165	172	163	175	185	193	185	200	211	220	211	227	**240**	250	238	256	270	282	263	283	298	311
		Lo PR	64	68	75	79	68	72	79	84	70	75	82	87	74	79	**86**	92	78	83	90	96	80	85	93	99
	1269	MBh	37.3	38.1	40.7	43.5	36.4	37.2	39.7	42.5	35.5	36.3	38.8	41.5	34.7	35.4	37.8	40.5	32.9	33.6	36.0	38.4	30.5	31.2	33.3	35.6
		S/T	0.86	0.81	0.66	0.49	0.90	0.84	0.68	0.51	0.92	0.86	0.70	0.52	0.95	0.89	0.72	0.54	0.98	0.92	0.75	0.56	0.99	0.93	0.76	0.57
		ΔT	23	22	19	16	24	23	20	16	24	23	20	16	24	23	20	16	23	22	20	16	22	21	18	15
		kW	2.40	2.45	2.53	2.62	2.59	2.65	2.74	2.83	2.76	2.82	2.92	3.02	2.91	2.97	3.07	3.18	3.03	3.10	3.21	3.32	3.14	3.22	3.33	3.44
		Amps	9.1	9.3	9.6	10.0	9.9	10.1	10.5	10.9	10.7	11.0	11.4	11.8	11.5	11.8	12.2	12.7	12.3	12.6	13.0	13.5	13.0	13.4	13.8	14.4
		Hi PR	141	152	160	167	158	170	180	187	180	194	204	213	205	220	233	243	230	248	262	273	255	274	289	302
		Lo PR	62	66	72	77	66	70	76	81	68	73	79	85	72	76	83	89	75	80	87	93	78	83	90	96
85	1631	MBh	42.3	43.1	45.2	48.2	41.3	42.1	44.1	47.1	40.3	41.1	43.1	45.9	39.4	40.1	42.0	44.8	37.4	38.1	39.9	42.6	34.6	35.3	37.0	39.4
		S/T	0.98	0.95	0.86	0.70	1.00	0.98	0.89	0.72	1.00	1.00	0.91	0.74	1.00	1.00	0.94	0.76	1.00	1.00	0.98	0.79	1.00	1.00	0.98	0.80
		ΔT	23	23	22	19	23	23	22	19	23	23	22	19	22	23	22	19	21	21	22	19	20	20	21	18
		kW	2.50	2.56	2.64	2.73	2.70	2.76	2.86	2.95	2.88	2.95	3.04	3.15	3.04	3.11	3.21	3.32	3.17	3.24	3.35	3.47	3.28	3.36	3.47	3.60
		Amps	9.5	9.8	10.1	10.5	10.3	10.6	11.0	11.4	11.3	11.6	12.0	12.4	12.1	12.4	12.8	13.3	12.9	13.2	13.7	14.2	13.7	14.0	14.5	15.1
		Hi PR	148	160	168	176	166	179	189	197	189	204	215	224	215	232	245	255	242	261	275	287	268	288	304	317
		Lo PR	65	70	76	81	69	74	80	86	72	77	84	89	76	80	88	93	79	84	92	98	82	87	95	101
	1450	MBh	41.1	41.9	43.9	46.8	40.1	40.9	42.8	45.7	39.2	39.9	41.8	44.6	38.2	39.0	40.8	43.5	36.3	37.0	38.8	41.3	33.6	34.3	35.9	38.3
		S/T	0.94	0.91	0.82	0.66	0.97	0.94	0.85	0.69	1.00	0.96	0.87	0.71	1.00	0.99	0.90	0.73	1.00	1.00	0.93	0.76	1.00	1.00	0.94	0.76
		ΔT	24	24	23	20	25	24	23	20	25	24	23	20	24	25	23	20	23	23	23	20	21	22	21	18
		kW	2.48	2.54	2.62	2.71	2.68	2.74	2.83	2.93	2.86	2.92	3.02	3.12	3.01	3.08	3.18	3.29	3.14	3.21	3.32	3.44	3.25	3.33	3.44	3.56
		Amps	9.4	9.7	10.0	10.4	10.2	10.5	10.9	11.3	11.2	11.4	11.8	12.3	12.0	12.3	12.7	13.2	12.8	13.1	13.5	14.1	13.5	13.9	14.4	14.9
		Hi PR	147	158	167	174	165	177	187	195	187	202	213	222	213	230	242	253	240	258	273	284	265	285	301	314
		Lo PR	65	69	75	80	69	73	80	85	71	76	83	88	75	80	87	93	78	83	91	97	81	86	94	100
	1269	MBh	37.9	38.6	40.5	43.2	37.0	37.7	39.5	42.2	36.2	36.9	38.6	41.2	35.3	36.0	37.7	40.2	33.5	34.2	35.8	38.2	31.0	31.6	33.1	35.4
		S/T	0.91	0.87	0.79	0.64	0.94	0.91	0.82	0.66	0.96	0.93	0.84	0.68	0.99	0.96	0.86	0.70	1.00	0.99	0.90	0.73	1.00	1.00	0.91	0.73
		ΔT	25	24	23	20	25	25	23	20	25	25	23	20	25	25	24	20	24	25	23	20	22	23	22	19
		kW	2.42	2.47	2.55	2.64	2.61	2.67	2.76	2.85	2.78	2.85	2.94	3.04	2.93	3.00	3.10	3.21	3.06	3.13	3.24	3.35	3.17	3.24	3.35	3.47
		Amps	9.2	9.4	9.7	10.1	10.0	10.2	10.6	11.0	10.8	11.1	11.5	12.0	11.6	11.9	12.3	12.8	12.4	12.7	13.1	13.7	13.2	13.5	14.0	14.5
		Hi PR	142	153	162	169	160	172	182	189	182	196	206	215	207	223	235	245	233	250	265	276	257	277	292	305
		Lo PR	63	67	73	78	66	71	77	82	69	73	80	85	73	77	84	90	76	81	88	94	79	84	91	97

IDB: Entering Indoor Dry Bulb Temperature
High and low pressures are measured at the liquid and suction service valves.

Shaded area reflects AHRI conditions

kW = Total system power
Amps = outdoor unit amps (comp.+fan)

Expanded Cooling Data — GPH1348H21*

			Outdoor Ambient Temperature																							
			65ºF				75ºF				85ºF				95ºF				105ºF				115ºF			
			Entering Indoor Wet Bulb Temperature																							
IDB	Airflow		59	63	67	71	59	63	67	71	59	63	67	71	59	63	67	71	59	63	67	71	59	63	67	71
70	1856	MBh	45.5	47.1	51.6	-	44.4	46.0	50.4	-	43.4	44.9	49.2	-	42.3	43.8	48.0	-	40.2	41.6	45.6	-	37.2	38.6	42.3	-
		S/T	0.75	0.63	0.44	-	0.78	0.65	0.45	-	0.80	0.67	0.46	-	0.83	0.69	0.48	-	0.86	0.72	0.50	-	0.86	0.72	0.50	-
		ΔT	17	15	11	-	17	15	11	-	17	15	11	-	17	15	11	-	17	15	11	-	16	14	10	-
		kW	2.80	2.86	2.95	-	3.02	3.09	3.20	-	3.23	3.30	3.41	-	3.40	3.48	3.60	-	3.56	3.64	3.76	-	3.69	3.77	3.90	-
		Amps	10.7	11.0	11.4	-	11.6	11.9	12.3	-	12.7	13.0	13.5	-	13.6	13.9	14.4	-	14.5	14.9	15.4	-	15.4	15.8	16.4	-
		Hi PR	147	158	167	-	165	177	187	-	187	202	213	-	213	230	243	-	240	258	273	-	265	285	301	-
		Lo PR	64	68	74	-	67	71	78	-	70	74	81	-	73	78	85	-	77	82	89	-	79	85	92	-
	1650	MBh	44.1	45.8	50.1	-	43.1	44.7	49.0	-	42.1	43.6	47.8	-	41.1	42.6	46.6	-	39.0	40.4	44.3	-	36.1	37.5	41.0	-
		S/T	0.72	0.60	0.42	-	0.74	0.62	0.43	-	0.76	0.64	0.44	-	0.79	0.66	0.46	-	0.82	0.68	0.47	-	0.82	0.69	0.48	-
		ΔT	18	15	12	-	18	15	12	-	18	15	12	-	18	16	12	-	18	15	12	-	17	14	11	-
		kW	2.77	2.83	2.93	-	3.00	3.07	3.17	-	3.20	3.27	3.38	-	3.37	3.45	3.57	-	3.52	3.61	3.73	-	3.65	3.74	3.87	-
		Amps	10.6	10.9	11.3	-	11.5	11.8	12.2	-	12.6	12.9	13.3	-	13.5	13.8	14.3	-	14.4	14.7	15.3	-	15.3	15.7	16.2	-
		Hi PR	145	156	165	-	163	176	185	-	186	200	211	-	211	227	240	-	238	256	270	-	263	283	298	-
		Lo PR	63	67	73	-	66	71	77	-	69	73	80	-	73	77	84	-	76	81	88	-	79	84	91	-
	1444	MBh	40.7	42.2	46.3	-	39.8	41.2	45.2	-	38.8	40.3	44.1	-	37.9	39.3	43.0	-	36.0	37.3	40.9	-	33.4	34.6	37.9	-
		S/T	0.69	0.58	0.40	-	0.72	0.60	0.42	-	0.74	0.61	0.43	-	0.76	0.63	0.44	-	0.79	0.66	0.46	-	0.80	0.66	0.46	-
		ΔT	18	16	12	-	18	16	12	-	18	16	12	-	18	16	12	-	18	16	12	-	17	15	11	-
		kW	2.70	2.76	2.85	-	2.92	2.99	3.09	-	3.12	3.19	3.30	-	3.29	3.36	3.48	-	3.43	3.51	3.63	-	3.56	3.64	3.77	-
		Amps	10.3	10.6	10.9	-	11.2	11.5	11.9	-	12.2	12.5	12.9	-	13.1	13.4	13.9	-	14.0	14.3	14.8	-	14.8	15.2	15.7	-
		Hi PR	141	152	160	-	158	170	180	-	180	194	204	-	205	221	233	-	231	248	262	-	255	274	289	-
		Lo PR	61	65	71	-	64	69	75	-	67	71	78	-	70	75	82	-	74	78	86	-	76	81	89	-
75	1856	MBh	46.2	47.6	51.5	55.3	45.2	46.5	50.3	54.0	44.1	45.4	49.1	52.7	43.0	**44.3**	47.9	51.4	40.9	42.1	45.5	48.9	37.9	39.0	42.2	45.3
		S/T	0.86	0.77	0.58	0.37	0.89	0.79	0.60	0.39	0.91	0.81	0.62	0.40	0.94	**0.84**	0.64	0.41	0.97	0.87	0.66	0.42	0.98	0.88	0.67	0.43
		ΔT	20	18	15	10	20	18	15	10	20	18	15	10	20	**18**	15	10	20	18	15	10	18	17	14	10
		kW	2.82	2.88	2.98	3.08	3.05	3.12	3.23	3.34	3.25	3.33	3.44	3.56	3.43	**3.51**	3.64	3.76	3.59	3.67	3.80	3.93	3.72	3.81	3.94	4.08
		Amps	10.8	11.1	11.5	11.9	11.7	12.0	12.5	12.9	12.8	13.1	13.6	14.1	13.7	**14.1**	14.6	15.1	14.6	15.0	15.5	16.2	15.6	16.0	16.5	17.2
		Hi PR	148	160	169	176	166	179	189	197	189	204	215	224	216	**232**	245	256	243	261	276	287	268	288	305	318
		Lo PR	64	68	75	79	68	72	79	84	70	75	82	87	74	**79**	86	92	78	83	90	96	80	85	93	99
	1650	MBh	44.9	46.2	50.0	53.7	43.8	45.1	48.9	52.4	42.8	44.1	47.7	51.2	41.8	**43.0**	46.5	49.9	39.7	40.8	44.2	47.5	36.7	37.8	41.0	44.0
		S/T	0.82	0.73	0.55	0.36	0.85	0.76	0.57	0.37	0.87	0.78	0.59	0.38	0.90	**0.80**	0.61	0.39	0.93	0.83	0.63	0.40	0.94	0.84	0.63	0.41
		ΔT	20	19	15	11	21	19	16	11	21	19	16	11	21	**19**	16	11	21	19	16	11	19	18	14	10
		kW	2.80	2.86	2.95	3.06	3.02	3.09	3.20	3.31	3.23	3.30	3.41	3.53	3.40	**3.48**	3.60	3.73	3.56	3.64	3.77	3.90	3.69	3.77	3.90	4.04
		Amps	10.7	11.0	11.4	11.8	11.6	11.9	12.3	12.8	12.7	13.0	13.5	14.0	13.6	**13.9**	14.4	15.0	14.5	14.9	15.4	16.0	15.4	15.8	16.4	17.0
		Hi PR	147	158	167	174	165	177	187	195	187	202	213	222	213	**230**	243	253	240	258	273	285	265	286	301	314
		Lo PR	64	68	74	79	67	71	78	83	70	74	81	86	73	**78**	85	91	77	82	89	95	79	85	92	98
	1444	MBh	41.4	42.7	46.2	49.6	40.5	41.7	45.1	48.4	39.5	40.7	44.0	47.3	38.5	**39.7**	43.0	46.1	36.6	37.7	40.8	43.8	33.9	34.9	37.8	40.6
		S/T	0.79	0.70	0.53	0.34	0.82	0.73	0.55	0.36	0.84	0.75	0.57	0.36	0.86	**0.77**	0.58	0.38	0.90	0.80	0.61	0.39	0.90	0.81	0.61	0.39
		ΔT	21	19	16	11	21	19	16	11	21	19	16	11	21	**20**	16	11	21	19	16	11	20	18	15	10
		kW	2.73	2.79	2.88	2.98	2.95	3.01	3.12	3.22	3.14	3.21	3.32	3.44	3.32	**3.39**	3.51	3.63	3.46	3.54	3.67	3.79	3.59	3.67	3.80	3.94
		Amps	10.4	10.7	11.0	11.5	11.3	11.6	12.0	12.5	12.3	12.6	13.1	13.6	13.2	**13.5**	14.0	14.6	14.1	14.5	15.0	15.5	15.0	15.3	15.9	16.5
		Hi PR	142	153	162	169	160	172	182	189	182	196	207	215	207	**223**	235	245	233	251	265	276	257	277	292	305
		Lo PR	62	66	72	76	65	69	76	81	68	72	79	84	71	**76**	83	88	75	79	87	92	77	82	90	95

IDB: Entering Indoor Dry Bulb Temperature
High and low pressures are measured at the liquid and suction service valves.

Shaded area reflects ACCA (TVA) conditions

kW = Total system power
Amps = outdoor unit amps (comp.+fan)

Expanded Cooling Data — GPH1348H21* (cont.)

			Outdoor Ambient Temperature																							
			65ºF				75ºF				85ºF				95ºF				105ºF				115ºF			
			Entering Indoor Wet Bulb Temperature																							
IDB	Airflow		59	63	67	71	59	63	67	71	59	63	67	71	59	63	67	71	59	63	67	71	59	63	67	71
80	1856	MBh	47.1	48.1	51.4	54.9	46.0	47.0	50.2	53.6	44.9	45.9	49.0	52.4	43.8	44.7	47.8	51.1	41.6	42.5	45.4	48.5	38.5	39.4	42.1	45.0
		S/T	0.94	0.88	0.72	0.54	1.00	0.91	0.74	0.56	1.00	0.94	0.76	0.57	1.00	0.97	0.79	0.59	1.00	1.00	0.82	0.61	1.00	1.00	0.82	0.62
		ΔT	22	21	18	15	23	21	18	15	22	21	18	15	22	21	19	15	21	21	18	15	19	19	17	14
		kW	2.84	2.91	3.01	3.11	3.08	3.15	3.25	3.37	3.28	3.36	3.47	3.60	3.46	3.55	3.67	3.80	3.62	3.70	3.83	3.97	3.75	3.84	3.98	4.12
		Amps	10.9	11.2	11.6	12.0	11.9	12.2	12.6	13.1	12.9	13.3	13.7	14.3	13.9	14.2	14.7	15.3	14.8	15.2	15.7	16.3	15.7	16.1	16.7	17.3
		Hi PR	150	161	170	178	168	181	191	199	191	206	217	227	218	234	247	258	245	264	278	290	271	291	308	321
		Lo PR	65	69	75	80	69	73	80	85	71	76	83	88	75	80	87	93	78	83	91	97	81	86	94	100
	1650	MBh	45.7	46.7	49.9	53.3	44.6	45.6	48.7	52.1	43.6	44.5	47.6	50.8	42.5	43.4	##	49.6	40.4	41.3	44.1	47.1	37.4	38.2	40.8	43.6
		S/T	0.90	0.84	0.68	0.51	0.93	0.87	0.71	0.53	0.95	0.89	0.73	0.54	0.98	0.92	**0.75**	0.56	1.00	0.96	0.78	0.58	1.00	0.96	0.78	0.59
		ΔT	23	22	19	15	23	22	19	15	23	22	19	15	23	22	**19**	15	22	22	19	15	21	21	18	14
		kW	2.82	2.88	2.98	3.08	3.05	3.12	3.23	3.34	3.25	3.33	3.44	3.56	3.43	3.51	##	3.76	3.59	3.67	3.80	3.93	3.72	3.81	3.94	4.08
		Amps	10.8	11.1	11.5	11.9	11.7	12.0	12.5	12.9	12.8	13.1	13.6	14.1	13.7	14.1	**14.6**	15.1	14.7	15.0	15.6	16.2	15.6	16.0	16.5	17.2
		Hi PR	148	160	169	176	166	179	189	197	189	204	215	224	216	232	**245**	256	243	261	276	287	268	288	305	318
		Lo PR	64	68	75	79	68	72	79	84	70	75	82	87	74	79	**86**	92	78	83	90	96	80	85	93	99
	1444	MBh	42.2	43.1	46.0	49.2	41.2	42.1	45.0	48.1	40.2	41.1	43.9	46.9	39.2	40.1	42.8	45.8	37.3	38.1	40.7	43.5	34.5	35.3	37.7	40.3
		S/T	0.86	0.81	0.66	0.49	0.90	0.84	0.68	0.51	0.92	0.86	0.70	0.52	0.95	0.89	0.72	0.54	0.98	0.92	0.75	0.56	0.99	0.93	0.76	0.57
		ΔT	23	22	19	15	23	22	20	16	24	23	20	16	24	23	20	16	23	22	19	16	22	21	18	15
		kW	2.75	2.81	2.90	3.00	2.97	3.04	3.14	3.25	3.17	3.24	3.35	3.47	3.34	3.42	3.54	3.66	3.49	3.57	3.70	3.83	3.62	3.71	3.83	3.97
		Amps	10.5	10.8	11.1	11.6	11.4	11.7	12.1	12.6	12.4	12.8	13.2	13.7	13.3	13.7	14.2	14.7	14.2	14.6	15.1	15.7	15.1	15.5	16.0	16.7
		Hi PR	144	155	164	171	161	174	183	191	184	198	209	218	209	225	238	248	235	253	267	279	260	280	295	308
		Lo PR	62	66	72	77	66	70	76	81	68	73	79	85	72	76	83	89	75	80	87	93	78	83	90	96
85	1856	MBh	47.9	48.8	51.1	54.5	46.8	47.7	49.9	53.3	45.7	46.5	48.7	52.0	44.5	45.4	47.6	50.7	42.3	43.1	45.2	48.2	39.2	40.0	41.8	44.6
		S/T	0.98	0.95	0.86	0.70	1.00	0.98	0.89	0.72	1.00	1.00	0.91	0.74	1.00	1.00	0.94	0.76	1.00	1.00	0.98	0.79	1.00	1.00	0.98	0.80
		ΔT	23	23	22	19	23	23	22	19	23	23	22	19	22	22	22	19	21	21	22	19	19	20	20	18
		kW	2.87	2.93	3.03	3.13	3.10	3.17	3.28	3.40	3.31	3.39	3.50	3.63	3.49	3.58	3.70	3.83	3.65	3.74	3.87	4.00	3.79	3.87	4.01	4.15
		Amps	11.0	11.3	11.7	12.2	12.0	12.3	12.7	13.2	13.1	13.4	13.9	14.4	14.0	14.4	14.9	15.4	14.9	15.3	15.9	16.5	15.9	16.3	16.8	17.5
		Hi PR	151	163	172	179	170	183	193	201	193	208	219	229	220	237	250	261	247	266	281	293	273	294	311	324
		Lo PR	65	70	76	81	69	74	80	86	72	77	84	89	76	80	88	93	79	84	92	98	82	87	95	101
	1650	MBh	46.5	47.4	49.6	52.9	45.4	46.3	48.5	51.7	44.3	45.2	47.3	50.5	43.2	44.1	46.2	49.3	41.1	41.9	43.9	46.8	38.1	38.8	40.6	43.3
		S/T	0.94	0.91	0.82	0.66	0.97	0.94	0.85	0.69	1.00	0.96	0.87	0.71	1.00	0.99	0.90	0.73	1.00	1.00	0.93	0.76	1.00	1.00	0.94	0.76
		ΔT	24	24	23	20	25	24	23	20	25	24	23	20	24	24	23	20	23	23	23	20	21	22	21	18
		kW	2.84	2.91	3.01	3.11	3.08	3.15	3.25	3.37	3.28	3.36	3.47	3.60	3.46	3.55	3.67	3.80	3.62	3.70	3.83	3.97	3.75	3.84	3.98	4.12
		Amps	10.9	11.2	11.6	12.0	11.9	12.2	12.6	13.1	12.9	13.3	13.7	14.3	13.9	14.2	14.7	15.3	14.8	15.2	15.7	16.3	15.7	16.1	16.7	17.3
		Hi PR	150	161	170	178	168	181	191	199	191	206	217	227	218	234	247	258	245	264	278	290	271	291	308	321
		Lo PR	65	69	75	80	69	73	80	85	71	76	83	88	75	80	87	93	78	83	91	97	81	86	94	100
	1444	MBh	42.9	43.7	45.8	48.9	41.9	42.7	44.7	47.7	40.9	41.7	43.7	46.6	39.9	40.7	42.6	45.5	37.9	38.7	40.5	43.2	35.1	35.8	37.5	40.0
		S/T	0.91	0.87	0.79	0.64	0.94	0.91	0.82	0.66	0.96	0.93	0.84	0.68	0.99	0.96	0.86	0.70	1.00	0.99	0.90	0.73	1.00	1.00	0.91	0.73
		ΔT	25	24	23	20	25	25	23	20	25	25	23	20	25	25	23	20	24	24	23	20	22	23	22	19
		kW	2.77	2.83	2.93	3.03	3.00	3.07	3.17	3.28	3.20	3.27	3.38	3.50	3.37	3.45	3.57	3.70	3.52	3.61	3.73	3.86	3.65	3.74	3.87	4.01
		Amps	10.6	10.9	11.3	11.7	11.5	11.8	12.2	12.7	12.6	12.9	13.3	13.8	13.5	13.8	14.3	14.8	14.4	14.7	15.2	15.8	15.3	15.6	16.2	16.8
		Hi PR	145	156	165	172	163	175	185	193	185	200	211	220	211	227	240	250	238	256	270	282	263	283	298	311
		Lo PR	63	67	73	78	66	71	77	82	69	73	80	85	73	77	84	90	76	81	88	94	79	84	91	97

IDB: Entering Indoor Dry Bulb Temperature
High and low pressures are measured at the liquid and suction service valves.

Shaded area reflects AHRI conditions

kW = Total system power
Amps = outdoor unit amps (comp.+fan)

Expanded Cooling Data — GPH1360H21*

			Outdoor Ambient Temperature																							
			65ºF				75ºF				85ºF				95ºF				105ºF				115ºF			
			Entering Indoor Wet Bulb Temperature																							
IDB	Airflow		59	63	67	71	59	63	67	71	59	63	67	71	59	63	67	71	59	63	67	71	59	63	67	71
70	2138	MBh	56.4	58.5	64.1	-	55.1	57.1	62.6	-	53.8	55.8	61.1	-	52.5	54.4	59.6	-	49.9	51.7	56.6	-	46.2	47.9	52.5	-
		S/T	0.75	0.63	0.44	-	0.78	0.65	0.45	-	0.80	0.67	0.46	-	0.83	0.69	0.48	-	0.86	0.72	0.50	-	0.86	0.72	0.50	-
		ΔT	18	16	12	-	19	16	12	-	19	16	12	-	19	16	12	-	18	16	12	-	17	15	11	-
		kW	3.65	3.74	3.87	-	3.96	4.06	4.20	-	4.24	4.34	4.49	-	4.48	4.59	4.75	-	4.69	4.80	4.97	-	4.86	4.98	5.16	-
		Amps	14.1	14.5	15.0	-	15.3	15.7	16.3	-	16.8	17.2	17.8	-	18.0	18.4	19.1	-	19.2	19.7	20.4	-	20.4	20.9	21.7	-
		Hi PR	159	171	180	-	178	192	202	-	203	218	230	-	231	248	262	-	260	279	295	-	287	309	326	-
		Lo PR	61	65	71	-	65	69	75	-	67	72	78	-	71	75	82	-	74	79	86	-	77	82	89	-
	1900	MBh	54.8	56.8	62.2	-	53.5	55.5	60.8	-	52.3	54.2	59.3	-	51.0	52.8	57.9	-	48.4	50.2	55.0	-	44.9	46.5	50.9	-
		S/T	0.72	0.60	0.42	-	0.74	0.62	0.43	-	0.76	0.64	0.44	-	0.79	0.66	0.46	-	0.82	0.68	0.47	-	0.82	0.69	0.48	-
		ΔT	19	16	13	-	19	17	13	-	19	17	13	-	19	17	13	-	19	17	13	-	18	15	12	-
		kW	3.62	3.70	3.83	-	3.93	4.02	4.16	-	4.20	4.30	4.45	-	4.44	4.55	4.71	-	4.64	4.76	4.93	-	4.82	4.94	5.11	-
		Amps	14.0	14.3	14.8	-	15.2	15.6	16.1	-	16.6	17.0	17.6	-	17.8	18.3	18.9	-	19.0	19.5	20.2	-	20.2	20.7	21.4	-
		Hi PR	157	169	179	-	176	190	200	-	201	216	228	-	229	246	260	-	257	277	292	-	284	306	323	-
		Lo PR	61	65	71	-	64	68	75	-	67	71	77	-	70	75	81	-	73	78	85	-	76	81	88	-
	1663	MBh	50.6	52.4	57.4	-	49.4	51.2	56.1	-	48.2	50.0	54.8	-	47.1	48.8	53.4	-	44.7	46.3	50.8	-	41.4	42.9	47.0	-
		S/T	0.69	0.58	0.40	-	0.72	0.60	0.42	-	0.74	0.61	0.43	-	0.76	0.63	0.44	-	0.79	0.66	0.46	-	0.80	0.66	0.46	-
		ΔT	19	17	13	-	20	17	13	-	20	17	13	-	20	17	13	-	19	17	13	-	18	16	12	-
		kW	3.52	3.61	3.73	-	3.82	3.91	4.05	-	4.09	4.18	4.33	-	4.32	4.42	4.58	-	4.52	4.63	4.79	-	4.69	4.80	4.97	-
		Amps	13.6	13.9	14.4	-	14.8	15.1	15.7	-	16.1	16.5	17.1	-	17.3	17.7	18.3	-	18.4	18.9	19.6	-	19.6	20.1	20.8	-
		Hi PR	153	164	173	-	171	184	194	-	195	209	221	-	222	239	252	-	249	268	283	-	276	297	313	-
		Lo PR	59	63	68	-	62	66	72	-	65	69	75	-	68	72	79	-	71	76	83	-	74	78	86	-
75	2138	MBh	57.4	59.1	64.0	68.7	56.1	57.7	62.5	67.1	54.7	56.4	61.0	65.5	53.4	**55.0**	59.5	63.9	50.7	52.2	56.5	60.7	47.0	48.4	52.4	56.2
		S/T	0.86	0.77	0.58	0.37	0.89	0.79	0.60	0.39	0.91	0.81	0.62	0.40	0.94	**0.84**	0.64	0.41	0.97	0.87	0.66	0.42	0.98	0.88	0.67	0.43
		ΔT	21	19	16	11	21	20	16	11	21	20	16	11	22	**20**	16	11	21	20	16	11	20	18	15	10
		kW	3.68	3.77	3.90	4.04	4.00	4.09	4.24	4.39	4.28	4.38	4.53	4.70	4.52	**4.63**	4.80	4.97	4.73	4.84	5.02	5.20	4.91	5.03	5.21	5.40
		Amps	14.3	14.6	15.1	15.7	15.5	15.9	16.4	17.1	16.9	17.4	18.0	18.7	18.1	**18.6**	19.3	20.0	19.4	19.9	20.6	21.4	20.6	21.1	21.9	22.7
		Hi PR	160	173	182	190	180	194	205	213	205	220	233	243	233	**251**	265	276	262	282	298	311	290	312	329	344
		Lo PR	62	66	72	77	65	70	76	81	68	72	79	84	71	**76**	83	88	75	80	87	93	77	82	90	96
	1900	MBh	55.7	57.4	62.1	66.7	54.4	56.0	60.7	65.1	53.1	54.7	59.2	63.6	51.8	**53.4**	57.8	62.0	49.2	50.7	54.9	58.9	45.6	47.0	50.8	54.6
		S/T	0.82	0.73	0.55	0.36	0.85	0.76	0.57	0.37	0.87	0.78	0.59	0.38	0.90	**0.80**	0.61	0.39	0.93	0.83	0.63	0.40	0.94	0.84	0.63	0.41
		ΔT	22	20	17	11	22	21	17	12	22	21	17	12	22	**21**	17	12	22	20	17	12	21	19	16	11
		kW	3.65	3.74	3.87	4.00	3.96	4.06	4.20	4.35	4.24	4.34	4.49	4.66	4.48	**4.59**	4.75	4.93	4.69	4.80	4.97	5.15	4.86	4.98	5.16	5.35
		Amps	14.1	14.5	15.0	15.6	15.3	15.7	16.3	16.9	16.8	17.2	17.8	18.5	18.0	**18.4**	19.1	19.8	19.2	19.7	20.4	21.2	20.4	20.9	21.7	22.5
		Hi PR	159	171	180	188	178	192	203	211	203	218	230	240	231	**248**	262	274	260	280	295	308	287	309	326	340
		Lo PR	61	65	71	76	65	69	75	80	67	72	78	83	71	**75**	82	88	74	79	86	92	77	82	89	95
	1663	MBh	51.4	53.0	57.3	61.5	50.2	51.7	56.0	60.1	49.0	50.5	54.7	58.7	47.8	**49.3**	53.3	57.2	45.5	46.8	50.7	54.4	42.1	43.4	46.9	50.4
		S/T	0.79	0.70	0.53	0.34	0.82	0.73	0.55	0.36	0.84	0.75	0.57	0.36	0.86	**0.77**	0.58	0.38	0.90	0.80	0.61	0.39	0.90	0.81	0.61	0.39
		ΔT	22	21	17	12	23	21	17	12	23	21	17	12	23	**21**	17	12	23	21	17	12	21	19	16	11
		kW	3.55	3.64	3.76	3.90	3.86	3.95	4.09	4.23	4.12	4.22	4.37	4.53	4.36	**4.46**	4.62	4.79	4.56	4.67	4.84	5.01	4.73	4.85	5.02	5.20
		Amps	13.7	14.1	14.6	15.1	14.9	15.3	15.8	16.4	16.3	16.7	17.3	18.0	17.5	**17.9**	18.5	19.3	18.6	19.1	19.8	20.6	19.8	20.3	21.0	21.9
		Hi PR	154	166	175	183	173	186	196	205	197	212	223	233	224	**241**	254	265	252	271	286	299	278	300	316	330
		Lo PR	59	63	69	74	63	67	73	78	65	70	76	81	69	**73**	80	85	72	77	84	89	74	79	86	92

IDB: Entering Indoor Dry Bulb Temperature

Shaded area reflects ACCA (TVA) conditions

kW = Total system power

High and low pressures are measured at the liquid and suction service valves.

Amps = outdoor unit amps (comp.+fan)

Expanded Cooling Data — GPH1360H21* (cont.)

			Outdoor Ambient Temperature																							
			65ºF				75ºF				85ºF				95ºF				105ºF				115ºF			
			Entering Indoor Wet Bulb Temperature																							
IDB	Airflow		59	63	67	71	59	63	67	71	59	63	67	71	59	63	67	71	59	63	67	71	59	63	67	71
80	2138	MBh	58.4	59.7	63.8	68.2	57.1	58.3	62.3	66.6	55.7	56.9	60.8	65.0	54.3	55.5	59.3	63.4	51.6	52.8	56.4	60.3	47.8	48.9	52.2	55.8
		S/T	0.94	0.88	0.72	0.54	1.00	0.91	0.74	0.56	1.00	0.94	0.76	0.57	1.00	0.97	0.79	0.59	1.00	1.00	0.82	0.61	1.00	1.00	0.82	0.62
		ΔT	24	23	20	16	25	23	20	16	24	23	20	16	23	23	20	16	22	23	20	16	21	21	18	15
		kW	3.72	3.80	3.94	4.08	4.03	4.13	4.28	4.43	4.31	4.42	4.58	4.74	4.56	4.67	4.84	5.02	4.77	4.89	5.06	5.25	4.95	5.07	5.26	5.45
		Amps	14.4	14.8	15.3	15.9	15.6	16.0	16.6	17.3	17.1	17.5	18.1	18.9	18.3	18.8	19.5	20.2	19.6	20.1	20.8	21.6	20.8	21.3	22.1	23.0
		Hi PR	162	174	184	192	182	196	207	216	207	223	235	245	236	253	268	279	265	285	301	314	293	315	333	347
		Lo PR	63	67	73	77	66	70	77	82	69	73	80	85	72	77	84	89	76	80	88	94	78	83	91	97
	1900	MBh	56.7	58.0	61.9	66.2	55.4	56.6	60.5	64.7	54.1	55.3	59.0	63.1	52.8	53.9	**57.6**	61.6	50.1	51.2	54.7	58.5	46.4	47.4	50.7	54.2
		S/T	0.90	0.84	0.68	0.51	0.93	0.87	0.71	0.53	0.95	0.89	0.73	0.54	0.98	0.92	**0.75**	0.56	1.00	0.96	0.78	0.58	1.00	0.96	0.78	0.59
		ΔT	25	24	20	16	25	24	21	17	25	24	21	17	25	24	**21**	17	24	24	21	16	22	22	19	15
		kW	3.68	3.77	3.90	4.04	4.00	4.09	4.24	4.39	4.28	4.38	4.53	4.70	4.52	4.63	**##**	4.97	4.73	4.84	5.02	5.20	4.91	5.03	5.21	5.40
		Amps	14.3	14.6	15.1	15.7	15.5	15.9	16.4	17.1	16.9	17.4	18.0	18.7	18.1	18.6	**19.3**	20.0	19.4	19.9	20.6	21.4	20.6	21.1	21.9	22.7
		Hi PR	160	173	182	190	180	194	205	213	205	220	233	243	233	251	**265**	276	262	282	298	311	290	312	329	344
		Lo PR	62	66	72	77	65	70	76	81	68	72	79	84	71	76	**83**	88	75	80	87	93	77	82	90	96
	1663	MBh	52.4	53.5	57.2	61.1	51.1	52.3	55.8	59.7	49.9	51.0	54.5	58.3	48.7	49.8	53.2	56.8	46.3	47.3	50.5	54.0	42.9	43.8	46.8	50.0
		S/T	0.86	0.81	0.66	0.49	0.90	0.84	0.68	0.51	0.92	0.86	0.70	0.52	0.95	0.89	0.72	0.54	0.98	0.92	0.75	0.56	0.99	0.93	0.76	0.57
		ΔT	25	24	21	17	25	24	21	17	25	24	21	17	26	24	21	17	25	24	21	17	23	23	20	16
		kW	3.59	3.67	3.80	3.93	3.89	3.98	4.12	4.27	4.16	4.26	4.41	4.57	4.40	4.50	4.67	4.83	4.60	4.71	4.88	5.06	4.78	4.89	5.07	5.25
		Amps	13.9	14.2	14.7	15.3	15.0	15.4	16.0	16.6	16.4	16.8	17.4	18.1	17.6	18.1	18.7	19.5	18.8	19.3	20.0	20.8	20.0	20.5	21.2	22.1
		Hi PR	156	167	177	184	175	188	198	207	199	214	226	235	226	243	257	268	254	274	289	302	281	303	320	333
		Lo PR	60	64	70	74	63	68	74	79	66	70	77	82	69	74	81	86	73	77	84	90	75	80	87	93
85	2138	MBh	59.4	60.6	63.5	67.7	58.1	59.2	62.0	66.1	56.7	57.8	60.5	64.6	55.3	56.4	59.0	63.0	52.5	53.5	56.1	59.8	48.7	49.6	51.9	55.4
		S/T	0.98	0.95	0.86	0.70	1.00	0.98	0.89	0.72	1.00	1.00	0.91	0.74	1.00	1.00	0.94	0.76	1.00	1.00	0.98	0.79	1.00	1.00	0.98	0.80
		ΔT	25	25	23	20	25	25	24	21	24	25	24	21	24	24	24	21	23	23	24	20	21	21	22	19
		kW	3.75	3.84	3.97	4.11	4.07	4.17	4.31	4.47	4.35	4.46	4.62	4.78	4.60	4.71	4.88	5.06	4.82	4.93	5.11	5.30	5.00	5.12	5.31	5.50
		Amps	14.5	14.9	15.4	16.0	15.8	16.2	16.8	17.4	17.2	17.7	18.3	19.0	18.5	19.0	19.6	20.4	19.8	20.3	21.0	21.8	21.0	21.5	22.3	23.2
		Hi PR	164	176	186	194	184	198	209	218	209	225	237	248	238	256	270	282	268	288	304	317	296	318	336	350
		Lo PR	63	67	73	78	67	71	78	83	69	74	81	86	73	78	85	90	76	81	89	94	79	84	92	98
	1900	MBh	57.7	58.8	61.6	65.7	56.4	57.5	60.2	64.2	55.0	56.1	58.7	62.7	53.7	54.7	57.3	61.1	51.0	52.0	54.4	58.1	47.2	48.2	50.4	53.8
		S/T	0.94	0.91	0.82	0.66	0.97	0.94	0.85	0.69	1.00	0.96	0.87	0.71	1.00	0.99	0.90	0.73	1.00	1.00	0.93	0.76	1.00	1.00	0.94	0.76
		ΔT	26	26	24	21	27	26	25	21	27	26	25	21	26	26	25	22	25	25	25	21	23	23	23	20
		kW	3.72	3.80	3.94	4.08	4.03	4.13	4.28	4.43	4.31	4.42	4.58	4.74	4.56	4.67	4.84	5.02	4.77	4.89	5.06	5.25	4.95	5.07	5.26	5.45
		Amps	14.4	14.8	15.3	15.9	15.6	16.0	16.6	17.3	17.1	17.5	18.1	18.9	18.3	18.8	19.5	20.2	19.6	20.1	20.8	21.6	20.8	21.3	22.1	23.0
		Hi PR	162	174	184	192	182	196	207	216	207	223	235	245	236	253	268	279	265	285	301	314	293	315	333	347
		Lo PR	63	67	73	77	66	70	77	82	69	73	80	85	72	77	84	89	76	80	88	94	78	83	91	97
	1663	MBh	53.3	54.3	56.9	60.7	52.0	53.0	55.5	59.3	50.8	51.8	54.2	57.8	49.5	50.5	52.9	56.4	47.1	48.0	50.3	53.6	43.6	44.4	46.6	49.7
		S/T	0.91	0.87	0.79	0.64	0.94	0.91	0.82	0.66	0.96	0.93	0.84	0.68	0.99	0.96	0.86	0.70	1.00	0.99	0.90	0.73	1.00	1.00	0.91	0.73
		ΔT	27	26	25	21	27	27	25	22	27	27	25	22	27	27	25	22	26	26	25	22	24	25	23	20
		kW	3.62	3.70	3.83	3.97	3.93	4.02	4.16	4.31	4.20	4.30	4.45	4.61	4.44	4.55	4.71	4.88	4.64	4.75	4.93	5.10	4.82	4.94	5.11	5.30
		Amps	14.0	14.3	14.8	15.4	15.2	15.6	16.1	16.8	16.6	17.0	17.6	18.3	17.8	18.2	18.9	19.6	19.0	19.5	20.2	21.0	20.2	20.7	21.4	22.3
		Hi PR	157	169	179	186	176	190	200	209	201	216	228	238	228	246	260	271	257	277	292	305	284	306	323	337
		Lo PR	61	65	71	75	64	68	74	79	67	71	77	82	70	74	81	87	73	78	85	91	76	81	88	94

IDB: Entering Indoor Dry Bulb Temperature
High and low pressures are measured at the liquid and suction service valves.

Shaded area reflects AHRI conditions

kW = Total system power
Amps = outdoor unit amps (comp.+fan)

Airflow Data

Model	Speed	Volts		E.S.P (In. of H_2O)							
				0.1	0.2	0.3	0.4	0.5	0.6	0.7	0.8
GPH13 24H21AB	Low	230	CFM	630	580	545	500	470	-	-	-
			Watts	155	150	145	140	135	-	-	-
	Med	230	CFM	865	815	770	720	670	610	555	-
			Watts	230	220	215	210	200	195	185	-
	High	230	CFM	1,190	1,130	1,060	990	935	845	770	680
			Watts	370	360	345	335	320	310	290	275
GPH13 30H21AB	Low	230	CFM	1,150	1,080	1,025	975	925	845	-	-
			Watts	340	330	315	305	295	280	-	-
	Med	230	CFM	1,335	1,275	1,205	1,135	1,075	985	910	845
			Watts	425	415	400	385	370	350	330	310
	High	230	CFM	1,435	1,355	1,290	1,210	1,130	1,040	960	885
			Watts	485	465	455	435	415	400	385	370
GPH13 36H21AB	Low	230	CFM	1,180	1,125	1,075	1,020	955	875	655	-
			Watts	335	325	315	305	295	275	240	-
	Med	230	CFM	1,350	1,280	1,205	1,130	1,050	985	910	845
			Watts	435	420	405	385	375	350	330	310
	High	230	CFM	1,450	1,370	1,290	1,205	1,130	1,040	960	885
			Watts	495	480	465	440	425	400	385	370
GPH13 42H21AB	Low	230	CFM	1,425	1,410	1,355	1,310	1,245	1,170	1,080	-
			Watts	450	445	430	420	405	390	370	-
	Med	230	CFM	1,620	1,595	1,545	1,485	1,425	1,345	1,250	1,160
			Watts	550	540	525	510	495	475	450	425
	High	230	CFM	1,945	1,935	1,875	1,800	1,730	1,635	1,535	1,440
			Watts	765	755	735	715	695	670	640	615
GPH13 48H21AB	Low	230	CFM	1,425	1,410	1,355	1,310	1,245	1,170	1,080	-
			Watts	450	445	430	420	405	390	370	-
	Med	230	CFM	1,720	1,660	1,585	1,520	1,460	1,365	1,270	-
			Watts	560	555	540	530	520	490	470	-
	High	230	CFM	2,110	2,060	1,980	1,895	1,795	1,705	1,590	1,500
			Watts	785	780	765	745	720	705	665	625
GPH13 60H21AB	Low	230	CFM	1,860	1,800	1,745	1,695	1,650	1,600	1,555	1,500
			Watts	410	425	440	455	470	480	495	500
	Med	230	CFM	1,990	1,945	1,885	1,835	1,785	1,740	1,695	1,645
			Watts	510	520	530	545	555	570	585	590
	High	230	CFM	2,100	2,045	1,985	1,945	1,895	1,850	1,800	1,750
			Watts	595	610	620	630	645	660	670	680

Notes:

1. Data shown is dry coil; wet coil pressure drop is approximate.
2. 0.1” H_2O, for 2-row indoor coil; 0.2” H_2O, for 3-row indoor coil; and 0.3” H_2O, for 4-row indoor coil
3. Data shown does not include filter pressure drop, approx. 0.08” H_2O.
4. ALL MODELS SHOULD RUN NO LESS THAN 350 CFM / TON, USE HIGHER SPEED TAP OR NEXT SIZE LARGER BLOWER ASM. See Repair Parts list.
5. Reduce airflow by 2% for 208V operation.

Expanded Heating Data

GPH1324H21*

	Outdoor Ambient Temperature																	
	65	60	55	50	47	45	40	35	30	25	20	17	15	10	5	0	-5	-10
MBh	30.2	28.6	26.9	25.1	24.0	23.3	21.6	19.9	16.9	15.6	14.4	13.6	13.1	11.8	10.4	9.1	7.8	6.4
ΔT	32.9	31.1	29.3	27.4	26.1	25.3	23.5	21.7	18.5	17.0	15.7	14.8	14.3	12.8	11.3	9.9	8.4	6.9
kW	2.23	2.18	2.14	2.10	2.07	2.05	2.01	1.96	2.02	1.97	1.93	1.90	1.88	1.83	1.79	1.74	1.69	1.65
Amps	11.1	10.4	9.8	9.3	9.0	8.9	8.4	8.0	7.8	7.5	7.2	7.0	6.9	6.7	6.3	6.0	5.6	5.2
COP	3.96	3.83	3.68	3.51	3.39	3.32	3.15	2.97	2.45	2.32	2.19	2.09	2.04	1.87	1.70	1.53	1.34	1.13
EER	13.5	13.1	12.6	12.0	11.6	11.3	10.8	10.1	8.4	7.9	7.5	7.2	7.0	6.4	5.8	5.2	4.6	3.9
Hi PR	238	228	220	210	205	201	193	186	178	170	163	159	156	150	145	139	134	129
Lo PR	78	73	68	62	59	57	52	46	42	37	33	31	30	25	22	18	16	12

GPH1330H21**

	Outdoor Ambient Temperature																	
	65	60	55	50	47	45	40	35	30	25	20	17	15	10	5	0	-5	-10
MBh	34.4	32.6	30.7	28.7	27.4	26.6	24.7	22.7	19.7	18.2	16.7	15.8	15.2	13.7	12.1	10.6	9.0	7.4
ΔT	30.4	28.8	27.1	25.3	24.2	23.4	21.7	20.1	17.4	16.0	14.8	13.9	13.4	12.0	10.7	9.3	7.9	6.5
kW	2.70	2.65	2.59	2.54	2.51	2.49	2.44	2.38	2.34	2.28	2.23	2.20	2.18	2.12	2.07	2.02	1.97	1.91
Amps	13.1	12.2	11.5	10.9	10.6	10.4	9.9	9.5	9.2	8.8	8.5	8.3	8.2	7.9	7.5	7.1	6.7	6.2
COP	3.73	3.60	3.46	3.30	3.19	3.12	2.96	2.79	2.46	2.33	2.19	2.10	2.04	1.88	1.71	1.53	1.34	1.13
EER	12.7	12.3	11.8	11.3	10.9	10.7	10.1	9.5	8.4	8.0	7.5	7.2	7.0	6.4	5.8	5.2	4.6	3.9
Hi PR	244	234	225	215	210	206	198	190	182	174	167	163	160	154	148	142	137	132
Lo PR	80	74	69	63	60	58	53	47	43	38	33	31	30	25	22	18	16	13

Above data is for nominal CFM and 70º indoor dry bulb. Instantaneous capacity listed. Amps = Unit amps (comp.+ evaporator motor + condenser fan motor)
High pressure is measured at the liquid line access fitting. kW = Total system power Low pressure is measured at the compressor suction access fitting.

GPH1336H21**

	Outdoor Ambient Temperature																	
	65	60	55	50	47	45	40	35	30	25	20	17	15	10	5	0	-5	-10
MBh	42.2	40.0	37.6	35.2	33.6	32.6	30.2	27.9	22.4	20.7	19.1	18.0	17.3	15.6	13.8	12.0	10.3	8.4
ΔT	31.3	29.6	27.9	26.1	24.9	24.1	22.4	20.7	16.6	15.3	14.1	13.3	12.8	11.5	10.2	8.9	7.6	6.2
kW	3.12	3.06	3.00	2.93	2.90	2.87	2.82	2.76	2.66	2.60	2.54	2.51	2.49	2.43	2.37	2.31	2.25	2.19
Amps	12.2	11.4	10.8	10.3	10.0	9.8	9.4	9.0	8.7	8.4	8.1	8.0	7.9	7.6	7.2	6.9	6.5	6.1
COP	3.97	3.83	3.68	3.51	3.39	3.31	3.14	2.96	2.47	2.33	2.19	2.10	2.04	1.88	1.70	1.52	1.33	1.12
EER	13.6	13.1	12.6	12.0	11.6	11.3	10.7	10.1	8.4	8.0	7.5	7.2	7.0	6.4	5.8	5.2	4.6	3.8
Hi PR	238	228	220	210	205	201	193	186	178	170	163	159	156	150	145	139	134	129
Lo PR	81	75	70	65	61	59	54	48	43	39	34	32	31	26	22	19	16	13

GPH1342H21*

	Outdoor Ambient Temperature																	
	65	60	55	50	47	45	40	35	30	25	20	17	15	10	5	0	-5	-10
MBh	47.8	45.2	42.6	39.8	38.0	36.8	34.2	31.5	27.2	25.1	23.1	21.8	21.0	18.8	16.7	14.6	12.4	10.2
ΔT	30.5	28.9	27.2	25.4	24.3	23.5	21.8	20.1	17.3	16.0	14.7	13.9	13.4	12.0	10.7	9.3	7.9	6.5
kW	3.32	3.26	3.20	3.14	3.10	3.07	3.01	2.95	2.94	2.88	2.82	2.78	2.76	2.69	2.63	2.57	2.50	2.44
Amps	12.9	12.1	11.5	10.9	10.6	10.4	10.0	9.6	9.3	9.0	8.6	8.5	8.4	8.1	7.7	7.4	7.0	6.5
COP	4.21	4.06	3.89	3.71	3.59	3.51	3.32	3.13	2.70	2.55	2.40	2.29	2.23	2.05	1.86	1.66	1.45	1.22
EER	14.4	13.9	13.3	12.7	12.3	12.0	11.3	10.7	9.2	8.7	8.2	7.8	7.6	7.0	6.4	5.7	5.0	4.2
Hi PR	232	223	214	205	200	196	189	181	173	166	159	155	152	147	141	135	130	126
Lo PR	80	74	69	63	60	58	53	47	43	38	33	31	30	25	22	18	16	13

Above data is for nominal CFM and 70º indoor dry bulb. Instantaneous capacity listed. Amps = Unit amps (comp.+ evaporator motor + condenser fan motor)
High pressure is measured at the liquid line access fitting. kW = Total system power Low pressure is measured at the compressor suction access fitting.

Expanded Heating Data (cont.)

GPH1348H21*

	Outdoor Ambient Temperature																	
	65	60	55	50	47	45	40	35	30	25	20	17	15	10	5	0	-5	-10
MBh	56.6	53.6	50.4	47.1	45.0	43.6	40.5	37.4	28.9	26.7	24.6	23.2	22.3	20.0	17.8	15.5	13.2	10.8
ΔT	31.7	30.1	28.3	26.4	25.3	24.5	22.7	21.0	16.2	15.0	13.8	13.0	12.5	11.2	10.0	8.7	7.4	6.1
kW	4.27	4.19	4.12	4.04	4.00	3.97	3.90	3.82	3.58	3.51	3.44	3.40	3.37	3.30	3.23	3.16	3.09	3.02
Amps	21.4	20.0	18.8	17.9	17.3	17.0	16.2	15.5	14.9	14.4	13.8	13.5	13.4	12.8	12.1	11.5	10.9	10.0
COP	3.88	3.74	3.58	3.41	3.29	3.22	3.04	2.86	2.36	2.22	2.09	2.00	1.94	1.78	1.61	1.43	1.25	1.05
EER	13.2	12.8	12.2	11.7	11.3	11.0	10.4	9.8	8.1	7.6	7.1	6.8	6.6	6.1	5.5	4.9	4.3	3.6
Hi PR	244	234	225	215	210	206	198	190	182	174	167	163	160	154	148	142	137	132
Lo PR	77	71	67	61	58	56	51	46	41	37	32	30	29	25	21	18	16	12

GPH1360H21*

	Outdoor Ambient Temperature																	
	65	60	55	50	47	45	40	35	30	25	20	17	15	10	5	0	-5	-10
MBh	68.4	64.7	60.9	57.0	54.4	52.7	49.0	45.2	36.6	33.8	31.1	29.4	28.3	25.4	22.5	19.6	16.8	13.7
ΔT	33.3	31.5	29.7	27.8	26.5	25.7	23.9	22.0	17.9	16.5	15.2	14.3	13.8	12.4	11.0	9.6	8.2	6.7
kW	5.04	4.94	4.84	4.75	4.69	4.65	4.55	4.46	4.35	4.25	4.16	4.10	4.06	3.96	3.87	3.77	3.67	3.58
Amps	22.1	20.7	19.5	18.6	18.0	17.7	16.9	16.2	15.6	15.1	14.5	14.2	14.1	13.5	12.8	12.2	11.6	10.7
COP	3.97	3.83	3.68	3.51	3.39	3.32	3.15	2.97	2.46	2.33	2.19	2.10	2.04	1.88	1.70	1.52	1.33	1.12
EER	13.6	13.1	12.6	12.0	11.6	11.3	10.8	10.1	8.4	8.0	7.5	7.2	7.0	6.4	5.8	5.2	4.6	3.8
Hi PR	238	228	220	210	205	201	193	186	178	170	163	159	156	150	145	139	134	129
Lo PR	74	69	65	59	56	54	50	44	40	36	31	29	28	24	20	17	15	12

Above data is for nominal CFM and 70º indoor dry bulb. Instantaneous capacity listed. Amps = Unit amps (comp.+ evaporator motor + condenser fan motor)
High pressure is measured at the liquid line access fitting. kW = Total system power Low pressure is measured at the compressor suction access fitting.

Heat Kit Electrical Data (Blower Only, Heat Mode)

Model and Heat Kit Usage	Circuit #1		Circuit #2		Actual kW / BTU/h @ 240V
	MCA[1]	MOD[2]	MCA[1]	MOD[2]	
GPH1324H21A*	**1.5 / 1.5**	--	--	--	--
HKR-05*, HKR-05C*	24 / 27	30 / 30	--	--	4.75 / 16,200
HKR-08*, HKR-08C*	33 / 38	40 / 40	--	--	7 / 23,800
HKR-10*, HKR-10C*	45 / 51	60 / 60	--	--	9.5 / 32,400
GPH1330H21A*	**2.4 / 2.4**	--	--	--	--
HKR-05*, HKR-05C*	24 / 27	30 / 30	--	--	4.75 / 16,200
HKR-08*, HKR-08C*	34 / 39	40 / 40	--	--	7 / 23,800
HKR-10*, HKR-10C*	45 / 52	60 / 60	--	--	9.5 / 32,400
HKR-15*, HKR-15C*	45 / 52	60 / 60	22 / 25	30 / 30	14.25 / 48,600
GPH1336H21A*	**2.4 / 2.4**	--	--	--	--
HKR-05*, HKR-05C*	24 / 27	30 / 30	--	--	4.75 / 16,200
HKR-08*, HKR-08C*	34 / 39	40 / 40	--	--	7 / 23,800
HKR-10*, HKR-10C*	45 / 52	60 / 60	--	--	9.5 / 32,400
HKR-15*, HKR-15C*	45 / 52	60 / 60	22 / 25	30 / 30	14.25 / 48,600
GPH1342H21A*	**3.9 / 3.9**	--	--	--	--
HKR-05*, HKR-05C*	25 / 27	30 / 30	--	--	4.75 / 16,200
HKR-08*, HKR-08C*	34 / 39	40 / 40	--	--	7 / 23,800
HKR-10*, HKR-10C*	46 / 52	60 / 60	--	--	9.5 / 32,400
HKR-15*, HKR-15C*	46 / 52	60 / 60	22 / 25	30 / 30	14.25 / 48,600
HKR-20*,HKR-20C*	46 / 52	60 / 60	43 / 49	60 / 60	19.5 / 66,500
GPH1348H21A*	**3.9 / 3.9**	--	--	--	--
HKR-05*, HKR-05C*	25 / 28	30 / 30	--	--	4.75 / 16,200
HKR-08*, HKR-08C*	34 / 40	40 / 40	--	--	7 / 23,800
HKR-10*, HKR-10C*	46 / 53	60 / 60	--	--	9.5 / 32,400
HKR-15*, HKR-15C*	46 / 52	60 / 60	22 / 25	30 / 30	14.25 / 48,600
HKR-20*,HKR-20C*	46 / 52	60 / 60	43 / 49	60 / 60	19.5 / 66,500
GPH1360H21A*	**6.0 / 6.0**	--	--	--	--
HKR-05*, HKR-05C*	26 / 30	30 / 30	--	--	4.75 / 16,200
HKR-08*, HKR-08C*	36 / 40	40 / 40	--	--	7 / 23,800
HKR-10*, HKR-10C*	48 / 54	60 / 60	--	--	9.5 / 32,400
HKR-15*, HKR-15C*	48 / 54	60 / 60	22 / 25	30 / 30	14.25 / 48,600
HKR-20*,HKR-20C*	48 / 54	60 / 60	43 / 49	60 / 60	19.5 / 66,500

[1] Minimum Circuit Ampacity @ 208 / 240V

[2] Maximum Overcurrent Protection (amps) @ 208 / 240V

* Indicates revision letter that may or may not be designated

Dimensions

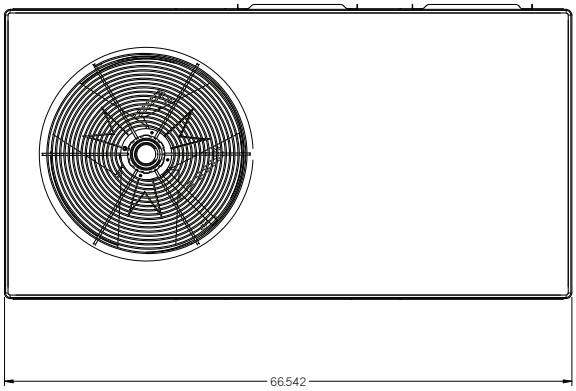

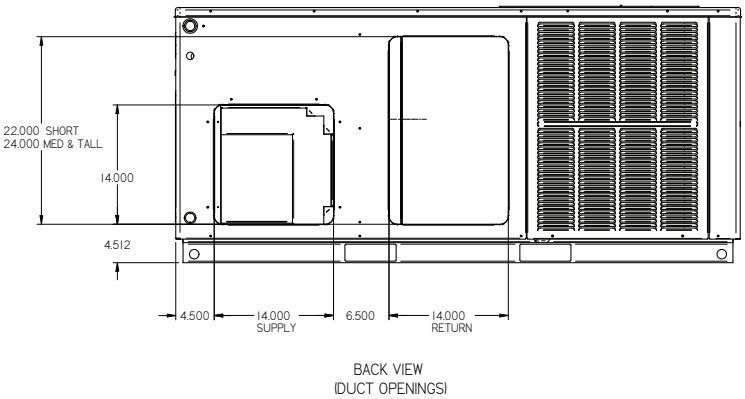

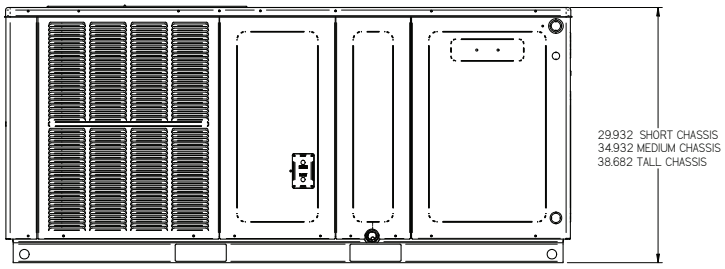

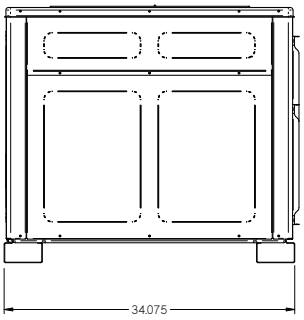

Model	Dimensions			Chasis Size		
	W”	D”	H”	Small	Med.	Large
GPH1324H21A*	66½	34	30	X		
GPH1330H21A*	66½	34	30	X		
GPH1330H21AD	66½	34	30	X		
GPH1336H21A/B	66½	34	35		X	
GPH1336H21AC/D	66½	34	35		X	
GPH1336H21AE	66½	34	35		X	
GPH1342H21AD	66½	34	35		X	
GPH1342H21AE	66½	34	35		X	
GPH1348H21A*	66½	34	38⅔			X
GPH1360H21A*	66½	34	38⅔			X

WIRING DIAGRAM — GPH1324-48H21A*

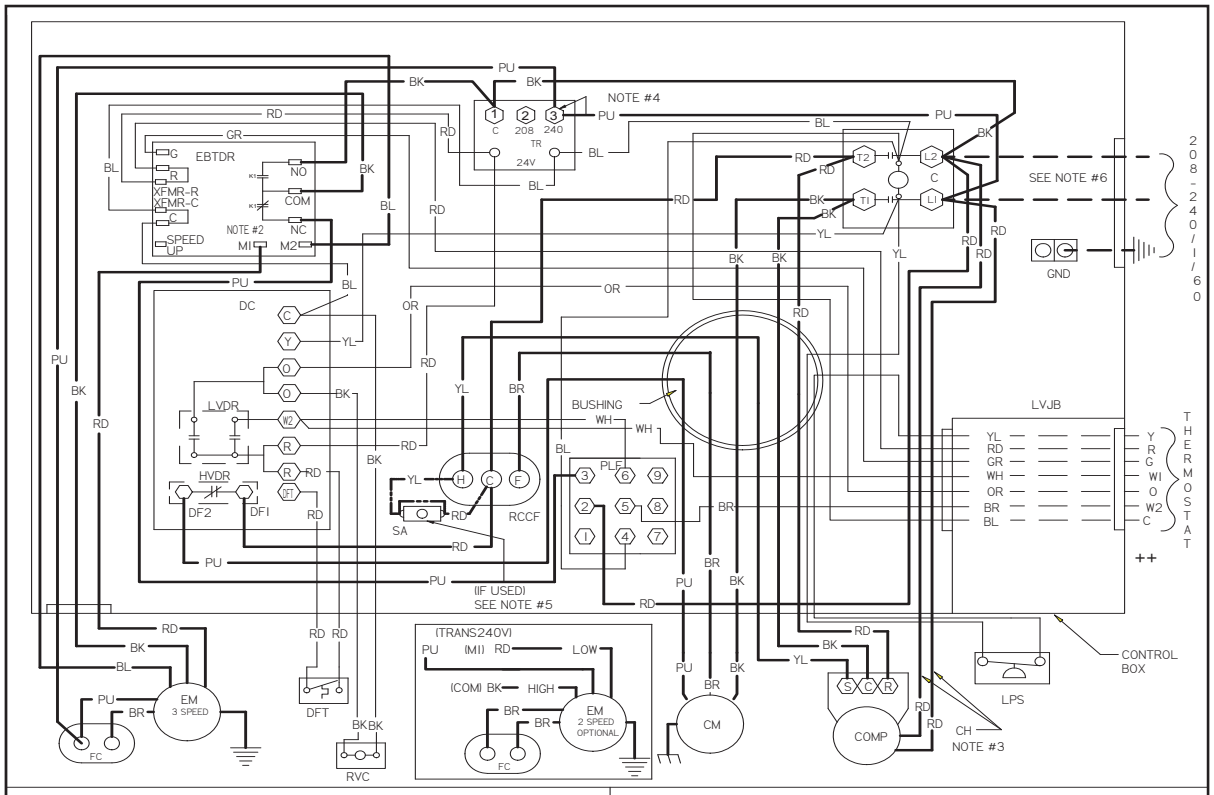

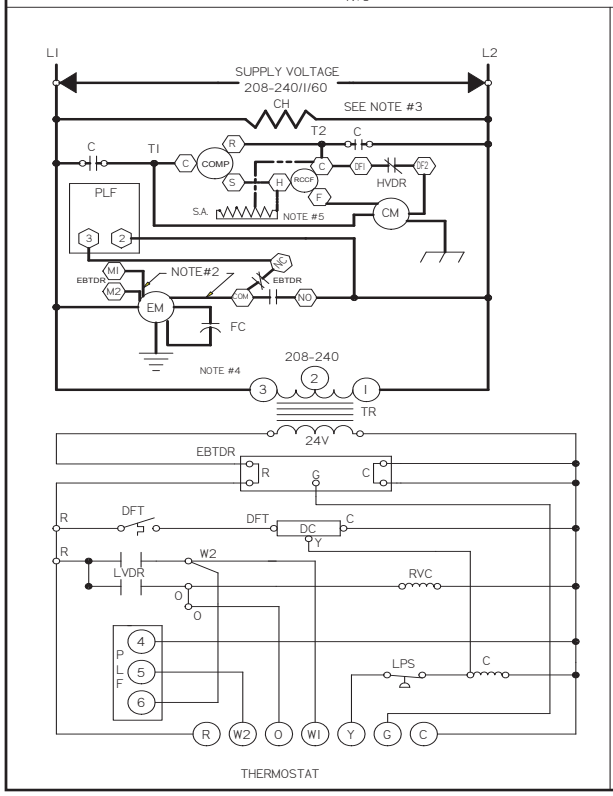

COMPONENT LEGEND

C	CONTACTOR
CH	CRACKCASE HEATER
CM	CONDENSER MOTOR
COMP	COMPRESSOR
DC	DEFROST CONTROL
DFT	DEFROST THERMOSTAT
EBTDR	ELECTRONIC BLOWER TIME DELAY RELAY
EM	EVAPORATOR MOTOR
FC	FAN CAPACITOR
GND	EQUIPMENT GROUND
HVDR	HIGH VOLTAGE DEFROST RELAY
LPS	LOW PRESSURE SWITCH
LVDR	LOW VOLTAGE DEFROST RELAY
LVJB	LOW VOLTAGE JUNCTION BOX
PLF	FEMALE PLUG / CONNECTOR
RVC	REVERSING VAVLE COIL
RCCF	RUN CAPACITOR FOR COMPRESSOR AND FAN
SA	START ASSIST
TR	TRANSFORMER

FACTORY WIRING
- LINE VOLTAGE
- LOW VOLTAGE
- OPTINAL HIGH VOLTAGE

FIELD WIRING
- HIGH VOLTAGE
- LOW VOLTAGE

WIRE CODE

BK	BLACK
BL	BLUE
BR	BROWN
GR	GREEN
OR	ORANGE
PU	PURPLE
RD	RED
WH	WHITE
YL	YELLOW

NOTES:

1. REPLACEMENT WIRE MUST BE SAME SIZE AND TYPE INSULATION AS ORIGINAL (AT LEAST 105°C) USE COPPER CONDUCTOR ONLY.
2. TO CHANGE EVAPORATOR MOTOR SPEED REPLACE LEAD ON EBTDR "COM" WITH LEAD ON EBTDR "M1" OR "M2"
3. CRANKCASE HEAT NOT SUPPLIED ON ALL UNITS.
4. FOR 208 VOLT TRANSFORMER OPERATION MOVE PURPLE WIRES FROM TERMINAL 3 TERMINAL 2 ON TRANSFORMER.
5. START ASSIST FACTOR EQUIPED WHEN REQUIRED
6. USE COPPER CONDUCTORS ONLY

++ USE N.E.C. CLASS 2 WIRE

SEE UNIT RATING PLATE FOR TYPE AND SIZE OF OVER CURRENT PROTECTION

208-240/1/60 0140G00034P

WARNING

High Voltage: Disconnect all power before servicing or installing this unit. Multiple power sources may be present. Failure to do so may cause property damage, personal injury, or death.

Wiring is subject to change. Always refer to the wiring diagram or the unit for the most up-to-date wiring.

WIRING DIAGRAM — GPH1324-48H21AB/AC

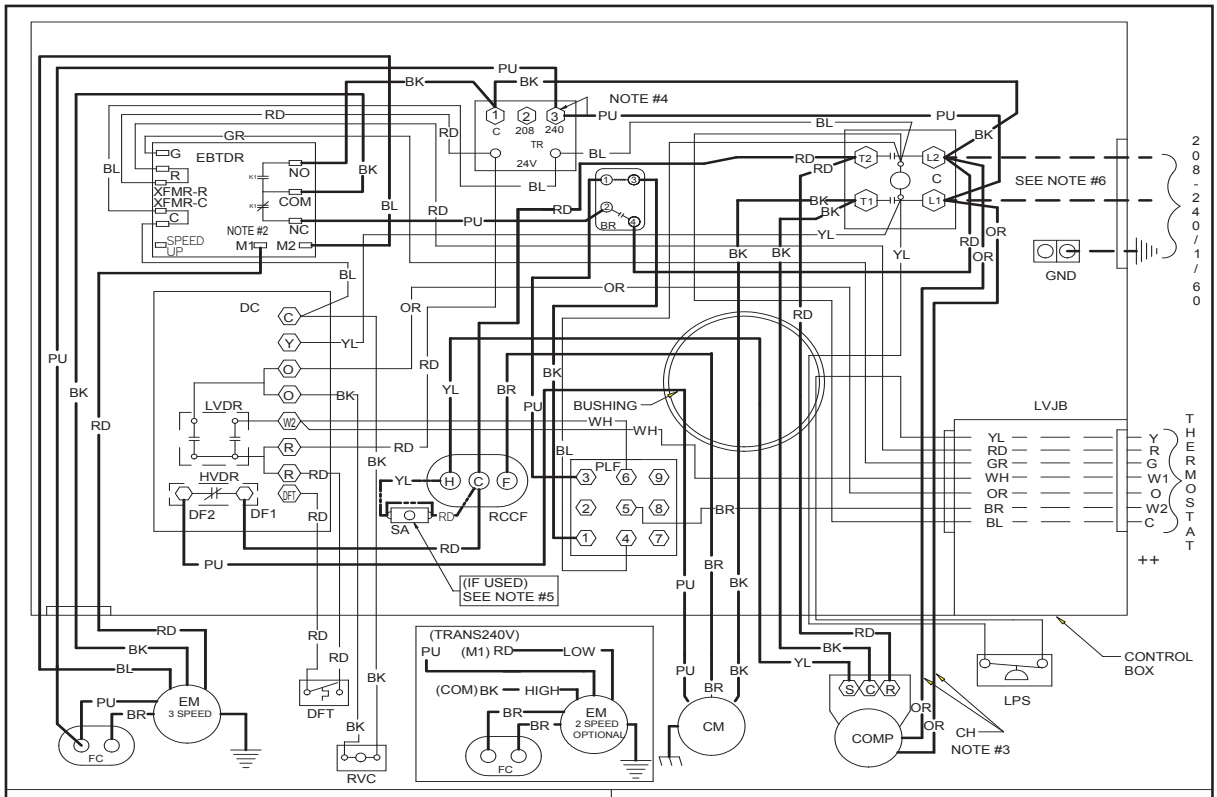

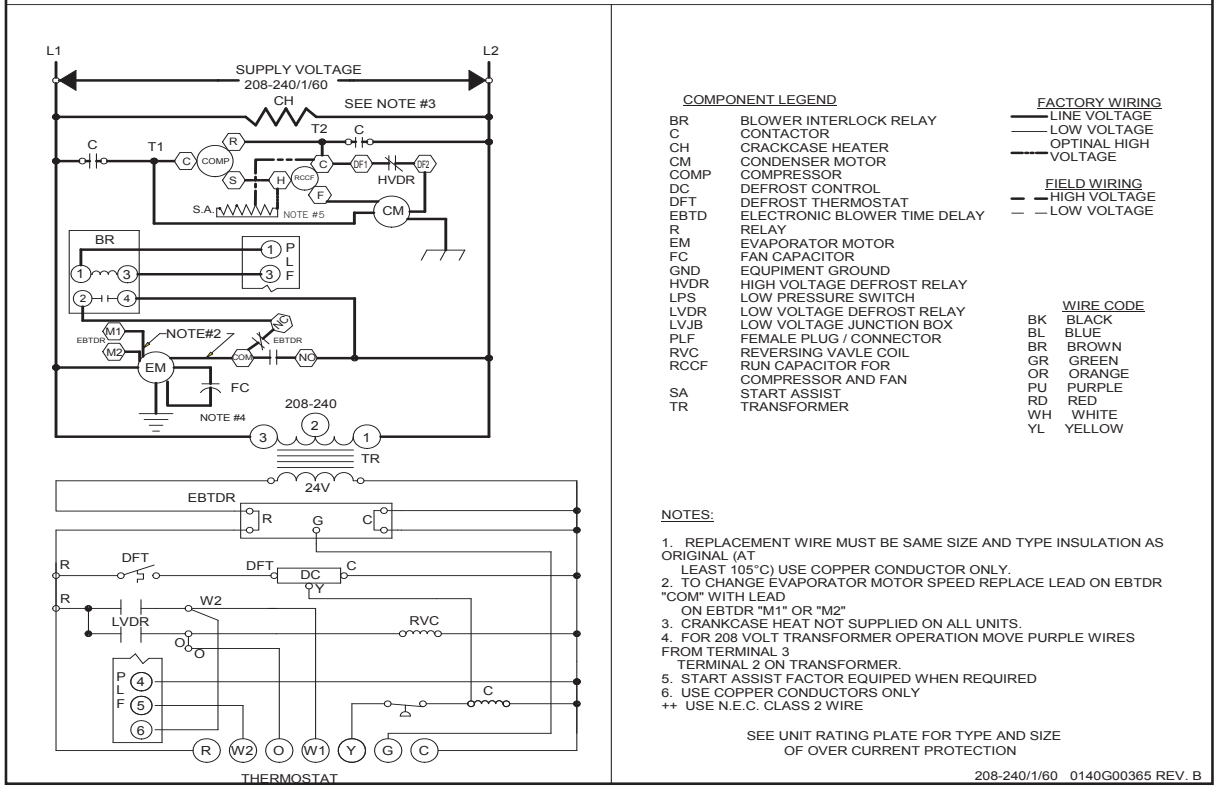

COMPONENT LEGEND

BR	BLOWER INTERLOCK RELAY
C	CONTACTOR
CH	CRACKCASE HEATER
CM	CONDENSER MOTOR
COMP	COMPRESSOR
DC	DEFROST CONTROL
DFT	DEFROST THERMOSTAT
EBTD	ELECTRONIC BLOWER TIME DELAY
R	RELAY
EM	EVAPORATOR MOTOR
FC	FAN CAPACITOR
GND	EQUIPMENT GROUND
HVDR	HIGH VOLTAGE DEFROST RELAY
LPS	LOW PRESSURE SWITCH
LVDR	LOW VOLTAGE DEFROST RELAY
LVJB	LOW VOLTAGE JUNCTION BOX
PLF	FEMALE PLUG / CONNECTOR
RVC	REVERSING VAVLE COIL
RCCF	RUN CAPACITOR FOR COMPRESSOR AND FAN
SA	START ASSIST
TR	TRANSFORMER

FACTORY WIRING
- LINE VOLTAGE
- LOW VOLTAGE
- OPTINAL HIGH VOLTAGE

FIELD WIRING
- HIGH VOLTAGE
- LOW VOLTAGE

WIRE CODE

BK	BLACK
BL	BLUE
BR	BROWN
GR	GREEN
OR	ORANGE
PU	PURPLE
RD	RED
WH	WHITE
YL	YELLOW

NOTES:

1. REPLACEMENT WIRE MUST BE SAME SIZE AND TYPE INSULATION AS ORIGINAL (AT LEAST 105°C) USE COPPER CONDUCTOR ONLY.
2. TO CHANGE EVAPORATOR MOTOR SPEED REPLACE LEAD ON EBTDR "COM" WITH LEAD ON EBTDR "M1" OR "M2"
3. CRANKCASE HEAT NOT SUPPLIED ON ALL UNITS.
4. FOR 208 VOLT TRANSFORMER OPERATION MOVE PURPLE WIRES FROM TERMINAL 3 TERMINAL 2 ON TRANSFORMER.
5. START ASSIST FACTOR EQUIPED WHEN REQUIRED
6. USE COPPER CONDUCTORS ONLY

++ USE N.E.C. CLASS 2 WIRE

SEE UNIT RATING PLATE FOR TYPE AND SIZE OF OVER CURRENT PROTECTION

208-240/1/60 0140G00365 REV. B

WARNING

High Voltage: Disconnect all power before servicing or installing this unit. Multiple power sources may be present. Failure to do so may cause property damage, personal injury, or death.

Wiring is subject to change. Always refer to the wiring diagram or the unit for the most up-to-date wiring.

WIRING DIAGRAM — GPH1360H21*A*A

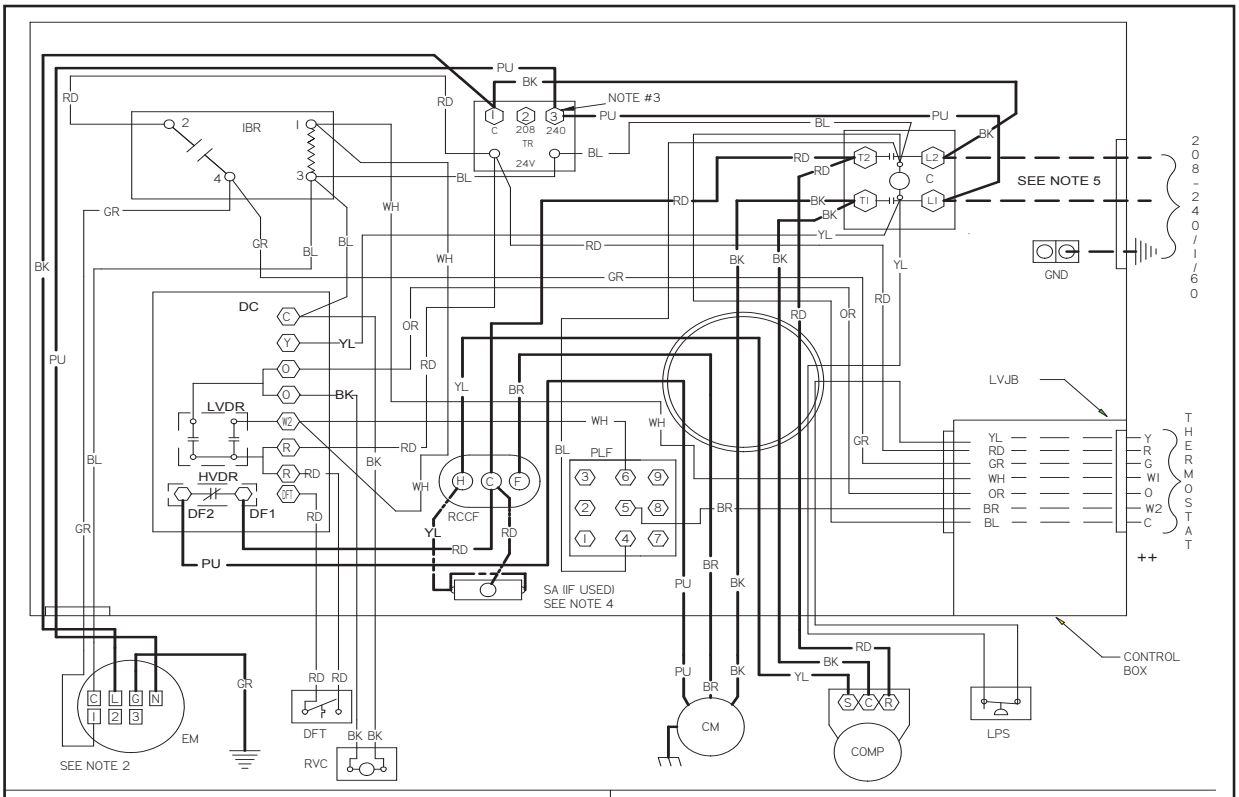

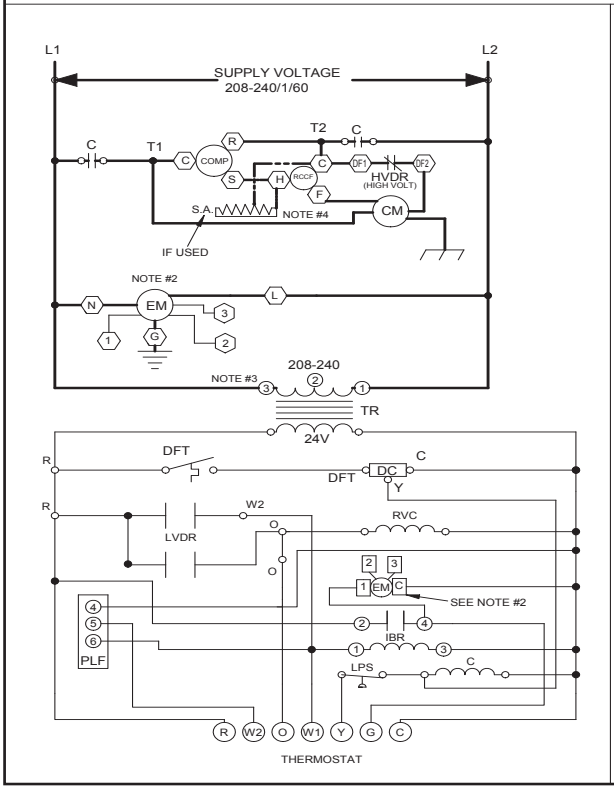

COMPONENT LEGEND

C	CONTACTOR
CM	CONDENSER MOTOR
COMP	COMPRESSOR
DC	DEFROST CONTROL
DFT	DEFROST THERMOSTAT
EM	EVAPORATOR MOTOR
GND	EQUIPMENT GROUND
HVDR	HIGH VOLTAGE DEFROST RELAY
IBR	INDOOR BLOWER RELAY
LPS	LOW PRESSURE SWITCH
LVDR	LOW VOLTAGE DEFROST RELAY
LVJB	LOW VOLTAGE JUNCTION BOX
PLF	FEMALE PLUG / CONNECTOR
RVC	REVERSING VAVLE COIL
RCCF	RUN CAPACITOR FOR COMPRESSOR AND FAN
SA	START ASSIST
TR	TRANSFORMER

FACTORY WIRING
- LINE VOLTAGE
- LOW VOLTAGE
- OPTINAL HIGH VOLTAGE

FIELD WIRING
- HIGH VOLTAGE
- LOW VOLTAGE

WIRE CODE

BK	BLACK
BL	BLUE
BR	BROWN
GR	GREEN
OR	ORANGE
PU	PURPLE
RD	RED
WH	WHITE
YL	YELLOW

NOTES:

1. REPLACEMENT WIRE MUST BE SAME SIZE AND TYPE INSULATION AS ORIGINAL (AT LEAST 105°C) USE COPPER CONDUCTOR ONLY.
2. TO CHANGE EVAPORATOR MOTOR SPEED MOVE LEAD FROM EM "1" TO "2" OR "3". TERMINAL "3" IS HIGHEST SPEED.
3. FOR 208 VOLT TRANSFORMER OPERATION MOVE PURPLE WIRES FROM TERMINAL 3 TO TERMINAL 2 ON TRANSFORMER.
4. START ASSIST FACTOR EQUIPED WHEN REQUIRED
5. USE COPPER CONDUCTORS ONLY

++ USE N.E.C. CLASS 2 WIRE

SEE UNIT RATING PLATE FOR TYPE AND SIZE OF OVER CURRENT PROTECTION

208-240/1/60 - 0140G00081B

WARNING

High Voltage: Disconnect all power before servicing or installing this unit. Multiple power sources may be present. Failure to do so may cause property damage, personal injury, or death.

Wiring is subject to change. Always refer to the wiring diagram or the unit for the most up-to-date wiring.

WIRING DIAGRAM — GPH1360H21AB/AC

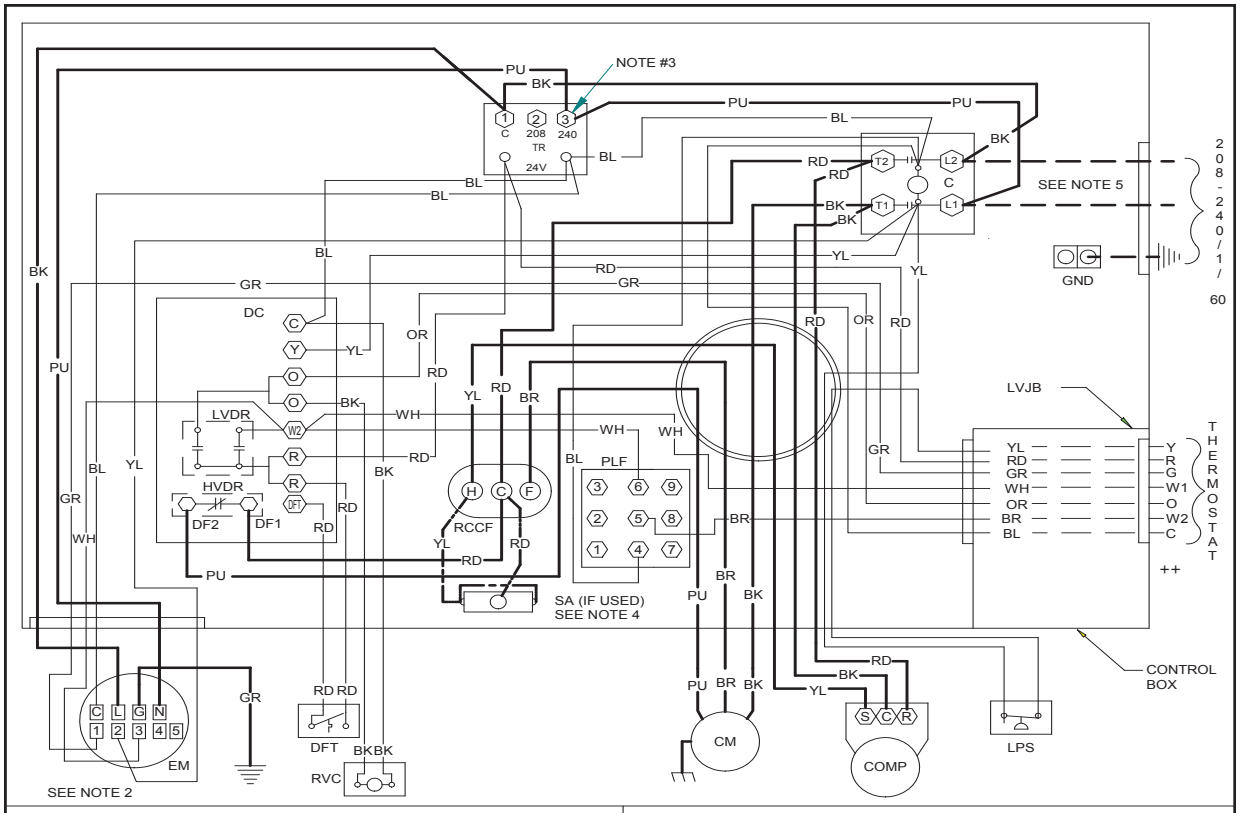

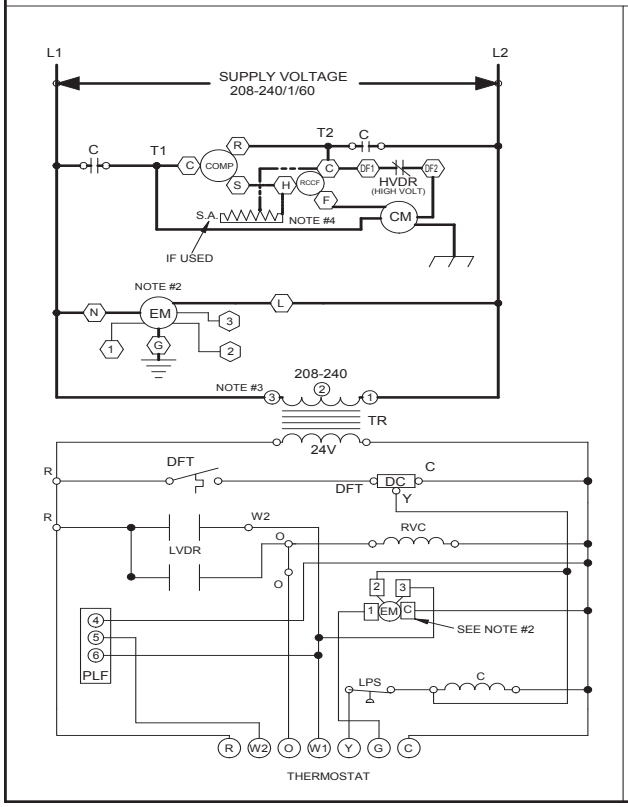

COMPONENT LEGEND

C	CONTACTOR
CM	CONDENSER MOTOR
COMP	COMPRESSOR
DC	DEFROST CONTROL
DFT	DEFROST THERMOSTAT
EM	EVAPORATOR MOTOR
GND	EQUIPMENT GROUND
HVDR	HIGH VOLTAGE DEFROST RELAY
LPS	LOW PRESSURE SWITCH
LVDR	LOW VOLTAGE DEFROST RELAY
LVJB	LOW VOLTAGE JUNCTION BOX
PLF	FEMALE PLUG / CONNECTOR
RVC	REVERSING VAVLE COIL
RCCF	RUN CAPACITOR FOR COMPRESSOR AND FAN
SA	START ASSIST
TR	TRANSFORMER

FACTORY WIRING
- LINE VOLTAGE
- LOW VOLTAGE
- OPTINAL HIGH VOLTAGE

FIELD WIRING
- HIGH VOLTAGE
- LOW VOLTAGE

WIRE CODE

BK	BLACK
BL	BLUE
BR	BROWN
GR	GREEN
OR	ORANGE
PU	PURPLE
RD	RED
WH	WHITE
YL	YELLOW

NOTES:

1. REPLACEMENT WIRE MUST BE SAME SIZE AND TYPE INSULATION AS ORIGINAL (AT LEAST 105°C) USE COPPER CONDUCTOR ONLY.
2. TO CHANGE EVAPORATOR MOTOR SPEED MOVE WHITE AND YELLOW LEADS FROM EM"2" AND "3" TO "4" AND "5". IF BOTH LEADS ARE ENERGIZED, THE HIGHER SPEED SETTING IS USED.
3. FOR 208 VOLT TRANSFORMER OPERATION MOVE PURPLE WIRES FROM TERMINAL 3 TO TERMINAL 2 ON TRANSFORMER.
4. START ASSIST FACTOR EQUIPED WHEN REQUIRED
5. USE COPPER CONDUCTORS ONLY

++ USE N.E.C. CLASS 2 WIRE

SEE UNIT RATING PLATE FOR TYPE AND SIZE OF OVER CURRENT PROTECTION

208-240/1/60 0140G00408

WARNING

High Voltage: Disconnect all power before servicing or installing this unit. Multiple power sources may be present. Failure to do so may cause property damage, personal injury, or death.

Wiring is subject to change. Always refer to the wiring diagram or the unit for the most up-to-date wiring.

Amana® is a trademark of Maytag Corporation or its related companies and used under license to Goodman Company, L.P. All rights reserved. Our continuing commitment to quality products may mean a change in specifications without notice. © 2011 • Goodman Company, L.P. • Houston, Texas • Printed in the USA.