Goodman
Air Conditioning & Heating

GMVC8(C) / GCVC8(C)

HEATING INPUT: 60,000–100,000 BTU/H

TWO-STAGE, VARIABLE-SPEED GAS FURNACE 80% AFUE

Contents

Nomenclature 2
Product Specifications 3
Dimensions 5
Airflow Data 7
Accessories 8
Wiring Diagram 10

ComfortBridge™ technology

CoolCloud™

Standard Features

- Integrated communicating ComfortBridge™ technology
- Two-stage gas valve provides quiet, economical heating
- Commissioning and diagnostics via on board Bluetooth with the CoolCloud™ phone and tablet application
- Efficient and quiet variable-speed ECM circulator motor gently ramps up or down according to heating or cooling demand
- SureStart® Silicon Nitride igniter designed for long igniter life
- Self-diagnostic control board with constant memory fault code history output to a triple 7-segment display
- Low constant fan speed circulates air throughout the home
- Quiet, two-speed induced draft blower
- California Low NOx emissions-compliant models available
- Can no longer be installed in California's South Coast Air Quality Management District (SCAQMD) on or after October 1, 2019.
- AHRI Certified; ETL Listed

Cabinet Features

- Fully insulated, heavy-gauge steel cabinet with durable baked-enamel finish
- Multi-position installation:
  GMVC8: upflow, horizontal left or right
  GCVC8: downflow, horizontal left or right
- Removable bottom for side- or bottom-return applications
- Convenient left or right connection for gas/electric service
- Cabinet air leakage ≤ 2%
- Coil and furnace fit flush for most installations

LIFETIME HEAT EXCHANGER LIMITED WARRANTY* | 10 YEAR UNIT REPLACEMENT LIMITED WARRANTY* | 10 YEAR PARTS LIMITED WARRANTY

Intertek | AHRI CERTIFIED® | COMPANY WITH QUALITY SYSTEM CERTIFIED BY DNV GL ISO 9001 | COMPANY WITH ENVIRONMENTAL SYSTEM CERTIFIED BY DNV GL ISO 14001 | BBB ACCREDITED BUSINESS

* Complete warranty details available from your local dealer or at www.goodmanmfg.com. To receive the Lifetime Heat Exchanger Limited Warranty (good for as long as you own your home), 10-Year Unit Replacement Limited Warranty and 10-Year Parts Limited Warranty, online registration must be completed within 60 days of installation. Online registration is not required in California or Québec.

G	M	V	C	80	040	4	C	*	**
1	2	3	4	5,6	7,8,9	10	11	12	13,14

Brand

G- Goodman® Brand

Configuration

M- Upflow/Horizontal

C- Downflow/Horizontal

Motor

V- Variable Speed ECM / ComfortBridge™

E- Multi-Speed ECM S- Single Speed

Gas Valve

M- Modulating S- Single Stage

C- Two Stage H- Convertible Single Phase

AFUE

80- 80% AFUE

MBTU/h

040- 40,000 BTU/h 100- 100,000 BTU/h

060- 60,000 BTU/h 120- 120,000 BTU/h

080- 80,000 BTU/h 140- 140,000 BTU/h

Maximum CFM

2- 800 CFM 4- 1600 CFM

3- 1200 CFM 5- 2000 CFM

Cabinet Width

A- 14" C- 21"

B- 17½" D- 24½"

NOx

N- Natural Gas

X- Low NOx

Engineering

Major /Minor Revisions

* Not used for inventory control.

	GMVC8 0603B*C	GMVC8 0604B*C	GMVC8 0803B*C	GMVC8 0804C*C	GMVC8 0805C*C	GMVC8 0805D*C	GMVC8 1005C*C
HEATING CAPACITY							
High Fire Input (BTU/h)[1]	60,000	60,000	80,000	80,000	80,000	80,000	100,000
High Fire Output (BTU/h)[1] :							
Natural Gas	48,000	48,000	64,000	64,000	64,000	64,000	80,000
LP Gas	48,000	48,000	64,000	64,000	64,000	64,000	80,000
Low Fire Input (BTU/h)[1]	42,000	42,000	56,000	56,000	56,000	56,000	70,000
Low Fire Output (BTU/h)[1] :							
Natural Gas	33,600	33,600	44,800	44,800	44,800	44,800	56,000
LP Gas	33,600	33,600	44,800	44,800	44,800	44,800	56,000
AFUE[2]	80	80	80	80	80	80	80
Available AC @ 0.5” ESP	1.5- 3.0	1.5- 4.0	1.5- 3.0	3.0- 4.0	2.0- 5.0	2.5- 5.0	2.0- 5.0
Temperature Rise Range (° F)	15-45 / 15-45	20-50 / 20-50	30-60 / 35-65	25-55 / 20-50	20-50 / 20-50	20-50 / 30-60	25-55 / 25-55
CIRCULATOR BLOWER							
Size (D x W)	10” x 8”	10” x 8”	10” x 8”	11" x 10"	10” x 10”	11" x 10"	10” x 10”
Horsepower- RPM	1/2	3/4	1/2	1/2	3/4	3/4	3/4
Speed	Variable ECM	Variable ECM	Variable ECM	Variable ECM	Variable ECM	Variable ECM	Variable ECM
Vent Diameter[1]	4”	4”	4”	4”	4”	4”	4”
No. of Burners	3	3	4	4	4	4	5
ELECTRICAL DATA							
Min. Circuit Ampacity[3]	7.75	10.6	7.75	7.75	10.6	10.6	10.6
Max. Overcurrent Device (amps)[4]	15	15	15	15	15	15	15
SHIP WEIGHT (LBS)	105	107	110	118	121	129	124

1 Natural Gas BTU/h; for altitudes above from 0’ to 4,500’ above sea level, reduce input rating 4% for each 1,000’ above 4,500’ altitude. Low-fire rate is 70% of high-fire rate.

2 DOE AFUE based upon Isolated Combustion System (ICS)

3 Minimum Circuit Ampacity = (1.25 x Circulator Blower Amps) + ID Blower amps. Wire size should be determined in accordance with National Electrical Codes. Extensive wire runs will require larger wire sizes.

4 Maximum Overcurrent Protection Device refers to maximum recommended fuse or circuit breaker size. May use fuses or HACR-type circuit breakers of the same size as noted.

NOTES

- All furnaces are manufactured for use on 115 VAC, 60 Hz, single-phase electrical supply.
- Gas Service Connection ½” FPT
- Important: Size fuses and wires properly and make electrical connections in accordance with the National Electrical Code and/or all existing local codes.

	GCVC8 0603B*C	GCVC8 0803B*C	GCVC8 0805C*C	GCVC8 1005C*C
HEATING CAPACITY				
High Fire Input (BTU/h)[1]	60,000	80,000	80,000	100,000
High Fire Output (BTU/h)[1]				
Natural Gas	48,000	64,000	64,000	80,000
LP Gas	48,000	64,000	64,000	80,000
Low Fire Input (BTU/h)[1]	42,000	56,000	56,000	70,000
Low Fire Output (BTU/h)[1]				
Natural Gas	33,600	44,800	44,800	56,000
LP Gas	33,600	44,800	44,800	56,000
AFUE[2]	80	80	80	80
Available AC @ 0.5” ESP	1.5- 3.0	1.5- 3.0	2.0- 5.0	2.0- 5.0
Temperature Rise Range (° F)	25-55 / 40-70	30-60 / 30-60	25-55 / 30-60	20-50 / 25-55
CIRCULATOR BLOWER				
Size (D x W)	10” x 8”	10” x 8”	10” x 10”	10” x 10”
Horsepower- RPM	1/2	1/2	3/4	3/4
Speed	Variable ECM	Variable ECM	Variable ECM	Variable ECM
Vent Diameter[2]	4”	4”	4”	4”
No. of Burners	3	4	4	5
ELECTRICAL DATA				
Min. Circuit Ampacity[3]	7.75	7.75	10.6	10.6
Max. Overcurrent Device (amps)[4]	15	15	15	15
SHIP WEIGHT (LBS)	105	109	125	129

[1] Natural Gas BTU/h; for altitudes above from 0’ to 4,500’ above sea level, reduce input rating 4% for each 1,000’ above 4,500’ altitude. Low-fire rate is 70% of high-fire rate.

[2] DOE AFUE based upon Isolated Combustion System (ICS)

[3] Minimum Circuit Ampacity = (1.25 x Circulator Blower Amps) + ID Blower amps. Wire size should be determined in accordance with National Electrical Codes. Extensive wire runs will require larger wire sizes.

[4] Maximum Overcurrent Protection Device refers to maximum recommended fuse or circuit breaker size. May use fuses or HACR-type circuit breakers of the same size as noted.

NOTES

- All furnaces are manufactured for use on 115 VAC, 60 Hz, single-phase electrical supply.
- Gas Service Connection ½” FPT
- Important: Size fuses and wires properly and make electrical connections in accordance with the National Electrical Code and/or all existing local codes.

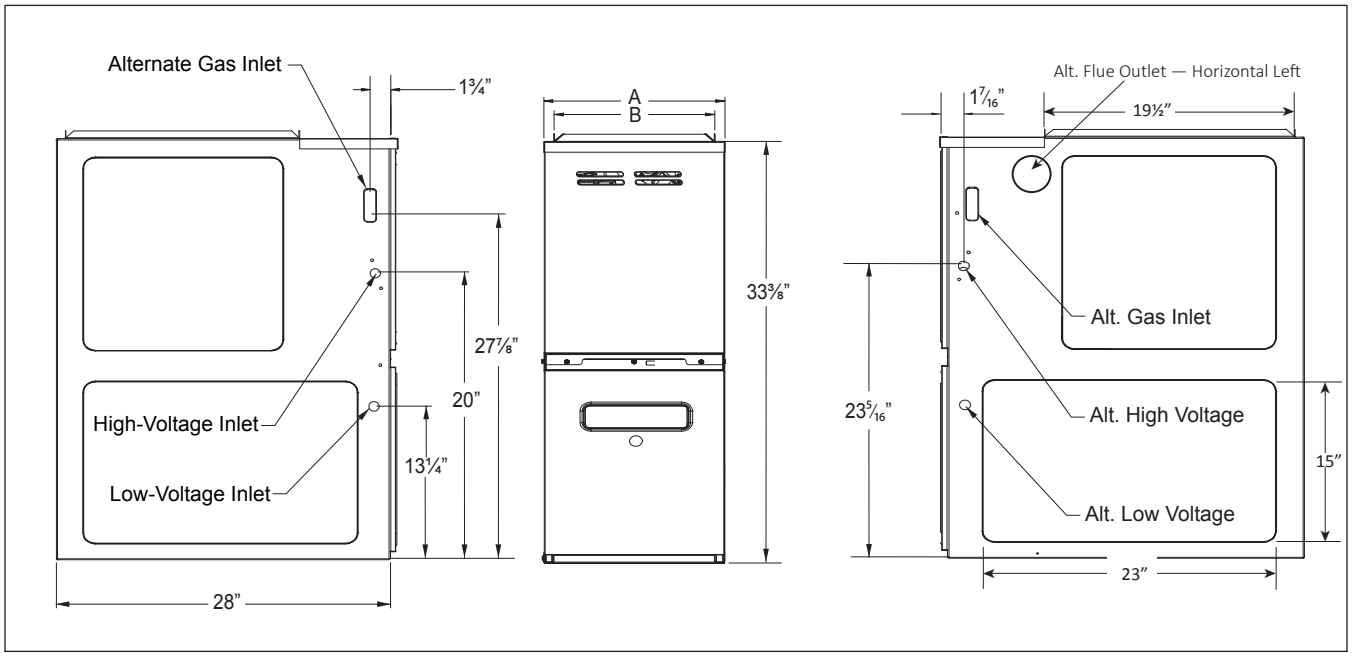

Model	Dimensions			Heights	
	W	D	H	A	B
GMVC80603B**	17½"	28"	33⅜"	17½"	16"
GMVC80604B**	17½"	28"	33⅜"	17½"	16"
GMVC80803B**	17½"	28"	33⅜"	17½"	16"
GMVC80804C**	21"	28"	33⅜"	21"	19½"
GMVC80805C**	21"	28"	33⅜"	21"	19½"
GMVC80805D**	24½"	28"	33⅜"	24½"	23"
GMVC81005C**	21"	28"	33⅜"	21"	19½"

Minimum Clearances to Combustible Materials

Sides	Rear	Front	Bottom	Vent		Top
				SW	B	
1	0	3	C	6	1	1

C = If placed on combustible floor, the floor MUST be wood ONLY.

Notes:

- For servicing or cleaning, a 24" front clearance is recommended.
- Unit connections (electrical, flue, and drain) may necessitate greater clearances than the minimum clearances listed above.
- In all cases, accessibility clearance must take precedence over clearances from the enclosure where accessibility clearances are greater.
- Refer to the appropriate USA and Canadian codes:
  - In the USA: the National Fuel Gas Code NFPA 54 / ANSI Z223.1
  - In Canada: the Canada National Standard of Canada, CAN/CSA B149.1 and CAN/CSA B142.2

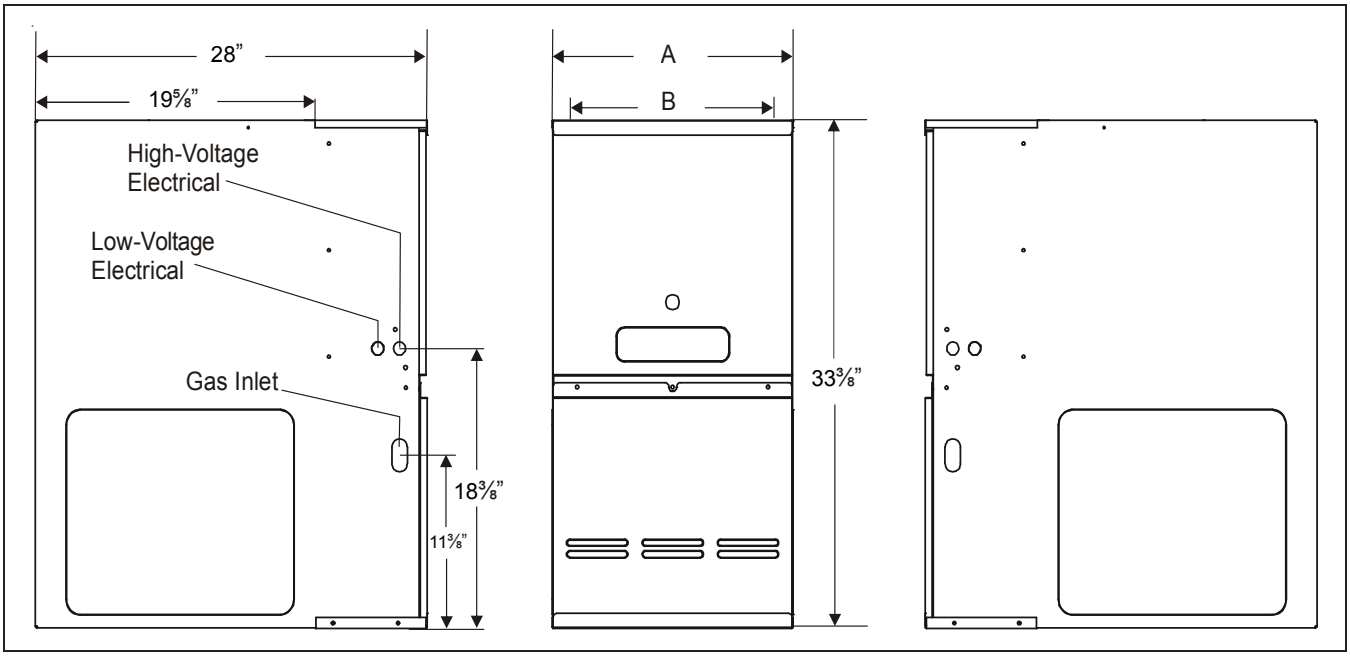

Model	Dimensions			Heights	
	W	D	H	A	B
GCVC80603B**	17½”	28”	33⅜"	17½”	16”
GCVC80803B**	17½”	28”	33⅜"	17½”	16”
GCVC80805C**	21”	28”	33⅜"	21”	19½”
GCVC81005C**	21”	28”	33⅜"	21”	19½”

Minimum Clearances to Combustible Materials

Sides	Rear	Front [1]	Vent [2]		Top
			SW	B	
1	0	3	6	1	1

Approved for line contact in the horizontal position.

[1] 24” clearance for serviceability recommended.

[2] Single Wall Vent (SW) to be used only as a connector. Refer to the venting tables outlined in the Installation Manual for additional venting requirements.

MODEL/TEMP RISE RANGE (MID RISE)	GCVC80603BXC* 25-55 (40)		GCVC80603BXC* 30-60 (45)		GCVC80805CXC* 25-55 (40)		GCVC81005CXC* 20-50 (35)		GMVC80603B*C* 15-45 (30)		GMVC80604B*C* 20-50 (35)	
	CFM	RISE	CFM	RISE	CFM	RISE	CFM	RISE	CFM	RISE	CFM	RISE
Recommended cfm for high heat / expected temperature rise	1100	40	1325	45	1470	40	2090	35	1400	32	1275	35
Lowest recommended cfm for hi heat / expected temperature rise	810	55	990	60	1070	55	1475	50	980	45	890	50
Maximum cfm for hi heat / expected temperature rise	1400	32	1400	42	2200	27	2200	34	1400	32	1760	25

NOTE: Low Heat CFM = High Heat CFM X .7. Low Heat Temperature Rise Is Expected to Equal High Heat Temparatue Rise ± 5% 0140F02402-A

MODEL/TEMP RISE RANGE (MID RISE)	GMVC80803B*C* 30-60 (45)		GMVC80804C*C* 25-55 (40)		GMVC80805C*C* 20-50 (35)		GMVC80805D*C* 20-50 (35)		GMVC81005C*C* 25-55 (40)	
	CFM	RISE	CFM	RISE	CFM	RISE	CFM	RISE	CFM	RISE
Recommended cfm for high heat / expected temperature rise	1330	45	1400	42	1700	35	1700	35	1850	40
Lowest recommended cfm for hi heat / expected temperature rise	980	60	1090	54	1175	50	1175	50	1350	55
Maximum cfm for hi heat / expected temperature rise	1400	42	1760	34	2200	27	2200	27	2200	34

NOTE: Low Heat CFM = High Heat CFM X .7. Low Heat Temperature Rise Is Expected to Equal High Heat Temparatue Rise ± 5% 0140F02402-A

GCVC80603BXC, GCVC80803BXC
GMCV80603B*C, GMVC80803B*C
Cooling Speed
(@ .1" - .8" w.c. ESP)

Tons	High-Stage	Low-Stage CFM
1.5	600	420
2	800	560
2.5	1,000	700
3	1,200	840
MAX	1,400	

GMVC80604B*C
GMVC80804C*C
Cooling Speed
(@ .1" - .8" w.c. ESP)

Tons	High-Stage	Low-Stage CFM
2	800	560
2.5	1,000	700
3	1,200	840
4	1,600	1120
MAX	1,760	

GCVC80805CX*C
GCVC81005C*C
Cooling Speed (@ .1" - .8" w.c. ESP)

Tons	High-Stage	Low-Stage CFM
2	800	560
3	1,200	840
4	1,600	1,120
5	2,000	1,400
MAX	2,000	

GMVC80805C*C, GMVC80805D*C
GMVC81005C*C
Cooling Speed
(@ .1" - .8" w.c. ESP)

Tons	High-Stage	Low-Stage CFM
2	800	560
3	1,200	840
4	1,600	1,120
5	2,000	1,400
MAX	2,200	

All furnaces ship as high speed for cooling. Installer must adjust blower speed as needed.
For most jobs, about 400 CFM per ton when cooling is desirable.
Do not operate above .5" w.c. ESP in heating mode. Operating CFM between .5" and .8" w.c. is tabulated for cooling purposes only.

GCVC Continuous Fan Speeds

Model	Furnace Maximum CFM	Continuous Fan Speed
GCVC80603BXBX	1,400	350-1,400
GCVC80803BXBX	1,400	350-1,400
GCVC80805CXBX	2,200	550-2,200
GCVC81005CXBX	2,200	550-2,200

GCVC8 Minimum Filter Sizes

Model #	GCVC80603BX, GCVC80803BX	GCVC80805CX	GCVC81005CX
Filter Size (in²)	(2) 10 x 20 or (1) 16 x 25 (Top Return)	(2) 14 x 20 or (1) 20 x 25 (Top Return)	

Note: Other size filters of equal or greater surface area may be used; filters may also be centrally located.

[1] Use 2- 16 X 25 filters on side returns or 20 X 25 filter on bottom return if furnace is connected to a cooling unit over 4 tons nominal capacity.

GMVC Continuous Fan Speeds

Model	Furnace Maximum CFM	Continuous Fan Speed
GMVC80603B*C	1400	350- 1400
GMVC80604B*C	1760	440- 1760
GMVC80803B*C	1400	350- 1400
GMVC80804C*C	1760	440- 1760
GMVC80805C*C	2200	550- 2200
GMVC80805D*C	2200	550- 2200
GMVC81005C*C	2200	550- 2200

GMVC8 Minimum Filter Sizes

Model #	GMVC80604B*, GMVC80603B*, GMVC80803B*	GMVC80805C*, GMVC80804C*, GMVC80805D*	GMVC81005C*
Filter Size (in²)	(1) 16 x 25 (Side or Bottom)	(1) 16 x 25 (Side or Bottom) [1]	(2) 16 x 25 (Side) or (1) 20 x 25 (Bottom)

Note: Other size filters of equal or greater surface area may be used; filters may also be centrally located.

[1] Use 2- 16 X 25 filters on side returns or 20 X 25 filter on bottom return if furnace is connected to a cooling unit over 4 tons nominal capacity.

Accessories

Model	Description
LPM-06	LP Conversion Kit (Springs & Orifice) [1]
AM11-1425-FA AM11-1625-FB AM11-2025-FC AM11-2525-FD	Deep Pleated Media Air Cleaner

[1] White-Rodgers and Honeywell valves

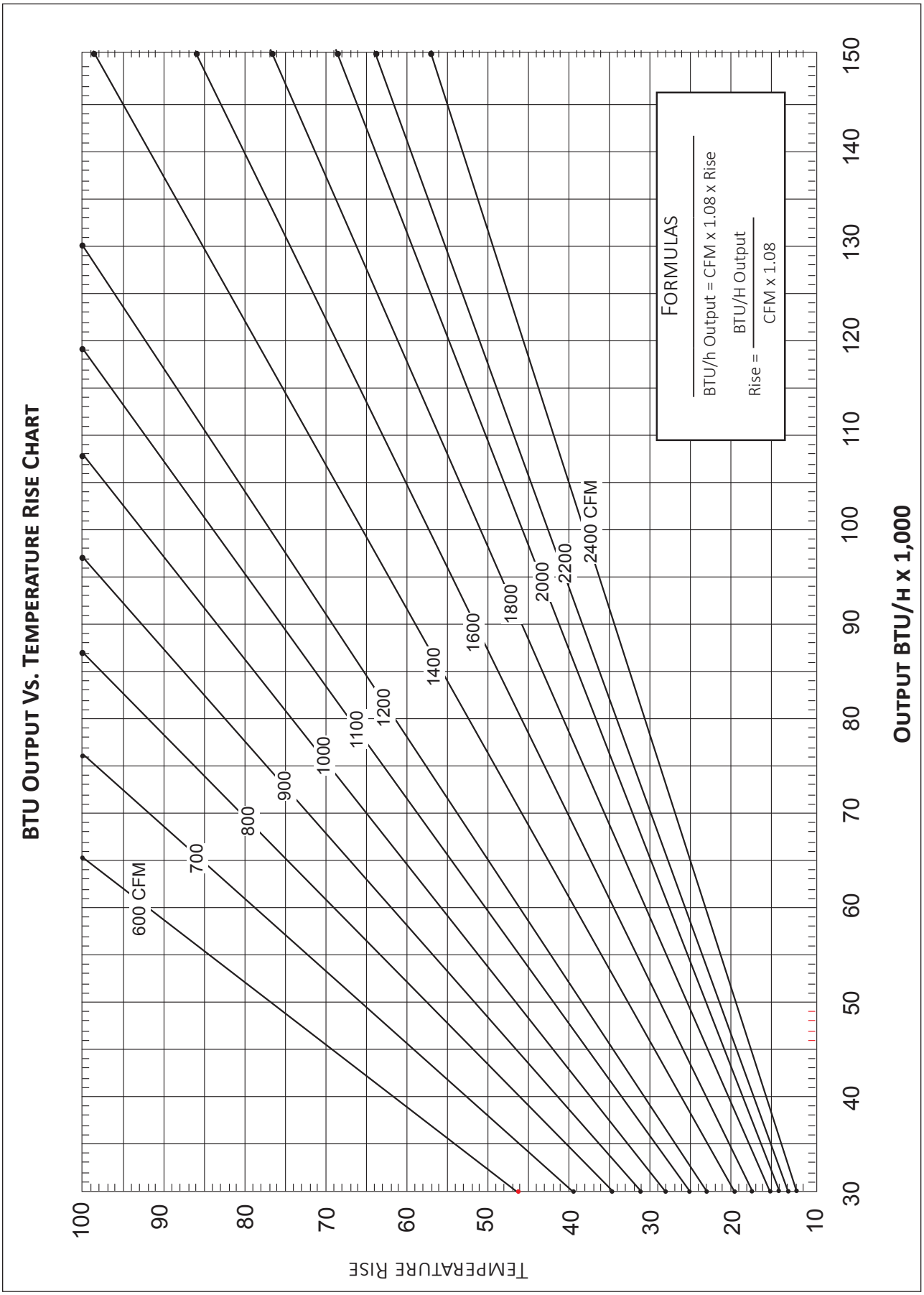
BTU Output Vs. Temperature Rise Chart
Temperature Rise
Output BTU/h x 1,000
600 CFM
700
800
900
1000
1100
1200
1400
1600
1800
2000
2200
2400 CFM
Formulas
BTU/h Output = CFM x 1.08 x Rise
Rise = BTU/H Output / CFM x 1.08

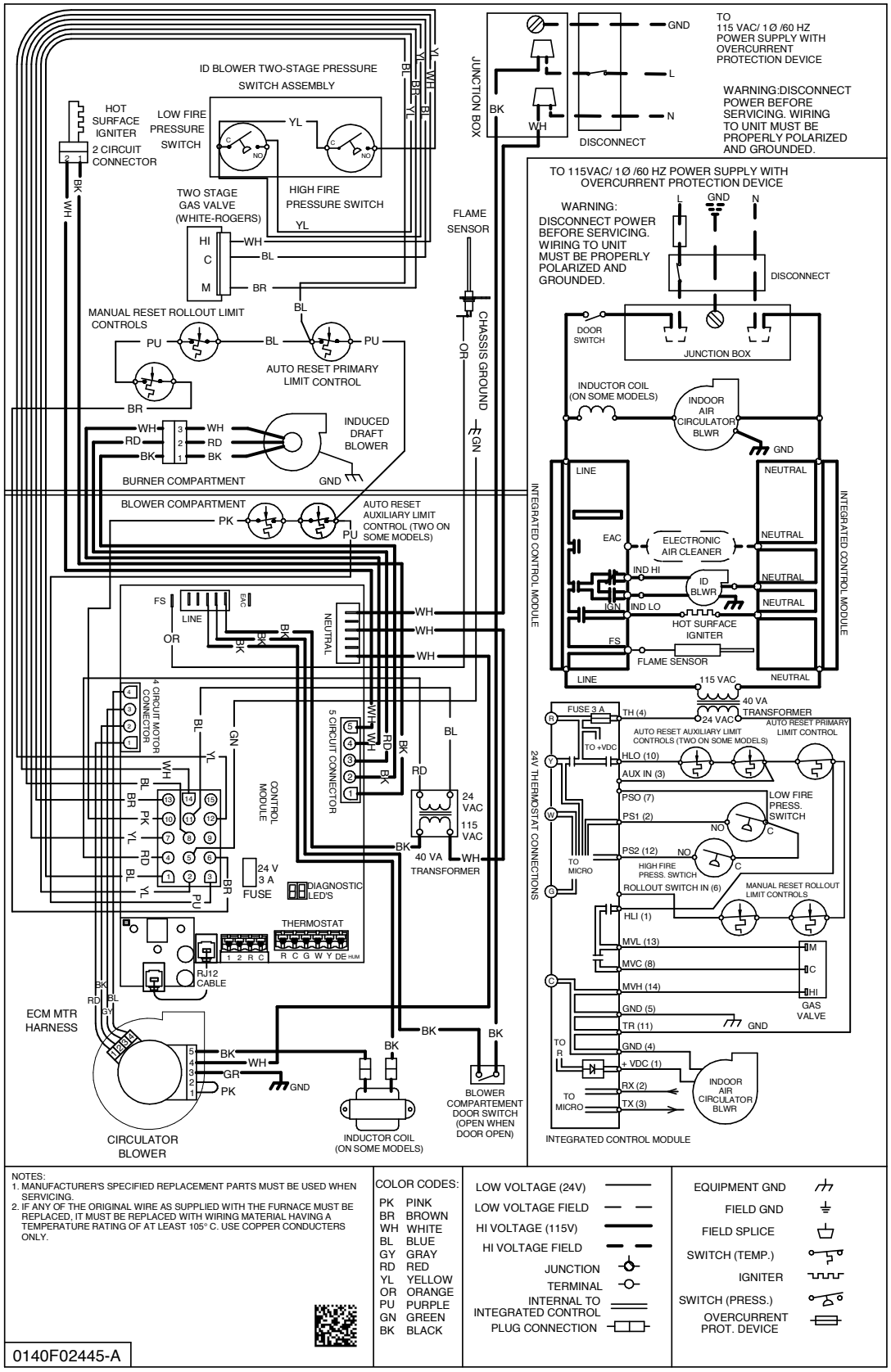

NOTES:
1. MANUFACTURER'S SPECIFIED REPLACEMENT PARTS MUST BE USED WHEN SERVICING.
2. IF ANY OF THE ORIGINAL WIRE AS SUPPLIED WITH THE FURNACE MUST BE REPLACED, IT MUST BE REPLACED WITH WIRING MATERIAL HAVING A TEMPERATURE RATING OF AT LEAST 105° C. USE COPPER CONDUCTERS ONLY.

COLOR CODES:

PK	PINK
BR	BROWN
WH	WHITE
BL	BLUE
GY	GRAY
RD	RED
YL	YELLOW
OR	ORANGE
PU	PURPLE
GN	GREEN
BK	BLACK

LOW VOLTAGE (24V)
LOW VOLTAGE FIELD
HI VOLTAGE (115V)
HI VOLTAGE FIELD
JUNCTION
TERMINAL
INTERNAL TO INTEGRATED CONTROL
PLUG CONNECTION

EQUIPMENT GND
FIELD GND
FIELD SPLICE
SWITCH (TEMP.)
IGNITER
SWITCH (PRESS.)
OVERCURRENT PROT. DEVICE

0140F02445-A

WARNING

High Voltage: Disconnect all power before servicing or installing this unit. Multiple power sources may be present. Failure to do so may cause property damage, personal injury, or death.

Wiring is subject to change. Always refer to the wiring diagram or the unit for the most up-to-date wiring.

Goodman Manufacturing Company, L.P., reserves the right to discontinue, or change at any time, specifications or designs without notice or without incurring obligations. © 2019 • Goodman Manufacturing Company, L.P. • Houston, Texas • Printed in the USA.