Goodman
Air Conditioning & Heating

GLXS3B

Energy-Efficient Classic
R-32 Split System Air Conditioner
Up to 15 SEER2
1½ To 5 Tons

R32

Contents

Nomenclature 2
Product Specifications 3
Expanded Cooling Data 4
Performance Data 18
Dimensions 20
Wiring Diagrams 21
Accessories 23

Standard Features

- Energy-efficient compressor
- Fully charged for 15' of tubing length
- Copper tube/ enhanced aluminum fin coil-5mm diameter
- Factory-installed filter drier
- Sweat connection service valves with easy access to gauge ports
- Enclosed contactor
- High-pressure switch
- Ground lug connection
- Capacitors with extended life
- AHRI Certified
- ETL Listed

Cabinet Features

- Removable grille-style top design compliant with UL 60335-2-40
- Venturi for increased velocity of airflow
- Attractive Architectural Gray powder-paint finish with 500-hour salt-spray approval
- Wire fan discharge grille
- Steel louver coil guard
- Top and side maintenance access
- Single-panel access to controls with space provided for field-installed accessories
- When properly anchored, meets the 2023 Florida Building Code unit integrity requirements for hurricane-type winds (Anchor bracket kits available.)

10 YEAR PARTS LIMITED WARRANTY*

Intertek

AHRI CERTIFIED

COMPANY WITH QUALITY SYSTEM CERTIFIED BY DNV GL = ISO 9001 =

COMPANY WITH ENVIRONMENTAL SYSTEM CERTIFIED BY DNV GL = ISO 14001 =

BBB ACCREDITED BUSINESS

* Complete warranty available from your local dealer or at www.goodmanmfg.com. To receive 10-Year Parts Limited Warranty, online registration must be completed within 60 days of installation. The duration of warranty coverage may depend on the state in which you reside. Some states and provinces do not allow warranty coverage to be conditioned on registration. For a list of states and provinces that do not allow warranty coverage to be conditioned on registration, please visit www.goodmanmfg.com/warranty-information or, to request a paper copy of this information, please call us at 1-855-502-3903. Other limitations and exclusions apply, refer to complete warranty details for full list of limitations and exclusions.

G	L	X	S	3	B	N	36	1	0	A	A
1	2	3	4	5	6	7	8,9	10	11	12	13

BRAND

G - Goodman® Brand

TYPE

L R-32 Splits System

OUTDOOR TYPE

X Condenser

Z Heat Pump

COMPRESSOR TYPE

S Single-Stage
T Two-Stage

EFFICIENCY (SEER2) NOMINAL

13.4 - 13.7 = 3
13.8 - 14.5 = 4
14.6 - 15.9 = 5
16.0-16.9 = 6
17.0-17.9 = 7
18.0-18.9 = 8
19.0+ = 9

MINOR REV

A

MAJOR REVISION

A

Variation

Electrical

1 208/230 V, 1 Phase, 60 Hz

NOMINAL CAPACITY

18 - 1½ Tons
24 - 2 Tons
30 - 2 Tons
36 - 3 Tons
42 - 3½ Tons
48 - 4 Tons
60 - 5 Tons

REGION

N North
S Southeast & North
A All Regions

FEATURE/APPLICATION

B - Standard
M - Multi-Family
C - Communicating (Top Flow)

	GLXS3BN 1810A*	GLXS3BN 2410A*	GLXS3BN 3010A*	GLXS3BN 3610A*	GLXS3BN 4210A*	GLXS3BN 4810A*	GLXS3BN 6010A*
COOLING CAPACITY							
Nominal Cooling (BTU/h)	18,000	24,000	30,000	36,000	42,000	48,000	60,000
Decibels (dBA)	73.0	74.0	74.0	69.0	73.0	71.0	74.0
COMPRESSOR							
RLA	8.2	8.2	11.2	13.4	14.4	19.4	23.9
LRA	41.2	41.2	52.5	83.3	112.2	127.7	148.0
Stage	Single	Single	Single	Single	Single	Single	Single
Type	Rotary	Rotary	Rotary	Scroll	Scroll	Scroll	Scroll
CONDENSER FAN MOTOR							
Motor Type	PSC	PSC	PSC	PSC	PSC	PSC	PSC
Horsepower (RPM)	1/8	1/8	1/8	1/8	1/4	1/4	1/4
FLA	0.70	0.70	0.70	0.70	1.4	1.4	1.3
REFRIGERATION SYSTEM							
Refrigerant Line Size[1]							
Liquid Line Size (“O.D.)	⅜"	⅜"	⅜"	⅜"	⅜"	⅜"	⅜"
Suction Line Size (“O.D.)	¾"	¾"	¾"	⅞"	1⅛"	1⅛"	1⅛"
Refrigerant Connection Size							
Liquid Valve Size (“O.D.)	⅜"	⅜"	⅜"	⅜"	⅜"	⅜"	⅜"
Suction Valve Size (“O.D.) [2]	¾"	¾"	¾"	¾"	⅞"	⅞"	⅞"
Valve Connection Type	Sweat	Sweat	Sweat	Sweat	Sweat	Sweat	Sweat
Refrigerant Charge [3]	53	53	60	60	74	84	91
ELECTRICAL DATA							
Voltage-Phase	208/230-1	208/230-1	208/230-1	208/230-1	208/230-1	208/230-1	208/230-1
Minimum Circuit Ampacity [4]	10.9	10.9	14.7	17.5	19.4	25.6	31.1
Max. Overcurrent Protection [5]	15.0	15.0	25.0	30.0	30.0	45.0	50.0
Min / Max Volts	197/253	197/253	197/253	197/253	197/253	197/253	197/253
Electrical Conduit Size	½" or ¾"	½" or ¾"	½" or ¾"	½" or ¾"	½" or ¾"	½" or ¾"	½" or ¾"
EQUIPMENT WEIGHT (LBS)	114	114	134	136	180	188	229
SHIP WEIGHT (LBS)	129	129	149	151	195	203	244

[1] Line sizes denoted for 25’ line sets, tested and rated in accordance with AHRI Standard 210/240. For other line set lengths or sizes, refer to the Installation Instructions and/or the Long Line Set Applications guide.

[2] Any suction line adapter will need to be supplied by the field.

[3] Unit is factory charged with refrigerant for 15’ of ⅜” liquid line. System charge must be adjusted per the Final Charge Adjustment procedure found in the Installation Instructions.

[4] Wire size should be determined in accordance with National Electrical Codes; extensive wire runs will require larger wire sizes

[5] Must use time-delay fuses or HACR-type circuit breakers of the same size as noted.

NOTES

- Always check the S&R plate for electrical data on the unit being installed.

Expanded Cooling Data — GLXS3BN1810A*+ CAPTA2422A*

			Outdoor Ambient Temperature																							
			65				75				85				95				105				115			
			Entering Indoor Wet Bulb Temperature																							
IDB	Airflow		59	63	67	71	59	63	67	71	59	63	67	71	59	63	67	71	59	63	67	71	59	63	67	71
70	525	MBh	18.3	18.5	19.1	-	18.1	18.3	18.9	-	17.6	17.9	18.4	-	16.8	17.0	17.6	-	15.8	16.0	16.6	-	14.9	15.1	15.7	-
		S/T	0.53	0.46	0.34	-	0.54	0.47	0.34	-	0.56	0.49	0.37	-	0.58	0.51	0.38	-	0.60	0.53	0.40	-	0.64	0.57	0.45	-
		ΔT	23	21	17	-	23	21	17	-	24	22	18	-	23	21	17	-	23	21	17	-	24	22	18	-
		kW	1.19	1.19	1.18	-	1.32	1.31	1.31	-	1.46	1.46	1.46	-	1.61	1.61	1.61	-	1.79	1.79	1.78	-	1.99	1.99	1.99	-
		Amps	4.2	4.2	4.2	-	4.8	4.8	4.8	-	5.4	5.4	5.4	-	6.1	6.1	6.1	-	6.9	6.9	6.9	-	7.9	7.9	7.8	-
	625	MBh	18.6	18.8	19.4	-	18.4	18.6	19.2	-	17.9	18.2	18.7	-	17.1	17.3	17.9	-	16.1	16.3	16.9	-	15.2	15.4	16.0	-
		S/T	0.61	0.54	0.41	-	0.61	0.54	0.42	-	0.63	0.56	0.44	-	0.65	0.58	0.46	-	0.67	0.60	0.48	-	0.72	0.65	0.53	-
		ΔT	22	20	16	-	22	20	16	-	22	20	16	-	22	20	16	-	21	19	15	-	23	21	17	-
		kW	1.20	1.20	1.19	-	1.32	1.32	1.32	-	1.47	1.47	1.46	-	1.62	1.62	1.62	-	1.80	1.79	1.79	-	2.00	2.00	1.99	-
		Amps	4.2	4.2	4.2	-	4.8	4.8	4.8	-	5.5	5.5	5.5	-	6.2	6.2	6.2	-	7.0	7.0	7.0	-	7.9	7.9	7.9	-
	675	MBh	18.7	19.0	19.5	-	18.6	18.8	19.4	-	18.1	18.3	18.9	-	17.3	17.5	18.1	-	16.3	16.5	17.1	-	15.3	15.6	16.1	-
		S/T	0.63	0.56	0.44	-	0.63	0.56	0.44	-	0.66	0.59	0.46	-	0.67	0.60	0.48	-	0.69	0.62	0.50	-	0.74	0.67	0.55	-
		ΔT	21	19	15	-	21	19	15	-	21	19	15	-	21	19	15	-	21	19	15	-	22	20	16	-
		kW	1.20	1.20	1.20	-	1.33	1.33	1.32	-	1.47	1.47	1.47	-	1.63	1.62	1.62	-	1.80	1.80	1.80	-	2.00	2.00	2.00	-
		Amps	4.2	4.2	4.2	-	4.8	4.8	4.8	-	5.5	5.5	5.5	-	6.2	6.2	6.2	-	7.0	7.0	7.0	-	7.9	7.9	7.9	-
75	525	MBh	18.3	18.5	19.1	19.9	18.1	18.4	18.9	19.7	17.6	17.9	18.4	19.3	16.8	17.1	17.6	18.4	15.8	16.1	16.6	17.4	14.9	15.1	15.7	16.5
		S/T	0.65	0.58	0.46	0.3	0.65	0.58	0.46	0.3	0.68	0.61	0.48	0.4	0.69	0.62	0.50	0.4	0.71	0.64	0.52	0.4	1.00	0.69	0.57	0.4
		ΔT	28	26	22	18	28	26	22	18	28	26	22	18	28	26	22	18	28	26	22	18	29	27	23	19
		kW	1.19	1.19	1.18	1.2	1.31	1.31	1.31	1.3	1.46	1.46	1.45	1.5	1.61	1.61	1.61	1.6	1.79	1.78	1.78	1.8	1.99	1.99	1.99	2.0
		Amps	4.2	4.2	4.2	4.2	4.8	4.8	4.8	4.8	5.4	5.4	5.4	5.5	6.1	6.1	6.1	6.2	6.9	6.9	6.9	7.0	7.9	7.9	7.8	7.9
	625	MBh	18.6	18.8	19.4	20.2	18.4	18.7	19.2	20.0	17.9	18.2	18.7	19.6	17.1	**17.4**	17.9	18.7	16.1	16.4	16.9	17.7	15.2	15.4	16.0	16.8
		S/T	0.72	0.65	0.53	0.4	0.73	0.66	0.54	0.4	0.75	0.68	0.56	0.4	0.77	**0.70**	0.58	0.4	1.00	0.72	0.60	0.5	1.00	0.77	0.64	0.5
		ΔT	26	24	20	16	26	24	20	16	27	25	21	16	26	**24**	20	16	26	24	20	16	27	25	21	17
		kW	1.20	1.19	1.19	1.20	1.32	1.32	1.32	1.33	1.47	1.47	1.46	1.47	1.62	**1.62**	1.62	1.63	1.79	1.79	1.79	1.80	2.00	2.00	1.99	2.00
		Amps	4.2	4.2	4.2	4.3	4.8	4.8	4.8	4.8	5.5	5.5	5.5	5.5	6.2	**6.2**	6.2	6.2	7.0	7.0	7.0	7.0	7.9	7.9	7.9	7.9
	675	MBh	18.7	19.0	19.5	20.4	18.6	18.8	19.4	20.2	18.1	18.4	18.9	19.7	17.3	**17.5**	18.1	18.9	16.3	16.5	17.1	17.9	15.4	15.6	16.2	17.0
		S/T	0.74	0.68	0.55	0.4	0.75	0.68	0.56	0.4	0.77	0.70	0.58	0.5	0.79	**0.72**	0.60	0.5	1.00	0.74	0.62	0.5	1.00	0.79	0.67	0.5
		ΔT	26	24	20	16	26	24	20	15	26	24	20	16	26	**24**	20	15	25	23	19	15	27	25	21	16
		kW	1.20	1.20	1.20	1.2	1.33	1.33	1.32	1.3	1.47	1.47	1.47	1.5	1.62	**1.62**	1.62	1.6	1.80	1.80	1.79	1.8	2.00	2.00	2.00	2.0
		Amps	4.2	4.2	4.2	4.3	4.8	4.8	4.8	4.9	5.5	5.5	5.5	5.5	6.2	**6.2**	6.2	6.2	7.0	7.0	7.0	7.0	7.9	7.9	7.9	7.9

IDB: Entering Indoor Dry Bulb Temperature

Shaded area reflects ACCA (TVA) conditions

kW = Total system power

High and low pressures are measured at the liquid and suction service valves.

Amps = outdoor unit amps (comp.+fan)

Expanded Cooling Data — GLXS3BN1810A*+ CAPTA2422A* (cont.)

			Outdoor Ambient Temperature																							
			65				75				85				95				105				115			
			Entering Indoor Wet Bulb Temperature																							
IDB	Airflow		59	63	67	71	59	63	67	71	59	63	67	71	59	63	67	71	59	63	67	71	59	63	67	71
80	525	MBh	18.4	18.6	19.2	20.0	18.2	18.5	19.0	19.8	17.7	18.0	18.5	19.4	16.9	17.2	17.7	18.5	15.9	16.1	16.7	17.5	15.0	15.2	15.8	16.6
		S/T	0.76	0.69	0.57	0.4	0.77	0.70	0.58	0.4	0.79	0.72	0.60	0.5	1.00	0.74	0.62	0.5	1.00	0.76	0.64	0.5	1.00	0.81	0.68	0.6
		ΔT	33	31	27	23	33	31	27	23	33	31	27	23	33	31	27	23	33	30	26	22	34	32	28	24
		kW	1.19	1.19	1.18	1.2	1.32	1.31	1.31	1.3	1.46	1.46	1.46	1.5	1.61	1.61	1.61	1.6	1.79	1.79	1.78	1.8	1.99	1.99	1.99	2.0
		Amps	4.2	4.2	4.2	4.2	4.8	4.8	4.8	4.8	5.4	5.4	5.4	5.5	6.1	6.1	6.1	6.2	6.9	6.9	6.9	7.0	7.9	7.9	7.8	7.9
	625	MBh	18.7	18.9	19.5	20.3	18.5	18.8	19.3	20.1	18.0	18.3	18.8	19.7	17.2	17.5	**18.0**	18.8	16.2	16.4	17.0	17.8	15.3	15.5	16.1	16.9
		S/T	0.84	0.77	0.64	0.5	0.84	0.77	0.65	0.5	1.00	0.80	0.67	0.5	1.00	0.81	**0.69**	0.6	1.00	0.83	0.71	0.6	1.00	0.88	0.76	0.6
		ΔT	31	29	25	21	31	29	25	21	31	29	25	21	31	29	**25**	21	31	29	25	21	32	30	26	22
		kW	1.20	1.19	1.19	1.20	1.32	1.32	1.32	1.33	1.47	1.47	1.46	1.47	1.62	1.62	**1.62**	1.63	1.79	1.79	1.79	1.80	2.00	2.00	1.99	2.00
		Amps	4.2	4.2	4.2	4.3	4.8	4.8	4.8	4.8	5.5	5.5	5.5	5.5	6.2	6.2	**6.2**	6.2	7.0	7.0	7.0	7.0	7.9	7.9	7.9	7.9
	675	MBh	18.8	19.1	19.6	20.5	18.7	18.9	19.5	20.3	18.2	18.5	19.0	19.8	17.4	17.6	18.2	19.0	16.4	16.6	17.2	18.0	15.4	15.7	16.3	17.1
		S/T	0.86	0.79	0.67	0.5	0.86	0.80	0.67	0.5	1.00	0.82	0.69	0.6	1.00	0.84	0.71	0.6	1.00	0.86	0.73	0.6	1.00	0.90	0.78	0.6
		ΔT	30	28	24	20	30	28	24	20	31	29	25	20	30	28	24	20	30	28	24	20	31	29	25	21
		kW	1.20	1.20	1.20	1.2	1.33	1.33	1.32	1.3	1.47	1.47	1.47	1.5	1.63	1.62	1.62	1.6	1.80	1.80	1.80	1.8	2.00	2.00	2.00	2.0
		Amps	4.2	4.2	4.2	4.3	4.8	4.8	4.8	4.9	5.5	5.5	5.5	5.5	6.2	6.2	6.2	6.2	7.0	7.0	7.0	7.0	7.9	7.9	7.9	7.9
85	525	MBh	18.7	18.9	19.5	20.3	18.5	18.8	19.3	20.1	18.0	18.3	18.8	19.7	17.2	17.5	18.0	18.8	16.2	16.5	17.0	17.8	15.3	15.5	16.1	16.9
		S/T	1.00	0.78	0.66	0.5	1.00	0.79	0.67	0.5	1.00	0.81	0.69	0.6	1.00	0.83	0.71	0.6	1.00	0.85	0.73	0.6	1.00	1.00	0.77	0.6
		ΔT	37	35	31	27	37	35	31	27	37	35	31	27	37	35	31	27	37	35	31	26	38	36	32	28
		kW	1.19	1.19	1.19	1.2	1.32	1.32	1.31	1.3	1.46	1.46	1.46	1.5	1.62	1.61	1.61	1.6	1.79	1.79	1.79	1.8	1.99	1.99	1.99	2.0
		Amps	4.2	4.2	4.2	4.2	4.8	4.8	4.8	4.8	5.4	5.4	5.4	5.5	6.2	6.1	6.1	6.2	6.9	6.9	6.9	7.0	7.9	7.9	7.9	7.9
	625	MBh	19.0	19.2	19.8	20.6	18.8	19.1	19.6	20.4	18.3	18.6	19.1	20.0	17.5	17.8	18.3	19.1	16.5	16.8	17.3	18.1	15.6	15.8	16.4	17.2
		S/T	1.00	0.86	0.74	0.6	1.00	0.87	0.74	0.6	1.00	0.89	0.76	0.6	1.00	0.91	0.78	0.7	1.00	1.00	0.80	0.7	1.00	1.00	0.85	0.7
		ΔT	35	33	29	25	35	33	29	25	36	34	30	25	35	33	29	25	35	33	29	25	36	34	30	26
		kW	1.20	1.20	1.20	1.20	1.33	1.33	1.32	1.33	1.47	1.47	1.47	1.48	1.62	1.62	1.62	1.63	1.80	1.80	1.79	1.80	2.00	2.00	2.00	2.01
		Amps	4.2	4.2	4.2	4.3	4.8	4.8	4.8	4.9	5.5	5.5	5.5	5.5	6.2	6.2	6.2	6.2	7.0	7.0	7.0	7.0	7.9	7.9	7.9	7.9
	675	MBh	19.1	19.4	20.0	20.8	19.0	19.2	19.8	20.6	18.5	18.8	19.3	20.1	17.7	17.9	18.5	19.3	16.7	16.9	17.5	18.3	15.8	16.0	16.6	17.4
		S/T	1.00	0.88	0.76	0.6	1.00	0.89	0.76	0.6	1.00	0.91	0.79	0.7	1.00	0.93	0.80	0.7	1.00	1.00	0.82	0.7	1.00	1.00	0.87	0.7
		ΔT	35	33	29	24	35	32	29	24	35	33	29	25	35	32	28	24	34	32	28	24	36	34	30	25
		kW	1.20	1.20	1.20	1.2	1.33	1.33	1.33	1.3	1.47	1.47	1.47	1.5	1.63	1.63	1.62	1.6	1.80	1.80	1.80	1.8	2.00	2.00	2.00	2.0
		Amps	4.3	4.3	4.2	4.3	4.8	4.8	4.8	4.9	5.5	5.5	5.5	5.5	6.2	6.2	6.2	6.2	7.0	7.0	7.0	7.0	7.9	7.9	7.9	8.0

IDB: Entering Indoor Dry Bulb Temperature

Shaded area reflects AHRI conditions

kW = Total system power

High and low pressures are measured at the liquid and suction service valves.

Amps = outdoor unit amps (comp.+fan)

Expanded Cooling Data — GLXS3BN2410A*+ CAPTA2422A*

			Outdoor Ambient Temperature																							
			65				75				85				95				105				115			
			Entering Indoor Wet Bulb Temperature																							
IDB	Airflow		59	63	67	71	59	63	67	71	59	63	67	71	59	63	67	71	59	63	67	71	59	63	67	71
70	700	MBh	23.7	24.0	24.7	-	23.5	23.8	24.5	-	22.9	23.2	23.9	-	21.8	22.2	22.9	-	20.6	20.9	21.6	-	19.4	19.7	20.4	-
		S/T	0.63	0.56	0.43	-	0.64	0.57	0.44	-	0.66	0.59	0.46	-	0.68	0.61	0.48	-	0.70	0.63	0.50	-	0.75	0.68	0.55	-
		ΔT	21	19	15	-	21	19	15	-	21	19	15	-	21	19	15	-	20	18	15	-	22	20	16	-
		kW	1.50	1.50	1.50	-	1.67	1.67	1.67	-	1.87	1.86	1.86	-	2.07	2.07	2.07	-	2.31	2.30	2.30	-	2.58	2.58	2.57	-
		Amps	5.5	5.5	5.4	-	6.2	6.2	6.2	-	7.1	7.1	7.1	-	8.1	8.1	8.1	-	9.1	9.1	9.1	-	10.4	10.4	10.4	-
	800	MBh	24.1	24.5	25.2	-	23.9	24.3	25.0	-	23.3	23.6	24.3	-	22.3	22.6	23.3	-	21.0	21.3	22.0	-	19.8	20.1	20.8	-
		S/T	0.67	0.59	0.47	-	0.67	0.60	0.47	-	0.70	0.62	0.50	-	0.71	0.64	0.51	-	0.74	0.66	0.53	-	1.00	0.71	0.58	-
		ΔT	20	18	14	-	20	17	14	-	20	18	14	-	20	17	14	-	19	17	13	-	21	18	15	-
		kW	1.51	1.51	1.51	-	1.68	1.68	1.68	-	1.87	1.87	1.87	-	2.08	2.08	2.08	-	2.31	2.31	2.31	-	2.59	2.59	2.58	-
		Amps	5.5	5.5	5.5	-	6.3	6.3	6.3	-	7.2	7.2	7.1	-	8.1	8.1	8.1	-	9.2	9.2	9.2	-	10.4	10.4	10.4	-
	900	MBh	24.7	25.0	25.7	-	24.5	24.8	25.5	-	23.8	24.2	24.9	-	22.8	23.1	23.8	-	21.5	21.8	22.5	-	20.3	20.7	21.4	-
		S/T	0.67	0.60	0.47	-	0.68	0.61	0.48	-	0.70	0.63	0.50	-	0.72	0.65	0.52	-	0.74	0.67	0.54	-	1.00	0.72	0.59	-
		ΔT	19	17	13	-	18	16	13	-	19	17	13	-	18	16	13	-	18	16	12	-	19	17	14	-
		kW	1.52	1.52	1.51	-	1.69	1.69	1.69	-	1.88	1.88	1.88	-	2.09	2.09	2.09	-	2.32	2.32	2.32	-	2.59	2.59	2.59	-
		Amps	5.5	5.5	5.5	-	6.3	6.3	6.3	-	7.2	7.2	7.2	-	8.1	8.1	8.1	-	9.2	9.2	9.2	-	10.5	10.5	10.4	-
75	700	MBh	23.7	24.1	24.8	25.8	23.5	23.8	24.5	25.6	22.9	23.2	23.9	25.0	21.8	**22.2**	22.9	23.9	20.6	20.9	21.6	22.7	19.4	19.7	20.4	21.5
		S/T	0.75	0.68	0.55	0.4	0.76	0.69	0.56	0.4	0.78	0.71	0.58	0.4	0.80	**0.73**	0.60	0.5	1.00	0.75	0.62	0.5	1.00	0.80	0.67	0.5
		ΔT	25	23	19	15	25	23	19	15	25	23	20	16	25	**23**	19	15	25	23	19	15	26	24	20	16
		kW	1.50	1.50	1.50	1.5	1.67	1.67	1.67	1.7	1.86	1.86	1.86	1.9	2.07	**2.07**	2.07	2.1	2.30	2.30	2.30	2.3	2.58	2.58	2.57	2.6
		Amps	5.5	5.4	5.4	5.5	6.2	6.2	6.2	6.3	7.1	7.1	7.1	7.2	8.1	**8.1**	8.1	8.1	9.1	9.1	9.1	9.2	10.4	10.4	10.4	10.4
	800	MBh	24.1	24.5	25.2	26.2	23.9	24.3	25.0	26.0	23.3	23.7	24.4	25.4	22.3	22.6	23.3	24.4	21.0	21.3	22.0	23.1	19.8	20.1	20.8	21.9
		S/T	0.79	0.72	0.59	0.5	0.79	0.72	0.59	0.5	0.82	0.75	0.62	0.5	1.00	0.76	0.64	0.5	1.00	0.79	0.66	0.5	1.00	0.83	0.71	0.6
		ΔT	24	22	18	14	24	22	18	14	24	22	18	15	24	22	18	14	24	22	18	14	25	23	19	15
		kW	1.51	1.51	1.50	1.52	1.68	1.68	1.68	1.69	1.87	1.87	1.87	1.88	2.08	2.08	2.08	2.09	2.31	2.31	2.31	2.32	2.59	2.58	2.58	2.59
		Amps	5.5	5.5	5.5	5.5	6.3	6.3	6.3	6.3	7.2	7.2	7.1	7.2	8.1	8.1	8.1	8.2	9.2	9.2	9.2	9.2	10.4	10.4	10.4	10.5
	900	MBh	24.7	25.0	25.7	26.8	24.5	24.8	25.5	26.6	23.9	24.2	24.9	26.0	22.8	**23.1**	23.8	24.9	21.5	21.8	22.5	23.6	20.3	20.7	21.4	22.4
		S/T	0.80	0.72	0.60	0.5	0.80	0.73	0.60	0.5	0.83	0.75	0.63	0.5	1.00	**0.77**	0.64	0.5	1.00	0.79	0.66	0.5	1.00	0.84	0.71	0.6
		ΔT	23	21	17	13	23	21	17	13	23	21	17	13	23	**21**	17	13	23	21	17	13	24	22	18	14
		kW	1.52	1.52	1.51	1.5	1.69	1.69	1.68	1.7	1.88	1.88	1.88	1.9	2.09	**2.09**	2.08	2.1	2.32	2.32	2.32	2.3	2.59	2.59	2.59	2.6
		Amps	5.5	5.5	5.5	5.6	6.3	6.3	6.3	6.4	7.2	7.2	7.2	7.2	8.1	**8.1**	8.1	8.2	9.2	9.2	9.2	9.2	10.5	10.4	10.4	10.5

IDB: Entering Indoor Dry Bulb Temperature

Shaded area reflects ACCA (TVA) conditions

kW = Total system power

High and low pressures are measured at the liquid and suction service valves.

Amps = outdoor unit amps (comp.+fan)

Expanded Cooling Data — GLXS3BN2410A+ CAPTA2422A* (cont.)*

			Outdoor Ambient Temperature																							
			65				75				85				95				105				115			
			Entering Indoor Wet Bulb Temperature																							
IDB	Airflow		59	63	67	71	59	63	67	71	59	63	67	71	59	63	67	71	59	63	67	71	59	63	67	71
80	700	MBh	23.8	24.2	24.9	25.9	23.6	24.0	24.7	25.7	23.0	23.4	24.1	25.1	22.0	22.3	**23.0**	24.1	20.7	21.0	21.7	22.8	19.5	19.8	20.5	21.6
		S/T	0.87	0.80	0.67	0.5	0.88	0.81	0.68	0.5	1.00	0.83	0.70	0.6	1.00	0.85	**0.72**	0.6	1.00	0.87	0.74	0.6	1.00	0.92	0.79	0.7
		ΔT	30	28	24	20	30	28	24	20	30	28	24	20	30	28	**24**	20	29	27	24	20	31	29	25	21
		kW	1.50	1.50	1.50	1.5	1.67	1.67	1.67	1.7	1.87	1.86	1.86	1.9	2.07	2.07	**2.07**	2.1	2.31	2.30	2.30	2.3	2.58	2.58	2.57	2.6
		Amps	5.5	5.5	5.4	5.5	6.2	6.2	6.2	6.3	7.1	7.1	7.1	7.2	8.1	8.1	**8.1**	8.1	9.1	9.1	9.1	9.2	10.4	10.4	10.4	10.4
	800	MBh	24.3	24.6	25.3	26.4	24.1	24.4	25.1	26.2	23.4	23.8	24.5	25.5	22.4	22.7	23.4	24.5	21.1	21.4	22.1	23.2	19.9	20.3	21.0	22.0
		S/T	0.91	0.84	0.71	0.6	1.00	0.84	0.71	0.6	1.00	0.87	0.74	0.6	1.00	0.88	0.76	0.6	1.00	0.90	0.78	0.6	1.00	1.00	0.82	0.7
		ΔT	29	27	23	19	28	26	23	19	29	27	23	19	28	26	23	19	28	26	22	18	29	27	24	20
		kW	1.51	1.51	1.51	1.52	1.68	1.68	1.68	1.69	1.87	1.87	1.87	1.88	2.08	2.08	2.08	2.09	2.31	2.31	2.31	2.32	2.59	2.59	2.58	2.60
		Amps	5.5	5.5	5.5	5.5	6.3	6.3	6.3	6.3	7.2	7.2	7.1	7.2	8.1	8.1	8.1	8.2	9.2	9.2	9.2	9.2	10.4	10.4	10.4	10.5
	900	MBh	24.8	25.1	25.8	26.9	24.6	24.9	25.6	26.7	24.0	24.3	25.0	26.1	22.9	23.3	24.0	25.0	21.6	22.0	22.7	23.7	20.5	20.8	21.5	22.6
		S/T	0.92	0.84	0.71	0.6	1.00	0.85	0.72	0.6	1.00	0.87	0.74	0.6	1.00	0.89	0.76	0.6	1.00	0.91	0.78	0.6	1.00	1.00	0.83	0.7
		ΔT	28	25	22	18	27	25	22	18	28	26	22	18	27	25	22	18	27	25	21	17	28	26	23	19
		kW	1.52	1.52	1.51	1.5	1.69	1.69	1.69	1.7	1.88	1.88	1.88	1.9	2.09	2.09	2.08	2.1	2.32	2.32	2.32	2.3	2.59	2.59	2.59	2.6
		Amps	5.5	5.5	5.5	5.6	6.3	6.3	6.3	6.4	7.2	7.2	7.2	7.2	8.1	8.1	8.1	8.2	9.2	9.2	9.2	9.3	10.5	10.5	10.4	10.5
85	700	MBh	24.2	24.6	25.3	26.3	24.0	24.4	25.1	26.1	23.4	23.7	24.4	25.5	22.4	**22.7**	23.4	24.5	21.1	21.4	22.1	23.2	19.9	20.2	20.9	22.0
		S/T	1.00	0.90	0.77	0.6	1.00	0.90	0.77	0.6	1.00	0.93	0.80	0.7	1.00	**0.94**	0.82	0.7	1.00	1.00	0.84	0.7	1.00	1.00	0.89	0.8
		ΔT	34	32	28	24	34	32	28	24	34	32	28	24	34	**32**	28	24	33	31	28	24	35	33	29	25
		kW	1.50	1.50	1.50	1.5	1.68	1.68	1.67	1.7	1.87	1.87	1.86	1.9	2.08	**2.08**	2.07	2.1	2.31	2.31	2.30	2.3	2.58	2.58	2.58	2.6
		Amps	5.5	5.5	5.5	5.5	6.3	6.3	6.2	6.3	7.1	7.1	7.1	7.2	8.1	**8.1**	8.1	8.1	9.2	9.1	9.1	9.2	10.4	10.4	10.4	10.4
	800	MBh	24.7	25.0	25.7	26.8	24.5	24.8	25.5	26.6	23.8	24.2	24.9	25.9	22.8	23.1	23.8	24.9	21.5	21.8	22.5	23.6	20.3	20.7	21.4	22.4
		S/T	1.00	0.93	0.80	0.7	1.00	0.94	0.81	0.7	1.00	0.96	0.83	0.7	1.00	1.00	0.85	0.7	1.00	1.00	0.87	0.7	1.00	1.00	0.92	0.8
		ΔT	33	31	27	23	32	30	27	23	33	31	27	23	32	30	27	23	32	30	26	22	33	31	28	24
		kW	1.51	1.51	1.51	1.52	1.69	1.68	1.68	1.69	1.88	1.88	1.87	1.89	2.09	2.08	2.08	2.09	2.32	2.32	2.31	2.33	2.59	2.59	2.59	2.60
		Amps	5.5	5.5	5.5	5.6	6.3	6.3	6.3	6.3	7.2	7.2	7.2	7.2	8.1	8.1	8.1	8.2	9.2	9.2	9.2	9.2	10.4	10.4	10.4	10.5
	900	MBh	25.2	25.5	26.2	27.3	25.0	25.3	26.0	27.1	24.4	24.7	25.4	26.5	23.3	**23.6**	24.3	25.4	22.0	22.4	23.1	24.1	20.9	21.2	21.9	23.0
		S/T	1.00	0.94	0.81	0.7	1.00	0.94	0.82	0.7	1.00	0.97	0.84	0.7	1.00	**1.00**	0.86	0.7	1.00	1.00	0.88	0.7	1.00	1.00	0.93	0.8
		ΔT	32	29	26	22	31	29	26	22	32	30	26	22	31	**29**	26	22	31	29	25	21	32	30	27	23
		kW	1.52	1.52	1.52	1.5	1.69	1.69	1.69	1.7	1.88	1.88	1.88	1.9	2.09	**2.09**	2.09	2.1	2.32	2.32	2.32	2.3	2.60	2.60	2.59	2.6
		Amps	5.5	5.5	5.5	5.6	6.3	6.3	6.3	6.4	7.2	7.2	7.2	7.3	8.2	**8.2**	8.1	8.2	9.2	9.2	9.2	9.3	10.5	10.5	10.5	10.5

IDB: Entering Indoor Dry Bulb Temperature

Shaded area reflects AHRI conditions

kW = Total system power

High and low pressures are measured at the liquid and suction service valves.

Amps = outdoor unit amps (comp.+fan)

Expanded Cooling Data — GLXS3BN3010A*+ CAPTA3026A*

			Outdoor Ambient Temperature																							
			65				75				85				95				105				115			
			Entering Indoor Wet Bulb Temperature																							
IDB	Airflow		59	63	67	71	59	63	67	71	59	63	67	71	59	63	67	71	59	63	67	71	59	63	67	71
70	875	MBh	29.2	29.6	30.5	-	29.0	29.4	30.2	-	28.2	28.6	29.5	-	26.9	27.3	28.2	-	25.3	25.7	26.6	-	23.8	24.3	25.1	-
		S/T	0.62	0.54	0.41	-	0.62	0.55	0.42	-	0.65	0.57	0.44	-	0.67	0.59	0.46	-	0.69	0.61	0.48	-	0.74	0.66	0.53	-
		ΔT	20	19	15	-	20	19	15	-	21	19	15	-	20	18	15	-	20	18	15	-	21	19	16	-
		kW	1.82	1.82	1.82	-	2.05	2.05	2.04	-	2.30	2.30	2.29	-	2.57	2.57	2.57	-	2.88	2.88	2.87	-	3.23	3.23	3.23	-
		Amps	6.9	6.9	6.9	-	8.0	8.0	7.9	-	9.1	9.1	9.1	-	10.4	10.4	10.3	-	11.8	11.7	11.7	-	13.4	13.4	13.4	-
	950	MBh	29.5	29.9	30.8	-	29.2	29.6	30.5	-	28.5	28.9	29.7	-	27.2	27.6	28.4	-	25.6	26.0	26.8	-	24.1	24.5	25.4	-
		S/T	0.65	0.58	0.44	-	0.66	0.58	0.45	-	0.68	0.61	0.47	-	0.70	0.62	0.49	-	0.72	0.65	0.51	-	0.77	0.70	0.56	-
		ΔT	20	18	14	-	20	18	14	-	20	18	14	-	20	18	14	-	19	18	14	-	21	19	15	-
		kW	1.83	1.83	1.82	-	2.06	2.05	2.05	-	2.31	2.31	2.30	-	2.58	2.58	2.57	-	2.88	2.88	2.88	-	3.24	3.24	3.24	-
		Amps	7.0	7.0	6.9	-	8.0	8.0	8.0	-	9.1	9.1	9.1	-	10.4	10.4	10.4	-	11.8	11.8	11.8	-	13.4	13.4	13.4	-
	1125	MBh	30.2	30.6	31.5	-	29.9	30.3	31.2	-	29.2	29.6	30.4	-	27.9	28.3	29.1	-	26.3	26.7	27.5	-	24.8	25.2	26.1	-
		S/T	0.69	0.62	0.48	-	0.70	0.62	0.49	-	0.72	0.65	0.51	-	0.74	0.67	0.53	-	0.76	0.69	0.55	-	1.00	0.74	0.60	-
		ΔT	18	16	13	-	18	16	13	-	19	17	13	-	18	16	13	-	18	16	12	-	19	17	14	-
		kW	1.84	1.84	1.84	-	2.07	2.07	2.06	-	2.32	2.32	2.32	-	2.59	2.59	2.59	-	2.90	2.90	2.89	-	3.26	3.25	3.25	-
		Amps	7.0	7.0	7.0	-	8.1	8.1	8.0	-	9.2	9.2	9.2	-	10.5	10.4	10.4	-	11.8	11.8	11.8	-	13.5	13.5	13.5	-
75	875	MBh	29.2	29.7	30.5	31.9	29.0	29.4	30.3	31.6	28.2	28.6	29.5	30.8	26.9	27.3	28.2	29.5	25.3	25.7	26.6	27.9	23.9	24.3	25.1	26.5
		S/T	0.74	0.67	0.54	0.4	0.75	0.67	0.54	0.4	0.77	0.70	0.57	0.4	0.79	0.72	0.58	0.4	1.00	0.74	0.61	0.5	1.00	0.79	0.66	0.5
		ΔT	25	23	19	15	25	23	19	15	25	23	19	16	25	23	19	15	24	22	19	15	26	24	20	16
		kW	1.82	1.82	1.82	1.8	2.05	2.05	2.04	2.1	2.30	2.30	2.29	2.3	2.57	2.57	2.57	2.6	2.88	2.87	2.87	2.9	3.23	3.23	3.23	3.2
		Amps	6.9	6.9	6.9	7.0	8.0	7.9	7.9	8.0	9.1	9.1	9.1	9.2	10.4	10.3	10.3	10.4	11.7	11.7	11.7	11.8	13.4	13.4	13.4	13.4
	950	MBh	29.5	29.9	30.8	32.1	29.2	29.6	30.5	31.8	28.5	28.9	29.8	31.1	27.2	**27.6**	28.4	29.8	25.6	26.0	26.9	28.2	24.1	24.5	25.4	26.7
		S/T	0.78	0.70	0.57	0.4	0.78	0.71	0.57	0.4	0.81	0.73	0.60	0.5	0.82	**0.75**	0.62	0.5	1.00	0.77	0.64	0.5	1.00	0.82	0.69	0.6
		ΔT	24	22	18	15	24	22	18	15	24	22	19	15	24	**22**	18	15	24	22	18	14	25	23	19	16
		kW	1.83	1.83	1.82	1.84	2.05	2.05	2.05	2.07	2.31	2.30	2.30	2.32	2.58	**2.58**	2.57	2.59	2.88	2.88	2.88	2.89	3.24	3.24	3.23	3.25
		Amps	7.0	6.9	6.9	7.0	8.0	8.0	8.0	8.0	9.1	9.1	9.1	9.2	10.4	**10.4**	10.4	10.4	11.8	11.8	11.8	11.8	13.4	13.4	13.4	13.5
	1125	MBh	30.2	30.6	31.5	32.8	29.9	30.4	31.2	32.6	29.2	29.6	30.5	31.8	27.9	**28.3**	29.2	30.5	26.3	26.7	27.6	28.9	24.8	25.2	26.1	27.4
		S/T	0.82	0.74	0.61	0.5	0.82	0.75	0.62	0.5	0.85	0.77	0.64	0.5	1.00	**0.79**	0.66	0.5	1.00	0.81	0.68	0.5	1.00	0.86	0.73	0.6
		ΔT	23	21	17	13	23	21	17	13	23	21	17	14	23	**21**	17	13	22	20	17	13	24	22	18	14
		kW	1.84	1.84	1.84	1.9	2.07	2.07	2.06	2.1	2.32	2.32	2.31	2.3	2.59	**2.59**	2.59	2.6	2.90	2.89	2.89	2.9	3.25	3.25	3.25	3.3
		Amps	7.0	7.0	7.0	7.1	8.1	8.0	8.0	8.1	9.2	9.2	9.2	9.3	10.5	**10.4**	10.4	10.5	11.8	11.8	11.8	11.9	13.5	13.5	13.5	13.5

IDB: Entering Indoor Dry Bulb Temperature

Shaded area reflects ACCA (TVA) conditions

kW = Total system power

High and low pressures are measured at the liquid and suction service valves.

Amps = outdoor unit amps (comp.+fan)

EXPANDED COOLING DATA — GLXS3BN3010A*+ CAPTA3026A* (CONT.)

			Outdoor Ambient Temperature																							
			65				75				85				95				105				115			
			Entering Indoor Wet Bulb Temperature																							
IDB	Airflow		59	63	67	71	59	63	67	71	59	63	67	71	59	63	67	71	59	63	67	71	59	63	67	71
80	875	MBh	29.4	29.8	30.7	32.0	29.1	29.5	30.4	31.7	28.4	28.8	29.7	31.0	27.1	27.5	28.4	29.7	25.5	25.9	26.8	28.1	24.0	24.4	25.3	26.6
		S/T	0.86	0.79	0.66	0.5	0.87	0.80	0.66	0.5	1.00	0.82	0.69	0.5	1.00	0.84	0.71	0.6	1.00	0.86	0.73	0.6	1.00	0.91	0.78	0.6
		ΔT	29	27	23	20	29	27	23	20	29	27	24	20	29	27	23	20	29	27	23	19	30	28	24	21
		kW	1.82	1.82	1.82	1.8	2.05	2.05	2.04	2.1	2.30	2.30	2.29	2.3	2.57	2.57	2.57	2.6	2.88	2.87	2.87	2.9	3.23	3.23	3.23	3.2
		Amps	6.9	6.9	6.9	7.0	8.0	8.0	7.9	8.0	9.1	9.1	9.1	9.2	10.4	10.4	10.3	10.4	11.8	11.7	11.7	11.8	13.4	13.4	13.4	13.4
	950	MBh	29.6	30.1	30.9	32.3	29.4	29.8	30.7	32.0	28.6	29.0	29.9	31.2	27.3	27.7	**28.6**	29.9	25.7	26.1	27.0	28.3	24.3	24.7	25.5	26.9
		S/T	0.90	0.82	0.69	0.6	0.90	0.83	0.70	0.6	1.00	0.85	0.72	0.6	1.00	0.87	**0.74**	0.6	1.00	0.89	0.76	0.6	1.00	0.94	0.81	0.7
		ΔT	28	26	23	19	28	26	23	19	29	27	23	19	28	26	**23**	19	28	26	22	19	29	27	24	20
		kW	1.83	1.83	1.82	1.84	2.06	2.05	2.05	2.07	2.31	2.31	2.30	2.32	2.58	2.58	**2.57**	2.59	2.88	2.88	2.88	2.90	3.24	3.24	3.24	3.25
		Amps	7.0	7.0	6.9	7.0	8.0	8.0	8.0	8.0	9.1	9.1	9.1	9.2	10.4	10.4	**10.4**	10.4	11.8	11.8	11.8	11.8	13.4	13.4	13.4	13.5
	1125	MBh	30.4	30.8	31.6	33.0	30.1	30.5	31.4	32.7	29.3	29.7	30.6	31.9	28.0	28.4	29.3	30.6	26.4	26.8	27.7	29.0	25.0	25.4	26.3	27.6
		S/T	0.94	0.86	0.73	0.6	1.00	0.87	0.74	0.6	1.00	0.89	0.76	0.6	1.00	0.91	0.78	0.6	1.00	0.94	0.80	0.7	1.00	1.00	0.85	0.7
		ΔT	27	25	21	18	27	25	21	18	27	25	22	18	27	25	21	18	27	25	21	17	28	26	22	19
		kW	1.84	1.84	1.84	1.9	2.07	2.07	2.06	2.1	2.32	2.32	2.32	2.3	2.59	2.59	2.59	2.6	2.90	2.90	2.89	2.9	3.25	3.25	3.25	3.3
		Amps	7.0	7.0	7.0	7.1	8.1	8.0	8.0	8.1	9.2	9.2	9.2	9.3	10.5	10.4	10.4	10.5	11.8	11.8	11.8	11.9	13.5	13.5	13.5	13.5
85	875	MBh	29.9	30.3	31.2	32.5	29.6	30.0	30.9	32.2	28.9	29.3	30.1	31.5	27.6	28.0	28.8	30.2	26.0	26.4	27.2	28.6	24.5	24.9	25.8	27.1
		S/T	1.00	0.89	0.76	0.6	1.00	0.89	0.76	0.6	1.00	0.92	0.79	0.6	1.00	0.94	0.81	0.7	1.00	1.00	0.83	0.7	1.00	1.00	0.88	0.7
		ΔT	33	31	27	24	33	31	27	23	33	31	28	24	33	31	27	23	33	31	27	23	34	32	28	24
		kW	1.83	1.83	1.82	1.8	2.05	2.05	2.05	2.1	2.30	2.30	2.30	2.3	2.58	2.57	2.57	2.6	2.88	2.88	2.88	2.9	3.24	3.24	3.23	3.2
		Amps	6.9	6.9	6.9	7.0	8.0	8.0	8.0	8.0	9.1	9.1	9.1	9.2	10.4	10.4	10.4	10.4	11.8	11.8	11.7	11.8	13.4	13.4	13.4	13.5
	950	MBh	30.1	30.5	31.4	32.7	29.9	30.3	31.2	32.5	29.1	29.5	30.4	31.7	27.8	28.2	29.1	30.4	26.2	26.6	27.5	28.8	24.8	25.2	26.0	27.4
		S/T	1.00	0.92	0.79	0.7	1.00	0.93	0.80	0.7	1.00	0.95	0.82	0.7	1.00	0.97	0.84	0.7	1.00	1.00	0.86	0.7	1.00	1.00	0.91	0.8
		ΔT	32	30	27	23	32	30	27	23	32	30	27	23	32	30	27	23	32	30	26	23	33	31	27	24
		kW	1.83	1.83	1.83	1.85	2.06	2.06	2.05	2.07	2.31	2.31	2.31	2.32	2.58	2.58	2.58	2.60	2.89	2.89	2.88	2.90	3.25	3.24	3.24	3.26
		Amps	7.0	7.0	7.0	7.0	8.0	8.0	8.0	8.1	9.2	9.2	9.1	9.2	10.4	10.4	10.4	10.5	11.8	11.8	11.8	11.9	13.4	13.4	13.4	13.5
	1125	MBh	30.8	31.3	32.1	33.5	30.6	31.0	31.9	33.2	29.8	30.2	31.1	32.4	28.5	28.9	29.8	31.1	26.9	27.3	28.2	29.5	25.5	25.9	26.7	28.1
		S/T	1.00	0.96	0.83	0.7	1.00	0.97	0.84	0.7	1.00	0.99	0.86	0.7	1.00	1.00	0.88	0.7	1.00	1.00	0.90	0.8	1.00	1.00	0.95	0.8
		ΔT	31	29	25	21	31	29	25	21	31	29	25	22	31	29	25	21	30	28	25	21	32	30	26	22
		kW	1.85	1.85	1.84	1.9	2.07	2.07	2.07	2.1	2.33	2.32	2.32	2.3	2.60	2.60	2.59	2.6	2.90	2.90	2.90	2.9	3.26	3.26	3.25	3.3
		Amps	7.0	7.0	7.0	7.1	8.1	8.1	8.1	8.1	9.2	9.2	9.2	9.3	10.5	10.5	10.4	10.5	11.9	11.9	11.8	11.9	13.5	13.5	13.5	13.6

IDB: Entering Indoor Dry Bulb Temperature

Shaded area reflects AHRI conditions

kW = Total system power

High and low pressures are measured at the liquid and suction service valves.

Amps = outdoor unit amps (comp.+fan)

Expanded Cooling Data — GLXS3BN3610A*+ CAPTA3626A*

			Outdoor Ambient Temperature																							
			65				75				85				95				105				115			
			Entering Indoor Wet Bulb Temperature																							
IDB	Airflow		59	63	67	71	59	63	67	71	59	63	67	71	59	63	67	71	59	63	67	71	59	63	67	71
70	1050	MBh	34.9	35.4	36.5	-	34.6	35.1	36.1	-	33.7	34.2	35.2	-	32.1	32.6	33.7	-	30.2	30.7	31.8	-	28.5	29.0	30.0	-
		S/T	0.63	0.55	0.42	-	0.64	0.56	0.42	-	0.66	0.58	0.45	-	1.00	0.60	0.47	-	1.00	0.63	0.49	-	1.00	0.68	0.54	-
		ΔT	20	18	15	-	20	18	15	-	20	18	15	-	20	18	15	-	20	18	14	-	21	19	15	-
		kW	2.19	2.19	2.19	-	2.46	2.46	2.45	-	2.75	2.75	2.75	-	3.08	3.07	3.07	-	3.43	3.43	3.43	-	3.85	3.85	3.85	-
		Amps	8.0	8.0	8.0	-	9.2	9.2	9.2	-	10.6	10.6	10.6	-	12.1	12.0	12.0	-	13.7	13.7	13.7	-	15.6	15.6	15.6	-
	1150	MBh	35.3	35.7	36.8	-	34.9	35.4	36.5	-	34.0	34.5	35.6	-	32.5	33.0	34.0	-	30.6	31.0	32.1	-	28.8	29.3	30.3	-
		S/T	0.67	0.59	0.46	-	0.67	0.60	0.46	-	1.00	0.62	0.49	-	1.00	0.64	0.51	-	1.00	0.66	0.53	-	1.00	0.72	0.58	-
		ΔT	19	17	14	-	19	17	14	-	19	18	14	-	19	17	14	-	19	17	14	-	20	18	15	-
		kW	2.20	2.20	2.20	-	2.47	2.47	2.46	-	2.76	2.76	2.76	-	3.08	3.08	3.08	-	3.44	3.44	3.44	-	3.86	3.86	3.86	-
		Amps	8.1	8.1	8.0	-	9.3	9.3	9.2	-	10.6	10.6	10.6	-	12.1	12.1	12.1	-	13.7	13.7	13.7	-	15.7	15.6	15.6	-
	1350	MBh	36.0	36.5	37.6	-	35.7	36.2	37.3	-	34.8	35.3	36.4	-	33.3	33.8	34.8	-	31.4	31.8	32.9	-	29.6	30.1	31.1	-
		S/T	0.71	0.63	0.50	-	0.72	0.64	0.50	-	1.00	0.66	0.53	-	1.00	0.68	0.55	-	1.00	0.71	0.57	-	1.00	1.00	0.62	-
		ΔT	18	16	13	-	18	16	12	-	18	16	13	-	18	16	12	-	18	16	12	-	19	17	13	-
		kW	2.22	2.22	2.21	-	2.48	2.48	2.48	-	2.78	2.78	2.77	-	3.10	3.10	3.09	-	3.46	3.46	3.45	-	3.88	3.88	3.87	-
		Amps	8.1	8.1	8.1	-	9.4	9.3	9.3	-	10.7	10.7	10.7	-	12.2	12.2	12.1	-	13.8	13.8	13.8	-	15.7	15.7	15.7	-
75	1050	MBh	34.9	35.4	36.5	38.1	34.6	35.1	36.2	37.8	33.7	34.2	35.3	36.8	32.2	32.7	33.7	35.3	30.3	30.7	31.8	33.4	28.5	29.0	30.0	31.6
		S/T	0.76	0.68	0.55	0.4	1.00	0.69	0.55	0.4	1.00	0.71	0.58	0.4	1.00	0.73	0.60	0.5	1.00	1.00	0.62	0.5	1.00	1.00	0.67	0.5
		ΔT	24	22	19	15	24	22	19	15	24	23	19	15	24	22	19	15	24	22	18	15	25	23	20	16
		kW	2.19	2.19	2.19	2.2	2.46	2.46	2.45	2.5	2.75	2.75	2.75	2.8	3.07	3.07	3.07	3.1	3.43	3.43	3.42	3.4	3.85	3.85	3.84	3.9
		Amps	8.0	8.0	8.0	8.1	9.2	9.2	9.2	9.3	10.6	10.6	10.6	10.6	12.0	12.0	12.0	12.1	13.7	13.7	13.7	13.7	15.6	15.6	15.6	15.7
	1150	MBh	35.3	35.8	36.8	38.4	35.0	35.5	36.5	38.1	34.1	34.5	35.6	37.2	32.5	**33.0**	34.0	35.6	30.6	31.1	32.1	33.7	28.8	29.3	30.4	32.0
		S/T	0.80	0.72	0.58	0.4	1.00	0.73	0.59	0.4	1.00	0.75	0.62	0.5	1.00	**0.77**	0.64	0.5	1.00	1.00	0.66	0.5	1.00	1.00	0.71	0.6
		ΔT	23	22	18	14	23	21	18	14	24	22	18	15	23	**21**	18	14	23	21	18	14	24	22	19	15
		kW	2.20	2.20	2.20	2.22	2.47	2.46	2.46	2.48	2.76	2.76	2.76	2.78	3.08	**3.08**	3.08	3.10	3.44	3.44	3.43	3.45	3.86	3.86	3.85	3.87
		Amps	8.1	8.0	8.0	8.1	9.3	9.3	9.2	9.3	10.6	10.6	10.6	10.7	12.1	**12.1**	12.1	12.2	13.7	13.7	13.7	13.8	15.6	15.6	15.6	15.7
	1350	MBh	36.1	36.6	37.6	39.2	35.8	36.2	37.3	38.9	34.8	35.3	36.4	38.0	33.3	**33.8**	34.8	36.4	31.4	31.9	32.9	34.5	29.6	30.1	31.2	32.7
		S/T	0.84	0.76	0.63	0.5	1.00	0.77	0.63	0.5	1.00	0.79	0.66	0.5	1.00	**0.81**	0.68	0.5	1.00	1.00	0.70	0.6	1.00	1.00	0.75	0.6
		ΔT	22	20	17	13	22	20	17	13	22	20	17	13	22	**20**	17	13	22	20	16	13	23	21	18	14
		kW	2.22	2.22	2.21	2.2	2.48	2.48	2.48	2.5	2.78	2.78	2.77	2.8	3.10	**3.10**	3.09	3.1	3.46	3.45	3.45	3.5	3.88	3.87	3.87	3.9
		Amps	8.1	8.1	8.1	8.2	9.3	9.3	9.3	9.4	10.7	10.7	10.7	10.8	12.2	**12.2**	12.1	12.2	13.8	13.8	13.8	13.9	15.7	15.7	15.7	15.8

IDB: Entering Indoor Dry Bulb Temperature

Shaded area reflects ACCA (TVA) conditions

kW = Total system power

High and low pressures are measured at the liquid and suction service valves.

Amps = outdoor unit amps (comp.+fan)

Expanded Cooling Data — GLXS3BN3610A+ CAPTA3626A* (cont.)*

			Outdoor Ambient Temperature																							
			65				75				85				95				105				115			
			Entering Indoor Wet Bulb Temperature																							
IDB	Airflow		59	63	67	71	59	63	67	71	59	63	67	71	59	63	67	71	59	63	67	71	59	63	67	71
80	1050	MBh	35.1	35.6	36.7	38.2	34.8	35.3	36.3	37.9	33.9	34.4	35.4	37.0	32.3	32.8	33.9	35.5	30.4	30.9	32.0	33.6	28.7	29.2	30.2	31.8
		S/T	1.00	0.81	0.67	0.5	1.00	0.81	0.68	0.5	1.00	0.84	0.70	0.6	1.00	1.00	0.72	0.6	1.00	1.00	0.74	0.6	1.00	1.00	0.80	0.7
		ΔT	28	26	23	19	28	26	23	19	29	27	23	20	28	26	23	19	28	26	23	19	29	27	24	20
		kW	2.19	2.19	2.19	2.2	2.46	2.46	2.45	2.5	2.75	2.75	2.75	2.8	3.07	3.07	3.07	3.1	3.43	3.43	3.43	3.4	3.85	3.85	3.85	3.9
		Amps	8.0	8.0	8.0	8.1	9.2	9.2	9.2	9.3	10.6	10.6	10.6	10.7	12.1	12.0	12.0	12.1	13.7	13.7	13.7	13.8	15.6	15.6	15.6	15.7
	1150	MBh	35.5	35.9	37.0	38.6	35.1	35.6	36.7	38.3	34.2	34.7	35.8	37.4	32.7	33.2	**34.2**	35.8	30.8	31.2	32.3	33.9	29.0	29.5	30.5	32.1
		S/T	1.00	0.85	0.71	0.6	1.00	0.85	0.72	0.6	1.00	1.00	0.74	0.6	1.00	1.00	**0.76**	0.6	1.00	1.00	0.78	0.6	1.00	1.00	1.00	0.7
		ΔT	28	26	22	19	28	26	22	18	28	26	22	19	28	26	**22**	18	27	25	22	18	28	27	23	19
		kW	2.20	2.20	2.20	2.22	2.47	2.47	2.46	2.48	2.76	2.76	2.76	2.78	3.08	3.08	**3.08**	3.10	3.44	3.44	3.44	3.46	3.86	3.86	3.85	3.88
		Amps	8.1	8.1	8.0	8.1	9.3	9.3	9.2	9.3	10.6	10.6	10.6	10.7	12.1	12.1	**12.1**	12.2	13.7	13.7	13.7	13.8	15.7	15.6	15.6	15.7
	1350	MBh	36.2	36.7	37.8	39.4	35.9	36.4	37.5	39.1	35.0	35.5	36.6	38.1	33.5	34.0	35.0	36.6	31.6	32.0	33.1	34.7	29.8	30.3	31.3	32.9
		S/T	1.00	0.89	0.75	0.6	1.00	0.89	0.76	0.6	1.00	1.00	0.78	0.6	1.00	1.00	0.80	0.7	1.00	1.00	0.82	0.7	1.00	1.00	1.00	0.7
		ΔT	26	24	21	17	26	24	21	17	27	25	21	17	26	24	21	17	26	24	21	17	27	25	22	18
		kW	2.22	2.22	2.21	2.2	2.48	2.48	2.48	2.5	2.78	2.78	2.77	2.8	3.10	3.10	3.09	3.1	3.46	3.46	3.45	3.5	3.88	3.88	3.87	3.9
		Amps	8.1	8.1	8.1	8.2	9.3	9.3	9.3	9.4	10.7	10.7	10.7	10.8	12.2	12.2	12.1	12.2	13.8	13.8	13.8	13.9	15.7	15.7	15.7	15.8
85	1050	MBh	35.7	36.2	37.2	38.8	35.4	35.9	36.9	38.5	34.5	35.0	36.0	37.6	32.9	33.4	34.5	36.0	31.0	31.5	32.5	34.1	29.3	29.8	30.8	32.4
		S/T	1.00	0.91	0.77	0.6	1.00	1.00	0.78	0.6	1.00	1.00	0.80	0.7	1.00	1.00	0.82	0.7	1.00	1.00	1.00	0.7	1.00	1.00	1.00	0.8
		ΔT	32	30	27	23	32	30	27	23	32	30	27	23	32	30	27	23	32	30	26	23	33	31	28	24
		kW	2.20	2.20	2.19	2.2	2.46	2.46	2.46	2.5	2.76	2.76	2.75	2.8	3.08	3.08	3.07	3.1	3.44	3.44	3.43	3.5	3.86	3.86	3.85	3.9
		Amps	8.0	8.0	8.0	8.1	9.3	9.2	9.2	9.3	10.6	10.6	10.6	10.7	12.1	12.1	12.0	12.1	13.7	13.7	13.7	13.8	15.6	15.6	15.6	15.7
	1150	MBh	36.0	36.5	37.6	39.2	35.7	36.2	37.3	38.8	34.8	35.3	36.3	37.9	33.3	33.7	34.8	36.4	31.3	31.8	32.9	34.5	29.6	30.1	31.1	32.7
		S/T	1.00	0.95	0.81	0.7	1.00	1.00	0.82	0.7	1.00	1.00	0.84	0.7	1.00	1.00	0.86	0.7	1.00	1.00	1.00	0.7	1.00	1.00	1.00	0.8
		ΔT	31	29	26	22	31	29	26	22	32	30	26	22	31	29	26	22	31	29	26	22	32	30	27	23
		kW	2.21	2.21	2.20	2.22	2.47	2.47	2.47	2.49	2.77	2.77	2.76	2.78	3.09	3.09	3.08	3.10	3.45	3.44	3.44	3.46	3.87	3.86	3.86	3.88
		Amps	8.1	8.1	8.1	8.1	9.3	9.3	9.3	9.4	10.7	10.6	10.6	10.7	12.1	12.1	12.1	12.2	13.8	13.7	13.7	13.8	15.7	15.7	15.6	15.7
	1350	MBh	36.8	37.3	38.4	39.9	36.5	37.0	38.1	39.6	35.6	36.1	37.1	38.7	34.0	34.5	35.6	37.2	32.1	32.6	33.7	35.3	30.4	30.9	31.9	33.5
		S/T	1.00	1.00	0.85	0.7	1.00	1.00	0.86	0.7	1.00	1.00	0.88	0.7	1.00	1.00	1.00	0.8	1.00	1.00	1.00	0.8	1.00	1.00	1.00	0.8
		ΔT	30	28	25	21	30	28	25	21	30	28	25	21	30	28	25	21	30	28	24	21	31	29	25	22
		kW	2.22	2.22	2.22	2.2	2.49	2.49	2.48	2.5	2.78	2.78	2.78	2.8	3.10	3.10	3.10	3.1	3.46	3.46	3.46	3.5	3.88	3.88	3.88	3.9
		Amps	8.2	8.1	8.1	8.2	9.4	9.4	9.3	9.4	10.7	10.7	10.7	10.8	12.2	12.2	12.2	12.3	13.8	13.8	13.8	13.9	15.7	15.7	15.7	15.8

IDB: Entering Indoor Dry Bulb Temperature

Shaded area reflects AHRI conditions

kW = Total system power

High and low pressures are measured at the liquid and suction service valves.

Amps = outdoor unit amps (comp.+fan)

Expanded Cooling Data — GLXS3BN4210A*+ CAPTA4230A*

			Outdoor Ambient Temperature																							
			65				75				85				95				105				115			
			Entering Indoor Wet Bulb Temperature																							
IDB	Airflow		59	63	67	71	59	63	67	71	59	63	67	71	59	63	67	71	59	63	67	71	59	63	67	71
70	1225	MBh	40.3	40.8	42.0	-	39.9	40.5	41.7	-	38.9	39.4	40.6	-	37.1	37.6	38.8	-	34.9	35.4	36.6	-	32.8	33.4	34.6	-
		S/T	0.62	0.54	0.41	-	0.62	0.55	0.41	-	0.65	0.57	0.44	-	0.67	0.59	0.46	-	1.00	0.61	0.48	-	1.00	0.67	0.53	-
		ΔT	20	18	15	-	20	18	14	-	20	18	15	-	20	18	14	-	20	18	14	-	21	19	15	-
		kW	2.61	2.61	2.61	-	2.89	2.89	2.89	-	3.21	3.21	3.20	-	3.55	3.55	3.54	-	3.93	3.92	3.92	-	4.37	4.37	4.37	-
		Amps	9.2	9.2	9.2	-	10.5	10.5	10.5	-	11.9	11.9	11.9	-	13.5	13.5	13.5	-	15.2	15.2	15.2	-	17.3	17.2	17.2	-
	1365	MBh	40.7	41.3	42.5	-	40.4	40.9	42.1	-	39.3	39.9	41.1	-	37.5	38.1	39.3	-	35.3	35.9	37.1	-	33.3	33.8	35.0	-
		S/T	0.67	0.59	0.45	-	0.67	0.60	0.46	-	0.70	0.62	0.48	-	1.00	0.64	0.50	-	1.00	0.66	0.53	-	1.00	0.71	0.58	-
		ΔT	19	17	14	-	19	17	14	-	19	17	14	-	19	17	14	-	19	17	13	-	20	18	14	-
		kW	2.63	2.62	2.62	-	2.91	2.90	2.90	-	3.22	3.22	3.21	-	3.56	3.56	3.55	-	3.94	3.94	3.93	-	4.38	4.38	4.38	-
		Amps	9.3	9.2	9.2	-	10.5	10.5	10.5	-	12.0	12.0	11.9	-	13.5	13.5	13.5	-	15.3	15.3	15.2	-	17.3	17.3	17.3	-
	1575	MBh	41.5	42.1	43.3	-	41.2	41.7	42.9	-	40.1	40.7	41.9	-	38.3	38.9	40.1	-	36.1	36.7	37.9	-	34.1	34.6	35.8	-
		S/T	0.70	0.63	0.49	-	0.71	0.63	0.50	-	0.73	0.66	0.52	-	1.00	0.68	0.54	-	1.00	0.70	0.56	-	1.00	0.75	0.62	-
		ΔT	18	16	12	-	18	16	12	-	18	16	13	-	18	16	12	-	17	16	12	-	19	17	13	-
		kW	2.64	2.64	2.63	-	2.92	2.92	2.91	-	3.23	3.23	3.23	-	3.57	3.57	3.57	-	3.95	3.95	3.95	-	4.40	4.40	4.39	-
		Amps	9.3	9.3	9.3	-	10.6	10.6	10.6	-	12.0	12.0	12.0	-	13.6	13.6	13.6	-	15.3	15.3	15.3	-	17.4	17.4	17.3	-
75	1225	MBh	40.3	40.9	42.1	43.9	39.9	40.5	41.7	43.5	38.9	39.5	40.7	42.5	37.1	37.7	38.9	40.7	34.9	35.4	36.6	38.5	32.9	33.4	34.6	36.5
		S/T	0.75	0.67	0.54	0.4	0.75	0.68	0.54	0.4	1.00	0.70	0.57	0.4	1.00	0.72	0.59	0.4	1.00	0.74	0.61	0.5	1.00	1.00	0.66	0.5
		ΔT	24	22	19	15	24	22	19	15	24	22	19	15	24	22	19	15	24	22	18	15	25	23	19	16
		kW	2.61	2.61	2.60	2.6	2.89	2.89	2.89	2.9	3.21	3.20	3.20	3.2	3.55	3.54	3.54	3.6	3.93	3.92	3.92	3.9	4.37	4.37	4.36	4.4
		Amps	9.2	9.2	9.2	9.3	10.5	10.5	10.5	10.6	11.9	11.9	11.9	12.0	13.5	13.5	13.4	13.5	15.2	15.2	15.2	15.3	17.2	17.2	17.2	17.3
	1365	MBh	40.7	41.3	42.5	44.3	40.4	40.9	42.1	44.0	39.3	39.9	41.1	42.9	37.5	**38.1**	39.3	41.1	35.3	35.9	37.1	38.9	33.3	33.9	35.1	36.9
		S/T	0.79	0.72	0.58	0.4	0.80	0.72	0.59	0.4	1.00	0.75	0.61	0.5	1.00	**0.77**	0.63	0.5	1.00	0.79	0.66	0.5	1.00	1.00	0.71	0.6
		ΔT	23	21	18	14	23	21	18	14	23	21	18	14	23	**21**	18	14	23	21	17	14	24	22	19	15
		kW	2.62	2.62	2.62	2.64	2.90	2.90	2.90	2.92	3.22	3.22	3.21	3.23	3.56	**3.56**	3.55	3.57	3.94	3.93	3.93	3.95	4.38	4.38	4.38	4.40
		Amps	9.3	9.2	9.2	9.3	10.5	10.5	10.5	10.6	12.0	12.0	11.9	12.0	13.5	**13.5**	13.5	13.6	15.3	15.3	15.2	15.3	17.3	17.3	17.3	17.4
	1575	MBh	41.5	42.1	43.3	45.1	41.2	41.7	42.9	44.8	40.1	40.7	41.9	43.7	38.3	38.9	40.1	41.9	36.1	36.7	37.9	39.7	34.1	34.7	35.9	37.7
		S/T	0.83	0.76	0.62	0.5	1.00	0.76	0.63	0.5	1.00	0.79	0.65	0.5	1.00	0.81	0.67	0.5	1.00	0.83	0.69	0.6	1.00	1.00	0.75	0.6
		ΔT	22	20	17	13	22	20	17	13	22	20	17	13	22	20	17	13	22	20	16	13	23	21	17	14
		kW	2.64	2.64	2.63	2.7	2.92	2.92	2.91	2.9	3.23	3.23	3.23	3.2	3.57	3.57	3.57	3.6	3.95	3.95	3.94	4.0	4.40	4.39	4.39	4.4
		Amps	9.3	9.3	9.3	9.4	10.6	10.6	10.6	10.7	12.0	12.0	12.0	12.1	13.6	13.6	13.6	13.7	15.3	15.3	15.3	15.4	17.4	17.4	17.3	17.4

IDB: Entering Indoor Dry Bulb Temperature

Shaded area reflects ACCA (TVA) conditions

kW = Total system power

High and low pressures are measured at the liquid and suction service valves.

Amps = outdoor unit amps (comp.+fan)

EXPANDED COOLING DATA — GLXS3BN4210A*+ CAPTA4230A* (CONT.)

			Outdoor Ambient Temperature																							
			65				75				85				95				105				115			
			Entering Indoor Wet Bulb Temperature																							
IDB	Airflow		59	63	67	71	59	63	67	71	59	63	67	71	59	63	67	71	59	63	67	71	59	63	67	71
80	1225	MBh	40.5	41.1	42.3	44.1	40.1	40.7	41.9	43.7	39.1	39.7	40.9	42.7	37.3	37.9	39.1	40.9	35.1	35.7	36.9	38.7	33.1	33.6	34.8	36.7
		S/T	1.00	0.80	0.66	0.5	1.00	0.80	0.67	0.5	1.00	0.83	0.69	0.5	1.00	0.85	0.71	0.6	1.00	1.00	0.73	0.6	1.00	1.00	0.79	0.6
		ΔT	28	26	23	19	28	26	23	19	28	26	23	19	28	26	23	19	28	26	22	19	29	27	24	20
		kW	2.61	2.61	2.61	2.6	2.89	2.89	2.89	2.9	3.21	3.21	3.20	3.2	3.55	3.55	3.54	3.6	3.93	3.92	3.92	3.9	4.37	4.37	4.36	4.4
		Amps	9.2	9.2	9.2	9.3	10.5	10.5	10.5	10.6	11.9	11.9	11.9	12.0	13.5	13.5	13.4	13.5	15.2	15.2	15.2	15.3	17.3	17.2	17.2	17.3
	1365	MBh	40.9	41.5	42.7	44.5	40.6	41.2	42.4	44.2	39.5	40.1	41.3	43.1	37.7	38.3	**39.5**	41.3	35.5	36.1	37.3	39.1	33.5	34.1	35.3	37.1
		S/T	1.00	0.84	0.71	0.6	1.00	0.85	0.71	0.6	1.00	0.87	0.74	0.6	1.00	1.00	**0.76**	0.6	1.00	1.00	0.78	0.6	1.00	1.00	0.83	0.7
		ΔT	27	25	22	18	27	25	22	18	27	26	22	18	27	25	**22**	18	27	25	22	18	28	26	23	19
		kW	2.62	2.62	2.62	2.64	2.91	2.90	2.90	2.92	3.22	3.22	3.21	3.23	3.56	3.56	**3.55**	3.57	3.94	3.94	3.93	3.95	4.38	4.38	4.38	4.40
		Amps	9.3	9.2	9.2	9.3	10.5	10.5	10.5	10.6	12.0	12.0	11.9	12.0	13.5	13.5	**13.5**	13.6	15.3	15.3	15.2	15.3	17.3	17.3	17.3	17.4
	1575	MBh	41.7	42.3	43.5	45.3	41.4	42.0	43.2	45.0	40.3	40.9	42.1	43.9	38.5	39.1	40.3	42.1	36.3	36.9	38.1	39.9	34.3	34.9	36.1	37.9
		S/T	1.00	0.88	0.75	0.6	1.00	0.89	0.75	0.6	1.00	0.91	0.78	0.6	1.00	1.00	0.80	0.7	1.00	1.00	0.82	0.7	1.00	1.00	0.87	0.7
		ΔT	26	24	21	17	26	24	21	17	26	24	21	17	26	24	21	17	26	24	20	17	27	25	22	18
		kW	2.64	2.64	2.63	2.7	2.92	2.92	2.91	2.9	3.23	3.23	3.23	3.2	3.57	3.57	3.57	3.6	3.95	3.95	3.95	4.0	4.40	4.40	4.39	4.4
		Amps	9.3	9.3	9.3	9.4	10.6	10.6	10.6	10.7	12.0	12.0	12.0	12.1	13.6	13.6	13.6	13.7	15.3	15.3	15.3	15.4	17.4	17.4	17.3	17.4
85	1225	MBh	41.2	41.8	43.0	44.8	40.8	41.4	42.6	44.4	39.8	40.3	41.5	43.4	38.0	**38.5**	39.7	41.6	35.8	36.3	37.5	39.4	33.7	34.3	35.5	37.3
		S/T	1.00	0.90	0.76	0.6	1.00	0.90	0.77	0.6	1.00	1.00	0.79	0.7	1.00	**1.00**	0.81	0.7	1.00	1.00	0.83	0.7	1.00	1.00	1.00	0.7
		ΔT	32	30	26	23	32	30	26	23	32	30	27	23	32	**30**	26	23	31	30	26	22	33	31	27	24
		kW	2.62	2.62	2.61	2.6	2.90	2.90	2.89	2.9	3.21	3.21	3.21	3.2	3.55	**3.55**	3.55	3.6	3.93	3.93	3.93	3.9	4.38	4.38	4.37	4.4
		Amps	9.2	9.2	9.2	9.3	10.5	10.5	10.5	10.6	12.0	11.9	11.9	12.0	13.5	**13.5**	13.5	13.6	15.2	15.2	15.2	15.3	17.3	17.3	17.2	17.3
	1365	MBh	41.6	42.2	43.4	45.2	41.3	41.8	43.0	44.9	40.2	40.8	42.0	43.8	38.4	39.0	40.2	42.0	36.2	36.8	38.0	39.8	34.2	34.8	36.0	37.8
		S/T	1.00	0.94	0.81	0.7	1.00	1.00	0.82	0.7	1.00	1.00	0.84	0.7	1.00	1.00	0.86	0.7	1.00	1.00	0.88	0.7	1.00	1.00	1.00	0.8
		ΔT	31	29	25	22	31	29	25	22	31	29	26	22	31	29	25	22	30	29	25	22	32	30	26	23
		kW	2.63	2.63	2.62	2.64	2.91	2.91	2.90	2.93	3.22	3.22	3.22	3.24	3.56	3.56	3.56	3.58	3.94	3.94	3.94	3.96	4.39	4.39	4.38	4.40
		Amps	9.3	9.3	9.3	9.3	10.6	10.6	10.5	10.6	12.0	12.0	12.0	12.1	13.6	13.5	13.5	13.6	15.3	15.3	15.3	15.4	17.3	17.3	17.3	17.4
	1575	MBh	42.4	43.0	44.2	46.0	42.1	42.6	43.8	45.7	41.0	41.6	42.8	44.6	39.2	**39.8**	41.0	42.8	37.0	37.6	38.8	40.6	35.0	35.6	36.8	38.6
		S/T	1.00	0.98	0.85	0.7	1.00	1.00	0.85	0.7	1.00	1.00	0.88	0.7	1.00	**1.00**	0.90	0.8	1.00	1.00	1.00	0.8	1.00	1.00	1.00	0.8
		ΔT	30	28	24	21	30	28	24	21	30	28	25	21	30	**28**	24	21	29	27	24	20	31	29	25	22
		kW	2.64	2.64	2.64	2.7	2.93	2.92	2.92	2.9	3.24	3.24	3.23	3.3	3.58	**3.58**	3.57	3.6	3.96	3.96	3.95	4.0	4.40	4.40	4.40	4.4
		Amps	9.4	9.3	9.3	9.4	10.6	10.6	10.6	10.7	12.1	12.1	12.0	12.1	13.6	**13.6**	13.6	13.7	15.4	15.4	15.3	15.4	17.4	17.4	17.4	17.5

IDB: Entering Indoor Dry Bulb Temperature

Shaded area reflects AHRI conditions

kW = Total system power

High and low pressures are measured at the liquid and suction service valves.

Amps = outdoor unit amps (comp.+fan)

Expanded Cooling Data — GLXS3BN4810A*+ CAPTA6030A*

			Outdoor Ambient Temperature																							
			65				75				85				95				105				115			
			Entering Indoor Wet Bulb Temperature																							
IDB	Airflow		59	63	67	71	59	63	67	71	59	63	67	71	59	63	67	71	59	63	67	71	59	63	67	71
70	1400	MBh	46.9	47.6	48.9	-	46.5	47.1	48.5	-	45.3	45.9	47.3	-	43.2	43.9	45.2	-	40.7	41.3	42.7	-	38.3	39.0	40.4	-
		S/T	0.64	0.56	0.43	-	0.64	0.57	0.44	-	0.67	0.59	0.46	-	1.00	0.61	0.48	-	1.00	0.63	0.50	-	1.00	0.68	0.55	-
		ΔT	20	18	15	-	20	18	14	-	20	18	15	-	20	18	14	-	20	18	14	-	21	19	15	-
		kW	3.03	3.03	3.02	-	3.37	3.37	3.37	-	3.76	3.76	3.75	-	4.18	4.17	4.17	-	4.64	4.64	4.63	-	5.19	5.19	5.18	-
		Amps	11.0	11.0	11.0	-	12.6	12.6	12.6	-	14.4	14.4	14.3	-	16.3	16.3	16.3	-	18.4	18.4	18.4	-	20.9	20.9	20.9	-
	1600	MBh	47.7	48.4	49.8	-	47.3	48.0	49.4	-	46.1	46.8	48.2	-	44.0	44.7	46.1	-	41.5	42.2	43.5	-	39.2	39.8	41.2	-
		S/T	0.67	0.60	0.47	-	0.68	0.60	0.48	-	0.70	0.63	0.50	-	1.00	0.65	0.52	-	1.00	0.67	0.54	-	1.00	0.72	0.59	-
		ΔT	19	17	13	-	19	17	13	-	19	17	14	-	19	17	13	-	19	17	13	-	20	18	14	-
		kW	3.05	3.04	3.04	-	3.39	3.39	3.38	-	3.78	3.77	3.77	-	4.19	4.19	4.18	-	4.66	4.66	4.65	-	5.21	5.20	5.20	-
		Amps	11.1	11.1	11.1	-	12.7	12.7	12.7	-	14.5	14.4	14.4	-	16.4	16.4	16.3	-	18.5	18.5	18.5	-	21.0	21.0	21.0	-
	1800	MBh	48.8	49.4	50.8	-	48.4	49.0	50.4	-	47.2	47.8	49.2	-	45.1	45.7	47.1	-	42.5	43.2	44.6	-	40.2	40.9	42.3	-
		S/T	0.68	0.61	0.48	-	0.68	0.61	0.48	-	1.00	0.64	0.51	-	1.00	0.65	0.53	-	1.00	0.68	0.55	-	1.00	0.72	0.60	-
		ΔT	18	16	12	-	18	16	12	-	18	16	13	-	18	16	12	-	18	16	12	-	19	17	13	-
		kW	3.06	3.06	3.05	-	3.41	3.40	3.40	-	3.79	3.79	3.78	-	4.21	4.21	4.20	-	4.67	4.67	4.67	-	5.22	5.22	5.21	-
		Amps	11.2	11.2	11.1	-	12.8	12.8	12.7	-	14.5	14.5	14.5	-	16.4	16.4	16.4	-	18.6	18.6	18.5	-	21.1	21.1	21.0	-
75	1400	MBh	46.9	47.6	49.0	51.1	46.5	47.2	48.5	50.7	45.3	46.0	47.3	49.5	43.2	**43.9**	45.3	47.4	40.7	41.3	42.7	44.8	38.4	39.0	40.4	42.5
		S/T	0.76	0.69	0.56	0.4	0.77	0.69	0.56	0.4	1.00	0.72	0.59	0.5	1.00	**0.74**	0.61	0.5	1.00	0.76	0.63	0.5	1.00	1.00	0.68	0.5
		ΔT	25	23	19	15	24	23	19	15	25	23	19	15	24	**22**	19	15	24	22	19	15	25	23	20	16
		kW	3.03	3.02	3.02	3.0	3.37	3.37	3.36	3.4	3.76	3.75	3.75	3.8	4.17	**4.17**	4.17	4.2	4.64	4.64	4.63	4.7	5.19	5.18	5.18	5.2
		Amps	11.0	11.0	11.0	11.1	12.6	12.6	12.6	12.7	14.4	14.4	14.3	14.5	16.3	**16.3**	16.2	16.4	18.4	18.4	18.4	18.5	20.9	20.9	20.9	21.0
	1600	MBh	47.8	48.4	49.8	51.9	47.4	48.0	49.4	51.5	46.1	46.8	48.2	50.3	44.1	44.7	46.1	48.2	41.5	42.2	43.6	45.7	39.2	39.9	41.2	43.4
		S/T	0.79	0.72	0.59	0.5	1.00	0.73	0.60	0.5	1.00	0.75	0.62	0.5	1.00	0.77	0.64	0.5	1.00	0.79	0.66	0.5	1.00	1.00	0.71	0.6
		ΔT	23	21	18	14	23	21	18	14	24	22	18	14	23	21	18	14	23	21	17	14	24	22	19	15
		kW	3.04	3.04	3.03	3.06	3.39	3.39	3.38	3.41	3.77	3.77	3.77	3.79	4.19	4.19	4.18	4.21	4.66	4.65	4.65	4.68	5.20	5.20	5.20	5.22
		Amps	11.1	11.1	11.1	11.2	12.7	12.7	12.6	12.8	14.4	14.4	14.4	14.5	16.4	16.3	16.3	16.4	18.5	18.5	18.5	18.6	21.0	21.0	21.0	21.1
	1800	MBh	48.8	49.5	50.9	53.0	48.4	49.1	50.4	52.5	47.2	47.8	49.2	51.3	45.1	**45.8**	47.1	49.3	42.6	43.2	44.6	46.7	40.2	40.9	42.3	44.4
		S/T	0.80	0.73	0.60	0.5	1.00	0.74	0.61	0.5	1.00	0.76	0.63	0.5	1.00	**0.78**	0.65	0.5	1.00	1.00	0.67	0.5	1.00	1.00	0.72	0.6
		ΔT	22	20	17	13	22	20	17	13	23	21	17	13	22	**20**	17	13	22	20	16	13	23	21	18	14
		kW	3.06	3.06	3.05	3.1	3.40	3.40	3.39	3.4	3.79	3.79	3.78	3.8	4.21	**4.20**	4.20	4.2	4.67	4.67	4.66	4.7	5.22	5.22	5.21	5.2
		Amps	11.2	11.2	11.1	11.3	12.8	12.7	12.7	12.8	14.5	14.5	14.5	14.6	16.4	**16.4**	16.4	16.5	18.6	18.5	18.5	18.6	21.1	21.0	21.0	21.1

IDB: Entering Indoor Dry Bulb Temperature

Shaded area reflects ACCA (TVA) conditions

kW = Total system power

High and low pressures are measured at the liquid and suction service valves.

Amps = outdoor unit amps (comp.+fan)

EXPANDED COOLING DATA — GLXS3BN4810A*+ CAPTA6030A* (CONT.)

			Outdoor Ambient Temperature																							
			65				75				85				95				105				115			
			Entering Indoor Wet Bulb Temperature																							
IDB	Airflow		59	63	67	71	59	63	67	71	59	63	67	71	59	63	67	71	59	63	67	71	59	63	67	71
80	1400	MBh	47.2	47.8	49.2	51.3	46.8	47.4	48.8	50.9	45.5	46.2	47.6	49.7	43.5	44.1	**45.5**	47.6	40.9	41.6	43.0	45.1	38.6	39.3	40.6	42.8
		S/T	1.00	0.81	0.68	0.5	1.00	0.81	0.68	0.5	1.00	0.84	0.71	0.6	1.00	1.00	**0.73**	0.6	1.00	1.00	0.75	0.6	1.00	1.00	0.80	0.7
		ΔT	29	27	23	19	29	27	23	19	29	27	23	20	29	27	**23**	19	29	27	23	19	30	28	24	20
		kW	3.03	3.03	3.02	3.0	3.37	3.37	3.36	3.4	3.76	3.76	3.75	3.8	4.18	4.17	**4.17**	4.2	4.64	4.64	4.63	4.7	5.19	5.19	5.18	5.2
		Amps	11.0	11.0	11.0	11.1	12.6	12.6	12.6	12.7	14.4	14.4	14.3	14.5	16.3	16.3	**16.2**	16.4	18.4	18.4	18.4	18.5	20.9	20.9	20.9	21.0
	1600	MBh	48.0	48.7	50.0	52.2	47.6	48.3	49.6	51.7	46.4	47.0	48.4	50.5	44.3	45.0	46.3	48.5	41.8	42.4	43.8	45.9	39.4	40.1	41.5	43.6
		S/T	1.00	0.84	0.71	0.6	1.00	0.85	0.72	0.6	1.00	0.87	0.74	0.6	1.00	1.00	0.76	0.6	1.00	1.00	0.78	0.6	1.00	1.00	0.83	0.7
		ΔT	28	26	22	18	28	26	22	18	28	26	22	19	28	26	22	18	27	25	22	18	29	27	23	19
		kW	3.05	3.04	3.04	3.06	3.39	3.39	3.38	3.41	3.78	3.77	3.77	3.79	4.19	4.19	4.18	4.21	4.66	4.66	4.65	4.68	5.21	5.20	5.20	5.22
		Amps	11.1	11.1	11.1	11.2	12.7	12.7	12.7	12.8	14.5	14.4	14.4	14.5	16.4	16.4	16.3	16.4	18.5	18.5	18.5	18.6	21.0	21.0	21.0	21.1
	1800	MBh	49.1	49.7	51.1	53.2	48.6	49.3	50.7	52.8	47.4	48.1	49.5	51.6	45.4	46.0	47.4	49.5	42.8	43.5	44.8	47.0	40.5	41.1	42.5	44.6
		S/T	1.00	0.85	0.72	0.6	1.00	0.86	0.73	0.6	1.00	1.00	0.75	0.6	1.00	1.00	0.77	0.6	1.00	1.00	0.79	0.7	1.00	1.00	0.84	0.7
		ΔT	27	25	21	17	27	25	21	17	27	25	21	18	27	25	21	17	26	24	21	17	28	26	22	18
		kW	3.06	3.06	3.05	3.1	3.41	3.40	3.40	3.4	3.79	3.79	3.78	3.8	4.21	4.21	4.20	4.2	4.67	4.67	4.67	4.7	5.22	5.22	5.21	5.2
		Amps	11.2	11.2	11.1	11.3	12.8	12.7	12.7	12.8	14.5	14.5	14.5	14.6	16.4	16.4	16.4	16.5	18.6	18.6	18.5	18.6	21.1	21.1	21.0	21.2
85	1400	MBh	47.9	48.6	50.0	52.1	47.5	48.2	49.6	51.7	46.3	47.0	48.4	50.5	44.2	**44.9**	46.3	48.4	41.7	42.4	43.7	45.9	39.4	40.0	41.4	43.5
		S/T	1.00	0.90	0.77	0.6	1.00	1.00	0.78	0.6	1.00	1.00	0.80	0.7	1.00	**1.00**	0.82	0.7	1.00	1.00	0.84	0.7	1.00	1.00	1.00	0.8
		ΔT	33	31	27	23	33	31	27	23	33	31	27	24	33	**31**	27	23	32	30	27	23	34	32	28	24
		kW	3.03	3.03	3.03	3.1	3.38	3.38	3.37	3.4	3.77	3.76	3.76	3.8	4.18	**4.18**	4.17	4.2	4.65	4.65	4.64	4.7	5.20	5.19	5.19	5.2
		Amps	11.1	11.1	11.0	11.1	12.6	12.6	12.6	12.7	14.4	14.4	14.4	14.5	16.3	**16.3**	16.3	16.4	18.5	18.4	18.4	18.5	21.0	20.9	20.9	21.0
	1600	MBh	48.8	49.4	50.8	52.9	48.4	49.0	50.4	52.5	47.2	47.8	49.2	51.3	45.1	45.7	47.1	49.2	42.5	43.2	44.6	46.7	40.2	40.9	42.3	44.4
		S/T	1.00	0.94	0.81	0.7	1.00	1.00	0.82	0.7	1.00	1.00	0.84	0.7	1.00	1.00	0.86	0.7	1.00	1.00	1.00	0.7	1.00	1.00	1.00	0.8
		ΔT	32	30	26	22	32	30	26	22	32	30	26	22	32	30	26	22	31	29	26	22	33	31	27	23
		kW	3.05	3.05	3.04	3.07	3.40	3.39	3.39	3.41	3.78	3.78	3.77	3.80	4.20	4.20	4.19	4.22	4.67	4.66	4.66	4.68	5.21	5.21	5.20	5.23
		Amps	11.1	11.1	11.1	11.2	12.7	12.7	12.7	12.8	14.5	14.5	14.4	14.6	16.4	16.4	16.4	16.5	18.5	18.5	18.5	18.6	21.0	21.0	21.0	21.1
	1800	MBh	49.8	50.5	51.9	54.0	49.4	50.1	51.5	53.6	48.2	48.9	50.2	52.4	46.1	**46.8**	48.2	50.3	43.6	44.2	45.6	47.7	41.3	41.9	43.3	45.4
		S/T	1.00	0.95	0.82	0.7	1.00	1.00	0.82	0.7	1.00	1.00	0.85	0.7	1.00	**1.00**	0.87	0.7	1.00	1.00	1.00	0.7	1.00	1.00	1.00	0.8
		ΔT	31	29	25	21	31	29	25	21	31	29	25	21	31	**29**	25	21	30	28	25	21	32	30	26	22
		kW	3.07	3.06	3.06	3.1	3.41	3.41	3.40	3.4	3.80	3.79	3.79	3.8	4.21	**4.21**	4.21	4.2	4.68	4.68	4.67	4.7	5.23	5.22	5.22	5.2
		Amps	11.2	11.2	11.2	11.3	12.8	12.8	12.8	12.9	14.6	14.5	14.5	14.6	16.5	**16.5**	16.4	16.5	18.6	18.6	18.6	18.7	21.1	21.1	21.1	21.2

IDB: Entering Indoor Dry Bulb Temperature

Shaded area reflects AHRI conditions

kW = Total system power

High and low pressures are measured at the liquid and suction service valves.

Amps = outdoor unit amps (comp.+fan)

Expanded Cooling Data — GLXS3BN6010A+ CAPTA6030A**

			Outdoor Ambient Temperature																							
			65				75				85				95				105				115			
			Entering Indoor Wet Bulb Temperature																							
IDB	Airflow		59	63	67	71	59	63	67	71	59	63	67	71	59	63	67	71	59	63	67	71	59	63	67	71
70	1490	MBh	56.7	57.5	59.2	-	56.2	57.0	58.7	-	54.7	55.5	57.2	-	52.2	53.0	54.7	-	49.1	49.9	51.6	-	46.3	47.1	48.8	-
		S/T	0.60	0.53	0.41	-	0.60	0.53	0.41	-	0.62	0.56	0.43	-	0.64	0.57	0.45	-	0.66	0.59	0.47	-	1.00	0.64	0.52	-
		ΔT	22	20	16	-	22	19	16	-	22	20	16	-	22	19	15	-	21	19	15	-	23	21	17	-
		kW	3.59	3.59	3.58	-	4.03	4.03	4.02	-	4.52	4.52	4.51	-	5.05	5.05	5.04	-	5.64	5.64	5.63	-	6.34	6.33	6.33	-
		Amps	13.4	13.4	13.4	-	15.4	15.4	15.4	-	17.7	17.6	17.6	-	20.1	20.1	20.0	-	22.8	22.8	22.7	-	26.0	26.0	25.9	-
	2000	MBh	59.5	60.3	62.0	-	59.0	59.8	61.5	-	57.6	58.4	60.0	-	55.1	55.9	57.5	-	52.0	52.8	54.5	-	49.2	50.0	51.7	-
		S/T	0.63	0.56	0.44	-	0.64	0.57	0.45	-	0.66	0.59	0.47	-	0.68	0.61	0.49	-	1.00	0.63	0.51	-	1.00	0.67	0.55	-
		ΔT	19	17	13	-	19	17	13	-	19	17	13	-	19	17	13	-	19	16	13	-	20	18	14	-
		kW	3.64	3.64	3.63	-	4.08	4.08	4.07	-	4.57	4.57	4.56	-	5.10	5.09	5.09	-	5.69	5.69	5.68	-	6.38	6.38	6.37	-
		Amps	13.6	13.6	13.6	-	15.6	15.6	15.6	-	17.9	17.9	17.8	-	20.3	20.3	20.3	-	23.0	23.0	23.0	-	26.2	26.2	26.1	-
	2250	MBh	61.5	62.3	64.0	-	61.0	61.8	63.5	-	59.6	60.4	62.0	-	57.0	57.8	59.5	-	54.0	54.8	56.4	-	51.2	52.0	53.6	-
		S/T	0.60	0.53	0.41	-	0.60	0.54	0.41	-	0.63	0.56	0.44	-	1.00	0.58	0.45	-	1.00	0.60	0.47	-	1.00	0.64	0.52	-
		ΔT	18	16	12	-	18	16	12	-	18	16	12	-	18	16	12	-	17	15	11	-	19	17	13	-
		kW	3.66	3.66	3.65	-	4.10	4.10	4.09	-	4.59	4.59	4.58	-	5.12	5.12	5.11	-	5.71	5.71	5.70	-	6.40	6.40	6.39	-
		Amps	13.7	13.7	13.7	-	15.7	15.7	15.7	-	18.0	18.0	17.9	-	20.4	20.4	20.3	-	23.1	23.1	23.1	-	26.3	26.3	26.2	-
75	1490	MBh	56.7	57.5	59.2	61.7	56.2	57.0	58.7	61.2	54.8	55.6	57.2	59.8	52.2	**53.0**	54.7	57.3	49.2	50.0	51.6	54.2	46.4	47.2	48.8	51.4
		S/T	0.71	0.64	0.52	0.4	0.72	0.65	0.53	0.4	0.74	0.67	0.55	0.4	1.00	**0.69**	0.57	0.4	1.00	0.71	0.59	0.5	1.00	0.75	0.63	0.5
		ΔT	26	24	20	16	26	24	20	16	27	24	20	16	26	**24**	20	16	26	24	20	16	27	25	21	17
		kW	3.59	3.59	3.58	3.6	4.03	4.03	4.02	4.1	4.52	4.52	4.51	4.5	5.05	**5.04**	5.04	5.1	5.64	5.64	5.63	5.7	6.33	6.33	6.32	6.4
		Amps	13.4	13.4	13.4	13.5	15.4	15.4	15.4	15.5	17.7	17.6	17.6	17.8	20.1	**20.1**	20.0	20.2	22.8	22.8	22.7	22.9	26.0	25.9	25.9	26.1
	2000	MBh	59.6	60.4	62.0	64.6	59.1	59.9	61.5	64.1	57.6	58.4	60.1	62.6	55.1	55.9	57.6	60.1	52.0	52.8	54.5	57.0	49.2	50.0	51.7	54.2
		S/T	0.75	0.68	0.56	0.4	0.75	0.68	0.56	0.4	1.00	0.71	0.59	0.5	1.00	0.72	0.60	0.5	1.00	0.74	0.62	0.5	1.00	1.00	0.67	0.5
		ΔT	24	22	18	13	24	21	17	13	24	22	18	14	24	21	17	13	23	21	17	13	25	22	19	14
		kW	3.64	3.64	3.63	3.66	4.08	4.07	4.07	4.10	4.57	4.56	4.56	4.59	5.10	5.09	5.08	5.12	5.69	5.68	5.68	5.71	6.38	6.38	6.37	6.40
		Amps	13.6	13.6	13.6	13.7	15.6	15.6	15.6	15.7	17.9	17.9	17.8	18.0	20.3	20.3	20.2	20.4	23.0	23.0	22.9	23.1	26.2	26.2	26.1	26.3
	2250	MBh	61.6	62.3	64.0	66.6	61.1	61.8	63.5	66.1	59.6	60.4	62.1	64.6	57.1	**57.9**	59.5	62.1	54.0	54.8	56.5	59.0	51.2	52.0	53.7	56.2
		S/T	0.71	0.65	0.52	0.4	1.00	0.65	0.53	0.4	1.00	0.67	0.55	0.4	1.00	**0.69**	0.57	0.4	1.00	0.71	0.59	0.5	1.00	1.00	0.64	0.5
		ΔT	22	20	16	12	22	20	16	12	23	21	17	13	22	**20**	16	12	22	20	16	12	23	21	17	13
		kW	3.66	3.66	3.65	3.7	4.10	4.09	4.09	4.1	4.59	4.58	4.58	4.6	5.12	**5.11**	5.10	5.1	5.71	5.70	5.70	5.7	6.40	6.40	6.39	6.4
		Amps	13.7	13.7	13.7	13.8	15.7	15.7	15.7	15.8	18.0	17.9	17.9	18.1	20.4	**20.4**	20.3	20.5	23.1	23.1	23.0	23.2	26.3	26.2	26.2	26.4

IDB: Entering Indoor Dry Bulb Temperature

Shaded area reflects ACCA (TVA) conditions

kW = Total system power

High and low pressures are measured at the liquid and suction service valves.

Amps = outdoor unit amps (comp.+fan)

EXPANDED COOLING DATA — GLXS3BN6010A*+ CAPTA6030A* (CONT.)

			Outdoor Ambient Temperature																							
			65				75				85				95				105				115			
			Entering Indoor Wet Bulb Temperature																							
IDB	Airflow		59	63	67	71	59	63	67	71	59	63	67	71	59	63	67	71	59	63	67	71	59	63	67	71
80	1490	MBh	57.0	57.8	59.5	62.0	56.5	57.3	59.0	61.5	55.1	55.8	57.5	60.1	52.5	53.3	**55.0**	57.6	49.5	50.3	51.9	54.5	46.7	47.5	49.1	51.7
		S/T	0.82	0.76	0.63	0.5	1.00	0.76	0.64	0.5	1.00	0.78	0.66	0.5	1.00	0.80	**0.68**	0.6	1.00	0.82	0.70	0.6	1.00	1.00	0.75	0.6
		ΔT	31	29	25	21	31	29	25	21	31	29	25	21	31	29	**25**	21	31	29	25	20	32	30	26	22
		kW	3.59	3.59	3.58	3.6	4.03	4.03	4.02	4.1	4.52	4.52	4.51	4.5	5.05	5.05	**5.04**	5.1	5.64	5.64	5.63	5.7	6.34	6.33	6.32	6.4
		Amps	13.4	13.4	13.4	13.5	15.4	15.4	15.4	15.5	17.7	17.6	17.6	17.8	20.1	20.1	**20.0**	20.2	22.8	22.8	22.7	22.9	26.0	26.0	25.9	26.1
	2000	MBh	59.9	60.7	62.3	64.9	59.4	60.2	61.8	64.4	57.9	58.7	60.4	62.9	55.4	56.2	57.9	60.4	52.3	53.1	54.8	57.3	49.5	50.3	52.0	54.5
		S/T	1.00	0.79	0.67	0.5	1.00	0.80	0.68	0.5	1.00	0.82	0.70	0.6	1.00	0.84	0.72	0.6	1.00	1.00	0.74	0.6	1.00	1.00	0.78	0.7
		ΔT	28	26	22	18	28	26	22	18	29	26	22	18	28	26	22	18	28	26	22	18	29	27	23	19
		kW	3.64	3.64	3.63	3.66	4.08	4.08	4.07	4.10	4.57	4.57	4.56	4.59	5.10	5.09	5.09	5.12	5.69	5.69	5.68	5.71	6.38	6.38	6.37	6.41
		Amps	13.6	13.6	13.6	13.7	15.6	15.6	15.6	15.7	17.9	17.9	17.8	18.0	20.3	20.3	20.3	20.4	23.0	23.0	23.0	23.1	26.2	26.2	26.1	26.3
	2250	MBh	61.8	62.6	64.3	66.9	61.3	62.1	63.8	66.4	59.9	60.7	62.3	64.9	57.4	58.2	59.8	62.4	54.3	55.1	56.8	59.3	51.5	52.3	54.0	56.5
		S/T	1.00	0.76	0.64	0.5	1.00	0.76	0.64	0.5	1.00	0.79	0.66	0.5	1.00	1.00	0.68	0.6	1.00	1.00	0.70	0.6	1.00	1.00	0.75	0.6
		ΔT	27	25	21	17	27	25	21	17	27	25	21	17	27	25	21	17	27	25	21	17	28	26	22	18
		kW	3.66	3.66	3.65	3.7	4.10	4.10	4.09	4.1	4.59	4.59	4.58	4.6	5.12	5.11	5.11	5.1	5.71	5.71	5.70	5.7	6.40	6.40	6.39	6.4
		Amps	13.7	13.7	13.7	13.8	15.7	15.7	15.7	15.8	18.0	18.0	17.9	18.1	20.4	20.4	20.3	20.5	23.1	23.1	23.0	23.2	26.3	26.3	26.2	26.4
85	1490	MBh	58.0	58.7	60.4	63.0	57.5	58.2	59.9	62.5	56.0	56.8	58.5	61.0	53.5	**54.3**	55.9	58.5	50.4	51.2	52.9	55.4	47.6	48.4	50.1	52.6
		S/T	1.00	0.85	0.72	0.6	1.00	0.85	0.73	0.6	1.00	1.00	0.75	0.6	1.00	**1.00**	0.77	0.6	1.00	1.00	0.79	0.7	1.00	1.00	0.84	0.7
		ΔT	35	33	29	25	35	33	29	25	35	33	29	25	35	**33**	29	25	35	33	29	25	36	34	30	26
		kW	3.60	3.60	3.59	3.6	4.04	4.04	4.03	4.1	4.53	4.53	4.52	4.6	5.06	**5.06**	5.05	5.1	5.65	5.65	5.64	5.7	6.34	6.34	6.33	6.4
		Amps	13.5	13.4	13.4	13.6	15.5	15.4	15.4	15.6	17.7	17.7	17.7	17.8	20.1	**20.1**	20.1	20.2	22.8	22.8	22.8	22.9	26.0	26.0	26.0	26.1
	2000	MBh	60.8	61.6	63.3	65.8	60.3	61.1	62.8	65.3	58.9	59.6	61.3	63.9	56.3	57.1	58.8	61.4	53.3	54.1	55.7	58.3	50.5	51.2	52.9	55.5
		S/T	1.00	0.88	0.76	0.6	1.00	0.89	0.77	0.6	1.00	1.00	0.79	0.7	1.00	1.00	0.81	0.7	1.00	1.00	0.83	0.7	1.00	1.00	1.00	0.7
		ΔT	32	30	26	22	32	30	26	22	33	31	27	23	32	30	26	22	32	30	26	22	33	31	27	23
		kW	3.65	3.65	3.64	3.67	4.09	4.08	4.08	4.11	4.58	4.57	4.57	4.60	5.11	5.10	5.10	5.13	5.70	5.69	5.69	5.72	6.39	6.39	6.38	6.41
		Amps	13.7	13.7	13.6	13.8	15.7	15.7	15.6	15.8	17.9	17.9	17.9	18.0	20.3	20.3	20.3	20.4	23.0	23.0	23.0	23.1	26.2	26.2	26.2	26.3
	2250	MBh	62.8	63.6	65.3	67.8	62.3	63.1	64.8	67.3	60.8	61.6	63.3	65.8	58.3	**59.1**	60.8	63.3	55.2	56.0	57.7	60.3	52.4	53.2	54.9	57.5
		S/T	1.00	0.85	0.73	0.6	1.00	1.00	0.73	0.6	1.00	1.00	0.76	0.6	1.00	**1.00**	0.77	0.6	1.00	1.00	1.00	0.7	1.00	1.00	1.00	0.7
		ΔT	31	29	25	21	31	29	25	21	32	29	25	21	31	**29**	25	21	31	29	25	21	32	30	26	22
		kW	3.67	3.67	3.66	3.7	4.11	4.10	4.10	4.1	4.60	4.59	4.59	4.6	5.13	**5.12**	5.12	5.1	5.72	5.71	5.71	5.7	6.41	6.41	6.40	6.4
		Amps	13.8	13.8	13.7	13.9	15.8	15.8	15.7	15.9	18.0	18.0	18.0	18.1	20.4	**20.4**	20.4	20.5	23.1	23.1	23.1	23.2	26.3	26.3	26.3	26.4

IDB: Entering Indoor Dry Bulb Temperature

Shaded area reflects AHRI conditions

kW = Total system power

High and low pressures are measured at the liquid and suction service valves.

Amps = outdoor unit amps (comp.+fan)

GLXS3BN1810*/CAPTA2422* Conditions: 80 °F IBD, 67 °F IWB @ 625 CFM				
Outdoor Tem. ° F.	Total BTU/h	Sensible BTU/h	Latent BTU/h	Total Watts
75	19,300	12,540	6,760	1,320
80	19,060	12,600	6,460	1,390
85	18,820	12,660	6,160	1,460
90	18,410	12,540	5,870	1,540
95	**18,000**	**12,420**	**5,580**	**1,620**
100	17,495	12,245	5,250	1,705
105	16,990	12,070	4,920	1,790
110	16,535	12,120	4,415	1,890
115	16,080	12,170	3,910	1,990
TVA Conditions @ 95° OD DB, 75° ID DB 63° ID WB				
95°	**17,360**	**12,140**	**5,220**	**1,620**

GLXS3BN2410*/CAPTA2422* Conditions: 80 °F IBD, 67 °F IWB @ 700 CFM				
Outdoor Tem. ° F.	Total BTU/h	Sensible BTU/h	Latent BTU/h	Total Watts
75	24,660	16,720	7,940	1,670
80	24,355	16,800	7,555	1,765
85	24,050	16,880	7,170	1,860
90	23,525	16,725	6,800	1,965
95	**23,000**	**16,570**	**6,430**	**2,070**
100	22,360	16,335	6,025	2,185
105	21,720	16,100	5,620	2,300
110	21,130	16,165	4,965	2,435
115	20,540	16,230	4,310	2,570
TVA Conditions @ 95° OD DB, 75° ID DB 63° ID WB				
95°	**22,180**	**16,190**	**5,990**	**2,070**

GLXS3BN3010*/CAPTA3026* Conditions: 80 °F IBD, 67 °F IWB @ 950 CFM				
Outdoor Tem. ° F.	Total BTU/h	Sensible BTU/h	Latent BTU/h	Total Watts
75	30,670	21,380	9,290	2,050
80	30,290	21,480	8,810	2,175
85	29,910	21,580	8,330	2,300
90	29,255	21,380	7,875	2,435
95	**28,600**	**21,180**	**7,420**	**2,570**
100	27,800	20,880	6,920	2,725
105	27,000	20,580	6,420	2,880
110	26,270	20,665	5,605	3,060
115	25,540	20,750	4,790	3,240
TVA Conditions @ 95° OD DB, 75° ID DB 63° ID WB				
95°	**27,580**	**20,700**	**6,880**	**2,580**

GLXS3BN3610*/CAPTA3626* Conditions: 80 °F IBD, 67 °F IWB @ 1150 CFM				
Outdoor Tem. ° F.	Total BTU/h	Sensible BTU/h	Latent BTU/h	Total Watts
75	36,670	26,290	10,380	2,460
80	36,215	26,415	9,800	2,610
85	35,760	26,540	9,220	2,760
90	34,980	26,295	8,685	2,920
95	**34,200**	**26,050**	**8,150**	**3,080**
100	33,245	25,680	7,565	3,260
105	32,290	25,310	6,980	3,440
110	31,420	27,930	3,490	3,645
115	30,550	30,550	0	3,850
TVA Conditions @ 95° OD DB, 75° ID DB 63° ID WB				
95°	**32,980**	**25,450**	**7,530**	**3,080**

GLXS3BN4210*/CAPTA4230* Conditions: 80 °F IBD, 67 °F IWB @ 1365 CFM				
Outdoor Tem. ° F.	Total BTU/h	Sensible BTU/h	Latent BTU/h	Total Watts
75	42,350	30,250	12,100	2,900
80	41,830	30,390	11,440	3,055
85	41,310	30,530	10,780	3,210
90	40,405	30,245	10,160	3,380
95	**39,500**	**29,960**	**9,540**	**3,550**
100	38,395	29,535	8,860	3,740
105	37,290	29,110	8,180	3,930
110	36,285	29,235	7,050	4,155
115	35,280	29,360	5,920	4,380
TVA Conditions @ 95° OD DB, 75° ID DB 63° ID WB				
95°	**38,090**	**29,280**	**8,810**	**3,560**

GLXS3BN6010*/CAPTA6030* Conditions: 80 °F IBD, 67 °F IWB @ 1490 CFM				
Outdoor Tem. ° F.	Total BTU/h	Sensible BTU/h	Latent BTU/h	Total Watts
75	58,970	37,730	21,240	4,020
80	58,240	37,905	20,335	4,265
85	57,510	38,080	19,430	4,510
90	56,255	37,730	18,525	4,775
95	**55,000**	**37,380**	**17,620**	**5,040**
100	53,465	36,850	16,615	5,335
105	51,930	36,320	15,610	5,630
110	50,525	36,470	14,055	5,975
115	49,120	36,620	12,500	6,320
TVA Conditions @ 95° OD DB, 75° ID DB 63° ID WB				
95°	**53,040**	**36,530**	**16,510**	**5,040**

GLXS3BN4810*/CAPT6030* Conditions: 80 °F IBD, 67 °F IWB @ 1400 CFM				
Outdoor Tem. ° F.	Total BTU/h	Sensible BTU/h	Latent BTU/h	Total Watts
75	48,790	33,330	15,460	3,360
80	48,185	33,490	14,695	3,555
85	47,580	33,650	13,930	3,750
90	46,540	33,335	13,205	3,960
95	**45,500**	**33,020**	**12,480**	**4,170**
100	44,230	32,550	11,680	4,400
105	42,960	32,080	10,880	4,630
110	41,800	32,215	9,585	4,905
115	40,640	32,350	8,290	5,180
TVA Conditions @ 95° OD DB, 75° ID DB 63° ID WB				
95°	**43,880**	**32,270**	**11,610**	**4,170**

NOTE: no factory installed crankcase heater

Model	Dimensions		
	W"	D"	H"
GLXS3BN1810A*	26	26	27½
GLXS3BN2410A*	26	26	27½
GLXS3BN3010A*	26	26	32½
GLXS3BN3610A*	26	26	32½
GLXS3BN4210A*	29	29	35¾
GLXS3BN4810A*	29	29	39½
GLXS3BN6010A*	35½	35½	39½

*Note: All the Dimensions (W, D, H) are for reference only.

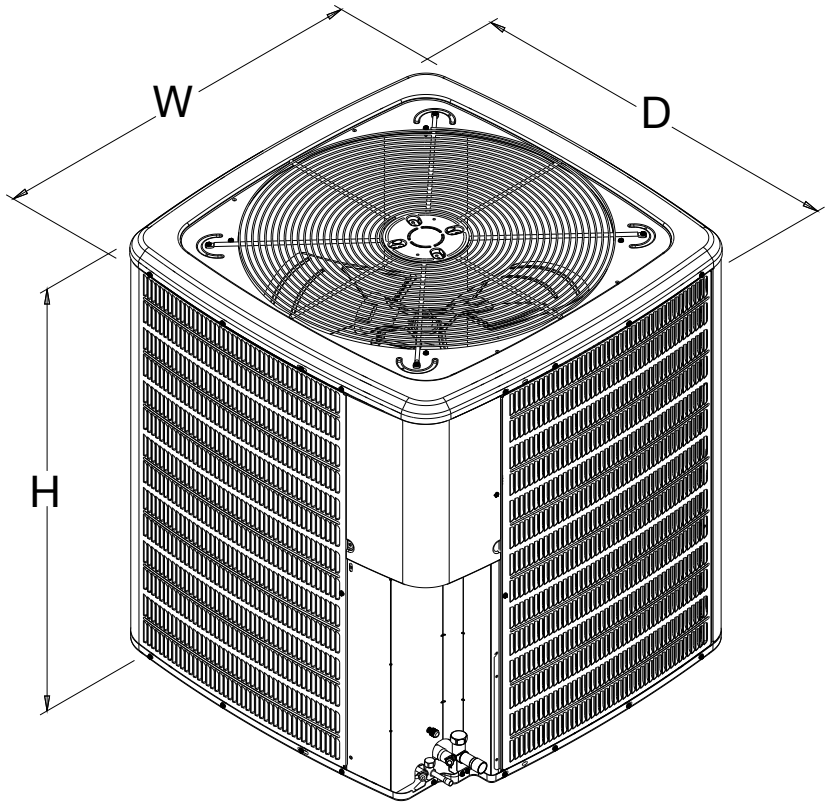

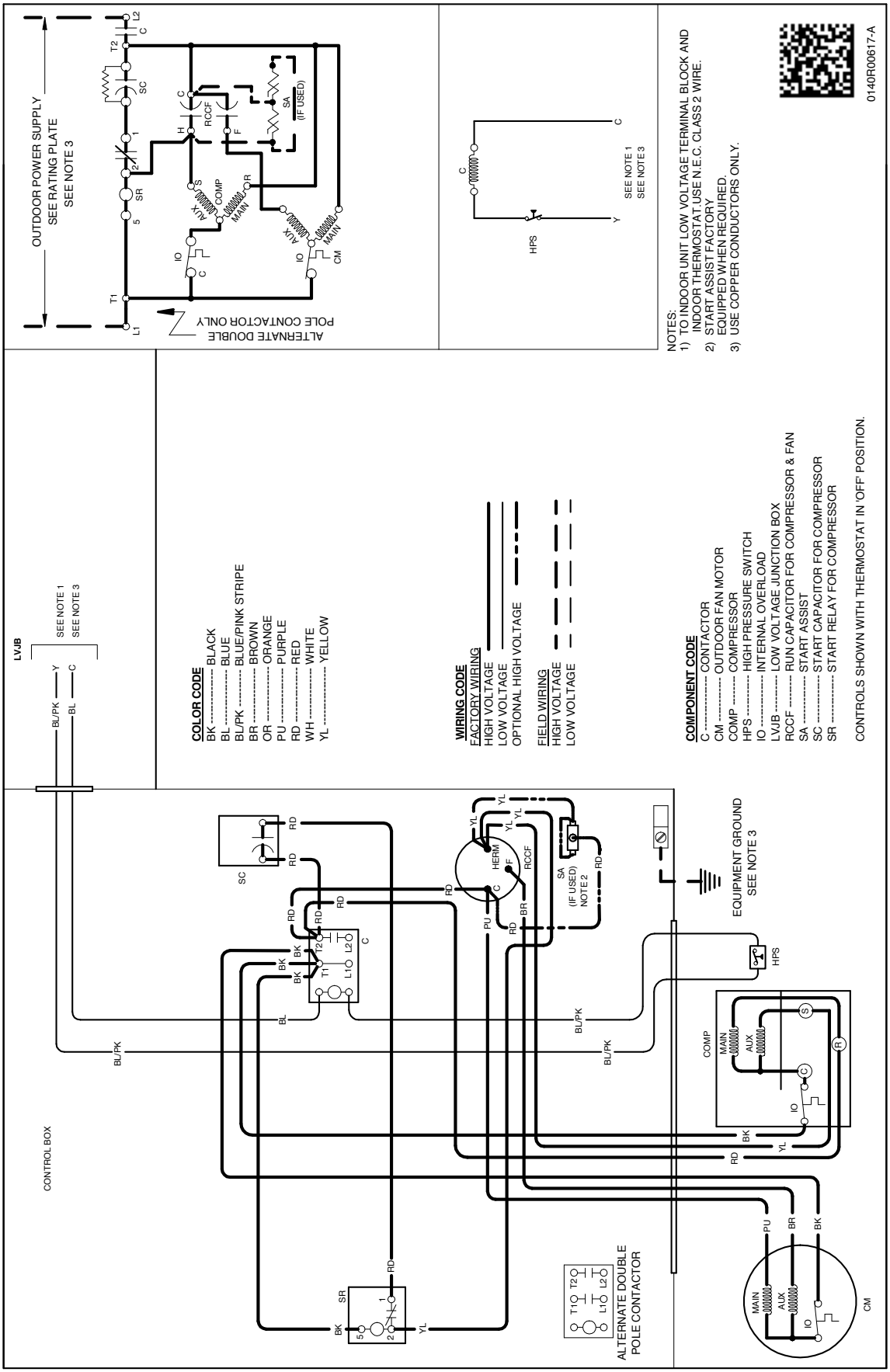

WARNING

High Voltage: Disconnect all power before servicing or installing this unit. Multiple power sources may be present. Failure to do so may cause property damage, personal injury, or death.

Wiring is subject to change. Always refer to the wiring diagram or the unit for the most up-to-date wiring.

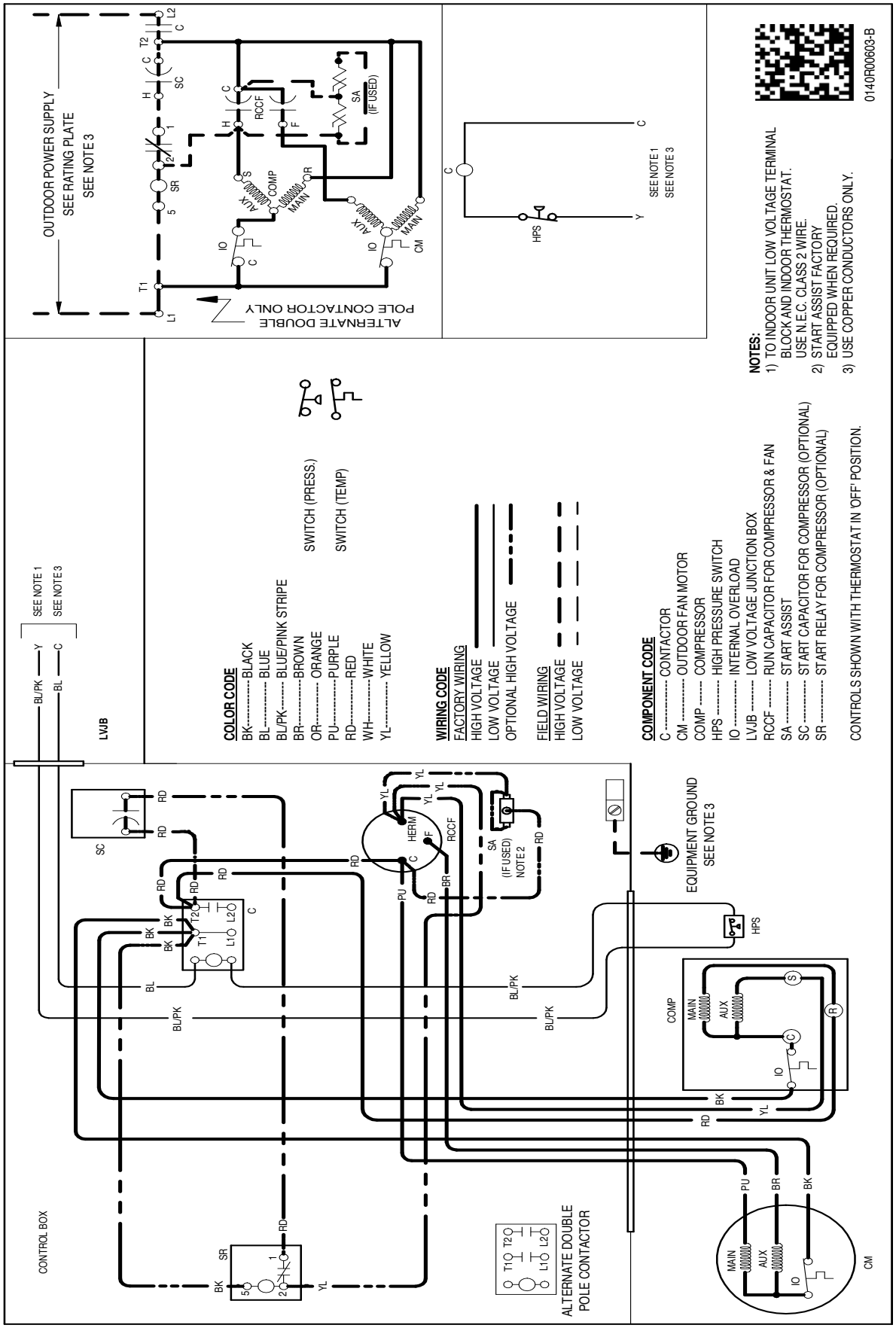

WARNING

High Voltage: Disconnect all power before servicing or installing this unit. Multiple power sources may be present. Failure to do so may cause property damage, personal injury, or death.

Wiring is subject to change. Always refer to the wiring diagram or the unit for the most up-to-date wiring.

MODEL	DESCRIPTION	GLXS3BN 1810A*	GLXS3BN 2410A*	GLXS3BN 3010A*	GLXS3BN 3610A*	GLXS3BN 4210A*	GLXS3BN4 810A*	GLXS3BN 6010A*
0161R00128	Neutral Circular Cap	X	X	X	X	X	X	X
ABK-20	Anchor Bracket Kit ^	X	X	X	X	X	X	X
ASC01A	Anti-Short Cycle Kit	X	X	X	X	X	X	X
Factory Installed Hard Start Kit		X	X	X				
CSR-U-1	Hard-start Kit				X	X	X	X
FSK01A[1]	Freeze Protection Kit	X	X	X	X	X	X	X
LSK02A[2]	Liquid Line Solenoid Kit	X	X	X	X	X	X	X
LAKT01	Low-Ambient Kit	X	X	X	X	X	X	X
0130R00000S	Low-Pressure Switch Kit	X	X	X	X	X	X	X

^ Contains 20 brackets; four brackets needed to anchor unit to pad

[1] Installed on indoor coil

[2] Condensing units and heat pumps with reciprocating or rotary compressors require the use of start-assist components when used in conjunction with an indoor coil using a non-bleed thermal expansion valve refrigerant metering device or liquid line solenoid kit. The TXV should always be sized based on the tonnage of the outdoor unit.

All AHRI system ratings are accessible in the System Configurator tool via PartnerLink.

Our continuing commitment to quality products may mean a change in specifications without notice.
©**2026 DAIKIN COMFORT TECHNOLOGIES MANUFACTURING, INC.** • Houston, Texas.