Goodman
Air Conditioning & Heating

INDOOR COILS

CAUF/(A), CAPF/(A), CAPT, CHPF, AND CSCF

CASED, PAINTED UPFLOW/DOWNFLOW, UNCASED UPFLOW/DOWNFLOW, HORIZONTAL "A", AND HORIZONTAL SLAB

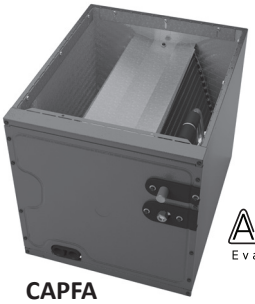

CAPFA
Cased

AlumaFin7 Evaporator Coil

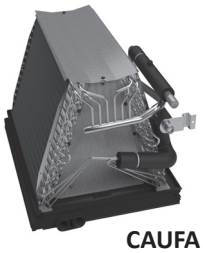

CAUFA
Uncased

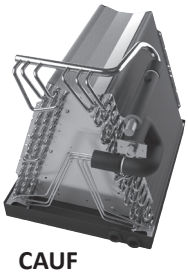

CAUF
Uncased

CAPF
Cased

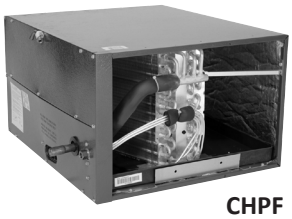

CHPF
Horizontal "A"

CAPT
Cased with Internal TXV

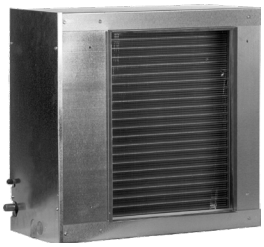

CSCF
Horizontal Slab

Note: Do not use these coils on oil furnaces or any applications where the temperature on the drain pan may exceed 300°F. If these coils are applied with an oil furnace or another application where high temperatures threaten or jeopardize the durability of the drain pan, you must replace the factory-installed drain pan with a high-temperature drain pan. High-temperature drain pan kits are available as field-installed accessories.

Standard Features

- All-Aluminum evaporator coil
- Optimized for use with R-410A refrigerant
- Some models suitable for use with R-410A or R-22 refrigerant
- CAPT models feature factory-installed thermal expansion valves for cooling and heat pump applications
- Check flowrator for cooling and heat pump applications
- Vertical and horizontal models available
- 21" depth for easier attic access
- Foil-faced insulation covers the internal casing to reduce cabinet condensation
- Galvanized, leather grain-embossed finish
- Rust resistant, thermoplastic drain pans featuring a low water-retention design
- DecaBDE-free thermoplastic drain pan with secondary drain connections
- UV-resistant drain pan
- AHRI certified; ETL listed

10 YEAR PARTS LIMITED WARRANTY*

Intertek

ALL ALUMINUM COIL

AHRI CERTIFIED® www.ahridirectory.org

COMPANY WITH ENVIRONMENTAL SYSTEM CERTIFIED BY DNV GL = ISO 14001 =

COMPANY WITH QUALITY SYSTEM CERTIFIED BY DNV GL = ISO 9001 =

BBB ACCREDITED BUSINESS

* Complete warranty details available from your local dealer or at www.goodmanmfg.com. To receive the 10-Year Parts Limited Warranty, online registration must be completed within 60 days of installation. Online registration is not required in California or Quebec.

C	A	U	F	1824	A	6	AA
1	2	3	4	5,6,7,8	9	10	11,12

Product Category
C- Indoor Coil

Application
A- Upflow/Downflow Coil
H- Horizontal A Coil
S- Horizontal Slab Coil

Cabinet Finish
U- Uncased C- Unpainted
P- Painted

Expansion Device
F- Flowrator
T- TXV

Engineering
Major/Minor Revisions

Refrigerant
6- R-22 / R-410A
2- R-22
4- R-410A

Nominal Width for Gas Furnace
A- Fits 14" Furnace Cabinet
B- Fits 17½" Furnace Cabinet
C- Fits 21" Furnace Cabinet
N- Does Not Apply (horizontal slab coil)

Nominal Capacity Range @ 13 SEER

1824- 1½ to 2 Tons	3642- 3 to 3½ Tons
3030- 2½ Tons	3743- 3 to 3½ Tons
3131- 2½ Tons	4860- 4 to 5 Tons
3137- 2 ½ to 3 Tons	4961- 4 to 5 Tons
3636- 3 Tons	

AlumaFin7™ Evaporator Coil

C	A	P	F	A	1 8	1 4	A	6	A	A
1	2	3	4	5	6 7	8 9	10	11	12	13

Product Category
C Indoor Coil

Application
A Upflow/Downflow
H Horizontal

Cabinet Finsih
U Uncased
P Cased- Painted
C Cased- Unpainted

Expansion Device
F Flowrater
T TXV
E Electronic Expansion Device

Coil Configuration
A A Coil
S Slab

Engineering
Major/ Minor Revisions

Refrigerant
2- R-22 only
4- R-410A only
6- R-22 or R-410A compatible

Nominal Width for Gas Furnace

A- 14" Width	D- 24.5" Width
B- 17.5" Width	N- Not Applicable (Slab Coil)
C- 21" Width	

Cased Height

14- 14" Coil	22- 22" Coil
18- 18" Coil	26- 26" Coil
	30- 30" Coil

Nominal Capacity Range

18- 1.5 Tons	30- 2.5 Tons	48- 4 Tons
24- 2 tons	36- 3 Tons	60- 5 Tons

Specifications

Model	Unit Dimensions			Nominal Tons	Connection		Piston Size*	Ship Weight (lbs)
	W	H	A		Liquid	Suction		
CAUF1824A6	13"	16¼"	13"	1½-2	⅜"	¾"	.059	18
CAUF1824B6	16½"	16⅛"	13"	1½-2	⅜"	¾"	.059	23
CAUF1824C6	20"	16⅜"	17"	1½-2	⅜"	¾"	.059	27
CAUF3030A6	13"	20 1/16"	17"	2½	⅜"	¾"	.065	25
CAUF3030B6	16½"	18¾"	17"	2½	⅜"	¾"	.065	22
CAUF3030C6	20"	17⅞"	17"	2½	⅜"	¾"	.065	25
CAUF3030D6	23"	17⅞"	17"	2½	⅜"	¾"	.065	32
CAUF3131B6	16½"	20 1/16"	17"	2½	⅜"	¾"	.068	27
CAUF3137B6	16½"	27"	25"	2½-3	⅜"	¾"	.071	53
CAUF3131C6	20"	20"	17"	2½	⅜"	¾"	.068	31
CAUF3636A6	13"	19½"	17"	3	⅜"	¾"	.071	30
CAUF3636B6	16½"	19⅜"	17"	3	⅜"	¾"	.071	25
CAUF3636C6	20"	19⅛"	17"	3	⅜"	¾"	.071	28
CAUF3636D6	23"	19⅛"	17"	3	⅜"	¾"	.071	36
CAUF3642C6	20"	19"	17"	3-3½	⅜"	¾"	.078	29
CAUF3642D6	23"	19⅞"	17"	3-3½	⅜"	¾"	.078	34
CAUF3743C6	20"	28 1/16"	25"	3-3½	⅜"	⅞"	.078	46
CAUF3743D6	23"	27⅜"	25"	3-3½	⅜"	⅞"	.078	43
CAUF4860C6	20"	28"	25"	4-5	⅜"	⅞"	.093	48
CAUF4860D6	23"	28"	25"	4-5	⅜"	⅞"	.093	39
CAUF4961C6	20"	28"	25"	4-5	⅜"	⅞"	.093	54
CAUF4961D6	23"	27"	25"	4-5	⅜"	⅞"	.093	59

* Shipped with Coil

Note: For a properly matched system and piston sizing information, refer to the piston kit chart of the corresponding outdoor unit.

Dimensions

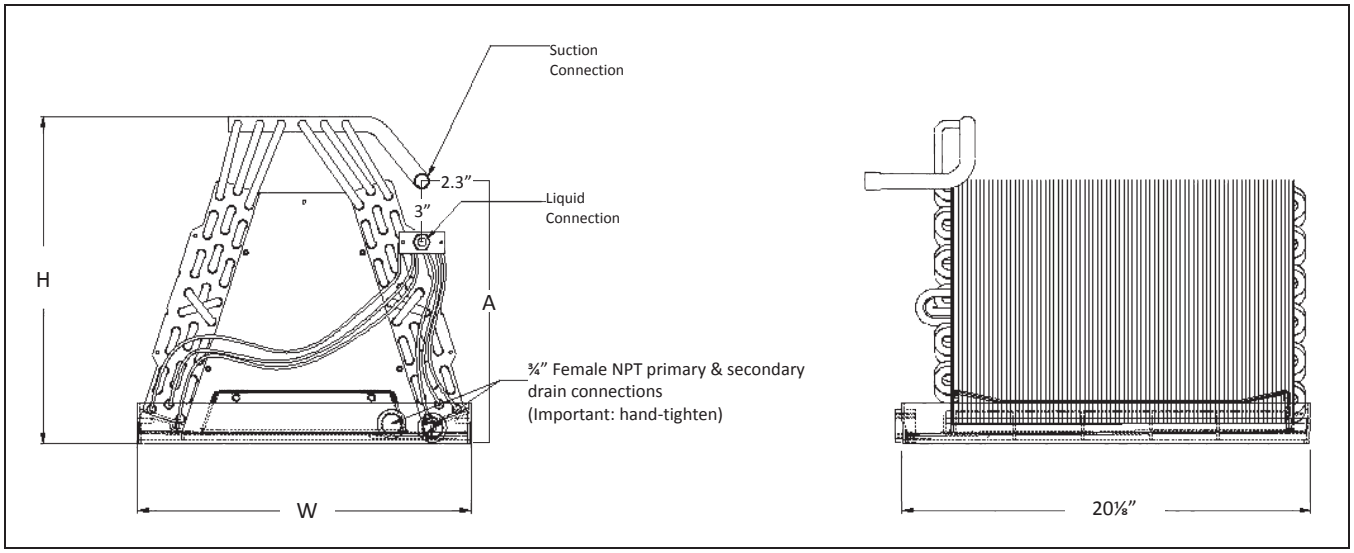

Specifications

Model	Unit Dimensions				Nominal Tons	Connection		Piston Size*	Ship Weight (lbs)
	W	D	H	A		Liquid	Suction		
CAUFA1714A6	12 ⅞"	20 ⅞"	11 ¼"	5 ⅞"	1½	3/8"	3/4"	0.051	16
CAUFA1714B6	16 ⅜"	20 ⅞"	11 ⅛"	5 ⅞"	1½	3/8"	3/4"	0.051	18
CAUFA1818A6	12 ⅞"	20 ⅞"	14 ⅝"	12 ⅞"	1½	3/8"	3/4"	0.055	18
CAUFA1818B6	16 ⅜"	20 ⅞"	14 ½"	12 ⅞"	1½	3/8"	3/4"	0.055	20
CAUFA1818C6	19 ⅞"	20 ⅞"	14 ⅜"	12 ⅞"	1½	3/8"	3/4"	0.055	26
CAUFA2318A6	12 ⅞"	20 ⅞"	14 ⅝"	12 ⅞"	2	3/8"	3/4"	0.057	18
CAUFA2318B6	16 ⅜"	20 ⅞"	14 ½"	12 ⅞"	2	3/8"	3/4"	0.057	20
CAUFA2318C6	19 ⅞"	20 ⅞"	14 ⅜"	12 ⅞"	2	3/8"	3/4"	0.057	26
CAUFA2418A6	12 ⅞"	20 ⅞"	14 ⅝"	12 ⅞"	2	3/8"	3/4"	0.057	18
CAUFA2418B6	16 ⅜"	20 ⅞"	14 ½"	12 ⅞"	2	3/8"	3/4"	0.057	20
CAUFA2418C6	19 ⅞"	20 ⅞"	14 ⅜"	12 ⅞"	2	3/8"	3/4"	0.057	26
CAUFA2422A6	12 ⅞"	20 ⅞"	18 ⅛"	16 ⅞"	2	3/8"	3/4"	0.059	26
CAUFA2422B6	16 ⅜"	20 ⅞"	17 ⅞"	16 ⅞"	2	3/8"	3/4"	0.059	28
CAUFA2422C6	19 ⅞"	20 ⅞"	17 ⅜"	16 ⅞"	2	3/8"	3/4"	0.059	30
CAUFA3022A6	12 ⅞"	20 ⅞"	18 ⅛"	16 ⅞"	2½	3/8"	3/4"	0.063	26
CAUFA3022B6	16 ⅜"	20 ⅞"	17 ⅞"	16 ⅞"	2½	3/8"	3/4"	0.063	28
CAUFA3022C6	19 ⅞"	20 ⅞"	17 ⅞"	16 ⅞"	2½	3/8"	3/4"	0.063	30
CAUFA3022D6	23 ⅜"	20 ⅞"	17 ¼"	16 ⅞"	2½	3/8"	3/4"	0.063	32
CAUFA3626B6	16 ⅜"	20 ⅞"	21"	20 ⅞"	3	3/8"	7/8"	0.065	30
CAUFA3626C6	19 ⅞"	20 ⅞"	20 ¾"	20 ⅞"	3	3/8"	7/8"	0.065	31
CAUFA3626D6	23 ⅜"	20 ⅞"	20 ⅝"	20 ⅞"	3	3/8"	7/8"	0.065	35

* Shipped with Coil

Note: For a properly matched system and piston sizing information, refer to the piston kit chart of the corresponding outdoor unit.

Dimensions

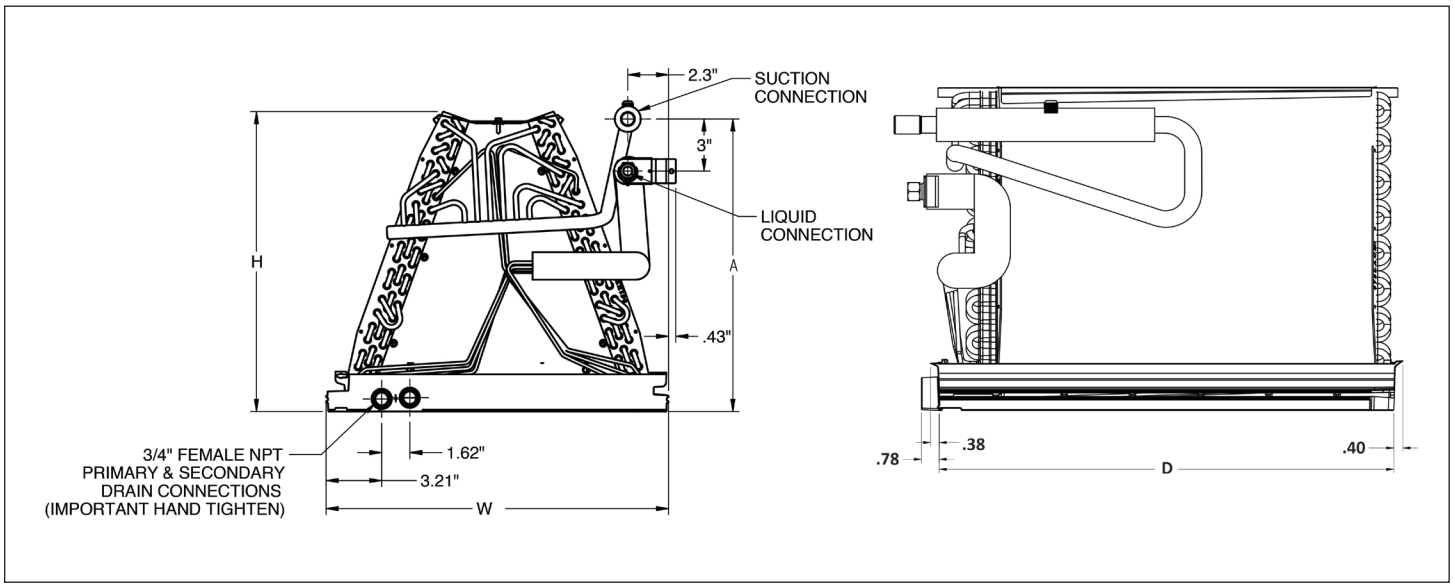

Specifications

Model	Unit Dimensions			Nominal Tons	Connection		Piston Size*	Ship Weight (lbs)
	W	D	H		Liquid	Suction		
CAPF1824A6	14"	21⅛"	18"	1½-2	⅜"	¾"	.059	32
CAPF1824B6	17½"	21⅛"	18"	1½-2	⅜"	¾"	.059	35
CAPF1824C6	21"	21⅛"	22"	1½-2	⅜"	¾"	.059	42
CAPF3030A6	14"	21⅛"	22"	2½	⅜"	¾"	.065	41
CAPF3030B6	17½"	21⅛"	22"	2½	⅜"	¾"	.065	43
CAPF3030C6	21"	21⅛"	22"	2½	⅜"	¾"	.065	44
CAPF3030D6	24½"	21⅛"	22"	2½	⅜"	¾"	.065	52
CAPF3131B6	17½"	21⅛"	22"	2½	⅜"	¾"	.068	46
CAPF3137B6	17½"	21⅛"	30"	2½-3	⅜"	¾"	.071	53
CAPF3131C6	21"	21⅛"	22"	2½	⅜"	¾"	.068	50
CAPF3636A6	14"	21⅛"	22"	3	⅜"	¾"	.071	40
CAPF3636B6	17½"	21⅛"	22"	3	⅜"	¾"	.071	44
CAPF3636C6	21"	21⅛"	22"	3	⅜"	¾"	.071	53
CAPF3636D6	24½"	21⅛"	22"	3	⅜"	¾"	.071	51
CAPF3642C6	21"	21⅛"	22"	3-3½	⅜"	¾"	.078	49
CAPF3642D6	24½"	21⅛"	22"	3-3½	⅜"	¾"	.078	52
CAPF3743C6	21"	21⅛"	30"	3-3½	⅜"	⅞"	.078	63
CAPF3743D6	24½"	21⅛"	30"	3-3½	⅜"	⅞"	.078	75
CAPF4860C6	21"	21⅛"	30"	4-5	⅜"	⅞"	.093	65
CAPF4860D6	24½"	21⅛"	30"	4-5	⅜"	⅞"	.093	68
CAPF4961C6	21"	21⅛"	30"	4-5	⅜"	⅞"	.093	73
CAPF4961D6	24½"	21⅛"	30"	4-5	⅜"	⅞"	.093	76

* Shipped with Coil

Note: For a properly matched system and piston sizing information, refer to the piston kit chart of the corresponding outdoor unit.

Dimensions

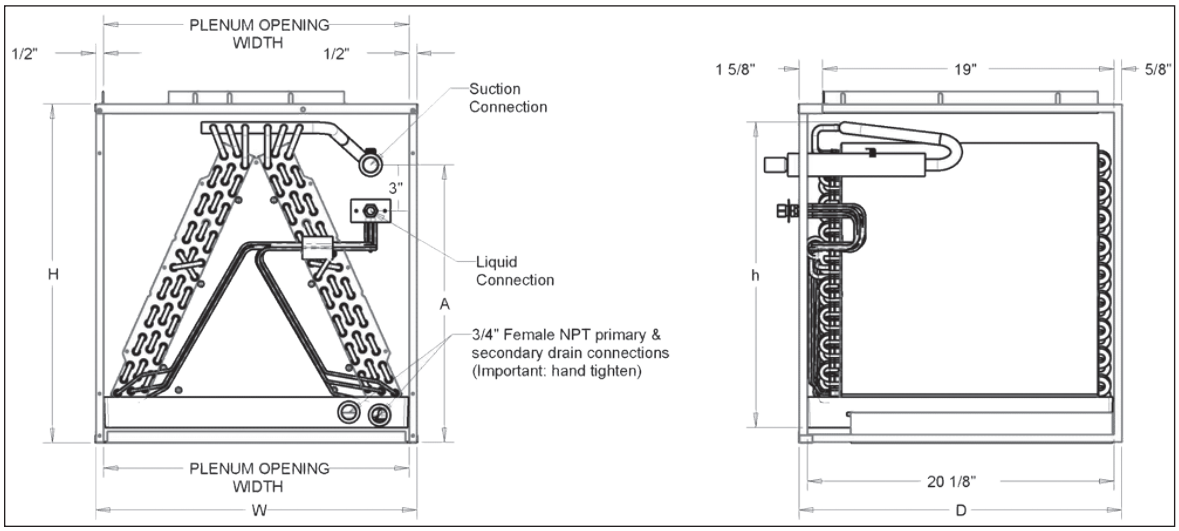

Specifications

Model	Unit Dimensions				Nominal Tons	Connection		Piston Size*	Ship Weight (lbs)
	W	D	H	A		Liquid	Suction		
CAPFA1714A6	14"	21"	14"	6"	1½	⅜"	¾"	0.051	29
CAPFA1714B6	17½"	21"	14"	6"	1½	⅜"	¾"	0.051	33
CAPFA1818A6	14"	21"	18"	14"	1½	⅜"	¾"	0.055	33
CAPFA1818B6	17½"	21"	18"	14"	1½	⅜"	¾"	0.055	38
CAPFA1818C6	21"	21"	18"	14"	1½	⅜"	¾"	0.055	43
CAPFA2318A6	14"	21"	18"	14"	2	⅜"	¾"	0.057	33
CAPFA2318B6	17½"	21"	18"	14"	2	⅜"	¾"	0.057	38
CAPFA2318C6	21"	21"	18"	14"	2	⅜"	¾"	0.057	43
CAPFA2418A6	14"	21"	18"	14"	2	⅜"	¾"	0.057	33
CAPFA2418B6	17½"	21"	18"	14"	2	⅜"	¾"	0.057	38
CAPFA2418C6	21"	21"	18"	14"	2	⅜"	¾"	0.057	43
CAPFA2422A6	14"	21"	22"	18"	2	⅜"	¾"	0.059	41
CAPFA2422B6	17½"	21"	22"	18"	2	⅜"	¾"	0.059	45
CAPFA2422C6	21"	21"	22"	18"	2	⅜"	¾"	0.059	50
CAPFA3022A6	14"	21"	22"	18"	2½	⅜"	¾"	0.063	41
CAPFA3022B6	17½"	21"	22"	18"	2½	⅜"	¾"	0.063	45
CAPFA3022C6	21"	21"	22"	18"	2½	⅜"	¾"	0.063	50
CAPFA3022D6	24½"	21"	22"	18"	2½	⅜"	¾"	0.063	52
CAPFA3626B6	17½"	21"	26"	22"	3	⅜"	⅞"	0.065	47
CAPFA3626C6	21"	21"	26"	22"	3	⅜"	⅞"	0.065	49
CAPFA3626D6	24½"	21"	26"	22"	3	⅜"	⅞"	0.065	56

* Shipped with Coil

Note: For a properly matched system and piston sizing information, refer to the piston kit chart of the corresponding outdoor unit.

Dimensions

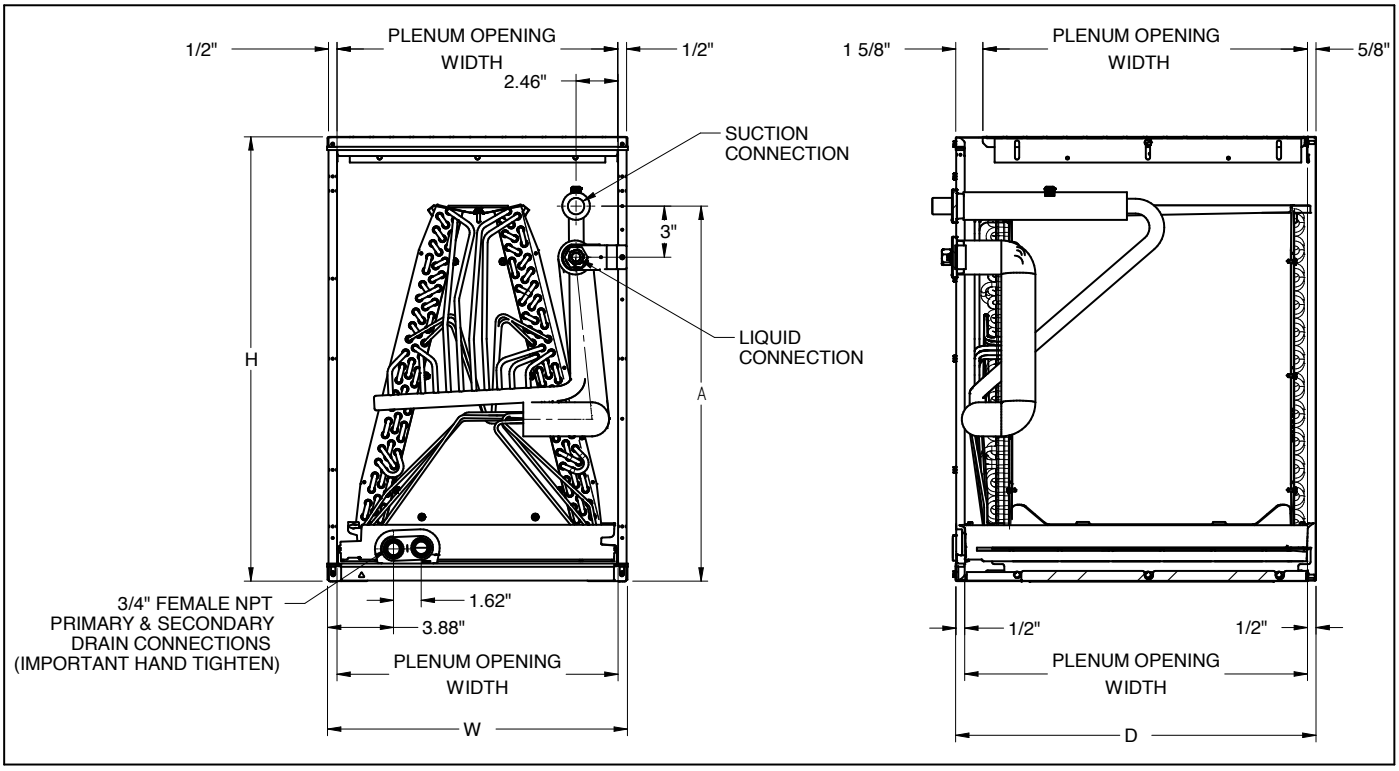

Specifications

Model	Unit Dimensions			Nominal Tons	Connection		Ship Weight (lbs)
	W	D	H		Liquid	Suction	
CAPT3131B4	17½"	21"	22"	2½	⅜"	¾"	46
CAPT3131C4	21"	21"	22"	2½	⅜"	¾"	50
CAPT3743C4	21"	21"	30"	3-3½	⅜"	⅞"	63
CAPT3743D4	24½"	21"	30"	3-3½	⅜"	⅞"	75
CAPT4961C4	21"	21"	30"	4-5	⅜"	⅞"	73
CAPT4961D4	24½"	21"	30"	4-5	⅜"	⅞"	76

Dimensions

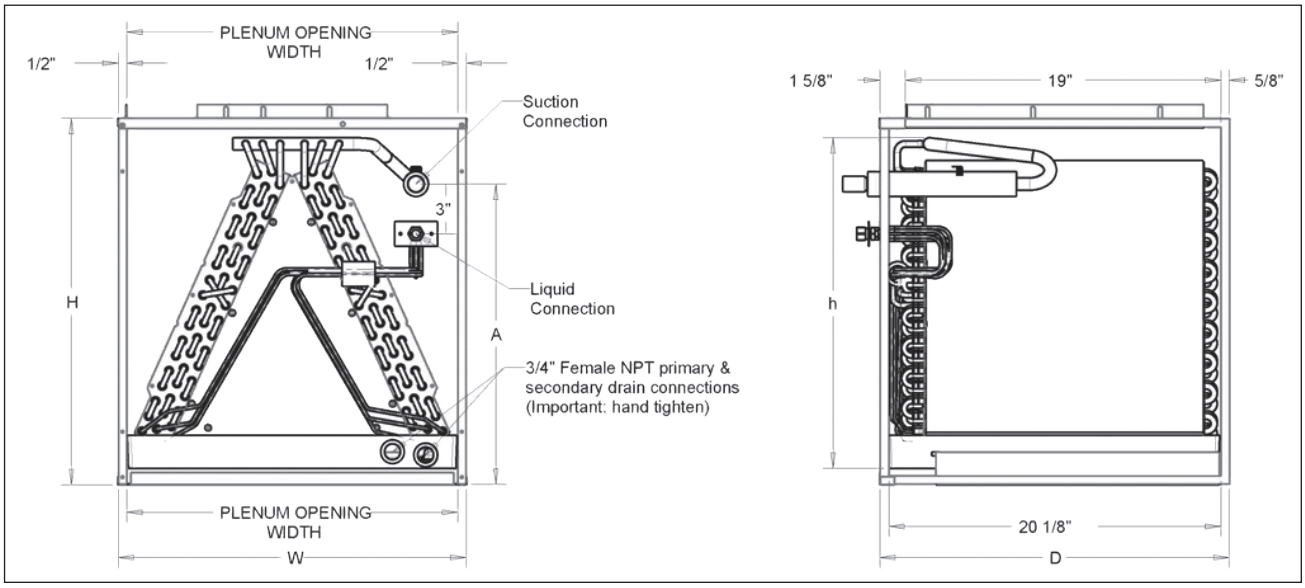

Specifications

Model	Cabinet Dimensions			Plenum		Nominal Tons	Connection		Piston Size[2]	Ship Weight (lbs)
	D	W	H	D	H		Liquid	Suction		
CHPF1824A6	21⅛"	26"	14"	19"	13"	1½-2	⅜"	¾"	.059	36
CHPF2430B6	21⅛"	26"	17½"	19"	16½"	2-2½	⅜"	¾"	.065	55
CHPF3636B6	21⅛"	26"	17½"	19"	16½"	3	⅜"	¾"	.074	50
CHPF3642C6	21⅛"	26"	21"	19"	20"	3-3½	⅜"	¾"	.076	63
CHPF3743C6	21⅛"	26"	21"	19"	20"	3-3½	⅜"	⅞"	.076	63
CHPF4860D6	21⅛"	26"	24½"	19"	23½"	4-5	⅜"	⅞"	.093	77

[1] (ft^2)

[2] Shipped with Coil

Note: For a properly matched system and piston sizing information, refer to the piston kit chart of the corresponding outdoor unit.

Dimensions

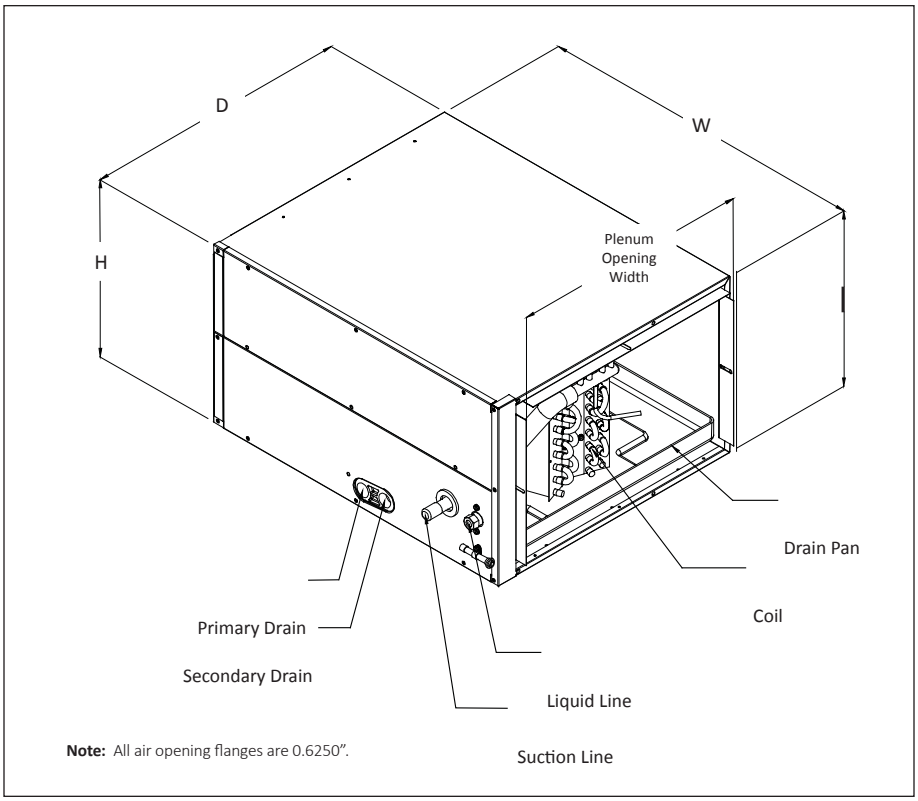

Specifications

Model	Capacity (Tons)	Evap Coil Face Area[1]	Connection Size		Piston Size[2]	Ship Weight (lbs)
			Liquid	Suction		
CSCF1824N6	1½-2	3⅓	⅜"	¾"	.059	43
CSCF3036N6	2½-3	4⅔	⅜"	⅞"	.074	52.5
CSCF3642N6	3-3½	5⅔	⅜"	⅞"	.078	43
CSCF4860N6	4-5	5⅔	⅜"	⅞"	.093	60

[1] (ft^2)

[2] Shipped with Coil

Note: For a properly matched system and piston sizing information, refer to the piston kit chart of the corresponding outdoor unit.

Dimensions

Model	Unit Dimensions			Plenum Opening	
	D (A)	W	H	D (B)	H
CSCF1824N6	25½"	12"	25"	16"	21"
CSCF3036N6	33½"	12"	25"	24"	21"
CSCF3642N6	39½"	12"	25"	30"	21"
CSCF4860N6	39½"	12"	25"	30"	21"

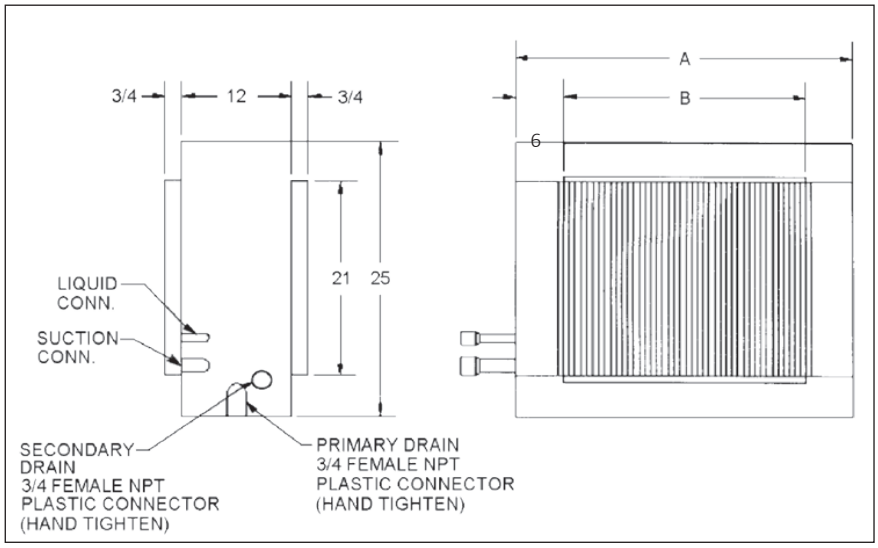

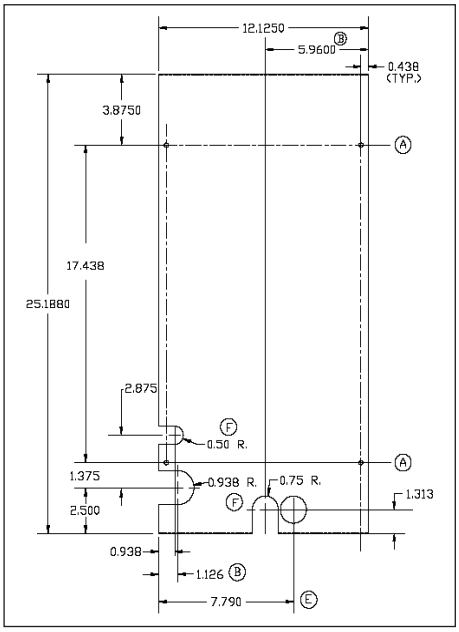

Detail of Access Door

Air Quantity (SCFM) vs. Pressure Drop (IN. WC)

	SCFM	400	500	600	700	800	900	1000	1100	1200	1300	1400	1500
CA*FA1714A6*	Wet	0.120	0.180	0.250	0.330	0.410	0.500	0.600	0.710	0.820	---	---	---
	Dry	0.100	0.150	0.200	0.270	0.340	0.420	0.520	0.610	0.720	---	---	---
CA*FA1714B6*	Wet	0.100	0.150	0.210	0.280	0.340	0.420	0.500	0.580	0.660	---	---	---
	Dry	0.080	0.130	0.170	0.230	0.290	0.360	0.420	0.500	0.650	---	---	---
CA*FA1818A6*/ CA*FA2318A6*	Wet	0.110	0.160	0.220	0.290	0.370	0.460	0.550	0.650	0.760	0.830	0.950	1.080
	Dry	0.074	0.100	0.132	0.168	0.220	0.264	0.317	0.377	0.434	0.503	0.584	0.667
CA*FA1818B6*/ CA*FA2318B6*	Wet	0.100	0.140	0.190	0.250	0.310	0.380	0.450	0.530	0.610	0.670	0.770	0.870
	Dry	0.066	0.087	0.115	0.144	0.175	0.218	0.260	0.301	0.347	0.401	0.460	0.521
CA*FA1818C6/ CA*FA2318C6*	Wet	0.093	0.130	0.172	0.221	0.275	0.335	0.400	0.471	0.548	0.631	0.719	0.813
	Dry	0.064	0.086	0.110	0.139	0.170	0.205	0.243	0.284	0.328	0.376	0.427	0.481
CA*F1824A6*	Wet	0.071	0.099	0.142	0.183	0.230	0.280	0.331	0.389	---	---	---	---
	Dry	0.062	0.090	0.122	0.154	0.189	0.231	0.278	0.331	0.390	---	---	---
CA*F1824B6*	Wet	0.021	0.032	0.049	0.071	0.089	0.120	0.128	0.159	0.190	---	---	---
	Dry	0.011	0.022	0.029	0.041	0.052	0.069	0.078	0.101	0.120	---	---	---
CA*F1824C6*	Wet	0.017	0.025	0.043	0.061	0.079	0.107	0.114	0.140	0.164	---	---	---
	Dry	0.011	0.017	0.024	0.035	0.044	0.063	0.075	0.094	0.113	---	---	---
CA*FA1818C6*	Wet	0.093	0.130	0.172	0.221	0.275	0.335	0.400	0.471	0.548	0.631	0.719	0.813
	Dry	0.064	0.086	0.110	0.139	0.170	0.205	0.243	0.284	0.328	0.376	0.427	0.481
	SCFM	**400**	**500**	**600**	**700**	**800**	**900**	**1000**	**1100**	**1200**	**1300**	**1400**	**1500**
CA*FA2422A6*	Wet	0.091	0.128	0.181	0.240	0.304	0.374	0.454	0.541	0.635	0.733	0.837	0.958
	Dry	0.084	0.112	0.148	0.191	0.241	0.299	0.366	0.440	0.522	0.611	0.704	0.803
CA*FA2422B6*	Wet	0.084	0.117	0.155	0.199	0.249	0.304	0.364	0.430	0.502	0.578	0.661	0.748
	Dry	0.055	0.077	0.102	0.130	0.162	0.196	0.234	0.276	0.320	0.368	0.419	0.473
CA*FA2422C6*	Wet	0.064	0.091	0.120	0.153	0.189	0.228	0.269	0.314	0.361	0.411	0.464	0.520
	Dry	0.055	0.074	0.095	0.119	0.146	0.175	0.207	0.242	0.280	0.320	0.363	0.408
	SCFM	**400**	**500**	**600**	**700**	**800**	**900**	**1000**	**1100**	**1200**	**1300**	**1400**	**1500**
CA*FA3022A6*	Wet	0.091	0.128	0.181	0.240	0.304	0.374	0.454	0.541	0.635	0.733	0.837	0.958
	Dry	0.084	0.112	0.148	0.191	0.241	0.299	0.366	0.440	0.522	0.611	0.704	0.803
CA*FA3022B6*	Wet	0.084	0.117	0.155	0.199	0.249	0.304	0.364	0.430	0.502	0.578	0.661	0.748
	Dry	0.055	0.077	0.102	0.130	0.162	0.196	0.234	0.276	0.320	0.368	0.419	0.473
CA*FA3022C6*	Wet	0.064	0.091	0.120	0.153	0.189	0.228	0.269	0.314	0.361	0.411	0.464	0.520
	Dry	0.055	0.074	0.095	0.119	0.146	0.175	0.207	0.242	0.280	0.320	0.363	0.408
CA*FA3022D6*	Wet	0.064	0.089	0.118	0.149	0.184	0.222	0.262	0.306	0.353	0.402	0.455	0.511
	Dry	0.055	0.072	0.092	0.114	0.139	0.167	0.198	0.231	0.267	0.306	0.348	0.392
	SCFM	**400**	**500**	**600**	**700**	**800**	**900**	**1000**	**1100**	**1200**	**1300**	**1400**	**1500**
CA*FA3626B6*	Wet	0.067	0.085	0.109	0.136	0.167	0.203	0.244	0.288	0.337	0.390	0.447	0.508
	Dry	0.045	0.061	0.080	0.103	0.130	0.159	0.193	0.229	0.269	0.313	0.360	0.410
CA*FA3626C6*	Wet	0.057	0.079	0.103	0.132	0.163	0.199	0.237	0.280	0.325	0.374	0.427	0.483
	Dry	0.041	0.056	0.072	0.091	0.112	0.134	0.159	0.185	0.214	0.245	0.277	0.312
CA*FA3626D6*	Wet	0.055	0.076	0.099	0.124	0.152	0.182	0.215	0.250	0.288	0.328	0.370	0.415
	Dry	0.042	0.055	0.070	0.088	0.108	0.130	0.154	0.180	0.208	0.239	0.271	0.306
	SCFM	**600**	**700**	**800**	**900**	**1000**	**1100**	**1200**	**1300**	**1400**	**1500**		
CA*F3030A6*	Wet	0.151	0.173	0.204	0.238	0.267	0.281	0.326	0.380	0.406	0.451	---	---	---
	Dry	0.069	0.083	0.117	0.132	0.148	0.183	0.206	0.239	0.290	0.338	---	---	---
CA*F3030B6*	Wet	0.090	0.120	0.150	0.180	0.210	0.240	0.280	0.330	0.370	0.420	---	---	---
	Dry	0.080	0.100	0.130	0.150	0.180	0.210	0.250	0.280	0.320	0.360	---	---	---
CA*F3030C6*	Wet	0.071	0.087	0.120	0.134	0.155	0.180	0.209	0.249	0.284	0.328	---	---	---
	Dry	0.050	0.067	0.098	0.113	0.135	0.169	0.189	0.213	0.245	0.275	---	---	---
CA*F3030D6*	Wet	0.069	0.078	0.090	0.108	0.136	0.168	0.206	0.244	0.288	0.337	---	---	---
	Dry	0.029	0.043	0.070	0.082	0.098	0.125	0.141	0.153	0.177	0.200	---	---	---

Air Quantity (SCFM) vs. Pressure Drop (IN. WC)

	SCFM	600	700	800	900	1000	1100	1200	1300	1400	1500	1600			
CA*F3131B26*	Wet	0.041	0.049	0.061	0.078	0.090	0.113	0.131	0.140	0.162	0.178	0.210	---	---	---
	Dry	0.021	0.031	0.039	0.048	0.061	0.072	0.079	0.091	0.110	0.122	0.141	---	---	---
CA*F3131C6*	Wet	0.035	0.036	0.038	0.051	0.059	0.073	0.087	0.094	0.110	0.125	0.145	---	---	---
	Dry	0.014	0.022	0.028	0.036	0.045	0.054	0.061	0.068	0.081	0.091	0.108	---	---	---

	SCFM	600	700	800	900	1000	1100	1200	1300	1400	1500	1600	1700	1800	1900	2000	2100	
CA*F3137B6*	Wet	0.090	0.110	0.140	0.170	0.200	0.230	0.270	0.300	0.350	0.390	0.440	0.5	0.550	0.620	0.670	0.740	---
	Dry	0.080	0.100	0.130	0.160	0.190	0.220	0.250	0.290	0.340	0.380	0.430	0.48	0.530	0.590	0.660	0.710	---

	SCFM	600	700	800	900	1000	1100	1200	1300	1400	1500	1600	1700	1800	1900	2000	2100	2200
CA*F3636A6*	Wet	0.135	0.170	0.220	0.280	0.310	0.380	0.450	0.530	0.610	0.690	0.790	0.870	0.910	0.950	1.030	1.130	1.190
	Dry	0.130	0.160	0.200	0.230	0.280	0.320	0.380	0.450	0.520	0.590	0.670	0.710	0.790	0.870	0.970	1.060	1.160
CA*F3636B6*	Wet	0.115	0.135	0.170	0.180	0.220	0.260	0.300	0.350	0.400	0.460	0.520	0.570	0.600	0.660	0.720	0.790	0.850
	Dry	0.110	0.130	0.160	0.170	0.210	0.240	0.270	0.330	0.370	0.420	0.470	0.520	0.550	0.610	0.660	0.720	0.770
CA*F3636C6*	Wet	0.100	0.120	0.160	0.170	0.210	0.250	0.290	0.340	0.380	0.430	0.480	0.540	0.550	0.610	0.670	0.720	0.780
	Dry	0.090	0.110	0.130	0.140	0.160	0.180	0.220	0.250	0.280	0.320	0.350	0.370	0.410	0.450	0.490	0.530	0.570
CA*F3636D6*	Wet	0.095	0.115	0.140	0.150	0.170	0.200	0.230	0.270	0.310	0.350	0.390	0.430	0.460	0.500	0.560	0.620	0.660
	Dry	0.090	0.110	0.130	0.140	0.160	0.190	0.220	0.240	0.270	0.300	0.340	0.380	0.410	0.440	0.490	0.530	0.580

	SCFM	600	700	800	900	1000	1100	1200	1300	1400	1500	1600	1700	1800	1900			
CA*F3642C6*	Wet	0.075	0.090	0.110	0.120	0.140	0.170	0.200	0.230	0.260	0.290	0.330	0.360	0.380	0.420	---	---	---
	Dry	0.070	0.080	0.100	0.110	0.130	0.150	0.170	0.200	0.230	0.250	0.280	0.310	0.330	0.370	---	---	---
CA*F3642D6*	Wet	0.070	0.090	0.110	0.124	0.140	0.160	0.190	0.210	0.240	0.270	0.300	0.330	0.350	0.380	---	---	---
	Dry	0.060	0.080	0.090	0.100	0.110	0.130	0.150	0.170	0.190	0.220	0.240	0.260	0.280	0.300	---	---	---

	SCFM	800	900	1000	1100	1200	1300	1400	1500	1600	1700	1800	1900	2000	2100			
CA*F3743C6*	Wet	0.083	0.093	0.113	0.133	0.143	0.163	0.183	0.213	0.243	0.263	0.293	0.323	0.353	0.383	---	---	---
	Dry	0.073	0.083	0.103	0.113	0.133	0.153	0.163	0.193	0.213	0.233	0.263	0.293	0.313	0.343	---	---	---
CA*F3743D6*	Wet	0.074	0.080	0.089	0.107	0.120	0.129	0.138	0.169	0.188	0.209	0.229	0.251	0.273	0.279	---	---	---
	Dry	0.046	0.056	0.074	0.076	0.086	0.107	0.110	0.126	0.147	0.160	0.176	0.196	0.210	0.230	---	---	---

	SCFM	1000	1100	1200	1300	1400	1500	1600	1700	1800	1900	2000	2100	2200			
CA*F4860C6*	Wet	0.167	0.191	0.219	0.244	0.266	0.299	0.355	0.370	0.413	0.454	0.498	0.586	0.643	---	---	---
	Dry	0.160	0.177	0.194	0.206	0.246	0.264	0.264	0.265	0.290	0.309	0.364	0.389	0.604	---	---	---
CA*F4860D6*	Wet	0.138	0.156	0.177	0.196	0.226	0.247	0.275	0.298	0.327	0.349	0.395	0.460	0.487	---	---	---
	Dry	0.126	0.138	0.157	0.176	0.187	0.200	0.205	0.210	0.230	0.250	0.280	0.300	0.419	---	---	---

	SCFM	1000	1100	1200	1300	1400	1500	1600	1700	1800	1900	2000	2100	2200			
CA*F4961C6*	Wet	0.209	0.233	0.255	0.286	0.308	0.341	0.397	0.412	0.455	0.496	0.540	0.628	0.643	---	---	---
	Dry	0.202	0.219	0.236	0.248	0.288	0.306	0.306	0.307	0.332	0.351	0.406	0.431	0.604	---	---	---
CA*F4961D6*	Wet	0.140	0.158	0.179	0.198	0.228	0.249	0.277	0.300	0.329	0.351	0.397	0.462	0.487	---	---	---
	Dry	0.128	0.140	0.159	0.178	0.189	0.202	0.206	0.212	0.232	0.252	0.282	0.302	0.419	---	---	---

AIRFLOW DATA FOR CAPT & CSCF

AIR QUANTITY (SCFM) VS. PRESSURE DROP (IN. WC)

CAPT

	SCFM	600	700	800	900	1000	1100	1200	1300	1400	1500	1600
CAPT3131B4*	Wet	0.041	0.049	0.061	0.078	0.090	0.113	0.131	0.140	0.162	0.178	0.210
	Dry	0.021	0.031	0.039	0.048	0.061	0.072	0.079	0.091	0.110	0.122	0.141
CAPT3131C4*	Wet	0.035	0.036	0.038	0.051	0.059	0.073	0.087	0.094	0.110	0.125	0.145
	Dry	0.014	0.022	0.028	0.036	0.045	0.054	0.061	0.068	0.081	0.091	0.108

	SCFM	800	900	1000	1100	1200	1300	1400	1500	1600	1700	1800	1900	2000	2100	2200
CAPT3743C4*	Wet	0.083	0.093	0.113	0.133	0.143	0.163	0.183	0.213	0.243	0.263	0.293	0.323	0.353	0.383	0.423
	Dry	0.073	0.083	0.103	0.113	0.133	0.153	0.163	0.193	0.213	0.233	0.263	0.293	0.313	0.343	0.373
CAPT3743D4*	Wet	0.074	0.080	0.089	0.107	0.120	0.129	0.138	0.169	0.188	0.209	0.229	0.251	0.273	0.279	0.306
	Dry	0.046	0.056	0.070	0.076	0.086	0.107	0.110	0.126	0.147	0.160	0.176	0.196	0.210	0.230	0.253

	SCFM	1000	1100	1200	1300	1400	1500	1600	1700	1800	1900	2000	2100	2200
CAPT4961C4*	Wet	0.209	0.233	0.255	0.286	0.308	0.341	0.397	0.412	0.455	0.496	0.540	0.628	0.643
	Dry	0.202	0.219	0.236	0.248	0.288	0.300	0.306	0.315	0.332	0.351	0.406	0.431	0.604
CAPT4961D4*	Wet	0.140	0.158	0.179	0.198	0.228	0.249	0.277	0.300	0.329	0.351	0.397	0.462	0.487
	Dry	0.128	0.140	0.159	0.178	0.189	0.202	0.206	0.212	0.232	0.252	0.282	0.302	0.419

CSCF

	SCFM	500	600	700	800	900	1000	1100	1200
CSCF1824N6D*	Wet	0.104	0.143	0.176	0.212	0.255	0.292	0.321	0.344
	Dry	0.048	0.067	0.086	0.108	0.132	0.159	0.186	0.206

	SCFM	---	---	700	800	900	1000	1100	1200	1300	1400
CSCF3036N6D*	Wet	---	---	0.062	0.076	0.092	0.109	0.131	0.156	0.186	0.209
	Dry	---	---	0.032	0.043	0.055	0.068	0.082	0.099	0.114	0.131

	SCFM	---	---	---	800	900	1000	1100	1200	1300	1400	1500	1600	1700	1800	1900	2000	2100	2200
CSCF3642N6D*	Wet	---	---	---	0.045	0.063	0.081	0.099	0.116	0.132	0.148	0.166	0.183	0.202	0.220	0.236	0.259	0.278	0.291
	Dry	---	---	---	0.039	0.051	0.064	0.077	0.092	0.105	0.121	0.138	0.150	0.175	0.191	0.214	0.230	0.251	0.262

	SCFM				800	900	1000	1100	1200	1300	1400	1500	1600	1700	1800	1900	2000	2100	2200
CSCF4860N6D*	Wet	---	---	---	0.051	0.068	0.085	0.103	0.120	0.137	0.154	0.173	0.192	0.212	0.233	0.255	0.278	0.299	0.319
	Dry	---	---	---	0.043	0.056	0.069	0.084	0.099	0.115	0.132	0.149	0.167	0.185	0.207	0.227	0.249	0.272	.282**

** Maximum SCFM = 2146

Air Quantity (SCFM) vs. Pressure Drop (IN. WC)

	SCFM	600	700	800	900	1000	1100	1200	1300	1400
CHPF 1824A6*	Wet	0.132	0.179	0.222	0.272	0.327	0.381	0.456	0.522	0.605
	Dry	0.126	0.165	0.206	0.249	0.302	0.354	0.414	0.478	0.563

	SCFM	600	700	800	900	1000	1100	1200	1300	1400	1500	1600
CHPF 2430B6*	Wet	0.106	0.124	0.152	0.184	0.218	0.258	0.301	0.350	0.406	0.460	0.514
	Dry	0.101	0.122	0.145	0.174	0.209	0.247	0.288	0.333	0.381	0.428	0.484

	SCFM	600	700	800	900	1000	1100	1200	1300	1400	1500	1600
CHPF 3636B6*	Wet	0.107	0.131	0.167	0.199	0.239	0.291	0.338	0.389	0.439	0.494	0.552
	Dry	0.102	0.126	0.152	0.184	0.220	0.259	0.303	0.349	0.401	0.458	0.516

	SCFM	800	900	1000	1100	1200	1300	1400	1500	1600	1700	1800	1900	2000	2100	2200
CHPF 3642C6*	Wet	0.083	0.103	0.126	0.151	0.178	0.208	0.240	0.274	0.310	0.346	0.383	---	---	---	---
	Dry	0.073	0.096	0.120	0.144	0.169	0.196	0.224	0.254	0.286	0.319	0.354	---	---	---	---

	SCFM	800	900	1000	1100	1200	1300	1400	1500	1600	1700	1800	1900	2000	2100	2200
CHPF 3743C6*	Wet	0.133	0.153	0.176	0.201	0.228	0.258	0.290	0.324	0.360	0.396	0.433	---	---	---	---
	Dry	0.123	0.146	0.170	0.194	0.219	0.246	0.274	0.304	0.336	0.369	0.404	---	---	---	---

	SCFM	900	1000	1100	1200	1300	1400	1500	1600	1700	1800	1900	2000	2100	2200
CHPF 4860D6*	Wet	0.111	0.131	0.151	0.171	0.191	0.211	0.231	0.261	0.291	0.321	0.361	0.391	0.431	0.471
	Dry	0.101	0.121	0.141	0.161	0.181	0.201	0.221	0.251	0.281	0.311	0.341	0.371	0.411	0.441

Expansion Valve Kits for Non-TXV Coils

Kit Number	Description	Application	Refrigerant	Tonnage: Outdoor Unit
TXV-30[2]	Non-bleed Valve	AC Only	R-410A	1½- 2½ Ton
TXV-42[2]	Non-bleed Valve	AC Only	R-410A	3- 3½ Ton
TXV-48[2]	Non-bleed Valve	AC Only	R-410A	4 Ton
TXV-60[2]	Non-bleed Valve	AC Only	R-410A	5 Ton
TX2N4A	Non-bleed Valve	AC or HP	R-410A	1½- 2 Ton
TX3N4	Non-bleed Valve	AC or HP	R-410A	2½- 3 Ton
TX5N4	Non-bleed Valve	AC or HP	R-410A	3½- 5 Ton

Note: Condensing units and heat pumps with reciprocating compressors require the use of start-assist components when used in conjunction with an indoor coil using a non-bleed thermal expansion valve refrigerant metering device.

High-Temp Drain Pan Kits

Drain Pan Kits	Furnace Size
HTP-A	14” furnaces
HTP-B	17½” furnaces
HTP-C	21” furnaces
HTP-D	24½” furnaces

Goodman Manufacturing Company, L.P., reserves the right to discontinue, or change at any time, specifications or designs without notice or without incurring obligations. ©2019 Goodman Manufacturing Company, L.P. • Houston, Texas • Printed in the USA.