Goodman
Air Conditioning & Heating

AWVE Series

Wall Mount, Variable Speed, ECM-Based Air Handler With Internal EEV, Communicating For Side Discharge Matchup 1 To 3 Tons

Contents

Nomenclature 2
Heat Kit Nomenclature.....2
Product Specifications 3
Dimensions 4
Airflow Data 6
Wiring Diagram 7
Accessories 9

R32

Product Features

- Electronic Expansion Valve (EEV) for cooling and heat pump applications
- Optimized for use with R-32 refrigerant AHRI certified; ETL listed
- Factory installed R-32 sensor designed for the lifespan of the coil
- Variable-speed ECM blower motor provides constant CFM over a wide range of static pressure conditions independent of duct system
- Compatible with Goodman brand smart thermostat and other Daikin brand communicating thermostats
- Aluminum tubing coils on all models
- Cabinet air leakage less than 2.0% at 1.0 inch H_2O when tested in accordance with ASHRAE standard 193
- Cabinet air leakage less than 1.4% at 0.5 inch H_2O when tested in accordance with ASHRAE standard 193
- UL 60335 2-40 Compliant
- Fault recall of six most recent faults
- Thermoplastic drain pan with bottom primary and secondary drain connections
- Built-in filter rack (filter included)
- Large chassis (2½- and 3-ton units) – front return only
- Small chassis (1, 1½ and 2 ton units) – front or bottom return
- Wall-hanging bracket provided
- Field installed 3 kW electric heater kit option available for large chassis only

10 YEAR PARTS LIMITED WARRANTY*

Intertek

AHRI CERTIFIED® www.ahridirectory.org

COMPANY WITH QUALITY SYSTEM CERTIFIED BY DNV GL = ISO 9001 =

COMPANY WITH ENVIRONMENTAL SYSTEM CERTIFIED BY DNV GL = ISO 14001 =

BBB ACCREDITED BUSINESS

* Complete warranty details available from your local dealer or at www.goodmanmfg.com. To receive the 10-Year Parts Limited Warranty, online registration must be completed within 60 days of installation. Online registration is not required in California or Québec. The duration of warranty coverage in Texas and Florida differs in some cases.

A	W	V	E	24	S	U	1	3	00	A	A
1	2	3	4	5,6	7	8	9	10	11,12	13	14

Product
A Corporate Air Handler
D Daikin Air Handler

Application
C Ceiling Mount
W Wall Mount

Motor
S MS-ECM
V VS-ECM Communicating

Expansion Device
E Electronic Expansion Valve
F Flowrator
T Thermal Expansion Valve

Nominal Capacity Range
12 - 1.0 Ton
18 - 1.5 Tons
24 - 2.0 Tons
30 - 2.5 Tons
36 - 3.0 Tons

Cabinet Width

AC* Series	AM* Series	AW* Series
M - 43.25”	B - 17.5”	S - 20.2”
L - 49.25”	C - 21.0”	L - 24.0”
	D - 24.5”	

Cabinet
N - Uncased
P - Painted
U - Unpainted

Electrical
1 208/230 V, 1 Phase, 60 Hz

Refrigerant
3 - R32

Factory Installed Electric Heat KW
00 - No Electric Heat

Major Revision

Minor Rev

H	K	T	W	N	0	3	L	1
1	2	3	4	5	6	7	8	9

Unit Type
HKTW - Electric heater
Kit for Wall Mount Air handlers

Service Disconnect
D - Service disconnect
N - No service disconnect

Electrical
A - Single phase 208 V
B - Single phase 240 V
1 - Single phase 208/240 V
3 - Three phase 208/240 V

Cabinet Size
X - All Cabinets
S - Smal Cabinet
L - Large Cabinet

Heating Capacity @ 240 V

3	3.0 kW	10	9.6 kW
5	4.8 kW	15	14.4 kW
6	6.0 kW	19	19.2 kW with 170°F limit
8	8.0 kW	20	19.2 kW with 160°F limit
		25	24.0 kW

Note: 20X3 = 18.0 kW with 160°F limit

	AWVE12 SU1300	AWVE18 SU1300	AWVE24 SU1300	AWVE30 LU1300	AWVE36 LU1300
Nominal Ratings					
Cooling (BTU/h)	12000	18000	24000	30000	36000
Heating (BTU/h)	12000	18000	24000	30000	36000
Blower					
Diameter	10	10	10	10	10
Width	6	6	6	8	8
Coil Connections					
Liquid	⅜″	⅜″	⅜″	⅜″	⅜″
Suction	⅝″	⅝″	⅝″	¾″	¾″
Coil Drain Connection FPT	¾″	¾″	¾″	¾″	¾″
Electrical Data					
Voltage	208/230	208/230	208/230	208/230	208/230
Minimum Circuit Ampacity	2.6/2.6	3.5/3.5	4.9/4.9	4.9/4.9	4.9/4.9
Max. Overcurrent Device (Amps)	15/15	15/15	15/15	15/15	15/15
Minimum VAC	197	197	197	197	197
Maximum VAC	253	253	253	253	253
Blower Motor					
Full Load Amps (FLA)	2.1	2.8	3.9	3.9	3.9
Horsepower (HP)	1/4	1/3	1/2	1/2	1/2
Ship Weight (lbs)	77	77	80	94	94

MODELS	Circuit 1 (208V/240V)		
	Heater Amps	MCA[1]	MOP[2]
AWVE30LU1300	0.0/0.0	4.9/4.9	15/15
HKTWN03L1	10.8/12.5	18.4/20.5	20/25
AWVE36LU1300	0.0/0.0	4.9/4.9	15/15
HKTWN03L1	10.8/12.5	18.4/20.5	20/25

[1] Minimum Circuit Ampacity (Heater Amps + Motor Amps) X 1.25
[2] Maximum Overcurrent Protection = 2.25 X Motor Amps + Heater Amps

Note - Once installed, top of unit must be level or slightly tilted back to ensure proper condensate drainage.

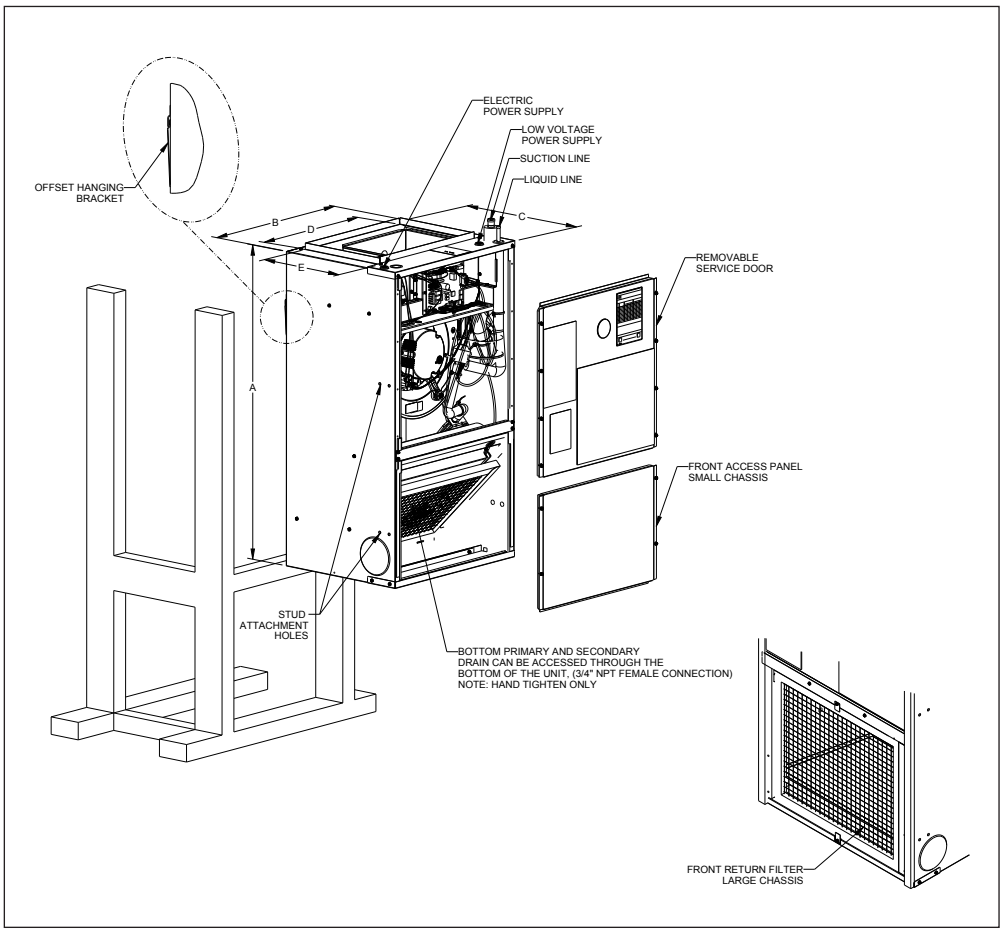

SMALL CHASSIS (AWVE12,18,24)	
A	36”
B	20 3/16"
C	16⅛"
D	16”
E	11”
Filter	14" X 18" x 1“

LARGE CHASSIS (AWVE30,36)	
A	36”
B	24"
C	21"
D	19⅞”
E	15⅞”
Filter	18" X 20" x 1“

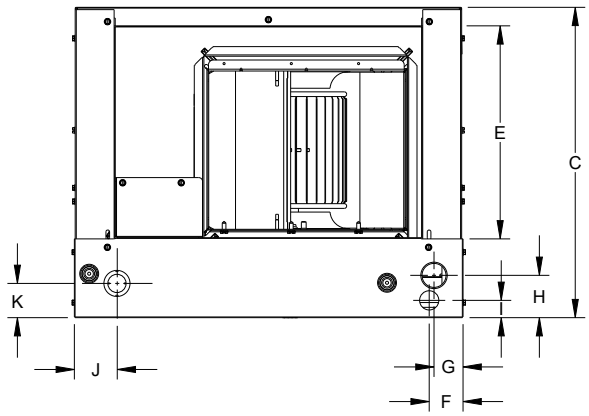

TOP VIEW

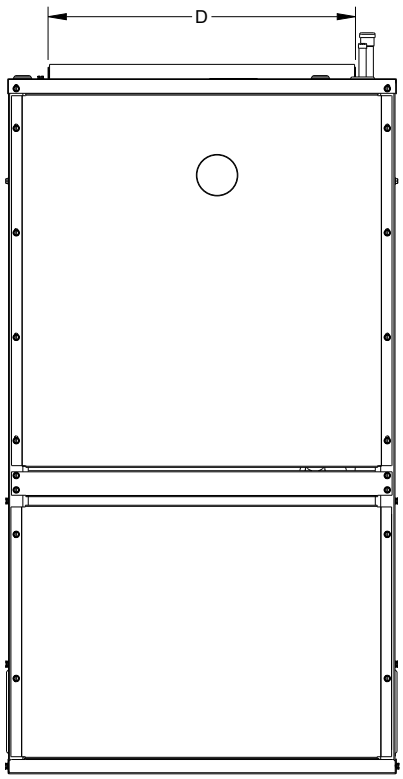

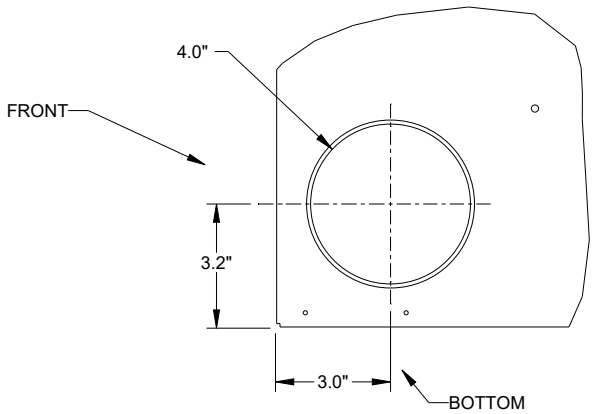

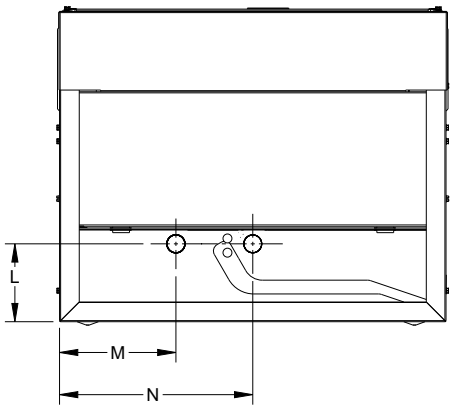

BOTTOM VIEW

	A	B	C	D	E	F	G	H	I	J	K	L	M	N
AWVE 12,18,24	36"	20¼"	16⅛"	16"	11"	1¾"	1½"	2¼"	⅞"	1⅛"	1¾"	4"	6"	10"
AWVE 30,36	36"	24"	21"	19⅞"	16"	4⅛"	1½"	1¾"	2"	1¼"	2⅜"	4"	8"	12"

Rated indoor airflow rate [SCFM]

		STATIC PRESSURE (in. wc)							
ID unit	**OD unit**	**0.1**	**0.2**	**0.3**	**0.4**	**0.5**	**0.6**	**0.7**	**0.8**
AWVE12 SU1300	DH6VSA121M / GZV6VSA121M	450	450	450	450	450	450	450	450
AWVE18 SU1300	DH6VSA181M / GZV6VSA181M	600	600	600	600	600	600	600	600
AWVE24 SU1300	DH6VSA241M / GZV6VSA241M	830	830	830	830	830	830	830	830
AWVE30 LU1300	DH6VSA301M */ GZV6VSA301M *	1000	1000	1000	1000	1000	1000	1000	1000
AWVE36 LU1300	DH6VSA361M */ GZV6VSA361M *	1150	1150	1150	1150	1150	1150	1150	1150

* The chart is for information only. For satisfactory operation, external static pressure must not exceed 0.3 wc. CFM values are based on 0% trim, refer to outdooer spec sheet for higher/lower trim values.

* Unit may provide different SCFM during electrical heater operation. See IO manual for the airflow rate.

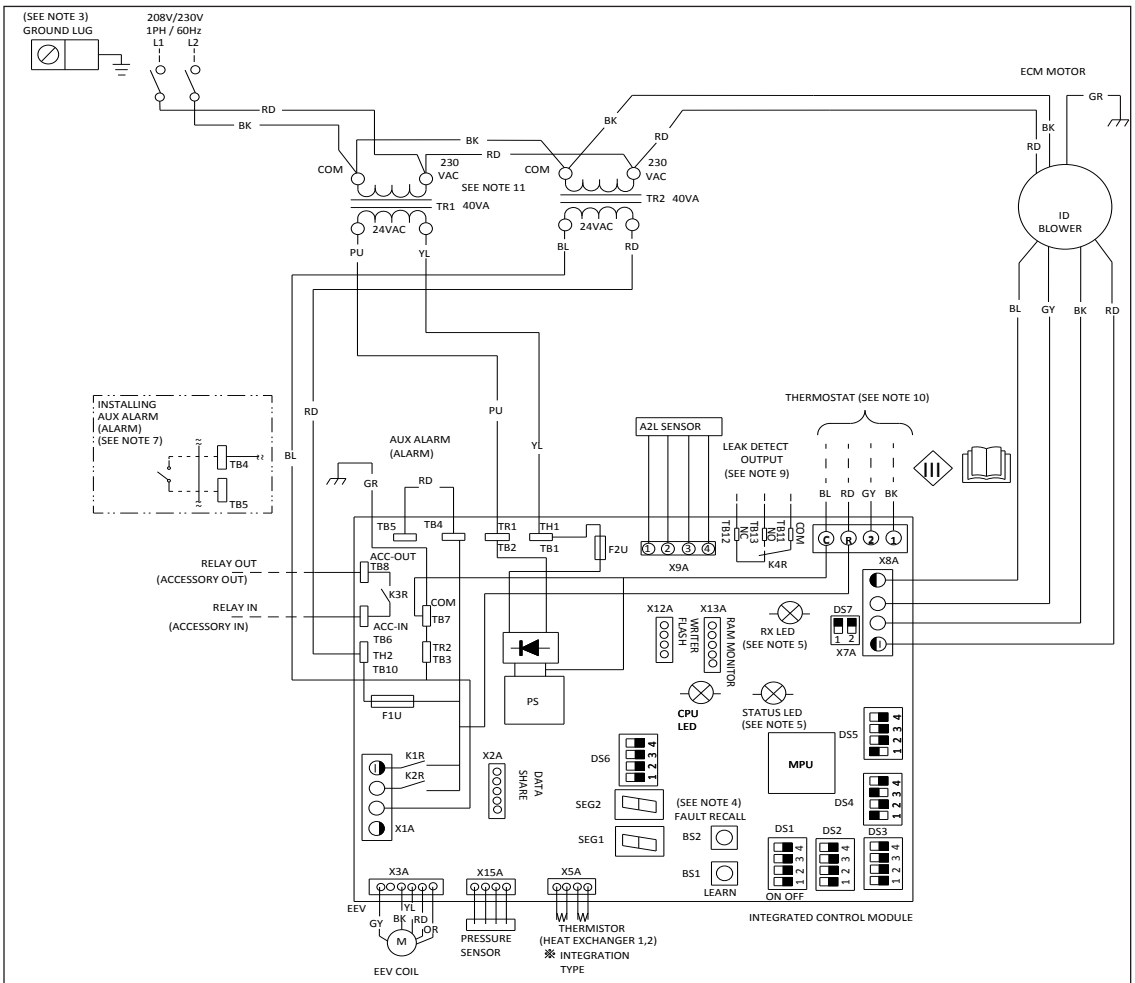

NOTES :

1. MANUFACTURER'S SPECIFIED REPLACEMENT PARTS MUST BE USED WHEN SERVICING.
2. IF ANY OF THE ORIGINAL WIRES AS SUPPLIED WITH THIS UNIT MUST BE REPLACED, IT MUST BE REPLACED WITH WIRING MATERIAL HAVING A TEMPERATURE RATING OF AT LEAST 105 °C. USE COPPER CONDUCTORS ONLY.
3. UNIT MUST BE PERMANENTLY GROUNDED AND CONFORMED TO N.E.C AND LOCAL CODES.
4. TO RECALL THE LAST 6 FAULTS, MOST RECENT TO LEAST RECENT, DEPRESS FAULT RECALL BUTTON FOR MORE THAN 2 SECONDS WHILE IN STANDBY (NO THERMOSTAT INPUTS)
5. RED STATUS LED PROVIDES NETWORK STATUS. GREEN RX LED INDICATES NETWORK TRAFFIC. USE LEARN BUTTON TO RESET NETWORK.
6. THE POSITION OF SELECTOR SWITCHES (DS1 - DS7) INDICATE FACTORY SETTING.
7. REMOVE SHORT RED WIRE AND PUT AUX ALARM SWITCH WHEN INSTALLING AUX ALARM SWITCH.
8. HEATER KIT IS NOT COMPATIBLE WITH THIS MODEL.
9. THIS OUTPUT OPERATES WHEN A REFRIGERANT LEAK IS DETECTED. (DRY CONTACT) USE THIS CONTACT WHEN INTERLOCKING UV LIGHT, DAMPER, ETC.
10. USE N.E.C CLASS 2 WIRE.
11. LOW VOLTAGE TRANSFORMER RATED 24VAC OUTPUT 40VA @ 1.667 AMP.

COMPONENT LEGEND:

- LOW VOLTAGE
- LOW VOLTAGE FIELD
- HIGH VOLTAGE
- HIGH VOLTAGE FIELD
- JUNCTION
- TERMINAL
- INTERNAL CONNECTIONS
- RESISTOR
- FUSE (F1U, F2U)
- PLUG CONNECTION
- EQUIPMENT GROUND
- FIELD GROUND
- DIP SWITCH(OFF) — ON OFF
- READ THE INSTRUCTIONS
- FIELD SPLICE
- CLASS III

COMPONENT CODES:

DS1 - DS7	SELECTOR SWITCH
TR	TRANSFORMER
FPL	FEMALE PLUG
MPL	MALE PLUG
ID	INDOOR
AUX	AUXILIARY
COM	24V COMMON

COLOR CODES:

BL	- BLUE
RD	- RED
YL	- YELLOW
OR	- ORANGE
BK	- BLACK
GY	- GREY
BR	- BROWN
GR	- GREEN
PU	- PURPLE
WH	- WHITE
PK	- PINK

0140A20117-A

WARNING

High Voltage: Disconnect all power before servicing or installing this unit. Multiple power sources may be present. Failure to do so may cause property damage, personal injury, or death.

Wiring is subject to change. Always refer to the wiring diagram on the unit for the most up-to-date wiring.

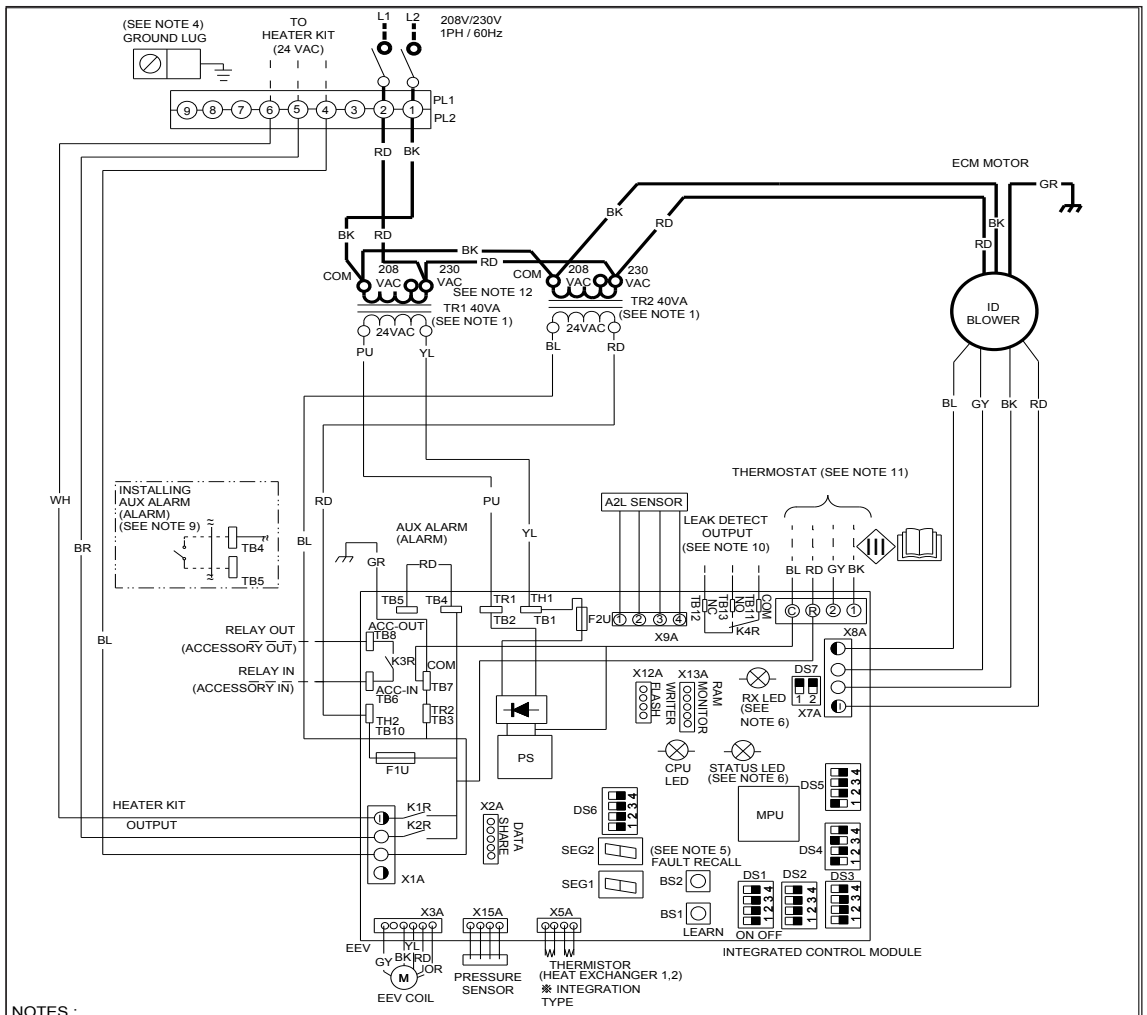

NOTES :

1. PLACE RED WIRES ON 208 V TERMINAL OF 2-TRANSFORMER (TR1/TR2) FOR 208 VAC OPERATION.
2. MANUFACTURER'S SPECIFIED REPLACEMENT PARTS MUST BE USED WHEN SERVICING.
3. IF ANY OF THE ORIGINAL WIRES AS SUPPLIED WITH THIS UNIT MUST BE REPLACED, IT MUST BE REPLACED WITH WIRING MATERIAL HAVING A TEMPERATURE RATING OF AT LEAST 105°C. USE COPPER CONDUCTORS ONLY.
4. UNIT MUST BE PERMANENTLY GROUNDED AND CONFORM TO N.E.C AND LOCAL CODES.
5. TO RECALL THE LAST 6 FAULTS, MOST RECENT TO LEAST RECENT, DEPRESS FAULT RECALL BUTTON FOR MORE THAN 2 SECONDS WHILE IN STANDBY (NO THERMOSTAT INPUTS)
6. RED STATUS LED PROVIDES NETWORK STATUS. GREEN RX LED INDICATES NETWORK TRAFFIC. USE LEARN BUTTON TO RESET NETWORK.
7. DISCARD CONNECTOR PL1 WHEN INSTALLING OPTIONAL HEAT KIT.
8. THE POSITION OF SELECTOR SWITCHES (DS1 - DS7) INDICATE FACTORY SETTING.
9. REMOVE SHORT RED CIRCUITING WIRE AND PUT AUX ALARM SWITCH WHEN INSTALLING AUX ALARM SWITCH, CONDENSATE SWITCH, ETC.
10. THIS OUTPUT OPERATES WHEN A REFRIGERANT LEAK IS DETECTED. (DRY CONTACT) USE THIS CONTACT WHEN INTERLOCKING UV LIGHT, DAMPER, ETC.
11. USE N.E.C CLASS 2 WIRE.
12. LOW VOLTAGE TRANSFORMER RATED 24VAC OUTPUT 40VA @1.667 AMP.

COMPONENT LEGEND:

- LOW VOLTAGE
- LOW VOLTAGE FIELD
- HIGH VOLTAGE
- HIGH VOLTAGE FIELD
- JUNCTION
- TERMINAL
- INTERNAL CONNECTIONS
- RESISTOR
- FUSE (F1U, F2U)
- PLUG CONNECTION
- EQUIPMENT GROUND
- FIELD GROUND
- DIP SWITCH(OFF) — ON OFF
- READ THE INSTRUCTIONS
- FIELD SPLICE
- CLASS III

COMPONENT CODES:

- PL1, PL2 — POWER/HEATER CONNECTOR
- DS1 - DS7 — SELECTOR SWITCH
- TR — TRANSFORMER
- PL3, PL4 — TRANSFORMER CONNECTOR
- ID — INDOOR
- AUX — AUXILIARY
- COM — 24V COMMON

COLOR CODES:

- BL - BLUE
- RD - RED
- YL - YELLOW
- OR - ORANGE
- BK - BLACK
- GY - GREY
- BR - BROWN
- GR - GREEN
- PU - PURPLE
- WH - WHITE

0140A20087-A

WARNING

High Voltage: Disconnect all power before servicing or installing this unit. Multiple power sources may be present. Failure to do so may cause property damage, personal injury, or death.

Wiring is subject to change. Always refer to the wiring diagram on the unit for the most up-to-date wiring.

Model	Item #	Description
AWVE12,18,24	Wad-1	Wall access door
AWVE30,36	Wad-2	Wall access door

Our continuing commitment to quality products may mean a change in specifications without notice.
©2026 DAIKIN COMFORT TECHNOLOGIES MANUFACTURING, INC. • Houston, Texas • Printed in the USA.