Goodman
Air Conditioning & Heating

AVPTC

Multi-Position, Variable-Speed, ECM-Based Air Handler with Internal TXV ComfortNet® Compatible 1½ to 5 Tons

Contents

Air Handler Nomenclature 2
Heater Kit Nomenclature 2
Product Specifications 3
Dimensions 4
Airflow Data 6
Heat Kit Data 12
Wiring Diagram 22
Accessories 24

Product Features

- Internal factory-installed thermal expansion valves for cooling and heat pump applications
- Variable-speed ECM blower motor
- ComfortNet® Communicating System compatible
- Auto configuration of the airflow and tonnage in communicating mode
- Provides constant CFM over a wide range of static pressure conditions independent of duct system
- CFM indicator
- Fault recall of six most recent faults
- Provides adjustable low CFM for efficient fan-only operation
- Improved humidity and comfort control
- Built-in compatibility with multi-stage heat pump and cooling applications
- All-aluminum evaporator coil
- AHRI certified; ETL listed
- Rigid SmartFrame™ cabinet
- Cabinet air leakage less than 2.0% at 1.0 inch H_2O when tested in accordance with ASHRAE standard 193
- Cabinet air leakage less than 1.4% at 0.5 inch H_2O when tested in accordance with ASHRAE standard 193
- Horizontal or vertical configuration capabilities
- 21" depth for easier attic access
- DecaBDE-free thermoplastic drain pan with secondary drain connections
- Screw-less sides and back helps to reduce condensation when installed in humid locations
- Foil-faced insulation covers the internal casing to reduce cabinet condensation
- Galvanized, leather grain-embossed finish
- Glue-less cabinet insulation retention
- Tool-less filter access
- Field Installed 3 kW – 25 kW electric heater kits available

10 YEAR PARTS LIMITED WARRANTY*

ALL ALUMINUM COIL

ComfortNet®

Intertek

AHRI CERTIFIED www.ahridirectory.org

COMPANY WITH QUALITY SYSTEM CERTIFIED BY DNV GL = ISO 9001 =

COMPANY WITH ENVIRONMENTAL SYSTEM CERTIFIED BY DNV GL = ISO 14001 =

BBB ACCREDITED BUSINESS

* Complete warranty details available from your local dealer or at www.goodmanmfg.com. To receive the 10-Year Parts Limited Warranty, online registration must be completed within 60 days of installation. Online registration is not required in California or Quebec.

A	V	P	T	C	25	B	1	4	AA
1	2	3	4	5	6,7	8	9	10	11,12

Brand
A Single-Piece Airhandler

Unit Application
R Multi Position PSC Motor
S Multi Position EEM Motor
V Multi Position Variable-Speed Motor-Communinacating

Cabinet Finish
U Unpainted
P Painted

Expansion Device
T Expansion Device
V Inverter Tuned Expansion Valve

Communications
C = ComfortNet™ Compatible

Nominal Capacity @ 13SEER

24 = 2 Tons	33 = 2 Tons	42 = 3½ Tons
25 = 2 Tons	35 = 3 Tons	48 = 4 Tons
29 = 2 Tons	36 = 3 Tons	49 =4 Tons
30 = 2½ Tons	37 = 2½-3½ Tons	59 = 4-5 Tons
31 = 2½ Tons	39 = 3 Tons	60 = 5 Tons
		61 = 5 Tons

Cabinet Width
B = 17½"
C = 21"
D = 24½"

Electrical
1 208/230V, 1 Phase, 60 Hz

Refrigerant Charge
4 = R-410A

Engineering*
Major/Minor Revisions
*Not used for inventory management

HKS	X	03	X	A	AA
1	2	3	4	5	6,7

Unit Type
HKS Heat Kit for Air Handlers

Circuit Breaker
X No circuit breaker
C Circuit Breaker

Heating Capacity @ 240 Volts

03	3.0 kW	15	14.4 kW
05	4.5 kW	19	19.2 kW wth 150F limit
06	6.0 kW	20	19.2 kW with 170F limit
08	8.0 kW	25	25.0 kW
10	9.6 kW		

Cabinet Size (MAX)
C C Cabinet
D D Cabinet
X All Cabinet Sizes

Phase
A Single Phase 208 V
B Single Phase 240 V
C Single Phase 208/240 V
D Three Phase 208 V
E Three Phase 240 V
F Three Phase 208/240 V
G Three Phase 460 V

Revisions
Engineering Revisions

	AVPTC 24B14A*	AVPTC 25B14A*	AVPTC 29B14A*	AVPTC 30C14A*	AVPTC 31C14A*	AVPTC 33C14*	AVPTC 35B14A*	AVPTC 36C14A*	AVPTC 37B14A*	AVPTC 37C14A*	AVPTC 37D14A*
Nominal Ratings											
Cooling (BTU/h)	24,000	24,000	30,000	30,000	30,000	24,000	28,000	36,000	36,000	36,000	36,000
CFM (High range)	1100/600	1085/650	1085/610	1200/600	1315/870	1090/685	1020/685	1600/700	1085/610	1315/870	1375/865
Blower											
Diameter	9½"	9½"	9½"	10⅝"	10⅝"	10⅝"	9½"	10⅝"	9½"	10⅝"	10⅝"
Width	6"	6"	6"	8"	8"	8"	6"	10⅝"	6"	8"	10⅝"
Coil Drain Connection FPT	¾"	¾"	¾"	¾"	¾"	¾"	¾"	¾"	¾"	¾"	¾"
Service Valve											
Liquid	⅜"	⅜"	⅜"	⅜"	⅜"	⅜"	⅜"	⅜"	⅜"	⅜"	⅜"
Suction	¾"	¾"	⅞"	⅞"	⅞"	⅞"	¾"	⅞"	⅞"	⅞"	⅞"
Electrical Data											
Voltage	208/240	208/240	208/240	208/240	208/240	208/240	208/240	208/240	208/240	208/240	208/240
Min Circuit Ampacity	4.9/4.9	4.9/4.9	6.5/6.5	4.9/4.9	6.5/6.5	4.9/4.9	4.9/4.9	6.5/6.5	6.5/6.5	6.5/6.5	6.5/6.5
Max. Overcurrent Device (amps)	15/15	15/15	15/15	15/15	15/15	15/15	15/15	15/15	15/15	15/15	15/15
Minimum VAC	197	197	197	197	197	197	197	197	197	197	197
Maximum VAC	253	253	253	253	253	253	253	253	253	253	253
Blower Motor											
FLA	3.9	3.9	5.2	3.9	5.2	3.9	3.9	5.2	5.2	5.2	5.2
HP	½	½	¾	½	¾	½	½	¾	¾	¾	¾
Ship Weight (lbs)	100	116	129	118	144	118	116	118	129	144	155

Note: Minimum Circuit Ampacity (MCA) and Maximum Overcurrent Protection (MOP) for blower without supplemental heat installed.
Refer to unit nameplate and/or Heat Kit Data for specification with approved accessory heaters installed

	AVPTC 39C14*	AVPTC 42D14A*	AVPTC 48C14A*	AVPTC 48D14A*	AVPTC 49C14*	AVPTC 49D14A*	AVPTC 59C14A*	AVPTC 59D14A*	AVPTC 60D14A*	AVPTC 61D14A*
Nominal Ratings										
Cooling (BTU/h)	36,000	42,000	42,000	48,000	48,000	42,000	48,000	48,000	60,000	60,000
CFM (High range)	1315/965	1700/800	1660/700	1800/1350	1420/1040	1530/1195	1595/875	1990/1445	2000/1600	2025/1630
Blower										
Diameter	10⅝"	10⅝"	10⅝"	10⅝"	10⅝"	10⅝"	10⅝"	11 15/16"	11⅝"	11 15/16"
Width	8"	10⅝"	10⅝"	10⅝"	8"	10⅝"	8"	10⅝"	10⅝"	10⅝"
Coil Drain Connection FPT	¾"	¾"	¾"	¾"	¾"	¾"	¾"	¾"	¾"	¾"
Service Valve										
Liquid	⅜"	⅜"	⅜"	⅜"	⅜"	⅜"	⅜"	⅜"	⅜"	⅜"
Suction	⅞"	⅞"	⅞"	⅞"	⅞"	⅞"	⅞"	⅞"	⅞"	⅞"
Electrical Data										
Voltage	208/240	208/240	208/240	208/240	208/240	208/240	208/240	208/240	208/240	208/240
Min Circuit Ampacity	6.5/6.5	6.5/6.5	6.5/6.5	6.5/6.5	6.5/6.5	6.5/6.5	8.6/8.6	8.6/8.6	8.6/8.6	8.6/8.6
Max. Overcurrent Device (amps)	15/15	15/15	15/15	15/15	15/15	15/15	15/15	15/15	15/15	15/15
Minimum VAC	197	197	197	197	197	197	197	197	197	197
Maximum VAC	253	253	253	253	253	253	253	253	253	253
Blower Motor										
FLA	5.2	5.2	5.2	5.2	5.2	5.2	6.9	6.9	6.9	6.9
HP	¾	¾	¾	¾	¾	¾	1	1	1	1
Ship Weight (lbs)	118	155	125	167	125	167	144	155	167	167

Note: Minimum Circuit Ampacity (MCA) and Maximum Overcurrent Protection (MOP) for blower without supplemental heat installed.
Refer to unit nameplate and/or Heat Kit Data for specification with approved accessory heaters installed

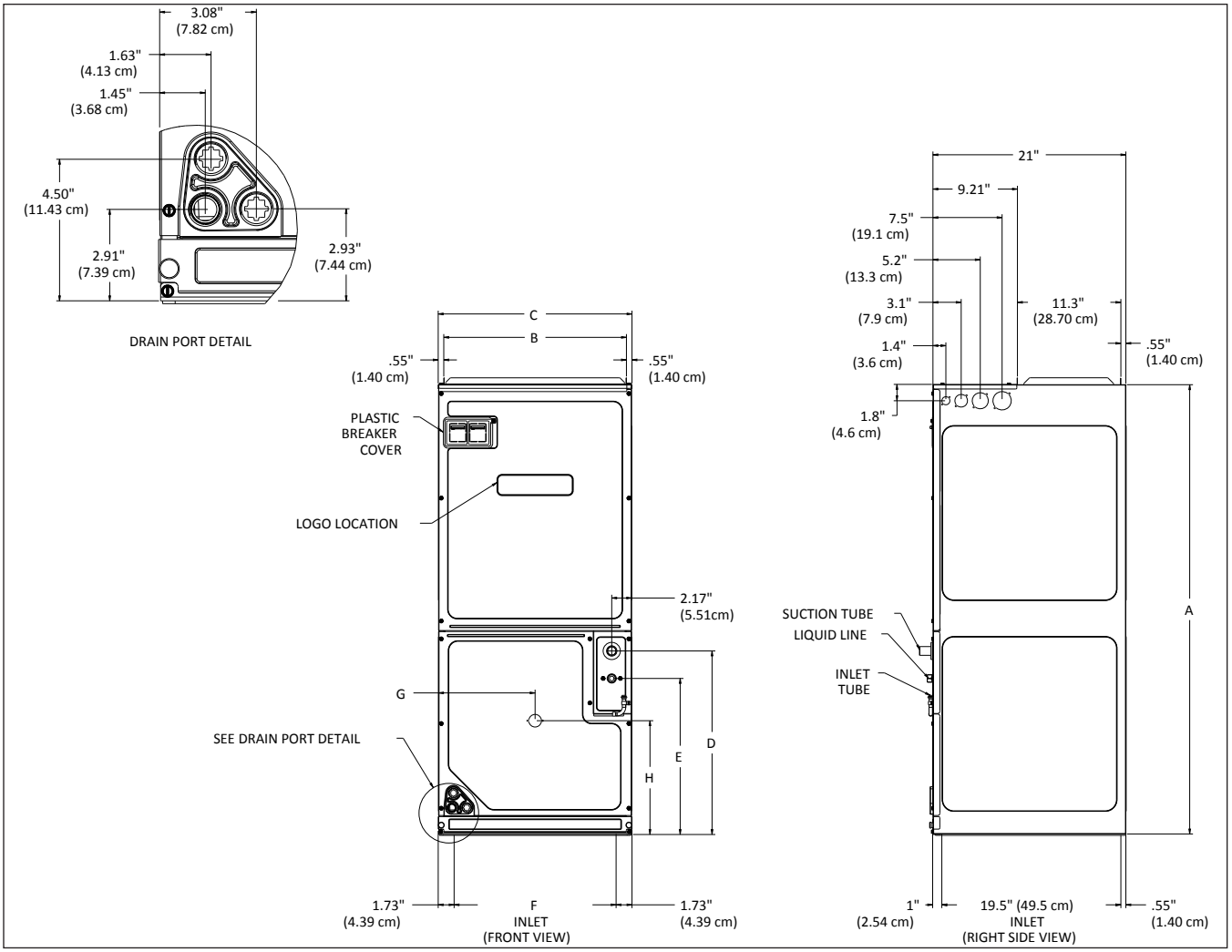

Model	A	B	C	D	E	F	G	H
AVPTC24B14	45	16⅜	17½	18	15	14 3/16	8 13/16	11 15/16
AVPTC30C14	49	19 15/16	21	20	17	17 11/16	10½	12⅜
AVPTC36C14	49	19 15/16	21	20	17	17 11/16	10½	12⅜
AVPTC42D14	58	23 5/16	24½	28 3/16	25 3/16	21 3/16	12 5/16	12⅜
AVPTC48C14	49	19 15/16	21	20	17	17 11/16	10½	12⅜
AVPTC48D14	58	23 5/16	24½	28 3/16	25 3/16	21 3/16	12 5/16	12⅜
AVPTC60D14	58	23 5/16	24½	28 3/16	25 3/16	21 3/16	12 5/16	12⅜

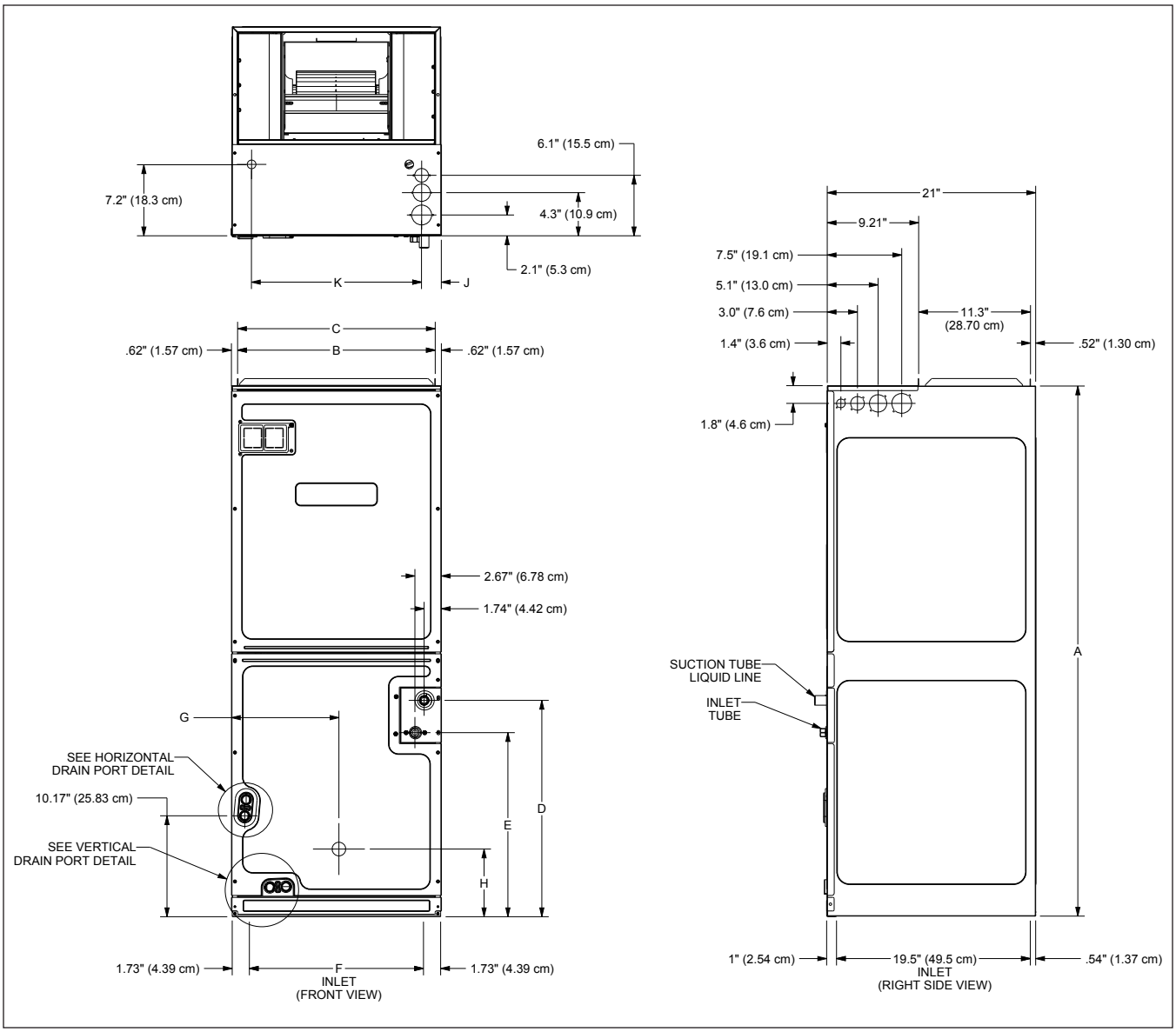

Model	A	B	C	D	E	F	G	H
AVPTC25B14*	45	16⅜	17½	15¼	12	14⅙	9⅛	12⅝
AVPTC29B14*	53 7/16	16⅜	17½	23 11/16	20½	14⅙	9⅛	7⅝
AVPTC31C14*	53 7/16	19⅞	21	21 13/16	18⅝	17 11/16	10 13/16	6 13/16
AVPTC33C14*	49	19⅞	21	17 9/16	14⅜	17 11/16	10 9/16	12½
AVPTC35B14*	45	16⅜	17½	15¼	12	14⅙	9⅛	12⅝
AVPTC37B14*	53 7/16	16⅜	17½	23 11/16	20½	14⅙	9⅛	7⅝
AVPTC37C14*	53 7/16	19⅞	21	21 13/16	18⅝	17 11/16	10 13/16	6 13/16
AVPTC37D14*	53 7/16	23 5/16	24½	21½	18 5/16	21 3/16	12⅝	6⅞
AVPTC39C14*	49	19⅞	21	17 9/16	14⅜	17 11/16	10 9/16	12½
AVPTC49C14*	49	19⅞	21	17 9/16	14⅜	17 11/16	10 9/16	12½
AVPTC49D14*	58	23 5/16	24½	26⅛	22⅞	21 3/16	12⅝	25⅛
AVPTC59C14*	53 7/16	19⅞	21	21 13/16	18⅝	17 11/16	10 13/16	6 13/16
AVPTC59D14*	53 7/16	23 5/16	24½	21½	18 5/16	21 3/16	12⅝	6⅞
AVPTC61D14*	58	23 5/16	24½	26⅛	22⅞	21 3/16	12⅝	25⅛

Model	Speed Tap		0.1	0.2	0.3	0.4	0.5	0.6	0.7	0.8	0.9
AVPTC24B14	A	Low	415	415	410	410	405	405	400	400	400
	B	Low	575	570	565	560	560	555	555	550	550
	C	Low	685	670	660	650	645	635	630	625	620
	D	Low	795	780	765	755	745	735	725	720	715
	A	High	620	615	610	605	600	600	595	590	590
	B	High	865	850	835	825	815	805	795	790	785
	C	High	1005	990	970	960	945	935	920	915	910
	D	High	1165	1145	1125	1110	1100	1085	1070	1065	1055
AVPTC25B14AB	A	Low	460	445	445	425	410	400	400	400	395
	B	Low	620	610	600	605	600	590	585	575	565
	C	Low	700	695	690	690	690	690	675	665	660
	D	Low	750	750	745	745	740	730	720	710	700
	A	High	670	660	650	650	655	645	640	635	625
	B	High	870	865	855	850	840	840	840	830	835
	C	High	1000	990	980	975	965	965	955	955	945
	D	High	1105	1095	1085	1075	1065	1055	1050	1040	1030
AVPTC29B14AB AVPTC37B14AB	A	Low	390	385	375	360	350	335	325	315	305
	B	Low	545	540	545	540	540	540	535	530	525
	C	Low	610	620	630	635	630	625	620	625	625
	D	Low	720	735	740	740	735	730	725	715	705
	A	High	615	620	610	605	610	615	615	620	625
	B	High	790	795	795	795	795	790	800	795	785
	C	High	925	930	930	925	925	920	915	910	905
	D	High	1085	1085	1085	1080	1080	1075	1070	1065	1060
AVPTC30C14	A	Low	465	455	440	430	425	415	405	400	395
	B	Low	615	610	605	600	595	595	590	585	585
	C	Low	755	745	740	735	730	725	720	720	715
	D	Low	900	890	885	880	875	870	865	865	860
	A	High	620	615	610	610	605	605	600	600	600
	B	High	850	840	835	830	825	820	815	815	810
	C	High	1030	1025	1020	1015	1010	1010	1005	1000	1000
	D	High	1245	1235	1225	1220	1210	1205	1200	1195	1195
AVPTC31C14AD AVPTC37C14AC	A	Low	610	600	590	590	600	605	610	610	610
	B	Low	710	710	705	705	695	690	685	675	665
	C	Low	845	845	845	825	815	810	800	805	795
	D	Low	915	910	910	900	850	840	830	820	825
	A	High	885	880	880	860	850	840	830	820	830
	B	High	1055	1055	1055	1040	1030	1015	1005	995	985
	C	High	1275	1270	1265	1260	1250	1240	1230	1215	1205
	D	High	1365	1360	1360	1330	1300	1290	1280	1270	1255
AVPTC33C14AB	A	Low	500	480	460	445	430	415	400	380	365
	B	Low	580	565	545	535	525	515	505	495	485
	C	Low	710	700	685	675	670	665	655	645	640
	D	Low	725	750	755	760	755	745	735	725	715
	A	High	710	700	685	685	685	680	670	660	645
	B	High	765	780	785	785	785	775	770	760	745
	C	High	950	960	970	970	970	960	955	945	935
	D	High	1090	1090	1090	1095	1090	1085	1080	1075	1065

Note: When applying a humidistat (normally closed), refer to the installation and operating instructions. The humidistat can adjust the cooling airflow to 85%.

Model	Speed Tap		0.1	0.2	0.3	0.4	0.5	0.6	0.7	0.8	0.9
AVPTC35B14	A	Low	395	390	395	390	385	380	380	380	380
	B	Low	580	580	590	580	575	580	575	575	575
	C	Low	670	670	680	690	680	670	660	660	665
	D	Low	715	705	710	720	715	705	690	685	680
	A	High	645	630	645	645	635	630	630	635	635
	B	High	900	875	870	870	870	870	865	855	845
	C	High	1030	1015	1005	995	990	985	990	990	980
	D	High	1075	1060	1045	1035	1030	1025	1020	1020	1015
AVPTC36C14	A	Low	515	505	500	485	465	460	450	425	410
	B	Low	715	705	700	685	675	670	660	640	630
	C	Low	950	935	930	910	895	890	875	855	835
	D	Low	1135	1125	1120	1105	1090	1085	1075	1055	1040
	A	High	740	730	725	710	695	690	680	660	645
	B	High	1015	1005	1000	985	965	960	950	925	910
	C	High	1345	1335	1330	1315	1300	1295	1290	1270	1255
	D	High	1615	1605	1600	1585	1570	1565	1555	1535	1520
AVPTC37D14AC	A	Low	605	605	605	575	560	545	525	510	500
	B	Low	730	725	725	700	700	695	680	660	645
	C	Low	820	820	820	800	760	750	740	720	700
	D	Low	870	885	940	885	875	865	850	835	835
	A	High	910	905	900	870	870	860	855	845	845
	B	High	1085	1080	1080	1060	1060	1055	1045	1035	1020
	C	High	1230	1225	1225	1205	1205	1200	1190	1185	1180
	D	High	1405	1405	1405	1370	1365	1355	1345	1335	1330
AVPTC39C14AC	A	Low	715	695	680	685	685	680	675	665	650
	B	Low	755	770	780	780	780	780	770	765	755
	C	Low	780	790	795	805	800	800	795	805	795
	D	Low	875	885	890	890	890	890	885	880	875
	A	High	960	960	965	970	965	965	960	955	950
	B	High	1120	1115	1115	1115	1120	1115	1115	1110	1105
	C	High	1180	1180	1175	1175	1175	1175	1170	1165	1160
	D	High	1325	1320	1315	1315	1310	1310	1310	1305	1300
AVPTC42D14	A	Low	600	580	560	545	535	520	505	500	490
	B	Low	795	780	765	750	740	730	720	715	710
	C	Low	1025	1010	995	985	970	960	950	945	940
	D	Low	1250	1235	1225	1215	1210	1200	1195	1190	1185
	A	High	835	815	800	790	780	765	755	750	745
	B	High	1115	1105	1090	1080	1070	1065	1055	1050	1045
	C	High	1445	1430	1420	1410	1405	1395	1390	1385	1380
	D	High	1775	1760	1750	1740	1735	1725	1720	1715	1710
AVPTC48C14	A	Low	510	505	500	490	485	480	475	465	455
	B	Low	710	705	700	690	680	680	670	660	650
	C	Low	940	935	930	920	910	910	905	890	880
	D	Low	1165	1160	1160	1155	1150	1145	1140	1135	1125
	A	High	735	730	725	715	705	700	695	685	675
	B	High	1010	1005	1000	990	985	980	975	965	955
	C	High	1340	1335	1330	1320	1310	1310	1305	1290	1280
	D	High	1675	1665	1660	1645	1635	1630	1620	1605	1590

Note: When applying a humidistat (normally closed), refer to the installation and operating instructions. The humidistat can adjust the cooling airflow to 85%.

Model	Speed Tap		0.1	0.2	0.3	0.4	0.5	0.6	0.7	0.8	0.9
AVPTC48D14	A	Low	910	910	900	895	885	880	875	870	850
	B	Low	1050	1045	1035	1030	1025	1020	1015	1010	1010
	C	Low	1155	1145	1140	1135	1130	1125	1120	1120	1115
	D	Low	1215	1210	1200	1195	1190	1185	1180	1175	1170
	A	High	1370	1360	1350	1345	1340	1330	1325	1325	1320
	B	High	1570	1560	1550	1545	1535	1530	1525	1520	1515
	C	High	1720	1710	1700	1695	1685	1680	1670	1670	1665
	D	High	1840	1820	1800	1785	1775	1760	1745	1740	1735
AVPTC49C14AC	A	Low	705	710	725	735	740	740	740	735	730
	B	Low	730	745	760	770	775	775	775	770	765
	C	Low	850	865	870	875	880	880	875	870	865
	D	Low	950	955	960	965	965	965	965	960	955
	A	High	1030	1040	1040	1045	1045	1045	1045	1040	1035
	B	High	1090	1095	1095	1095	1095	1095	1095	1090	1085
	C	High	1290	1290	1280	1285	1280	1280	1275	1275	1270
	D	High	1425	1425	1420	1420	1415	1410	1410	1405	1400
AVPTC49D14AB	A	Low	795	815	820	820	810	800	785	785	770
	B	Low	870	890	895	895	890	875	865	850	850
	C	Low	985	990	995	995	990	980	970	955	940
	D	Low	1040	1055	1055	1055	1045	1035	1025	1020	1005
	A	High	1195	1195	1195	1200	1195	1185	1175	1165	1155
	B	High	1325	1320	1320	1315	1315	1305	1295	1285	1275
	C	High	1460	1460	1455	1455	1455	1450	1440	1430	1420
	D	High	1520	1530	1530	1530	1530	1525	1515	1510	1495
AVPTC59C14AC	A	Low	635	620	610	600	600	600	600	600	600
	B	Low	790	805	810	810	805	805	795	810	800
	C	Low	930	940	940	935	930	925	920	915	905
	D	Low	1065	1065	1070	1065	1060	1050	1045	1035	1030
	A	High	870	880	875	875	870	865	860	860	845
	B	High	1230	1230	1225	1220	1210	1205	1200	1190	1180
	C	High	1420	1410	1410	1405	1395	1385	1380	1380	1370
	D	High	1615	1600	1595	1595	1585	1580	1570	1565	1555
AVPTC59D14AC	A	Low	1030	1035	1040	1040	1030	1025	1015	995	970
	B	Low	1260	1260	1260	1260	1260	1250	1245	1235	1225
	C	Low	1330	1335	1330	1330	1325	1320	1315	1305	1295
	D	Low	1395	1395	1395	1390	1390	1385	1375	1365	1355
	A	High	1450	1445	1445	1435	1430	1425	1420	1410	1395
	B	High	1795	1790	1790	1785	1775	1765	1760	1750	1745
	C	High	1890	1890	1890	1880	1870	1865	1855	1850	1840
	D	High	1995	1995	1990	1985	1985	1975	1965	1955	1945
AVPTC60D14	A	Low	1205	1205	1210	1205	1205	1200	1195	1195	1195
	B	Low	1375	1370	1365	1360	1360	1355	1355	1350	1350
	C	Low	1445	1445	1450	1445	1445	1440	1440	1440	1435
	D	Low	1535	1530	1525	1520	1520	1515	1510	1510	1510
	A	High	1615	1615	1610	1610	1605	1605	1600	1600	1600
	B	High	1825	1820	1815	1810	1810	1805	1805	1805	1800
	C	High	1930	1925	1920	1915	1915	1910	1905	1905	1900
	D	High	2040	2030	2025	2020	2015	2010	2005	2005	2000

Note: When applying a humidistat (normally closed), refer to the installation and operating instructions. The humidistat can adjust the cooling airflow to 85%.

Model	Speed Tap		0.1	0.2	0.3	0.4	0.5	0.6	0.7	0.8	0.9
AVPTC61D14AC	A	Low	1080	1085	1080	1085	1080	1075	1070	1065	1055
	B	Low	1200	1200	1210	1210	1210	1210	1205	1205	1200
	C	Low	1290	1290	1280	1275	1280	1280	1270	1265	1265
	D	Low	1360	1355	1350	1355	1350	1345	1340	1340	1330
	A	High	1630	1630	1630	1625	1620	1615	1610	1600	1590
	B	High	1820	1820	1820	1815	1805	1795	1785	1780	1770
	C	High	1935	1930	1925	1920	1905	1900	1890	1875	1865
	D	High	2035	2030	2025	2020	2005	1995	1985	1960	1955

Note: When applying a humidistat (normally closed), refer to the installation and operating instructions. The humidistat can adjust the cooling airflow to 85%.

HTR kW	9	10	11	AVPTC 24B14	AVPTC 25B14	AVPTC 29B14	AVPTC 30C14	AVPTC 31C14	AVPTC 33C14	AVPTC 35B14	AVPTC 36C14	AVPTC 37B14	AVPTC 37C14	AVPTC 37D14	AVPTC 39C14
3	ON	ON	ON	730	550	550	730	600	600	550	NR	550	---	---	---
5	ON	ON	OFF	780	650	650	780	850	700	660	850	650	850	1240	850
6	ON	OFF	ON	850	700	700	850	900	750	700	900	700	900	1240	900
8	ON	OFF	OFF	950	800	800	950	1000	875	800	1000	800	1000	1240	1000
10	OFF	ON	ON	1025	850	875	1025	1170	950	875	1200	875	1170	1240	1170
15	OFF	ON	OFF	NR	875	875	NR	1345	950	875	1440	1050	1345	1520	1345
19*	OFF	OFF	ON	NR	---	---	NR	1345	---	---	1500	---	1345	---	1345
20				NR	---	---	NR	---	---	---	1500	---	---	1520	---
21 or 25*	OFF	OFF	OFF	NR	---	---	NR	---	---	---	NR	---	---	---	---

Note: Airflow data shown applies to the electric heat only in either legacy mode or communicating mode operation

--- indicates Not Rated

* Within thermostat user menu, CTK0* communicating thermostat will display 20kW for OFF- OFF- ON dipswitch selection, 21kW for OFF-OFF-OFF dipswitch selection.

† For match up with a 2 ton outdoor unit: Heater kit application shall not exceed 10 kW. Airflow for 5 kW up to 10 kW heater kits shall be set to 850 cfm speed tap of ON-ON-ON.

†† For match up with a 3 ton outdoor unit: Heater kit application shall not exceed 15 kW. Airflow for 5 kW up to 15 kW heater kits shall be set to 1300 cfm speed tap of ON-OFF-ON.

††† For match up with a 3.5 ton outdoor unit: Heater kit application shall not exceed 20 kW. Airflow for 5 kW up to 20 kW heater kits shall be set to 1500 cfm speed tap of ON-OFF-OFF

** 3 kW heater kit is not applicable for this indoor application.

HTR kW	9	10	11	AVPTC 42D14†	AVPTC 48C14	AVPTC 48D14††	AVPTC 49C14	AVPTC 49D14 ŁŁ	AVPTC 59C14	AVPT C59D14	AVPTC 60D14†††	AVPTC 61D14 ŁŁŁ
3	ON	ON	ON	850**	NR	NR	---	---	---	---	NR	---
5	ON	ON	OFF	1400	850	1400	1170	1250	1170	1240	1620	1250
6	ON	OFF	ON	1630	900	1630	1170	1300	1170	1240	1670	1300
8	ON	OFF	OFF	1630	1000	1630	1170	1500	1170	1240	1720	1500
10	OFF	ON	ON	1670	1200	1670	1170	1550	1170	1240	1750	1550
15	OFF	ON	OFF	1720	1440	1720	1345	1720	1345	1520	1780	1780
19*	OFF	OFF	ON	NR	1500	NR	1345	---	1345	---	NR	---
20				1800	1500	1815	---	---	---	1520	1850	1850
21 or 25*	OFF	OFF	OFF	NR	NR	1850	---	---	---	---	1850	1850

Note: Airflow data shown applies to the electric heat only in either legacy mode or communicating mode operation

--- indicates Not Rated

* Within thermostat user menu, CTK0* communicating thermostat will display 20kW for OFF- OFF- ON dipswitch selection, 21kW for OFF-OFF-OFF dipswitch selection.

† For match up with a 2 ton outdoor unit: Heater kit application shall not exceed 10 kW. Airflow for 5 kW up to 10 kW heater kits shall be set to 850 cfm speed tap of ON-ON-ON.

†† For match up with a 3 ton outdoor unit: Heater kit application shall not exceed 15 kW. Airflow for 5 kW up to 15 kW heater kits shall be set to 1300 cfm speed tap of ON-OFF-ON.

††† For match up with a 3.5 ton outdoor unit: Heater kit application shall not exceed 20 kW. Airflow for 5 kW up to 20 kW heater kits shall be set to 1500 cfm speed tap of ON-OFF-OFF

** 3 kW heater kit is not applicable for this indoor application.

Heater Kit Model		Circuit 1			Circuit 2			Single-Point Kit	
		Heater Amps	MCA[1]	MOP[2]	Heater Amps	MCA[1]	MOP[2]	MCA[1]	MOP[2]
AVPTC25B14AB		0/0	4.9/4.9	15/15	---	---	---	---	---
HKSX03XC - 208 V	No Breaker	10.8	18.4	20	---	---	---	---	---
HKSX05XC - 208 V		17.3	27	30	---	---	---	---	---
HKSX06XC - 208 V		21.7	32	35	---	---	---	---	---
HKSX08XC - 208 V		28.9	41	45	---	---	---	---	---
HKSX10XC - 208 V		34.7	48	50	---	---	---	---	---
HKSC05XC - 208 V	Breaker	17.3	27	30	---	---	---	---	---
HKSC08XC - 208 V		28.9	41	45	---	---	---	---	---
HKSC10XC - 208 V		34.7	48	50	---	---	---	---	---
HKSC15XA - 208 V		34.7	48	50	17.3	21.7	25	69.9	70
HKSX03XC - 240 V	No Breaker	12.5	21	25	---	---	---	---	---
HKSX05XC - 240 V		20	29.9	30	---	---	---	---	---
HKSX06XC - 240 V		25	36.1	40	---	---	---	---	---
HKSX08XC - 240 V		33.3	46.5	50	---	---	---	---	---
HKSX10XC - 240 V		40	54.9	60	---	---	---	---	---
HKSC05XC - 240 V	Breaker	20	29.9	30	---	---	---	---	---
HKSC08XC - 240 V		33.3	46.5	50	---	---	---	---	---
HKSC10XC - 240 V		40	54.9	60	---	---	---	---	---
HKSC15XB - 240 V		40	54.9	60	20	25	25	79.9	80
AVPTC29B14AB		0/0	6.5/6.5	15/15	---	---	---	---	---
HKSX03XC - 208 V	No Breaker	10.8	20	20	---	---	---	---	---
HKSX05XC - 208 V		17.3	28.2	30	---	---	---	---	---
HKSX06XC - 208 V		21.7	33.6	35	---	---	---	---	---
HKSX08XC - 208 V		28.9	42.6	45	---	---	---	---	---
HKSX10XC - 208 V		34.7	49.8	50	---	---	---	---	---
HKSC05XC - 208 V	Breaker	17.3	28.2	30	---	---	---	---	---
HKSC08XC - 208 V		28.9	42.6	45	---	---	---	---	---
HKSC10XC - 208 V		34.7	49.8	50	---	---	---	---	---
HKSC15XA - 208 V		34.7	49.8	50	17.3	21.7	25	71.5	80
HKSX03XC - 240 V	No Breaker	12.5	22.1	25	---	---	---	---	---
HKSX05XC - 240 V		20	32	35	---	---	---	---	---
HKSX06XC - 240 V		25	38	40	---	---	---	---	---
HKSX08XC - 240 V		33.3	48	50	---	---	---	---	---
HKSX10XC - 240 V		40	57	60	---	---	---	---	---
HKSC05XC - 240 V	Breaker	20	32	35	---	---	---	---	---
HKSC08XC - 240 V		33.3	48	50	---	---	---	---	---
HKSC10XC - 240 V		40	57	60	---	---	---	---	---
HKSC15XB - 240 V		40	57	60	20	25	25	81.5	90
AVPTC30C14AB		0.0/0.0	4.9/4.9	15/15	---	---	---	---	---
HKSX03XC - 208 V	No Breaker	10.8	18	20	---	---	---	---	---
HKSX05XC - 208 V		17.3	27	30	---	---	---	---	---
HKSX06XC - 208 V		21.7	32	35	---	---	---	---	---
HKSX08XC - 208 V		28.9	41	45	---	---	---	---	---
HKSX10XC - 208 V		34.7	48	50	---	---	---	---	---

See notes on page 21.

Heater Kit Model		Circuit 1			Circuit 2			Single-Point Kit	
		Heater Amps	MCA[1]	MOP[2]	Heater Amps	MCA[1]	MOP[2]	MCA[1]	MOP[2]
HKSC05XC - 208 V	Breaker	17.3	27	30	---	---	---	---	---
HKSC08XC - 208 V		28.9	41	45	---	---	---	---	---
HKSC10XC - 208 V		34.7	48	50	---	---	---	---	---
HKSX03XC - 240 V	No Breaker	12.5	21	25	---	---	---	---	---
HKSX05XC - 240 V		20.0	30	30	---	---	---	---	---
HKSX06XC - 240 V		25.0	36	40	---	---	---	---	---
HKSX08XC - 240 V		33.3	47	50	---	---	---	---	---
HKSX10XC - 240 V		40.0	55	60	---	---	---	---	---
HKSC05XC - 240 V	Breaker	20.0	30	30	---	---	---	---	---
HKSC08XC - 240 V		33.3	47	50	---	---	---	---	---
HKSC10XC - 240 V		40.0	55	60	---	---	---	---	---
AVPTC31C14AD		0/0	6.5/6.5	15/15	---	---	---	---	---
HKSX03XC - 208 V	No Breaker	10.8	20	20	---	---	---	---	---
HKSX05XC - 208 V		17.3	28.2	30	---	---	---	---	---
HKSX06XC - 208 V		21.7	33.6	35	---	---	---	---	---
HKSX08XC - 208 V		28.9	42.6	45	---	---	---	---	---
HKSX10XC - 208 V		34.7	49.8	50	---	---	---	---	---
HKSC05XC - 208 V	Breaker	17.3	28.2	30	---	---	---	---	---
HKSC08XC - 208 V		28.9	42.6	45	---	---	---	---	---
HKSC10XC - 208 V		34.7	49.8	50	---	---	---	---	---
HKSC15XA - 208 V		34.7	49.8	50	17.3	21.7	25	71.5	80
HKSC19CA - 208 V		34.7	49.8	50	34.7	43.3	45	93.2	100
HKSC15XF - 208 V ^		0	6.5	15	30	37.5	40	---	---
HKSX03XC - 240 V	No Breaker	12.5	22.1	25	---	---	---	---	---
HKSX05XC - 240 V		20	32	35	---	---	---	---	---
HKSX06XC - 240 V		25	38	40	---	---	---	---	---
HKSX08XC - 240 V		33.3	48	50	---	---	---	---	---
HKSX10XC - 240 V		40	57	60	---	---	---	---	---
HKSC05XC - 240 V	Breaker	20	32	35	---	---	---	---	---
HKSC08XC - 240 V		33.3	48	50	---	---	---	---	---
HKSC10XC - 240 V		40	57	60	---	---	---	---	---
HKSC15XB - 240 V		40	56.5	60	20	25	25	81.5	90
HKSC19CB - 240 V		40	56.5	60	40	50	50	107	110
HKSC15XF - 240 V ^		0	6.5	15	34.6	43	45	---	---
AVPTC33C14AB		0.0/0.0	4.9/4.9	15/15	---	---	---	---	---
HKSX03XC - 208 V	No Breaker	10.8	18.4	20	---	---	---	---	---
HKSX05XC - 208 V		17.3	27	30	---	---	---	---	---
HKSX06XC - 208 V		21.7	32	35	---	---	---	---	---
HKSX08XC - 208 V		28.9	41	45	---	---	---	---	---
HKSX10XC - 208 V		34.7	48	50	---	---	---	---	---
HKSC05XC - 208 V	Breaker	17.3	27	30	---	---	---	---	---
HKSC08XC - 208 V		21.7	32	35	---	---	---	---	---
HKSC10XC - 208 V		28.9	41	45	---	---	---	---	---
HKSC15XA - 208 V		34.7	48	50	17.3	21.7	25	69.9	70

See notes on page 21.

Heater Kit Model		Circuit 1			Circuit 2			Single-Point Kit	
		Heater Amps	MCA[1]	MOP[2]	Heater Amps	MCA[1]	MOP[2]	MCA[1]	MOP[2]
HKSX03XC - 240 V	No Breaker	12.5	21	25	---	---	---	---	---
HKSX05XC - 240 V		20	29.9	30	---	---	---	---	---
HKSX06XC - 240 V		25	36.1	40	---	---	---	---	---
HKSX08XC - 240 V		33.3	46.5	50	---	---	---	---	---
HKSX10XC - 240 V		40	54.9	60	---	---	---	---	---
HKSC05XC - 240 V	Breaker	20	29.9	30	---	---	---	---	---
HKSC08XC - 240 V		33.3	46.5	50	---	---	---	---	---
HKSC10XC - 240 V		40	54.9	60	---	---	---	---	---
HKSC15XB - 240 V		40	54.9	60	20	25	25	79.9	80
AVPTC35C14AA		0/0	4.9/4.9	15/15	---	---	---	---	---
HKSX03XC - 208 V	No Breaker	10.8	18.4	20	---	---	---	---	---
HKSX05XC - 208 V		17.3	27	30	---	---	---	---	---
HKSX06XC - 208 V		21.7	32	35	---	---	---	---	---
HKSX08XC - 208 V		28.9	41	45	---	---	---	---	---
HKSX10XC - 208 V		34.7	48	50	---	---	---	---	---
HKSC05XC - 208 V	Breaker	17.3	27	30	---	---	---	---	---
HKSC08XC - 208 V		28.9	41	45	---	---	---	---	---
HKSC10XC - 208 V		34.7	48	50	---	---	---	---	---
HKSC15XA - 208 V		34.7	48	50	17.3	21.7	25	69.9	70
HKSX03XC - 240 V	No Breaker	12.5	21	25	---	---	---	---	---
HKSX05XC - 240 V		20	29.9	30	---	---	---	---	---
HKSX06XC - 240 V		25	36.1	40	---	---	---	---	---
HKSX08XC - 240 V		33.3	46.5	50	---	---	---	---	---
HKSX10XC - 240 V		40	54.9	60	---	---	---	---	---
HKSC05XC - 240 V	Breaker	20	29.9	30	---	---	---	---	---
HKSC08XC - 240 V		33.3	46.5	50	---	---	---	---	---
HKSC10XC - 240 V		40	54.9	60	---	---	---	---	---
HKSC15XB - 240 V		40	54.9	60	20	25	25	79.9	80
AVPTC36C14AA		0.0/0.0	6.5/6.5	15/15	---	---	---	---	---
HKSX03XC - 208 V	No Breaker	10.8	20	20	---	---	---	---	---
HKSX05XC - 208 V		17.3	28	30	---	---	---	---	---
HKSX06XC - 208 V		21.7	34	35	---	---	---	---	---
HKSX08XC - 208 V		28.9	43	45	---	---	---	---	---
HKSX10XC - 208 V		34.7	50	50	---	---	---	---	---
HKSC05XC - 208 V	Breaker	17.3	28	30	---	---	---	---	---
HKSC08XC - 208 V		28.9	43	45	---	---	---	---	---
HKSC10XC - 208 V		34.7	50	50	---	---	---	---	---
HKSC15XA - 208 V		34.7	50	50	17.3	22	25	72	80
HKSC19CA - 208 V		34.7	50	50	34.7	43	45	93	100
HKSC15XF - 208 V ^		0.0	6.5	15	30.0	38	40	---	---
HKSC20XF - 208 V ^		0.0	6.5	15	37.5	47	50	---	---

See notes on page 21.

Heater Kit Model		Circuit 1			Circuit 2			Single-Point Kit	
		Heater Amps	MCA[1]	MOP[2]	Heater Amps	MCA[1]	MOP[2]	MCA[1]	MOP[2]
HKSX03XC - 240 V	No Breaker	12.5	22	25	---	---	---	---	---
HKSX05XC - 240 V		20.0	32	35	---	---	---	---	---
HKSX06XC - 240 V		25.0	38	40	---	---	---	---	---
HKSX08XC - 240 V		33.3	48	50	---	---	---	---	---
HKSX10XC - 240 V		40.0	57	60	---	---	---	---	---
HKSC05XC - 240 V	Breaker	20.0	32	35	---	---	---	---	---
HKSC08XC - 240 V		33.3	48	50	---	---	---	---	---
HKSC10XC - 240 V		40.0	57	60	---	---	---	---	---
HKSC15XB - 240 V		40.0	57	60	20.0	25	25	82	90
HKSC19CB - 240 V		40.0	57	60	40	50	50	107	110
HKSC15XF - 240 V ^		0.0	6.5	15	34.6	43	45	---	---
HKSC20XF - 240 ^		0.0	6.5	15	43.3	54	60	---	---
AVPTC37B14AB		0/0	6.5/6.5	15/15	---	---	---	---	---
HKSX03XC - 208 V	No Breaker	10.8	20	20	---	---	---	---	---
HKSX05XC - 208 V		17.3	28.2	30	---	---	---	---	---
HKSX06XC - 208 V		21.7	33.6	35	---	---	---	---	---
HKSX08XC - 208 V		28.9	42.6	45	---	---	---	---	---
HKSX10XC - 208 V		34.7	49.8	50	---	---	---	---	---
HKSC05XC - 208 V	Breaker	17.3	28.2	30	---	---	---	---	---
HKSC08XC - 208 V		28.9	42.6	45	---	---	---	---	---
HKSC10XC - 208 V		34.7	49.8	50	---	---	---	---	---
HKSC15XA - 208 V		34.7	49.8	50	17.3	21.7	25	71.5	80
HKSX03XC - 240 V	No Breaker	12.5	22.1	25	---	---	---	---	---
HKSX05XC - 240 V		20	32	35	---	---	---	---	---
HKSX06XC - 240 V		25	38	40	---	---	---	---	---
HKSX08XC - 240 V		33.3	48	50	---	---	---	---	---
HKSX10XC - 240 V		40	57	60	---	---	---	---	---
HKSC05XC - 240 V	Breaker	20	32	35	---	---	---	---	---
HKSC08XC - 240 V		33.3	48	50	---	---	---	---	---
HKSC10XC - 240 V		40	57	60	---	---	---	---	---
HKSC15XB - 240 V		40	57	60	20	25	25	81.5	90
AVPTC37C14AC		0/0	6.5/6.5	15/15	---	---	---	---	---
HKSX03XC - 208 V	No Breaker	---	---	---	---	---	---	---	---
HKSX05XC - 208 V		17.3	28.2	30	---	---	---	---	---
HKSX06XC - 208 V		21.7	33.6	35	---	---	---	---	---
HKSX08XC - 208 V		28.9	42.6	45	---	---	---	---	---
HKSX10XC - 208 V		34.7	49.8	50	---	---	---	---	---
HKSC05XC - 208 V	Breaker	17.3	28.2	30	---	---	---	---	---
HKSC08XC - 208 V		28.9	42.6	45	---	---	---	---	---
HKSC10XC - 208 V		34.7	49.8	50	---	---	---	---	---
HKSC15XA - 208 V		34.7	49.8	50	17.3	21.7	25	71.5	80
HKSC19CA - 208 V		34.7	49.8	50	34.7	43.3	45	93.2	100
HKSC15XF - 208 V ^		0	6.5	15	30	37.5	40	---	---

See notes on page 21.

Heater Kit Model		Circuit 1			Circuit 2			Single-Point Kit	
		Heater Amps	MCA[1]	MOP[2]	Heater Amps	MCA[1]	MOP[2]	MCA[1]	MOP[2]
HKSX03XC - 240 V	No Breaker	---	---	---	---	---	---	---	---
HKSX05XC - 240 V	No Breaker	20	32	35	---	---	---	---	---
HKSX06XC - 240 V	No Breaker	25	38	40	---	---	---	---	---
HKSX08XC - 240 V	No Breaker	33.3	48	50	---	---	---	---	---
HKSX10XC - 240 V	No Breaker	40	57	60	---	---	---	---	---
HKSC05XC - 240 V	Breaker	20	32	35	---	---	---	---	---
HKSC08XC - 240 V	Breaker	33.3	48	50	---	---	---	---	---
HKSC10XC - 240 V	Breaker	40	57	60	---	---	---	---	---
HKSC15XB - 240 V	Breaker	40	57	60	20	25	25	81.5	90
HKSC19CB - 240 V	Breaker	40	57	60	40	50	50	106.5	110
HKSC15XF - 240 V ^	Breaker	0	6.5	15	34.6	43	45	---	---
AVPTC37D14AC		0/0	6.5/6.5	15/15	---	---	---	---	---
HKSX03XC - 208 V	No Breaker	---	---	---	---	---	---	---	---
HKSX05XC - 208 V	No Breaker	17.3	28.2	30	---	---	---	---	---
HKSX06XC - 208 V	No Breaker	21.7	33.6	35	---	---	---	---	---
HKSX08XC - 208 V	No Breaker	28.9	42.6	45	---	---	---	---	---
HKSX10XC - 208 V	No Breaker	34.7	49.8	50	---	---	---	---	---
HKSC05XC - 208 V	Breaker	17.3	28.2	30	---	---	---	---	---
HKSC08XC - 208 V	Breaker	28.9	42.6	45	---	---	---	---	---
HKSC10XC - 208 V	Breaker	34.7	49.8	50	---	---	---	---	---
HKSC15XA - 208 V	Breaker	34.7	49.8	50	17.3	21.7	25	71.5	80
HKSC20DA - 208 V	Breaker	34.7	49.8	50	34.7	43.3	45	93.2	100
HKSC15XF - 208 V ^	Breaker	0	6.5	15	30	37.5	40	---	---
HKSC20XF - 208 V ^	Breaker	0	6.5	15	37.5	47	50	---	---
HKSX03XC - 240 V	No Breaker	---	---	---	---	---	---	---	---
HKSX05XC - 240 V	No Breaker	20	32	35	---	---	---	---	---
HKSX06XC - 240 V	No Breaker	25	38	40	---	---	---	---	---
HKSX08XC - 240 V	No Breaker	33.3	48	50	---	---	---	---	---
HKSX10XC - 240 V	No Breaker	40	57	60	---	---	---	---	---
HKSC05XC - 240 V	Breaker	20	32	35	---	---	---	---	---
HKSC08XC - 240 V	Breaker	33.3	48	50	---	---	---	---	---
HKSC10XC - 240 V	Breaker	40	57	60	---	---	---	---	---
HKSC15XB - 240 V	Breaker	40	57	60	20	25	25	81.5	90
HKSC20DB - 240 V	Breaker	40	57	60	40	50	50	106.5	110
HKSC15XF - 240 V ^	Breaker	0	6.5	15	34.6	43	45	---	---
HKSC20XF - 240 V ^	Breaker	0	6.5	15	43	54	60	---	---
AVPTC39C14AC		0.0/0.0	6.5/6.5	15/15	---	---	---	---	---
HKSX03XC - 208 V	No Breaker	---	---	---	---	---	---	---	---
HKSX05XC - 208 V	No Breaker	17.3	28.2	30	---	---	---	---	---
HKSX06XC - 208 V	No Breaker	21.7	33.6	35	---	---	---	---	---
HKSX08XC - 208 V	No Breaker	28.9	42.6	45	---	---	---	---	---
HKSX10XC - 208 V	No Breaker	34.7	49.8	50	---	---	---	---	---

See notes on page 21.

Heater Kit Model		Circuit 1			Circuit 2			Single-Point Kit	
		Heater Amps	MCA[1]	MOP[2]	Heater Amps	MCA[1]	MOP[2]	MCA[1]	MOP[2]
HKSC05XC - 208 V	Breaker	17.3	28.2	30	---	---	---	---	---
HKSC08XC - 208 V		28.9	42.6	45	---	---	---	---	---
HKSC10XC - 208 V		34.7	49.8	50	---	---	---	---	---
HKSC15XA - 208 V		34.7	49.8	50	17.3	21.7	25	71.5	80
HKSC19CA - 208 V		34.7	49.8	50	34.7	43.3	45	93.2	100
HKSC15XF - 208 V ^		0	6.5	15	30	37.5	40	---	---
HKSX03XC - 240 V	No Breaker	---	---	---	---	---	---	---	---
HKSX05XC - 240 V		20	32	35	---	---	---	---	---
HKSX06XC - 240 V		25	38	40	---	---	---	---	---
HKSX08XC - 240 V		33.3	48	50	---	---	---	---	---
HKSX10XC - 240 V		40	57	60	---	---	---	---	---
HKSC05XC - 240 V	Breaker	20	32	35	---	---	---	---	---
HKSC08XC - 240 V		33.3	48	50	---	---	---	---	---
HKSC10XC - 240 V		40	57	60	---	---	---	---	---
HKSC15XB - 240 V		40	57	60	20	25	25	81.5	90
HKSC19CB - 240 V		40	57	60	40	50	50	106.5	110
HKSC15XF - 240 V ^		0	6.5	15	34.6	43	45	---	---
AVPTC48C14AB		0.0/0.0	6.5/6.5	15/15	---	---	---	---	---
HKSX03XC - 208 V	No Breaker	10.8	20	20	---	---	---	---	---
HKSX05XC - 208 V		17.3	28	30	---	---	---	---	---
HKSX06XC - 208 V		21.7	34	35	---	---	---	---	---
HKSX08XC - 208 V		28.9	43	45	---	---	---	---	---
HKSX10XC - 208 V		34.7	50	50	---	---	---	---	---
HKSC05XC - 208 V	Breaker	17.3	28	30	---	---	---	---	---
HKSC08XC - 208 V		28.9	43	45	---	---	---	---	---
HKSC10XC - 208 V		34.7	50	50	---	---	---	---	---
HKSC15XA - 208 V		34.7	50	50	17.3	22	25	72	80
HKSC19CA - 208 V		34.7	50	50	34.7	43	45	93	100
HKSC15XF - 208 V ^		0	6.5	15	30	38	40	---	---
HKSC20XF - 208 V ^		0	6.5	15	37.5	47	50	---	---
HKSX03XC - 240 V	No Breaker	12.5	22	25	---	---	---	---	---
HKSX05XC - 240 V		20	32	35	---	---	---	---	---
HKSX06XC - 240 V		25	38	40	---	---	---	---	---
HKSX08XC - 240 V		33.3	48	50	---	---	---	---	---
HKSX10XC - 240 V		40	57	60	---	---	---	---	---
HKSC05XC - 240 V	Breaker	20	32	35	---	---	---	---	---
HKSC08XC - 240 V		33.3	48	50	---	---	---	---	---
HKSC10XC - 240 V		40	57	60	---	---	---	---	---
HKSC15XB - 240 V		40	57	60	20	25	25	82	90
HKSC19CB - 240 V		40	57	60	40	50	50	107	110
HKSC15XF - 240 V ^		0	6.5	15	34.6	43	45	---	---
HKSC20XF - 240 V ^		0	6.5	15	43.3	54	60	---	---

See notes on page 21.

Heater Kit Model		Circuit 1			Circuit 2			Single-Point Kit	
		Heater Amps	MCA[1]	MOP[2]	Heater Amps	MCA[1]	MOP[2]	MCA[1]	MOP[2]
AVPTC49C14AC		0.0/0.0	6.5/6.5	15/15	---	---	---	---	---
HKSX03XC - 208 V	No Breaker	---	---	---	---	---	---	---	---
HKSX05XC - 208 V		17.3	28.2	30	---	---	---	---	---
HKSX06XC - 208 V		21.7	33.6	35	---	---	---	---	---
HKSX08XC - 208 V		28.9	42.6	45	---	---	---	---	---
HKSX10XC - 208 V		34.7	49.8	50	---	---	---	---	---
HKSC05XC - 208 V	Breaker	17.3	28.2	30	---	---	---	---	---
HKSC08XC - 208 V		28.9	42.6	45	---	---	---	---	---
HKSC10XC - 208 V		34.7	49.8	50	---	---	---	---	---
HKSC15XA - 208 V		34.7	49.8	50	17.3	21.7	25	71.5	80
HKSC19CA - 208 V		34.7	49.8	50	34.7	43.3	45	93.2	100
HKSC15XF - 208 V ^		0	6.5	15	30	37.5	40	---	---
HKSX03XC - 240 V	No Breaker	---	---	---	---	---	---	---	---
HKSX05XC - 240 V		20	32	35	---	---	---	---	---
HKSX06XC - 240 V		25	38	40	---	---	---	---	---
HKSX08XC - 240 V		33.3	48	50	---	---	---	---	---
HKSX10XC - 240 V		40	57	60	---	---	---	---	---
HKSC05XC - 240 V	Breaker	20	32	35	---	---	---	---	---
HKSC08XC - 240 V		33.3	48	50	---	---	---	---	---
HKSC10XC - 240 V		40	57	60	---	---	---	---	---
HKSC15XB - 240 V		40	57	60	20	25	25	81.5	90
HKSC19CB - 240 V		40	57	60	40	50	50	106.5	110
HKSC15XF - 240 V ^		0	6.5	15	34.6	43	45	---	---
AVPTC49D14AB		0/0	6.5/6.5	15/15	---	---	---	---	---
HKSX03XC - 208 V	No Breaker	---	---	---	---	---	---	---	---
HKSX05XC - 208 V		17.3	28.2	30	---	---	---	---	---
HKSX06XC - 208 V		21.7	33.6	35	---	---	---	---	---
HKSX08XC - 208 V		28.9	42.6	45	---	---	---	---	---
HKSX10XC - 208 V		34.7	49.8	50	---	---	---	---	---
HKSC05XC - 208 V	Breaker	17.3	28.2	30	---	---	---	---	---
HKSC08XC - 208 V		28.9	42.6	45	---	---	---	---	---
HKSC10XC - 208 V		34.7	49.8	50	---	---	---	---	---
HKSC15XA - 208 V		34.7	49.8	50	17.3	21.7	25	71.5	80
HKSC20DA - 208 V		---	---	---	---	---	---	---	---
HKSC15XF - 208 V ^		---	---	---	---	---	---	---	---
HKSC20XF - 208 V ^		---	---	---	---	---	---	---	---
HKSC25DA - 208 V		---	---	---	---	---	---	---	---
HKSX03XC - 240 V	No Breaker	---	---	---	---	---	---	---	---
HKSX05XC - 240 V		20	32	35	---	---	---	---	---
HKSX06XC - 240 V		25	38	40	---	---	---	---	---
HKSX08XC - 240 V		33.3	48	50	---	---	---	---	---
HKSX10XC - 240 V		40	57	60	---	---	---	---	---

See notes on page 21.

Heater Kit Model		Circuit 1			Circuit 2			Single-Point Kit	
		Heater Amps	MCA[1]	MOP[2]	Heater Amps	MCA[1]	MOP[2]	MCA[1]	MOP[2]
HKSC05XC - 240 V	Breaker	20	32	35	---	---	---	---	---
HKSC08XC - 240 V		33.3	48	50	---	---	---	---	---
HKSC10XC - 240 V		40	57	60	---	---	---	---	---
HKSC15XB - 240 V		40	57	60	20	25	25	81.5	90
HKSC20DB - 240 V		---	---	---	---	---	---	---	---
HKSC15XF - 240 V ^		---	---	---	---	---	---	---	---
HKSC20XF - 240 V ^		---	---	---	---	---	---	---	---
HKSC25DB - 240 V		---	---	---	---	---	---	---	---
AVPTC59C14AC		0/0	8.6/8.6	15/15	---	---	---	---	---
HKSX03XC - 208 V	No Breaker	---	---	---	---	---	---	---	---
HKSX05XC - 208 V		17.3	30.3	35	---	---	---	---	---
HKSX06XC - 208 V		21.7	36	40	---	---	---	---	---
HKSX08XC - 208 V		28.9	45	45	---	---	---	---	---
HKSX10XC - 208 V		34.7	52	60	---	---	---	---	---
HKSC05XC - 208 V	Breaker	17.3	30.3	35	---	---	---	---	---
HKSC08XC - 208 V		28.9	45	45	---	---	---	---	---
HKSC10XC - 208 V		34.7	52	60	---	---	---	---	---
HKSC15XB[3] - 208 V		34.7	52	60	17.3	21.7	25	73.6	80
HKSC19CH - 208 V		34.7	52	60	34.7	43.3	45	95.3	100
HKSC15XF - 208 V ^		0	8.6	15	30	37.5	40	---	---
HKSC20XF - 208 V ^		---	---	---	---	---	---	---	---
HKSX03XC - 240 V	No Breaker	---	---	---	---	---	---	---	---
HKSX05XC - 240 V		20	34	35	---	---	---	---	---
HKSX06XC - 240 V		25	39.9	40	---	---	---	---	---
HKSX08XC - 240 V		33.3	50.3	60	---	---	---	---	---
HKSX10XC - 240 V		40	58.6	60	---	---	---	---	---
HKSC05XC - 240 V	Breaker	20	34	35	---	---	---	---	---
HKSC08XC - 240 V		33.3	50.3	60	---	---	---	---	---
HKSC10XC - 240 V		40	58.6	60	---	---	---	---	---
HKSC15XB - 240 V		40	58.6	60	20	25	25	83.6	90
HKSC19CB - 240 V		40	58.6	60	40	50	50	108.6	110
HKSC15XF - 240 V ^		0	8.6	15	34.6	43	45	---	---
HKSC20XF - 240 V ^		---	---	---	---	---	---	---	---
AVPTC59D14AC		0/0	8.6/8.6	15/15	---	---	---	---	---
HKSX03XC - 208 V	No Breaker	---	---	---	---	---	---	---	---
HKSX06XC - 208 V		21.7	36	40	---	---	---	---	---
HKSX08XC - 208 V		28.9	45	45	---	---	---	---	---
HKSX10XC - 208 V		34.7	52	60	---	---	---	---	---
HKSC05XC - 208 V	Breaker	17.3	30.3	35	---	---	---	---	---
HKSC08XC - 208 V		28.9	45	45	---	---	---	---	---
HKSC10XC - 208 V		34.7	52	60	---	---	---	---	---
HKSC15XB[3] - 208 V		34.7	52	60	17.3	21.7	25	73.6	80
HKSC20DH - 208 V		34.7	52	60	34.7	43.3	45	95.3	100
HKSC15XF - 208 V ^		0	8.6	15	30	37.5	40	---	---
HKSC20XF - 208 V ^		0	8.6	15	37.5	47	50	---	---

See notes on page 21.

Heater Kit Model		Circuit 1			Circuit 2			Single-Point Kit	
		Heater Amps	MCA[1]	MOP[2]	Heater Amps	MCA[1]	MOP[2]	MCA[1]	MOP[2]
HKSX03XC - 240 V		---	---	---	---	---	---	---	---
HKSX05XC - 240 V		20	34	35	---	---	---	---	---
HKSX06XC - 240 V	No Breaker	25	39.9	40	---	---	---	---	---
HKSX08XC - 240 V		33.3	50.3	60	---	---	---	---	---
HKSX10XC - 240 V		40	58.6	60	---	---	---	---	---
HKSC05XC - 240 V		20	34	35	---	---	---	---	---
HKSC08XC - 240 V		33.3	50.3	60	---	---	---	---	---
HKSC10XC - 240 V		40	58.6	60	---	---	---	---	---
HKSC15XB - 240 V	Breaker	40	58.6	60	20	25	25	83.6	90
HKSC20DB - 240 V		40	58.6	60	40	50	50	108.6	110
HKSC15XF - 240 V ^		0	8.6	15	34.6	43	45	---	---
HKSC20XF - 240 V ^		0	8.6	15	43	54	60	---	---
AVPTC60D14AA		0.0/0.0	8.6/8.6	15/15	---	---	---	---	---
HKS*03XC*		10.8/12.5	22/24	25/25	---	---	---	---	---
HKS*05XC*		17.3/20.0	30/34	35/35	---	---	---	---	---
HKS*06XC*		21.7/25.0	36/40	40/40	---	---	---	---	---
HKS*08XC*		28.9/33.3	45/50	45/60	---	---	---	---	---
HKS*10XC*		34.7/40.0	52/59	60/60	---	---	---	---	---
HKSC15*#*		34.7/40.0	52/59	60/60	17.3/20	22/25	25/25	74/84	80/90
HKSC20D#*		34.7/40.0	52/59	60/60	34.7/40.0	43/50	45/50	95/109	100/110
HKSC15XF*		0.0/0.0	8.6/8.6	15/15	30.0/34.6	38/43	40/45	---	---
HKSC20XF*		0.0/0.0	8.6/8.6	15/15	37.5/43.3	47/54	50/60	---	---
HKSC25DC*		52.0/60.0	74/84	80/90	35/40	43/50	45/50	117/134	125/150
AVPTC61D14AC		0/0	8.6/8.6	15/15	---	---	---	---	---
HKSX03XC - 208 V		---	---	---	---	---	---	---	---
HKSX05XC - 208 V		17.3	30.3	35	---	---	---	---	---
HKSX06XC - 208 V	No Breaker	21.7	36	40	---	---	---	---	---
HKSX08XC - 208 V		28.9	45	45	---	---	---	---	---
HKSX10XC - 208 V		34.7	52	60	---	---	---	---	---
HKSC05XC - 208 V		17.3	30.3	35	---	---	---	---	---
HKSC08XC - 208 V		28.9	45	45	---	---	---	---	---
HKSC10XC - 208 V		34.7	52	60	---	---	---	---	---
HKSC15XB[3] - 208 V	Breaker	34.7	52	60	17.3	21.7	25	73.6	80
HKSC20DH - 208 V		34.7	52	60	34.7	43.3	45	95.3	100
HKSC15XF - 208 V ^		0	8.6	15	30	37.5	40	---	---
HKSC20XF - 208 V ^		0	8.6	15	37.5	47	50	---	---
HKSC25DA - 208 V		52	73.6	80	34.7	43.3	45	117	125
HKSX03XC - 240 V		---	---	---	---	---	---	---	---
HKSX05XC - 240 V		20	34	35	---	---	---	---	---
HKSX06XC - 240 V	No Breaker	25	39.9	40	---	---	---	---	---
HKSX08XC - 240 V		33.3	50.3	60	---	---	---	---	---
HKSX10XC - 240 V		40	58.6	60	---	---	---	---	---

See notes on page 21.

Heater Kit Model		Circuit 1			Circuit 2			Single-Point Kit	
		Heater Amps	MCA[1]	MOP[2]	Heater Amps	MCA[1]	MOP[2]	MCA[1]	MOP[2]
HKSC05XC - 240 V	Breaker	20	34	35	---	---	---	---	---
HKSC08XC - 240 V		33.3	50.3	60	---	---	---	---	---
HKSC10XC - 240 V		40	58.6	60	---	---	---	---	---
HKSC15XB - 240 V		40	58.6	60	20	25	25	83.6	90
HKSC20DB - 240 V		40	58.6	60	40	50	50	108.6	110
HKSC15XF - 240 V ^		0	8.6	15	34.6	43	45	---	---
HKSC20XF - 240 V ^		0	8.6	15	43	54	60	---	---
HKSC25DB - 240 V		60	84	90	40	50	50	133.6	150

[1] Minimum Circuit Ampacity (Heater Amps + Motor Amps) X 1.25
[2] Maximum Overcurrent Protection = 2.25 X Motor Amps + Heater Amps
^ Circuit 1: Single-phase for Air Handlers Circuit 2: Three-phase for HKR3 Heater Kits
Note: The 208 or 240 in the heat kit part number field is for clarification of the nominal voltage for this model.
[3]Notation is correct as XB because technically the 240V heater kit application can be used here without any issues.

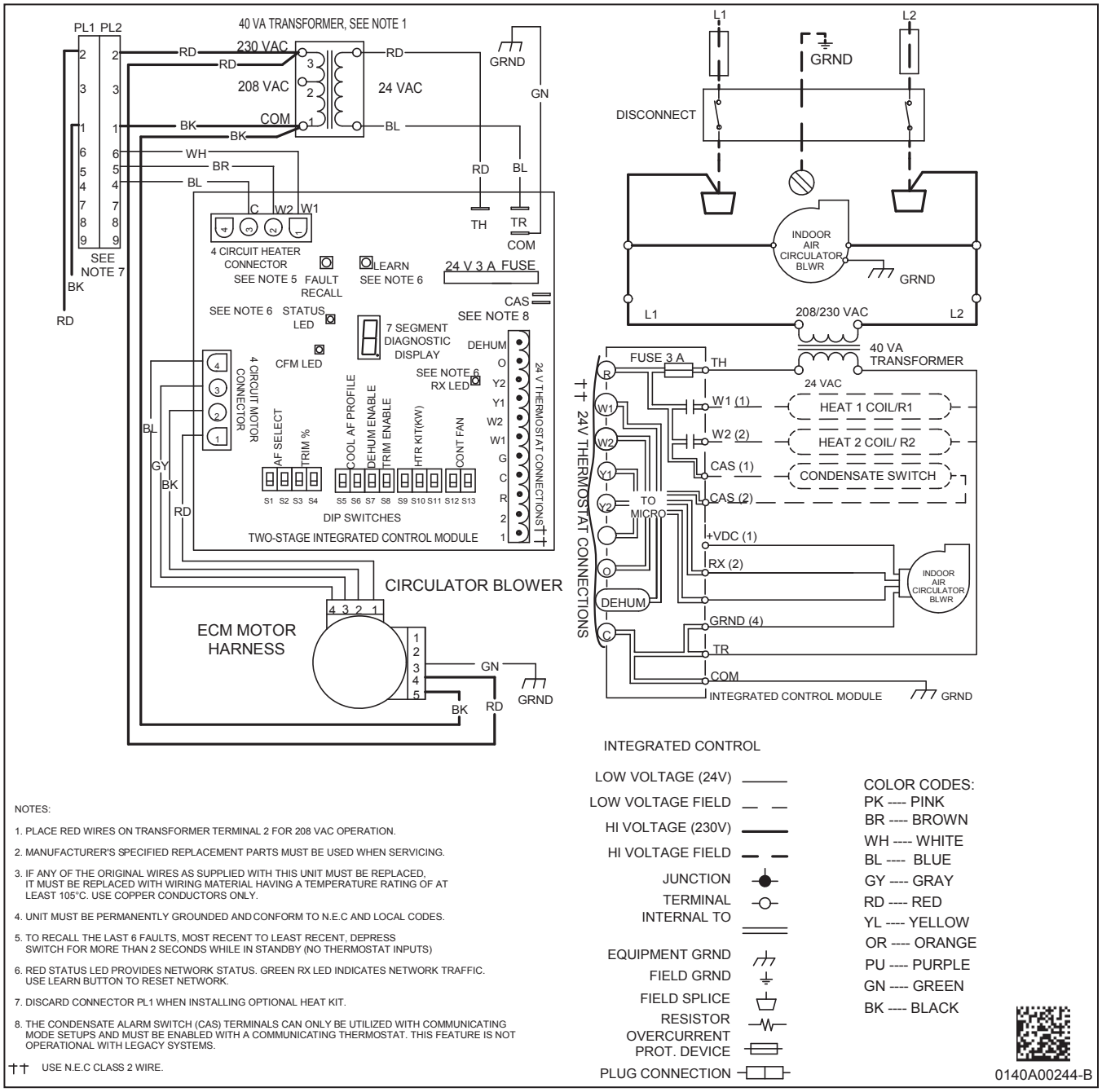

NOTES:

1. PLACE RED WIRES ON TRANSFORMER TERMINAL 2 FOR 208 VAC OPERATION.
2. MANUFACTURER'S SPECIFIED REPLACEMENT PARTS MUST BE USED WHEN SERVICING.
3. IF ANY OF THE ORIGINAL WIRES AS SUPPLIED WITH THIS UNIT MUST BE REPLACED, IT MUST BE REPLACED WITH WIRING MATERIAL HAVING A TEMPERATURE RATING OF AT LEAST 105°C. USE COPPER CONDUCTORS ONLY.
4. UNIT MUST BE PERMANENTLY GROUNDED AND CONFORM TO N.E.C AND LOCAL CODES.
5. TO RECALL THE LAST 6 FAULTS, MOST RECENT TO LEAST RECENT, DEPRESS SWITCH FOR MORE THAN 2 SECONDS WHILE IN STANDBY (NO THERMOSTAT INPUTS)
6. RED STATUS LED PROVIDES NETWORK STATUS. GREEN RX LED INDICATES NETWORK TRAFFIC. USE LEARN BUTTON TO RESET NETWORK.
7. DISCARD CONNECTOR PL1 WHEN INSTALLING OPTIONAL HEAT KIT.
8. THE CONDENSATE ALARM SWITCH (CAS) TERMINALS CAN ONLY BE UTILIZED WITH COMMUNICATING MODE SETUPS AND MUST BE ENABLED WITH A COMMUNICATING THERMOSTAT. THIS FEATURE IS NOT OPERATIONAL WITH LEGACY SYSTEMS.

†† USE N.E.C CLASS 2 WIRE.

Wiring is subject to change. Always refer to the wiring diagram on the unit for the most up-to-date wiring.

WARNING — ***High Voltage:*** Disconnect all power before servicing or installing this unit. Multiple power sources may be present. Failure to do so may cause property damage, personal injury, or death.

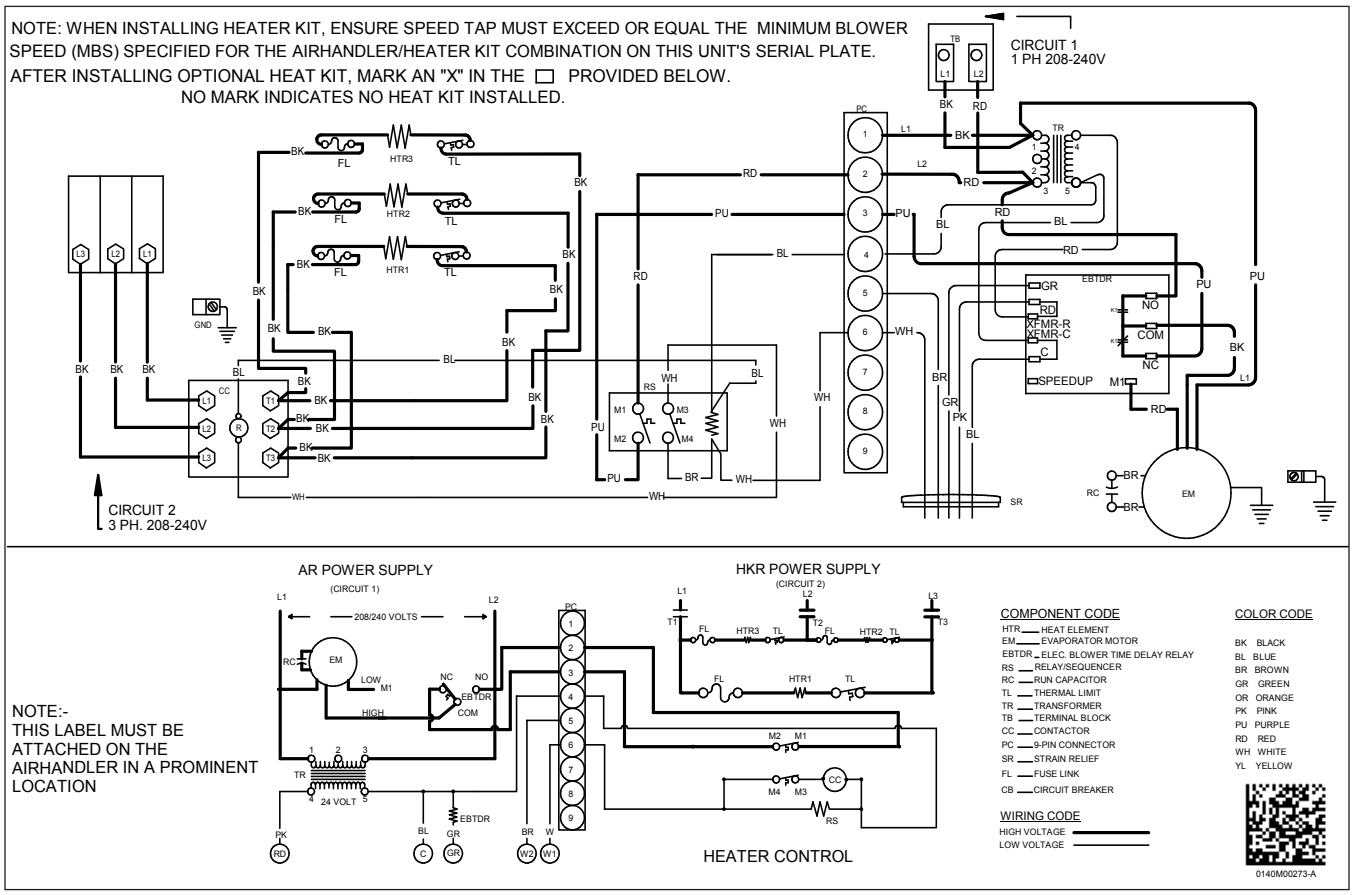

Wiring is subject to change. Always refer to the wiring diagram on the unit for the most up-to-date wiring.

⚠ **WARNING**	***High Voltage:*** Disconnect all power before servicing or installing this unit. Multiple power sources may be present. Failure to do so may cause property damage, personal injury, or death. ⚡

DOWNFLOW KITS

DFK-B	DFK-C	DFK-D
AVPTC24B14**	AVPTC30C14**	AVPTC42D14**
AVPTC25B14**	AVPTC36C14**	AVPTC48D14**
AVPTC29B14**	AVPTC48C14**	AVPTC60D14**
AVPTC35B14**	AVPTC31C14**	AVPTC37D14**
AVPTC37B14**	AVPTC33C14**	AVPTC59D14**
	AVPTC37C14**	AVPTC49D14**
	AVPTC39C14**	AVPTC61D14**
	AVPTC49C14**	
	AVPTC59C14**	

FILTERS

CHASSIS	PART #	SIZE
B	ALFH16201E	16.0" x 20.0"
C	ALFH1912201E	19.5” x 20.0”
D	ALFH20231E	23.0” x 20.0”

SINGLE POINT KIT **

MODEL	HKR-15C	HKR-20C	HKR-21C
SPW-01	X	X	X

** Must be installed along with any of the above compatible heat kits. This kit will fit any AVPTC air handler as long as a compatible heat kit is installed in the unit.