Franklin™
Air Conditioning & Heating

MBVC

Multi-Position, Variable-Speed ECM-Based, Modular Blower ComfortNet™ Compatible

Contents

Air Handler Nomenclature 2
Heater Kit Nomenclature 2
Product Specifications 3
Airflow Data 3
Heat Kit Data 4
Dimensions 5
Wiring Diagram 6

Product Features

- Variable-speed ECM blower motor
- ComfortNet™ Communicating System compatible
- Advanced configuration of the airflow and tonnage in communicating mode
- Provides constant CFM over a wide range of static pressure conditions independent of duct system
- CFM indicator
- Fault recall of six most recent faults
- Provides adjustable low CFM for efficient fan-only operation
- Improved humidity and comfort control
- Built-in compatibility with multi-stage heat pump and cooling applications
- 3 kW – 21 kW electric heat kits
- Blower section usable as electric heater
- Horizontal or vertical configuration capabilities
- 21" depth for easier attic access
- Foil-faced insulation covers the internal casing to reduce cabinet condensation
- Galvanized, leather grain-embossed finish
- Cabinet air leakage less than 2% at 1.0 inch H_20 when tested in accordance with ASHRE standard 193
- Cabinet air leakage less than 1.4% at 0.5 inch H_20 when tested in accordance with ASHRE standard 193
- AHRI certified; ETL listed

10 YEAR PARTS LIMITED WARRANTY* ComfortNet™ ALL ALUMINUM COIL AHRI CERTIFIED www.ahridirectory.org C ETL LISTED US Intertek COMPANY WITH QUALITY SYSTEM CERTIFIED BY DNV GL = ISO 9001 = COMPANY WITH ENVIRONMENTAL SYSTEM CERTIFIED BY DNV GL = ISO 14001 =

* Complete warranty details available from your local dealer or at www.franklinhvacsystems.com. To receive the 10-Year Parts Limited Warranty, online registration must be completed within 60 days of installation. Online registration is not required in California or Quebec.

MB	VC	12	00	A	A	1
1,2	3,4	5,6	7,8	9	10	11

Design Series
MB Modular Blower

Motor Speed
V Variable Speed
C ComfortNet™ Compatible

Airflow Delivered
08 800 CFM
12 1200 CFM
16 1600 CFM
20 2000 CFM

Electrical
1 208-230/60/1

Revisions
A First Series

Circuit Breaker
A No Circuit Breaker
B Circuit Breaker

Factory-installed Electric Heat
00 No Heat

HKR	*	-05	*	A
1	2	3	4,5	11

Unit Type
HKR Air Handlers & Packaged Units
HKA Air Handlers
HKP Packaged Units

Phase
None Single-Phase
3 Three-Phase

Heating Capacity @ 240 Volts
5 4.75 kW
8 7.00 kW
10 9.50 kW
15 14.25 to 15.00 kW
20 19.00 to 19.60 kW

Revisions
Engineering Revisions

Circuit Breaker
None Single- or 3-Phase Kit; No Circuit Breaker
C Single-Phase Kit w/ Circuit Breaker

Model	MBVC1200AA-1	MBVC1600AA-1	MBVC2000AA-1
Blower			
Diameter	10"	10"	11"
Width	8"	8"	10"
Electrical Data			
Voltage	208 / 230	208 / 230	208 / 230
Min Circuit Ampacity	4.9	6.5	6.5
Max. Overcurrent Device (Amps)	15	15	15
Blower Motor			
Horsepower (HP)	½	¾	¾
Ship Weight (Lbs.)	67	80	86

- Minimum Circuit Ampacity (MCA) and Maximum Overcurrent Protection (MOP) for blower without supplemental heat installed. Refer to unit nameplate for these specifications with approved accessory heaters installed.
- Condensate management kits are available for units installed in high temperature and high humidity areas. Kit number MBK0002 has beendeveloped to resolve condensate issues in the field for MBVCs and is available from the Service Parts Department. Refer to IO-849 for installation instructions.

Model	Speed Tap	Speed	0.1	0.2	0.3	0.4	0.5	0.6	0.7	0.8	0.9
MBVC1200A*	A	Low	420	415	400	400	395	390	390	390	380
	B	Low	550	545	540	540	535	530	530	525	520
	C	Low	680	675	670	665	660	655	655	650	640
	D	Low	810	805	800	800	800	795	790	785	785
	A	High	615	605	600	600	595	590	590	585	580
	B	High	805	805	800	800	800	795	790	785	780
	C	High	1010	1005	1000	1000	995	995	990	985	975
	D	High	1210	1205	1200	1200	1200	1195	1195	1190	1180
MBVC1600A*	A	Low	690	680	670	665	660	655	625	595	575
	B	Low	850	830	800	795	790	785	775	750	725
	C	Low	980	970	940	935	930	910	890	865	860
	D	Low	1110	1085	1070	1055	1045	1025	1000	990	975
	A	High	1045	1015	1000	990	975	950	935	920	900
	B	High	1245	1215	1200	1180	1175	1165	1150	1130	1115
	C	High	1415	1410	1400	1365	1360	1350	1340	1330	1320
	D	High	1605	1600	1600	1540	1530	1520	1510	1500	1490
MBVC2000A*	A	Low	835	815	800	800	795	795	790	775	750
	B	Low	1075	1070	1070	1065	1050	1045	1045	1040	1035
	C	Low	1210	1205	1200	1200	1195	1190	1190	1185	1175
	D	Low	1345	1340	1340	1320	1320	1315	1315	1305	1305
	A	High	1210	1205	1200	1195	1150	1150	1145	1135	1115
	B	High	1610	1605	1600	1540	1535	1535	1530	1520	1510
	C	High	1830	1805	1800	1785	1760	1760	1755	1750	1715
	D	High	2020	2010	2000	1995	1995	1970	1970	1965	1955

Cooling and Heat Pump Airflow

S1	S2	Speed Tap	MBVC1200 Airflow (SCFM)	MBVC1600 Airflow (SCFM)	MBVC2000 Airflow (SCFM)
off	off	A	600	1000	1200
on	off	B	800	1200	1600
off	on	C	1000	1400	1800
on	on	D	1200	1600	2000

Heat Kit Airflow

Cooling / HP / Aux Trim			Cooling Profile		
S3	S4	Trim Value	S5	S6	
off	off	0	off	off	A
on	off	10%	on	off	B
off	on	-10%	off	on	C
on	on	0	on	on	D

Notes

- The chart is for information only. For satisfactory operation, external static pressure must not exceed value shown on rating plate.
- Use the CFM adjustment factors of .98 for horizontal left, .95 for horizontal right & .96 for downflow orientations.

Models	Circuit 1			Circuit 2			Single-Point Kit	
	Heater Amps	MCA[1]	MOP[2]	Heater Amps	MCA[1]	MOP[2]	MCA[1]	MOP[2]
MBVC1200AA-1A*	0 / 0	4.9 / 4.9	15 / 15	---	---	---	---	---
HKR-03*	10.8 / 12.5	18 / 20.5	20 / 25	---	---	---	---	---
HKR-05* / 05C*	17.2 / 19.8	26 / 29.6	30 / 30	---	---	---	---	---
HKR-06*	21.7 / 25.0	32 / 36.1	35 / 40	---	---	---	---	---
HKR-08* / -08C*	25.3 / 29.2	36.5 / 41	40 / 45	---	---	---	---	---
HKR-10* / -10C*	34.3 / 39.6	47.8 / 54	50 / 60	---	---	---	---	---
HKA-15C*	34.3 / 39.6	47.8 / 54	50 / 60	17.2 / 19.8	21.4 / 24.7	25 / 25	69/79	70 / 80
MBVC1600AA-1A*	0 / 0	6.5 / 6.5	15 / 15	---	---	---	---	---
HKR-03*	10.8 / 12.5	20.1 / 22	25 / 25	---	---	---	---	---
HKR-05* / 05C*	17.2 / 19.8	27.9 / 31	30 / 35	---	---	---	---	---
HKR-06*	21.7 / 25.0	34 / 37.8	35 / 40	---	---	---	---	---
HKR-08* / -08C*	25.3 / 29.2	38.1 / 43	40 / 45	---	---	---	---	---
HKR-10* / -10C*	34.3 / 39.6	49.4 / 56	50 / 60	---	---	---	---	---
HKA-15C*	34.3 / 39.6	49.4 / 56	50 / 60	17.2 / 19.8	21.4 / 24.7	25 / 25	71/81	80 / 90
MBVC2000AA-1A*	0 / 0	6.5 / 6.5	15 / 15	---	---	---	---	---
HKR-03*	10.8 / 12.5	20.1 / 22	25 / 25	---	---	---	---	---
HKR-05* / 05C*	17.2 / 19.8	27.9 / 31	30 / 35	---	---	---	---	---
HKR-06*	21.7 / 25.0	34 / 37.8	35 / 40	---	---	---	---	---
HKR-08* / -08C*	25.3 / 29.2	38.1 / 43	40 / 45	---	---	---	---	---
HKR-10* / -10C*	34.3 / 39.6	49.4 / 56	50 / 60	---	---	---	---	---
HKA-15C*	34.3 / 39.6	49.4 / 56	50 / 60	17.2 / 19.8	21.4 / 24.7	25 / 25	70/80	70 / 80
HKA-20C*	34.3 / 39.6	49.4 / 56	50 / 60	34.3 / 39.6	42.9 / 49.5	45 / 50	92/105	100 / 110

All ampacities noted above include air handler motor amps

Circuit 1: Single-phase for Air Handlers / Circuit 2: Three-phase for HKR3 Heater Kits

[1] Minimum Circuit Ampacity (Heater Amps + Motor Amps) X 1.25

[2] Maximum Overcurrent Protection = 2.25 X Motor Amps + Heater Amps

* Revision level that may or may not be designated

C = Circuit Breaker Option

--- indicates Not Required

- Only applicable when HKA kits are included in table
  HKA meets the new UL1995 requirements for 15 and 20KW heaters
- MBVC and MBR models

Heating kW Correction Factor

Supply Voltage	240	230	220	210	208
Correction Factor	1.00	0.92	0.84	0.77	0.75

Multiply the 240-volt heating capacity by correction factors.

Side and Front Views

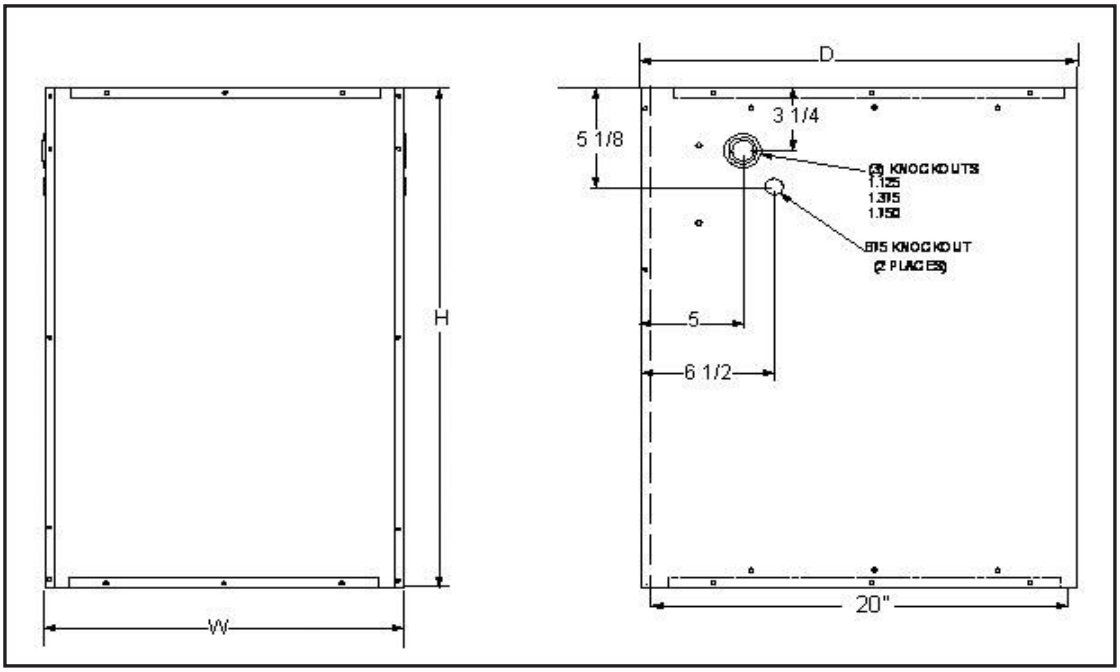

Model	Dimensions		
	Width	Depth	Height
MBVC1200AA-1	17½"	21"	26"
MBVC1600AA-1	21"	21"	30"
MBVC2000AA-1	24½"	21"	30"

Top View

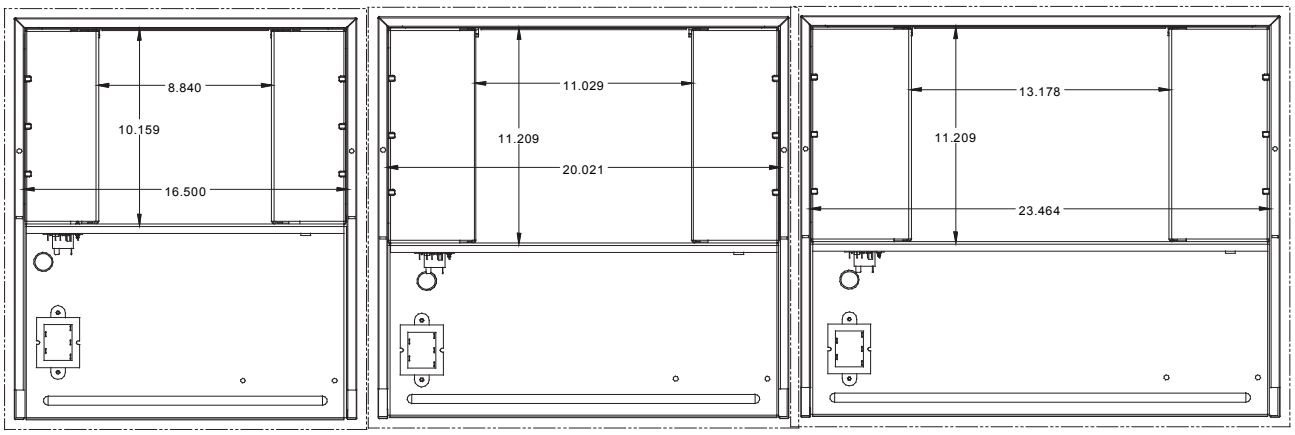

17½" **21"** **24½"**

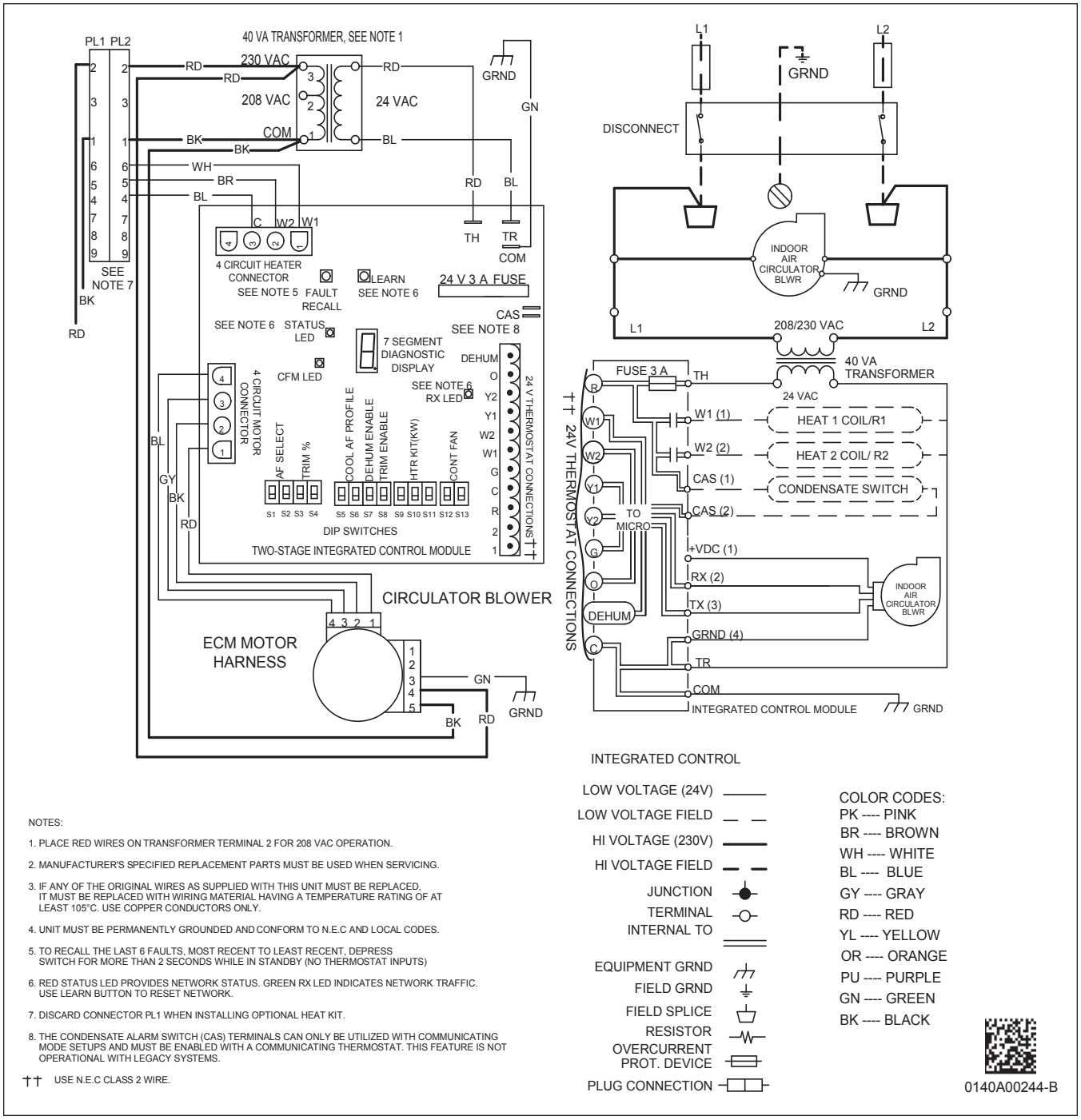

NOTES:

1. PLACE RED WIRES ON TRANSFORMER TERMINAL 2 FOR 208 VAC OPERATION.
2. MANUFACTURER'S SPECIFIED REPLACEMENT PARTS MUST BE USED WHEN SERVICING.
3. IF ANY OF THE ORIGINAL WIRES AS SUPPLIED WITH THIS UNIT MUST BE REPLACED, IT MUST BE REPLACED WITH WIRING MATERIAL HAVING A TEMPERATURE RATING OF AT LEAST 105°C. USE COPPER CONDUCTORS ONLY.
4. UNIT MUST BE PERMANENTLY GROUNDED AND CONFORM TO N.E.C AND LOCAL CODES.
5. TO RECALL THE LAST 6 FAULTS, MOST RECENT TO LEAST RECENT, DEPRESS SWITCH FOR MORE THAN 2 SECONDS WHILE IN STANDBY (NO THERMOSTAT INPUTS)
6. RED STATUS LED PROVIDES NETWORK STATUS. GREEN RX LED INDICATES NETWORK TRAFFIC. USE LEARN BUTTON TO RESET NETWORK.
7. DISCARD CONNECTOR PL1 WHEN INSTALLING OPTIONAL HEAT KIT.
8. THE CONDENSATE ALARM SWITCH (CAS) TERMINALS CAN ONLY BE UTILIZED WITH COMMUNICATING MODE SETUPS AND MUST BE ENABLED WITH A COMMUNICATING THERMOSTAT. THIS FEATURE IS NOT OPERATIONAL WITH LEGACY SYSTEMS.

†† USE N.E.C CLASS 2 WIRE.

⚠ **WARNING**	***High Voltage:*** Disconnect all power before servicing or installing this unit. Multiple power sources may be present. Failure to do so may cause property damage, personal injury, or death. ⚡

Wiring is subject to change. Always refer to the wiring diagram on the unit for the most up-to-date wiring.

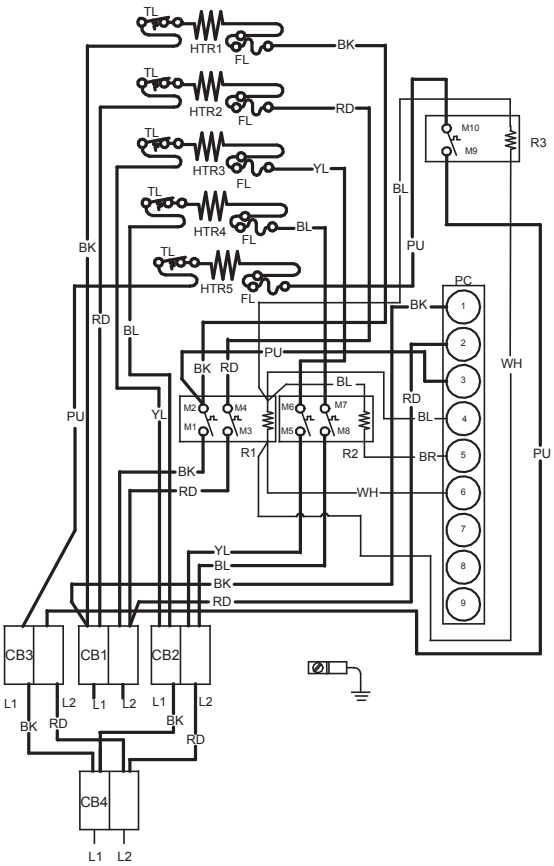

COMPONENT CODE

PC = 9 PIN CONNECTOR
HTR = HEATER ELEMENT
TL = THERMAL LMT
RS = RELAY/SEQUENCER
TB = TERMINAL BLOCK
CB = CIRCUIT BREAKER
CC = CONTACTOR
FL = FUSE LINK
EM = EVAPORATOR MOTOR
EBTDR = ELEC. BLOWER TIME DELAY
RC = RUN CAPACITOR
TR = TRANSFORMER
SR = STRAIN RELIEF

WIRING CODE:

HIGH VOLTAGE
LOW VOLTAGE

COLOR CODE

BK = BLACK
BL = BLUE
BR = BROWN
GR = GREEN
OR = ORANGE
PK = PINK
PU = PURPLE
RD = RED
WH = WHITE
YL = YELLOW

NOTE: WHEN INSTALLING HEATER KIT, ENSURE SPEED TAP MUST EXCEED OR EQUAL THE MINIMUM BLOWER SPEED (MBS) SPECIFIED FOR THE AIRHANDLER / HEATER KIT COMBINATION ON THIS UNIT'S SERIAL PLATE. AFTER INSTALLING OPTIONAL HEAT KIT, MARK AN "X" IN THE ☐ PROVIDED BELOW. NO MARK INDICATES NO HEAT KIT INSTALLED.

FIVE (5) ELEMENT ROWS ☐

NOTE:-
THIS LABEL MUST BE ATTACHED ON THE AIRHANDLER IN A PROMINENT LOCATION

0140M00274-A

⚠ **Warning**	***High Voltage:*** Disconnect all power before servicing or installing this unit. Multiple power sources may be present. Failure to do so may cause property damage, personal injury, or death. ⚡

Wiring is subject to change. Always refer to the wiring diagram on the unit for the most up-to-date wiring.

The manufacturing entity reserves the right to discontinue or change the specifications or design at any time without notice and without incurring any obligations.