Franklin™
Air Conditioning & Heating

GSX16

Cooling Capacity: 18,000 - 57,000 BTU/h

Energy-Efficient Split System Air Conditioner 1½ To 5 Tons Up to 16 SEER

Contents

Nomenclature 2
Product Specifications 3
Expanded Cooling Data 5
Dimensions 27
Wiring Diagrams 28
Accessories 31

Standard Features

- Energy-efficient compressor
- Factory-installed filter drier
- Fully charged for 15' of tubing length
- Copper tube/aluminum fin coil
- Service valves with sweat connections and easy-to-access gauge ports
- Contactor with lug connection
- Ground lug connection
- AHRI Certified
- ETL Listed

Cabinet Features

- Heavy-gauge galvanized-steel cabinet with a louvered sound control top
- Attractive Architectural Gray powder-paint finish with 500-hour salt-spray approval
- Wire fan discharge grille
- Steel louver coil guard
- Single-panel access to controls with space provided for field-installed accessories
- When properly anchored, meets the 2017 Florida Building Code unit integrity requirements for hurricane-type winds (Anchor bracket kits available.)

10 YEAR PARTS LIMITED WARRANTY*

2 YEAR UNIT REPLACEMENT LIMITED WARRANTY*

C ETL US LISTED Intertek

AHRI CERTIFIED® www.ahridirectory.org Unitary Small AC AHRI Standard 210/240 Certification applies only when the complete system is listed with AHRI.

COMPANY WITH QUALITY SYSTEM CERTIFIED BY DNV GL = ISO 9001 =

COMPANY WITH ENVIRONMENTAL SYSTEM CERTIFIED BY DNV GL = ISO 14001 =

* Complete warranty details available from your local dealer or at www.goodmanmfg.com. To receive the 2-Year Unit Replacement Limited Warranty and 10-Year Parts Limited Warranty, online registration must be completed within 60 days of installation. Online registration is not required in California or Quebec.

G	S	X	16	0	36	1	AA
1	2	3	4,5	6	7,8	9	10,11

Brand

G Goodman® Brand

Product Category

S Split System

Unit Type

X Condenser R-410A

Z Heat Pump R-410A

Efficiency

13	13 SEER	16	16 SEER
14	14 SEER	18	18 SEER

Legacy National Model

0 Legacy National Model

S Sold In Southeast and North Regions

A Sold In All Regions

Engineering

Major & Minor Revisions
(not used for inventory or ordering)

Electrical

1 208/230 V, 1 Phase, 60 Hz

2 220/240 V, 1 Phase, 50 Hz

3 208/230 V, 3 Phase, 60 Hz

Nominal Capacity

18	1½ Tons	30	2½ Tons	42	3½ Tons
19	1½ Tons	31	2½ Tons	43	3½ Tons
24	2 Tons	36	3 Tons	48	4 Tons
25	2 Tons	37	3 Tons	60	5 Tons

	GSX16 0181F*	GSX16 0241F*	GSX16 0301F*	GSX16 0311A*	GSX16 0361F*	GSX16 0371A*	GSX16 0421F*	GSX16 0481F*	GSX16 0601F*
Capacities									
Nominal Cooling (BTU/h)	18,000	23,600	29,000	30,000	34,800	36,000	42,000	45,500	54,000
SEER	16	16	16	16	16	16	16	16	16
Decibels	71.5	71.5	71.5	73.5	71.5	73	73	73	73
Compressor									
RLA	9.0	13.5	12.8	12.8	14.1	15.4	17.9	17.9	21.4
LRA	46	58.3	64	64	77	83.9	112	112	135
Condenser Fan Motor									
Horsepower	1/6	1/6	1/6	1/6	1/6	1/6	1/6	1/4	1/3
FLA	0.95	0.95	0.95	0.95	0.95	0.95	0.95	1.30	2.80
Refrigeration System									
Refrigerant Line Size [1]									
Liquid Line Size (“O.D.)	⅜"	⅜"	⅜"	⅜"	⅜"	⅜"	⅜"	⅜"	⅜"
Suction Line Size (“O.D.)	¾"	¾”	⅞"	⅞"	⅞"	⅞"	⅞"	⅞"	⅞"
Refrigerant Connection Size									
Liquid Valve Size (“O.D.)	⅜"	⅜"	⅜"	⅜"	⅜"	⅜"	⅜"	⅜"	⅜"
Suction Valve Size (“O.D.)	¾"	¾"	⅞"	⅞"	⅞"	⅞"	⅞"	⅞"	⅞"
Valve Type	Sweat	Sweat	Sweat	Sweat	Sweat	Sweat	Sweat	Sweat	Sweat
Refrigerant Charge	78	70	78	94	94	93	110	121	237
Electrical Data									
Voltage-Phase (60 Hz)	208/230-1	208/230-1	208/230-1	208/230-1	208/230-1	208/230-1	208/230-1	208/230-1	208/230-1
Minimum Circuit Ampacity [2]	12.2	17.8	17.0	17.0	18.6	20.2	23.3	23.7	29.6
Max. Overcurrent Protection [3]	20	30	25	25	30	35	40	40	50
Min / Max Volts	197/253	197/253	197/253	197/253	197/253	197/253	197/253	197/253	197/253
Electrical Conduit Size	½" or ¾"	½" or ¾"	½" or ¾"	½" or ¾"	½" or ¾"	½" or ¾"	½" or ¾"	½" or ¾"	½" or ¾"
Equipment Weight (lbs)	145	142	149	155	162	182	206	219	279
Ship Weight (lbs)	163	160	167	179	180	204	228	241	301

[1] Tested and rated in accordance with AHRI Standard 210/240
[2] Wire size should be determined in accordance with National Electrical Codes; extensive wire runs will require larger wire sizes
[3] Must use time-delay fuses or HACR-type circuit breakers of the same size as noted.

Notes

- Always check the S&R plate for electrical data on the unit being installed.
- Installer will need to supply ⅞” to 1⅛” adapters for suction line connections.
- Unit is charged with refrigerant for 15’ of ⅜” liquid line. System charge must be adjusted per Installation Instructions Final Charge Procedure.
- Installation of these units requires the specified TXV Kit to be installed on the indoor coil.
  THE SPECIFIED TXV IS DETERMINED BY THE OUTDOOR UNIT NOT THE INDOOR COIL.

	GSX16S 181A*	GSX16S 241A*	GSX16S 301A*	GSX16S 361A*	GSX16S 421A*	GSX16S 481A*
Capacities						
Nominal Cooling (BTU/h)	18,000	23,600	29,000	34,800	42,000	45,500
SEER	16	16	16	16	16	16
Decibels	71	71	73.5	73.5	73	73
Compressor						
RLA	6.0	7.7	12.8	14.1	17.9	17.9
LRA	37.5	38	64	77	112	112
Condenser Fan Motor						
Horsepower	1/6	1/6	1/6	1/6	1/6	1/4
FLA	0.95	0.95	0.95	0.95	0.95	1.30
Refrigeration System						
Refrigerant Line Size [1]						
Liquid Line Size (“O.D.)	⅜"	⅜"	⅜"	⅜"	⅜"	⅜"
Suction Line Size (“O.D.)	¾"	¾"	⅞"	⅞"	⅞"	⅞"
Refrigerant Connection Size						
Liquid Valve Size (“O.D.)	⅜"	⅜"	⅜"	⅜"	⅜"	⅜"
Suction Valve Size (“O.D.)	¾"	¾"	⅞"	⅞"	⅞"	⅞"
Valve Type	Sweat	Sweat	Sweat	Sweat	Sweat	Sweat
Refrigerant Charge	84	70	78	94	110	121
Electrical Data						
Voltage-Phase (60 Hz)	208/230-1	208/230-1	208/230-1	208/230-1	208/230-1	208/230-1
Minimum Circuit Ampacity [2]	8.5	10.6	17.0	18.6	23.3	23.7
Max. Overcurrent Protection [3]	15	15	25	30	40	40
Min / Max Volts	197/253	197/253	197/253	197/253	197/253	197/253
Electrical Conduit Size	½" or ¾"	½" or ¾"	½" or ¾"	½" or ¾"	½" or ¾"	½" or ¾"
Equipment Weight (lbs)	135	132	149	162	206	219
Ship Weight (lbs)	154	150	167	180	228	241

[1] Tested and rated in accordance with AHRI Standard 210/240

[2] Wire size should be determined in accordance with National Electrical Codes; extensive wire runs will require larger wire sizes

[3] Must use time-delay fuses or HACR-type circuit breakers of the same size as noted.

Notes

- Always check the S&R plate for electrical data on the unit being installed.
- Installer will need to supply ⅞” to 1⅛” adapters for suction line connections.
- Unit is charged with refrigerant for 15’ of ⅜” liquid line. System charge must be adjusted per Installation Instructions Final Charge Procedure.
- Installation of these units requires the specified TXV Kit to be installed on the indoor coil.
  THE SPECIFIED TXV IS DETERMINED BY THE OUTDOOR UNIT NOT THE INDOOR COIL.

Expanded Cooling Data — GSX16[0/A]181**/CA*F3636*6D*+TXV

			Outdoor Ambient Temperature																							
			65ºF				75ºF				85ºF				95ºF				105ºF				115ºF			
			Entering Indoor Wet Bulb Temperature																							
IDB	Airflow		59	63	67	71	59	63	67	71	59	63	67	71	59	63	67	71	59	63	67	71	59	63	67	71
70	525	MBh	15.8	16.4	17.9	-	15.4	16.0	17.5	-	15.1	15.6	17.1	-	14.7	15.2	16.7	-	14.0	14.5	15.9	-	12.9	13.4	14.7	-
		S/T	0.68	0.57	0.40	-	0.71	0.59	0.41	-	0.73	0.61	0.42	-	0.75	0.63	0.43	-	0.78	0.65	0.45	-	0.78	0.66	0.45	-
		ΔT	19	16	12	-	19	17	13	-	19	17	13	-	19	17	13	-	19	16	13	-	18	15	12	-
		kW	1.18	1.20	1.23	-	1.26	1.28	1.31	-	1.32	1.35	1.38	-	1.38	1.41	1.45	-	1.43	1.46	1.50	-	1.47	1.50	1.54	-
		Amps	4.3	4.3	4.5	-	4.6	4.7	4.8	-	4.9	5.0	5.2	-	5.2	5.4	5.5	-	5.6	5.7	5.9	-	5.9	6.0	6.2	-
		Hi PR	199	214	226	-	223	240	254	-	254	273	289	-	289	311	329	-	326	350	370	-	360	387	409	-
		Lo PR	101	108	118	-	107	114	125	-	111	119	129	-	117	125	136	-	123	130	142	-	127	135	147	-
	650	MBh	17.1	17.7	19.4	-	16.7	17.3	19.0	-	16.3	16.9	18.5	-	15.9	16.5	18.1	-	15.1	15.7	17.2	-	14.0	14.5	15.9	-
		S/T	0.71	0.59	0.41	-	0.73	0.61	0.43	-	0.75	0.63	0.44	-	0.78	0.65	0.45	-	0.81	0.67	0.47	-	0.81	0.68	0.47	-
		ΔT	17	15	11	-	17	15	11	-	17	15	11	-	18	15	12	-	17	15	11	-	16	14	11	-
		kW	1.21	1.23	1.26	-	1.28	1.31	1.34	-	1.35	1.38	1.41	-	1.41	1.44	1.48	-	1.46	1.49	1.53	-	1.51	1.54	1.58	-
		Amps	4.4	4.5	4.6	-	4.7	4.8	4.9	-	5.1	5.2	5.3	-	5.4	5.5	5.7	-	5.7	5.8	6.0	-	6.0	6.2	6.4	-
		Hi PR	205	221	233	-	230	248	262	-	262	282	298	-	298	321	339	-	336	361	381	-	371	399	421	-
		Lo PR	105	111	122	-	111	118	128	-	115	122	133	-	121	128	140	-	126	135	147	-	131	139	152	-
	675	MBh	17.1	17.7	19.4	-	16.7	17.3	19.0	-	16.3	16.9	18.5	-	15.9	16.5	18.1	-	15.1	15.7	17.2	-	14.0	14.5	15.9	-
		S/T	0.71	0.59	0.41	-	0.73	0.61	0.43	-	0.75	0.63	0.44	-	0.78	0.65	0.45	-	0.81	0.67	0.47	-	0.81	0.68	0.47	-
		ΔT	17	14	11	-	17	14	11	-	17	15	11	-	17	15	11	-	17	14	11	-	16	13	10	-
		kW	1.21	1.23	1.26	-	1.28	1.31	1.34	-	1.35	1.38	1.41	-	1.41	1.44	1.48	-	1.46	1.49	1.53	-	1.51	1.54	1.58	-
		Amps	4.4	4.5	4.6	-	4.7	4.8	4.9	-	5.1	5.2	5.3	-	5.4	5.5	5.7	-	5.7	5.8	6.0	-	6.0	6.2	6.4	-
		Hi PR	205	221	233	-	230	248	262	-	262	282	298	-	298	321	339	-	336	361	381	-	371	399	421	-
		Lo PR	105	111	122	-	111	118	128	-	115	122	133	-	121	128	140	-	126	135	147	-	131	139	152	-
75	525	MBh	16.1	16.5	17.9	19.2	15.7	16.2	17.5	18.8	15.3	15.8	17.1	18.3	15.0	**15.4**	16.7	17.9	14.2	14.6	15.8	17.0	13.2	13.5	14.7	15.7
		S/T	0.78	0.69	0.53	0.34	0.81	0.72	0.55	0.35	0.83	0.74	0.56	0.36	0.85	**0.76**	0.58	0.37	0.88	0.79	0.60	0.39	0.89	0.80	0.60	0.39
		ΔT	22	20	16	11	22	20	17	12	22	20	17	12	22	**21**	17	12	22	20	17	11	21	19	16	11
		kW	1.19	1.21	1.24	1.28	1.27	1.29	1.32	1.36	1.33	1.36	1.39	1.43	1.39	**1.42**	1.46	1.50	1.44	1.47	1.51	1.55	1.48	1.51	1.56	1.60
		Amps	4.3	4.4	4.5	4.7	4.6	4.7	4.9	5.0	5.0	5.1	5.2	5.4	5.3	**5.4**	5.6	5.8	5.6	5.7	5.9	6.1	5.9	6.1	6.3	6.5
		Hi PR	201	216	229	238	226	243	257	268	257	276	292	304	292	**315**	332	347	329	354	374	390	363	391	413	431
		Lo PR	103	109	119	127	108	115	126	134	113	120	131	139	118	**126**	137	146	124	132	144	153	128	136	149	159
	650	MBh	17.4	17.9	19.4	20.8	17.0	17.5	19.0	20.3	16.6	17.1	18.5	19.9	16.2	**16.7**	18.1	19.4	15.4	15.8	17.2	18.4	14.3	14.7	15.9	17.1
		S/T	0.81	0.72	0.55	0.35	0.84	0.75	0.57	0.36	0.86	0.77	0.58	0.37	0.88	**0.79**	0.60	0.38	0.92	0.82	0.62	0.40	0.93	0.83	0.63	0.40
		ΔT	20	18	15	10	20	19	15	10	20	19	15	10	20	**19**	15	11	20	18	15	10	19	17	14	10
		kW	1.21	1.24	1.27	1.30	1.29	1.32	1.35	1.39	1.36	1.39	1.42	1.46	1.42	**1.45**	1.49	1.53	1.47	1.50	1.54	1.59	1.52	1.55	1.59	1.64
		Amps	4.4	4.5	4.6	4.8	4.7	4.8	5.0	5.2	5.1	5.2	5.4	5.6	5.4	**5.6**	5.7	5.9	5.8	5.9	6.1	6.3	6.1	6.2	6.4	6.7
		Hi PR	207	223	236	246	233	250	264	276	265	285	301	314	301	**324**	343	357	339	365	385	402	375	403	426	444
		Lo PR	106	112	123	131	112	119	130	138	116	123	135	144	122	**130**	142	151	128	136	148	158	132	141	153	163
	675	MBh	17.4	17.9	19.4	20.8	17.0	17.5	19.0	20.3	16.6	17.1	18.5	19.9	16.2	**16.7**	18.1	19.4	15.4	15.8	17.2	18.4	14.3	14.7	15.9	17.1
		S/T	0.81	0.72	0.55	0.35	0.84	0.75	0.57	0.36	0.86	0.77	0.58	0.37	0.88	**0.79**	0.60	0.38	0.92	0.82	0.62	0.40	0.93	0.83	0.63	0.40
		ΔT	19	18	14	10	19	18	15	10	19	18	15	10	20	**18**	15	10	19	18	15	10	18	17	14	9
		kW	1.21	1.24	1.27	1.30	1.29	1.32	1.35	1.39	1.36	1.39	1.42	1.46	1.42	**1.45**	1.49	1.53	1.47	1.50	1.54	1.59	1.52	1.55	1.59	1.64
		Amps	4.4	4.5	4.6	4.8	4.7	4.8	5.0	5.2	5.1	5.2	5.4	5.6	5.4	**5.6**	5.7	5.9	5.8	5.9	6.1	6.3	6.1	6.2	6.4	6.7
		Hi PR	207	223	236	246	233	250	264	276	265	285	301	314	301	**324**	343	357	339	365	385	402	375	403	426	444
		Lo PR	106	112	123	131	112	119	130	138	116	123	135	144	122	**130**	142	151	128	136	148	158	132	141	153	163

IDB: Entering Indoor Dry Bulb Temperature

Shaded area reflects ACCA (TVA) conditions

Amps = outdoor unit amps (comp.+fan)

High and low pressures are measured at the liquid and suction service valves.

kW = Total system power

Expanded Cooling Data — GSX16[0/A]181**/CA*F3636*6D*+TXV (cont.)

			Outdoor Ambient Temperature																							
			65ºF				75ºF				85ºF				95ºF				105ºF				115ºF			
			Entering Indoor Wet Bulb Temperature																							
IDB	Airflow		59	63	67	71	59	63	67	71	59	63	67	71	59	63	67	71	59	63	67	71	59	63	67	71
80	525	MBh	16.4	16.7	17.9	19.1	16.0	16.3	17.4	18.6	15.6	15.9	17.0	18.2	15.2	15.6	16.6	17.8	14.5	14.8	15.8	16.9	13.4	13.7	14.6	15.6
		S/T	0.85	0.80	0.65	0.49	0.88	0.83	0.67	0.50	0.91	0.85	0.69	0.52	0.93	0.88	0.71	0.53	0.97	0.91	0.74	0.55	0.98	0.92	0.75	0.56
		ΔT	24	23	20	16	25	24	21	16	25	24	21	16	25	24	21	17	25	24	20	16	23	22	19	15
		kW	1.20	1.22	1.25	1.28	1.27	1.30	1.33	1.37	1.34	1.37	1.40	1.44	1.40	1.43	1.47	1.51	1.45	1.48	1.52	1.57	1.49	1.52	1.57	1.61
		Amps	4.3	4.4	4.6	4.7	4.6	4.7	4.9	5.1	5.0	5.1	5.3	5.5	5.3	5.5	5.6	5.8	5.7	5.8	6.0	6.2	6.0	6.1	6.3	6.5
		Hi PR	203	219	231	241	228	245	259	270	259	279	295	307	295	318	336	350	332	358	378	394	367	395	417	435
		Lo PR	104	110	120	128	109	116	127	135	114	121	132	141	119	127	139	148	125	133	145	155	129	138	150	160
	650	MBh	17.7	18.1	19.4	20.7	17.3	17.7	18.9	20.2	16.9	17.3	18.5	19.7	16.5	16.8	**18.0**	19.2	15.7	16.0	17.1	18.3	14.5	14.8	15.8	16.9
		S/T	0.88	0.83	0.67	0.50	0.92	0.86	0.70	0.52	0.94	0.88	0.72	0.54	0.97	0.91	**0.74**	0.55	1.00	0.94	0.77	0.57	1.00	0.95	0.77	0.58
		ΔT	22	21	18	15	22	21	19	15	22	22	19	15	23	22	**19**	15	22	21	19	15	21	20	17	14
		kW	1.22	1.24	1.28	1.31	1.30	1.32	1.36	1.40	1.37	1.40	1.43	1.48	1.43	1.46	**1.50**	1.54	1.48	1.51	1.56	1.60	1.53	1.56	1.60	1.65
		Amps	4.4	4.5	4.7	4.8	4.8	4.9	5.0	5.2	5.1	5.3	5.4	5.6	5.5	5.6	**5.8**	6.0	5.8	5.9	6.1	6.4	6.1	6.3	6.5	6.7
		Hi PR	209	225	238	248	235	253	267	279	267	288	304	317	304	328	**346**	361	343	369	389	406	378	407	430	449
		Lo PR	107	114	124	132	113	120	131	140	117	125	136	145	123	131	**143**	152	129	137	150	160	133	142	155	165
	675	MBh	17.7	18.1	19.4	20.7	17.3	17.7	18.9	20.2	16.9	17.3	18.5	19.7	16.5	16.8	18.0	19.2	15.7	16.0	17.1	18.3	14.5	14.8	15.8	16.9
		S/T	0.88	0.83	0.67	0.50	0.92	0.86	0.70	0.52	0.94	0.88	0.72	0.54	0.97	0.91	0.74	0.55	1.00	0.94	0.77	0.57	1.00	0.95	0.77	0.58
		ΔT	21	20	18	14	22	21	18	14	22	21	18	14	22	21	18	14	21	21	18	14	20	19	17	13
		kW	1.22	1.24	1.28	1.31	1.30	1.32	1.36	1.40	1.37	1.40	1.43	1.48	1.43	1.46	1.50	1.54	1.48	1.51	1.56	1.60	1.53	1.56	1.60	1.65
		Amps	4.4	4.5	4.7	4.8	4.8	4.9	5.0	5.2	5.1	5.3	5.4	5.6	5.5	5.6	5.8	6.0	5.8	5.9	6.1	6.4	6.1	6.3	6.5	6.7
		Hi PR	209	225	238	248	235	253	267	279	267	288	304	317	304	328	346	361	343	369	389	406	378	407	430	449
		Lo PR	107	114	124	132	113	120	131	140	117	125	136	145	123	131	143	152	129	137	150	160	133	142	155	165
85	525	MBh	16.6	17.0	17.8	19.0	16.3	16.6	17.4	18.5	15.9	16.2	16.9	18.1	15.5	15.8	16.5	17.6	14.7	15.0	15.7	16.8	13.6	13.9	14.5	15.5
		S/T	0.89	0.86	0.78	0.63	0.93	0.89	0.81	0.65	0.95	0.92	0.83	0.67	0.98	0.95	0.85	0.69	1.00	0.98	0.89	0.72	1.00	0.99	0.89	0.72
		ΔT	26	26	24	21	26	26	25	21	26	26	25	21	27	26	25	21	26	26	24	21	24	24	23	20
		kW	1.21	1.23	1.26	1.29	1.28	1.31	1.34	1.38	1.35	1.38	1.41	1.45	1.41	1.44	1.48	1.52	1.46	1.49	1.53	1.58	1.51	1.53	1.58	1.63
		Amps	4.4	4.5	4.6	4.7	4.7	4.8	4.9	5.1	5.1	5.2	5.3	5.5	5.4	5.5	5.7	5.9	5.7	5.8	6.0	6.2	6.0	6.2	6.4	6.6
		Hi PR	205	221	233	243	230	248	262	273	262	282	298	310	298	321	339	354	336	361	381	398	371	399	421	439
		Lo PR	105	111	121	129	110	118	128	137	115	122	133	142	121	128	140	149	126	134	147	156	131	139	152	162
	650	MBh	18.0	18.4	19.3	20.5	17.6	18.0	18.8	20.1	17.2	17.5	18.4	19.6	16.8	17.1	17.9	19.1	15.9	16.2	17.0	18.2	14.8	15.0	15.8	16.8
		S/T	0.93	0.89	0.81	0.65	0.96	0.93	0.84	0.68	0.98	0.95	0.86	0.70	1.00	0.98	0.89	0.72	1.00	1.00	0.92	0.75	1.00	1.00	0.93	0.75
		ΔT	24	23	22	19	24	24	22	19	24	24	22	19	24	24	22	19	23	23	22	19	21	21	21	18
		kW	1.23	1.25	1.29	1.32	1.31	1.33	1.37	1.41	1.38	1.41	1.44	1.49	1.44	1.47	1.51	1.55	1.49	1.52	1.57	1.61	1.54	1.57	1.62	1.66
		Amps	4.5	4.6	4.7	4.9	4.8	4.9	5.1	5.2	5.2	5.3	5.5	5.7	5.5	5.7	5.8	6.0	5.9	6.0	6.2	6.4	6.2	6.3	6.5	6.8
		Hi PR	212	228	240	251	237	255	270	281	270	291	307	320	308	331	349	364	346	372	393	410	382	411	434	453
		Lo PR	108	115	125	133	114	121	132	141	118	126	137	146	124	132	144	154	130	139	151	161	135	143	157	167
	675	MBh	18.0	18.4	19.3	20.5	17.6	18.0	18.8	20.1	17.2	17.5	18.4	19.6	16.8	17.1	17.9	19.1	15.9	16.2	17.0	18.2	14.8	15.0	15.8	16.8
		S/T	0.93	0.89	0.81	0.65	0.96	0.93	0.84	0.68	0.98	0.95	0.86	0.70	1.00	0.98	0.89	0.72	1.00	1.00	0.92	0.75	1.00	1.00	0.93	0.75
		ΔT	23	22	21	18	23	23	21	19	23	23	21	19	23	23	22	19	22	22	21	18	20	20	20	17
		kW	1.23	1.25	1.29	1.32	1.31	1.33	1.37	1.41	1.38	1.41	1.44	1.49	1.44	1.47	1.51	1.55	1.49	1.52	1.57	1.61	1.54	1.57	1.62	1.66
		Amps	4.5	4.6	4.7	4.9	4.8	4.9	5.1	5.2	5.2	5.3	5.5	5.7	5.5	5.7	5.8	6.0	5.9	6.0	6.2	6.4	6.2	6.3	6.5	6.8
		Hi PR	212	228	240	251	237	255	270	281	270	291	307	320	308	331	349	364	346	372	393	410	382	411	434	453
		Lo PR	108	115	125	133	114	121	132	141	118	126	137	146	124	132	144	154	130	139	151	161	135	143	157	167

IDB: Entering Indoor Dry Bulb Temperature

Shaded area reflects AHRI conditions

Amps = outdoor unit amps (comp.+fan)

High and low pressures are measured at the liquid and suction service valves.

kW = Total system power

Expanded Cooling Data — GSX16S181**/CA*F3636*6D*+TXV

			Outdoor Ambient Temperature																							
			65ºF				75ºF				85ºF				95ºF				105ºF				115ºF			
			Entering Indoor Wet Bulb Temperature																							
IDB	Airflow		59	63	67	71	59	63	67	71	59	63	67	71	59	63	67	71	59	63	67	71	59	63	67	71
70	0	MBh	15.8	16.4	17.9	-	15.4	16.0	17.5	-	15.1	15.6	17.1	-	14.7	15.2	16.7	-	14.0	14.5	15.9	-	12.9	13.4	14.7	-
		S/T	0.69	0.57	0.40	-	0.71	0.59	0.41	-	0.73	0.61	0.42	-	0.75	0.63	0.44	-	0.78	0.65	0.45	-	0.79	0.66	0.46	-
		ΔT	19.0	16.4	12.5	-	19.2	16.6	12.6	-	19.2	16.7	12.6	-	19.4	16.8	12.7	-	19.1	16.5	12.6	-	17.9	15.5	11.7	-
		kW	0.93	0.95	0.98	-	1.00	1.02	1.05	-	1.06	1.09	1.12	-	1.12	1.14	1.18	-	1.17	1.19	1.23	-	1.21	1.23	1.28	-
		Amps	4.2	4.3	4.4	-	4.5	4.6	4.7	-	4.9	5.0	5.1	-	5.2	5.3	5.5	-	5.5	5.6	5.8	-	5.8	5.9	6.1	-
		Hi PR	195	210	222	-	219	236	249	-	249	268	283	-	284	306	323	-	320	344	363	-	353	380	401	-
		Lo PR	105	112	122	-	111	118	129	-	116	123	134	-	122	129	141	-	127	136	148	-	132	140	153	-
	0	MBh	16.6	17.2	18.9	-	16.2	16.8	18.4	-	15.8	16.4	18.0	-	15.5	16.0	17.5	-	14.7	15.2	16.7	-	13.6	14.1	15.4	-
		S/T	0.70	0.58	0.40	-	0.72	0.60	0.42	-	0.74	0.62	0.43	-	0.76	0.64	0.44	-	0.79	0.66	0.46	-	0.80	0.67	0.46	-
		ΔT	17.7	15.4	11.7	-	18.0	15.5	11.8	-	18.0	15.6	11.8	-	18.1	15.7	11.9	-	17.9	15.5	11.7	-	16.7	14.4	11.0	-
		kW	0.94	0.96	0.99	-	1.01	1.03	1.07	-	1.07	1.10	1.13	-	1.13	1.16	1.19	-	1.18	1.21	1.25	-	1.22	1.25	1.29	-
		Amps	4.2	4.3	4.5	-	4.6	4.7	4.8	-	4.9	5.0	5.2	-	5.2	5.4	5.5	-	5.5	5.7	5.9	-	5.9	6.0	6.2	-
		Hi PR	198	213	225	-	222	239	253	-	253	272	287	-	288	310	327	-	324	349	368	-	358	385	407	-
		Lo PR	107	114	124	-	113	120	131	-	117	125	136	-	123	131	143	-	129	137	150	-	134	142	155	-
	0	MBh	17.1	17.7	19.4	-	16.7	17.3	19.0	-	16.3	16.9	18.5	-	15.9	16.5	18.1	-	15.1	15.7	17.2	-	14.0	14.5	15.9	-
		S/T	0.71	0.59	0.41	-	0.74	0.62	0.43	-	0.76	0.63	0.44	-	0.78	0.65	0.45	-	0.81	0.68	0.47	-	0.82	0.68	0.47	-
		ΔT	17.2	14.9	11.3	-	17.5	15.1	11.5	-	17.5	15.1	11.5	-	17.6	15.2	11.6	-	17.3	15.0	11.4	-	16.2	14.0	10.6	-
		kW	0.95	0.97	1.00	-	1.02	1.05	1.08	-	1.09	1.11	1.15	-	1.15	1.17	1.21	-	1.20	1.22	1.26	-	1.24	1.27	1.31	-
		Amps	4.3	4.4	4.5	-	4.6	4.7	4.9	-	5.0	5.1	5.3	-	5.3	5.4	5.6	-	5.6	5.8	5.9	-	5.9	6.1	6.3	-
		Hi PR	202	217	229	-	226	243	257	-	257	277	292	-	293	315	333	-	330	355	374	-	364	392	414	-
		Lo PR	109	116	126	-	115	122	133	-	119	127	139	-	125	133	146	-	131	140	153	-	136	144	158	-
75	0	MBh	16.1	16.5	17.9	19.2	15.7	16.2	17.5	18.8	15.3	15.8	17.1	18.3	15.0	15.4	16.7	17.9	14.2	14.6	15.8	17.0	13.2	13.5	14.7	15.7
		S/T	0.78	0.70	0.53	0.34	0.81	0.72	0.55	0.35	0.83	0.74	0.56	0.36	0.86	0.77	0.58	0.37	0.89	0.79	0.60	0.39	0.90	0.80	0.61	0.39
		ΔT	22.0	20.2	16.6	11.4	22.2	20.5	16.8	11.6	22.2	20.5	16.8	11.6	22.4	20.6	16.9	11.7	22.1	20.3	16.7	11.5	20.6	19.0	15.6	10.7
		kW	0.93	0.95	0.98	1.02	1.01	1.03	1.06	1.10	1.07	1.09	1.13	1.17	1.13	1.15	1.19	1.23	1.18	1.20	1.24	1.29	1.22	1.25	1.29	1.33
		Amps	4.2	4.3	4.5	4.6	4.5	4.6	4.8	5.0	4.9	5.0	5.2	5.4	5.2	5.3	5.5	5.7	5.5	5.7	5.8	6.0	5.8	6.0	6.2	6.4
		Hi PR	197	213	224	234	222	238	252	263	252	271	286	299	287	309	326	340	323	347	367	383	357	384	405	423
		Lo PR	106	113	124	132	112	120	131	139	117	124	136	145	123	131	143	152	129	137	149	159	133	142	155	165
	0	MBh	16.9	17.4	18.8	20.2	16.5	17.0	18.4	19.7	16.1	16.6	18.0	19.3	15.7	16.2	17.5	18.8	14.9	15.4	16.6	17.9	13.8	14.2	15.4	16.5
		S/T	0.79	0.71	0.54	0.35	0.82	0.73	0.56	0.36	0.84	0.75	0.57	0.37	0.87	0.78	0.59	0.38	0.90	0.81	0.61	0.39	0.91	0.81	0.62	0.40
		ΔT	20.5	18.9	15.5	10.7	20.8	19.1	15.7	10.8	20.8	19.1	15.7	10.8	20.9	19.3	15.8	10.9	20.6	19.0	15.6	10.7	19.3	17.7	14.5	10.0
		kW	0.94	0.96	1.00	1.03	1.02	1.04	1.07	1.11	1.08	1.11	1.14	1.18	1.14	1.17	1.21	1.25	1.19	1.22	1.26	1.30	1.23	1.26	1.30	1.35
		Amps	4.3	4.4	4.5	4.7	4.6	4.7	4.8	5.0	5.0	5.1	5.2	5.4	5.3	5.4	5.6	5.8	5.6	5.7	5.9	6.1	5.9	6.0	6.2	6.5
		Hi PR	200	215	227	237	225	242	255	266	255	275	290	303	291	313	331	345	327	352	372	388	362	389	411	429
		Lo PR	108	115	125	133	114	121	132	141	118	126	138	147	124	132	145	154	130	139	151	161	135	143	157	167
	0	MBh	17.4	17.9	19.4	20.8	17.0	17.5	19.0	20.3	16.6	17.1	18.5	19.9	16.2	16.7	18.1	19.4	15.4	15.8	17.2	18.4	14.3	14.7	15.9	17.1
		S/T	0.81	0.72	0.55	0.35	0.84	0.75	0.57	0.37	0.86	0.77	0.58	0.37	0.89	0.79	0.60	0.39	0.92	0.82	0.62	0.40	0.93	0.83	0.63	0.40
		ΔT	19.9	18.4	15.0	10.4	20.2	18.6	15.2	10.5	20.2	18.6	15.2	10.5	20.3	18.7	15.3	10.6	20.0	18.5	15.1	10.4	18.7	17.2	14.1	9.8
		kW	0.96	0.98	1.01	1.04	1.03	1.06	1.09	1.13	1.10	1.12	1.16	1.20	1.16	1.18	1.22	1.26	1.21	1.23	1.28	1.32	1.25	1.28	1.32	1.37
		Amps	4.3	4.4	4.6	4.7	4.7	4.8	4.9	5.1	5.0	5.2	5.3	5.5	5.4	5.5	5.7	5.9	5.7	5.8	6.0	6.2	6.0	6.1	6.3	6.6
		Hi PR	204	219	231	241	228	246	260	271	260	280	295	308	296	318	336	351	333	358	378	395	368	396	418	436
		Lo PR	110	117	127	136	116	123	135	143	121	128	140	149	127	135	147	157	133	141	154	164	137	146	159	170

IDB: Entering Indoor Dry Bulb Temperature (ºF)
High and low pressures are measured at the liquid and suction service valves.

Shaded area reflects ACCA (TVA) conditions

MBH = Net Total Capacity (1000 Btu/hr)
S/T = Sensible To Total Capacity Ratio

HI PR = Pressure at liquid service valve, psig
LO PR = Pressure at vapor service valve, psig

Amps = outdoor unit amps (comp.+fan)
kW = Total system power

Expanded Cooling Data — GSX16S181**/CA*F3636*6D*+TXV (cont.)

			Outdoor Ambient Temperature																							
			65ºF				75ºF				85ºF				95ºF				105ºF				115ºF			
			Entering Indoor Wet Bulb Temperature																							
IDB	Airflow		59	63	67	71	59	63	67	71	59	63	67	71	59	63	67	71	59	63	67	71	59	63	67	71
80	0	MBh	16.4	16.7	17.9	19.1	16.0	16.3	17.4	18.6	15.6	15.9	17.0	18.2	15.2	15.6	16.6	17.8	14.5	14.8	15.8	16.9	13.4	13.7	14.6	15.6
		S/T	0.86	0.80	0.65	0.49	0.89	0.83	0.68	0.51	0.91	0.85	0.69	0.52	0.94	0.88	0.72	0.54	0.97	0.91	0.74	0.56	0.98	0.92	0.75	0.56
		ΔT	24.5	23.5	20.4	16.3	24.8	23.8	20.7	16.5	24.8	23.8	20.7	16.5	25.0	24.0	20.8	16.7	24.7	23.6	20.6	16.4	23.0	22.1	19.2	15.3
		kW	0.94	0.96	0.99	1.03	1.02	1.04	1.07	1.11	1.08	1.10	1.14	1.18	1.14	1.16	1.20	1.24	1.19	1.21	1.25	1.30	1.23	1.26	1.30	1.34
		Amps	4.3	4.4	4.5	4.6	4.6	4.7	4.8	5.0	5.0	5.1	5.2	5.4	5.3	5.4	5.6	5.7	5.6	5.7	5.9	6.1	5.9	6.0	6.2	6.4
		Hi PR	199	215	227	236	224	241	254	265	255	274	289	302	290	312	329	344	326	351	371	387	360	388	410	427
		Lo PR	108	114	125	133	114	121	132	141	118	126	137	146	124	132	144	153	130	138	151	161	134	143	156	166
	0	MBh	17.2	17.6	18.8	20.1	16.8	17.2	18.3	19.6	16.4	16.8	17.9	19.1	16.0	16.3	17.5	18.7	15.2	15.5	16.6	17.7	14.1	14.4	15.4	16.4
		S/T	0.87	0.81	0.66	0.50	0.90	0.84	0.69	0.51	0.92	0.87	0.70	0.53	0.95	0.89	0.73	0.54	0.99	0.93	0.76	0.56	1.00	0.94	0.76	0.57
		ΔT	22.9	21.9	19.1	15.2	23.2	22.2	19.3	15.4	23.2	22.2	19.3	15.4	23.4	22.4	19.5	15.6	23.0	22.1	19.2	15.3	21.5	20.6	17.9	14.3
		kW	0.95	0.97	1.00	1.04	1.03	1.05	1.08	1.12	1.09	1.12	1.15	1.19	1.15	1.18	1.22	1.26	1.20	1.23	1.27	1.31	1.24	1.27	1.31	1.36
		Amps	4.3	4.4	4.5	4.7	4.6	4.7	4.9	5.1	5.0	5.1	5.3	5.5	5.3	5.4	5.6	5.8	5.6	5.8	6.0	6.2	6.0	6.1	6.3	6.5
		Hi PR	202	218	230	240	227	244	258	269	258	278	293	306	294	316	334	348	331	356	376	392	365	393	415	433
		Lo PR	109	116	127	135	115	122	134	142	120	127	139	148	126	134	146	155	132	140	153	163	136	145	158	169
	0	MBh	17.7	18.1	19.4	20.7	17.3	17.7	18.9	20.2	16.9	17.3	18.5	19.7	16.5	16.8	18.0	19.2	15.7	16.0	17.1	18.3	14.5	14.8	15.8	16.9
		S/T	0.89	0.83	0.68	0.51	0.92	0.86	0.70	0.52	0.94	0.88	0.72	0.54	1.00	0.91	0.74	0.56	1.00	0.95	0.77	0.58	1.00	0.96	0.78	0.58
		ΔT	22.2	21.3	18.5	14.8	22.5	21.6	18.8	15.0	22.5	21.6	18.8	15.0	23.3	21.8	18.9	15.1	22.2	21.4	18.7	14.9	20.5	20.0	17.4	13.9
		kW	0.96	0.99	1.02	1.05	1.04	1.06	1.10	1.14	1.11	1.13	1.17	1.21	1.17	1.19	1.23	1.28	1.22	1.25	1.29	1.33	1.26	1.29	1.33	1.38
		Amps	4.4	4.5	4.6	4.8	4.7	4.8	5.0	5.1	5.1	5.2	5.4	5.5	5.4	5.5	5.7	5.9	5.7	5.9	6.0	6.3	6.0	6.2	6.4	6.6
		Hi PR	206	221	234	244	231	248	262	273	262	282	298	311	299	322	340	354	336	362	382	399	372	400	422	440
		Lo PR	111	118	129	137	117	125	136	145	122	129	141	151	128	136	148	158	134	143	156	166	139	147	161	171
85	0	MBh	16.6	17.0	17.8	19.0	16.3	16.6	17.4	18.5	15.9	16.2	16.9	18.1	15.5	**15.8**	16.5	17.6	14.7	15.0	15.7	16.8	13.6	13.9	14.5	15.5
		S/T	0.90	0.87	0.78	0.63	0.93	0.90	0.81	0.66	0.95	0.92	0.83	0.67	0.98	**0.95**	0.86	0.70	1.00	0.99	0.89	0.72	1.00	0.99	0.90	0.73
		ΔT	26.1	25.7	24.3	21.0	26.5	26.0	24.6	21.3	26.5	26.1	24.6	21.3	26.7	**26.2**	24.8	21.5	25.8	25.9	24.5	21.2	23.9	24.2	22.8	19.8
		kW	0.95	0.97	1.00	1.03	1.02	1.05	1.08	1.12	1.09	1.11	1.15	1.19	1.15	**1.17**	1.21	1.25	1.20	1.22	1.26	1.31	1.24	1.27	1.31	1.36
		Amps	4.3	4.4	4.5	4.7	4.6	4.7	4.9	5.0	5.0	5.1	5.3	5.4	5.3	**5.4**	5.6	5.8	5.6	5.8	5.9	6.1	5.9	6.1	6.3	6.5
		Hi PR	201	217	229	239	226	243	257	268	257	277	292	305	293	**315**	333	347	329	355	374	390	364	392	414	431
		Lo PR	109	116	126	134	115	122	133	142	119	127	138	147	125	**133**	145	155	131	140	152	162	136	144	158	168
	0	MBh	17.5	17.8	18.7	19.9	17.1	17.4	18.2	19.5	16.7	17.0	17.8	19.0	16.3	**16.6**	17.4	18.5	15.5	15.8	16.5	17.6	14.3	14.6	15.3	16.3
		S/T	0.91	0.88	0.79	0.64	0.94	0.91	0.82	0.67	0.97	0.93	0.84	0.68	1.00	**0.96**	0.87	0.71	1.00	1.00	0.90	0.73	1.00	1.00	0.91	0.74
		ΔT	24.4	24.0	22.7	19.6	24.7	24.3	23.0	19.9	24.7	24.3	23.0	19.9	24.9	**24.5**	23.2	20.1	23.7	24.1	22.8	19.8	21.9	22.4	21.3	18.5
		kW	0.96	0.98	1.01	1.04	1.03	1.06	1.09	1.13	1.10	1.13	1.16	1.20	1.16	**1.19**	1.23	1.27	1.21	1.24	1.28	1.32	1.25	1.28	1.33	1.37
		Amps	4.4	4.4	4.6	4.7	4.7	4.8	4.9	5.1	5.0	5.2	5.3	5.5	5.4	**5.5**	5.7	5.9	5.7	5.8	6.0	6.2	6.0	6.1	6.3	6.6
		Hi PR	204	220	232	242	229	247	260	272	261	280	296	309	297	**319**	337	352	334	359	379	396	369	397	419	437
		Lo PR	110	117	128	136	116	124	135	144	121	129	140	149	127	**135**	147	157	133	142	155	165	138	146	160	170
	0	MBh	18.0	18.4	19.3	20.5	17.6	18.0	18.8	20.1	17.2	17.5	18.4	19.6	16.8	**17.1**	17.9	19.1	15.9	16.2	17.0	18.2	14.8	15.0	15.8	16.8
		S/T	0.93	0.90	0.81	0.66	0.96	0.93	0.84	0.68	0.99	0.95	0.86	0.70	1.00	**0.98**	0.89	0.72	1.00	1.00	0.92	0.75	1.00	1.00	0.93	0.75
		ΔT	23.7	23.3	22.1	19.1	24.0	23.6	22.3	19.3	24.0	23.6	22.4	19.3	23.7	**23.8**	22.5	19.5	22.5	23.0	22.2	19.2	20.9	21.3	20.7	17.9
		kW	0.97	0.99	1.03	1.06	1.05	1.07	1.11	1.14	1.12	1.14	1.18	1.22	1.18	**1.20**	1.24	1.29	1.23	1.26	1.30	1.34	1.27	1.30	1.34	1.39
		Amps	4.4	4.5	4.6	4.8	4.7	4.8	5.0	5.2	5.1	5.2	5.4	5.6	5.5	**5.6**	5.7	6.0	5.8	5.9	6.1	6.3	6.1	6.2	6.4	6.7
		Hi PR	208	224	236	246	233	251	265	276	265	285	301	314	302	**325**	343	358	340	365	386	403	375	404	426	445
		Lo PR	112	119	130	138	118	126	137	146	123	131	143	152	129	**137**	150	160	135	144	157	167	140	149	163	173

IDB: Entering Indoor Dry Bulb Temperature
High and low pressures are measured at the liquid and suction service valves.

Shaded area reflects ACCA (TVA) conditions
MBH = Net Total Capacity (1000 Btu/hr)
S/T = Sensible To Total Capacity Ratio

HI PR = Pressure at liquid service valve, psig
LO PR = Pressure at vapor service valve, psig

Amps = outdoor unit amps (comp.+fan)
kW = Total system power

Expanded Cooling Data — GSX16[0/A]241**/CA*F3636*6D*+TXV

			Outdoor Ambient Temperature																							
			65ºF				75ºF				85ºF				95ºF				105ºF				115ºF			
			Entering Indoor Wet Bulb Temperature																							
IDB	Airflow		59	63	67	71	59	63	67	71	59	63	67	71	59	63	67	71	59	63	67	71	59	63	67	71
70	700	MBh	22.1	22.9	25.1	-	21.6	22.4	24.5	-	21.1	21.9	23.9	-	20.6	21.3	23.4	-	19.5	20.3	22.2	-	18.1	18.8	20.6	-
		S/T	0.69	0.58	0.40	-	0.72	0.60	0.42	-	0.74	0.61	0.43	-	0.76	0.63	0.44	-	0.79	0.66	0.46	-	0.80	0.66	0.46	-
		ΔT	20	17	13	-	20	18	13	-	20	18	13	-	21	18	13	-	20	18	13	-	19	16	12	-
		kW	1.54	1.57	1.61	-	1.64	1.67	1.72	-	1.74	1.77	1.82	-	1.82	1.86	1.91	-	1.89	1.93	1.99	-	1.95	1.99	2.05	-
		Amps	5.7	5.8	6.0	-	6.1	6.3	6.5	-	6.6	6.8	7.0	-	7.1	7.3	7.5	-	7.5	7.7	8.0	-	8.0	8.2	8.4	-
		Hi PR	205	221	233	-	230	248	262	-	262	282	298	-	298	321	339	-	336	361	381	-	371	399	421	-
		Lo PR	103	109	119	-	109	116	126	-	113	120	131	-	119	126	138	-	124	132	144	-	129	137	149	-
	750	MBh	22.5	23.3	25.5	-	21.9	22.7	24.9	-	21.4	22.2	24.3	-	20.9	21.6	23.7	-	19.8	20.6	22.5	-	18.4	19.1	20.9	-
		S/T	0.72	0.60	0.42	-	0.74	0.62	0.43	-	0.76	0.64	0.44	-	0.79	0.66	0.46	-	0.82	0.68	0.47	-	0.82	0.69	0.48	-
		ΔT	20	17	13	-	20	17	13	-	20	17	13	-	20	17	13	-	20	17	13	-	19	16	12	-
		kW	1.56	1.59	1.63	-	1.66	1.70	1.75	-	1.76	1.79	1.85	-	1.84	1.88	1.94	-	1.91	1.95	2.01	-	1.98	2.02	2.08	-
		Amps	5.8	5.9	6.1	-	6.2	6.4	6.6	-	6.7	6.9	7.1	-	7.2	7.4	7.6	-	7.6	7.8	8.1	-	8.1	8.3	8.6	-
		Hi PR	209	225	237	-	234	252	266	-	267	287	303	-	304	327	345	-	342	368	388	-	377	406	429	-
		Lo PR	105	111	122	-	111	118	128	-	115	122	133	-	121	128	140	-	126	135	147	-	131	139	152	-
	900	MBh	23.2	24.1	26.4	-	22.7	23.5	25.8	-	22.2	23.0	25.2	-	21.6	22.4	24.5	-	20.5	21.3	23.3	-	19.0	19.7	21.6	-
		S/T	0.76	0.64	0.44	-	0.79	0.66	0.46	-	0.81	0.68	0.47	-	0.84	0.70	0.48	-	0.87	0.73	0.50	-	0.88	0.73	0.51	-
		ΔT	18	16	12	-	18	16	12	-	18	16	12	-	18	16	12	-	18	16	12	-	17	15	11	-
		kW	1.58	1.61	1.65	-	1.69	1.72	1.77	-	1.78	1.82	1.87	-	1.87	1.91	1.97	-	1.94	1.98	2.04	-	2.01	2.05	2.11	-
		Amps	5.9	6.0	6.2	-	6.3	6.5	6.7	-	6.9	7.0	7.3	-	7.3	7.5	7.7	-	7.8	8.0	8.2	-	8.2	8.4	8.7	-
		Hi PR	213	229	242	-	239	257	272	-	272	293	309	-	310	333	352	-	348	375	396	-	385	414	437	-
		Lo PR	107	114	124	-	113	120	131	-	117	125	136	-	123	131	143	-	129	137	150	-	133	142	155	-
75	700	MBh	22.5	23.2	25.1	26.9	22.0	22.6	24.5	26.3	21.4	22.1	23.9	25.6	20.9	**21.5**	23.3	25.0	19.9	20.5	22.1	23.8	18.4	19.0	20.5	22.0
		S/T	0.79	0.70	0.53	0.34	0.82	0.73	0.55	0.36	0.84	0.75	0.57	0.36	0.86	**0.77**	0.58	0.38	0.90	0.80	0.61	0.39	0.90	0.81	0.61	0.39
		ΔT	23	21	18	12	24	22	18	12	24	22	18	12	24	**22**	18	12	23	22	18	12	22	20	16	11
		kW	1.55	1.58	1.62	1.67	1.66	1.69	1.74	1.79	1.75	1.78	1.84	1.89	1.83	**1.87**	1.93	1.99	1.90	1.94	2.00	2.06	1.96	2.00	2.07	2.13
		Amps	5.7	5.9	6.1	6.3	6.2	6.3	6.5	6.8	6.7	6.9	7.1	7.3	7.2	**7.3**	7.6	7.8	7.6	7.8	8.0	8.3	8.0	8.2	8.5	8.8
		Hi PR	207	223	236	246	233	250	264	276	265	285	301	314	301	**324**	343	357	339	365	385	402	375	403	426	444
		Lo PR	104	111	121	128	110	117	127	136	114	121	132	141	120	**127**	139	148	126	134	146	155	130	138	151	161
	750	MBh	22.8	23.5	25.4	27.3	22.3	23.0	24.9	26.7	21.8	22.4	24.3	26.0	21.2	**21.9**	23.7	25.4	20.2	20.8	22.5	24.1	18.7	19.2	20.8	22.4
		S/T	0.82	0.73	0.55	0.36	0.85	0.76	0.57	0.37	0.87	0.78	0.59	0.38	0.90	**0.80**	0.61	0.39	0.93	0.83	0.63	0.40	0.94	0.84	0.63	0.41
		ΔT	23	21	17	12	23	21	17	12	23	21	17	12	23	**21**	18	12	23	21	17	12	21	20	16	11
		kW	1.57	1.60	1.64	1.69	1.68	1.71	1.76	1.81	1.77	1.81	1.86	1.92	1.86	**1.89**	1.95	2.01	1.93	1.97	2.03	2.09	1.99	2.03	2.09	2.16
		Amps	5.8	6.0	6.1	6.4	6.3	6.4	6.6	6.9	6.8	7.0	7.2	7.5	7.3	**7.4**	7.7	8.0	7.7	7.9	8.2	8.5	8.2	8.4	8.6	9.0
		Hi PR	211	227	240	250	237	255	269	281	269	290	306	319	307	**330**	348	363	345	371	392	409	381	410	433	452
		Lo PR	106	112	123	131	112	119	130	138	116	123	135	144	122	**130**	142	151	128	136	148	158	132	141	153	163
	900	MBh	23.6	24.3	26.3	28.3	23.1	23.8	25.7	27.6	22.5	23.2	25.1	27.0	22.0	**22.6**	24.5	26.3	20.9	21.5	23.3	25.0	19.3	19.9	21.6	23.1
		S/T	0.87	0.78	0.59	0.38	0.90	0.80	0.61	0.39	0.92	0.83	0.62	0.40	0.95	**0.85**	0.64	0.41	0.99	0.88	0.67	0.43	1.00	0.89	0.67	0.43
		ΔT	21	19	16	11	21	20	16	11	21	20	16	11	21	**20**	16	11	21	19	16	11	20	18	15	10
		kW	1.59	1.62	1.67	1.72	1.70	1.73	1.79	1.84	1.80	1.83	1.89	1.95	1.88	**1.92**	1.98	2.04	1.96	2.00	2.06	2.12	2.02	2.06	2.13	2.19
		Amps	5.9	6.1	6.3	6.5	6.4	6.5	6.7	7.0	6.9	7.1	7.3	7.6	7.4	**7.6**	7.8	8.1	7.9	8.0	8.3	8.6	8.3	8.5	8.8	9.1
		Hi PR	215	232	245	255	241	260	274	286	275	296	312	326	313	**337**	355	371	352	379	400	417	389	418	442	461
		Lo PR	108	115	125	133	114	121	132	141	118	126	137	146	124	**132**	144	154	130	139	151	161	135	143	157	167

IDB: Entering Indoor Dry Bulb Temperature

Shaded area reflects ACCA (TVA) conditions

Amps = outdoor unit amps (comp.+fan)

High and low pressures are measured at the liquid and suction service valves.

kW = Total system power

Expanded Cooling Data — GSX16[0/A]241**/CA*F3636*6D*+TXV (cont.)

			Outdoor Ambient Temperature																							
			65ºF				75ºF				85ºF				95ºF				105ºF				115ºF			
			Entering Indoor Wet Bulb Temperature																							
IDB	Airflow		59	63	67	71	59	63	67	71	59	63	67	71	59	63	67	71	59	63	67	71	59	63	67	71
80	700	MBh	22.9	23.4	25.0	26.7	22.4	22.8	24.4	26.1	21.8	22.3	23.8	25.5	21.3	21.8	23.2	24.8	20.2	20.7	22.1	23.6	18.7	19.1	20.5	21.9
		S/T	0.86	0.81	0.66	0.49	0.90	0.84	0.68	0.51	0.92	0.86	0.70	0.52	0.95	0.89	0.72	0.54	0.98	0.92	0.75	0.56	0.99	0.93	0.76	0.57
		ΔT	26	25	22	17	26	25	22	18	26	25	22	18	27	25	22	18	26	25	22	17	24	23	20	16
		kW	1.56	1.59	1.63	1.68	1.67	1.70	1.75	1.80	1.76	1.80	1.85	1.91	1.85	1.88	1.94	2.00	1.92	1.96	2.02	2.08	1.98	2.02	2.08	2.15
		Amps	5.8	5.9	6.1	6.3	6.2	6.4	6.6	6.8	6.8	6.9	7.1	7.4	7.2	7.4	7.6	7.9	7.7	7.9	8.1	8.4	8.1	8.3	8.6	8.9
		Hi PR	209	225	238	248	235	253	267	279	267	288	304	317	304	328	346	361	343	369	389	406	378	407	430	449
		Lo PR	105	112	122	130	111	118	129	137	115	123	134	143	121	129	141	150	127	135	147	157	131	140	152	162
	750	MBh	23.2	23.7	25.4	27.1	22.7	23.2	24.8	26.5	22.2	22.6	24.2	25.9	21.6	22.1	**23.6**	25.2	20.5	21.0	22.4	24.0	19.0	19.4	20.8	22.2
		S/T	0.90	0.84	0.68	0.51	0.93	0.87	0.71	0.53	0.95	0.89	0.73	0.54	0.98	0.92	**0.75**	0.56	1.00	0.96	0.78	0.58	1.00	0.96	0.78	0.59
		ΔT	26	24	21	17	26	25	22	17	26	25	22	17	26	25	**22**	17	25	25	21	17	23	23	20	16
		kW	1.58	1.61	1.65	1.70	1.69	1.72	1.77	1.83	1.79	1.82	1.88	1.93	1.87	1.91	**1.97**	2.03	1.94	1.98	2.04	2.11	2.01	2.05	2.11	2.18
		Amps	5.9	6.0	6.2	6.4	6.3	6.5	6.7	6.9	6.9	7.0	7.3	7.5	7.3	7.5	**7.7**	8.0	7.8	8.0	8.2	8.5	8.2	8.4	8.7	9.0
		Hi PR	213	229	242	253	239	257	272	283	272	293	309	322	310	333	**352**	367	348	375	396	413	385	414	438	456
		Lo PR	107	114	124	132	113	120	131	140	117	125	136	145	123	131	**143**	152	129	137	150	160	133	142	155	165
	900	MBh	24.1	24.6	26.3	28.1	23.5	24.0	25.6	27.4	22.9	23.4	25.0	26.8	22.4	22.9	24.4	26.1	21.3	21.7	23.2	24.8	19.7	20.1	21.5	23.0
		S/T	0.95	0.89	0.73	0.54	1.00	0.93	0.75	0.56	1.00	0.95	0.77	0.58	1.00	1.00	0.80	0.60	1.00	1.00	0.83	0.62	1.00	1.00	0.83	0.62
		ΔT	23	22	19	16	24	23	20	16	23	23	20	16	23	23	20	16	22	22	20	16	20	21	18	15
		kW	1.60	1.63	1.68	1.73	1.71	1.75	1.80	1.85	1.81	1.85	1.90	1.96	1.90	1.94	2.00	2.06	1.97	2.01	2.08	2.14	2.04	2.08	2.14	2.21
		Amps	6.0	6.1	6.3	6.5	6.4	6.6	6.8	7.1	7.0	7.2	7.4	7.7	7.5	7.6	7.9	8.2	7.9	8.1	8.4	8.7	8.4	8.6	8.9	9.2
		Hi PR	217	234	247	258	244	262	277	289	277	299	315	329	316	340	359	374	355	383	404	421	393	423	446	465
		Lo PR	109	116	126	135	115	122	134	142	120	127	139	148	126	134	146	155	132	140	153	163	136	145	158	168
85	700	MBh	23.3	23.7	24.9	26.5	22.7	23.2	24.3	25.9	22.2	22.6	23.7	25.3	21.7	22.1	23.1	24.7	20.6	21.0	22.0	23.4	19.1	19.4	20.4	21.7
		S/T	0.91	0.87	0.79	0.64	0.94	0.91	0.82	0.66	0.96	0.93	0.84	0.68	0.99	0.96	0.87	0.70	1.00	0.99	0.90	0.73	1.00	1.00	0.91	0.73
		ΔT	28	27	26	22	28	28	26	23	28	28	26	23	28	28	26	23	27	27	26	22	25	26	24	21
		kW	1.57	1.60	1.65	1.69	1.68	1.71	1.76	1.82	1.78	1.81	1.87	1.92	1.86	1.90	1.96	2.02	1.93	1.97	2.03	2.10	2.00	2.04	2.10	2.17
		Amps	5.8	6.0	6.2	6.4	6.3	6.4	6.6	6.9	6.8	7.0	7.2	7.5	7.3	7.5	7.7	8.0	7.7	7.9	8.2	8.5	8.2	8.4	8.7	9.0
		Hi PR	212	228	240	251	237	255	270	281	270	291	307	320	308	331	349	365	346	372	393	410	382	411	434	453
		Lo PR	106	113	123	131	112	119	130	139	116	124	135	144	122	130	142	151	128	136	149	158	133	141	154	164
	750	MBh	23.6	24.1	25.2	26.9	23.1	23.5	24.7	26.3	22.5	23.0	24.1	25.7	22.0	22.4	23.5	25.1	20.9	21.3	22.3	23.8	19.4	19.7	20.7	22.0
		S/T	0.94	0.91	0.82	0.66	0.97	0.94	0.85	0.69	1.00	0.96	0.87	0.71	1.00	0.99	0.90	0.73	1.00	1.00	0.93	0.76	1.00	1.00	0.94	0.76
		ΔT	27	27	25	22	28	27	26	22	28	27	26	22	27	27	26	22	26	26	25	22	24	24	24	21
		kW	1.59	1.62	1.67	1.72	1.70	1.73	1.79	1.84	1.80	1.83	1.89	1.95	1.89	1.92	1.98	2.04	1.96	2.00	2.06	2.12	2.02	2.06	2.13	2.20
		Amps	5.9	6.1	6.3	6.5	6.4	6.5	6.7	7.0	6.9	7.1	7.3	7.6	7.4	7.6	7.8	8.1	7.9	8.0	8.3	8.6	8.3	8.5	8.8	9.1
		Hi PR	215	232	245	255	242	260	274	286	275	296	312	326	313	337	356	371	352	379	400	417	389	418	442	461
		Lo PR	108	115	125	133	114	121	132	141	118	126	137	146	124	132	144	154	130	139	151	161	135	143	157	167
	900	MBh	24.5	24.9	26.1	27.9	23.9	24.4	25.5	27.2	23.3	23.8	24.9	26.6	22.8	23.2	24.3	25.9	21.6	22.0	23.1	24.6	20.0	20.4	21.4	22.8
		S/T	1.00	0.96	0.87	0.71	1.00	1.00	0.90	0.73	1.00	1.00	0.92	0.75	1.00	1.00	0.95	0.77	1.00	1.00	0.99	0.80	1.00	1.00	1.00	0.81
		ΔT	25	25	23	20	24	25	23	20	24	24	24	20	23	24	24	20	22	23	23	20	20	21	22	19
		kW	1.61	1.64	1.69	1.74	1.73	1.76	1.81	1.87	1.83	1.86	1.92	1.98	1.91	1.95	2.01	2.08	1.99	2.03	2.09	2.16	2.05	2.10	2.16	2.23
		Amps	6.0	6.2	6.4	6.6	6.5	6.7	6.9	7.1	7.1	7.2	7.5	7.7	7.5	7.7	8.0	8.3	8.0	8.2	8.5	8.8	8.5	8.7	9.0	9.3
		Hi PR	220	236	249	260	246	265	280	292	280	302	318	332	319	343	363	378	359	386	408	426	397	427	451	470
		Lo PR	110	117	128	136	116	124	135	144	121	128	140	149	127	135	147	157	133	141	154	164	137	146	160	170

IDB: Entering Indoor Dry Bulb Temperature

Shaded area reflects AHRI conditions

Amps = outdoor unit amps (comp.+fan)

High and low pressures are measured at the liquid and suction service valves.

kW = Total system power

Expanded Cooling Data — GSX16S241**/CA*F3636*6D*

			Outdoor Ambient Temperature																							
			65ºF				75ºF				85ºF				95ºF				105ºF				115ºF			
			Entering Indoor Wet Bulb Temperature																							
IDB	Airflow		59	63	67	71	59	63	67	71	59	63	67	71	59	63	67	71	59	63	67	71	59	63	67	71
70	0	MBh	21.8	22.6	24.7	-	21.3	22.0	24.2	-	20.8	21.5	23.6	-	20.3	21.0	23.0	-	19.2	19.9	21.9	-	17.8	18.5	20.2	-
		S/T	0.68	0.57	0.39	-	0.70	0.59	0.41	-	0.72	0.60	0.42	-	0.74	0.62	0.43	-	0.77	0.64	0.45	-	0.78	0.65	0.45	-
		ΔT	19.4	16.8	12.7	-	19.6	17.0	12.9	-	19.6	17.0	12.9	-	19.7	17.1	13.0	-	19.5	16.9	12.8	-	18.2	15.7	11.9	-
		kW	1.24	1.27	1.31	-	1.34	1.37	1.42	-	1.43	1.46	1.52	-	1.51	1.55	1.60	-	1.58	1.62	1.67	-	1.64	1.68	1.73	-
		Amps	5.2	5.3	5.5	-	5.6	5.8	5.9	-	6.1	6.2	6.4	-	6.5	6.6	6.9	-	6.9	7.1	7.3	-	7.3	7.5	7.7	-
		Hi PR	200	216	228	-	225	242	255	-	256	275	291	-	291	313	331	-	328	353	372	-	362	389	411	-
		Lo PR	104	111	121	-	110	117	128	-	114	121	133	-	120	128	139	-	126	134	146	-	130	138	151	-
	0	MBh	22.5	23.3	25.5	-	21.9	22.7	24.9	-	21.4	22.2	24.3	-	20.9	21.6	**23.7**	-	19.8	20.6	22.5	-	18.4	19.1	20.9	-
		S/T	0.69	0.58	0.40	-	0.72	0.60	0.41	-	0.73	0.61	0.42	-	0.76	0.63	**0.44**	-	0.79	0.66	0.46	-	0.79	0.66	0.46	-
		ΔT	19.0	16.5	12.5	-	19.2	16.7	12.6	-	19.3	16.7	12.7	-	19.4	16.8	**12.7**	-	19.1	16.6	12.6	-	17.9	15.5	11.7	-
		kW	1.26	1.29	1.33	-	1.36	1.39	1.44	-	1.45	1.49	1.54	-	1.53	1.57	**1.62**	-	1.60	1.64	1.70	-	1.66	1.70	1.76	-
		Amps	5.3	5.4	5.6	-	5.7	5.8	6.0	-	6.2	6.3	6.5	-	6.6	6.7	**7.0**	-	7.0	7.2	7.4	-	7.4	7.6	7.8	-
		Hi PR	204	219	232	-	229	246	260	-	260	280	296	-	296	319	**337**	-	333	359	379	-	368	396	418	-
		Lo PR	106	113	123	-	112	119	130	-	116	124	135	-	122	130	**142**	-	128	136	149	-	132	141	154	-
	0	MBh	23.2	24.1	26.4	-	22.7	23.5	25.8	-	22.2	23.0	25.2	-	21.6	22.4	24.5	-	20.5	21.3	23.3	-	19.0	19.7	21.6	-
		S/T	0.73	0.61	0.42	-	0.76	0.64	0.44	-	0.78	0.65	0.45	-	0.81	0.67	0.47	-	0.84	0.70	0.48	-	0.84	0.70	0.49	-
		ΔT	17.4	15.1	11.5	-	17.6	15.3	11.6	-	17.7	15.3	11.6	-	17.8	15.4	11.7	-	17.5	15.2	11.5	-	16.4	14.2	10.8	-
		kW	1.28	1.31	1.35	-	1.38	1.42	1.47	-	1.48	1.51	1.57	-	1.56	1.60	1.65	-	1.63	1.67	1.73	-	1.69	1.73	1.79	-
		Amps	5.4	5.5	5.7	-	5.8	5.9	6.1	-	6.3	6.4	6.6	-	6.7	6.9	7.1	-	7.1	7.3	7.5	-	7.5	7.7	8.0	-
		Hi PR	208	224	236	-	233	251	265	-	265	285	301	-	302	325	343	-	340	366	386	-	376	404	427	-
		Lo PR	108	115	125	-	114	121	132	-	118	126	138	-	124	132	145	-	130	139	151	-	135	144	157	-
75	0	MBh	22.1	22.8	24.7	26.5	21.6	22.3	24.1	25.9	21.1	21.7	23.5	25.3	20.6	21.2	23.0	24.6	19.6	20.2	21.8	23.4	18.1	18.7	20.2	21.7
		S/T	0.77	0.69	0.52	0.33	0.80	0.71	0.54	0.35	0.82	0.73	0.55	0.36	0.84	0.75	0.57	0.37	0.88	0.78	0.59	0.38	0.88	0.79	0.60	0.38
		ΔT	22.4	20.6	16.9	11.7	22.6	20.9	17.1	11.8	22.7	20.9	17.1	11.8	22.8	21.0	17.2	11.9	22.5	20.7	17.0	11.7	21.0	19.4	15.9	11.0
		kW	1.25	1.28	1.32	1.37	1.35	1.38	1.43	1.48	1.44	1.48	1.53	1.58	1.52	1.56	1.61	1.67	1.59	1.63	1.69	1.75	1.65	1.69	1.75	1.81
		Amps	5.3	5.4	5.6	5.8	5.7	5.8	6.0	6.2	6.1	6.3	6.5	6.7	6.6	6.7	6.9	7.2	7.0	7.1	7.4	7.6	7.4	7.5	7.8	8.1
		Hi PR	202	218	230	240	227	244	258	269	258	278	293	306	294	317	334	349	331	356	376	392	366	393	415	433
		Lo PR	105	112	122	130	111	118	129	137	115	123	134	143	121	129	141	150	127	135	147	157	131	140	153	162
	0	MBh	22.8	23.5	25.4	27.3	22.3	23.0	24.9	26.7	21.8	22.4	24.3	26.0	21.2	21.9	23.7	25.4	20.2	20.8	22.5	24.1	18.7	19.2	20.8	22.4
		S/T	0.79	0.70	0.53	0.34	0.81	0.73	0.55	0.35	0.83	0.75	0.56	0.36	0.86	0.77	0.58	0.38	0.89	0.80	0.61	0.39	0.90	0.81	0.61	0.39
		ΔT	22.0	20.2	16.6	11.4	22.2	20.5	16.8	11.6	22.3	20.5	16.8	11.6	22.4	20.7	16.9	11.7	22.1	20.4	16.7	11.5	20.7	19.0	15.6	10.8
		kW	1.27	1.30	1.34	1.39	1.37	1.40	1.45	1.50	1.47	1.50	1.55	1.61	1.55	1.58	1.64	1.70	1.62	1.66	1.71	1.77	1.68	1.72	1.78	1.84
		Amps	5.3	5.5	5.6	5.8	5.8	5.9	6.1	6.3	6.2	6.4	6.6	6.8	6.7	6.8	7.0	7.3	7.1	7.2	7.5	7.7	7.5	7.7	7.9	8.2
		Hi PR	206	222	234	244	231	249	263	274	263	283	299	311	299	322	340	355	337	362	383	399	372	400	423	441
		Lo PR	107	114	124	132	113	120	131	140	117	125	136	145	123	131	143	152	129	137	150	160	134	142	155	165
	0	MBh	23.6	24.3	26.3	28.3	23.1	23.8	25.7	27.6	22.5	23.2	25.1	27.0	22.0	22.6	24.5	26.3	20.9	21.5	23.3	25.0	19.3	19.9	21.6	23.1
		S/T	0.83	0.75	0.56	0.36	0.86	0.77	0.59	0.38	0.89	0.79	0.60	0.39	0.92	0.82	0.62	0.40	0.95	0.85	0.64	0.41	0.96	0.86	0.65	0.42
		ΔT	20.1	18.6	15.2	10.5	20.4	18.8	15.4	10.6	20.4	18.8	15.4	10.6	20.6	18.9	15.5	10.7	20.3	18.7	15.3	10.6	18.9	17.4	14.3	9.9
		kW	1.29	1.32	1.36	1.41	1.40	1.43	1.48	1.53	1.49	1.53	1.58	1.64	1.58	1.61	1.67	1.73	1.65	1.68	1.74	1.81	1.71	1.75	1.81	1.87
		Amps	5.4	5.6	5.7	5.9	5.9	6.0	6.2	6.4	6.4	6.5	6.7	7.0	6.8	6.9	7.2	7.4	7.2	7.4	7.6	7.9	7.6	7.8	8.0	8.3
		Hi PR	210	226	239	249	236	254	268	279	268	288	305	318	305	328	347	362	343	370	390	407	379	408	431	450
		Lo PR	109	116	127	135	115	123	134	142	120	127	139	148	126	134	146	156	132	140	153	163	136	145	158	169

IDB: Entering Indoor Dry Bulb Temperature
High and low pressures are measured at the liquid and suction service valves.

Shaded area reflects ACCA (TVA) conditions

MBH = Net Total Capacity (1000 Btu/hr)
S/T = Sensible To Total Capacity Ratio

HI PR = Pressure at liquid service valve, psig
LO PR = Pressure at vapor service valve, psig

Amps = outdoor unit amps (comp.+fan)
kW = Total system power

Expanded Cooling Data — GSX16S241**/CA*F3636*6D* (cont.)

			Outdoor Ambient Temperature																							
			65ºF				75ºF				85ºF				95ºF				105ºF				115ºF			
			Entering Indoor Wet Bulb Temperature																							
IDB	Airflow		59	63	67	71	59	63	67	71	59	63	67	71	59	63	67	71	59	63	67	71	59	63	67	71
80	0	MBh	22.5	23.0	24.6	26.3	22.0	22.5	24.0	25.7	21.5	22.0	23.5	25.1	21.0	21.4	22.9	24.5	19.9	20.4	21.7	23.2	18.5	18.9	20.1	21.5
		S/T	0.84	0.79	0.64	0.48	0.87	0.82	0.67	0.50	0.90	0.84	0.68	0.51	0.93	0.87	0.71	0.53	0.96	0.90	0.73	0.55	0.97	0.91	0.74	0.55
		ΔT	25.0	23.9	20.8	16.6	25.3	24.2	21.1	16.8	25.3	24.2	21.1	16.8	25.5	24.4	21.2	17.0	25.1	24.1	20.9	16.7	23.5	22.5	19.6	15.6
		kW	1.26	1.29	1.33	1.38	1.36	1.40	1.44	1.49	1.46	1.49	1.54	1.60	1.54	1.57	1.63	1.69	1.61	1.65	1.70	1.76	1.67	1.71	1.77	1.83
		Amps	5.3	5.4	5.6	5.8	5.7	5.9	6.0	6.3	6.2	6.3	6.5	6.8	6.6	6.8	7.0	7.2	7.0	7.2	7.4	7.7	7.4	7.6	7.9	8.1
		Hi PR	204	220	232	242	229	247	261	272	261	281	296	309	297	320	338	352	334	360	380	396	369	397	420	438
		Lo PR	106	113	123	131	112	119	130	139	117	124	135	144	122	130	142	151	128	136	149	159	133	141	154	164
	0	MBh	23.2	23.7	25.4	27.1	22.7	23.2	24.8	26.5	22.2	22.6	24.2	25.9	21.6	22.1	**23.6**	25.2	20.5	21.0	22.4	24.0	19.0	19.4	20.8	22.2
		S/T	0.86	0.81	0.66	0.49	0.89	0.84	0.68	0.51	0.92	0.86	0.70	0.52	0.94	0.89	**0.72**	0.54	0.98	0.92	0.75	0.56	0.99	0.93	0.75	0.56
		ΔT	24.5	23.5	20.4	16.3	24.8	23.8	20.7	16.5	24.9	23.8	20.7	16.6	25.0	24.0	**20.9**	16.7	24.7	23.7	20.6	16.4	23.1	22.1	19.2	15.4
		kW	1.28	1.31	1.35	1.40	1.39	1.42	1.47	1.52	1.48	1.51	1.57	1.62	1.56	1.60	**1.65**	1.71	1.63	1.67	1.73	1.79	1.69	1.73	1.79	1.86
		Amps	5.4	5.5	5.7	5.9	5.8	5.9	6.1	6.4	6.3	6.4	6.7	6.9	6.7	6.9	**7.1**	7.4	7.1	7.3	7.5	7.8	7.5	7.7	8.0	8.3
		Hi PR	208	224	236	246	233	251	265	277	265	286	302	315	302	325	**343**	358	340	366	386	403	376	404	427	445
		Lo PR	108	115	125	134	114	121	132	141	119	126	138	147	125	132	**145**	154	130	139	152	161	135	144	157	167
	0	MBh	24.1	24.6	26.3	28.1	23.5	24.0	25.6	27.4	22.9	23.4	25.0	26.8	22.4	22.9	24.4	26.1	21.3	21.7	23.2	24.8	19.7	20.1	21.5	23.0
		S/T	0.92	0.86	0.70	0.52	0.95	0.89	0.72	0.54	1.00	0.91	0.74	0.55	1.00	0.94	0.77	0.57	1.00	1.00	0.80	0.59	1.00	1.00	0.80	0.60
		ΔT	22.5	21.6	18.7	15.0	22.8	21.8	19.0	15.2	23.4	21.8	19.0	15.2	22.9	22.0	19.1	15.3	21.7	22.2	18.9	15.1	20.1	20.6	17.6	14.1
		kW	1.30	1.33	1.38	1.42	1.41	1.44	1.49	1.54	1.50	1.54	1.59	1.65	1.59	1.63	1.68	1.74	1.66	1.70	1.76	1.82	1.72	1.76	1.83	1.89
		Amps	5.5	5.6	5.8	6.0	5.9	6.1	6.2	6.5	6.4	6.6	6.8	7.0	6.8	7.0	7.2	7.5	7.3	7.4	7.7	8.0	7.7	7.9	8.1	8.4
		Hi PR	212	228	241	251	238	256	270	282	271	291	308	321	308	332	350	365	347	373	394	411	383	412	435	454
		Lo PR	110	117	128	136	116	124	135	144	121	129	140	150	127	135	148	157	133	142	155	165	138	146	160	170
85	0	MBh	22.9	23.4	24.5	26.1	22.4	22.8	23.9	25.5	21.9	22.3	23.3	24.9	21.3	21.7	22.8	24.3	20.3	20.7	21.6	23.1	18.8	19.1	20.0	21.4
		S/T	0.88	0.85	0.77	0.62	0.92	0.88	0.80	0.65	0.94	0.91	0.82	0.66	0.97	0.94	0.84	0.69	1.00	0.97	0.88	0.71	1.00	0.98	0.88	0.72
		ΔT	26.6	26.2	24.8	21.4	27.0	26.5	25.1	21.7	27.0	26.5	25.1	21.7	27.2	26.7	25.3	21.9	26.6	26.4	24.9	21.6	24.7	24.6	23.3	20.1
		kW	1.27	1.30	1.34	1.39	1.38	1.41	1.46	1.51	1.47	1.50	1.56	1.61	1.55	1.59	1.64	1.70	1.62	1.66	1.72	1.78	1.68	1.72	1.78	1.85
		Amps	5.4	5.5	5.7	5.9	5.8	5.9	6.1	6.3	6.3	6.4	6.6	6.8	6.7	6.8	7.0	7.3	7.1	7.3	7.5	7.8	7.5	7.7	7.9	8.2
		Hi PR	206	222	235	245	232	249	263	275	263	284	299	312	300	323	341	356	338	363	384	400	373	401	424	442
		Lo PR	107	114	124	133	113	120	132	140	118	125	137	146	124	132	144	153	130	138	150	160	134	143	156	166
	0	MBh	23.6	24.1	25.2	26.9	23.1	23.5	24.7	26.3	22.5	23.0	24.1	25.7	22.0	22.4	23.5	25.1	20.9	21.3	22.3	23.8	19.4	19.7	20.7	22.0
		S/T	0.90	0.87	0.79	0.64	0.94	0.90	0.81	0.66	0.96	0.93	0.84	0.68	0.99	0.96	0.86	0.70	1.00	0.99	0.90	0.73	1.00	1.00	0.90	0.73
		ΔT	26.2	25.7	24.3	21.1	26.5	26.1	24.6	21.3	26.5	26.1	24.7	21.3	26.7	26.3	24.8	21.5	25.6	25.9	24.5	21.2	23.7	24.2	22.9	19.8
		kW	1.29	1.32	1.36	1.41	1.40	1.43	1.48	1.53	1.49	1.53	1.58	1.64	1.58	1.61	1.67	1.73	1.65	1.69	1.74	1.81	1.71	1.75	1.81	1.87
		Amps	5.4	5.6	5.7	5.9	5.9	6.0	6.2	6.4	6.4	6.5	6.7	7.0	6.8	6.9	7.2	7.4	7.2	7.4	7.6	7.9	7.6	7.8	8.0	8.3
		Hi PR	210	226	239	249	236	254	268	279	268	288	305	318	305	329	347	362	343	370	390	407	379	408	431	450
		Lo PR	109	116	127	135	115	123	134	142	120	127	139	148	126	134	146	156	132	140	153	163	136	145	158	169
	0	MBh	24.5	24.9	26.1	27.9	23.9	24.4	25.5	27.2	23.3	23.8	24.9	26.6	22.8	23.2	24.3	25.9	21.6	22.0	23.1	24.6	20.0	20.4	21.4	22.8
		S/T	0.96	0.93	0.84	0.68	0.99	0.96	0.87	0.70	1.00	0.98	0.89	0.72	1.00	1.00	0.92	0.74	1.00	1.00	0.95	0.77	1.00	1.00	0.96	0.78
		ΔT	24.0	23.6	22.3	19.3	24.3	23.9	22.6	19.5	23.8	23.9	22.6	19.6	23.3	23.7	22.8	19.7	22.1	22.5	22.4	19.4	20.5	20.9	21.0	18.1
		kW	1.31	1.34	1.39	1.44	1.42	1.45	1.50	1.56	1.52	1.55	1.61	1.66	1.60	1.64	1.70	1.76	1.68	1.72	1.78	1.84	1.74	1.78	1.84	1.91
		Amps	5.5	5.7	5.8	6.0	6.0	6.1	6.3	6.5	6.5	6.6	6.8	7.1	6.9	7.1	7.3	7.6	7.3	7.5	7.7	8.0	7.7	7.9	8.2	8.5
		Hi PR	214	231	243	254	240	259	273	285	273	294	311	324	311	335	354	369	350	377	398	415	387	417	440	459
		Lo PR	111	118	129	138	117	125	136	145	122	130	142	151	128	136	149	159	134	143	156	166	139	148	161	172

IDB: Entering Indoor Dry Bulb Temperature
High and low pressures are measured at the liquid and suction service valves.

Shaded area reflects AHRI conditions

MBH = Net Total Capacity (1000 Btu/hr)
S/T = Sensible To Total Capacity Ratio

HI PR = Pressure at liquid service valve, psig
LO PR = Pressure at vapor service valve, psig

Amps = outdoor unit amps (comp.+fan)
kW = Total system power

Expanded Cooling Data — GSX16[0/S]301**/CA*F3743*6D*+TXV

			Outdoor Ambient Temperature																							
			65ºF				75ºF				85ºF				95ºF				105ºF				115ºF			
			Entering Indoor Wet Bulb Temperature																							
IDB	Airflow		59	63	67	71	59	63	67	71	59	63	67	71	59	63	67	71	59	63	67	71	59	63	67	71
70	875	MBh	25.5	26.4	28.9	-	24.9	25.8	28.2	-	24.3	25.2	27.6	-	23.7	24.6	26.9	-	22.5	23.3	25.6	-	20.8	21.6	23.7	-
		S/T	0.70	0.59	0.41	-	0.73	0.61	0.42	-	0.75	0.62	0.43	-	0.77	0.64	0.45	-	0.80	0.67	0.46	-	0.81	0.67	0.47	-
		ΔT	19	16	12	-	19	16	12	-	19	16	13	-	19	17	13	-	19	16	12	-	18	15	12	-
		kW	1.87	1.90	1.96	-	2.00	2.04	2.10	-	2.11	2.15	2.22	-	2.21	2.26	2.32	-	2.30	2.34	2.41	-	2.37	2.42	2.49	-
		Amps	6.8	6.9	7.1	-	7.3	7.5	7.7	-	7.9	8.1	8.4	-	8.5	8.7	9.0	-	9.0	9.2	9.5	-	9.5	9.8	10.1	-
		Hi PR	214	230	243	-	240	258	272	-	272	293	310	-	310	334	353	-	349	376	397	-	386	415	438	-
		Lo PR	104	110	120	-	109	116	127	-	114	121	132	-	119	127	139	-	125	133	145	-	130	138	150	-
	1000	MBh	27.6	28.6	31.3	-	26.9	27.9	30.6	-	26.3	27.3	29.9	-	25.7	26.6	29.1	-	24.4	25.3	27.7	-	22.6	23.4	25.6	-
		S/T	0.73	0.61	0.42	-	0.75	0.63	0.44	-	0.77	0.65	0.45	-	0.80	0.67	0.46	-	0.83	0.69	0.48	-	0.84	0.70	0.48	-
		ΔT	18	16	12	-	19	16	12	-	19	16	12	-	19	16	12	-	19	16	12	-	17	15	11	-
		kW	1.91	1.95	2.00	-	2.04	2.08	2.14	-	2.16	2.20	2.27	-	2.26	2.31	2.38	-	2.35	2.40	2.47	-	2.43	2.48	2.55	-
		Amps	6.9	7.1	7.3	-	7.5	7.7	7.9	-	8.2	8.3	8.6	-	8.7	8.9	9.2	-	9.3	9.5	9.8	-	9.8	10.1	10.4	-
		Hi PR	220	237	250	-	247	266	281	-	281	302	319	-	320	344	364	-	360	387	409	-	398	428	452	-
		Lo PR	107	114	124	-	113	120	131	-	117	125	136	-	123	131	143	-	129	137	150	-	134	142	155	-
	1125	MBh	28.4	29.5	32.3	-	27.8	28.8	31.5	-	27.1	28.1	30.8	-	26.4	27.4	30.0	-	25.1	26.0	28.5	-	23.3	24.1	26.4	-
		S/T	0.76	0.64	0.44	-	0.79	0.66	0.46	-	0.81	0.68	0.47	-	0.84	0.70	0.48	-	0.87	0.73	0.50	-	0.88	0.73	0.51	-
		ΔT	18	15	12	-	18	16	12	-	18	16	12	-	18	16	12	-	18	15	12	-	17	14	11	-
		kW	1.92	1.96	2.02	-	2.06	2.10	2.16	-	2.18	2.22	2.29	-	2.28	2.33	2.40	-	2.37	2.42	2.49	-	2.45	2.50	2.57	-
		Amps	7.0	7.2	7.4	-	7.6	7.8	8.0	-	8.2	8.4	8.7	-	8.8	9.0	9.3	-	9.4	9.6	9.9	-	9.9	10.1	10.5	-
		Hi PR	222	239	253	-	249	268	283	-	284	305	322	-	323	348	367	-	364	391	413	-	402	432	456	-
		Lo PR	108	115	125	-	114	121	132	-	118	126	138	-	124	132	145	-	130	139	151	-	135	143	157	-
75	875	MBh	25.9	26.7	28.9	31.0	25.3	26.0	28.2	30.3	24.7	25.4	27.5	29.5	24.1	**24.8**	26.8	28.8	22.9	23.6	25.5	27.4	21.2	21.8	23.6	25.4
		S/T	0.80	0.71	0.54	0.35	0.83	0.74	0.56	0.36	0.85	0.76	0.57	0.37	0.88	**0.78**	0.59	0.38	0.91	0.81	0.62	0.40	0.92	0.82	0.62	0.40
		ΔT	22	20	16	11	22	20	17	11	22	20	17	11	22	**20**	17	12	22	20	16	11	20	19	15	11
		kW	1.88	1.92	1.97	2.03	2.01	2.05	2.11	2.17	2.13	2.17	2.23	2.30	2.23	**2.27**	2.34	2.41	2.31	2.36	2.43	2.51	2.39	2.44	2.51	2.59
		Amps	6.8	7.0	7.2	7.5	7.4	7.5	7.8	8.1	8.0	8.2	8.5	8.8	8.5	**8.8**	9.0	9.4	9.1	9.3	9.6	10.0	9.6	9.9	10.2	10.6
		Hi PR	216	232	245	256	242	260	275	287	275	296	313	326	314	**337**	356	372	353	380	401	418	390	419	443	462
		Lo PR	105	111	122	129	111	118	128	137	115	122	133	142	121	**128**	140	149	127	135	147	156	131	139	152	162
	1000	MBh	28.1	28.9	31.3	33.6	27.4	28.2	30.5	32.8	26.8	27.5	29.8	32.0	26.1	**26.9**	29.1	31.2	24.8	25.5	27.6	29.7	23.0	23.6	25.6	27.5
		S/T	0.83	0.74	0.56	0.36	0.86	0.77	0.58	0.37	0.88	0.79	0.60	0.38	0.91	**0.81**	0.61	0.40	0.94	0.84	0.64	0.41	0.95	0.85	0.64	0.41
		ΔT	21	20	16	11	22	20	16	11	22	20	16	11	22	**20**	16	11	21	20	16	11	20	18	15	10
		kW	1.92	1.96	2.02	2.08	2.06	2.10	2.16	2.22	2.18	2.22	2.29	2.36	2.28	**2.33**	2.40	2.47	2.37	2.42	2.49	2.57	2.45	2.50	2.57	2.66
		Amps	7.0	7.2	7.4	7.7	7.6	7.8	8.0	8.3	8.2	8.4	8.7	9.0	8.8	**9.0**	9.3	9.7	9.4	9.6	9.9	10.3	9.9	10.2	10.5	10.9
		Hi PR	222	239	253	264	250	269	284	296	284	305	322	336	323	**348**	367	383	364	391	413	431	402	432	457	476
		Lo PR	108	115	125	133	114	121	132	141	118	126	138	147	124	**132**	145	154	130	139	151	161	135	144	157	167
	1125	MBh	28.9	29.8	32.2	34.6	28.2	29.1	31.5	33.8	27.6	28.4	30.7	33.0	26.9	**27.7**	30.0	32.2	25.5	26.3	28.5	30.5	23.7	24.4	26.4	28.3
		S/T	0.87	0.78	0.59	0.38	0.90	0.80	0.61	0.39	0.92	0.82	0.62	0.40	0.95	**0.85**	0.64	0.41	0.99	0.88	0.67	0.43	1.00	0.89	0.67	0.43
		ΔT	20	19	15	11	21	19	16	11	21	19	16	11	21	**19**	16	11	21	19	16	11	19	18	15	10
		kW	1.94	1.97	2.03	2.09	2.07	2.11	2.18	2.24	2.19	2.24	2.30	2.37	2.30	**2.35**	2.42	2.49	2.39	2.44	2.51	2.59	2.47	2.52	2.60	2.68
		Amps	7.1	7.2	7.5	7.8	7.6	7.8	8.1	8.4	8.3	8.5	8.8	9.1	8.9	**9.1**	9.4	9.7	9.4	9.7	10.0	10.4	10.0	10.2	10.6	11.0
		Hi PR	225	242	255	266	252	271	286	299	287	308	326	340	326	**351**	371	387	367	395	417	435	406	437	461	481
		Lo PR	109	116	127	135	115	122	134	142	120	127	139	148	126	**134**	146	155	132	140	153	163	136	145	158	169

IDB: Entering Indoor Dry Bulb Temperature

Shaded area reflects ACCA (TVA) conditions

Amps = outdoor unit amps (comp.+fan)

High and low pressures are measured at the liquid and suction service valves.

kW = Total system power

Expanded Cooling Data — GSX16[0/S]301**/CA*F3743*6D*+TXV (cont.)

			Outdoor Ambient Temperature																							
			65ºF				75ºF				85ºF				95ºF				105ºF				115ºF			
			Entering Indoor Wet Bulb Temperature																							
IDB	Airflow		59	63	67	71	59	63	67	71	59	63	67	71	59	63	67	71	59	63	67	71	59	63	67	71
80	875	MBh	26.4	26.9	28.8	30.8	25.7	26.3	28.1	30.0	25.1	25.7	27.4	29.3	24.5	25.1	26.8	28.6	23.3	23.8	25.4	27.2	21.6	22.0	23.6	25.2
		S/T	0.88	0.82	0.67	0.50	0.91	0.85	0.69	0.52	0.93	0.87	0.71	0.53	0.96	0.90	0.73	0.55	1.00	0.93	0.76	0.57	1.00	0.94	0.77	0.57
		ΔT	24	23	20	16	25	24	20	16	25	24	20	16	25	24	21	16	24	23	20	16	23	22	19	15
		kW	1.90	1.93	1.99	2.04	2.03	2.07	2.13	2.19	2.14	2.19	2.25	2.32	2.25	2.29	2.36	2.43	2.33	2.38	2.45	2.53	2.41	2.46	2.53	2.61
		Amps	6.9	7.0	7.3	7.5	7.4	7.6	7.9	8.2	8.1	8.3	8.5	8.9	8.6	8.8	9.1	9.5	9.2	9.4	9.7	10.1	9.7	10.0	10.3	10.7
		Hi PR	218	234	248	258	244	263	278	290	278	299	316	330	317	341	360	375	356	383	405	422	394	424	447	467
		Lo PR	106	112	123	131	112	119	130	138	116	123	135	144	122	130	142	151	128	136	148	158	132	141	154	163
	1000	MBh	28.6	29.2	31.2	33.3	27.9	28.5	30.5	32.6	27.2	27.8	29.7	31.8	26.6	27.1	**29.0**	31.0	25.2	25.8	27.6	29.5	23.4	23.9	25.5	27.3
		S/T	0.91	0.85	0.69	0.52	0.94	0.88	0.72	0.54	0.96	0.90	0.74	0.55	1.00	0.93	**0.76**	0.57	1.00	0.97	0.79	0.59	1.00	0.98	0.80	0.59
		ΔT	24	23	20	16	24	23	20	16	24	23	20	16	24	23	**20**	16	23	23	20	16	21	21	19	15
		kW	1.94	1.97	2.03	2.09	2.07	2.11	2.18	2.24	2.19	2.24	2.30	2.37	2.30	2.35	**2.42**	2.49	2.39	2.44	2.51	2.59	2.47	2.52	2.60	2.68
		Amps	7.1	7.2	7.5	7.8	7.6	7.8	8.1	8.4	8.3	8.5	8.8	9.1	8.9	9.1	**9.4**	9.7	9.4	9.7	10.0	10.4	10.0	10.2	10.6	11.0
		Hi PR	225	242	255	266	252	271	286	299	287	308	326	340	326	351	**371**	387	367	395	417	435	406	437	461	481
		Lo PR	109	116	127	135	115	123	134	142	120	127	139	148	126	134	**146**	155	132	140	153	163	136	145	158	169
	1125	MBh	29.4	30.1	32.1	34.3	28.7	29.4	31.4	33.5	28.0	28.7	30.6	32.7	27.4	28.0	29.9	31.9	26.0	26.6	28.4	30.3	24.1	24.6	26.3	28.1
		S/T	0.95	0.89	0.73	0.54	1.00	0.93	0.75	0.56	1.00	0.95	0.77	0.58	1.00	1.00	0.80	0.60	1.00	1.00	0.83	0.62	1.00	1.00	0.83	0.62
		ΔT	23	22	19	15	23	22	19	15	23	22	19	15	22	23	19	16	21	22	19	15	20	20	18	14
		kW	1.95	1.99	2.05	2.11	2.09	2.13	2.19	2.26	2.21	2.25	2.32	2.39	2.32	2.36	2.44	2.51	2.41	2.46	2.53	2.61	2.48	2.54	2.62	2.70
		Amps	7.1	7.3	7.5	7.8	7.7	7.9	8.2	8.5	8.4	8.6	8.9	9.2	9.0	9.2	9.5	9.8	9.5	9.8	10.1	10.5	10.1	10.3	10.7	11.1
		Hi PR	227	244	258	269	255	274	289	302	290	312	329	343	330	355	375	391	371	399	422	440	410	441	466	486
		Lo PR	110	117	128	136	116	124	135	144	121	129	140	150	127	135	147	157	133	142	155	165	138	146	160	170
85	875	MBh	26.8	27.3	28.6	30.5	26.2	26.7	28.0	29.8	25.6	26.1	27.3	29.1	24.9	25.4	26.6	28.4	23.7	24.2	25.3	27.0	22.0	22.4	23.4	25.0
		S/T	0.92	0.89	0.80	0.65	0.95	0.92	0.83	0.67	0.98	0.94	0.85	0.69	1.00	0.97	0.88	0.71	1.00	1.00	0.91	0.74	1.00	1.00	0.92	0.74
		ΔT	26	25	24	21	26	26	24	21	26	26	24	21	26	26	25	21	25	25	24	21	23	24	23	20
		kW	1.91	1.95	2.00	2.06	2.04	2.08	2.14	2.21	2.16	2.20	2.27	2.34	2.26	2.31	2.38	2.45	2.35	2.40	2.47	2.55	2.43	2.48	2.55	2.63
		Amps	6.9	7.1	7.3	7.6	7.5	7.7	7.9	8.2	8.1	8.3	8.6	8.9	8.7	8.9	9.2	9.6	9.3	9.5	9.8	10.2	9.8	10.1	10.4	10.8
		Hi PR	220	237	250	261	247	266	281	293	281	302	319	333	320	344	363	379	360	387	409	426	398	428	452	471
		Lo PR	107	114	124	132	113	120	131	140	117	125	136	145	123	131	143	152	129	137	150	160	133	142	155	165
	1000	MBh	29.1	29.6	31.0	33.1	28.4	28.9	30.3	32.3	27.7	28.2	29.6	31.6	27.0	27.6	28.9	30.8	25.7	26.2	27.4	29.2	23.8	24.2	25.4	27.1
		S/T	0.95	0.92	0.83	0.67	0.99	0.95	0.86	0.70	1.00	0.98	0.88	0.71	1.00	1.00	0.91	0.74	1.00	1.00	0.94	0.77	1.00	1.00	0.95	0.77
		ΔT	25	25	24	20	26	25	24	21	25	25	24	21	25	25	24	21	24	24	24	21	22	22	22	19
		kW	1.95	1.99	2.05	2.11	2.09	2.13	2.19	2.26	2.21	2.25	2.32	2.39	2.32	2.36	2.44	2.51	2.41	2.46	2.53	2.61	2.48	2.54	2.62	2.70
		Amps	7.1	7.3	7.5	7.8	7.7	7.9	8.2	8.5	8.4	8.6	8.9	9.2	9.0	9.2	9.5	9.8	9.5	9.8	10.1	10.5	10.1	10.3	10.7	11.1
		Hi PR	227	244	258	269	255	274	289	302	290	312	329	343	330	355	375	391	371	399	422	440	410	441	466	486
		Lo PR	110	117	128	136	116	124	135	144	121	129	140	150	127	135	147	157	133	142	155	165	138	146	160	170
	1125	MBh	29.9	30.5	31.9	34.1	29.2	29.8	31.2	33.3	28.5	29.1	30.5	32.5	27.8	28.4	29.7	31.7	26.4	27.0	28.2	30.1	24.5	25.0	26.2	27.9
		S/T	1.00	0.96	0.87	0.70	1.00	1.00	0.90	0.73	1.00	1.00	0.92	0.75	1.00	1.00	0.95	0.77	1.00	1.00	0.99	0.80	1.00	1.00	1.00	0.81
		ΔT	24	24	23	20	24	24	23	20	23	24	23	20	23	23	23	20	22	22	23	20	20	20	21	18
		kW	1.97	2.00	2.06	2.12	2.10	2.15	2.21	2.28	2.23	2.27	2.34	2.41	2.33	2.38	2.45	2.53	2.43	2.48	2.55	2.63	2.50	2.56	2.64	2.72
		Amps	7.2	7.4	7.6	7.9	7.8	8.0	8.2	8.5	8.5	8.7	8.9	9.3	9.0	9.3	9.6	9.9	9.6	9.9	10.2	10.6	10.2	10.4	10.8	11.2
		Hi PR	229	247	260	272	257	277	292	305	292	315	332	347	333	358	378	395	375	403	426	444	414	445	470	491
		Lo PR	111	118	129	138	117	125	136	145	122	130	142	151	128	136	149	159	134	143	156	166	139	148	161	172

IDB: Entering Indoor Dry Bulb Temperature

Shaded area reflects AHRI conditions

Amps = outdoor unit amps (comp.+fan)

High and low pressures are measured at the liquid and suction service valves.

kW = Total system power

Expanded Cooling Data — GSX16[0311/A301]/**CA*F3743*6D*+TXV

			Outdoor Ambient Temperature																							
			65ºF				75ºF				85ºF				95ºF				105ºF				115ºF			
			Entering Indoor Wet Bulb Temperature																							
IDB	Airflow		59	63	67	71	59	63	67	71	59	63	67	71	59	63	67	71	59	63	67	71	59	63	67	71
70	875	MBh	29.1	29.5	30.4	---	28.8	29.2	30.1	---	28.1	28.5	29.4	---	26.8	27.2	28.0	---	25.2	25.6	26.5	---	23.7	24.1	25.0	---
		S/T	0.62	0.54	0.40	---	0.63	0.55	0.41	---	0.65	0.57	0.44	---	0.67	0.59	0.46	---	1.00	0.62	0.48	---	1.00	0.67	0.53	---
		ΔT	20	18	15	---	20	18	15	---	20	18	15	---	20	18	15	---	20	18	14	---	21	19	15	---
		kW	1.67	1.67	1.67	---	1.86	1.86	1.86	---	2.07	2.07	2.07	---	2.30	2.30	2.30	---	2.55	2.55	2.55	---	2.85	2.85	2.85	---
		Amps	6.0	6.0	6.0	---	6.9	6.8	6.8	---	7.8	7.8	7.8	---	8.9	8.8	8.8	---	10.0	10.0	10.0	---	11.4	11.4	11.4	---
		Hi PR	241	242	244	---	280	281	282	---	319	321	322	---	362	363	365	---	409	410	412	---	458	459	461	---
		Lo PR	123	125	128	---	130	132	135	---	137	139	142	---	143	144	147	---	148	150	153	---	155	156	159	---
	1000	MBh	29.5	29.9	30.8	---	29.2	29.6	30.5	---	28.5	28.9	29.7	---	27.2	27.6	28.4	---	25.6	26.0	26.8	---	24.1	24.5	25.4	---
		S/T	0.68	0.60	0.47	---	0.69	0.61	0.47	---	0.71	0.64	0.50	---	1.00	0.66	0.52	---	1.00	0.68	0.54	---	1.00	0.73	0.59	---
		ΔT	19	17	13	---	19	17	13	---	19	17	14	---	19	17	13	---	18	17	13	---	20	18	14	---
		kW	1.68	1.68	1.68	---	1.87	1.87	1.87	---	2.08	2.08	2.08	---	2.31	2.31	2.31	---	2.56	2.56	2.56	---	2.86	2.86	2.86	---
		Amps	6.0	6.0	6.0	---	6.9	6.9	6.9	---	7.9	7.9	7.8	---	8.9	8.9	8.9	---	10.1	10.1	10.0	---	11.4	11.4	11.4	---
		Hi PR	243	245	246	---	282	283	284	---	322	323	324	---	364	366	367	---	411	412	414	---	460	461	463	---
		Lo PR	125	126	129	---	132	134	137	---	139	140	144	---	144	146	149	---	150	151	154	---	157	158	161	---
	1125	MBh	29.9	30.3	31.2	---	29.7	30.1	31.0	---	28.9	29.3	30.2	---	27.6	28.0	28.9	---	26.0	26.4	27.3	---	24.6	25.0	25.8	---
		S/T	0.72	0.64	0.50	---	0.72	0.65	0.51	---	0.75	0.67	0.53	---	1.00	0.69	0.55	---	1.00	0.71	0.57	---	1.00	0.77	0.63	---
		ΔT	18	16	13	---	18	16	12	---	18	16	13	---	18	16	12	---	17	16	12	---	19	17	13	---
		kW	1.69	1.69	1.69	---	1.88	1.88	1.88	---	2.09	2.09	2.09	---	2.32	2.32	2.31	---	2.57	2.57	2.57	---	2.87	2.87	2.87	---
		Amps	6.1	6.1	6.1	---	6.9	6.9	6.9	---	7.9	7.9	7.9	---	8.9	8.9	8.9	---	10.1	10.1	10.1	---	11.5	11.5	11.4	---
		Hi PR	245	247	248	---	284	285	286	---	323	325	326	---	366	368	369	---	413	414	416	---	462	463	465	---
		Lo PR	127	128	131	---	134	136	139	---	141	142	146	---	146	148	151	---	152	153	156	---	159	160	163	---
75	875	MBh	29.1	29.5	30.4	31.7	28.9	29.3	30.1	31.5	28.1	28.5	29.4	30.7	26.8	27.2	28.1	29.4	25.2	25.6	26.5	27.8	23.7	24.1	25.0	26.3
		S/T	0.75	0.68	0.54	0.39	0.76	0.68	0.54	0.40	1.00	0.71	0.57	0.42	1.00	0.73	0.59	0.44	1.00	0.75	0.61	0.46	1.00	1.00	0.66	0.52
		ΔT	24	22	19	15	24	22	19	15	24	22	19	15	24	22	19	15	24	22	18	15	25	23	19	16
		kW	1.67	1.67	1.67	1.68	1.86	1.86	1.86	1.87	2.07	2.07	2.07	2.08	2.30	2.30	2.29	2.31	2.55	2.55	2.55	2.56	2.85	2.85	2.85	2.86
		Amps	6.0	6.0	6.0	6.0	6.8	6.8	6.8	6.9	7.8	7.8	7.8	7.9	8.9	8.8	8.8	8.9	10.0	10.0	10.0	10.1	11.4	11.4	11.4	11.4
		Hi PR	242	243	244	249	280	281	282	287	320	321	322	327	363	364	365	370	409	410	412	416	458	459	461	465
		Lo PR	123	125	128	133	131	132	135	140	137	139	142	147	143	144	147	153	148	150	153	158	155	156	160	165
	1000	MBh	29.5	29.9	30.8	32.1	29.2	29.6	30.5	31.8	28.5	28.9	29.8	31.1	27.2	**27.6**	28.4	29.8	25.6	26.0	26.9	28.2	24.1	24.5	25.4	26.7
		S/T	0.81	0.74	0.60	0.45	0.82	0.74	0.60	0.46	1.00	0.77	0.63	0.48	1.00	**0.79**	0.65	0.50	1.00	0.81	0.67	0.53	1.00	1.00	0.73	0.58
		ΔT	23	21	18	14	23	21	17	14	23	21	18	14	23	**21**	17	14	22	21	17	14	24	22	18	15
		kW	1.68	1.68	1.68	1.69	1.87	1.87	1.87	1.88	2.08	2.08	2.08	2.09	2.31	**2.31**	2.30	2.32	2.56	2.56	2.56	2.57	2.86	2.86	2.86	2.87
		Amps	6.0	6.0	6.0	6.1	6.9	6.9	6.9	6.9	7.9	7.8	7.8	7.9	8.9	**8.9**	8.9	8.9	10.1	10.1	10.0	10.1	11.4	11.4	11.4	11.5
		Hi PR	244	245	246	251	282	283	285	289	322	323	324	329	365	**366**	367	372	411	412	414	418	460	462	463	467
		Lo PR	125	126	129	135	132	134	137	142	139	140	144	149	144	**146**	149	154	150	151	155	160	157	158	161	167
	1125	MBh	30.0	30.4	31.2	32.6	29.7	30.1	31.0	32.3	28.9	29.3	30.2	31.5	27.6	28.0	28.9	30.2	26.0	26.4	27.3	28.6	24.6	25.0	25.9	27.2
		S/T	0.85	0.77	0.63	0.49	1.00	0.78	0.64	0.49	1.00	0.80	0.66	0.52	1.00	0.82	0.68	0.54	1.00	0.85	0.71	0.56	1.00	1.00	0.76	0.61
		ΔT	22	20	17	13	22	20	17	13	22	20	17	13	22	20	17	13	22	20	16	13	23	21	17	14
		kW	1.69	1.69	1.69	1.70	1.88	1.88	1.87	1.89	2.09	2.09	2.08	2.10	2.32	2.32	2.31	2.33	2.57	2.57	2.57	2.58	2.87	2.87	2.86	2.88
		Amps	6.1	6.1	6.0	6.1	6.9	6.9	6.9	7.0	7.9	7.9	7.9	7.9	8.9	8.9	8.9	9.0	10.1	10.1	10.1	10.1	11.5	11.5	11.4	11.5
		Hi PR	246	247	248	253	284	285	287	291	324	325	326	331	367	368	369	374	413	414	416	420	462	464	465	469
		Lo PR	127	128	132	137	134	136	139	144	141	142	146	151	146	148	151	156	152	153	157	162	159	160	163	169

IDB: Entering Indoor Dry Bulb Temperature

Shaded area reflects ACCA (TVA) conditions

Amps = outdoor unit amps (comp.+fan)

High and low pressures are measured at the liquid and suction service valves.

kW = Total system power

Expanded Cooling Data — GSX16[0311/A301]**/CA*F3743*6D*+TXV (cont.)

			Outdoor Ambient Temperature																							
			65ºF				75ºF				85ºF				95ºF				105ºF				115ºF			
			Entering Indoor Wet Bulb Temperature																							
IDB	Airflow		59	63	67	71	59	63	67	71	59	63	67	71	59	63	67	71	59	63	67	71	59	63	67	71
80	875	MBh	29.3	29.7	30.5	31.9	29.0	29.4	30.3	31.6	28.2	28.7	29.5	30.9	26.9	27.3	28.2	29.5	25.3	25.8	26.6	27.9	23.9	24.3	25.2	26.5
		S/T	1.00	0.80	0.66	0.52	1.00	0.81	0.67	0.52	1.00	0.84	0.70	0.55	1.00	0.86	0.72	0.57	1.00	1.00	0.74	0.59	1.00	1.00	0.79	0.65
		ΔT	28	26	23	19	28	26	23	19	28	26	23	19	28	26	23	19	28	26	22	19	29	27	24	20
		kW	1.67	1.67	1.67	1.68	1.86	1.86	1.86	1.87	2.07	2.07	2.07	2.08	2.30	2.30	2.30	2.31	2.55	2.55	2.55	2.56	2.85	2.85	2.85	2.86
		Amps	6.0	6.0	6.0	6.0	6.9	6.8	6.8	6.9	7.8	7.8	7.8	7.9	8.9	8.8	8.8	8.9	10.0	10.0	10.0	10.1	11.4	11.4	11.4	11.4
		Hi PR	242	243	245	249	280	281	283	287	320	321	323	327	363	364	366	370	409	410	412	416	459	460	462	466
		Lo PR	124	125	128	133	131	133	136	141	138	139	142	148	143	145	148	153	149	150	153	158	155	157	160	165
	1000	MBh	29.6	30.1	30.9	32.3	29.4	29.8	30.7	32.0	28.6	29.0	29.9	31.2	27.3	27.7	**28.6**	29.9	25.7	26.1	27.0	28.3	24.3	24.7	25.5	26.9
		S/T	1.00	0.87	0.73	0.58	1.00	0.87	0.73	0.59	1.00	0.90	0.76	0.61	1.00	1.00	**0.78**	0.63	1.00	1.00	0.80	0.65	1.00	1.00	0.85	0.71
		ΔT	27	25	22	18	27	25	22	18	27	25	22	18	27	25	**21**	18	27	25	21	18	28	26	22	19
		kW	1.68	1.68	1.68	1.69	1.87	1.87	1.87	1.88	2.08	2.08	2.08	2.09	2.31	2.31	**2.30**	2.32	2.56	2.56	2.56	2.57	2.86	2.86	2.86	2.87
		Amps	6.0	6.0	6.0	6.1	6.9	6.9	6.9	6.9	7.9	7.9	7.8	7.9	8.9	8.9	**8.9**	8.9	10.1	10.1	10.0	10.1	11.4	11.4	11.4	11.5
		Hi PR	244	245	247	251	282	283	285	289	322	323	325	329	365	366	**368**	372	411	413	414	418	461	462	464	468
		Lo PR	125	127	130	135	133	134	138	143	139	141	144	149	145	146	**150**	155	150	152	155	160	157	159	162	167
	1125	MBh	30.1	30.5	31.4	32.7	29.8	30.3	31.1	32.5	29.1	29.5	30.4	31.7	27.8	28.2	29.1	30.4	26.2	26.6	27.5	28.8	24.7	25.1	26.0	27.3
		S/T	1.00	0.90	0.76	0.61	1.00	0.91	0.77	0.62	1.00	0.93	0.79	0.65	1.00	1.00	0.81	0.67	1.00	1.00	0.84	0.69	1.00	1.00	0.89	0.74
		ΔT	26	24	21	17	26	24	21	17	26	24	21	17	26	24	21	17	26	24	20	17	27	25	21	18
		kW	1.69	1.69	1.69	1.70	1.88	1.88	1.88	1.89	2.09	2.09	2.09	2.10	2.32	2.32	2.31	2.33	2.57	2.57	2.57	2.58	2.87	2.87	2.86	2.88
		Amps	6.1	6.1	6.1	6.1	6.9	6.9	6.9	7.0	7.9	7.9	7.9	7.9	8.9	8.9	8.9	9.0	10.1	10.1	10.1	10.1	11.5	11.5	11.4	11.5
		Hi PR	246	247	249	253	284	285	287	291	324	325	327	331	367	368	370	374	413	415	416	420	463	464	466	470
		Lo PR	127	129	132	137	135	136	140	145	141	143	146	151	147	148	152	157	152	154	157	162	159	161	164	169
85	875	MBh	29.8	30.2	31.0	32.4	29.5	29.9	30.8	32.1	28.7	29.1	30.0	31.3	27.4	27.8	28.7	30.0	25.8	26.2	27.1	28.4	24.4	24.8	25.7	27.0
		S/T	1.00	0.91	0.77	0.62	1.00	0.91	0.77	0.63	1.00	1.00	0.80	0.65	1.00	1.00	0.82	0.67	1.00	1.00	0.84	0.70	1.00	1.00	1.00	0.75
		ΔT	32	30	26	23	31	30	26	23	32	30	26	23	31	30	26	23	31	29	26	22	32	31	27	24
		kW	1.68	1.68	1.67	1.69	1.87	1.86	1.86	1.88	2.08	2.07	2.07	2.09	2.30	2.30	2.30	2.31	2.56	2.56	2.55	2.57	2.86	2.85	2.85	2.86
		Amps	6.0	6.0	6.0	6.1	6.9	6.9	6.8	6.9	7.8	7.8	7.8	7.9	8.9	8.9	8.9	8.9	10.0	10.0	10.0	10.1	11.4	11.4	11.4	11.4
		Hi PR	243	244	246	250	281	282	284	288	321	322	324	328	364	365	367	371	411	412	413	418	460	461	463	467
		Lo PR	125	127	130	135	133	134	138	143	139	141	144	149	145	147	150	155	150	152	155	160	157	159	162	167
	1000	MBh	30.1	30.5	31.4	32.7	29.9	30.3	31.2	32.5	29.1	29.5	30.4	31.7	27.8	28.2	29.1	30.4	26.2	26.6	27.5	28.8	24.8	25.2	26.0	27.4
		S/T	1.00	0.97	0.83	0.68	1.00	1.00	0.84	0.69	1.00	1.00	0.86	0.72	1.00	1.00	0.88	0.74	1.00	1.00	0.90	0.76	1.00	1.00	1.00	0.81
		ΔT	30	29	25	22	30	29	25	22	31	29	25	22	30	29	25	22	30	28	25	21	31	29	26	22
		kW	1.69	1.69	1.68	1.70	1.88	1.87	1.87	1.89	2.09	2.08	2.08	2.10	2.31	2.31	2.31	2.32	2.57	2.57	2.56	2.58	2.87	2.86	2.86	2.87
		Amps	6.1	6.0	6.0	6.1	6.9	6.9	6.9	7.0	7.9	7.9	7.9	7.9	8.9	8.9	8.9	9.0	10.1	10.1	10.1	10.1	11.4	11.4	11.4	11.5
		Hi PR	245	246	248	252	283	284	286	290	323	324	326	330	366	367	369	373	413	414	415	420	462	463	465	469
		Lo PR	127	129	132	137	135	136	139	145	141	143	146	151	147	148	151	157	152	154	157	162	159	161	164	169
	1125	MBh	30.6	31.0	31.9	33.2	30.3	30.7	31.6	32.9	29.6	30.0	30.9	32.2	28.3	28.7	29.5	30.9	26.7	27.1	28.0	29.3	25.2	25.6	26.5	27.8
		S/T	1.00	1.00	0.86	0.72	1.00	1.00	0.87	0.72	1.00	1.00	0.90	0.75	1.00	1.00	0.92	0.77	1.00	1.00	1.00	0.79	1.00	1.00	1.00	0.85
		ΔT	29	28	24	21	29	28	24	21	30	28	24	21	29	28	24	21	29	27	24	20	30	28	25	22
		kW	1.70	1.69	1.69	1.71	1.88	1.88	1.88	1.89	2.09	2.09	2.09	2.10	2.32	2.32	2.32	2.33	2.58	2.57	2.57	2.59	2.87	2.87	2.87	2.88
		Amps	6.1	6.1	6.1	6.1	7.0	6.9	6.9	7.0	7.9	7.9	7.9	8.0	9.0	8.9	8.9	9.0	10.1	10.1	10.1	10.2	11.5	11.5	11.5	11.5
		Hi PR	247	248	250	254	285	286	288	292	325	326	328	332	368	369	371	375	415	416	417	422	464	465	467	471
		Lo PR	129	131	134	139	137	138	141	147	143	145	148	153	149	150	153	159	154	156	159	164	161	163	166	171

IDB: Entering Indoor Dry Bulb Temperature

Shaded area reflects AHRI conditions

Amps = outdoor unit amps (comp.+fan)

High and low pressures are measured at the liquid and suction service valves.

kW = Total system power

Expanded Cooling Data — GSX16[0/S]361**/CA*F4860*6D*+TXV

			Outdoor Ambient Temperature																							
			65ºF				75ºF				85ºF				95ºF				105ºF				115ºF			
			Entering Indoor Wet Bulb Temperature																							
IDB	Airflow		59	63	67	71	59	63	67	71	59	63	67	71	59	63	67	71	59	63	67	71	59	63	67	71
70	1050	MBh	30.6	31.7	34.7	-	29.8	30.9	33.9	-	29.1	30.2	33.1	-	28.4	29.5	32.3	-	27.0	28.0	30.7	-	25.0	25.9	28.4	-
		S/T	0.71	0.59	0.41	-	0.74	0.62	0.43	-	0.76	0.63	0.44	-	0.78	0.65	0.45	-	0.81	0.68	0.47	-	0.82	0.68	0.47	-
		ΔT	19	16	13	-	19	17	13	-	19	17	13	-	19	17	13	-	19	17	13	-	18	15	12	-
		kW	2.23	2.27	2.34	-	2.39	2.44	2.51	-	2.53	2.58	2.66	-	2.65	2.70	2.79	-	2.75	2.81	2.90	-	2.84	2.90	2.99	-
		Amps	8.1	8.3	8.5	-	8.7	8.9	9.2	-	9.5	9.7	10.0	-	10.1	10.4	10.7	-	10.8	11.1	11.4	-	11.5	11.7	12.1	-
		Hi PR	219	236	249	-	246	265	280	-	280	301	318	-	319	343	362	-	359	386	407	-	396	426	450	-
		Lo PR	103	109	120	-	109	116	126	-	113	120	131	-	119	126	138	-	124	132	144	-	129	137	149	-
	1200	MBh	33.1	34.3	37.6	-	32.3	33.5	36.7	-	31.6	32.7	35.8	-	30.8	31.9	35.0	-	29.3	30.3	33.2	-	27.1	28.1	30.8	-
		S/T	0.74	0.62	0.43	-	0.76	0.64	0.44	-	0.78	0.65	0.45	-	0.81	0.68	0.47	-	0.84	0.70	0.49	-	0.85	0.71	0.49	-
		ΔT	19	16	12	-	19	16	12	-	19	16	12	-	19	17	13	-	19	16	12	-	18	15	12	-
		kW	2.28	2.33	2.39	-	2.44	2.49	2.57	-	2.59	2.64	2.72	-	2.71	2.77	2.85	-	2.82	2.88	2.97	-	2.91	2.97	3.07	-
		Amps	8.3	8.5	8.8	-	9.0	9.2	9.5	-	9.8	10.0	10.3	-	10.4	10.7	11.1	-	11.1	11.4	11.8	-	11.8	12.1	12.5	-
		Hi PR	226	243	257	-	254	273	288	-	288	310	328	-	329	354	373	-	370	398	420	-	408	440	464	-
		Lo PR	106	113	123	-	112	119	130	-	116	124	135	-	122	130	142	-	128	136	149	-	133	141	154	-
	1350	MBh	34.1	35.3	38.7	-	33.3	34.5	37.8	-	32.5	33.7	36.9	-	31.7	32.9	36.0	-	30.1	31.2	34.2	-	27.9	28.9	31.7	-
		S/T	0.77	0.65	0.45	-	0.80	0.67	0.46	-	0.82	0.69	0.48	-	0.85	0.71	0.49	-	0.88	0.74	0.51	-	0.89	0.74	0.51	-
		ΔT	18	16	12	-	18	16	12	-	18	16	12	-	18	16	12	-	18	16	12	-	17	15	11	-
		kW	2.30	2.34	2.41	-	2.46	2.51	2.59	-	2.61	2.66	2.74	-	2.73	2.79	2.88	-	2.84	2.90	2.99	-	2.94	3.00	3.09	-
		Amps	8.4	8.6	8.9	-	9.1	9.3	9.6	-	9.9	10.1	10.4	-	10.5	10.8	11.2	-	11.2	11.5	11.9	-	11.9	12.2	12.6	-
		Hi PR	228	246	259	-	256	276	291	-	291	314	331	-	332	357	377	-	373	402	424	-	413	444	469	-
		Lo PR	107	114	124	-	113	120	131	-	118	125	137	-	124	131	144	-	130	138	150	-	134	143	156	-
75	1050	MBh	31.1	32.0	34.6	37.2	30.4	31.3	33.8	36.3	29.6	30.5	33.0	35.4	28.9	**29.8**	32.2	34.6	27.5	28.3	30.6	32.8	25.4	26.2	28.4	30.4
		S/T	0.81	0.72	0.55	0.35	0.84	0.75	0.57	0.36	0.86	0.77	0.58	0.37	0.89	**0.79**	0.60	0.39	0.92	0.82	0.62	0.40	0.93	0.83	0.63	0.40
		ΔT	22	20	17	11	22	21	17	12	22	21	17	12	22	**21**	17	12	22	20	17	12	21	19	16	11
		kW	2.25	2.29	2.36	2.43	2.41	2.45	2.53	2.60	2.55	2.60	2.68	2.76	2.67	**2.73**	2.81	2.90	2.78	2.83	2.92	3.01	2.87	2.93	3.02	3.11
		Amps	8.1	8.3	8.6	8.9	8.8	9.0	9.3	9.7	9.6	9.8	10.1	10.5	10.2	**10.5**	10.9	11.3	10.9	11.2	11.6	12.0	11.6	11.9	12.3	12.7
		Hi PR	222	238	252	263	249	267	282	295	283	304	321	335	322	**346**	366	382	362	390	412	429	400	431	455	474
		Lo PR	104	111	121	129	110	117	128	136	114	121	133	141	120	**128**	139	148	126	134	146	155	130	138	151	161
	1200	MBh	33.7	34.7	37.5	40.3	32.9	33.9	36.6	39.3	32.1	33.1	35.8	38.4	31.3	**32.2**	34.9	37.5	29.8	30.6	33.2	35.6	27.6	28.4	30.7	33.0
		S/T	0.84	0.75	0.57	0.37	0.87	0.78	0.59	0.38	0.89	0.80	0.60	0.39	0.92	**0.82**	0.62	0.40	0.95	0.85	0.65	0.42	0.96	0.86	0.65	0.42
		ΔT	22	20	16	11	22	20	17	11	22	20	17	11	22	**20**	17	11	22	20	16	11	20	19	15	11
		kW	2.30	2.34	2.41	2.48	2.46	2.51	2.59	2.67	2.61	2.66	2.74	2.83	2.73	**2.79**	2.88	2.97	2.84	2.90	2.99	3.09	2.94	3.00	3.09	3.19
		Amps	8.4	8.6	8.9	9.2	9.1	9.3	9.6	10.0	9.9	10.1	10.4	10.8	10.5	**10.8**	11.2	11.6	11.2	11.5	11.9	12.3	11.9	12.2	12.6	13.1
		Hi PR	228	246	260	271	256	276	291	304	291	314	331	345	332	**357**	377	393	373	402	424	443	413	444	469	489
		Lo PR	107	114	124	133	113	120	131	140	118	125	137	146	124	**131**	144	153	130	138	150	160	134	143	156	166
	1350	MBh	34.7	35.7	38.6	41.5	33.9	34.9	37.7	40.5	33.1	34.0	36.9	39.6	32.3	**33.2**	36.0	38.6	30.6	31.6	34.2	36.7	28.4	29.2	31.6	34.0
		S/T	0.88	0.79	0.60	0.38	0.91	0.81	0.62	0.40	0.93	0.84	0.63	0.41	0.96	**0.86**	0.65	0.42	1.00	0.90	0.68	0.44	1.00	0.90	0.68	0.44
		ΔT	21	19	16	11	21	19	16	11	21	19	16	11	21	**20**	16	11	21	19	16	11	19	18	15	10
		kW	2.32	2.36	2.43	2.50	2.48	2.53	2.61	2.69	2.63	2.68	2.76	2.85	2.76	**2.81**	2.90	2.99	2.86	2.93	3.02	3.11	2.96	3.02	3.12	3.22
		Amps	8.5	8.7	8.9	9.3	9.1	9.4	9.7	10.0	9.9	10.2	10.5	10.9	10.6	**10.9**	11.3	11.7	11.3	11.6	12.0	12.5	12.0	12.3	12.7	13.2
		Hi PR	231	248	262	273	259	279	294	307	294	317	334	349	335	**361**	381	397	377	406	429	447	417	448	474	494
		Lo PR	108	115	126	134	114	122	133	141	119	126	138	147	125	**133**	145	154	131	139	152	162	135	144	157	167

IDB: Entering Indoor Dry Bulb Temperature

Shaded area reflects ACCA (TVA) conditions

Amps = outdoor unit amps (comp.+fan)

High and low pressures are measured at the liquid and suction service valves.

kW = Total system power

			Outdoor Ambient Temperature																							
			65ºF				75ºF				85ºF				95ºF				105ºF				115ºF			
			Entering Indoor Wet Bulb Temperature																							
IDB	Airflow		59	63	67	71	59	63	67	71	59	63	67	71	59	63	67	71	59	63	67	71	59	63	67	71
80	1050	MBh	31.6	32.3	34.5	36.9	30.9	31.6	33.7	36.1	30.2	30.8	32.9	35.2	29.4	30.1	32.1	34.3	28.0	28.6	30.5	32.6	25.9	26.5	28.3	30.2
		S/T	0.89	0.83	0.68	0.51	0.92	0.86	0.70	0.52	0.94	0.88	0.72	0.54	0.97	0.91	0.74	0.55	1.01	0.95	0.77	0.58	1.02	0.95	0.78	0.58
		ΔT	25	24	20	16	25	24	21	17	25	24	21	17	25	24	21	17	25	24	21	16	23	22	19	15
		kW	2.26	2.31	2.38	2.45	2.42	2.47	2.55	2.62	2.57	2.62	2.70	2.78	2.69	2.75	2.83	2.92	2.80	2.86	2.94	3.04	2.89	2.95	3.04	3.14
		Amps	8.2	8.4	8.7	9.0	8.9	9.1	9.4	9.8	9.7	9.9	10.2	10.6	10.3	10.6	11.0	11.4	11.0	11.3	11.7	12.1	11.7	12.0	12.4	12.8
		Hi PR	224	241	254	265	251	270	285	298	286	307	324	338	325	350	370	385	366	394	416	434	404	435	459	479
		Lo PR	105	112	122	130	111	118	129	137	115	123	134	143	121	129	141	150	127	135	147	157	131	140	152	162
	1200	MBh	34.3	35.0	37.4	40.0	33.5	34.2	36.5	39.1	32.7	33.4	35.7	38.1	31.9	32.6	**34.8**	37.2	30.3	30.9	33.1	35.3	28.1	28.7	30.6	32.7
		S/T	0.92	0.86	0.70	0.52	0.95	0.89	0.73	0.54	0.98	0.92	0.75	0.56	1.00	0.95	**0.77**	0.58	1.00	0.98	0.80	0.60	1.00	0.99	0.81	0.60
		ΔT	24	23	20	16	24	23	20	16	24	23	20	16	24	24	**21**	16	23	23	20	16	21	22	19	15
		kW	2.32	2.36	2.43	2.50	2.48	2.53	2.61	2.69	2.63	2.68	2.76	2.85	2.76	2.81	**2.90**	2.99	2.87	2.93	3.02	3.11	2.96	3.02	3.12	3.22
		Amps	8.5	8.7	8.9	9.3	9.1	9.4	9.7	10.0	9.9	10.2	10.5	10.9	10.6	10.9	**11.3**	11.7	11.3	11.6	12.0	12.5	12.0	12.3	12.7	13.2
		Hi PR	231	248	262	273	259	279	294	307	294	317	335	349	335	361	**381**	397	377	406	429	447	417	448	474	494
		Lo PR	108	115	126	134	114	122	133	141	119	126	138	147	125	133	**145**	154	131	139	152	162	135	144	157	167
	1350	MBh	35.3	36.1	38.5	41.2	34.5	35.2	37.6	40.2	33.7	34.4	36.7	39.3	32.8	33.5	35.8	38.3	31.2	31.9	34.1	36.4	28.9	29.5	31.5	33.7
		S/T	0.96	0.90	0.74	0.55	1.00	0.94	0.76	0.57	1.00	0.96	0.78	0.58	1.00	1.00	0.81	0.60	1.00	1.00	0.84	0.63	1.00	1.00	0.84	0.63
		ΔT	23	22	19	15	23	22	20	16	23	23	20	16	22	23	20	16	21	22	19	16	20	20	18	15
		kW	2.33	2.38	2.45	2.52	2.50	2.55	2.63	2.71	2.65	2.70	2.78	2.87	2.78	2.84	2.92	3.02	2.89	2.95	3.04	3.14	2.98	3.05	3.14	3.24
		Amps	8.5	8.7	9.0	9.4	9.2	9.5	9.8	10.1	10.0	10.3	10.6	11.0	10.7	11.0	11.4	11.8	11.4	11.7	12.1	12.6	12.1	12.4	12.8	13.3
		Hi PR	233	251	265	276	261	281	297	310	297	320	338	352	339	364	385	401	381	410	433	452	421	453	478	499
		Lo PR	109	116	127	135	116	123	134	143	120	128	139	148	126	134	146	156	132	141	153	163	137	145	159	169
85	1050	MBh	32.2	32.8	34.4	36.7	31.4	32.0	33.6	35.8	30.7	31.3	32.8	34.9	29.9	30.5	32.0	34.1	28.4	29.0	30.4	32.4	26.3	26.9	28.1	30.0
		S/T	0.93	0.90	0.81	0.66	0.96	0.93	0.84	0.68	0.99	0.95	0.86	0.70	1.00	0.98	0.89	0.72	1.00	1.00	0.92	0.75	1.00	1.00	0.93	0.75
		ΔT	26	26	24	21	27	26	25	21	27	26	25	21	26	26	25	22	25	25	25	21	23	24	23	20
		kW	2.28	2.33	2.39	2.46	2.44	2.49	2.57	2.64	2.59	2.64	2.72	2.80	2.71	2.77	2.85	2.94	2.82	2.88	2.97	3.06	2.91	2.97	3.07	3.16
		Amps	8.3	8.5	8.8	9.1	9.0	9.2	9.5	9.9	9.8	10.0	10.3	10.7	10.4	10.7	11.1	11.5	11.1	11.4	11.8	12.2	11.8	12.1	12.5	13.0
		Hi PR	226	243	257	268	254	273	288	301	288	310	328	342	328	353	373	389	370	398	420	438	408	439	464	484
		Lo PR	106	113	123	131	112	119	130	139	116	124	135	144	122	130	142	151	128	136	149	159	133	141	154	164
	1200	MBh	34.9	35.5	37.2	39.7	34.1	34.7	36.4	38.8	33.2	33.9	35.5	37.9	32.4	33.1	34.6	36.9	30.8	31.4	32.9	35.1	28.5	29.1	30.5	32.5
		S/T	0.96	0.93	0.84	0.68	1.00	0.96	0.87	0.71	1.00	0.99	0.89	0.72	1.00	1.00	0.92	0.75	1.00	1.00	0.96	0.78	1.00	1.00	0.96	0.78
		ΔT	26	25	24	21	26	26	24	21	25	26	24	21	25	25	24	21	24	24	24	21	22	22	22	19
		kW	2.33	2.38	2.45	2.52	2.50	2.55	2.63	2.71	2.65	2.70	2.78	2.87	2.78	2.84	2.92	3.02	2.89	2.95	3.04	3.14	2.98	3.05	3.14	3.24
		Amps	8.5	8.7	9.0	9.4	9.2	9.5	9.8	10.1	10.0	10.3	10.6	11.0	10.7	11.0	11.4	11.8	11.4	11.7	12.1	12.6	12.1	12.4	12.8	13.3
		Hi PR	233	251	265	276	261	281	297	310	297	320	338	352	339	364	385	401	381	410	433	452	421	453	478	499
		Lo PR	109	116	127	135	116	123	134	143	120	128	139	148	126	134	146	156	132	141	153	163	137	145	159	169
	1350	MBh	35.9	36.6	38.3	40.9	35.1	35.8	37.4	40.0	34.2	34.9	36.6	39.0	33.4	34.1	35.7	38.0	31.7	32.4	33.9	36.1	29.4	30.0	31.4	33.5
		S/T	1.00	0.98	0.88	0.71	1.00	1.00	0.91	0.74	1.00	1.00	0.94	0.76	1.00	1.00	0.97	0.78	1.00	1.00	1.00	0.81	1.00	1.00	1.00	0.82
		ΔT	24	24	23	20	24	24	23	20	23	24	23	20	23	23	23	20	22	22	23	20	20	20	21	19
		kW	2.35	2.40	2.47	2.54	2.52	2.57	2.65	2.73	2.67	2.72	2.81	2.89	2.80	2.86	2.95	3.04	2.91	2.97	3.07	3.16	3.01	3.07	3.17	3.27
		Amps	8.6	8.8	9.1	9.5	9.3	9.5	9.9	10.2	10.1	10.4	10.7	11.1	10.8	11.1	11.5	11.9	11.5	11.8	12.2	12.7	12.2	12.5	13.0	13.5
		Hi PR	235	253	267	279	264	284	300	313	300	323	341	356	342	368	389	405	385	414	437	456	425	457	483	504
		Lo PR	110	117	128	137	117	124	135	144	121	129	141	150	127	135	148	158	133	142	155	165	138	147	160	171

IDB: Entering Indoor Dry Bulb Temperature

Shaded area reflects AHRI conditions

Amps = outdoor unit amps (comp.+fan)

High and low pressures are measured at the liquid and suction service valves.

kW = Total system power

Expanded Cooling Data — GSX16[0371*A361]**/CA*F4860*6D*+TXV

			Outdoor Ambient Temperature																							
			65ºF				75ºF				85ºF				95ºF				105ºF				115ºF			
			Entering Indoor Wet Bulb Temperature																							
IDB	Airflow		59	63	67	71	59	63	67	71	59	63	67	71	59	63	67	71	59	63	67	71	59	63	67	71
70	1050	MBh	36.6	37.1	38.2	---	36.3	36.8	37.9	---	35.3	35.9	37.0	---	33.7	34.2	35.3	---	31.7	32.2	33.3	---	29.8	30.4	31.5	---
		S/T	0.60	0.53	0.39	---	0.61	0.53	0.40	---	0.63	0.56	0.42	---	0.65	0.58	0.44	---	0.67	0.60	0.46	---	1.00	0.65	0.51	---
		ΔT	21	19	15	---	21	19	15	---	21	19	16	---	21	19	15	---	21	19	15	---	22	20	16	---
		kW	2.10	2.10	2.10	---	2.34	2.34	2.34	---	2.61	2.61	2.60	---	2.90	2.89	2.89	---	3.22	3.21	3.21	---	3.59	3.59	3.59	---
		Amps	7.6	7.6	7.6	---	8.7	8.7	8.7	---	9.9	9.9	9.9	---	11.2	11.2	11.2	---	12.7	12.7	12.7	---	14.4	14.4	14.4	---
		Hi PR	245	246	248	---	283	285	286	---	324	325	327	---	367	369	370	---	414	416	417	---	465	466	467	---
		Lo PR	118	120	123	---	126	127	130	---	132	133	136	---	137	139	142	---	143	144	147	---	149	151	154	---
	1200	MBh	37.1	37.6	38.7	---	36.8	37.3	38.4	---	35.8	36.3	37.4	---	34.2	34.7	35.8	---	32.2	32.7	33.8	---	30.3	30.8	31.9	---
		S/T	0.66	0.59	0.45	---	0.67	0.59	0.46	---	0.69	0.62	0.48	---	0.71	0.64	0.50	---	1.00	0.66	0.52	---	1.00	0.71	0.57	---
		ΔT	20	18	14	---	20	18	14	---	20	18	14	---	20	18	14	---	19	17	14	---	21	19	15	---
		kW	2.12	2.11	2.11	---	2.35	2.35	2.35	---	2.62	2.62	2.61	---	2.91	2.91	2.90	---	3.23	3.23	3.22	---	3.61	3.60	3.60	---
		Amps	7.7	7.7	7.7	---	8.8	8.8	8.7	---	10.0	10.0	10.0	---	11.3	11.3	11.3	---	12.8	12.8	12.7	---	14.5	14.5	14.5	---
		Hi PR	247	248	250	---	286	287	288	---	326	327	329	---	370	371	372	---	417	418	419	---	467	468	469	---
		Lo PR	120	122	125	---	127	129	132	---	134	135	138	---	139	140	143	---	144	146	149	---	151	152	155	---
	1350	MBh	37.7	38.2	39.3	---	37.4	37.9	39.0	---	36.4	36.9	38.0	---	34.8	35.3	36.4	---	32.7	33.3	34.4	---	30.9	31.4	32.5	---
		S/T	0.70	0.62	0.48	---	0.70	0.63	0.49	---	0.73	0.65	0.52	---	0.75	0.67	0.54	---	1.00	0.69	0.56	---	1.00	0.74	0.61	---
		ΔT	19	17	13	---	19	17	13	---	19	17	13	---	19	17	13	---	18	16	13	---	20	18	14	---
		kW	2.13	2.12	2.12	---	2.36	2.36	2.36	---	2.63	2.63	2.62	---	2.92	2.92	2.91	---	3.24	3.24	3.23	---	3.62	3.61	3.61	---
		Amps	7.7	7.7	7.7	---	8.8	8.8	8.8	---	10.0	10.0	10.0	---	11.4	11.3	11.3	---	12.8	12.8	12.8	---	14.5	14.5	14.5	---
		Hi PR	249	250	252	---	288	289	290	---	328	329	331	---	372	373	374	---	419	420	421	---	469	470	472	---
		Lo PR	122	124	127	---	129	131	134	---	136	137	140	---	141	142	145	---	146	148	151	---	153	154	157	---
75	1050	MBh	36.6	37.2	38.3	39.9	36.3	36.8	37.9	39.6	35.4	35.9	37.0	38.6	33.7	34.2	35.3	37.0	31.7	32.2	33.3	35.0	29.9	30.4	31.5	33.2
		S/T	0.73	0.65	0.52	0.38	0.74	0.66	0.53	0.38	0.76	0.69	0.55	0.41	1.00	0.70	0.57	0.43	1.00	0.73	0.59	0.45	1.00	0.78	0.64	0.50
		ΔT	25	23	20	16	25	23	20	16	25	23	20	16	25	23	20	16	25	23	19	16	26	24	20	17
		kW	2.10	2.10	2.10	2.11	2.34	2.34	2.33	2.35	2.61	2.60	2.60	2.62	2.89	2.89	2.89	2.91	3.22	3.21	3.21	3.23	3.59	3.59	3.59	3.60
		Amps	7.6	7.6	7.6	7.7	8.7	8.7	8.7	8.8	9.9	9.9	9.9	10.0	11.2	11.2	11.2	11.3	12.7	12.7	12.7	12.8	14.4	14.4	14.4	14.5
		Hi PR	245	246	248	252	284	285	286	291	324	325	327	331	368	369	370	375	415	416	417	422	465	466	468	472
		Lo PR	118	120	123	128	126	127	130	135	132	133	136	141	137	139	142	147	143	144	147	152	149	151	154	159
	1200	MBh	37.1	37.6	38.7	40.4	36.8	37.3	38.4	40.1	35.8	36.4	37.5	39.1	34.2	**34.7**	35.8	37.5	32.2	32.7	33.8	35.5	30.4	30.9	32.0	33.6
		S/T	0.79	0.71	0.58	0.44	0.80	0.72	0.59	0.44	1.00	0.75	0.61	0.47	1.00	**0.76**	0.63	0.49	1.00	0.79	0.65	0.51	1.00	0.84	0.70	0.56
		ΔT	24	22	18	15	24	22	18	15	24	22	19	15	24	**22**	18	15	24	22	18	14	25	23	19	16
		kW	2.11	2.11	2.11	2.13	2.35	2.35	2.35	2.36	2.62	2.62	2.61	2.63	2.91	**2.90**	2.90	2.92	3.23	3.23	3.22	3.24	3.60	3.60	3.60	3.62
		Amps	7.7	7.7	7.6	7.7	8.8	8.8	8.7	8.8	10.0	10.0	10.0	10.0	11.3	**11.3**	11.3	11.4	12.8	12.8	12.7	12.8	14.5	14.5	14.5	14.5
		Hi PR	247	248	250	254	286	287	289	293	326	327	329	333	370	**371**	373	377	417	418	420	424	467	468	470	474
		Lo PR	120	122	125	130	127	129	132	137	134	135	138	143	139	**140**	144	149	144	146	149	154	151	152	155	160
	1350	MBh	37.7	38.2	39.3	41.0	37.4	37.9	39.0	40.7	36.4	36.9	38.0	39.7	34.8	35.3	36.4	38.1	32.8	33.3	34.4	36.0	30.9	31.4	32.5	34.2
		S/T	0.82	0.75	0.61	0.47	0.83	0.75	0.62	0.48	1.00	0.78	0.64	0.50	1.00	0.80	0.66	0.52	1.00	0.82	0.69	0.54	1.00	0.87	0.74	0.59
		ΔT	23	21	17	14	23	21	17	14	23	21	18	14	23	21	17	14	23	21	17	13	24	22	18	15
		kW	2.12	2.12	2.12	2.14	2.36	2.36	2.36	2.38	2.63	2.63	2.62	2.64	2.92	2.91	2.91	2.93	3.24	3.24	3.23	3.25	3.61	3.61	3.61	3.63
		Amps	7.7	7.7	7.7	7.8	8.8	8.8	8.8	8.9	10.0	10.0	10.0	10.1	11.3	11.3	11.3	11.4	12.8	12.8	12.8	12.9	14.5	14.5	14.5	14.6
		Hi PR	249	250	252	256	288	289	291	295	328	329	331	335	372	373	375	379	419	420	422	426	469	470	472	476
		Lo PR	122	124	127	132	129	131	134	139	136	137	140	145	141	142	145	150	146	148	151	156	153	154	157	162

IDB: Entering Indoor Dry Bulb Temperature

Shaded area reflects ACCA (TVA) conditions

Amps = outdoor unit amps (comp.+fan)

High and low pressures are measured at the liquid and suction service valves.

kW = Total system power

Expanded Cooling Data — GSX16[0371/A361]**/CA*F4860*6D*+TXV (cont.)

			Outdoor Ambient Temperature																							
			65ºF				75ºF				85ºF				95ºF				105ºF				115ºF			
			Entering Indoor Wet Bulb Temperature																							
IDB	Airflow		59	63	67	71	59	63	67	71	59	63	67	71	59	63	67	71	59	63	67	71	59	63	67	71
80	1050	MBh	36.8	37.4	38.4	40.1	36.5	37.0	38.1	39.8	35.6	36.1	37.2	38.8	33.9	34.4	35.5	37.2	31.9	32.4	33.5	35.2	30.1	30.6	31.7	33.3
		S/T	0.85	0.78	0.64	0.50	1.00	0.79	0.65	0.51	1.00	0.81	0.68	0.53	1.00	0.83	0.69	0.55	1.00	0.85	0.72	0.57	1.00	1.00	0.77	0.63
		ΔT	29	27	24	20	29	27	24	20	30	28	24	20	29	27	24	20	29	27	24	20	30	28	25	21
		kW	2.10	2.10	2.10	2.12	2.34	2.34	2.34	2.35	2.61	2.61	2.60	2.62	2.90	2.89	2.89	2.91	3.22	3.21	3.21	3.23	3.59	3.59	3.59	3.61
		Amps	7.6	7.6	7.6	7.7	8.7	8.7	8.7	8.8	9.9	9.9	9.9	10.0	11.2	11.2	11.2	11.3	12.7	12.7	12.7	12.8	14.4	14.4	14.4	14.5
		Hi PR	245	247	248	253	284	285	287	291	325	326	327	332	368	369	371	375	415	416	418	422	465	466	468	472
		Lo PR	119	120	123	128	126	128	131	136	132	134	137	142	138	139	142	147	143	145	148	153	150	151	154	159
	1200	MBh	37.3	37.8	38.9	40.6	37.0	37.5	38.6	40.3	36.0	36.6	37.6	39.3	34.4	34.9	**36.0**	37.7	32.4	32.9	34.0	35.7	30.5	31.1	32.2	33.8
		S/T	0.91	0.84	0.70	0.56	1.00	0.84	0.71	0.57	1.00	0.87	0.73	0.59	1.00	0.89	**0.75**	0.61	1.00	1.00	0.78	0.63	1.00	1.00	0.83	0.69
		ΔT	28	26	23	19	28	26	23	19	28	27	23	19	28	26	**23**	19	28	26	22	19	29	27	24	20
		kW	2.12	2.11	2.11	2.13	2.35	2.35	2.35	2.37	2.62	2.62	2.61	2.63	2.91	2.91	**2.90**	2.92	3.23	3.23	3.22	3.24	3.61	3.60	3.60	3.62
		Amps	7.7	7.7	7.7	7.7	8.8	8.8	8.7	8.8	10.0	10.0	10.0	10.0	11.3	11.3	**11.3**	11.4	12.8	12.8	12.7	12.8	14.5	14.5	14.5	14.6
		Hi PR	248	249	250	255	286	287	289	293	327	328	329	334	370	371	**373**	377	417	418	420	424	467	468	470	474
		Lo PR	121	122	125	130	128	129	132	137	134	136	139	144	140	141	**144**	149	145	146	149	154	151	153	156	161
	1350	MBh	37.9	38.4	39.5	41.2	37.6	38.1	39.2	40.9	36.6	37.1	38.2	39.9	35.0	35.5	36.6	38.2	33.0	33.5	34.6	36.2	31.1	31.6	32.7	34.4
		S/T	1.00	0.87	0.74	0.60	1.00	0.88	0.74	0.60	1.00	0.90	0.77	0.63	1.00	0.92	0.79	0.65	1.00	1.00	0.81	0.67	1.00	1.00	0.86	0.72
		ΔT	27	25	22	18	27	25	22	18	27	26	22	18	27	25	22	18	27	25	21	18	28	26	23	19
		kW	2.13	2.12	2.12	2.14	2.36	2.36	2.36	2.38	2.63	2.63	2.62	2.64	2.92	2.92	2.91	2.93	3.24	3.24	3.23	3.25	3.62	3.61	3.61	3.63
		Amps	7.7	7.7	7.7	7.8	8.8	8.8	8.8	8.9	10.0	10.0	10.0	10.1	11.3	11.3	11.3	11.4	12.8	12.8	12.8	12.9	14.5	14.5	14.5	14.6
		Hi PR	250	251	252	257	288	289	291	295	329	330	331	336	372	373	375	379	419	420	422	426	469	470	472	476
		Lo PR	123	124	127	132	130	131	134	139	136	138	141	146	141	143	146	151	147	148	151	156	153	155	158	163
85	1050	MBh	37.5	38.0	39.1	40.7	37.1	37.6	38.7	40.4	36.2	36.7	37.8	39.5	34.5	35.0	36.1	37.8	32.5	33.0	34.1	35.8	30.7	31.2	32.3	34.0
		S/T	1.00	0.88	0.74	0.60	1.00	0.89	0.75	0.61	1.00	1.00	0.78	0.63	1.00	1.00	0.80	0.65	1.00	1.00	0.82	0.68	1.00	1.00	0.87	0.73
		ΔT	33	31	28	24	33	31	28	24	33	32	28	24	33	31	28	24	33	31	27	24	34	32	29	25
		kW	2.11	2.11	2.10	2.12	2.35	2.34	2.34	2.36	2.61	2.61	2.61	2.62	2.90	2.90	2.89	2.91	3.22	3.22	3.22	3.23	3.60	3.60	3.59	3.61
		Amps	7.6	7.6	7.6	7.7	8.7	8.7	8.7	8.8	9.9	9.9	9.9	10.0	11.3	11.3	11.2	11.3	12.7	12.7	12.7	12.8	14.5	14.5	14.4	14.5
		Hi PR	247	248	249	254	285	286	288	292	326	327	329	333	369	370	372	376	416	417	419	423	466	468	469	473
		Lo PR	121	122	125	130	128	129	132	137	134	136	139	144	140	141	144	149	145	146	149	154	151	153	156	161
	1200	MBh	37.9	38.5	39.5	41.2	37.6	38.1	39.2	40.9	36.7	37.2	38.3	39.9	35.0	35.5	36.6	38.3	33.0	33.5	34.6	36.3	31.2	31.7	32.8	34.4
		S/T	1.00	0.94	0.80	0.66	1.00	0.95	0.81	0.67	1.00	1.00	0.84	0.69	1.00	1.00	0.85	0.71	1.00	1.00	0.88	0.73	1.00	1.00	0.93	0.79
		ΔT	32	30	27	23	32	30	26	23	32	30	27	23	32	30	26	23	32	30	26	22	33	31	27	24
		kW	2.12	2.12	2.11	2.13	2.36	2.36	2.35	2.37	2.62	2.62	2.62	2.64	2.91	2.91	2.91	2.92	3.23	3.23	3.23	3.25	3.61	3.61	3.60	3.62
		Amps	7.7	7.7	7.7	7.8	8.8	8.8	8.8	8.8	10.0	10.0	10.0	10.1	11.3	11.3	11.3	11.4	12.8	12.8	12.8	12.8	14.5	14.5	14.5	14.6
		Hi PR	249	250	251	256	287	288	290	294	328	329	331	335	371	372	374	378	418	419	421	425	469	470	471	476
		Lo PR	122	124	127	132	130	131	134	139	136	137	140	146	141	143	146	151	147	148	151	156	153	155	158	163
	1350	MBh	38.5	39.0	40.1	41.8	38.2	38.7	39.8	41.5	37.2	37.7	38.8	40.5	35.6	36.1	37.2	38.9	33.6	34.1	35.2	36.9	31.7	32.3	33.3	35.0
		S/T	1.00	0.97	0.84	0.70	1.00	0.98	0.84	0.70	1.00	1.00	0.87	0.73	1.00	1.00	0.89	0.75	1.00	1.00	0.91	0.77	1.00	1.00	1.00	0.82
		ΔT	31	29	26	22	31	29	25	22	31	29	26	22	31	29	25	22	31	29	25	21	32	30	26	23
		kW	2.13	2.13	2.12	2.14	2.37	2.37	2.36	2.38	2.63	2.63	2.63	2.65	2.92	2.92	2.92	2.93	3.24	3.24	3.24	3.26	3.62	3.62	3.61	3.63
		Amps	7.7	7.7	7.7	7.8	8.8	8.8	8.8	8.9	10.1	10.0	10.0	10.1	11.4	11.4	11.3	11.4	12.8	12.8	12.8	12.9	14.6	14.6	14.5	14.6
		Hi PR	251	252	254	258	289	290	292	296	330	331	333	337	373	374	376	380	420	421	423	427	471	472	473	478
		Lo PR	124	126	129	134	132	133	136	141	138	139	142	147	143	145	148	153	149	150	153	158	155	157	160	165

IDB: Entering Indoor Dry Bulb Temperature

Shaded area reflects AHRI conditions

Amps = outdoor unit amps (comp.+fan)

High and low pressures are measured at the liquid and suction service valves.

kW = Total system power

Expanded Cooling Data — GSX16[0/S/A]421**/CA*F4860*6D*+TXV

			Outdoor Ambient Temperature																							
			65ºF				75ºF				85ºF				95ºF				105ºF				115ºF			
			Entering Indoor Wet Bulb Temperature																							
IDB	Airflow		59	63	67	71	59	63	67	71	59	63	67	71	59	63	67	71	59	63	67	71	59	63	67	71
70	1225	MBh	36.9	38.2	41.9	-	36.0	37.3	40.9	-	35.2	36.4	39.9	-	34.3	35.6	39.0	-	32.6	33.8	37.0	-	30.2	31.3	34.3	-
		S/T	0.70	0.59	0.41	-	0.73	0.61	0.42	-	0.75	0.62	0.43	-	0.77	0.64	0.45	-	0.80	0.67	0.46	-	0.81	0.67	0.47	-
		ΔT	19	17	13	-	20	17	13	-	20	17	13	-	20	17	13	-	20	17	13	-	18	16	12	-
		kW	2.70	2.76	2.83	-	2.89	2.95	3.03	-	3.06	3.12	3.21	-	3.20	3.27	3.37	-	3.33	3.39	3.50	-	3.43	3.50	3.61	-
		Amps	9.9	10.1	10.4	-	10.7	10.9	11.3	-	11.6	11.8	12.2	-	12.3	12.6	13.1	-	13.1	13.4	13.9	-	13.9	14.2	14.7	-
		Hi PR	220	237	250	-	247	265	280	-	281	302	319	-	320	344	363	-	359	387	409	-	397	427	451	-
		Lo PR	102	109	119	-	108	115	125	-	112	119	130	-	118	125	137	-	124	131	143	-	128	136	148	-
	1400	MBh	40.0	41.4	45.4	-	39.0	40.5	44.3	-	38.1	39.5	43.3	-	37.2	38.5	42.2	-	35.3	36.6	40.1	-	32.7	33.9	37.1	-
		S/T	0.73	0.61	0.42	-	0.75	0.63	0.44	-	0.77	0.65	0.45	-	0.80	0.67	0.46	-	0.83	0.69	0.48	-	0.84	0.70	0.48	-
		ΔT	19	17	13	-	19	17	13	-	19	17	13	-	19	17	13	-	19	17	13	-	18	16	12	-
		kW	2.76	2.82	2.90	-	2.96	3.02	3.10	-	3.13	3.19	3.29	-	3.28	3.34	3.45	-	3.40	3.48	3.58	-	3.51	3.59	3.70	-
		Amps	10.1	10.4	10.7	-	10.9	11.2	11.6	-	11.9	12.2	12.6	-	12.7	13.0	13.4	-	13.5	13.8	14.3	-	14.3	14.6	15.1	-
		Hi PR	227	244	258	-	254	274	289	-	289	311	329	-	329	355	374	-	371	399	421	-	409	441	465	-
		Lo PR	105	112	122	-	111	118	129	-	116	123	134	-	122	129	141	-	127	135	148	-	132	140	153	-
	1575	MBh	41.2	42.7	46.7	-	40.2	41.7	45.7	-	39.2	40.7	44.6	-	38.3	39.7	43.5	-	36.4	37.7	41.3	-	33.7	34.9	38.3	-
		S/T	0.76	0.64	0.44	-	0.79	0.66	0.46	-	0.81	0.68	0.47	-	0.84	0.70	0.48	-	0.87	0.73	0.50	-	0.88	0.73	0.51	-
		ΔT	18	16	12	-	19	16	12	-	19	16	12	-	19	16	12	-	18	16	12	-	17	15	11	-
		kW	2.78	2.84	2.92	-	2.98	3.04	3.13	-	3.15	3.21	3.31	-	3.30	3.37	3.47	-	3.43	3.50	3.61	-	3.54	3.62	3.73	-
		Amps	10.2	10.5	10.8	-	11.0	11.3	11.7	-	12.0	12.3	12.7	-	12.8	13.1	13.6	-	13.6	14.0	14.4	-	14.4	14.8	15.3	-
		Hi PR	229	246	260	-	257	276	292	-	292	314	332	-	333	358	378	-	374	403	425	-	414	445	470	-
		Lo PR	106	113	124	-	112	120	131	-	117	124	136	-	123	131	143	-	129	137	149	-	133	142	155	-
75	1225	MBh	37.5	38.6	41.8	44.9	36.6	37.7	40.8	43.8	35.8	36.8	39.9	42.8	34.9	**35.9**	38.9	41.7	33.1	34.1	36.9	39.6	30.7	31.6	34.2	36.7
		S/T	0.80	0.71	0.54	0.35	0.83	0.74	0.56	0.36	0.85	0.76	0.57	0.37	0.88	**0.78**	0.59	0.38	0.91	0.81	0.62	0.40	0.92	0.82	0.62	0.40
		ΔT	22	21	17	12	23	21	17	12	23	21	17	12	23	**21**	17	12	23	21	17	12	21	19	16	11
		kW	2.72	2.78	2.86	2.94	2.91	2.97	3.06	3.15	3.08	3.14	3.23	3.33	3.23	**3.29**	3.39	3.50	3.35	3.42	3.53	3.64	3.46	3.53	3.64	3.76
		Amps	10.0	10.2	10.5	10.9	10.8	11.0	11.4	11.8	11.7	11.9	12.3	12.8	12.5	**12.8**	13.2	13.7	13.3	13.6	14.0	14.6	14.0	14.4	14.9	15.4
		Hi PR	222	239	252	263	249	268	283	295	283	305	322	336	323	**347**	367	383	363	391	413	430	401	432	456	476
		Lo PR	103	110	120	128	109	116	127	135	113	121	132	140	119	**127**	138	147	125	133	145	154	129	137	150	160
	1400	MBh	40.6	41.8	45.3	48.6	39.7	40.9	44.2	47.5	38.7	39.9	43.2	46.3	37.8	**38.9**	42.1	45.2	35.9	37.0	40.0	43.0	33.3	34.2	37.1	39.8
		S/T	0.83	0.74	0.56	0.36	0.86	0.77	0.58	0.37	0.88	0.79	0.60	0.38	0.91	**0.81**	0.61	0.40	0.94	0.84	0.64	0.41	0.95	0.85	0.64	0.41
		ΔT	22	20	17	12	22	21	17	12	22	21	17	12	23	**21**	17	12	22	20	17	12	21	19	16	11
		kW	2.78	2.84	2.92	3.01	2.98	3.04	3.13	3.22	3.15	3.21	3.31	3.41	3.30	**3.37**	3.47	3.58	3.43	3.50	3.61	3.72	3.54	3.62	3.73	3.85
		Amps	10.2	10.5	10.8	11.2	11.0	11.3	11.7	12.1	12.0	12.3	12.7	13.2	12.8	**13.1**	13.6	14.1	13.6	14.0	14.4	15.0	14.4	14.8	15.3	15.9
		Hi PR	229	246	260	271	257	276	292	305	292	314	332	346	333	**358**	378	394	374	403	425	444	414	445	470	490
		Lo PR	106	113	124	132	112	120	131	139	117	124	136	145	123	**131**	143	152	129	137	149	159	133	142	155	165
	1575	MBh	41.9	43.1	46.6	50.1	40.9	42.1	45.6	48.9	39.9	41.1	44.5	47.7	38.9	**40.1**	43.4	46.6	37.0	38.1	41.2	44.2	34.3	35.3	38.2	41.0
		S/T	0.87	0.78	0.59	0.38	0.90	0.80	0.61	0.39	0.92	0.82	0.62	0.40	0.95	**0.85**	0.64	0.41	0.99	0.88	0.67	0.43	1.00	0.89	0.67	0.43
		ΔT	21	20	16	11	21	20	16	11	21	20	16	11	22	**20**	16	11	21	20	16	11	20	18	15	10
		kW	2.80	2.86	2.94	3.03	3.00	3.06	3.15	3.25	3.17	3.24	3.34	3.44	3.33	**3.40**	3.50	3.61	3.46	3.53	3.64	3.75	3.57	3.65	3.76	3.88
		Amps	10.3	10.6	10.9	11.3	11.1	11.4	11.8	12.2	12.1	12.4	12.8	13.3	12.9	**13.2**	13.7	14.2	13.8	14.1	14.6	15.1	14.6	14.9	15.4	16.0
		Hi PR	231	249	263	274	259	279	295	308	295	318	335	350	336	**362**	382	398	378	407	430	448	418	450	475	495
		Lo PR	107	114	125	133	114	121	132	140	118	126	137	146	124	**132**	144	153	130	138	151	161	134	143	156	166

IDB: Entering Indoor Dry Bulb Temperature

Shaded area reflects ACCA (TVA) conditions

Amps = outdoor unit amps (comp.+fan)

High and low pressures are measured at the liquid and suction service valves.

kW = Total system power

Expanded Cooling Data — GSX16[0/S/A]421**/CA*F4860*6D*+TXV (cont.)

			Outdoor Ambient Temperature																							
			65ºF				75ºF				85ºF				95ºF				105ºF				115ºF			
			Entering Indoor Wet Bulb Temperature																							
IDB	Airflow		59	63	67	71	59	63	67	71	59	63	67	71	59	63	67	71	59	63	67	71	59	63	67	71
80	1225	MBh	38.2	39.0	41.7	44.5	37.3	38.1	40.7	43.5	36.4	37.2	39.7	42.5	35.5	36.3	38.8	41.4	33.7	34.5	36.8	39.4	31.2	31.9	34.1	36.5
		S/T	0.88	0.82	0.67	0.50	0.91	0.85	0.69	0.52	0.93	0.87	0.71	0.53	0.96	0.90	0.73	0.55	1.00	0.93	0.76	0.57	1.00	0.94	0.77	0.57
		ΔT	25	24	21	17	25	24	21	17	25	24	21	17	26	25	21	17	25	24	21	17	24	23	20	16
		kW	2.74	2.80	2.88	2.96	2.93	2.99	3.08	3.17	3.10	3.17	3.26	3.36	3.25	3.32	3.42	3.52	3.38	3.45	3.55	3.66	3.49	3.56	3.67	3.79
		Amps	10.0	10.3	10.6	11.0	10.8	11.1	11.5	11.9	11.8	12.1	12.5	12.9	12.6	12.9	13.3	13.8	13.4	13.7	14.2	14.7	14.2	14.5	15.0	15.6
		Hi PR	224	241	255	266	252	271	286	298	286	308	325	339	326	351	371	386	367	395	417	435	405	436	461	480
		Lo PR	104	111	121	129	110	117	128	136	114	122	133	142	120	128	140	149	126	134	146	156	130	139	151	161
	1400	MBh	41.4	42.3	45.2	48.3	40.4	41.3	44.1	47.1	39.4	40.3	43.1	46.0	38.5	39.3	**42.0**	44.9	36.5	37.3	39.9	42.7	33.9	34.6	37.0	39.5
		S/T	0.91	0.85	0.69	0.52	0.94	0.88	0.72	0.54	0.96	0.90	0.74	0.55	1.00	0.93	**0.76**	0.57	1.00	0.97	0.79	0.59	1.00	0.98	0.80	0.59
		ΔT	25	24	21	16	25	24	21	17	25	24	21	17	25	24	**21**	17	24	24	21	17	22	22	19	15
		kW	2.80	2.86	2.94	3.03	3.00	3.06	3.15	3.25	3.18	3.24	3.34	3.44	3.33	3.40	**3.50**	3.61	3.46	3.53	3.64	3.75	3.57	3.65	3.76	3.88
		Amps	10.3	10.6	10.9	11.3	11.1	11.4	11.8	12.2	12.1	12.4	12.8	13.3	12.9	13.2	**13.7**	14.2	13.8	14.1	14.6	15.1	14.6	14.9	15.4	16.0
		Hi PR	231	249	263	274	260	279	295	308	295	318	335	350	336	362	**382**	398	378	407	430	448	418	450	475	495
		Lo PR	107	114	125	133	114	121	132	140	118	126	137	146	124	132	**144**	153	130	138	151	161	134	143	156	166
	1575	MBh	42.6	43.5	46.5	49.7	41.6	42.5	45.4	48.6	40.6	41.5	44.3	47.4	39.6	40.5	43.3	46.2	37.6	38.5	41.1	43.9	34.9	35.6	38.1	40.7
		S/T	0.95	0.89	0.73	0.54	1.00	0.93	0.75	0.56	1.00	0.95	0.77	0.58	1.00	1.00	0.80	0.60	1.00	1.00	0.83	0.62	1.00	1.00	0.83	0.62
		ΔT	24	23	20	16	24	23	20	16	24	23	20	16	23	24	20	16	22	22	20	16	20	21	19	15
		kW	2.82	2.88	2.96	3.05	3.02	3.08	3.17	3.27	3.20	3.26	3.36	3.47	3.35	3.42	3.53	3.64	3.49	3.56	3.67	3.78	3.60	3.67	3.79	3.91
		Amps	10.4	10.7	11.0	11.4	11.2	11.5	11.9	12.3	12.2	12.5	12.9	13.4	13.0	13.4	13.8	14.3	13.9	14.2	14.7	15.2	14.7	15.1	15.6	16.2
		Hi PR	234	251	265	277	262	282	298	311	298	321	339	353	340	365	386	402	382	411	434	453	422	454	480	500
		Lo PR	109	116	126	134	115	122	133	142	119	127	138	147	125	133	145	155	131	140	152	162	136	144	158	168
85	1225	MBh	38.8	39.6	41.5	44.2	37.9	38.7	40.5	43.2	37.0	37.7	39.5	42.2	36.1	36.8	38.6	41.2	34.3	35.0	36.6	39.1	31.8	32.4	33.9	36.2
		S/T	0.92	0.89	0.80	0.65	0.95	0.92	0.83	0.67	0.98	0.94	0.85	0.69	1.00	0.97	0.88	0.71	1.00	1.00	0.91	0.74	1.00	1.00	0.92	0.74
		ΔT	27	26	25	22	27	27	25	22	27	27	25	22	27	27	25	22	26	26	25	22	24	24	23	20
		kW	2.76	2.82	2.90	2.98	2.96	3.01	3.10	3.20	3.13	3.19	3.28	3.38	3.28	3.34	3.44	3.55	3.40	3.47	3.58	3.69	3.51	3.59	3.70	3.82
		Amps	10.1	10.4	10.7	11.1	10.9	11.2	11.6	12.0	11.9	12.2	12.6	13.0	12.7	13.0	13.4	13.9	13.5	13.8	14.3	14.8	14.3	14.6	15.1	15.7
		Hi PR	227	244	257	269	254	274	289	301	289	311	329	343	329	354	374	390	371	399	421	439	409	441	465	485
		Lo PR	105	112	122	130	111	118	129	138	116	123	134	143	121	129	141	150	127	135	148	157	132	140	153	163
	1400	MBh	42.1	42.9	44.9	47.9	41.1	41.9	43.9	46.8	40.1	40.9	42.8	45.7	39.1	39.9	41.8	44.6	37.2	37.9	39.7	42.4	34.4	35.1	36.8	39.2
		S/T	0.95	0.92	0.83	0.67	0.99	0.95	0.86	0.70	1.00	0.98	0.88	0.71	1.00	1.00	0.91	0.74	1.00	1.00	0.94	0.77	1.00	1.00	0.95	0.77
		ΔT	26	26	24	21	27	26	25	21	26	26	25	21	26	26	25	22	24	25	25	21	23	23	23	20
		kW	2.82	2.88	2.96	3.05	3.02	3.08	3.17	3.27	3.20	3.26	3.36	3.47	3.35	3.42	3.53	3.64	3.49	3.56	3.67	3.78	3.60	3.67	3.79	3.91
		Amps	10.4	10.7	11.0	11.4	11.2	11.5	11.9	12.3	12.2	12.5	12.9	13.4	13.0	13.4	13.8	14.3	13.9	14.2	14.7	15.2	14.7	15.1	15.6	16.2
		Hi PR	234	251	265	277	262	282	298	311	298	321	339	353	340	365	386	402	382	411	434	453	422	454	480	500
		Lo PR	109	116	126	134	115	122	133	142	119	127	138	147	125	133	145	155	131	140	152	162	136	144	158	168
	1575	MBh	43.3	44.2	46.3	49.4	42.3	43.2	45.2	48.2	41.3	42.1	44.1	47.1	40.3	41.1	43.0	45.9	38.3	39.0	40.9	43.6	35.5	36.2	37.9	40.4
		S/T	1.00	0.96	0.87	0.70	1.00	1.00	0.90	0.73	1.00	1.00	0.92	0.75	1.00	1.00	0.95	0.77	1.00	1.00	0.99	0.80	1.00	1.00	1.00	0.81
		ΔT	25	25	23	20	25	25	24	21	24	25	24	21	24	24	24	21	22	23	24	20	21	21	22	19
		kW	2.85	2.90	2.98	3.07	3.05	3.11	3.20	3.30	3.22	3.29	3.39	3.49	3.38	3.45	3.55	3.67	3.51	3.59	3.70	3.81	3.63	3.70	3.82	3.94
		Amps	10.5	10.8	11.1	11.5	11.3	11.6	12.0	12.4	12.3	12.6	13.0	13.5	13.2	13.5	13.9	14.5	14.0	14.3	14.8	15.4	14.8	15.2	15.7	16.3
		Hi PR	236	254	268	280	265	285	301	314	301	324	342	357	343	369	390	406	386	415	438	457	426	459	484	505
		Lo PR	110	117	127	136	116	123	135	143	120	128	140	149	126	135	147	156	133	141	154	164	137	146	159	170

IDB: Entering Indoor Dry Bulb Temperature

Shaded area reflects AHRI conditions

Amps = outdoor unit amps (comp.+fan)

High and low pressures are measured at the liquid and suction service valves.

kW = Total system power

Expanded Cooling Data — GSX16[0/S/A]481**/CA*F4961*6D*+TXV

			Outdoor Ambient Temperature																							
			65ºF				75ºF				85ºF				95ºF				105ºF				115ºF			
			Entering Indoor Wet Bulb Temperature																							
IDB	Airflow		59	63	67	71	59	63	67	71	59	63	67	71	59	63	67	71	59	63	67	71	59	63	67	71
70	1400	MBh	42.6	44.2	48.4	-	41.6	43.2	47.3	-	40.7	42.1	46.2	-	39.7	41.1	45.0	-	37.7	39.1	42.8	-	34.9	36.2	39.6	-
		S/T	0.70	0.59	0.41	-	0.73	0.61	0.42	-	0.75	0.62	0.43	-	0.77	0.64	0.45	-	0.80	0.67	0.46	-	0.81	0.67	0.47	-
		ΔT	20	17	13	-	20	17	13	-	20	17	13	-	20	17	13	-	20	17	13	-	18	16	12	-
		kW	2.95	3.01	3.09	-	3.16	3.22	3.32	-	3.34	3.41	3.51	-	3.50	3.57	3.68	-	3.64	3.71	3.83	-	3.76	3.84	3.95	-
		Amps	10.8	11.0	11.4	-	11.7	11.9	12.3	-	12.7	13.0	13.4	-	13.5	13.9	14.3	-	14.4	14.7	15.2	-	15.3	15.6	16.2	-
		Hi PR	221	238	251	-	248	267	282	-	282	304	321	-	321	346	365	-	361	389	411	-	399	430	454	-
		Lo PR	105	112	122	-	111	118	129	-	115	123	134	-	121	129	141	-	127	135	147	-	131	140	152	-
	1500	MBh	43.3	44.9	49.2	-	42.3	43.8	48.0	-	41.3	42.8	46.9	-	40.3	41.7	45.7	-	38.3	39.6	43.4	-	35.4	36.7	40.2	-
		S/T	0.73	0.61	0.42	-	0.75	0.63	0.44	-	0.77	0.65	0.45	-	0.80	0.67	0.46	-	0.83	0.69	0.48	-	0.84	0.70	0.48	-
		ΔT	19	17	13	-	20	17	13	-	20	17	13	-	20	17	13	-	19	17	13	-	18	16	12	-
		kW	2.99	3.05	3.13	-	3.20	3.26	3.36	-	3.38	3.45	3.56	-	3.55	3.62	3.73	-	3.69	3.76	3.88	-	3.81	3.89	4.01	-
		Amps	11.0	11.2	11.6	-	11.8	12.1	12.5	-	12.9	13.2	13.6	-	13.7	14.1	14.5	-	14.6	15.0	15.5	-	15.5	15.9	16.4	-
		Hi PR	225	242	256	-	252	272	287	-	287	309	326	-	327	352	371	-	368	396	418	-	406	437	462	-
		Lo PR	107	114	124	-	113	120	131	-	117	125	136	-	123	131	143	-	129	137	150	-	134	142	155	-
	1800	MBh	44.8	46.4	50.9	-	43.8	45.4	49.7	-	42.7	44.3	48.5	-	41.7	43.2	47.3	-	39.6	41.0	45.0	-	36.7	38.0	41.6	-
		S/T	0.77	0.65	0.45	-	0.80	0.67	0.46	-	0.82	0.69	0.48	-	0.85	0.71	0.49	-	0.88	0.74	0.51	-	0.89	0.74	0.51	-
		ΔT	18	15	12	-	18	16	12	-	18	16	12	-	18	16	12	-	18	15	12	-	17	14	11	-
		kW	3.03	3.09	3.18	-	3.25	3.31	3.41	-	3.44	3.51	3.61	-	3.60	3.68	3.79	-	3.75	3.82	3.94	-	3.87	3.95	4.07	-
		Amps	11.2	11.4	11.8	-	12.1	12.3	12.8	-	13.1	13.4	13.9	-	14.0	14.3	14.8	-	14.9	15.3	15.8	-	15.8	16.2	16.7	-
		Hi PR	229	247	261	-	257	277	292	-	293	315	333	-	333	359	379	-	375	404	426	-	414	446	471	-
		Lo PR	109	116	127	-	115	122	134	-	120	127	139	-	126	134	146	-	132	140	153	-	136	145	158	-
75	1400	MBh	43.4	44.6	48.3	51.9	42.4	43.6	47.2	50.7	41.3	42.6	46.1	49.5	40.3	**41.5**	45.0	48.2	38.3	39.5	42.7	45.8	35.5	36.5	39.6	42.5
		S/T	0.80	0.71	0.54	0.35	0.83	0.74	0.56	0.36	0.85	0.76	0.57	0.37	0.88	**0.78**	0.59	0.38	0.91	0.81	0.62	0.40	0.92	0.82	0.62	0.40
		ΔT	23	21	17	12	23	21	17	12	23	21	17	12	23	**21**	17	12	23	21	17	12	21	20	16	11
		kW	2.97	3.03	3.12	3.21	3.18	3.25	3.34	3.44	3.37	3.43	3.54	3.65	3.53	**3.60**	3.71	3.83	3.67	3.74	3.86	3.98	3.79	3.87	3.99	4.11
		Amps	10.9	11.2	11.5	11.9	11.8	12.0	12.4	12.9	12.8	13.1	13.5	14.0	13.7	**14.0**	14.5	15.0	14.5	14.9	15.4	16.0	15.4	15.8	16.3	16.9
		Hi PR	223	240	254	265	251	270	285	297	285	307	324	338	325	**349**	369	385	365	393	415	433	403	434	458	478
		Lo PR	106	113	123	131	112	119	130	139	116	124	135	144	122	**130**	142	151	128	136	149	159	133	141	154	164
	1500	MBh	44.0	45.3	49.1	52.7	43.0	44.3	47.9	51.4	42.0	43.2	46.8	50.2	41.0	**42.2**	45.6	49.0	38.9	40.1	43.4	46.5	36.0	37.1	40.2	43.1
		S/T	0.83	0.74	0.56	0.36	0.86	0.77	0.58	0.37	0.88	0.79	0.60	0.38	0.91	**0.81**	0.61	0.40	0.94	0.84	0.64	0.41	0.95	0.85	0.64	0.41
		ΔT	22	21	17	12	23	21	17	12	23	21	17	12	23	**21**	17	12	22	21	17	12	21	19	16	11
		kW	3.01	3.07	3.16	3.25	3.22	3.29	3.38	3.49	3.41	3.48	3.59	3.70	3.58	**3.65**	3.76	3.88	3.72	3.79	3.91	4.04	3.84	3.92	4.04	4.17
		Amps	11.1	11.3	11.7	12.1	12.0	12.2	12.6	13.1	13.0	13.3	13.7	14.3	13.9	**14.2**	14.7	15.2	14.8	15.1	15.6	16.2	15.6	16.0	16.6	17.2
		Hi PR	227	244	258	269	255	274	290	302	290	312	329	344	330	**355**	375	391	371	400	422	440	410	442	466	486
		Lo PR	108	115	125	133	114	121	132	141	118	126	138	147	124	**132**	145	154	130	139	151	161	135	144	157	167
	1800	MBh	45.6	46.9	50.8	54.5	44.5	45.8	49.6	53.2	43.4	44.7	48.4	52.0	42.4	**43.6**	47.2	50.7	40.3	41.5	44.9	48.2	37.3	38.4	41.6	44.6
		S/T	0.88	0.79	0.60	0.38	0.91	0.82	0.62	0.40	0.93	0.84	0.63	0.41	0.96	**0.86**	0.65	0.42	1.00	0.90	0.68	0.44	1.00	0.90	0.68	0.44
		ΔT	20	19	15	11	21	19	16	11	21	19	16	11	21	**19**	16	11	21	19	16	11	19	18	15	10
		kW	3.05	3.11	3.20	3.30	3.27	3.34	3.44	3.54	3.46	3.53	3.64	3.75	3.63	**3.71**	3.82	3.94	3.78	3.85	3.97	4.10	3.90	3.98	4.11	4.24
		Amps	11.3	11.5	11.9	12.3	12.2	12.5	12.9	13.4	13.2	13.5	14.0	14.5	14.1	**14.5**	15.0	15.5	15.0	15.4	15.9	16.5	15.9	16.3	16.9	17.5
		Hi PR	232	249	263	275	260	280	295	308	296	318	336	350	337	**362**	383	399	379	408	431	449	419	451	476	496
		Lo PR	110	117	128	136	116	124	135	144	121	129	140	149	127	**135**	147	157	133	142	155	165	138	146	160	170

IDB: Entering Indoor Dry Bulb Temperature

Shaded area reflects ACCA (TVA) conditions

Amps = outdoor unit amps (comp.+fan)

High and low pressures are measured at the liquid and suction service valves.

kW = Total system power

Expanded Cooling Data — GSX16[0/S/A]481**/CA*F4961*6D*+TXV (cont.)

			Outdoor Ambient Temperature																							
			65ºF				75ºF				85ºF				95ºF				105ºF				115ºF			
			Entering Indoor Wet Bulb Temperature																							
IDB	Airflow		59	63	67	71	59	63	67	71	59	63	67	71	59	63	67	71	59	63	67	71	59	63	67	71
80	1400	MBh	44.1	45.1	48.2	51.5	43.1	44.0	47.1	50.3	42.1	43.0	45.9	49.1	41.1	41.9	44.8	47.9	39.0	39.9	42.6	45.5	36.1	36.9	39.4	42.2
		S/T	0.88	0.82	0.67	0.50	0.91	0.85	0.69	0.52	0.93	0.87	0.71	0.53	0.96	0.90	0.73	0.55	1.00	0.93	0.76	0.57	1.00	0.94	0.77	0.57
		ΔT	25	24	21	17	26	25	21	17	26	25	21	17	26	25	22	17	26	24	21	17	24	23	20	16
		kW	2.99	3.05	3.14	3.23	3.21	3.27	3.37	3.47	3.39	3.46	3.57	3.68	3.56	3.63	3.74	3.86	3.70	3.77	3.89	4.01	3.82	3.90	4.02	4.15
		Amps	11.0	11.3	11.6	12.0	11.9	12.2	12.6	13.0	12.9	13.2	13.6	14.2	13.8	14.1	14.6	15.1	14.7	15.0	15.5	16.1	15.5	15.9	16.5	17.1
		Hi PR	226	243	256	267	253	272	288	300	288	310	327	341	328	353	373	389	369	397	419	437	408	439	463	483
		Lo PR	107	114	124	133	113	120	131	140	118	125	137	146	124	131	144	153	130	138	150	160	134	143	156	166
	1500	MBh	44.8	45.8	48.9	52.3	43.8	44.7	47.8	51.1	42.7	43.7	46.6	49.9	41.7	42.6	**45.5**	48.6	39.6	40.5	43.2	46.2	36.7	37.5	40.0	42.8
		S/T	0.91	0.85	0.69	0.52	0.94	0.88	0.72	0.54	0.96	0.90	0.74	0.55	1.00	0.93	**0.76**	0.57	1.00	0.97	0.79	0.59	1.00	0.98	0.80	0.59
		ΔT	25	24	21	17	25	24	21	17	25	24	21	17	25	24	**21**	17	24	24	21	17	22	22	20	16
		kW	3.03	3.09	3.18	3.28	3.25	3.31	3.41	3.51	3.44	3.51	3.61	3.73	3.60	3.68	**3.79**	3.91	3.75	3.82	3.94	4.07	3.87	3.95	4.07	4.20
		Amps	11.2	11.4	11.8	12.2	12.1	12.4	12.8	13.2	13.1	13.4	13.9	14.4	14.0	14.3	**14.8**	15.4	14.9	15.3	15.8	16.4	15.8	16.2	16.7	17.4
		Hi PR	229	247	261	272	257	277	293	305	293	315	333	347	334	359	**379**	395	375	404	426	445	415	446	471	491
		Lo PR	109	116	127	135	115	123	134	142	120	127	139	148	126	134	**146**	155	132	140	153	163	136	145	158	169
	1800	MBh	46.4	47.4	50.6	54.1	45.3	46.3	49.4	52.9	44.2	45.2	48.3	51.6	43.1	44.1	47.1	50.3	41.0	41.9	44.7	47.8	38.0	38.8	41.4	44.3
		S/T	0.96	0.90	0.74	0.55	1.00	0.94	0.76	0.57	1.00	0.96	0.78	0.58	1.00	1.00	0.81	0.60	1.00	1.00	0.84	0.63	1.00	1.00	0.85	0.63
		ΔT	23	22	19	15	23	22	19	15	23	22	19	15	22	23	19	16	21	21	19	15	19	20	18	14
		kW	3.08	3.14	3.23	3.33	3.30	3.36	3.46	3.57	3.49	3.56	3.67	3.78	3.66	3.74	3.85	3.97	3.81	3.88	4.01	4.13	3.93	4.01	4.14	4.27
		Amps	11.4	11.6	12.0	12.5	12.3	12.6	13.0	13.5	13.3	13.7	14.1	14.7	14.3	14.6	15.1	15.7	15.2	15.5	16.1	16.7	16.1	16.5	17.0	17.7
		Hi PR	234	252	266	277	263	283	298	311	299	321	339	354	340	366	387	403	383	412	435	454	423	455	481	501
		Lo PR	111	118	129	138	117	125	136	145	122	130	142	151	128	136	149	159	134	143	156	166	139	148	161	172
85	1400	MBh	44.9	45.8	47.9	51.1	43.9	44.7	46.8	50.0	42.8	43.6	45.7	48.8	41.8	42.6	44.6	47.6	39.7	40.4	42.4	45.2	36.8	37.5	39.2	41.9
		S/T	0.92	0.89	0.80	0.65	0.95	0.92	0.83	0.67	0.98	0.94	0.85	0.69	1.00	0.97	0.88	0.71	1.00	1.00	0.91	0.74	1.00	1.00	0.92	0.74
		ΔT	27	27	25	22	27	27	25	22	27	27	25	22	27	27	26	22	26	27	25	22	24	25	24	20
		kW	3.02	3.08	3.16	3.26	3.23	3.29	3.39	3.50	3.42	3.49	3.59	3.70	3.58	3.66	3.77	3.89	3.73	3.80	3.92	4.05	3.85	3.93	4.05	4.18
		Amps	11.1	11.4	11.7	12.2	12.0	12.3	12.7	13.1	13.0	13.3	13.8	14.3	13.9	14.2	14.7	15.3	14.8	15.2	15.7	16.3	15.7	16.1	16.6	17.2
		Hi PR	228	245	259	270	256	275	290	303	291	313	330	345	331	356	376	392	373	401	423	442	412	443	468	488
		Lo PR	108	115	126	134	114	122	133	141	119	126	138	147	125	133	145	154	131	139	152	162	135	144	157	167
	1500	MBh	45.6	46.5	48.7	51.9	44.5	45.4	47.5	50.7	43.5	44.3	46.4	49.5	42.4	43.2	45.3	48.3	40.3	41.1	43.0	45.9	37.3	38.0	39.8	42.5
		S/T	0.95	0.92	0.83	0.67	0.99	0.95	0.86	0.70	1.00	0.98	0.88	0.71	1.00	1.00	0.91	0.74	1.00	1.00	0.94	0.77	1.00	1.00	0.95	0.77
		ΔT	27	26	25	21	27	26	25	22	27	26	25	22	26	26	25	22	25	25	25	22	23	23	23	20
		kW	3.05	3.11	3.21	3.30	3.27	3.34	3.44	3.54	3.46	3.53	3.64	3.75	3.63	3.71	3.82	3.94	3.78	3.85	3.97	4.10	3.90	3.98	4.11	4.24
		Amps	11.3	11.5	11.9	12.3	12.2	12.5	12.9	13.4	13.2	13.5	14.0	14.5	14.1	14.5	15.0	15.5	15.0	15.4	15.9	16.5	15.9	16.3	16.9	17.5
		Hi PR	232	249	263	275	260	280	296	308	296	318	336	351	337	363	383	399	379	408	431	449	419	451	476	496
		Lo PR	110	117	128	136	116	124	135	144	121	129	140	150	127	135	147	157	133	142	155	165	138	146	160	170
	1800	MBh	47.2	48.1	50.4	53.7	46.1	47.0	49.2	52.5	45.0	45.9	48.0	51.2	43.9	44.7	46.9	50.0	41.7	42.5	44.5	47.5	38.6	39.4	41.2	44.0
		S/T	1.00	0.98	0.88	0.71	1.00	1.00	0.91	0.74	1.00	1.00	0.94	0.76	1.00	1.00	0.97	0.78	1.00	1.00	1.00	0.81	1.00	1.00	1.00	0.82
		ΔT	24	24	23	20	24	24	23	20	23	23	23	20	22	23	23	20	21	22	23	20	20	20	21	18
		kW	3.10	3.16	3.25	3.35	3.32	3.39	3.49	3.60	3.52	3.59	3.70	3.81	3.69	3.77	3.88	4.00	3.83	3.92	4.04	4.17	3.96	4.05	4.17	4.31
		Amps	11.5	11.7	12.1	12.6	12.4	12.7	13.1	13.6	13.5	13.8	14.2	14.8	14.4	14.7	15.2	15.8	15.3	15.7	16.2	16.8	16.2	16.6	17.2	17.9
		Hi PR	236	254	269	280	265	285	301	314	302	325	343	358	344	370	390	407	387	416	439	458	427	460	485	506
		Lo PR	112	119	130	139	119	126	138	147	123	131	143	152	130	138	150	160	136	144	158	168	140	149	163	174

IDB: Entering Indoor Dry Bulb Temperature

High and low pressures are measured at the liquid and suction service valves.

Shaded area reflects AHRI conditions

Amps = outdoor unit amps (comp.+fan)

kW = Total system power

Expanded Cooling Data — GSX16[0/A]601**/CA*F4961*6D*+TXV

			Outdoor Ambient Temperature																							
			65ºF				75ºF				85ºF				95ºF				105ºF				115ºF			
			Entering Indoor Wet Bulb Temperature																							
IDB	Airflow		59	63	67	71	59	63	67	71	59	63	67	71	59	63	67	71	59	63	67	71	59	63	67	71
70	1750	MBh	51.9	53.8	58.9	-	50.7	52.5	57.6	-	49.5	51.3	56.2	-	48.3	50.0	54.8	-	45.9	47.5	52.1	-	42.5	44.0	48.2	-
		S/T	0.74	0.62	0.43	-	0.77	0.64	0.45	-	0.79	0.66	0.46	-	0.81	0.68	0.47	-	0.85	0.71	0.49	-	0.85	0.71	0.49	-
		ΔT	20	18	13	-	20	18	13	-	21	18	13	-	21	18	14	-	20	18	13	-	19	16	12	-
		kW	3.55	3.62	3.73	-	3.80	3.88	3.99	-	4.03	4.11	4.23	-	4.22	4.31	4.44	-	4.39	4.48	4.62	-	4.53	4.63	4.77	-
		Amps	13.2	13.5	14.0	-	14.3	14.6	15.1	-	15.5	15.9	16.4	-	16.6	17.0	17.5	-	17.6	18.0	18.6	-	18.6	19.1	19.7	-
		Hi PR	217	233	246	-	243	262	276	-	276	297	314	-	315	339	358	-	354	381	403	-	391	421	445	-
		Lo PR	103	109	119	-	109	115	126	-	113	120	131	-	118	126	138	-	124	132	144	-	128	137	149	-
	1625	MBh	51.4	53.2	58.3	-	50.2	52.0	57.0	-	49.0	50.8	55.6	-	47.8	49.5	54.3	-	45.4	47.1	51.6	-	42.1	43.6	47.8	-
		S/T	0.73	0.61	0.42	-	0.75	0.63	0.44	-	0.77	0.65	0.45	-	0.80	0.67	0.46	-	0.83	0.69	0.48	-	0.84	0.70	0.48	-
		ΔT	21	18	14	-	21	19	14	-	21	19	14	-	22	19	14	-	21	18	14	-	20	17	13	-
		kW	3.55	3.61	3.72	-	3.80	3.87	3.99	-	4.02	4.10	4.22	-	4.21	4.30	4.43	-	4.38	4.47	4.61	-	4.52	4.61	4.76	-
		Amps	13.2	13.5	13.9	-	14.2	14.6	15.1	-	15.5	15.8	16.3	-	16.5	16.9	17.5	-	17.6	18.0	18.6	-	18.6	19.0	19.7	-
		Hi PR	216	232	245	-	242	261	275	-	276	297	313	-	314	338	357	-	353	380	401	-	390	420	443	-
		Lo PR	102	109	119	-	108	115	126	-	112	120	131	-	118	126	137	-	124	132	144	-	128	136	149	-
	2250	MBh	53.2	55.1	60.4	-	51.9	53.8	59.0	-	50.7	52.5	57.6	-	49.5	51.3	56.2	-	47.0	48.7	53.4	-	43.5	45.1	49.4	-
		S/T	0.77	0.65	0.45	-	0.80	0.67	0.46	-	0.82	0.69	0.48	-	0.85	0.71	0.49	-	0.88	0.74	0.51	-	0.89	0.74	0.51	-
		ΔT	17	15	11	-	17	15	11	-	17	15	11	-	17	15	11	-	17	15	11	-	16	14	10	-
		kW	3.60	3.67	3.77	-	3.85	3.93	4.05	-	4.08	4.16	4.29	-	4.28	4.36	4.50	-	4.44	4.54	4.68	-	4.59	4.69	4.83	-
		Amps	13.4	13.7	14.2	-	14.5	14.8	15.3	-	15.7	16.1	16.6	-	16.8	17.2	17.8	-	17.9	18.3	18.9	-	18.9	19.4	20.0	-
		Hi PR	220	237	250	-	247	266	281	-	281	303	319	-	320	345	364	-	360	388	409	-	398	428	452	-
		Lo PR	104	111	121	-	110	117	128	-	115	122	133	-	120	128	140	-	126	134	147	-	131	139	152	-
75	1750	MBh	52.8	54.3	58.8	63.1	51.5	53.1	57.4	61.6	50.3	51.8	56.1	60.2	49.1	**50.5**	54.7	58.7	46.6	48.0	52.0	55.8	43.2	44.5	48.1	51.7
		S/T	0.84	0.75	0.57	0.37	0.87	0.78	0.59	0.38	0.90	0.80	0.61	0.39	0.93	**0.83**	0.63	0.40	0.96	0.86	0.65	0.42	0.97	0.87	0.66	0.42
		ΔT	23	22	18	12	24	22	18	12	24	22	18	12	24	**22**	18	12	24	22	18	12	22	20	17	11
		kW	3.58	3.65	3.76	3.87	3.83	3.91	4.03	4.15	4.06	4.14	4.26	4.40	4.25	**4.34**	4.48	4.62	4.42	4.51	4.65	4.80	4.57	4.66	4.81	4.96
		Amps	13.4	13.7	14.1	14.6	14.4	14.8	15.2	15.8	15.6	16.0	16.5	17.2	16.7	**17.1**	17.7	18.3	17.8	18.2	18.8	19.5	18.8	19.3	19.9	20.7
		Hi PR	219	235	249	259	246	264	279	291	279	301	317	331	318	**342**	361	377	358	385	407	424	395	425	449	469
		Lo PR	104	110	121	128	110	117	127	136	114	121	132	141	120	**127**	139	148	125	133	146	155	130	138	151	160
	1625	MBh	52.2	53.8	58.2	62.5	51.0	52.5	56.9	61.0	49.8	51.3	55.5	59.6	48.6	**50.0**	54.2	58.1	46.2	47.5	51.5	55.2	42.8	44.0	47.7	51.2
		S/T	0.83	0.74	0.56	0.36	0.86	0.77	0.58	0.37	0.88	0.79	0.60	0.38	0.91	**0.81**	0.61	0.40	0.94	0.84	0.64	0.41	0.95	0.85	0.64	0.41
		ΔT	24	23	18	13	25	23	19	13	25	23	19	13	25	**23**	19	13	25	23	19	13	23	21	17	12
		kW	3.57	3.64	3.75	3.86	3.82	3.90	4.02	4.14	4.05	4.13	4.25	4.39	4.24	**4.33**	4.46	4.60	4.41	4.50	4.64	4.79	4.56	4.65	4.80	4.95
		Amps	13.3	13.6	14.1	14.6	14.4	14.7	15.2	15.8	15.6	16.0	16.5	17.1	16.7	**17.1**	17.6	18.3	17.7	18.2	18.8	19.5	18.8	19.2	19.9	20.6
		Hi PR	218	235	248	259	245	263	278	290	278	300	316	330	317	**341**	360	376	357	384	405	423	394	424	448	467
		Lo PR	103	110	120	128	109	116	127	135	114	121	132	141	119	**127**	139	148	125	133	145	155	129	138	150	160
	2250	MBh	54.1	55.7	60.3	64.7	52.8	54.4	58.9	63.2	51.6	53.1	57.5	61.7	50.3	**51.8**	56.1	60.2	47.8	49.2	53.3	57.2	44.3	45.6	49.3	52.9
		S/T	0.88	0.79	0.60	0.38	0.91	0.82	0.62	0.40	0.93	0.84	0.63	0.41	0.96	**0.86**	0.65	0.42	1.00	0.90	0.68	0.44	1.00	0.90	0.68	0.44
		ΔT	19	18	15	10	20	18	15	10	20	18	15	10	20	**18**	15	10	20	18	15	10	18	17	14	10
		kW	3.62	3.69	3.80	3.92	3.88	3.96	4.08	4.20	4.11	4.19	4.32	4.45	4.31	**4.40**	4.53	4.68	4.48	4.57	4.72	4.87	4.63	4.73	4.87	5.03
		Amps	13.6	13.9	14.3	14.8	14.6	15.0	15.5	16.0	15.9	16.3	16.8	17.4	17.0	**17.4**	17.9	18.6	18.0	18.5	19.1	19.8	19.1	19.6	20.2	21.0
		Hi PR	223	239	253	264	250	269	284	296	284	306	323	337	323	**348**	368	383	364	392	414	431	402	433	457	477
		Lo PR	106	112	123	131	111	119	129	138	116	123	135	143	122	**129**	141	151	128	136	148	158	132	140	153	163

IDB: Entering Indoor Dry Bulb Temperature

Shaded area reflects ACCA (TVA) conditions

Amps = outdoor unit amps (comp.+fan)

High and low pressures are measured at the liquid and suction service valves.

kW = Total system power

Expanded Cooling Data — GSX16[0/A]601**/CA*F4961*6D*+TXV (cont.)

			Outdoor Ambient Temperature																							
			65ºF				75ºF				85ºF				95ºF				105ºF				115ºF			
			Entering Indoor Wet Bulb Temperature																							
IDB	Airflow		59	63	67	71	59	63	67	71	59	63	67	71	59	63	67	71	59	63	67	71	59	63	67	71
80	1750	MBh	53.7	54.9	58.6	62.7	52.5	53.6	57.3	61.2	51.2	52.3	55.9	59.8	50.0	51.0	54.5	58.3	47.5	48.5	51.8	55.4	44.0	44.9	48.0	51.3
		S/T	0.93	0.87	0.71	0.53	0.96	0.90	0.73	0.55	0.98	0.92	0.75	0.56	1.00	0.95	0.78	0.58	1.00	0.99	0.80	0.60	1.00	1.00	0.81	0.61
		ΔT	26	25	22	17	26	25	22	18	26	25	22	18	26	26	22	18	25	25	22	17	23	24	20	16
		kW	3.61	3.68	3.78	3.90	3.86	3.94	4.06	4.18	4.09	4.17	4.30	4.43	4.29	4.38	4.51	4.65	4.46	4.55	4.69	4.84	4.60	4.70	4.85	5.00
		Amps	13.5	13.8	14.2	14.8	14.5	14.9	15.4	15.9	15.8	16.2	16.7	17.3	16.9	17.3	17.8	18.5	17.9	18.4	19.0	19.7	19.0	19.5	20.1	20.9
		Hi PR	221	238	251	262	248	267	282	294	282	304	321	334	321	346	365	381	361	389	411	428	399	430	454	473
		Lo PR	105	112	122	130	111	118	129	137	115	122	134	142	121	129	140	150	127	135	147	157	131	139	152	162
	1625	MBh	53.2	54.3	58.1	62.1	51.9	53.1	56.7	60.6	50.7	51.8	55.4	59.2	49.5	50.5	**54.0**	57.7	47.0	48.0	51.3	54.8	43.5	44.5	47.5	50.8
		S/T	0.91	0.85	0.69	0.52	0.94	0.88	0.72	0.54	0.96	0.90	0.74	0.55	1.00	0.93	**0.76**	0.57	1.00	0.97	0.79	0.59	1.00	0.98	0.80	0.59
		ΔT	27	26	23	18	28	26	23	18	28	27	23	18	28	27	**23**	19	27	26	23	18	25	25	21	17
		kW	3.60	3.67	3.77	3.89	3.85	3.93	4.05	4.17	4.08	4.16	4.29	4.42	4.28	4.37	**4.50**	4.64	4.45	4.54	4.68	4.83	4.59	4.69	4.84	4.99
		Amps	13.4	13.8	14.2	14.7	14.5	14.8	15.3	15.9	15.7	16.1	16.7	17.3	16.8	17.2	**17.8**	18.5	17.9	18.3	18.9	19.6	18.9	19.4	20.1	20.8
		Hi PR	220	237	250	261	247	266	281	293	281	303	320	333	320	345	**364**	380	360	388	410	427	398	428	452	472
		Lo PR	105	111	121	129	110	117	128	137	115	122	133	142	121	128	**140**	149	126	134	147	156	131	139	152	162
	2250	MBh	55.0	56.2	60.1	64.2	53.8	54.9	58.7	62.7	52.5	53.6	57.3	61.2	51.2	52.3	55.9	59.7	48.6	49.7	53.1	56.8	45.1	46.0	49.2	52.6
		S/T	0.96	0.90	0.74	0.55	1.00	0.94	0.76	0.57	1.00	0.96	0.78	0.58	1.00	1.00	0.81	0.60	1.00	1.00	0.84	0.63	1.00	1.00	0.85	0.63
		ΔT	22	21	18	14	22	21	18	15	21	21	18	15	21	21	18	15	20	20	18	15	18	19	17	14
		kW	3.65	3.72	3.83	3.95	3.91	3.99	4.11	4.23	4.14	4.23	4.35	4.49	4.34	4.43	4.57	4.72	4.52	4.61	4.75	4.91	4.66	4.76	4.91	5.07
		Amps	13.7	14.0	14.4	15.0	14.8	15.1	15.6	16.2	16.0	16.4	17.0	17.6	17.1	17.5	18.1	18.8	18.2	18.7	19.3	20.0	19.3	19.8	20.4	21.2
		Hi PR	225	242	255	266	252	271	287	299	287	309	326	340	327	352	371	387	368	396	418	436	406	437	462	481
		Lo PR	107	113	124	132	113	120	131	139	117	125	136	145	123	131	143	152	129	137	150	159	133	142	155	165
85	1750	MBh	54.6	55.7	58.3	62.2	53.4	54.4	57.0	60.8	52.1	53.1	55.6	59.3	50.8	51.8	54.3	57.9	48.3	49.2	51.6	55.0	44.7	45.6	47.8	50.9
		S/T	0.97	0.94	0.85	0.69	1.00	0.97	0.88	0.71	1.00	1.00	0.90	0.73	1.00	1.00	0.93	0.75	1.00	1.00	0.96	0.78	1.00	1.00	0.97	0.79
		ΔT	28	27	26	22	28	28	26	23	27	28	26	23	27	27	26	23	25	26	26	23	23	24	24	21
		kW	3.63	3.70	3.81	3.93	3.89	3.97	4.09	4.21	4.12	4.20	4.33	4.47	4.32	4.41	4.55	4.69	4.49	4.59	4.73	4.88	4.64	4.74	4.89	5.04
		Amps	13.6	13.9	14.4	14.9	14.7	15.0	15.5	16.1	15.9	16.3	16.8	17.5	17.0	17.4	18.0	18.7	18.1	18.5	19.2	19.9	19.2	19.6	20.3	21.1
		Hi PR	223	240	254	265	251	270	285	297	285	307	324	338	324	349	369	385	365	393	415	433	403	434	458	478
		Lo PR	106	113	123	131	112	119	130	138	116	124	135	144	122	130	142	151	128	136	149	158	132	141	154	164
	1625	MBh	54.1	55.1	57.8	61.6	52.8	53.9	56.4	60.2	51.6	52.6	55.1	58.8	50.3	51.3	53.7	57.3	47.8	48.7	51.0	54.5	44.3	45.1	47.3	50.4
		S/T	0.95	0.92	0.83	0.67	0.99	0.95	0.86	0.70	1.00	0.98	0.88	0.71	1.00	1.00	0.91	0.74	1.00	1.00	0.94	0.77	1.00	1.00	0.95	0.77
		ΔT	29	29	27	23	29	29	27	24	29	29	27	24	28	29	28	24	27	28	27	24	25	26	25	22
		kW	3.62	3.70	3.80	3.92	3.88	3.96	4.08	4.20	4.11	4.19	4.32	4.46	4.31	4.40	4.54	4.68	4.48	4.57	4.72	4.87	4.63	4.73	4.87	5.03
		Amps	13.6	13.9	14.3	14.8	14.6	15.0	15.5	16.0	15.9	16.3	16.8	17.4	17.0	17.4	18.0	18.6	18.0	18.5	19.1	19.8	19.1	19.6	20.2	21.0
		Hi PR	223	240	253	264	250	269	284	296	284	306	323	337	324	348	368	383	364	392	414	431	402	433	457	477
		Lo PR	106	112	123	131	112	119	130	138	116	123	135	143	122	130	141	151	128	136	148	158	132	140	153	163
	2250	MBh	56.0	57.1	59.8	63.8	54.7	55.8	58.4	62.3	53.4	54.4	57.0	60.8	52.1	53.1	55.6	59.3	49.5	50.4	52.8	56.4	45.8	46.7	48.9	52.2
		S/T	1.00	0.98	0.88	0.71	1.00	1.00	0.91	0.74	1.00	1.00	0.94	0.76	1.00	1.00	0.97	0.78	1.00	1.00	1.00	0.81	1.00	1.00	1.00	0.82
		ΔT	23	23	22	19	22	23	22	19	22	22	22	19	21	22	22	19	20	21	22	19	19	19	20	17
		kW	3.68	3.75	3.86	3.98	3.94	4.02	4.14	4.27	4.17	4.26	4.39	4.53	4.38	4.47	4.61	4.75	4.55	4.65	4.79	4.95	4.70	4.80	4.95	5.11
		Amps	13.8	14.1	14.6	15.1	14.9	15.3	15.8	16.3	16.2	16.6	17.1	17.7	17.3	17.7	18.3	19.0	18.4	18.8	19.5	20.2	19.5	19.9	20.6	21.4
		Hi PR	227	244	258	269	255	274	289	302	290	312	329	343	330	355	375	391	371	400	422	440	410	441	466	486
		Lo PR	108	115	125	133	114	121	132	141	118	126	137	146	124	132	144	154	130	138	151	161	135	143	156	167

IDB: Entering Indoor Dry Bulb Temperature

Shaded area reflects AHRI conditions

Amps = outdoor unit amps (comp.+fan)

High and low pressures are measured at the liquid and suction service valves.

kW = Total system power

ECN	REV	ZONE	DESCRIPTION	CHK	DR	DATE
XXXXXXX	A	XXXXX	INITIAL RELEASE		-	

MODEL	DIMENSIONS		
	W"	D"	H"
GSX160181**	29	29	32
GSX160241**	29	29	32
GSX160301**	29	29	35¾
GSX160311**	29	29	39½
GSX160361**	29	29	39½
GSX160371**	35½	35½	35¾
GSX160421**	35½	35½	35¾
GSX160481**	35½	35½	39½
GSX160601**	35½	35½	37¾

*Note: All the Dimensions (W, D, H) are for reference only.

MODEL	DIMENSIONS		
	W"	D"	H"
GSX16S181A*	29	29	32
GSX16S241A*	29	29	32
GSX16S301A*	29	29	35 ¾
GSX16S361A*	29	29	39 ½
GSX16S421A*	35½	35½	35 ¾
GSX16S481A*	35½	35½	39 ½

*Note: All the Dimensions (W, D, H) are for reference only.

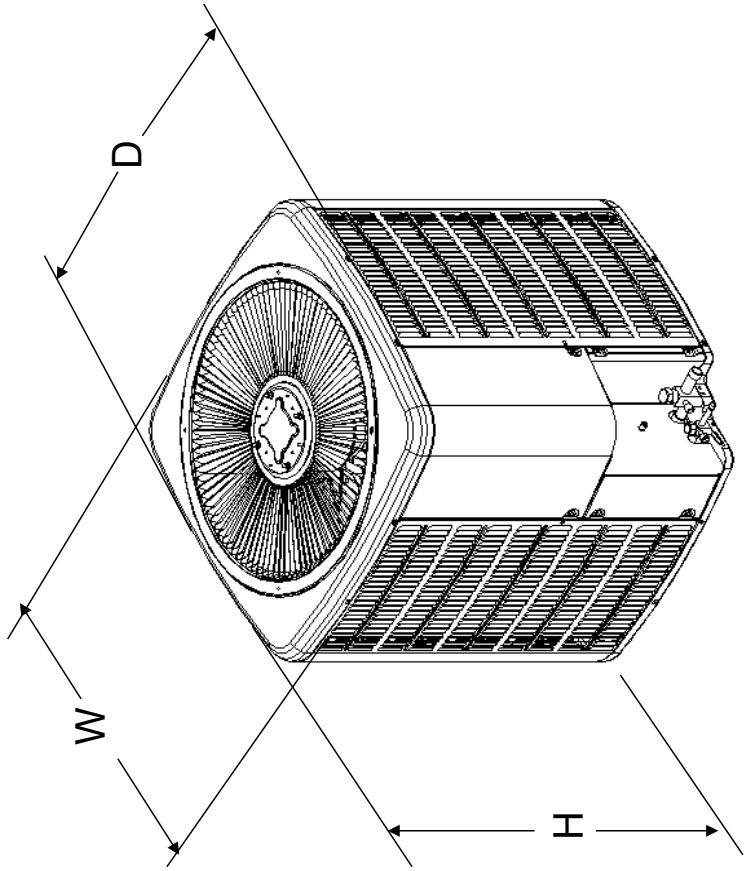

SPECIAL CHARACTERISTICS

= 6SIGMA = CRITICAL CHARACTERISTIC = SIGNIFICANT CHARACTERISTIC

COMPONENTS AND MATERIALS SPECIFIED HEREIN WILL ALSO CONFORM TO THE APPLICABLE SECTION OF GOODMAN MSP 8240 WORKMANSHIP STANDARD FOR FIT, FEEL AND FINISH.

CONFIDENTIAL PROPERTY OF THE GOODMAN MANUFACTURING COMPANY, L.P. NOT TO BE DISCLOSED TO OTHERS, COPIED, OR USED FOR ANY PURPOSE EXCEPT AS AUTHORIZED IN WRITING. MUST BE RETURNED UPON DEMAND, ON COMPLETION OF ORDER, OR OTHER PURPOSE FOR WHICH IT WAS LENT.

Goodman Manufacturing Co., L.P.

DRAWING TO BE INTERPRETED IN ACCORDANCE WITH ASME Y14.100

DIMENSIONS ARE IN INCHES UNLESS OTHERWISE NOTED

TOLERANCES:
ANGLES ± 1/2°
.XX ± .03
.XXX ± .015
HOLE Ø ± .005
TUBE CUT LG ± .063

DWN BY: GL | ENG | DO NOT SCALE DRAWING | SHT 1 OF 1 | REV A

GSX16

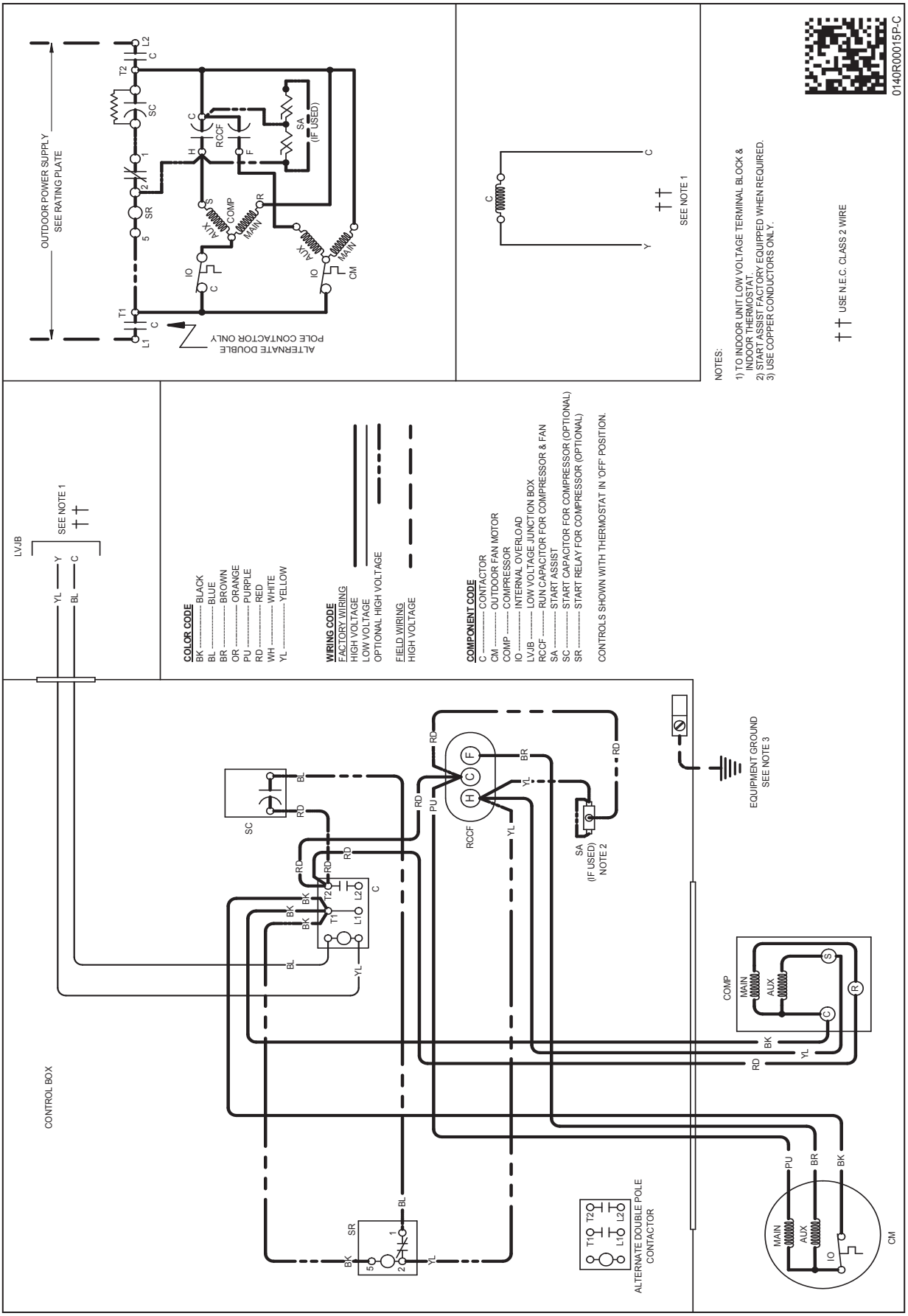

WARNING

High Voltage: Disconnect all power before servicing or installing this unit. Multiple power sources may be present. Failure to do so may cause property damage, personal injury, or death.

Wiring is subject to change. Always refer to the wiring diagram or the unit for the most up-to-date wiring.

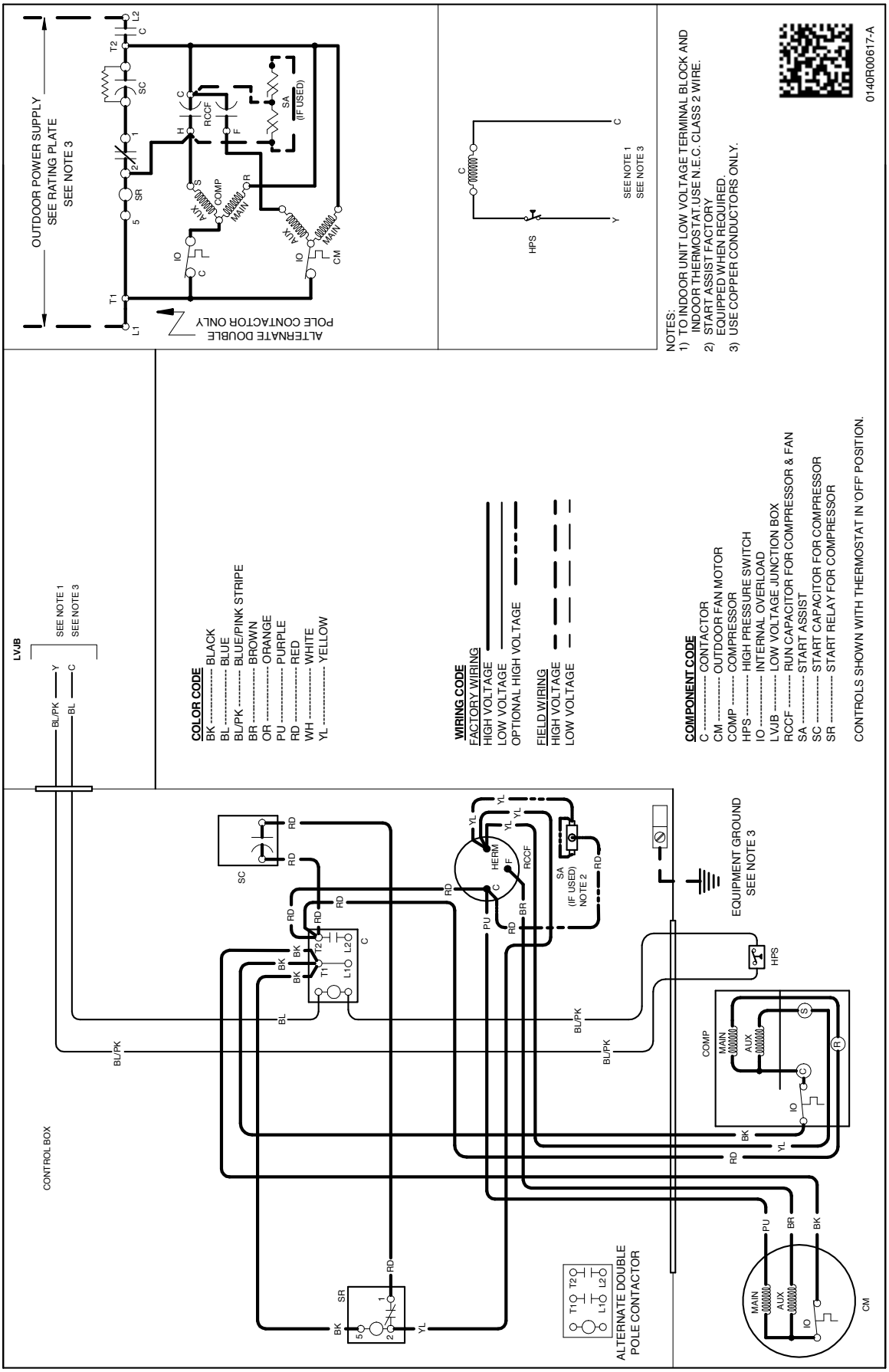

WARNING — **High Voltage:** Disconnect all power before servicing or installing this unit. Multiple power sources may be present. Failure to do so may cause property damage, personal injury, or death.

Wiring is subject to change. Always refer to the wiring diagram or the unit for the most up-to-date wiring.

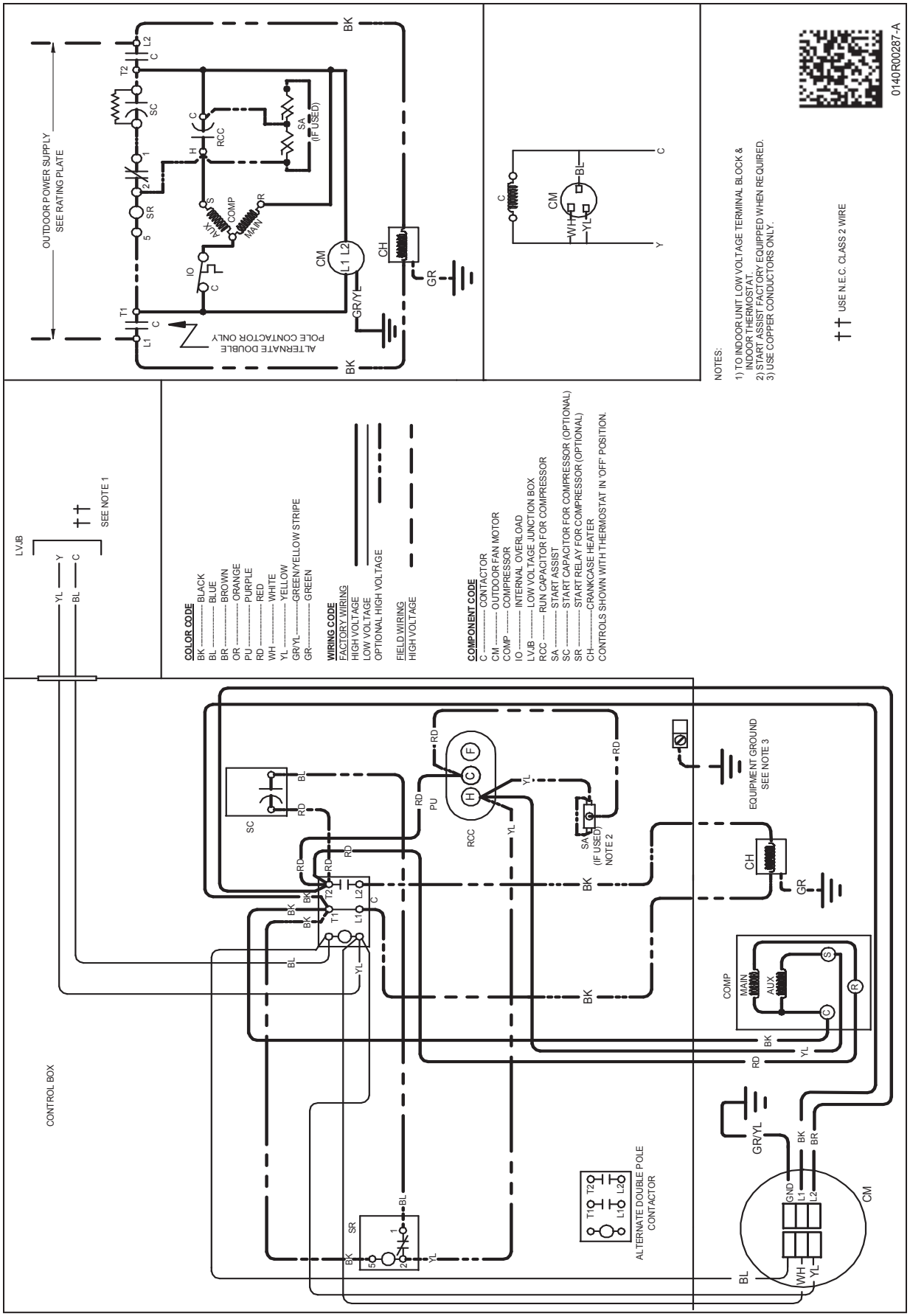

WARNING

High Voltage: Disconnect all power before servicing or installing this unit. Multiple power sources may be present. Failure to do so may cause property damage, personal injury, or death.

Wiring is subject to change. Always refer to the wiring diagram or the unit for the most up-to-date wiring.

MODEL	DESCRIPTION	GSX16 0181F*	GSX16 0241F*	GSX16 0301F*	GSX16 0311A*	GSX16 0361F*	GSX16 0371A*	GSX16 0421F*	GSX16 0481F*	GSX16 0601F*
ABK-20	Anchor Bracket Kit ^	X	X	X	X	X	X	X	X	X
ABK-21	Anchor Bracket Kit ^									
ASC-01	Anti-Short Cycle Kit	X	X	X	X	X	X	X	X	X
CSR-U-1	Hard-Start Kit	X	X	X	X	X	X			
CSR-U-2	Hard-start Kit					X	X	X	X	X
CSR-U-3	Hard-start Kit								X	X
FSK01A[1]	Freeze-Protection Kit	X	X	X	X	X	X	X	X	X
LSK02A[2]	Liquid-Line Solenoid Kit	X	X	X	X	X	X	X	X	X
LAKT01A	Low-Ambient Kit	X	X	X	X	X	X	X	X	
0130R00000S	Low-Pressure Switch Kit	X	X	X	X	X	X	X	X	X
TXV-30[2]	TXV Kit	X	X	X	X					
TXV-42[2]	TXV Kit					X	X	X		
TXV-48[2]	TXV Kit								X	
TXV-60[2]	TXV Kit									X

^ Contains 20 brackets; four brackets needed to anchor unit to pad

[1] Installed on indoor coil

[2] Field-installed, non-bleed, expansion valve kit.

MODEL	DESCRIPTION	GSX16S 181A*	GSX16S 241A*	GSX16S 301A*	GSX16S 361A*	GSX16S 421A*	GSX16S 481A*
ABK-20	Anchor Bracket Kit ^	X	X	X	X	X	X
ABK-21	Anchor Bracket Kit ^						
ASC-01	Anti-Short Cycle Kit	X	X	X	X	X	X
CSR-U-1	Hard-start Kit	X	X	X	X		
CSR-U-2	Hard-start Kit				X	X	X
CSR-U-3	Hard-start Kit						X
FSK01A[1]	Freeze Protection Kit	X	X	X	X	X	X
LSK02A[2]	Liquid Line Solenoid Kit	X	X	X	X	X	X
LAKT01A	Low-Ambient Kit	X	X	X	X	X	X
0130R00000S	Low-Pressure Switch Kit	X	X	X	X	X	X
TXV-30[2]	TXV Kit	X	X	X			
TXV-42[2]	TXV Kit				X	X	
TXV-48[2]	TXV Kit						X
TXV-60[2]	TXV Kit						

^ Contains 20 brackets; four brackets needed to anchor unit to pad

[1] Installed on indoor coil

[2] Field-installed, non-bleed, expansion valve kit.

All AHRI system ratings are accessible in the System Configurator tool via PartnerLink.

The manufacturing entity reserves the right to discontinue, or change at any time, specifications or designs without notice or without incurring obligations.