Franklin
Air Conditioning & Heating

GPG16M

Cooling Capacity: 22,800 – 58,500 BTU/h
Heating Capacity: 60,000 – 140,000 BTU/h

High-Efficiency Packaged Gas / Electric 2 to 5 Tons Up to 16 SEER / 81% AFUE

5 Tons

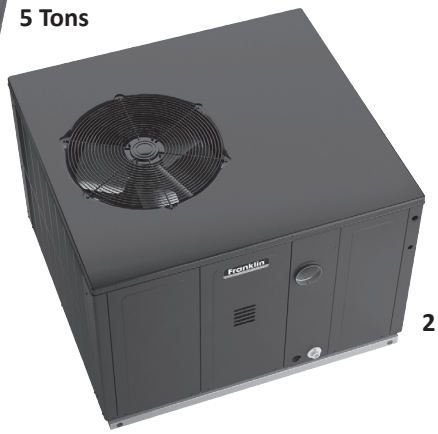

2 - 4 Tons

3

Contents

Nomenclature 2
Product Specifications 3
Expanded Cooling Data 4
Airflow Data 16
Dimensions 21
Wiring Diagram 26
Accessories 28

Standard Features

- Durable, corrosion-resistant T-140 aluminized steel tubular heat exchanger
- High-efficiency two-stage scroll compressor
- Convertible airflow: horizontal or downflow application
- Multi-speed ECM indoor blower motor
- Copper tube/aluminum fin condenser coil
- All-aluminum evaporator coil on 2- to 4-ton units
- Aluminum-copper evaporator coil on 5-ton units
- Power-assisted combustion
- Loss-of-charge protection & high-pressure switch
- AHRI Certified; ETL Listed
- Two-stage gas valve; natural gas with easy conversion to propane with accessory kit
- Direct spark ignition system includes a microprocessor-based control for the entire ignition sequence
- All blower operation and all safety circuits complete with self-diagnostics
- All models comply with California Low NOx emission standards (40ng/J NOx)
- This furnace does not comply with the SCAQMD Rule 1111 14 ng/J NOx emission limit and therefore is not eligible for installation in California's South Coast Air Quality Management District (SCAQMD). This furnace may be installed in SJVAPCD until 4/1/2022 provided the date of manufacture is September 30, 2021 or earlier and the emission fees are paid.

Cabinet Features

- Fully insulated heavy-gauge, zinc-coated steel cabinet with UV-resistant powder-paint finish
- Aluminum foil-facing internal insulation reinforced with fiberglass scrim
- Convenient access panels
- One roof curb fits 2-4 ton units
- Bottom, 2" high base rails for easier handling
- 2-4 ton models fit a standard-size pick-up truck
- When properly anchored, meets the 2010 Florida Building Code unit integrity requirements for hurricane-type winds (Anchor bracket kits available.)
- Meets cabinet air leakage requirements when tested in accordance with ASHRAE standard 193

3

3

3

20 YEAR UNIT REPLACEMENT HEAT EXCHANGER LIMITED WARRANTY*
10 YEAR PARTS LIMITED WARRANTY*
2 YEAR UNIT REPLACEMENT LIMITED WARRANTY*

Intertek

AHRI CERTIFIED

COMPANY WITH QUALITY SYSTEM CERTIFIED BY DNV GL = ISO 9001 =

COMPANY WITH ENVIRONMENTAL SYSTEM CERTIFIED BY DNV GL = ISO 14001 =

* Complete warranty details available from your local dealer or at www.goodmanmfg.com. To receive the 2-Year Unit Replacement Limited Warranty, 20-Year Heat Exchanger Limited Warranty (good for as long as you own your home), and 10-Year Parts Limited Warranty, online registration must be completed within 60 days of installation. Online registration is not required in California or Quebec.

G	P	G	16	36	080	M	4	1	**
1	2	3	4,5	6,7	8,9,10	11	12	13	14,15

Brand

G Franklin® brand

Product Category

P Packaged Unit

Unit Type

G Gas/Electric

D Dual-Fuel

Efficiency

14 14 SEER

16 16 SEER

Nominal Capacity

24 2 Tons 36 3 Tons 42 3½ Tons

30 2½ tons 37 3 Tons ~~48 4 Tons~~

60 5 Tons

Engineering

Major/ Minor Revisions

Electrical

1 208-230/1/60

Refrigerant

4 R-410A

Airflow

M Multi-Position

Heat Input

60 60 MBTU/h 100 100 MBTU/h

80 80 MBTU/h 140 138 MBTU/h

	GPG1624 060M41AA	GPG1630 080M41AA	GPG1636 080M41AA	GPG1642 100M41AA	GPG1648 100M41AA	GPG1660 140M41AA	GPG1660 140M41B*
Cooling Capacity							
Total BTU/h	22,800	28,600	34,200	40,000	45,500	58,500	58,000
Sensible BTU/h	18,200	21,800	27,400	29,600	32,800	43,500	43,500
SEER / EER	16.0 / 12.0	15.5 / 12.0	16.0 / 12.0	16.0 / 12.0	16.0 / 12.0	16.0 / 12.0	16.0 / 12.0
Decibels	76	76	76	78	78	78	78
AHRI Reference #s	8082387	8082383	8082384	8082385	8082386	9134477	205726749
Heating Capacity (BTU/h)							
High-Fire Input / Output	60,000/47,000	80,000/62,000	80,000/62,000	100,000/78,000	100,000/78,000	138,000/112,000	138,000/112,000
Low-Fire Input / Output	45,000/35,000	60,000/47,000	60,000/47,000	75,000/58,000	75,000/58,000	103,000/84,000	105,000/85,000
AFUE	81	81	81	81	81	81	81
Temperature Rise Range	35- 65	35- 65	35- 65	35- 65	35- 65	55-105	35- 65
No. of Burners	3	4	4	5	5	6	6
Orifice Size (Natural/Propane)	45 / 1.25MM	45 / 1.25MM	45 / 1.25MM	45 / 1.25MM	45 / 1.25MM	53 / 1.51MM	43 / 1.32MM
Evaporator Motor							
Type	ECM	ECM	ECM	ECM	ECM	ECM	ECM
Wheel (D x W)	10" x 8"	10" x 9"	11" x 10"	11" x 10"	11" x 10"	11" x 10"	12" x 11"
Indoor Nominal CFM	800	950	1,200	1,250	1,300	2,000	2,000
Motor Speed Tap (Cooling)	T3 L / T4 H	T3 L / T4 H	T3 L / T4 H	T3 L / T4 H	T3 L / T4 H	T3 L / T1 H	T3 L / T1 H
RPM/Amps (Cooling)	1050 / 3.8	1050 / 3.8	1050 / 3.8	1050 / 5.4	1050 / 5.4	1050 / 6.9	1200 / 6.9
Horsepower	1/2	1/2	1/2	3/4	3/4	1	1
Evaporator Coil							
Face Area (ft^2)	4.3	4.3	5.7	5.7	5.7	8.9	8.9
Rows Deep/Fins per Inch	3 / 14	3 / 14	4 / 14	4 / 14	4 / 14	4 / 16	4 / 16
Piston Size (Cooling)	TXV	TXV	TXV	TXV	TXV	TXV	TXV
Filter Size (ft^2)	3.5	4.3	4.3	5.6	5.6	8.9	9.2
Drain Size (NPT)	¾"	¾"	¾"	¾"	¾"	¾"	¾"
Refrigerant Charge (oz.)	70	70	158	143	100	154	154
Condenser Fan / Coil							
Horsepower- RPM	1/6- 815	1/4- 830	1/4- 830	1/4- 1,075	1/4- 1,075	1/3- 1,095	1/3- 1,095
Diameter / # of Blades	22" / 3	22" / 3	22" / 3	22" / 3	22" / 3	22" / 4	22" / 3
Outdoor Nominal CFM	2,200	2,200	2,600	3,200	3,100	3,800	3,800
Face Area (ft^2)	12.3	8.7	14.9	14.9	14.4	19	19
Rows Deep/Fins per Inch	1 / 24	2 / 27	2 / 16	2 / 16	2 / 27	2 / 27	2 / 28
Compressor							
Quantity / Type / Stage	1 / Scroll / 2	1 / Scroll / 2	1 / Scroll / 2	1 / Scroll / 2	1 / Scroll / 2	1 / Scroll / 2	1 / Scroll / 2
Compressor RLA/LRA	11.7 / 58.3	13.1 / 73.0	15.6 / 83.0	17.9 / 96.0	21.2 / 104.0	26.9 / 152.9	26.9 / 139.9
Electrical Data							
Voltage-Phase (Frequency 60Hz)	208/230-1	208/230-1	208/230-1	208/230-1	208/230-1	208/230-1	208/230-1
Indoor Blower FLA/LRA	3.8	3.8	3.8	5.4	5.4	6.9	6.9
Outdoor Fan FLA/LRA	1.1 / 1.7	1.5 / 3.0	1.3 / 3.0	1.4 / 2.9	1.4 / 2.9	2/4.4	2/4.4
Total Unit Amps	16.6	18.4	20.7	24.7	28.0	35.8	35.8
Min. Circuit Ampacity [1]	19.5	21.7	24.6	29.2	33.3	42.5	43.4
Max. Overcurrent Protection [2]	30 amps	30 amps	40 amps	45 amps	50 amps	60 amps	70 amps
Entrance Size Power Supply	1⅛"	1⅛"	1⅛"	1⅛"	1⅛"	1⅛"	1⅛"
Entrance Size Control Voltage	⅞"	⅞"	⅞"	⅞"	⅞"	⅞"	⅞"
Operating / Ship Weights (lbs)	370 / 380	397 / 407	470 / 480	495 / 505	490 / 500	630 / 660	655 / 713

[1] Wire size should be determined in accordance with National Electrical Codes. Extensive wire runs will require larger wire sizes.
[2] Must use time-delay fuses or HACR-type circuit breakers of the same size as noted.
Note: Always check the S&R plate for electrical data on the unit being installed.

			Outdoor Ambient Temperature																							
			65ºF				75ºF				85ºF				95ºF				105ºF				115ºF			
			Entering Indoor Wet Bulb Temperature																							
IDB	Airflow		59	63	67	71	59	63	67	71	59	63	67	71	59	63	67	71	59	63	67	71	59	63	67	71
70	910	MBh	23.3	24.1	26.4	-	22.7	23.5	25.8	-	22.2	23.0	25.2	-	21.6	22.4	24.6	-	20.5	21.3	23.3	-	19.0	19.7	21.6	-
		S/T	0.80	0.67	0.46	-	0.83	0.69	0.48	-	0.85	0.71	0.49	-	0.88	0.73	0.51	-	0.91	0.76	0.53	-	0.92	0.77	0.53	-
		Δ T	19	16	12	-	19	16	13	-	19	16	13	-	19	17	13	-	19	16	12	-	18	15	12	-
		kW	1.56	1.59	1.64	-	1.68	1.72	1.78	-	1.79	1.83	1.89	-	1.89	1.93	2.00	-	1.97	2.02	2.09	-	2.04	2.09	2.16	-
		Amps	6.9	7.0	7.2	-	7.4	7.5	7.7	-	7.9	8.1	8.3	-	8.4	8.6	8.9	-	8.9	9.1	9.4	-	9.4	9.6	9.9	-
		HI PR	237	255	269	-	266	286	302	-	302	325	344	-	344	371	391	-	388	417	440	-	428	461	487	-
		LO PR	112	119	130	-	118	126	137	-	123	131	143	-	129	137	150	-	135	144	157	-	140	149	162	-
	811	MBh	22.6	23.4	25.6	-	22.0	22.9	25.0	-	21.5	22.3	24.4	-	21.0	21.8	23.8	-	19.9	20.7	22.7	-	18.5	19.2	21.0	-
		S/T	0.76	0.64	0.44	-	0.79	0.66	0.46	-	0.81	0.68	0.47	-	0.84	0.70	0.48	-	0.87	0.73	0.50	-	0.88	0.73	0.51	-
		Δ T	20	17	13	-	20	17	13	-	20	17	13	-	20	17	13	-	20	17	13	-	18	16	12	-
		kW	1.54	1.58	1.63	-	1.67	1.71	1.76	-	1.78	1.82	1.88	-	1.87	1.92	1.98	-	1.95	2.00	2.07	-	2.03	2.07	2.14	-
		Amps	6.8	7.0	7.2	-	7.3	7.5	7.7	-	7.9	8.0	8.3	-	8.3	8.5	8.8	-	8.8	9.0	9.3	-	9.3	9.5	9.8	-
		HI PR	235	253	267	-	263	283	299	-	299	322	340	-	341	367	388	-	384	413	436	-	424	456	482	-
		LO PR	111	118	129	-	117	124	136	-	122	129	141	-	128	136	148	-	134	142	155	-	138	147	161	-
	711	MBh	20.8	21.6	23.7	-	20.4	21.1	23.1	-	19.9	20.6	22.6	-	19.4	20.1	22.0	-	18.4	19.1	20.9	-	17.1	17.7	19.4	-
		S/T	0.74	0.62	0.43	-	0.76	0.64	0.44	-	0.78	0.65	0.45	-	0.81	0.67	0.47	-	0.84	0.70	0.49	-	0.85	0.71	0.49	-
		Δ T	20	17	13	-	20	17	13	-	20	17	13	-	20	18	13	-	20	17	13	-	19	16	12	-
		kW	1.51	1.54	1.59	-	1.63	1.66	1.72	-	1.73	1.77	1.83	-	1.82	1.87	1.93	-	1.90	1.95	2.01	-	1.97	2.02	2.09	-
		Amps	6.6	6.8	7.0	-	7.1	7.3	7.5	-	7.7	7.8	8.1	-	8.1	8.3	8.6	-	8.6	8.8	9.1	-	9.1	9.3	9.6	-
		HI PR	228	245	259	-	255	275	290	-	290	313	330	-	331	356	376	-	372	401	423	-	411	443	467	-
		LO PR	107	114	125	-	113	121	132	-	118	125	137	-	124	132	144	-	130	138	151	-	134	143	156	-
75	910	MBh	23.6	24.3	26.4	28.3	23.1	23.8	25.7	27.6	22.5	23.2	25.1	27.0	22.0	**22.6**	24.5	26.3	20.9	21.5	23.3	25.0	19.4	19.9	21.6	23.2
		S/T	0.91	0.81	0.62	0.40	0.94	0.84	0.64	0.41	0.97	0.87	0.65	0.42	1.00	**0.89**	0.68	0.43	1.00	0.93	0.70	0.45	1.00	0.93	0.71	0.46
		Δ T	22	20	16	11	22	20	17	11	22	20	17	11	22	**20**	17	12	21	20	17	11	20	19	15	11
		kW	1.57	1.61	1.66	1.71	1.70	1.73	1.79	1.85	1.81	1.85	1.91	1.98	1.91	**1.95**	2.02	2.09	1.99	2.03	2.10	2.18	2.06	2.11	2.18	2.26
		Amps	6.9	7.1	7.3	7.5	7.4	7.6	7.8	8.1	8.0	8.2	8.4	8.7	8.5	**8.7**	8.9	9.2	9.0	9.2	9.5	9.8	9.5	9.7	10.0	10.3
		HI PR	239	258	272	284	269	289	305	318	306	329	347	362	348	**375**	395	412	392	421	445	464	433	466	492	513
		LO PR	113	120	131	140	119	127	139	148	124	132	144	153	130	**139**	151	161	137	145	159	169	141	150	164	175
	811	MBh	23.0	23.6	25.6	27.5	22.4	23.1	25.0	26.8	21.9	22.5	24.4	26.2	21.4	**22.0**	23.8	25.5	20.3	20.9	22.6	24.3	18.8	19.3	20.9	22.5
		S/T	0.87	0.78	0.59	0.38	0.90	0.80	0.61	0.39	0.92	0.83	0.62	0.40	0.95	**0.85**	0.64	0.41	0.99	0.88	0.67	0.43	1.00	0.89	0.67	0.43
		Δ T	23	21	17	12	23	21	17	12	23	21	17	12	23	**21**	17	12	23	21	17	12	21	20	16	11
		kW	1.56	1.59	1.64	1.70	1.68	1.72	1.78	1.84	1.79	1.83	1.89	1.96	1.89	**1.93**	2.00	2.07	1.97	2.02	2.09	2.16	2.04	2.09	2.16	2.24
		Amps	6.9	7.0	7.2	7.5	7.4	7.5	7.7	8.0	7.9	8.1	8.3	8.6	8.4	**8.6**	8.9	9.2	8.9	9.1	9.4	9.7	9.4	9.6	9.9	10.2
		HI PR	237	255	269	281	266	286	302	315	303	326	344	359	345	**371**	392	408	388	417	440	459	428	461	487	508
		LO PR	112	119	130	138	118	126	137	146	123	131	143	152	129	**137**	150	160	135	144	157	167	140	149	162	173
	711	MBh	21.2	21.8	23.6	25.3	20.7	21.3	23.1	24.8	20.2	20.8	22.5	24.2	19.7	**20.3**	22.0	23.6	18.7	19.3	20.9	22.4	17.3	17.9	19.3	20.7
		S/T	0.84	0.75	0.57	0.36	0.87	0.78	0.59	0.38	0.89	0.80	0.60	0.39	0.92	**0.82**	0.62	0.40	0.95	0.85	0.65	0.42	0.96	0.86	0.65	0.42
		Δ T	23	21	17	12	23	21	18	12	23	21	18	12	23	**22**	18	12	23	21	17	12	22	20	16	11
		kW	1.52	1.55	1.60	1.66	1.64	1.68	1.73	1.79	1.75	1.79	1.85	1.91	1.84	**1.88**	1.95	2.01	1.92	1.96	2.03	2.10	1.99	2.04	2.11	2.18
		Amps	6.7	6.8	7.0	7.3	7.2	7.3	7.5	7.8	7.7	7.9	8.1	8.4	8.2	**8.4**	8.6	8.9	8.7	8.9	9.1	9.5	9.1	9.3	9.6	10.0
		HI PR	230	247	261	273	258	278	293	306	293	316	333	348	334	**360**	380	396	376	405	427	446	415	447	472	492
		LO PR	108	115	126	134	115	122	133	142	119	127	138	147	125	**133**	145	155	131	140	152	162	136	144	158	168

IDB: Entering Indoor Dry Bulb Temperature

Shaded area reflects ACCA (TVA) conditions

kW = Total system power

High and low pressures are measured at the liquid and suction service valves.

Amps = outdoor unit amps (comp.+fan)

Expanded Cooling Data — GPG1624***M41**

			Outdoor Ambient Temperature																							
			65ºF				75ºF				85ºF				95ºF				105ºF				115ºF			
			Entering Indoor Wet Bulb Temperature																							
IDB	Airflow		59	63	67	71	59	63	67	71	59	63	67	71	59	63	67	71	59	63	67	71	59	63	67	71
80	910	MBh	24.1	24.6	26.3	28.1	23.5	24.0	25.7	27.4	22.9	23.4	25.1	26.8	22.4	22.9	24.4	26.1	21.3	21.7	23.2	24.8	19.7	20.1	21.5	23.0
		S/T	1.00	0.94	0.76	0.57	1.00	0.97	0.79	0.59	1.00	1.00	0.81	0.61	1.00	1.00	0.84	0.62	1.00	1.00	0.87	0.65	1.00	1.00	0.87	0.65
		Δ T	24	23	20	16	24	24	20	16	23	24	20	16	23	23	21	16	21	22	20	16	20	20	19	15
		kW	1.58	1.62	1.67	1.73	1.71	1.75	1.81	1.87	1.82	1.86	1.93	1.99	1.92	1.97	2.03	2.10	2.01	2.05	2.12	2.20	2.08	2.13	2.20	2.28
		Amps	7.0	7.1	7.3	7.6	7.5	7.6	7.9	8.1	8.1	8.2	8.5	8.8	8.6	8.7	9.0	9.3	9.1	9.3	9.5	9.9	9.5	9.8	10.1	10.4
		HI PR	242	260	275	287	271	292	308	322	309	332	351	366	352	378	399	417	395	426	449	469	437	470	497	518
		LO PR	114	121	133	141	121	128	140	149	125	133	146	155	132	140	153	163	138	147	160	171	143	152	166	176
	811	MBh	23.4	23.9	25.5	27.3	22.8	23.3	24.9	26.6	22.3	22.8	24.3	26.0	21.7	22.2	**23.7**	25.4	20.6	21.1	22.5	24.1	19.1	19.5	20.9	22.3
		S/T	0.95	0.89	0.73	0.54	0.99	0.93	0.75	0.56	1.00	0.95	0.77	0.58	1.00	0.98	**0.80**	0.60	1.00	1.00	0.83	0.62	1.00	1.00	0.83	0.62
		Δ T	25	24	21	17	26	24	21	17	25	25	21	17	25	25	**21**	17	23	24	21	17	22	22	20	16
		kW	1.57	1.61	1.66	1.71	1.70	1.73	1.79	1.85	1.81	1.85	1.91	1.98	1.91	1.95	**2.02**	2.09	1.99	2.03	2.10	2.18	2.06	2.11	2.18	2.26
		Amps	6.9	7.1	7.3	7.5	7.4	7.6	7.8	8.1	8.0	8.2	8.4	8.7	8.5	8.7	**8.9**	9.2	9.0	9.2	9.5	9.8	9.5	9.7	10.0	10.3
		HI PR	239	258	272	284	269	289	305	318	306	329	347	362	348	375	**396**	413	392	421	445	464	433	466	492	513
		LO PR	113	120	131	140	119	127	139	148	124	132	144	153	130	139	**151**	161	137	145	159	169	141	150	164	175
	711	MBh	21.6	22.0	23.5	25.2	21.1	21.5	23.0	24.6	20.6	21.0	22.4	24.0	20.1	20.5	21.9	23.4	19.1	19.5	20.8	22.2	17.7	18.0	19.3	20.6
		S/T	0.92	0.86	0.70	0.52	0.95	0.89	0.73	0.54	0.98	0.92	0.74	0.56	1.01	0.94	0.77	0.57	1.05	0.98	0.80	0.60	1.05	0.99	0.80	0.60
		Δ T	26	25	21	17	26	25	22	17	26	25	22	17	26	25	22	17	26	25	21	17	24	23	20	16
		kW	1.53	1.57	1.62	1.67	1.65	1.69	1.75	1.81	1.76	1.80	1.86	1.93	1.86	1.90	1.96	2.03	1.94	1.98	2.05	2.12	2.01	2.05	2.12	2.20
		Amps	6.8	6.9	7.1	7.3	7.2	7.4	7.6	7.9	7.8	8.0	8.2	8.5	8.3	8.5	8.7	9.0	8.7	8.9	9.2	9.5	9.2	9.4	9.7	10.1
		HI PR	232	250	264	275	261	280	296	309	296	319	337	351	338	363	384	400	380	409	432	450	420	452	477	497
		LO PR	110	117	127	136	116	123	134	143	120	128	140	149	126	134	147	156	132	141	154	164	137	146	159	169
85	910	MBh	24.5	25.0	26.1	27.9	23.9	24.4	25.5	27.2	23.3	23.8	24.9	26.6	22.8	23.2	24.3	25.9	21.6	22.1	23.1	24.6	20.0	20.4	21.4	22.8
		S/T	1.00	1.00	0.91	0.74	1.00	1.00	0.94	0.77	1.00	1.00	0.97	0.79	1.00	1.00	1.00	0.81	1.00	1.00	1.00	0.84	1.00	1.00	1.00	0.85
		Δ T	25	25	24	21	24	25	24	21	24	24	24	21	23	23	25	21	22	22	23	21	20	21	22	20
		kW	1.60	1.63	1.69	1.74	1.73	1.76	1.82	1.88	1.84	1.88	1.94	2.01	1.94	1.98	2.05	2.12	2.02	2.07	2.14	2.22	2.10	2.15	2.22	2.30
		Amps	7.0	7.2	7.4	7.6	7.5	7.7	7.9	8.2	8.1	8.3	8.5	8.8	8.6	8.8	9.1	9.4	9.1	9.3	9.6	10.0	9.6	9.8	10.1	10.5
		HI PR	244	263	278	290	274	295	311	325	312	335	354	369	355	382	403	421	399	430	454	473	441	475	501	523
		LO PR	115	123	134	143	122	130	141	151	127	135	147	157	133	141	154	164	139	148	162	172	144	153	167	178
	811	MBh	23.8	24.2	25.4	27.1	23.2	23.7	24.8	26.4	22.7	23.1	24.2	25.8	22.1	22.5	23.6	25.2	21.0	21.4	22.4	23.9	19.5	19.8	20.8	22.2
		S/T	1.00	0.96	0.87	0.71	1.00	1.00	0.90	0.73	1.00	1.00	0.92	0.75	1.00	1.00	0.95	0.77	1.00	1.00	0.99	0.80	1.00	1.00	1.00	0.81
		Δ T	27	26	25	22	26	27	25	22	26	26	25	22	25	26	26	22	24	24	25	22	22	23	24	20
		kW	1.58	1.62	1.67	1.73	1.71	1.75	1.81	1.87	1.82	1.86	1.93	1.99	1.92	1.97	2.03	2.10	2.01	2.05	2.12	2.20	2.08	2.13	2.20	2.28
		Amps	7.0	7.1	7.3	7.6	7.5	7.6	7.9	8.1	8.1	8.2	8.5	8.8	8.6	8.7	9.0	9.3	9.1	9.3	9.5	9.9	9.5	9.8	10.1	10.4
		HI PR	242	260	275	287	271	292	308	322	309	332	351	366	352	378	399	417	395	426	449	469	437	470	497	518
		LO PR	114	121	133	141	121	128	140	149	125	133	146	155	132	140	153	163	138	147	160	171	143	152	166	176
	711	MBh	21.9	22.4	23.4	25.0	21.4	21.8	22.9	24.4	20.9	21.3	22.3	23.8	20.4	20.8	21.8	23.2	19.4	19.8	20.7	22.1	18.0	18.3	19.2	20.5
		S/T	0.96	0.93	0.84	0.68	1.00	0.96	0.87	0.70	1.00	0.99	0.89	0.72	1.00	1.00	0.92	0.75	1.00	1.00	0.95	0.77	1.00	1.00	0.96	0.78
		Δ T	27	27	25	22	28	27	26	22	27	27	26	22	26	27	26	22	25	26	26	22	23	24	24	21
		kW	1.54	1.58	1.63	1.68	1.67	1.70	1.76	1.82	1.78	1.82	1.88	1.94	1.87	1.92	1.98	2.05	1.95	2.00	2.07	2.14	2.02	2.07	2.14	2.22
		Amps	6.8	7.0	7.2	7.4	7.3	7.4	7.7	7.9	7.9	8.0	8.3	8.5	8.3	8.5	8.8	9.1	8.8	9.0	9.3	9.6	9.3	9.5	9.8	10.1
		HI PR	235	252	267	278	263	283	299	312	299	322	340	355	341	367	387	404	384	413	436	455	424	456	482	502
		LO PR	111	118	129	137	117	124	136	145	122	129	141	150	128	136	148	158	134	142	155	165	138	147	161	171

IDB: Entering Indoor Dry Bulb Temperature

High and low pressures are measured at the liquid and suction service valves.

Shaded area reflects AHRI (TVA) conditions

kW = Total system power

Amps = outdoor unit amps (comp.+fan)

Expanded Cooling Data — GPG1630***M41**

			Outdoor Ambient Temperature																							
			65ºF				75ºF				85ºF				95ºF				105ºF				115ºF			
			Entering Indoor Wet Bulb Temperature																							
IDB	Airflow		59	63	67	71	59	63	67	71	59	63	67	71	59	63	67	71	59	63	67	71	59	63	67	71
70	1062	MBh	29.7	30.7	33.7	-	29.0	30.0	32.9	-	28.3	29.3	32.1	-	27.6	28.6	31.3	-	26.2	27.2	29.8	-	24.3	25.2	27.6	-
		S/T	0.77	0.64	0.44	-	0.80	0.66	0.46	-	0.82	0.68	0.47	-	0.84	0.70	0.49	-	0.87	0.73	0.51	-	0.88	0.74	0.51	-
		ΔT	20	17	13	-	20	17	13	-	20	17	13	-	20	17	13	-	20	17	13	-	19	16	12	-
		kW	1.98	2.02	2.08	-	2.13	2.18	2.25	-	2.27	2.32	2.39	-	2.39	2.44	2.52	-	2.49	2.55	2.63	-	2.58	2.64	2.73	-
		Amps	8.5	8.7	9.0	-	9.1	9.3	9.6	-	9.8	10.0	10.3	-	10.4	10.7	11.0	-	11.0	11.3	11.6	-	11.6	11.9	12.2	-
		HI PR	238	257	271	-	268	288	304	-	304	327	346	-	347	373	394	-	390	420	443	-	431	464	490	-
		LO PR	108	114	125	-	114	121	132	-	118	126	137	-	124	132	144	-	130	138	151	-	134	143	156	-
	946	MBh	28.8	29.9	32.7	-	28.1	29.2	31.9	-	27.5	28.5	31.2	-	26.8	27.8	30.4	-	25.5	26.4	28.9	-	23.6	24.4	26.8	-
		S/T	0.73	0.61	0.42	-	0.76	0.63	0.44	-	0.78	0.65	0.45	-	0.80	0.67	0.46	-	0.83	0.70	0.48	-	0.84	0.70	0.49	-
		ΔT	20	18	13	-	21	18	14	-	21	18	14	-	21	18	14	-	21	18	14	-	19	17	13	-
		kW	1.96	2.00	2.07	-	2.11	2.16	2.23	-	2.25	2.30	2.37	-	2.37	2.42	2.50	-	2.47	2.53	2.61	-	2.56	2.62	2.70	-
		Amps	8.5	8.7	8.9	-	9.1	9.3	9.5	-	9.8	10.0	10.3	-	10.3	10.6	10.9	-	10.9	11.2	11.5	-	11.5	11.8	12.1	-
		HI PR	236	254	268	-	265	285	301	-	301	324	342	-	343	369	390	-	386	415	439	-	427	459	485	-
		LO PR	106	113	124	-	112	120	131	-	117	124	136	-	123	131	143	-	129	137	149	-	133	142	155	-
	830	MBh	26.6	27.6	30.2	-	26.0	26.9	29.5	-	25.3	26.3	28.8	-	24.7	25.6	28.1	-	23.5	24.3	26.7	-	21.8	22.6	24.7	-
		S/T	0.71	0.59	0.41	-	0.73	0.61	0.42	-	0.75	0.63	0.43	-	0.77	0.65	0.45	-	0.80	0.67	0.46	-	0.81	0.68	0.47	-
		ΔT	21	18	14	-	21	18	14	-	21	18	14	-	21	18	14	-	21	18	14	-	20	17	13	-
		kW	1.91	1.95	2.02	-	2.06	2.11	2.17	-	2.19	2.24	2.31	-	2.31	2.36	2.44	-	2.41	2.46	2.54	-	2.49	2.55	2.63	-
		Amps	8.3	8.5	8.7	-	8.9	9.0	9.3	-	9.5	9.7	10.0	-	10.1	10.3	10.6	-	10.7	10.9	11.2	-	11.2	11.5	11.8	-
		HI PR	229	246	260	-	257	277	292	-	292	314	332	-	333	358	378	-	374	403	426	-	414	445	470	-
		LO PR	103	110	120	-	109	116	127	-	113	121	132	-	119	127	138	-	125	133	145	-	129	137	150	-
75	1062	MBh	30.2	31.1	33.6	36.1	29.5	30.3	32.8	35.2	28.8	29.6	32.1	34.4	28.1	**28.9**	31.3	33.6	26.7	27.4	29.7	31.9	24.7	25.4	27.5	29.5
		S/T	0.87	0.78	0.59	0.38	0.90	0.81	0.61	0.39	0.93	0.83	0.63	0.40	0.96	**0.86**	0.65	0.42	0.99	0.89	0.67	0.43	1.00	0.90	0.68	0.44
		ΔT	23	21	17	12	23	21	17	12	23	21	17	12	23	**21**	18	12	23	21	17	12	21	20	16	11
		kW	1.99	2.04	2.10	2.17	2.15	2.20	2.27	2.34	2.29	2.34	2.42	2.50	2.41	**2.46**	2.55	2.63	2.51	2.57	2.66	2.75	2.60	2.66	2.75	2.85
		Amps	8.6	8.8	9.0	9.3	9.2	9.4	9.7	10.0	9.9	10.1	10.4	10.8	10.5	**10.8**	11.1	11.4	11.1	11.4	11.7	12.1	11.7	12.0	12.3	12.8
		HI PR	241	259	274	285	270	291	307	320	307	331	349	364	350	**377**	398	415	394	424	448	467	435	468	495	516
		LO PR	109	116	126	134	115	122	133	142	119	127	139	148	125	**133**	146	155	131	140	152	162	136	144	158	168
	946	MBh	29.3	30.2	32.6	35.0	28.6	29.5	31.9	34.2	27.9	28.8	31.1	33.4	27.2	**28.1**	30.4	32.6	25.9	26.6	28.8	31.0	24.0	24.7	26.7	28.7
		S/T	0.83	0.74	0.56	0.36	0.86	0.77	0.58	0.38	0.88	0.79	0.60	0.39	0.91	**0.82**	0.62	0.40	0.95	0.85	0.64	0.41	0.96	0.85	0.65	0.42
		ΔT	24	22	18	12	24	22	18	12	24	22	18	13	24	**22**	18	13	24	22	18	12	22	21	17	12
		kW	1.98	2.02	2.08	2.15	2.13	2.18	2.25	2.32	2.27	2.32	2.40	2.48	2.39	**2.44**	2.52	2.61	2.49	2.55	2.63	2.72	2.58	2.64	2.73	2.82
		Amps	8.5	8.7	9.0	9.3	9.1	9.3	9.6	9.9	9.8	10.0	10.3	10.7	10.4	**10.7**	11.0	11.4	11.0	11.3	11.6	12.0	11.6	11.9	12.2	12.7
		HI PR	238	257	271	283	268	288	304	317	304	328	346	361	347	**373**	394	411	390	420	443	462	431	464	490	511
		LO PR	108	114	125	133	114	121	132	141	118	126	137	146	124	**132**	144	153	130	138	151	161	134	143	156	166
	830	MBh	27.0	27.8	30.1	32.3	26.4	27.2	29.4	31.6	25.8	26.5	28.7	30.8	25.1	**25.9**	28.0	30.1	23.9	24.6	26.6	28.6	22.1	22.8	24.7	26.5
		S/T	0.80	0.72	0.54	0.35	0.83	0.74	0.56	0.36	0.85	0.76	0.58	0.37	0.88	**0.79**	0.60	0.38	0.91	0.82	0.62	0.40	0.92	0.82	0.62	0.40
		ΔT	24	22	18	13	24	22	18	13	24	22	18	13	25	**23**	19	13	24	22	18	13	23	21	17	12
		kW	1.93	1.97	2.03	2.10	2.08	2.12	2.19	2.27	2.21	2.26	2.33	2.41	2.33	**2.38**	2.46	2.54	2.43	2.48	2.57	2.65	2.51	2.57	2.66	2.75
		Amps	8.4	8.5	8.8	9.0	8.9	9.1	9.4	9.7	9.6	9.8	10.1	10.4	10.2	**10.4**	10.7	11.1	10.8	11.0	11.3	11.7	11.3	11.6	11.9	12.3
		HI PR	231	249	263	274	260	279	295	308	295	318	335	350	336	**362**	382	399	378	407	430	448	418	450	475	495
		LO PR	104	111	121	129	110	117	128	136	115	122	133	142	120	**128**	140	149	126	134	146	156	130	139	151	161

IDB: Entering Indoor Dry Bulb Temperature

Shaded area reflects ACCA (TVA) conditions

kW = Total system power

High and low pressures are measured at the liquid and suction service valves.

Amps = outdoor unit amps (comp.+fan)

Expanded Cooling Data — GPG1630***M41**

			Outdoor Ambient Temperature																							
			65ºF				75ºF				85ºF				95ºF				105ºF				115ºF			
			Entering Indoor Wet Bulb Temperature																							
IDB	Airflow		59	63	67	71	59	63	67	71	59	63	67	71	59	63	67	71	59	63	67	71	59	63	67	71
80	1062	MBh	30.7	31.4	33.5	35.8	30.0	30.6	32.7	35.0	29.3	29.9	32.0	34.2	28.6	29.2	31.2	33.3	27.1	27.7	29.6	31.7	25.1	25.7	27.4	29.3
		S/T	0.96	0.90	0.73	0.55	1.00	0.93	0.76	0.57	1.00	0.95	0.78	0.58	1.00	1.00	0.80	0.60	1.00	1.00	0.83	0.62	1.00	1.00	0.84	0.63
		Δ T	25	24	21	17	26	25	21	17	25	25	21	17	25	25	22	17	23	24	21	17	22	22	20	16
		kW	2.01	2.05	2.12	2.19	2.17	2.21	2.29	2.36	2.31	2.36	2.44	2.52	2.43	2.48	2.57	2.65	2.53	2.59	2.68	2.77	2.62	2.68	2.78	2.87
		Amps	8.7	8.9	9.1	9.4	9.3	9.5	9.8	10.1	10.0	10.2	10.5	10.9	10.6	10.8	11.2	11.5	11.2	11.5	11.8	12.2	11.8	12.1	12.5	12.9
		HI PR	243	262	276	288	273	294	310	324	311	334	353	368	354	381	402	419	398	428	452	472	440	473	500	521
		LO PR	110	117	127	136	116	123	135	143	120	128	140	149	127	135	147	157	133	141	154	164	137	146	159	170
	946	MBh	29.8	30.5	32.5	34.8	29.1	29.8	31.8	34.0	28.4	29.0	31.0	33.2	27.7	28.3	**30.3**	32.4	26.3	26.9	28.8	30.7	24.4	24.9	26.6	28.5
		S/T	0.91	0.86	0.70	0.52	0.95	0.89	0.72	0.54	0.97	0.91	0.74	0.55	1.00	0.94	**0.76**	0.57	1.00	0.97	0.79	0.59	1.00	0.98	0.80	0.60
		Δ T	26	25	22	18	27	26	22	18	27	26	22	18	27	26	**22**	18	26	25	22	18	24	24	21	17
		kW	1.99	2.04	2.10	2.17	2.15	2.20	2.27	2.34	2.29	2.34	2.42	2.50	2.41	2.46	**2.55**	2.63	2.51	2.57	2.66	2.75	2.60	2.66	2.75	2.85
		Amps	8.6	8.8	9.0	9.3	9.2	9.4	9.7	10.0	9.9	10.1	10.4	10.8	10.5	10.8	**11.1**	11.4	11.1	11.4	11.7	12.1	11.7	12.0	12.3	12.8
		HI PR	241	259	274	286	270	291	307	320	307	331	349	364	350	377	**398**	415	394	424	448	467	435	468	495	516
		LO PR	109	116	126	134	115	122	133	142	119	127	139	148	125	133	**146**	155	131	140	153	162	136	144	158	168
	830	MBh	27.5	28.1	30.0	32.1	26.9	27.5	29.3	31.4	26.2	26.8	28.6	30.6	25.6	26.2	27.9	29.9	24.3	24.8	26.5	28.4	22.5	23.0	24.6	26.3
		S/T	0.88	0.83	0.67	0.50	0.91	0.86	0.70	0.52	0.94	0.88	0.71	0.53	0.97	0.91	0.74	0.55	1.00	0.94	0.76	0.57	1.01	0.95	0.77	0.58
		Δ T	27	26	22	18	27	26	23	18	27	26	23	18	27	26	23	18	27	26	22	18	25	24	21	17
		kW	1.94	1.99	2.05	2.12	2.10	2.14	2.21	2.28	2.23	2.28	2.35	2.43	2.35	2.40	2.48	2.56	2.45	2.50	2.59	2.68	2.54	2.59	2.68	2.77
		Amps	8.4	8.6	8.8	9.1	9.0	9.2	9.5	9.8	9.7	9.9	10.2	10.5	10.3	10.5	10.8	11.2	10.8	11.1	11.4	11.8	11.4	11.7	12.0	12.4
		HI PR	234	251	266	277	262	282	298	311	298	321	339	353	340	366	386	403	382	411	434	453	422	454	480	500
		LO PR	105	112	122	130	111	118	129	138	116	123	134	143	122	129	141	150	127	136	148	158	132	140	153	163
85	1062	MBh	31.2	31.8	33.4	35.6	30.5	31.1	32.6	34.8	29.8	30.4	31.8	33.9	29.1	29.6	31.0	33.1	27.6	28.1	29.5	31.4	25.6	26.1	27.3	29.1
		S/T	1.00	0.97	0.87	0.71	1.00	1.00	0.91	0.73	1.00	1.00	0.93	0.75	1.00	1.00	0.96	0.78	1.00	1.00	0.99	0.81	1.00	1.00	1.00	0.81
		Δ T	27	27	25	22	26	27	26	22	26	26	26	22	25	26	26	22	24	24	25	22	22	23	24	21
		kW	2.03	2.07	2.14	2.21	2.18	2.23	2.31	2.38	2.33	2.38	2.46	2.54	2.45	2.51	2.59	2.68	2.56	2.61	2.70	2.79	2.65	2.71	2.80	2.90
		Amps	8.8	8.9	9.2	9.5	9.4	9.6	9.8	10.2	10.1	10.3	10.6	11.0	10.7	10.9	11.3	11.6	11.3	11.6	11.9	12.3	11.9	12.2	12.6	13.0
		HI PR	246	264	279	291	276	297	313	327	314	337	356	372	357	384	406	423	402	432	457	476	444	478	505	526
		LO PR	111	118	129	137	117	125	136	145	122	129	141	151	128	136	148	158	134	143	156	166	139	147	161	171
	946	MBh	30.3	30.9	32.4	34.5	29.6	30.2	31.6	33.7	28.9	29.5	30.9	32.9	28.2	28.8	30.1	32.1	26.8	27.3	28.6	30.5	24.8	25.3	26.5	28.3
		S/T	0.96	0.92	0.83	0.68	0.99	0.96	0.86	0.70	1.00	0.98	0.89	0.72	1.00	1.00	0.91	0.74	1.00	1.00	0.95	0.77	1.00	1.00	0.96	0.78
		Δ T	28	28	26	23	29	28	27	23	28	28	27	23	27	28	27	23	26	27	26	23	24	25	25	21
		kW	2.01	2.05	2.12	2.19	2.17	2.21	2.29	2.36	2.31	2.36	2.44	2.52	2.43	2.48	2.57	2.65	2.53	2.59	2.68	2.77	2.62	2.68	2.78	2.87
		Amps	8.7	8.9	9.1	9.4	9.3	9.5	9.8	10.1	10.0	10.2	10.5	10.9	10.6	10.8	11.2	11.5	11.2	11.5	11.8	12.2	11.8	12.1	12.5	12.9
		HI PR	243	262	276	288	273	294	310	324	311	334	353	368	354	381	402	419	398	428	452	472	440	473	500	521
		LO PR	110	117	127	136	116	123	135	143	120	128	140	149	127	135	147	157	133	141	154	164	137	146	159	170
	830	MBh	28.0	28.5	29.9	31.9	27.3	27.9	29.2	31.1	26.7	27.2	28.5	30.4	26.0	26.5	27.8	29.7	24.7	25.2	26.4	28.2	22.9	23.4	24.5	26.1
		S/T	0.92	0.89	0.80	0.65	0.96	0.92	0.83	0.68	0.98	0.95	0.85	0.69	1.00	0.98	0.88	0.72	1.00	1.00	0.91	0.74	1.00	1.00	0.92	0.75
		Δ T	29	28	27	23	29	28	27	23	29	29	27	23	29	29	27	23	27	28	27	23	25	26	25	22
		kW	1.96	2.00	2.07	2.13	2.11	2.16	2.23	2.30	2.25	2.30	2.37	2.45	2.37	2.42	2.50	2.59	2.47	2.52	2.61	2.70	2.56	2.61	2.70	2.80
		Amps	8.5	8.7	8.9	9.2	9.1	9.3	9.5	9.8	9.8	10.0	10.3	10.6	10.3	10.6	10.9	11.3	10.9	11.2	11.5	11.9	11.5	11.8	12.1	12.6
		HI PR	236	254	268	280	265	285	301	314	301	324	342	357	343	369	390	407	386	415	439	457	426	459	485	505
		LO PR	106	113	124	132	112	120	131	139	117	124	136	145	123	131	143	152	129	137	149	159	133	142	155	165

IDB: Entering Indoor Dry Bulb Temperature

High and low pressures are measured at the liquid and suction service valves.

Shaded area reflects AHRI (TVA) conditions

kW = Total system power

Amps = outdoor unit amps (comp.+fan)

			Outdoor Ambient Temperature																							
			65ºF				75ºF				85ºF				95ºF				105ºF				115ºF			
			Entering Indoor Wet Bulb Temperature																							
IDB	Airflow		59	63	67	71	59	63	67	71	59	63	67	71	59	63	67	71	59	63	67	71	59	63	67	71
70	1366	MBh	36.4	37.7	41.3	-	35.5	36.8	40.3	-	34.7	35.9	39.4	-	33.8	35.1	38.4	-	32.1	33.3	36.5	-	29.8	30.9	33.8	-
		S/T	0.80	0.67	0.46	-	0.83	0.69	0.48	-	0.85	0.71	0.49	-	0.88	0.73	0.51	-	0.91	0.76	0.53	-	0.92	0.77	0.53	-
		Δ T	20	17	13	-	20	17	13	-	20	17	13	-	20	17	13	-	20	17	13	-	18	16	12	-
		kW	2.42	2.47	2.54	-	2.60	2.66	2.74	-	2.77	2.83	2.92	-	2.91	2.97	3.07	-	3.03	3.10	3.20	-	3.14	3.21	3.32	-
		Amps	11.1	11.4	11.7	-	11.9	12.1	12.4	-	12.7	13.0	13.3	-	13.4	13.7	14.1	-	14.2	14.5	14.9	-	14.9	15.2	15.6	-
		HI PR	224	241	254	-	251	270	285	-	286	307	325	-	325	350	370	-	366	394	416	-	404	435	460	-
		LO PR	112	119	130	-	118	126	137	-	123	131	143	-	129	137	150	-	135	144	157	-	140	149	163	-
	1217	MBh	35.3	36.6	40.1	-	34.5	35.8	39.2	-	33.7	34.9	38.2	-	32.8	34.0	37.3	-	31.2	32.3	35.4	-	28.9	30.0	32.8	-
		S/T	0.76	0.64	0.44	-	0.79	0.66	0.46	-	0.81	0.68	0.47	-	0.84	0.70	0.48	-	0.87	0.72	0.50	-	0.87	0.73	0.51	-
		Δ T	20	18	13	-	21	18	14	-	21	18	14	-	21	18	14	-	20	18	13	-	19	17	13	-
		kW	2.40	2.45	2.52	-	2.58	2.64	2.72	-	2.74	2.80	2.89	-	2.89	2.95	3.05	-	3.01	3.07	3.18	-	3.11	3.18	3.29	-
		Amps	11.1	11.3	11.6	-	11.8	12.0	12.3	-	12.6	12.9	13.2	-	13.3	13.6	14.0	-	14.1	14.3	14.8	-	14.8	15.1	15.5	-
		HI PR	222	238	252	-	249	268	283	-	283	304	321	-	322	347	366	-	362	390	412	-	400	431	455	-
		LO PR	111	118	129	-	117	125	136	-	122	129	141	-	128	136	148	-	134	143	156	-	139	147	161	-
	1067	MBh	32.6	33.8	37.0	-	31.8	33.0	36.2	-	31.1	32.2	35.3	-	30.3	31.4	34.4	-	28.8	29.9	32.7	-	26.7	27.7	30.3	-
		S/T	0.73	0.61	0.42	-	0.76	0.64	0.44	-	0.78	0.65	0.45	-	0.81	0.67	0.47	-	0.84	0.70	0.48	-	0.84	0.70	0.49	-
		Δ T	21	18	14	-	21	18	14	-	21	18	14	-	21	18	14	-	21	18	14	-	19	17	13	-
		kW	2.34	2.39	2.46	-	2.52	2.57	2.65	-	2.68	2.73	2.82	-	2.81	2.88	2.97	-	2.93	3.00	3.10	-	3.03	3.10	3.20	-
		Amps	10.8	11.0	11.3	-	11.5	11.7	12.1	-	12.3	12.6	12.9	-	13.0	13.3	13.7	-	13.7	14.0	14.4	-	14.4	14.7	15.1	-
		HI PR	215	231	244	-	241	260	274	-	274	295	312	-	312	336	355	-	351	378	399	-	388	418	441	-
		LO PR	108	114	125	-	114	121	132	-	118	126	137	-	124	132	144	-	130	138	151	-	134	143	156	-
75	1366	MBh	37.0	38.1	41.2	44.2	36.1	37.2	40.3	43.2	35.3	36.3	39.3	42.2	34.4	**35.4**	38.3	41.2	32.7	33.7	36.4	39.1	30.3	31.2	33.7	36.2
		S/T	0.91	0.81	0.61	0.40	0.94	0.84	0.64	0.41	0.96	0.86	0.65	0.42	1.00	**0.89**	0.67	0.43	1.00	0.92	0.70	0.45	1.00	0.93	0.71	0.45
		Δ T	23	21	17	12	23	21	17	12	23	21	17	12	23	**21**	17	12	22	21	17	12	20	20	16	11
		kW	2.44	2.49	2.57	2.65	2.62	2.68	2.77	2.86	2.79	2.85	2.94	3.04	2.93	**3.00**	3.10	3.20	3.06	3.13	3.23	3.34	3.17	3.24	3.34	3.46
		Amps	11.2	11.4	11.7	12.1	12.0	12.2	12.5	12.9	12.8	13.1	13.4	13.9	13.5	**13.8**	14.2	14.7	14.3	14.6	15.0	15.5	15.0	15.3	15.8	16.3
		HI PR	226	243	257	268	254	273	288	301	289	311	328	342	329	**354**	373	390	370	398	420	438	409	440	464	484
		LO PR	113	120	131	140	119	127	139	148	124	132	144	154	130	**139**	152	161	137	145	159	169	141	150	164	175
	1217	MBh	35.9	37.0	40.0	43.0	35.1	36.1	39.1	42.0	34.2	35.3	38.2	41.0	33.4	**34.4**	37.2	40.0	31.7	32.7	35.4	38.0	29.4	30.3	32.8	35.2
		S/T	0.87	0.77	0.59	0.38	0.90	0.80	0.61	0.39	0.92	0.82	0.62	0.40	0.95	**0.85**	0.64	0.41	0.99	0.88	0.67	0.43	0.99	0.89	0.67	0.43
		Δ T	23	22	18	12	24	22	18	12	24	22	18	12	24	**22**	18	12	24	22	18	12	22	20	17	12
		kW	2.42	2.47	2.55	2.63	2.60	2.66	2.74	2.83	2.77	2.83	2.92	3.01	2.91	**2.97**	3.07	3.17	3.03	3.10	3.20	3.31	3.14	3.21	3.32	3.43
		Amps	11.1	11.4	11.7	12.0	11.9	12.1	12.4	12.8	12.7	13.0	13.3	13.7	13.4	**13.7**	14.1	14.6	14.2	14.5	14.9	15.4	14.9	15.2	15.6	16.2
		HI PR	224	241	254	265	251	270	285	298	286	307	325	339	325	**350**	370	386	366	394	416	434	404	435	460	479
		LO PR	112	119	130	139	118	126	137	146	123	131	143	152	129	**137**	150	160	135	144	157	167	140	149	163	173
	1067	MBh	33.1	34.1	36.9	39.6	32.4	33.3	36.1	38.7	31.6	32.5	35.2	37.8	30.8	**31.7**	34.4	36.9	29.3	30.2	32.6	35.0	27.1	27.9	30.2	32.5
		S/T	0.83	0.75	0.57	0.36	0.87	0.77	0.59	0.38	0.89	0.79	0.60	0.39	0.92	**0.82**	0.62	0.40	0.95	0.85	0.64	0.41	0.96	0.86	0.65	0.42
		Δ T	24	22	18	12	24	22	18	13	24	22	18	13	24	**22**	18	13	24	22	18	12	22	21	17	12
		kW	2.36	2.41	2.48	2.56	2.54	2.59	2.68	2.76	2.70	2.76	2.85	2.94	2.84	**2.90**	2.99	3.09	2.96	3.02	3.12	3.23	3.06	3.13	3.23	3.34
		Amps	10.9	11.1	11.4	11.7	11.6	11.8	12.2	12.5	12.4	12.7	13.0	13.4	13.1	**13.4**	13.8	14.2	13.8	14.1	14.5	15.0	14.5	14.8	15.3	15.8
		HI PR	217	234	247	257	244	262	277	289	277	298	315	328	316	**340**	359	374	355	382	404	421	392	422	446	465
		LO PR	109	116	126	134	115	122	133	142	119	127	139	148	125	**133**	146	155	131	140	152	162	136	144	158	168

IDB: Entering Indoor Dry Bulb Temperature

Shaded area reflects ACCA (TVA) conditions

kW = Total system power

High and low pressures are measured at the liquid and suction service valves.

Amps = outdoor unit amps (comp.+fan)

Expanded Cooling Data — GPG1636***M41**

			Outdoor Ambient Temperature																							
			65ºF				75ºF				85ºF				95ºF				105ºF				115ºF			
			Entering Indoor Wet Bulb Temperature																							
IDB	Airflow		59	63	67	71	59	63	67	71	59	63	67	71	59	63	67	71	59	63	67	71	59	63	67	71
80	1366	MBh	37.6	38.5	41.1	43.9	36.8	37.6	40.1	42.9	35.9	36.7	39.2	41.9	35.0	35.8	38.2	40.9	33.3	34.0	36.3	38.8	30.8	31.5	33.6	36.0
		S/T	1.00	0.93	0.76	0.57	1.00	0.97	0.79	0.59	1.00	1.00	0.81	0.60	1.00	1.00	0.83	0.62	1.00	1.00	0.87	0.65	1.00	1.00	0.87	0.65
		Δ T	25	24	21	17	25	24	21	17	24	25	21	17	24	24	21	17	22	23	21	17	21	21	20	16
		kW	2.46	2.51	2.59	2.67	2.64	2.70	2.79	2.88	2.81	2.87	2.97	3.07	2.96	3.02	3.12	3.23	3.08	3.15	3.26	3.37	3.19	3.26	3.37	3.49
		Amps	11.3	11.5	11.8	12.2	12.0	12.3	12.6	13.0	12.9	13.2	13.5	14.0	13.6	13.9	14.3	14.8	14.4	14.7	15.1	15.6	15.1	15.4	15.9	16.4
		HI PR	228	246	260	271	256	276	291	304	291	314	331	345	332	357	377	393	373	402	424	443	413	444	469	489
		LO PR	114	122	133	141	121	128	140	149	125	133	146	155	132	140	153	163	138	147	160	171	143	152	166	177
	1217	MBh	36.6	37.3	39.9	42.7	35.7	36.5	39.0	41.7	34.9	35.6	38.0	40.7	34.0	34.7	**37.1**	39.7	32.3	33.0	35.3	37.7	29.9	30.6	32.7	34.9
		S/T	0.95	0.89	0.72	0.54	0.98	0.92	0.75	0.56	1.00	0.95	0.77	0.58	1.00	0.98	**0.80**	0.59	1.00	1.00	0.83	0.62	1.00	1.00	0.83	0.62
		Δ T	26	25	22	17	27	25	22	18	26	25	22	18	26	26	**22**	18	24	25	22	18	23	23	21	16
		kW	2.44	2.49	2.57	2.65	2.62	2.68	2.77	2.86	2.79	2.85	2.94	3.04	2.93	3.00	**3.10**	3.20	3.06	3.13	3.23	3.34	3.17	3.24	3.34	3.46
		Amps	11.2	11.4	11.7	12.1	12.0	12.2	12.5	12.9	12.8	13.1	13.4	13.9	13.5	13.8	**14.2**	14.7	14.3	14.6	15.0	15.5	15.0	15.3	15.8	16.3
		HI PR	226	243	257	268	254	273	288	301	289	311	328	342	329	354	**374**	390	370	398	420	438	409	440	464	484
		LO PR	113	120	131	140	120	127	139	148	124	132	144	154	130	139	**152**	161	137	145	159	169	141	150	164	175
	1067	MBh	33.7	34.5	36.8	39.4	33.0	33.7	36.0	38.5	32.2	32.9	35.1	37.5	31.4	32.1	34.3	36.6	29.8	30.5	32.5	34.8	27.6	28.2	30.1	32.2
		S/T	0.92	0.86	0.70	0.52	0.95	0.89	0.72	0.54	0.97	0.91	0.74	0.56	1.00	0.94	0.77	0.57	1.04	0.98	0.80	0.59	1.05	0.99	0.80	0.60
		Δ T	27	26	22	18	27	26	22	18	27	26	22	18	27	26	23	18	27	26	22	18	25	24	21	17
		kW	2.38	2.43	2.50	2.58	2.56	2.61	2.70	2.79	2.72	2.78	2.87	2.96	2.86	2.92	3.02	3.12	2.98	3.05	3.15	3.25	3.09	3.15	3.26	3.37
		Amps	11.0	11.2	11.5	11.8	11.7	11.9	12.2	12.6	12.5	12.8	13.1	13.5	13.2	13.5	13.9	14.3	13.9	14.2	14.6	15.1	14.6	15.0	15.4	15.9
		HI PR	219	236	249	260	246	265	280	292	280	301	318	332	319	343	362	378	359	386	408	425	396	426	450	470
		LO PR	110	117	127	136	116	123	135	143	120	128	140	149	127	135	147	157	133	141	154	164	137	146	159	170
85	1366	MBh	38.3	39.0	40.9	43.6	37.4	38.1	39.9	42.6	36.5	37.2	39.0	41.6	35.6	36.3	38.0	40.6	33.9	34.5	36.1	38.6	31.4	32.0	33.5	35.7
		S/T	1.00	1.00	0.91	0.74	1.00	1.00	0.94	0.76	1.00	1.00	0.97	0.78	1.00	1.00	1.00	0.81	1.00	1.00	1.00	0.84	1.00	1.00	1.00	0.85
		Δ T	26	26	25	22	25	26	25	22	25	25	25	22	24	24	26	22	23	23	24	22	21	22	23	20
		kW	2.47	2.53	2.61	2.69	2.67	2.72	2.81	2.90	2.83	2.90	2.99	3.09	2.98	3.05	3.15	3.26	3.11	3.18	3.29	3.40	3.22	3.29	3.40	3.52
		Amps	11.4	11.6	11.9	12.3	12.1	12.4	12.7	13.1	13.0	13.3	13.6	14.1	13.8	14.0	14.4	14.9	14.5	14.8	15.2	15.7	15.2	15.6	16.0	16.5
		HI PR	231	248	262	273	259	279	294	307	294	317	335	349	335	361	381	397	377	406	429	447	417	448	474	494
		LO PR	115	123	134	143	122	130	142	151	127	135	147	157	133	142	155	165	139	148	162	173	144	153	168	178
	1217	MBh	37.2	37.9	39.7	42.4	36.3	37.0	38.8	41.4	35.5	36.1	37.9	40.4	34.6	35.3	36.9	39.4	32.9	33.5	35.1	37.4	30.4	31.0	32.5	34.7
		S/T	1.00	0.96	0.87	0.70	1.00	1.00	0.90	0.73	1.00	1.00	0.92	0.75	1.00	1.00	0.95	0.77	1.00	1.00	0.99	0.80	1.00	1.00	1.00	0.81
		Δ T	28	28	26	23	27	28	26	23	27	27	26	23	26	27	27	23	25	25	26	23	23	23	24	21
		kW	2.46	2.51	2.59	2.67	2.64	2.70	2.79	2.88	2.81	2.87	2.97	3.07	2.96	3.02	3.12	3.23	3.08	3.15	3.26	3.37	3.19	3.26	3.37	3.49
		Amps	11.3	11.5	11.8	12.2	12.0	12.3	12.6	13.0	12.9	13.2	13.5	14.0	13.6	13.9	14.3	14.8	14.4	14.7	15.1	15.6	15.1	15.4	15.9	16.4
		HI PR	228	246	260	271	256	276	291	304	291	314	331	345	332	357	377	393	373	402	424	443	413	444	469	489
		LO PR	114	122	133	141	121	128	140	149	125	133	146	155	132	140	153	163	138	147	160	171	143	152	166	177
	1067	MBh	34.3	35.0	36.6	39.1	33.5	34.2	35.8	38.2	32.7	33.4	34.9	37.3	31.9	32.5	34.1	36.4	30.3	30.9	32.4	34.5	28.1	28.6	30.0	32.0
		S/T	0.96	0.93	0.84	0.68	0.99	0.96	0.87	0.70	1.00	0.98	0.89	0.72	1.00	1.00	0.92	0.74	1.00	1.00	0.95	0.77	1.00	1.00	0.96	0.78
		Δ T	28	28	26	23	29	28	27	23	28	28	27	23	28	28	27	23	26	27	27	23	24	25	25	21
		kW	2.40	2.45	2.52	2.60	2.58	2.64	2.72	2.81	2.74	2.80	2.89	2.99	2.89	2.95	3.05	3.15	3.01	3.07	3.17	3.28	3.11	3.18	3.29	3.40
		Amps	11.1	11.3	11.6	11.9	11.8	12.0	12.3	12.7	12.6	12.9	13.2	13.6	13.3	13.6	14.0	14.4	14.0	14.3	14.8	15.2	14.8	15.1	15.5	16.0
		HI PR	222	238	252	263	249	268	282	295	283	304	321	335	322	347	366	382	362	390	412	429	400	431	455	474
		LO PR	111	118	129	137	117	125	136	145	122	129	141	151	128	136	148	158	134	143	156	166	139	147	161	171

IDB: Entering Indoor Dry Bulb Temperature

High and low pressures are measured at the liquid and suction service valves.

Shaded area reflects AHRI (TVA) conditions

kW = Total system power

Amps = outdoor unit amps (comp.+fan)

			Outdoor Ambient Temperature																							
			65ºF				75ºF				85ºF				95ºF				105ºF				115ºF			
			Entering Indoor Wet Bulb Temperature																							
IDB	Airflow		59	63	67	71	59	63	67	71	59	63	67	71	59	63	67	71	59	63	67	71	59	63	67	71
70	1410	MBh	42.8	44.3	48.6	-	41.8	43.3	47.4	-	40.8	42.3	46.3	-	39.8	41.2	45.2	-	37.8	39.2	42.9	-	35.0	36.3	39.7	-
		S/T	0.75	0.62	0.43	-	0.77	0.65	0.45	-	0.79	0.66	0.46	-	0.82	0.68	0.47	-	0.85	0.71	0.49	-	0.86	0.72	0.50	-
		Δ T	21	18	14	-	21	18	14	-	21	18	14	-	21	18	14	-	21	18	14	-	20	17	13	-
		kW	2.76	2.82	2.91	-	2.98	3.04	3.14	-	3.16	3.23	3.34	-	3.33	3.40	3.52	-	3.47	3.55	3.67	-	3.59	3.67	3.80	-
		Amps	12.2	12.4	12.8	-	13.0	13.3	13.7	-	14.0	14.3	14.7	-	14.8	15.1	15.6	-	15.6	16.0	16.5	-	16.5	16.8	17.3	-
		HI PR	239	257	272	-	268	289	305	-	305	328	347	-	347	374	395	-	391	420	444	-	432	465	491	-
		LO PR	109	116	126	-	115	122	134	-	119	127	139	-	125	134	146	-	132	140	153	-	136	145	158	-
	1255	MBh	41.5	43.0	47.1	-	40.5	42.0	46.0	-	39.6	41.0	44.9	-	38.6	40.0	43.8	-	36.7	38.0	41.7	-	34.0	35.2	38.6	-
		S/T	0.71	0.59	0.41	-	0.74	0.62	0.43	-	0.76	0.63	0.44	-	0.78	0.65	0.45	-	0.81	0.68	0.47	-	0.82	0.68	0.47	-
		Δ T	22	19	14	-	22	19	14	-	22	19	14	-	22	19	15	-	22	19	14	-	20	18	13	-
		kW	2.74	2.80	2.89	-	2.95	3.02	3.11	-	3.14	3.21	3.31	-	3.30	3.38	3.49	-	3.44	3.52	3.64	-	3.56	3.64	3.76	-
		Amps	12.1	12.3	12.7	-	12.9	13.2	13.6	-	13.9	14.2	14.6	-	14.7	15.0	15.4	-	15.5	15.9	16.3	-	16.3	16.7	17.2	-
		HI PR	237	255	269	-	265	286	302	-	302	325	343	-	344	370	391	-	387	416	440	-	427	460	486	-
		LO PR	108	115	125	-	114	121	132	-	118	126	137	-	124	132	144	-	130	139	151	-	135	143	156	-
	1101	MBh	38.3	39.7	43.5	-	37.4	38.8	42.5	-	36.5	37.9	41.5	-	35.6	36.9	40.5	-	33.9	35.1	38.4	-	31.4	32.5	35.6	-
		S/T	0.69	0.57	0.40	-	0.71	0.59	0.41	-	0.73	0.61	0.42	-	0.75	0.63	0.44	-	0.78	0.65	0.45	-	0.79	0.66	0.46	-
		Δ T	22	19	14	-	22	19	15	-	22	19	15	-	22	19	15	-	22	19	15	-	21	18	14	-
		kW	2.68	2.73	2.82	-	2.88	2.94	3.04	-	3.06	3.13	3.23	-	3.22	3.29	3.40	-	3.36	3.43	3.54	-	3.47	3.55	3.67	-
		Amps	11.8	12.0	12.4	-	12.6	12.9	13.2	-	13.5	13.8	14.2	-	14.3	14.6	15.1	-	15.1	15.5	15.9	-	15.9	16.3	16.8	-
		HI PR	229	247	261	-	258	277	293	-	293	315	333	-	334	359	379	-	375	404	426	-	415	446	471	-
		LO PR	104	111	121	-	110	117	128	-	115	122	133	-	121	128	140	-	126	134	147	-	131	139	152	-
75	1410	MBh	43.5	44.8	48.5	52.0	42.5	43.7	47.3	50.8	41.5	42.7	46.2	49.6	40.4	**41.6**	45.1	48.4	38.4	39.6	42.8	46.0	35.6	36.6	39.7	42.6
		S/T	0.85	0.76	0.57	0.37	0.88	0.79	0.60	0.38	0.90	0.81	0.61	0.39	0.93	**0.83**	0.63	0.41	0.97	0.86	0.65	0.42	0.97	0.87	0.66	0.42
		Δ T	24	22	18	13	24	22	18	13	24	22	18	13	25	**23**	19	13	24	22	18	13	23	21	17	12
		kW	2.79	2.85	2.94	3.03	3.00	3.07	3.16	3.27	3.19	3.26	3.37	3.48	3.36	**3.43**	3.55	3.66	3.50	3.58	3.70	3.82	3.62	3.70	3.83	3.96
		Amps	12.3	12.5	12.9	13.3	13.1	13.4	13.8	14.2	14.1	14.4	14.8	15.3	14.9	**15.3**	15.7	16.2	15.8	16.1	16.6	17.2	16.6	17.0	17.5	18.1
		HI PR	241	260	274	286	271	291	308	321	308	332	350	365	351	**378**	399	416	395	425	449	468	436	469	496	517
		LO PR	110	117	128	136	116	124	135	144	121	128	140	149	127	**135**	147	157	133	141	154	164	137	146	160	170
	1255	MBh	42.2	43.5	47.0	50.5	41.2	42.5	45.9	49.3	40.2	41.4	44.9	48.1	39.3	**40.4**	43.8	47.0	37.3	38.4	41.6	44.6	34.6	35.6	38.5	41.3
		S/T	0.81	0.72	0.55	0.35	0.84	0.75	0.57	0.37	0.86	0.77	0.58	0.37	0.89	**0.79**	0.60	0.39	0.92	0.82	0.62	0.40	0.93	0.83	0.63	0.40
		Δ T	25	23	19	13	25	23	19	13	25	23	19	13	26	**24**	19	13	25	23	19	13	24	22	18	12
		kW	2.76	2.82	2.91	3.01	2.98	3.04	3.14	3.24	3.16	3.23	3.34	3.45	3.33	**3.40**	3.52	3.63	3.47	3.55	3.67	3.79	3.59	3.67	3.80	3.93
		Amps	12.2	12.4	12.8	13.2	13.0	13.3	13.7	14.1	14.0	14.3	14.7	15.2	14.8	**15.1**	15.6	16.1	15.7	16.0	16.5	17.0	16.5	16.8	17.3	17.9
		HI PR	239	257	272	283	268	289	305	318	305	328	347	362	347	**374**	395	412	391	421	444	463	432	465	491	512
		LO PR	109	116	126	135	115	122	134	142	119	127	139	148	126	**134**	146	155	132	140	153	163	136	145	158	168
	1101	MBh	39.0	40.1	43.4	46.6	38.1	39.2	42.4	45.5	37.2	38.3	41.4	44.4	36.2	**37.3**	40.4	43.4	34.4	35.5	38.4	41.2	31.9	32.8	35.5	38.1
		S/T	0.78	0.70	0.53	0.34	0.81	0.72	0.55	0.35	0.83	0.74	0.56	0.36	0.86	**0.77**	0.58	0.37	0.89	0.79	0.60	0.39	0.90	0.80	0.61	0.39
		Δ T	25	23	19	13	26	24	19	13	26	24	19	13	26	**24**	20	13	26	24	19	13	24	22	18	12
		kW	2.70	2.75	2.84	2.93	2.90	2.97	3.06	3.16	3.09	3.15	3.26	3.36	3.25	**3.32**	3.43	3.54	3.38	3.46	3.57	3.69	3.50	3.58	3.70	3.82
		Amps	11.9	12.1	12.5	12.9	12.7	13.0	13.3	13.8	13.6	13.9	14.3	14.8	14.5	**14.8**	15.2	15.7	15.3	15.6	16.1	16.6	16.1	16.4	16.9	17.5
		HI PR	232	249	263	275	260	280	296	308	296	318	336	351	337	**363**	383	399	379	408	431	449	419	451	476	496
		LO PR	106	112	123	131	112	119	130	138	116	123	135	143	122	**130**	141	151	128	136	148	158	132	140	153	163

IDB: Entering Indoor Dry Bulb Temperature

Shaded area reflects ACCA (TVA) conditions

kW = Total system power

High and low pressures are measured at the liquid and suction service valves.

Amps = outdoor unit amps (comp.+fan)

Expanded Cooling Data — GPG1642***M41**

			Outdoor Ambient Temperature																							
			65ºF				75ºF				85ºF				95ºF				105ºF				115ºF			
			Entering Indoor Wet Bulb Temperature																							
IDB	Airflow		59	63	67	71	59	63	67	71	59	63	67	71	59	63	67	71	59	63	67	71	59	63	67	71
80	1410	MBh	44.3	45.2	48.3	51.6	43.2	44.2	47.2	50.4	42.2	43.1	46.1	49.2	41.2	42.1	44.9	48.0	39.1	40.0	42.7	45.6	36.2	37.0	39.5	42.3
		S/T	0.93	0.87	0.71	0.53	0.96	0.90	0.74	0.55	1.00	0.93	0.75	0.56	1.00	0.96	0.78	0.58	1.00	1.00	0.81	0.60	1.00	1.00	0.82	0.61
		Δ T	27	26	22	18	27	26	23	18	28	26	23	18	27	26	23	18	26	26	23	18	24	24	21	17
		kW	2.81	2.87	2.96	3.05	3.03	3.09	3.19	3.30	3.22	3.29	3.40	3.51	3.39	3.46	3.58	3.70	3.53	3.61	3.73	3.86	3.65	3.74	3.86	3.99
		Amps	12.4	12.6	13.0	13.4	13.2	13.5	13.9	14.3	14.2	14.5	14.9	15.4	15.1	15.4	15.8	16.4	15.9	16.3	16.7	17.3	16.7	17.1	17.6	18.2
		HI PR	244	262	277	289	274	294	311	324	311	335	354	369	354	381	403	420	399	429	453	473	441	474	501	522
		LO PR	111	118	129	137	117	125	136	145	122	130	142	151	128	136	149	158	134	143	156	166	139	148	161	172
	1255	MBh	43.0	43.9	46.9	50.1	42.0	42.9	45.8	49.0	41.0	41.9	44.7	47.8	40.0	40.8	**43.6**	46.6	38.0	38.8	41.4	44.3	35.2	35.9	38.4	41.0
		S/T	0.89	0.83	0.68	0.51	0.92	0.86	0.70	0.52	0.94	0.88	0.72	0.54	0.97	0.91	**0.74**	0.56	1.00	0.95	0.77	0.58	1.00	0.96	0.78	0.58
		Δ T	28	27	23	19	28	27	24	19	28	27	24	19	28	27	**24**	19	28	27	23	19	26	25	22	17
		kW	2.79	2.85	2.94	3.03	3.00	3.07	3.16	3.27	3.19	3.26	3.37	3.48	3.36	3.43	**3.55**	3.67	3.50	3.58	3.70	3.82	3.62	3.71	3.83	3.96
		Amps	12.3	12.5	12.9	13.3	13.1	13.4	13.8	14.2	14.1	14.4	14.8	15.3	14.9	15.3	**15.7**	16.2	15.8	16.1	16.6	17.2	16.6	17.0	17.5	18.1
		HI PR	241	260	274	286	271	292	308	321	308	332	350	365	351	378	**399**	416	395	425	449	468	436	469	496	517
		LO PR	110	117	128	136	116	124	135	144	121	128	140	149	127	135	**147**	157	133	141	154	164	137	146	160	170
	1101	MBh	39.7	40.5	43.3	46.3	38.7	39.6	42.3	45.2	37.8	38.6	41.3	44.1	36.9	37.7	40.3	43.1	35.0	35.8	38.3	40.9	32.5	33.2	35.4	37.9
		S/T	0.86	0.80	0.65	0.49	0.89	0.83	0.68	0.51	0.91	0.85	0.69	0.52	0.94	0.88	0.72	0.54	0.97	0.91	0.74	0.56	0.98	0.92	0.75	0.56
		Δ T	28	27	24	19	29	27	24	19	29	28	24	19	29	28	24	19	28	27	24	19	27	26	22	18
		kW	2.72	2.78	2.86	2.96	2.93	2.99	3.09	3.19	3.11	3.18	3.28	3.39	3.27	3.35	3.46	3.57	3.41	3.49	3.60	3.73	3.53	3.61	3.73	3.86
		Amps	12.0	12.2	12.6	13.0	12.8	13.1	13.4	13.9	13.8	14.0	14.5	14.9	14.6	14.9	15.3	15.8	15.4	15.7	16.2	16.7	16.2	16.6	17.1	17.6
		HI PR	234	252	266	278	263	283	299	311	299	322	340	354	340	366	387	403	383	412	435	454	423	455	481	501
		LO PR	107	113	124	132	113	120	131	139	117	125	136	145	123	131	143	152	129	137	150	159	133	142	155	165
85	1410	MBh	45.0	45.9	48.1	51.3	44.0	44.8	47.0	50.1	42.9	43.8	45.8	48.9	41.9	42.7	44.7	47.7	39.8	40.6	42.5	45.3	36.9	37.6	39.3	42.0
		S/T	0.98	0.94	0.85	0.69	1.00	0.98	0.88	0.71	1.00	1.00	0.90	0.73	1.00	1.00	0.93	0.76	1.00	1.00	0.97	0.78	1.00	1.00	0.98	0.79
		Δ T	29	28	27	23	29	29	27	23	28	29	27	23	27	28	27	24	26	26	27	23	24	25	25	22
		kW	2.83	2.89	2.98	3.08	3.05	3.12	3.22	3.32	3.24	3.32	3.42	3.54	3.41	3.49	3.61	3.73	3.56	3.64	3.76	3.89	3.68	3.77	3.89	4.03
		Amps	12.5	12.7	13.1	13.5	13.3	13.6	14.0	14.4	14.3	14.6	15.0	15.5	15.2	15.5	16.0	16.5	16.0	16.4	16.9	17.5	16.9	17.3	17.8	18.4
		HI PR	246	265	280	292	276	297	314	328	314	338	357	372	358	385	407	424	403	433	458	477	445	479	506	527
		LO PR	112	119	130	139	118	126	138	147	123	131	143	152	129	138	150	160	136	144	157	168	140	149	163	173
	1255	MBh	43.7	44.6	46.7	49.8	42.7	43.5	45.6	48.6	41.7	42.5	44.5	47.5	40.7	41.5	43.4	46.3	38.6	39.4	41.2	44.0	35.8	36.5	38.2	40.8
		S/T	0.93	0.90	0.81	0.66	0.96	0.93	0.84	0.68	0.99	0.95	0.86	0.70	1.00	0.98	0.89	0.72	1.00	1.00	0.92	0.75	1.00	1.00	0.93	0.75
		Δ T	30	29	28	24	30	30	28	24	30	30	28	24	30	30	28	24	28	29	28	24	26	27	26	23
		kW	2.81	2.87	2.96	3.05	3.03	3.09	3.19	3.30	3.22	3.29	3.40	3.51	3.39	3.46	3.58	3.70	3.53	3.61	3.73	3.86	3.65	3.74	3.86	3.99
		Amps	12.4	12.6	13.0	13.4	13.2	13.5	13.9	14.3	14.2	14.5	14.9	15.4	15.1	15.4	15.8	16.4	15.9	16.3	16.7	17.3	16.7	17.1	17.6	18.2
		HI PR	244	262	277	289	274	294	311	324	311	335	354	369	354	381	403	420	399	429	453	473	441	474	501	522
		LO PR	111	118	129	137	117	125	136	145	122	130	142	151	128	136	149	158	134	143	156	166	139	148	161	172
	1101	MBh	40.3	41.1	43.1	46.0	39.4	40.2	42.1	44.9	38.5	39.2	41.1	43.8	37.5	38.3	40.1	42.7	35.7	36.3	38.1	40.6	33.0	33.7	35.3	37.6
		S/T	0.90	0.87	0.78	0.63	0.93	0.90	0.81	0.66	0.95	0.92	0.83	0.67	0.98	0.95	0.86	0.70	1.00	0.99	0.89	0.72	1.00	0.99	0.90	0.73
		Δ T	30	30	28	24	31	30	28	25	31	30	28	25	31	30	29	25	30	30	28	24	28	28	26	23
		kW	2.74	2.80	2.89	2.98	2.95	3.02	3.11	3.21	3.14	3.21	3.31	3.42	3.30	3.37	3.49	3.60	3.44	3.52	3.63	3.76	3.56	3.64	3.76	3.89
		Amps	12.1	12.3	12.7	13.1	12.9	13.2	13.5	14.0	13.9	14.2	14.6	15.0	14.7	15.0	15.4	16.0	15.5	15.9	16.3	16.9	16.3	16.7	17.2	17.8
		HI PR	237	255	269	280	265	286	302	315	302	325	343	358	344	370	391	407	387	416	439	458	427	460	486	506
		LO PR	108	115	125	133	114	121	132	141	118	126	137	146	124	132	144	154	130	138	151	161	135	143	156	167

IDB: Entering Indoor Dry Bulb Temperature

Shaded area reflects AHRI (TVA) conditions

kW = Total system power

High and low pressures are measured at the liquid and suction service valves.

Amps = outdoor unit amps (comp.+fan)

EXPANDED COOLING DATA — GPG1648***M41**

			Outdoor Ambient Temperature																							
			65ºF				75ºF				85ºF				95ºF				105ºF				115ºF			
			Entering Indoor Wet Bulb Temperature																							
IDB	Airflow		59	63	67	71	59	63	67	71	59	63	67	71	59	63	67	71	59	63	67	71	59	63	67	71
70	1443	MBh	46.2	47.9	52.5	-	45.1	46.8	51.3	-	44.1	45.7	50.0	-	43.0	44.6	48.8	-	40.8	42.3	46.4	-	37.8	39.2	43.0	-
		S/T	0.72	0.60	0.42	-	0.75	0.62	0.43	-	0.77	0.64	0.44	-	0.79	0.66	0.46	-	0.82	0.69	0.47	-	0.83	0.69	0.48	-
		Δ T	21	18	14	-	21	19	14	-	21	19	14	-	22	19	14	-	21	18	14	-	20	17	13	-
		kW	3.05	3.11	3.21	-	3.28	3.35	3.46	-	3.49	3.56	3.68	-	3.67	3.75	3.87	-	3.83	3.91	4.04	-	3.96	4.05	4.18	-
		Amps	14.3	14.6	15.0	-	15.3	15.6	16.1	-	16.4	16.8	17.3	-	17.4	17.8	18.3	-	18.4	18.8	19.3	-	19.3	19.7	20.3	-
		HI PR	239	257	271	-	268	288	304	-	305	328	346	-	347	373	394	-	390	420	443	-	431	464	490	-
		LO PR	106	113	123	-	112	119	130	-	116	124	135	-	122	130	142	-	128	136	149	-	132	141	154	-
	1286	MBh	44.9	46.5	51.0	-	43.8	45.4	49.8	-	42.8	44.3	48.6	-	41.7	43.3	47.4	-	39.7	41.1	45.0	-	36.7	38.1	41.7	-
		S/T	0.69	0.57	0.40	-	0.71	0.59	0.41	-	0.73	0.61	0.42	-	0.75	0.63	0.44	-	0.78	0.65	0.45	-	0.79	0.66	0.46	-
		Δ T	22	19	14		22	19	15	-	22	19	15	-	23	19	15	-	22	19	15	-	21	18	14	-
		kW	3.02	3.09	3.18	-	3.25	3.32	3.43	-	3.46	3.53	3.65	-	3.64	3.72	3.84	-	3.79	3.88	4.01	-	3.93	4.01	4.15	-
		Amps	14.2	14.5	14.9	-	15.2	15.5	15.9	-	16.3	16.6	17.1	-	17.3	17.6	18.1	-	18.2	18.6	19.2	-	19.2	19.6	20.2	-
		HI PR	236	254	269	-	265	285	301	-	302	325	343	-	343	370	390	-	386	416	439	-	427	459	485	-
		LO PR	105	111	122	-	111	118	129	-	115	122	134	-	121	129	140	-	127	135	147	-	131	139	152	-
	1128	MBh	41.4	42.9	47.0	-	40.4	41.9	45.9	-	39.5	40.9	44.8	-	38.5	39.9	43.7	-	36.6	37.9	41.6	-	33.9	35.1	38.5	-
		S/T	0.66	0.55	0.38	-	0.69	0.57	0.40	-	0.70	0.59	0.41	-	0.73	0.61	0.42	-	0.75	0.63	0.44	-	0.76	0.64	0.44	-
		Δ T	22	19	15	-	23	20	15	-	23	20	15	-	23	20	15	-	23	19	15	-	21	18	14	-
		kW	2.95	3.01	3.11	-	3.18	3.24	3.35	-	3.37	3.45	3.56	-	3.55	3.63	3.75	-	3.70	3.78	3.91	-	3.83	3.91	4.04	-
		Amps	13.9	14.2	14.6	-	14.8	15.1	15.6	-	15.9	16.2	16.7	-	16.9	17.2	17.7	-	17.8	18.2	18.7	-	18.7	19.1	19.7	-
		HI PR	229	247	260	-	257	277	292	-	293	315	332	-	333	359	379	-	375	403	426	-	414	446	471	-
		LO PR	102	108	118	-	107	114	125	-	112	119	130	-	117	125	136	-	123	131	143	-	127	135	148	-
75	1443	MBh	47.0	48.4	52.4	56.2	45.9	47.3	51.2	54.9	44.8	46.1	49.9	53.6	43.7	**45.0**	48.7	52.3	41.5	42.8	46.3	49.7	38.5	39.6	42.9	46.0
		S/T	0.82	0.73	0.55	0.36	0.85	0.76	0.57	0.37	0.87	0.78	0.59	0.38	0.90	**0.80**	0.61	0.39	0.93	0.83	0.63	0.41	0.94	0.84	0.64	0.41
		Δ T	25	23	19	13	25	23	19	13	25	23	19	13	25	**23**	19	13	25	23	19	13	23	21	17	12
		kW	3.07	3.14	3.24	3.34	3.31	3.38	3.49	3.60	3.52	3.59	3.71	3.83	3.70	**3.78**	3.91	4.04	3.86	3.94	4.08	4.21	3.99	4.08	4.22	4.36
		Amps	14.5	14.7	15.1	15.6	15.4	15.7	16.2	16.7	16.6	16.9	17.4	18.0	17.5	**17.9**	18.4	19.0	18.5	18.9	19.5	20.1	19.5	19.9	20.5	21.2
		HI PR	241	259	274	286	271	291	307	321	308	331	350	365	350	**377**	398	415	394	424	448	467	436	469	495	516
		LO PR	107	114	124	132	113	120	131	140	117	125	136	145	123	**131**	143	152	129	137	150	160	134	142	155	165
	1286	MBh	45.6	47.0	50.8	54.6	44.6	45.9	49.7	53.3	43.5	44.8	48.5	52.0	42.4	**43.7**	47.3	50.8	40.3	41.5	44.9	48.2	37.4	38.5	41.6	44.7
		S/T	0.78	0.70	0.53	0.34	0.81	0.72	0.55	0.35	0.83	0.74	0.56	0.36	0.86	**0.77**	0.58	0.37	0.89	0.80	0.60	0.39	0.90	0.80	0.61	0.39
		Δ T	25	23	19	13	26	24	19	13	26	24	19	13	26	**24**	20	14	26	24	19	13	24	22	18	12
		kW	3.05	3.11	3.21	3.31	3.28	3.35	3.46	3.57	3.49	3.56	3.68	3.80	3.67	**3.75**	3.88	4.01	3.83	3.91	4.04	4.18	3.96	4.05	4.18	4.33
		Amps	14.3	14.6	15.0	15.5	15.3	15.6	16.1	16.6	16.4	16.8	17.3	17.8	17.4	**17.8**	18.3	18.9	18.4	18.8	19.3	20.0	19.3	19.7	20.3	21.0
		HI PR	239	257	271	283	268	288	304	317	305	328	346	361	347	**373**	394	411	390	420	444	463	431	464	490	511
		LO PR	106	113	123	131	112	119	130	138	116	124	135	144	122	**130**	142	151	128	136	149	158	132	141	154	164
	1128	MBh	42.1	43.4	46.9	50.4	41.1	42.4	45.8	49.2	40.2	41.3	44.8	48.0	39.2	**40.3**	43.7	46.9	37.2	38.3	41.5	44.5	34.5	35.5	38.4	41.2
		S/T	0.75	0.67	0.51	0.33	0.78	0.70	0.53	0.34	0.80	0.72	0.54	0.35	0.83	**0.74**	0.56	0.36	0.86	0.77	0.58	0.37	0.86	0.77	0.59	0.38
		Δ T	26	24	20	13	26	24	20	14	26	24	20	14	26	**24**	20	14	26	24	20	14	24	22	18	13
		kW	2.97	3.04	3.13	3.23	3.20	3.27	3.37	3.48	3.40	3.48	3.59	3.71	3.58	**3.66**	3.78	3.90	3.73	3.81	3.94	4.07	3.86	3.95	4.08	4.22
		Amps	14.0	14.3	14.7	15.1	15.0	15.3	15.7	16.2	16.0	16.4	16.8	17.4	17.0	**17.3**	17.8	18.4	17.9	18.3	18.8	19.5	18.8	19.3	19.8	20.5
		HI PR	232	249	263	274	260	280	295	308	295	318	336	350	337	**362**	382	399	379	407	430	449	418	450	475	496
		LO PR	103	109	119	127	108	115	126	134	113	120	131	139	118	**126**	138	146	124	132	144	153	128	137	149	159

IDB: Entering Indoor Dry Bulb Temperature

Shaded area reflects ACCA (TVA) conditions

kW = Total system power

High and low pressures are measured at the liquid and suction service valves.

Amps = outdoor unit amps (comp.+fan)

Expanded Cooling Data — GPG1648***M41**

			Outdoor Ambient Temperature																							
			65ºF				75ºF				85ºF				95ºF				105ºF				115ºF			
			Entering Indoor Wet Bulb Temperature																							
IDB	Airflow		59	63	67	71	59	63	67	71	59	63	67	71	59	63	67	71	59	63	67	71	59	63	67	71
80	1443	MBh	47.8	48.9	52.2	55.8	46.7	47.7	51.0	54.5	45.6	46.6	49.8	53.2	44.5	45.5	48.6	51.9	42.3	43.2	46.1	49.3	39.2	40.0	42.7	45.7
		S/T	0.90	0.84	0.69	0.51	0.93	0.87	0.71	0.53	0.95	0.90	0.73	0.54	1.00	0.92	0.75	0.56	1.00	0.96	0.78	0.58	1.00	0.97	0.79	0.59
		Δ T	27	26	23	18	28	27	23	18	28	27	23	18	28	27	23	19	27	26	23	18	25	25	21	17
		kW	3.10	3.16	3.26	3.37	3.33	3.41	3.52	3.63	3.55	3.62	3.74	3.87	3.73	3.82	3.94	4.07	3.89	3.98	4.11	4.25	4.03	4.12	4.26	4.40
		Amps	14.6	14.9	15.3	15.7	15.6	15.9	16.3	16.8	16.7	17.0	17.5	18.1	17.7	18.1	18.6	19.2	18.7	19.1	19.6	20.3	19.6	20.1	20.7	21.4
		HI PR	244	262	277	289	273	294	311	324	311	334	353	368	354	381	402	420	398	429	453	472	440	473	500	521
		LO PR	108	115	125	134	114	121	132	141	119	126	138	147	125	132	145	154	131	139	152	161	135	144	157	167
	1286	MBh	46.4	47.5	50.7	54.2	45.4	46.3	49.5	52.9	44.3	45.2	48.3	51.7	43.2	44.1	**47.2**	50.4	41.0	41.9	44.8	47.9	38.0	38.8	41.5	44.4
		S/T	0.86	0.80	0.65	0.49	0.89	0.83	0.68	0.51	0.91	0.85	0.70	0.52	0.94	0.88	**0.72**	0.54	0.98	0.92	0.74	0.56	0.98	0.92	0.75	0.56
		Δ T	28	27	24	19	29	28	24	19	29	28	24	19	29	28	**24**	19	29	27	24	19	27	26	22	18
		kW	3.07	3.14	3.24	3.34	3.31	3.38	3.49	3.60	3.52	3.59	3.71	3.83	3.70	3.78	**3.91**	4.04	3.86	3.94	4.08	4.21	3.99	4.08	4.22	4.36
		Amps	14.5	14.7	15.1	15.6	15.4	15.7	16.2	16.7	16.6	16.9	17.4	18.0	17.5	17.9	**18.4**	19.0	18.5	18.9	19.5	20.1	19.5	19.9	20.5	21.2
		HI PR	241	259	274	286	271	291	307	321	308	331	350	365	350	377	**398**	415	394	424	448	467	436	469	495	516
		LO PR	107	114	124	132	113	120	131	140	117	125	136	145	123	131	**143**	153	129	137	150	160	134	142	155	165
	1128	MBh	42.9	43.8	46.8	50.0	41.9	42.8	45.7	48.9	40.9	41.8	44.6	47.7	39.9	40.7	43.5	46.5	37.9	38.7	41.4	44.2	35.1	35.9	38.3	40.9
		S/T	0.83	0.78	0.63	0.47	0.86	0.80	0.65	0.49	0.88	0.82	0.67	0.50	0.91	0.85	0.69	0.52	0.94	0.88	0.72	0.54	0.95	0.89	0.72	0.54
		Δ T	29	28	24	19	29	28	24	19	29	28	24	19	29	28	25	20	29	28	24	19	27	26	23	18
		kW	3.00	3.06	3.16	3.26	3.23	3.30	3.40	3.51	3.43	3.51	3.62	3.74	3.61	3.69	3.81	3.94	3.76	3.85	3.97	4.11	3.89	3.98	4.11	4.25
		Amps	14.1	14.4	14.8	15.3	15.1	15.4	15.8	16.3	16.2	16.5	17.0	17.5	17.1	17.5	18.0	18.6	18.1	18.5	19.0	19.6	19.0	19.4	20.0	20.7
		HI PR	234	252	266	277	262	282	298	311	298	321	339	354	340	366	386	403	382	412	435	453	423	455	480	501
		LO PR	104	110	120	128	110	117	127	136	114	121	132	141	120	127	139	148	125	133	146	155	130	138	151	160
85	1443	MBh	48.7	49.6	52.0	55.4	47.5	48.5	50.7	54.1	46.4	47.3	49.5	52.9	45.3	46.1	48.3	51.6	43.0	43.8	45.9	49.0	39.8	40.6	42.5	45.4
		S/T	0.94	0.91	0.82	0.67	0.98	0.94	0.85	0.69	1.00	0.97	0.87	0.71	1.00	1.00	0.90	0.73	1.00	1.00	0.93	0.76	1.00	1.00	0.94	0.76
		Δ T	29	29	27	23	30	29	27	24	30	29	28	24	29	29	28	24	27	28	27	24	25	26	26	22
		kW	3.12	3.19	3.29	3.39	3.36	3.43	3.55	3.66	3.58	3.65	3.77	3.90	3.76	3.85	3.97	4.11	3.92	4.01	4.15	4.29	4.06	4.15	4.29	4.44
		Amps	14.7	15.0	15.4	15.9	15.7	16.0	16.4	17.0	16.8	17.2	17.7	18.2	17.8	18.2	18.7	19.3	18.8	19.2	19.8	20.5	19.8	20.2	20.8	21.5
		HI PR	246	265	280	292	276	297	314	327	314	338	357	372	358	385	406	424	402	433	457	477	444	478	505	527
		LO PR	109	116	127	135	115	123	134	143	120	127	139	148	126	134	146	156	132	140	153	163	136	145	158	169
	1286	MBh	47.2	48.2	50.4	53.8	46.2	47.0	49.3	52.6	45.1	45.9	48.1	51.3	44.0	44.8	46.9	50.1	41.8	42.6	44.6	47.6	38.7	39.4	41.3	44.1
		S/T	0.90	0.87	0.78	0.63	0.93	0.90	0.81	0.66	0.95	0.92	0.83	0.67	0.99	0.95	0.86	0.70	1.00	0.99	0.89	0.72	1.00	1.00	0.90	0.73
		Δ T	30	30	28	24	31	30	29	25	31	30	29	25	31	30	29	25	30	30	28	25	28	28	27	23
		kW	3.10	3.16	3.26	3.37	3.33	3.41	3.52	3.63	3.55	3.62	3.74	3.87	3.73	3.82	3.94	4.07	3.89	3.98	4.11	4.25	4.03	4.12	4.26	4.40
		Amps	14.6	14.9	15.3	15.7	15.6	15.9	16.3	16.8	16.7	17.0	17.5	18.1	17.7	18.1	18.6	19.2	18.7	19.1	19.6	20.3	19.6	20.1	20.7	21.4
		HI PR	244	262	277	289	273	294	311	324	311	334	353	368	354	381	402	420	398	429	453	472	440	473	500	521
		LO PR	108	115	125	134	114	121	132	141	119	126	138	147	125	132	145	154	131	139	152	161	135	144	157	167
	1128	MBh	43.6	44.5	46.6	49.7	42.6	43.4	45.5	48.5	41.6	42.4	44.4	47.4	40.6	41.4	43.3	46.2	38.5	39.3	41.1	43.9	35.7	36.4	38.1	40.7
		S/T	0.87	0.84	0.75	0.61	0.90	0.87	0.78	0.63	0.92	0.89	0.80	0.65	0.95	0.92	0.83	0.67	0.99	0.95	0.86	0.70	0.99	0.96	0.87	0.70
		Δ T	31	30	29	25	31	31	29	25	31	31	29	25	31	31	29	25	31	30	29	25	29	28	27	23
		kW	3.02	3.09	3.18	3.28	3.25	3.32	3.43	3.54	3.46	3.53	3.65	3.77	3.64	3.72	3.84	3.97	3.79	3.88	4.01	4.14	3.93	4.01	4.15	4.29
		Amps	14.2	14.5	14.9	15.4	15.2	15.5	15.9	16.4	16.3	16.6	17.1	17.7	17.3	17.6	18.1	18.7	18.2	18.6	19.1	19.8	19.2	19.6	20.2	20.8
		HI PR	236	254	268	280	265	285	301	314	301	324	343	357	343	369	390	407	386	416	439	458	427	459	485	506
		LO PR	105	111	122	130	111	118	129	137	115	122	134	142	121	129	140	149	127	135	147	157	131	139	152	162

IDB: Entering Indoor Dry Bulb Temperature

Shaded area reflects AHRI (TVA) conditions

kW = Total system power

High and low pressures are measured at the liquid and suction service valves.

Amps = outdoor unit amps (comp.+fan)

Expanded Cooling Data — GPG1660***M41**

			Outdoor Ambient Temperature																							
			65ºF				75ºF				85ºF				95ºF				105ºF				115ºF			
			Entering Indoor Wet Bulb Temperature																							
IDB	Airflow		59	63	67	71	59	63	67	71	59	63	67	71	59	63	67	71	59	63	67	71	59	63	67	71
70	2221	MBh	58.1	60.2	66.0	-	56.8	58.8	64.5	-	55.4	57.4	62.9	-	54.1	56.0	61.4	-	51.4	53.2	58.3	-	47.6	49.3	54.0	-
		S/T	0.78	0.65	0.45	-	0.80	0.67	0.47	-	0.83	0.69	0.48	-	0.85	0.71	0.49	-	0.88	0.74	0.51	-	0.89	0.74	0.52	-
		Δ T	19	16	12	-	19	16	12	-	19	16	12	-	19	16	13	-	19	16	12	-	18	15	12	-
		kW	3.87	3.95	4.07	-	4.15	4.24	4.36	-	4.40	4.49	4.63	-	4.62	4.71	4.86	-	4.80	4.90	5.06	-	4.96	5.07	5.23	-
		Amps	18.0	18.3	18.8	-	19.1	19.5	20.0	-	20.5	20.9	21.4	-	21.6	22.0	22.6	-	22.7	23.2	23.8	-	23.9	24.4	25.0	-
		HI PR	194	209	221	-	218	235	248	-	248	267	282	-	283	304	321	-	318	342	361	-	351	378	399	-
		LO PR	112	119	130	-	118	126	137	-	123	131	143	-	129	137	150	-	135	144	157	-	140	149	163	-
	1980	MBh	56.4	58.5	64.1	-	55.1	57.1	62.6	-	53.8	55.8	61.1	-	52.5	54.4	59.6	-	49.9	51.7	56.6	-	46.2	47.9	52.4	-
		S/T	0.74	0.62	0.43	-	0.77	0.64	0.44	-	0.79	0.66	0.46	-	0.81	0.68	0.47	-	0.84	0.70	0.49	-	0.85	0.71	0.49	-
		Δ T	19	17	13	-	20	17	13	-	20	17	13	-	20	17	13	-	20	17	13	-	18	16	12	-
		kW	3.84	3.92	4.04	-	4.12	4.20	4.33	-	4.36	4.46	4.59	-	4.58	4.68	4.82	-	4.77	4.87	5.02	-	4.92	5.03	5.19	-
		Amps	17.9	18.2	18.7	-	19.0	19.4	19.9	-	20.3	20.7	21.3	-	21.4	21.9	22.5	-	22.6	23.0	23.7	-	23.7	24.2	24.8	-
		HI PR	193	207	219	-	216	232	245	-	246	264	279	-	280	301	318	-	315	339	358	-	348	374	395	-
		LO PR	111	118	129	-	117	125	136	-	122	129	141	-	128	136	148	-	134	143	156	-	139	147	161	-
	1752	MBh	53.6	55.6	60.9	-	52.4	54.3	59.5	-	51.1	53.0	58.0	-	49.9	51.7	56.6	-	47.4	49.1	53.8	-	43.9	45.5	49.8	-
		S/T	0.71	0.59	0.41	-	0.74	0.61	0.43	-	0.75	0.63	0.44	-	0.78	0.65	0.45	-	0.81	0.67	0.47	-	0.81	0.68	0.47	-
		Δ T	20	17	13	-	20	17	13	-	20	18	13	-	20	18	13	-	20	17	13	-	19	16	12	-
		kW	3.79	3.86	3.97	-	4.06	4.14	4.26	-	4.30	4.39	4.52	-	4.51	4.60	4.75	-	4.69	4.79	4.94	-	4.84	4.95	5.10	-
		Amps	17.6	17.9	18.4	-	18.7	19.1	19.6	-	20.0	20.4	20.9	-	21.1	21.5	22.1	-	22.2	22.7	23.3	-	23.3	23.8	24.5	-
		HI PR	189	203	214	-	212	228	241	-	241	259	274	-	274	295	312	-	308	332	351	-	341	367	387	-
		LO PR	109	116	126	-	115	122	133	-	119	127	139	-	125	133	146	-	131	140	152	-	136	144	158	-
75	2221	MBh	59.1	60.8	65.9	70.7	57.7	59.4	64.3	69.0	56.3	58.0	62.8	67.4	55.0	56.6	61.3	65.8	52.2	53.8	58.2	62.5	48.4	49.8	53.9	57.9
		S/T	0.88	0.79	0.60	0.38	0.91	0.82	0.62	0.40	0.94	0.84	0.63	0.41	0.97	0.87	0.66	0.42	1.00	0.90	0.68	0.44	1.00	0.91	0.69	0.44
		Δ T	22	20	16	11	22	20	16	11	22	20	17	11	22	20	17	11	22	20	16	11	20	19	15	11
		kW	3.90	3.98	4.10	4.22	4.18	4.27	4.40	4.54	4.43	4.53	4.67	4.81	4.65	4.75	4.90	5.06	4.84	4.95	5.10	5.27	5.00	5.11	5.27	5.45
		Amps	18.1	18.5	18.9	19.5	19.3	19.7	20.2	20.8	20.6	21.0	21.6	22.3	21.8	22.2	22.8	23.5	22.9	23.4	24.0	24.8	24.0	24.5	25.2	26.1
		HI PR	196	211	223	233	220	237	250	261	251	270	285	297	285	307	324	338	321	346	365	381	355	382	403	421
		LO PR	113	120	131	140	119	127	139	148	124	132	144	154	130	139	151	161	137	145	159	169	141	150	164	175
	1980	MBh	57.4	59.1	63.9	68.6	56.0	57.7	62.5	67.0	54.7	56.3	61.0	65.4	53.4	**55.0**	59.5	63.8	50.7	52.2	56.5	60.6	47.0	48.4	52.3	56.2
		S/T	0.84	0.75	0.57	0.37	0.87	0.78	0.59	0.38	0.89	0.80	0.61	0.39	0.92	**0.83**	0.63	0.40	0.96	0.86	0.65	0.42	0.97	0.86	0.65	0.42
		Δ T	22	21	17	12	23	21	17	12	23	21	17	12	23	**21**	17	12	23	21	17	12	21	19	16	11
		kW	3.87	3.95	4.07	4.19	4.15	4.24	4.37	4.50	4.40	4.49	4.63	4.78	4.62	**4.72**	4.86	5.02	4.80	4.91	5.06	5.22	4.96	5.07	5.23	5.40
		Amps	18.0	18.3	18.8	19.4	19.1	19.5	20.0	20.6	20.5	20.9	21.4	22.1	21.6	**22.0**	22.6	23.4	22.7	23.2	23.9	24.6	23.9	24.4	25.0	25.9
		HI PR	194	209	221	230	218	235	248	259	248	267	282	294	283	**304**	321	335	318	342	361	377	351	378	399	416
		LO PR	112	119	130	138	118	126	137	146	123	131	143	152	129	**137**	150	160	135	144	157	167	140	149	163	173
	1752	MBh	54.5	56.1	60.7	65.2	53.2	54.8	59.3	63.7	52.0	53.5	57.9	62.2	50.7	52.2	56.5	60.6	48.2	49.6	53.7	57.6	44.6	45.9	49.7	53.4
		S/T	0.81	0.72	0.55	0.35	0.84	0.75	0.57	0.36	0.86	0.77	0.58	0.37	0.88	0.79	0.60	0.39	0.92	0.82	0.62	0.40	0.93	0.83	0.63	0.40
		Δ T	23	21	17	12	23	22	18	12	23	22	18	12	24	22	18	12	23	21	18	12	22	20	16	11
		kW	3.81	3.89	4.00	4.13	4.09	4.17	4.30	4.43	4.33	4.42	4.56	4.70	4.55	4.64	4.79	4.94	4.73	4.83	4.98	5.14	4.88	4.99	5.15	5.31
		Amps	17.7	18.1	18.5	19.1	18.9	19.2	19.7	20.3	20.2	20.6	21.1	21.8	21.3	21.7	22.3	23.0	22.4	22.8	23.5	24.2	23.5	24.0	24.7	25.4
		HI PR	191	205	217	226	214	230	243	253	243	262	276	288	277	298	315	328	312	335	354	369	344	371	391	408
		LO PR	110	117	127	136	116	123	135	143	120	128	140	149	127	135	147	157	133	141	154	164	137	146	159	170

IDB: Entering Indoor Dry Bulb Temperature

Shaded area reflects ACCA (TVA) conditions

kW = Total system power

High and low pressures are measured at the liquid and suction service valves.

Amps = outdoor unit amps (comp.+fan)

Design Subcooling, 5-7 °F @ the liquid access fitting connection AHRI 95 test conditions. Design Superheat 15-18°F @ the compressor suction access fitting connection.

Expanded Cooling Data — GPG1660***M41**

			Outdoor Ambient Temperature																							
			65ºF				75ºF				85ºF				95ºF				105ºF				115ºF			
			Entering Indoor Wet Bulb Temperature																							
IDB	Airflow		59	63	67	71	59	63	67	71	59	63	67	71	59	63	67	71	59	63	67	71	59	63	67	71
80	2221	MBh	60.1	61.5	65.7	70.2	58.7	60.0	64.1	68.6	57.4	58.6	62.6	66.9	56.0	57.2	61.1	65.3	53.2	54.3	58.0	62.0	49.2	50.3	53.8	57.5
		S/T	0.97	0.91	0.74	0.55	1.00	0.94	0.77	0.57	1.00	0.96	0.79	0.59	1.00	1.00	0.81	0.61	1.00	1.00	0.84	0.63	1.00	1.00	0.85	0.63
		Δ T	24	23	20	16	24	23	20	16	24	23	20	16	23	24	20	16	22	22	20	16	20	21	19	15
		kW	3.93	4.01	4.13	4.25	4.22	4.30	4.43	4.57	4.47	4.56	4.70	4.85	4.69	4.79	4.94	5.10	4.88	4.99	5.14	5.31	5.04	5.15	5.32	5.49
		Amps	18.3	18.6	19.1	19.6	19.4	19.8	20.3	20.9	20.8	21.2	21.8	22.4	21.9	22.4	23.0	23.7	23.1	23.6	24.2	25.0	24.2	24.7	25.4	26.3
		HI PR	198	214	225	235	223	240	253	264	253	272	288	300	288	310	328	342	324	349	369	385	358	386	407	425
		LO PR	114	122	133	141	121	128	140	149	125	133	146	155	132	140	153	163	138	147	160	171	143	152	166	177
	1980	MBh	58.4	59.7	63.8	68.2	57.0	58.3	62.3	66.6	55.7	56.9	60.8	65.0	54.3	55.5	**59.3**	63.4	51.6	52.7	56.3	60.2	47.8	48.8	52.2	55.8
		S/T	0.92	0.87	0.70	0.53	0.96	0.90	0.73	0.55	0.98	0.92	0.75	0.56	1.00	0.95	**0.77**	0.58	1.00	0.99	0.80	0.60	1.00	0.99	0.81	0.60
		Δ T	25	24	21	17	25	24	21	17	25	24	21	17	25	24	**21**	17	24	24	21	17	22	23	20	16
		kW	3.90	3.98	4.10	4.22	4.18	4.27	4.40	4.54	4.43	4.53	4.67	4.81	4.65	4.75	**4.90**	5.06	4.84	4.95	5.10	5.27	5.00	5.11	5.27	5.45
		Amps	18.1	18.5	18.9	19.5	19.3	19.7	20.2	20.8	20.6	21.0	21.6	22.3	21.8	22.2	**22.8**	23.5	22.9	23.4	24.0	24.8	24.1	24.5	25.2	26.1
		HI PR	196	211	223	233	220	237	250	261	251	270	285	297	286	307	**324**	338	321	346	365	381	355	382	403	421
		LO PR	113	120	131	140	119	127	139	148	124	132	144	154	130	139	**152**	161	137	145	159	169	141	150	164	175
	1752	MBh	55.5	56.7	60.6	64.7	54.2	55.4	59.2	63.2	52.9	54.1	57.7	61.7	51.6	52.7	56.3	60.2	49.0	50.1	53.5	57.2	45.4	46.4	49.6	53.0
		S/T	0.88	0.83	0.68	0.50	0.92	0.86	0.70	0.52	0.94	0.88	0.72	0.54	0.97	0.91	0.74	0.55	1.01	0.94	0.77	0.57	1.02	0.95	0.78	0.58
		Δ T	26	25	21	17	26	25	22	17	26	25	22	17	26	25	22	17	26	25	22	17	24	23	20	16
		kW	3.84	3.92	4.04	4.16	4.12	4.20	4.33	4.47	4.36	4.46	4.59	4.74	4.58	4.68	4.82	4.98	4.77	4.87	5.02	5.18	4.92	5.03	5.19	5.36
		Amps	17.9	18.2	18.7	19.2	19.0	19.4	19.9	20.5	20.3	20.7	21.3	21.9	21.4	21.9	22.5	23.2	22.6	23.0	23.7	24.4	23.7	24.2	24.8	25.6
		HI PR	193	207	219	228	216	232	245	256	246	264	279	291	280	301	318	332	315	339	358	373	348	374	395	412
		LO PR	111	118	129	137	117	125	136	145	122	129	141	151	128	136	148	158	134	143	156	166	139	147	161	171
85	2221	MBh	61.2	62.4	65.3	69.7	59.8	60.9	63.8	68.1	58.4	59.5	62.3	66.5	56.9	58.0	60.8	64.8	54.1	55.1	57.7	61.6	50.1	51.1	53.5	57.1
		S/T	1.00	0.98	0.88	0.72	1.00	1.00	0.92	0.74	1.00	1.00	0.94	0.76	1.00	1.00	0.97	0.79	1.00	1.00	1.00	0.82	1.00	1.00	1.00	0.82
		Δ T	25	25	24	21	25	25	24	21	24	25	24	21	24	24	24	21	22	23	24	21	21	21	22	19
		kW	3.96	4.04	4.16	4.29	4.25	4.34	4.47	4.61	4.50	4.60	4.74	4.89	4.73	4.83	4.98	5.14	4.92	5.03	5.19	5.35	5.09	5.19	5.36	5.54
		Amps	18.4	18.7	19.2	19.8	19.6	19.9	20.5	21.1	20.9	21.3	21.9	22.6	22.1	22.5	23.2	23.9	23.3	23.7	24.4	25.2	24.4	24.9	25.6	26.5
		HI PR	200	216	228	237	225	242	256	266	256	275	291	303	291	313	331	345	328	353	372	388	362	390	411	429
		LO PR	115	123	134	143	122	130	142	151	127	135	147	157	133	142	155	165	139	148	162	172	144	153	168	178
	1980	MBh	59.4	60.6	63.4	67.7	58.0	59.2	62.0	66.1	56.7	57.7	60.5	64.5	55.3	56.3	59.0	63.0	52.5	53.5	56.1	59.8	48.6	49.6	51.9	55.4
		S/T	0.97	0.93	0.84	0.68	1.00	0.97	0.87	0.71	1.00	0.99	0.90	0.73	1.00	1.00	0.92	0.75	1.00	1.00	0.96	0.78	1.00	1.00	0.97	0.79
		Δ T	27	26	25	21	27	27	25	22	26	27	25	22	26	26	25	22	24	25	25	22	23	23	23	20
		kW	3.93	4.01	4.13	4.25	4.22	4.30	4.43	4.57	4.47	4.56	4.70	4.85	4.69	4.79	4.94	5.10	4.88	4.99	5.14	5.31	5.04	5.15	5.32	5.49
		Amps	18.3	18.6	19.1	19.6	19.4	19.8	20.3	20.9	20.8	21.2	21.8	22.4	21.9	22.4	23.0	23.7	23.1	23.6	24.2	25.0	24.2	24.7	25.4	26.3
		HI PR	198	214	225	235	223	240	253	264	253	272	288	300	288	310	328	342	324	349	369	385	358	386	407	425
		LO PR	114	122	133	141	121	128	140	149	125	133	146	155	132	140	153	163	138	147	160	171	143	152	166	177
	1752	MBh	56.4	57.5	60.3	64.3	55.1	56.2	58.9	62.8	53.8	54.9	57.5	61.3	52.5	53.5	56.1	59.8	49.9	50.8	53.3	56.8	46.2	47.1	49.3	52.6
		S/T	0.93	0.89	0.81	0.66	0.96	0.93	0.84	0.68	0.99	0.95	0.86	0.70	1.00	0.98	0.89	0.72	1.00	1.00	0.92	0.75	1.00	1.00	0.93	0.75
		Δ T	27	27	26	22	28	27	26	22	28	27	26	22	28	28	26	23	26	27	26	22	24	25	24	21
		kW	3.87	3.95	4.07	4.19	4.15	4.24	4.36	4.50	4.40	4.49	4.63	4.77	4.62	4.71	4.86	5.02	4.80	4.90	5.06	5.22	4.96	5.07	5.23	5.40
		Amps	18.0	18.3	18.8	19.4	19.1	19.5	20.0	20.6	20.5	20.9	21.4	22.1	21.6	22.0	22.6	23.3	22.7	23.2	23.8	24.6	23.9	24.4	25.0	25.9
		HI PR	194	209	221	230	218	235	248	259	248	267	282	294	283	304	321	335	318	342	361	377	351	378	399	416
		LO PR	112	119	130	138	118	126	137	146	123	131	143	152	129	137	150	160	135	144	157	167	140	149	163	173

IDB: Entering Indoor Dry Bulb Temperature

Shaded area reflects AHRI (TVA) conditions

kW = Total system power

High and low pressures are measured at the liquid and suction service valves.

Amps = outdoor unit amps (comp.+fan)

Design Subcooling, 5-7 °F @ the liquid access fitting connection AHRI 95 test conditions. Design Superheat 15-18°F @ the compressor suction access fitting connection.

GPG1624060M41** - Rise Range: 35° - 65°												
E.S.P.	T1 Low-Stage Heating Speed			T2 High-Stage Heating Speed			T3 Low-Stage Cooling Speed		T4 High-Stage Cooling Speed		T5 Cooling Speed	
	CFM	WATTS	RISE	CFM	WATTS	RISE	CFM	WATTS	CFM	WATTS	CFM	WATTS
0.1	625	53	54	855	107	53	625	51	850	104	1,090	197
0.2	585	61	58	815	114	55	590	60	810	116	1,055	201
0.3	550	70	61	785	125	57	555	68	775	122	1,020	207
0.4	495	78	X	750	135	60	505	79	735	129	995	212
0.5	445	85	X	705	141	64	450	86	705	136	955	230
0.6	400	93	X	660	149	X	410	93	655	147	915	240
0.7	345	99	X	615	157	X	330	101	600	154	880	255
0.8	----	----	----	570	166	X	----	----	565	160	835	246

GPG1630080M41** - Rise Range: 35° - 65°												
E.S.P.	T1 Low-Stage Heating Speed			T2 High-Stage Heating Speed			T3 Low-Stage Cooling Speed		T4 High-Stage Cooling Speed		T5 Cooling Speed	
	CFM	WATTS	RISE	CFM	WATTS	RISE	CFM	WATTS	CFM	WATTS	CFM	WATTS
0.1	1,035	156	43	1,300	287	46	945	130	1,095	185	1,295	289
0.2	990	165	45	1,265	293	47	905	136	1,055	195	1,260	294
0.3	950	173	47	1,220	310	49	865	143	1,020	202	1,220	304
0.4	910	184	49	1,190	306	50	815	152	970	210	1,180	313
0.5	865	190	52	1,145	319	52	770	160	930	215	1,140	319
0.6	820	200	55	1,105	320	54	715	173	885	222	1,105	326
0.7	765	204	59	1,070	330	56	660	173	840	233	1,055	334
0.8	725	211	62	1,015	338	59	610	183	785	234	1,015	337

GPG1636080M41** - Rise Range: 35° - 65°												
E.S.P.	T1 Low-Stage Heating Speed			T2 High-Stage Heating Speed			T3 Low-Stage Cooling Speed		T4 High-Stage Cooling Speed		T5 Cooling Speed	
	CFM	WATTS	RISE	CFM	WATTS	RISE	CFM	WATTS	CFM	WATTS	CFM	WATTS
0.1	950	115	47	1,245	230	48	1,045	149	1,280	258	1,440	354
0.2	895	124	50	1,195	238	50	990	160	1,225	259	1,390	365
0.3	840	134	54	1,150	247	52	935	167	1,180	274	1,355	369
0.4	775	146	58	1,095	256	55	875	179	1,130	280	1,300	383
0.5	710	152	63	1,045	263	57	820	186	1,085	293	1,260	396
0.6	650	160	X	990	277	61	755	194	1,030	295	1,210	402
0.7	590	163	X	935	285	64	700	197	975	304	1,160	397
0.8	540	171	X	870	288	X	650	214	920	315	1,110	415

GPG1642100M41** - Rise Range: 35° - 65°												
E.S.P.	T1 Low-Stage Heating Speed			T2 High-Stage Heating Speed			T3 Low-Stage Cooling Speed		T4 High-Stage Cooling Speed		T5 Cooling Speed	
	CFM	WATTS	RISE	CFM	WATTS	RISE	CFM	WATTS	CFM	WATTS	CFM	WATTS
0.1	1,100	172	51	1,420	325	53	1,075	162	1,335	274	1,620	484
0.2	1,040	181	54	1,360	331	55	1,015	172	1,290	288	1,575	489
0.3	985	185	57	1,310	342	57	960	185	1,230	297	1,530	497
0.4	920	193	61	1,275	353	59	900	188	1,185	304	1,490	500
0.5	875	203	64	1,210	360	62	845	200	1,130	321	1,450	507
0.6	815	207	X	1,165	368	64	790	208	1,075	321	1,405	518
0.7	765	215	X	1,115	369	X	740	211	1,030	325	1,345	516
0.8	710	216	X	1,075	385	X	680	217	980	330	1,300	528

GPG1648100M41** - Rise Range: 35° - 65°												
E.S.P.	T1 Low-Stage Heating Speed			T2 High-Stage Heating Speed			T3 Low-Stage Cooling Speed		T4 High-Stage Cooling Speed		T5 Cooling Speed	
	CFM	WATTS	RISE	CFM	WATTS	RISE	CFM	WATTS	CFM	WATTS	CFM	WATTS
0.1	1,085	171	52	1,410	326	53	1,225	227	1,475	367	1,790	641
0.2	1,035	178	54	1,365	329	55	1,190	240	1,430	366	1,745	650
0.3	985	184	57	1,315	337	57	1,120	246	1,375	378	1,710	659
0.4	925	193	61	1,270	353	59	1,070	254	1,320	383	1,670	663
0.5	870	198	65	1,220	360	61	1,015	266	1,270	397	1,625	674
0.6	815	208	X	1,175	372	64	970	265	1,230	400	1,585	672
0.7	760	213	X	1,115	375	X	920	279	1,185	409	1,540	675
0.8	710	219	X	1,080	381	X	875	280	1,140	417	1,495	683

GPG1660*M41****

Downshot

Speed Tap	Static	CFM	Amps	Watts	RPM
T1	0.1	1334	1.65	180	627
	0.2	1286	1.75	192	665
	0.3	1212	1.83	202	715
	0.4	1144	1.94	216	759
	0.5	1077	1.99	222	792
	0.6	1039	2.10	238	830
	0.7	953	2.17	248	874
	0.8	904	2.27	258	913
	0.9	825	2.30	266	940
T2	0.1	1512	2.12	240	682
	0.2	1469	2.24	254	720
	0.3	1397	2.31	264	759
	0.4	1333	2.44	282	803
	0.5	1285	2.54	296	836
	0.6	1221	2.59	304	874
	0.7	1173	2.72	322	913
	0.8	1118	2.77	328	946
	0.9	1049	2.90	344	984
T3	0.1	2053	4.27	540	869
	0.2	2014	4.39	558	896
	0.3	1999	4.60	576	929
	0.4	1947	4.68	588	957
	0.5	1897	4.79	608	989
	0.6	1857	4.87	620	1012
	0.7	1763	4.99	640	1050
	0.8	1741	5.06	650	1072
	0.9	1669	5.19	668	1105
T4	0.1	2137	4.95	634	913
	0.2	2093	5.07	652	940
	0.3	2095	5.19	670	962
	0.4	2026	5.28	682	990
	0.5	1980	5.40	698	1018
	0.6	1961	5.49	720	1039
	0.7	1914	5.58	732	1072
	0.8	1845	5.70	742	1100
	0.9	1766	5.69	740	1127
T5	0.1	2299	5.70	742	942
	0.2	2233	5.80	748	969
	0.3	2217	5.90	768	990
	0.4	2157	6.07	786	1018
	0.5	2131	6.12	804	1045
	0.6	2060	6.21	816	1073
	0.7	2015	6.30	820	1095
	0.8	1940	6.27	816	1111
	0.9	1862	6.13	790	1128

Horizontal

Speed Tap	ESP in w.c.	CFM	Amps	Watts	RPM
T1	0.1	1355	1.57	174	599
	0.2	1281	1.66	182	651
	0.3	1235	1.76	196	693
	0.4	1168	1.81	202	726
	0.5	1118	1.94	218	775
	0.6	1049	2.03	232	819
	0.7	982	2.10	240	858
	0.8	922	2.14	246	885
	0.9	871	2.25	260	927
T2	0.1	1544	2.04	234	660
	0.2	1490	2.17	250	704
	0.3	1427	2.25	260	742
	0.4	1370	2.35	276	781
	0.5	1319	2.42	282	809
	0.6	1274	2.52	296	849
	0.7	1210	2.62	316	891
	0.8	1137	2.73	326	935
	0.9	1106	2.77	336	957
T3	0.1	2099	4.13	516	825
	0.2	2068	4.25	536	852
	0.3	2029	4.37	552	885
	0.4	1971	4.48	568	913
	0.5	1911	4.61	586	950
	0.6	1876	4.73	604	973
	0.7	1821	4.86	622	1012
	0.8	1792	4.91	630	1028
	0.9	1740	5.03	648	1067
T4	0.1	2233	4.76	608	863
	0.2	2168	4.91	628	896
	0.3	2125	5.02	640	924
	0.4	2070	5.14	660	951
	0.5	2050	5.27	678	979
	0.6	1980	5.41	696	1012
	0.7	1954	5.47	704	1034
	0.8	1893	5.60	724	1067
	0.9	1852	5.70	736	1089
T5	0.1	2322	5.44	710	904
	0.2	2294	5.55	726	934
	0.3	2254	5.68	742	958
	0.4	2201	5.80	766	990
	0.5	2147	5.93	782	1017
	0.6	2117	6.01	788	1039
	0.7	2081	6.12	808	1060
	0.8	2017	6.22	822	1094
	0.9	1932	6.10	804	1111

Notes

- Table represent dry coil without filter, to compensate for filter add 0.08” to measured E.S.P..
- SCFM correction for wet coil = 4%.
- 5-ton models are shipped from the factory with speed tap set on T4.

Airflow Pressure Drop of Downflow Economizer for 3 to 6 Ton Rooftop Units (100% Return Air)

SCFM	800	1000	1200	1400	1600	1800	2000	2200	2400	2600	2800
in. WG	0.02	0.04	0.05	0.07	0.09	0.12	0.14	0.17	0.21	0.24	0.28

5 Ton Models: GPG1660*M41B***

Down Flow						
Speed Tap	Torque %	Torque oz-ft	External Static Pressure (ESP), in w.c.	SCFM	RPM	BHP
T1	25	20	0.2	983	570	0.14
			0.4	833	659	0.16
			0.6	703	739	0.18
			0.8	574	808	0.19
			1.0	446	871	0.21
T2	39	31.2	0.2	1299	669	0.25
			0.4	1193	730	0.27
			0.6	1058	815	0.30
			0.8	950	875	0.32
			1.0	842	936	0.35
T3	68	54.4	0.2	1770	825	0.53
			0.4	1684	875	0.57
			0.6	1595	926	0.60
			0.8	1513	975	0.63
			1.0	1401	1039	0.67
T4	76	60.8	0.2	1862	859	0.62
			0.4	1787	909	0.66
			0.6	1702	955	0.69
			0.8	1625	1005	0.73
			1.0	1536	1056	0.76
T5	100	80	0.2	2132	954	0.91
			0.4	2056	993	0.95
			0.6	1080	1038	0.99
			0.8	1899	1079	1.03
			1.0	1828	1113	1.06

Horizontal Flow						
Speed Tap	Torque %	Torque oz-ft	External Static Pressure (ESP), in w.c.	SCFM	RPM	BHP
T1	25	20	0.2	1003	606	0.14
			0.4	850	701	0.17
			0.6	718	785	0.19
			0.8	586	858	0.20
			1.0	455	926	0.22
T2	39	31.2	0.2	1325	710	0.26
			0.4	1217	775	0.29
			0.6	1080	866	0.32
			0.8	969	930	0.35
			1.0	859	995	0.37
T3	68	54.4	0.2	1806	876	0.57
			0.4	1718	930	0.60
			0.6	1627	984	0.64
			0.8	1544	1036	0.67
			1.0	1429	1104	0.71
T4	76	60.8	0.2	1901	912	0.66
			0.4	1824	966	0.70
			0.6	1737	1014	0.73
			0.8	1658	1067	0.77
			1.0	1567	1122	0.81
T5	100	80	0.2	2175	1014	0.97
			0.4	2098	1055	1.00
			0.6	1102	1102	1.05
			0.8	1938	1146	1.09
			1.0	1865	1183	1.13

*Shaded area indicats air flow below 1500 SCFM (300 SCFM/ton) that is not recommended for High Stage cooling or heating.

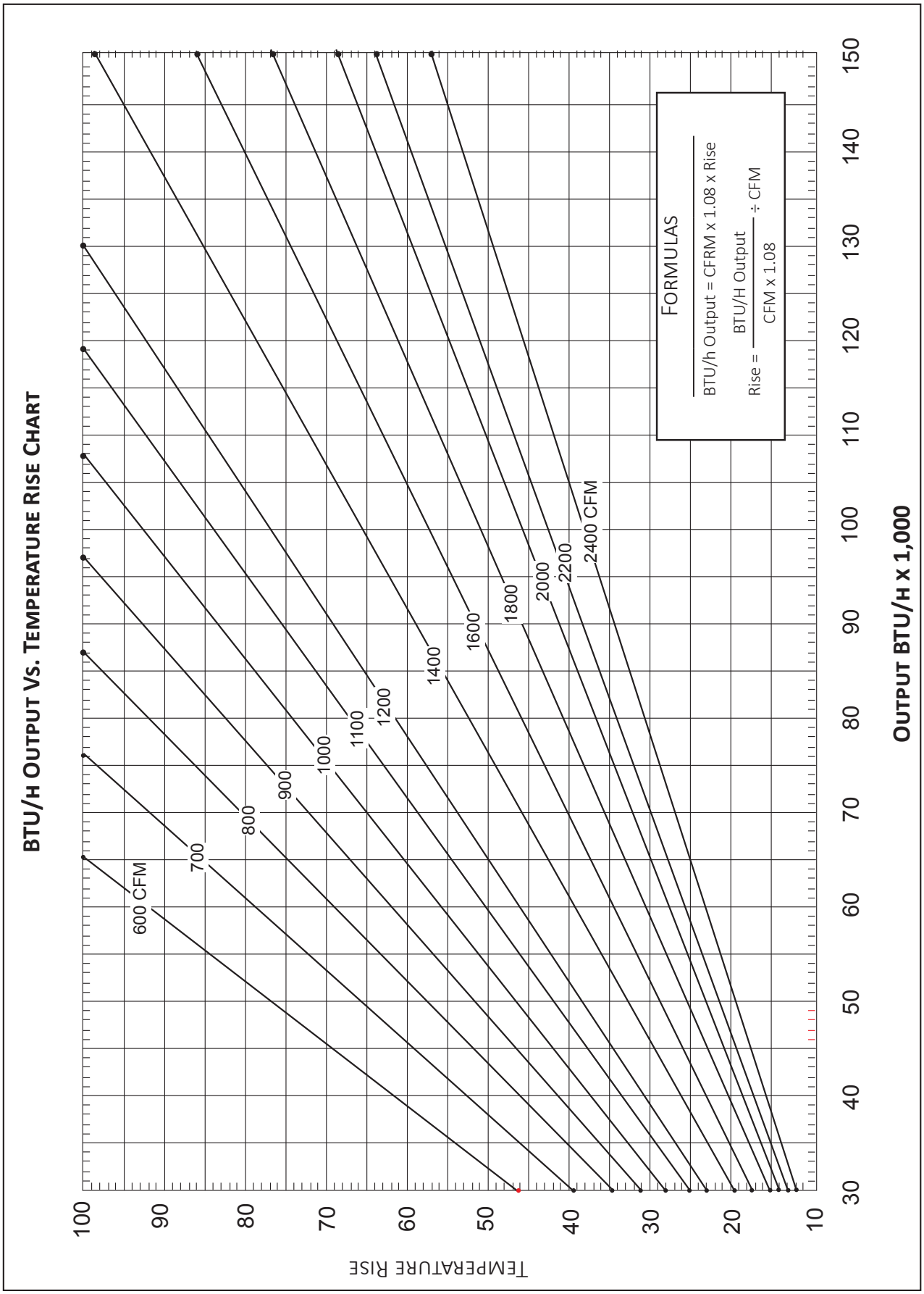
BTU/h Output Vs. Temperature Rise Chart
Temperature Rise
Output BTU/h x 1,000
600 CFM
700
800
900
1000
1100
1200
1400
1600
1800
2000
2200
2400 CFM
Formulas
BTU/h Output = CFRM x 1.08 x Rise
Rise = BTU/H Output / CFM x 1.08 ÷ CFM

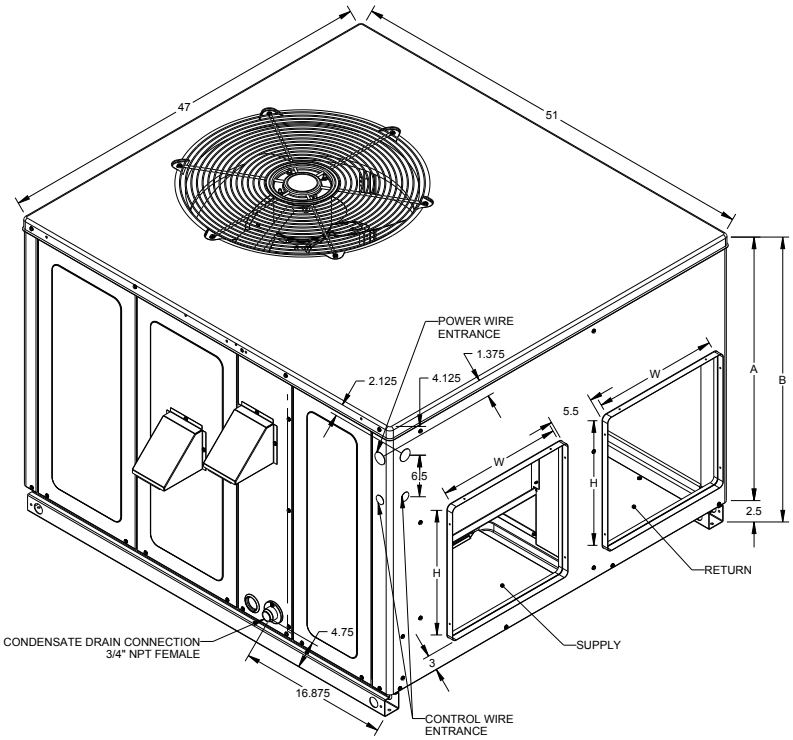

Model	Unit Dimensions (Inches)				Chassis Size
			Height		
	W	D	A	B	
GPG1624***M41**	47	51	32	34 1/2	Medium
GPG1630***M41**	47	51	32	34 1/2	Medium
GPG1636***M41**	47	51	40	42 1/2	Large
GPG1642***M41**	47	51	40	42 1/2	Large
~~GPG1648***M41**~~	~~47~~	~~51~~	~~40~~	~~42 1/2~~	~~Large~~
GPG1660***M41B*	73 3/8	47 5/8	39	43 1/2	X-Large

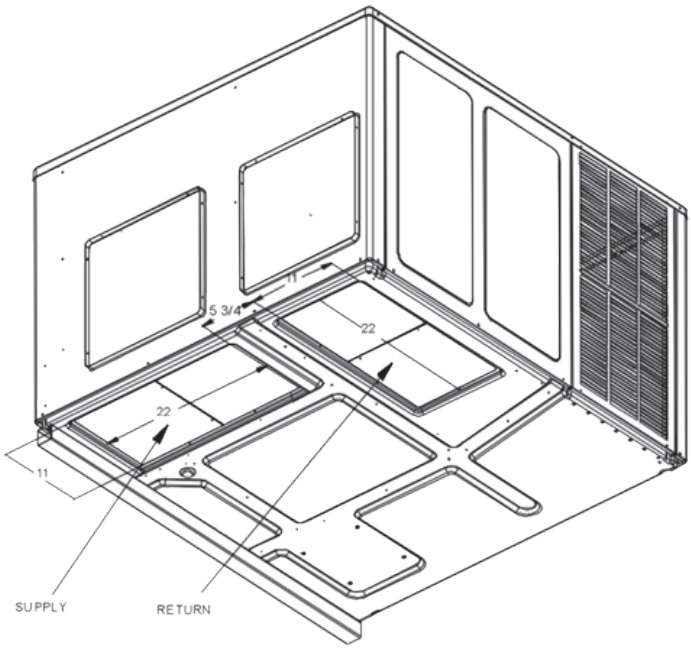

Model	Duct Openings			
	Supply		Return	
	W	H	W	H
GPG1624***M41**	16	16	16	16
GPG1630***M41**	16	16	16	16
GPG1636***M41**	16	18	16	18
GPG1642***M41**	16	18	16	18
~~GPG1648***M41**~~	~~16~~	~~18~~	~~16~~	~~18~~
GPG1660***M41B*	17	12	11	25

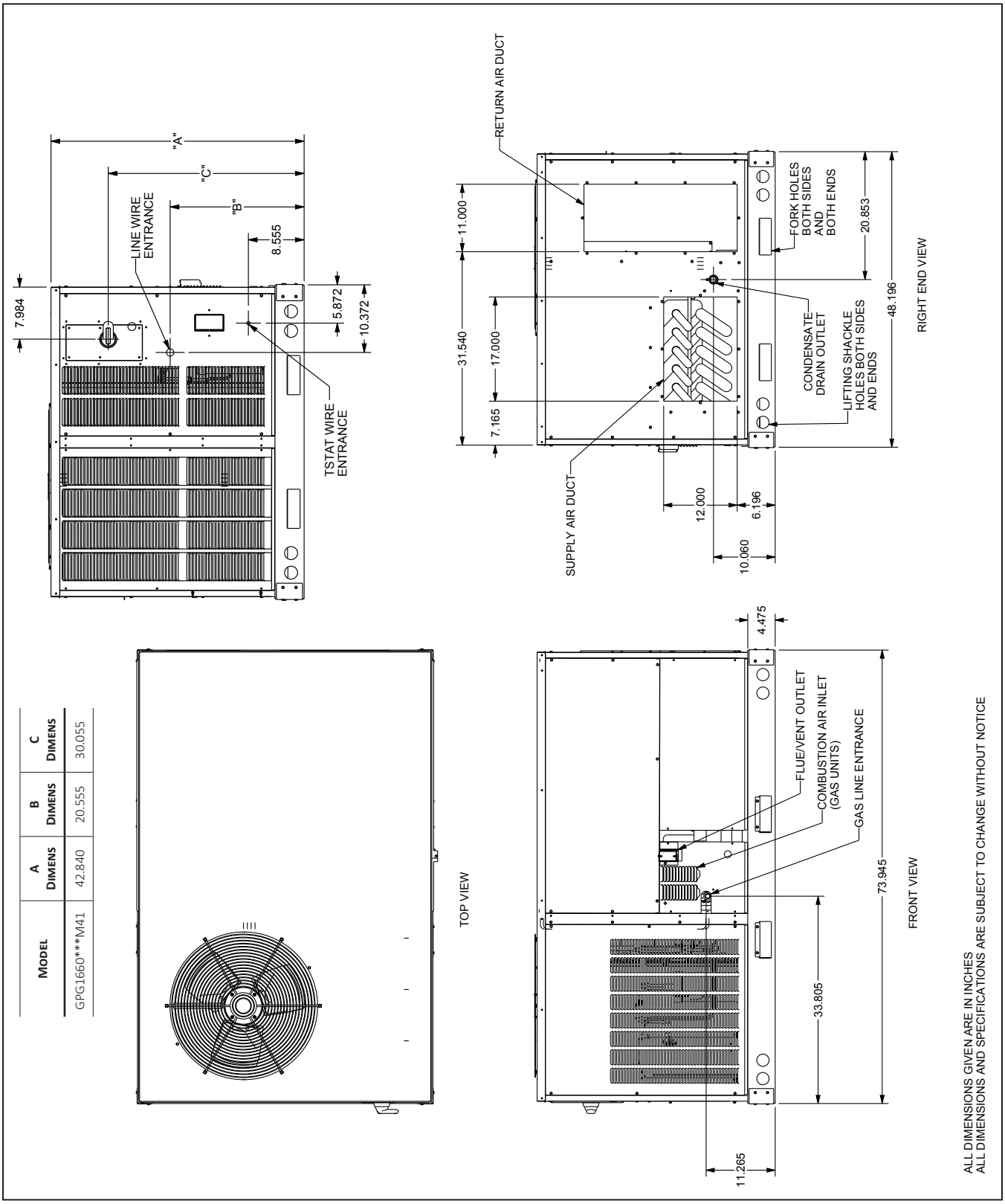

MODEL	A DIMENS	B DIMENS	C DIMENS
GPG1660***M41	42.840	20.555	30.055

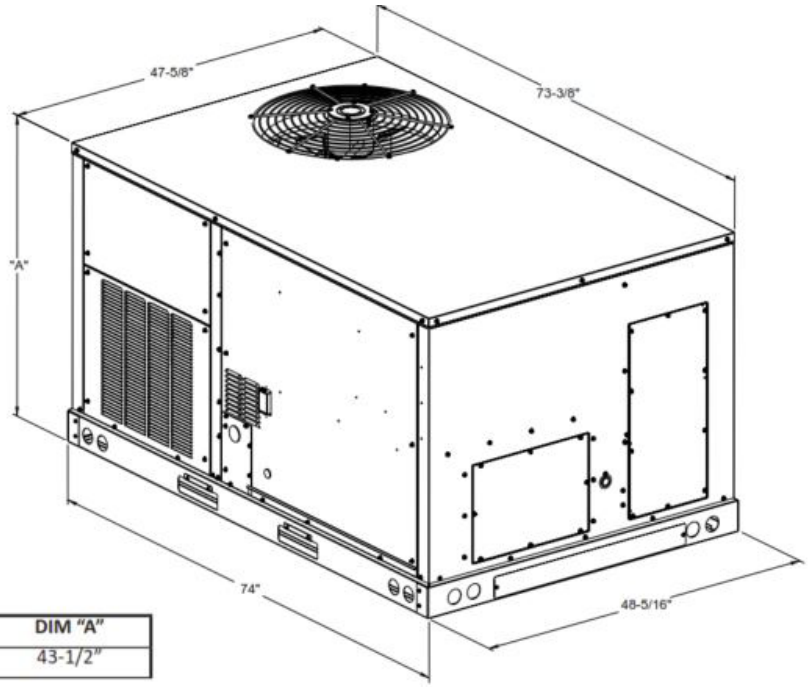

Model size	DIM "A"
5 ton	43-1/2"

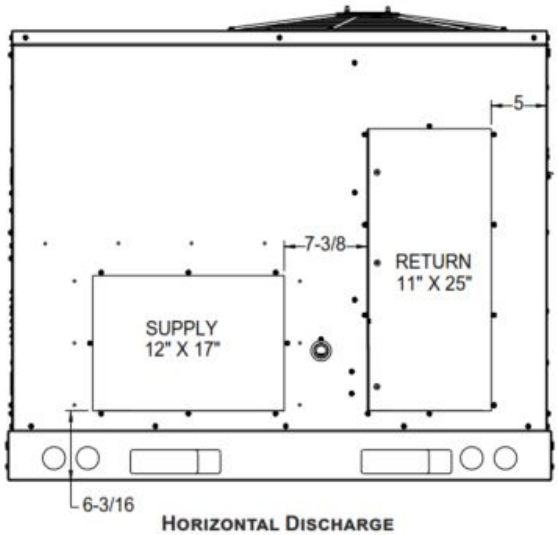

Horizontal Discharge

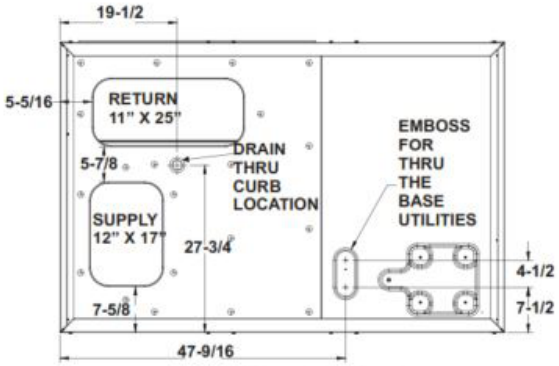

BOTTOM VIEW OF UNIT

Vertical Discharge

NOTE: Refer to IOD-7082 included in the literature pack for installing horizontal duct covers.

Provisions for forks have been included in the unit base frame. No other fork locations are approved.

- Unit must be lifted by the four lifting holes located at the base frame corners.
- Lifting cables should be attached to the unit with shackles.
- The distance between the crane hook and the top of the unit must not be less than 60”.
- Two spreader bars must span over the unit to prevent damage to the cabinet by the lift cables. Spreader bars must be of sufficient length so that cables do not come in contact with the unit during transport. Remove wood struts mounted beneath unit base frame before setting unit on roof curb. These struts are intended to protect unit base frame from fork lift damage. To remove the struts, extract the sheet metal retainers and pull the struts through the base of the unit. Refer to rigging label on the unit.

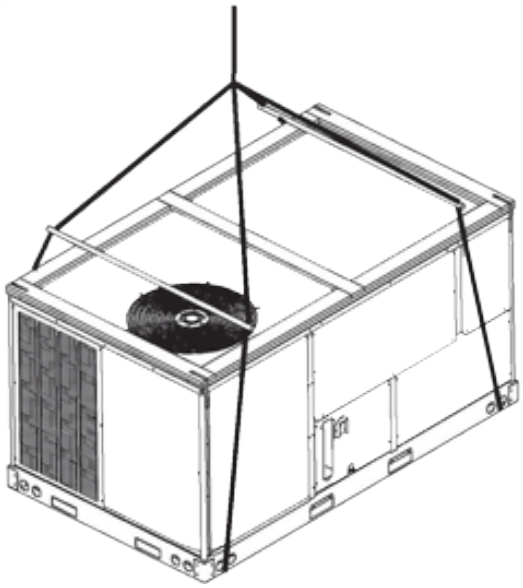

Important: If using bottom discharge with roof curb, duct-work should be attached to the curb prior to installing the unit. Duct-work dimensions are shown in Roof Curb Installation Instructions Manual.

Refer to the Roof Curb Installation Instructions for proper curb installation. Curbing must be installed in compliance with the National Roofing Contractors Association Manual.

Lower unit carefully onto roof mounting curb. While rigging the unit, the center of gravity will cause the condenser end to be lower than the supply air end.

Bring condenser end of unit into alignment with the curb. With condenser end of the unit resting on curb member and using curb as a fulcrum, lower opposite end of the unit until entire unit is seated on the curb. When a rectangular cantilever curb is used, take care to center the unit. Check for proper alignment and orientation of supply and return openings with duct.

To assist in determining rigging requirements, unit weights are shown on the following page.

Curb installations must comply with local codes and should follow the established guidelines of the National Roofing Contractors Association.

Proper unit installation requires that the roof curb be firmly and permanently attached to the roof structure. Check for adequate fastening method prior to setting the unit on the curb.

Full perimeter roof curbs are available from the factory and are shipped unassembled. The installing contractor is responsible for field assembly, squaring, leveling, and mounting on the roof structure. All required hardware necessary for the assembly of the sheet metal curb is included in the curb accessory package.

- Determine sufficient structural support before locating and mounting the curb and package unit.
- Duct-work must be constructed using industry guidelines. The duct-work must be placed into the roof curb before mounting the package unit. Our full perimeter curbs include duct connection frames to be assembled with the curb. Cantilevered-type curbs are not available from the factory.
- Contractor furnishes curb insulation, cant strips, flashing, and general roofing material.
- Support curbs on parallel sides with roof members. To prevent damage to the unit, the roof members cannot penetrate supply and return duct openings.

Note: The unit and curb accessories are designed to allow vertical duct installation before unit placement. Duct installation after unit placement is not recommended.

See the manual shipped with the roof curb for assembly and installation instructions.

3-D View

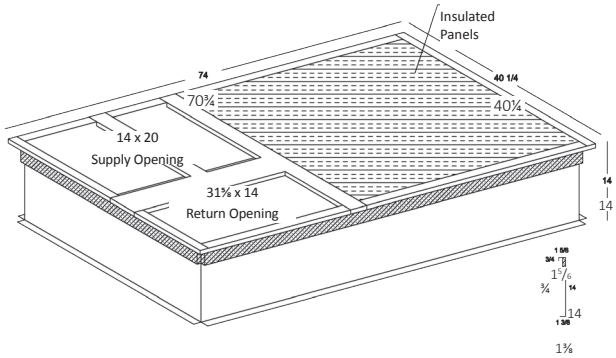

Top View

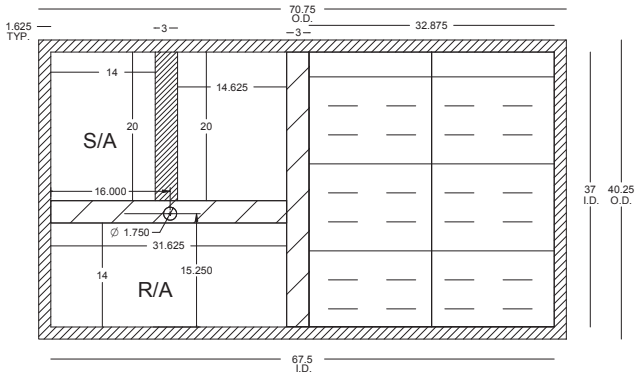

Corner & Center-of-Gravity Locations

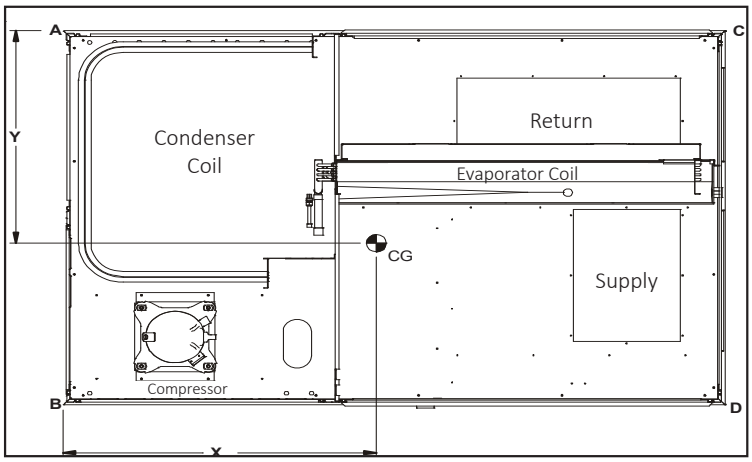

Model	X (in)	Y (in)	Shipping Weight (Lbs)	Operating Weight (Lbs)	Corner Weights (Lbs.)			
					A	B	C	D
GPG1660***M41**	46.4	28.1	655	629	186	204	65	174

Unit Clearances

Maintain an adequate clearance around the unit for safety, service, maintenance, and proper unit operation. Leave a total clearance of 75” on the main control panel side of the unit for possible removal of fan shaft, coil, electric heat, and gas furnace. Leave a clearance of 48” on all other sides of the unit for possible compressor removal or service access, and to ensure proper ventilation and condenser airflow. Do not install the unit beneath any obstruction. Install the unit away from all building exhausts to inhibit ingestion of exhaust air into the unit’s fresh-air intake.

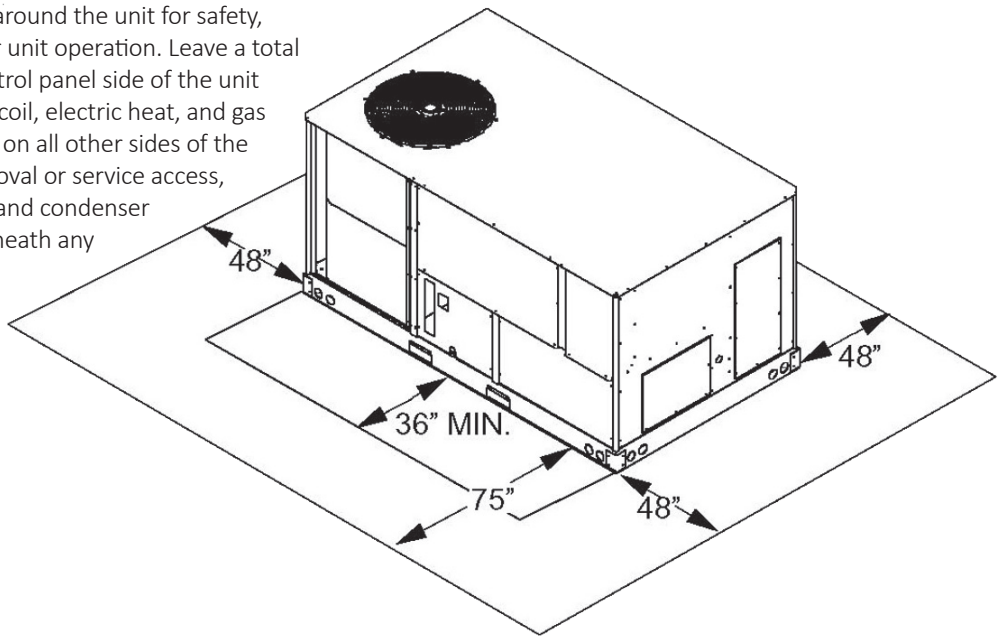

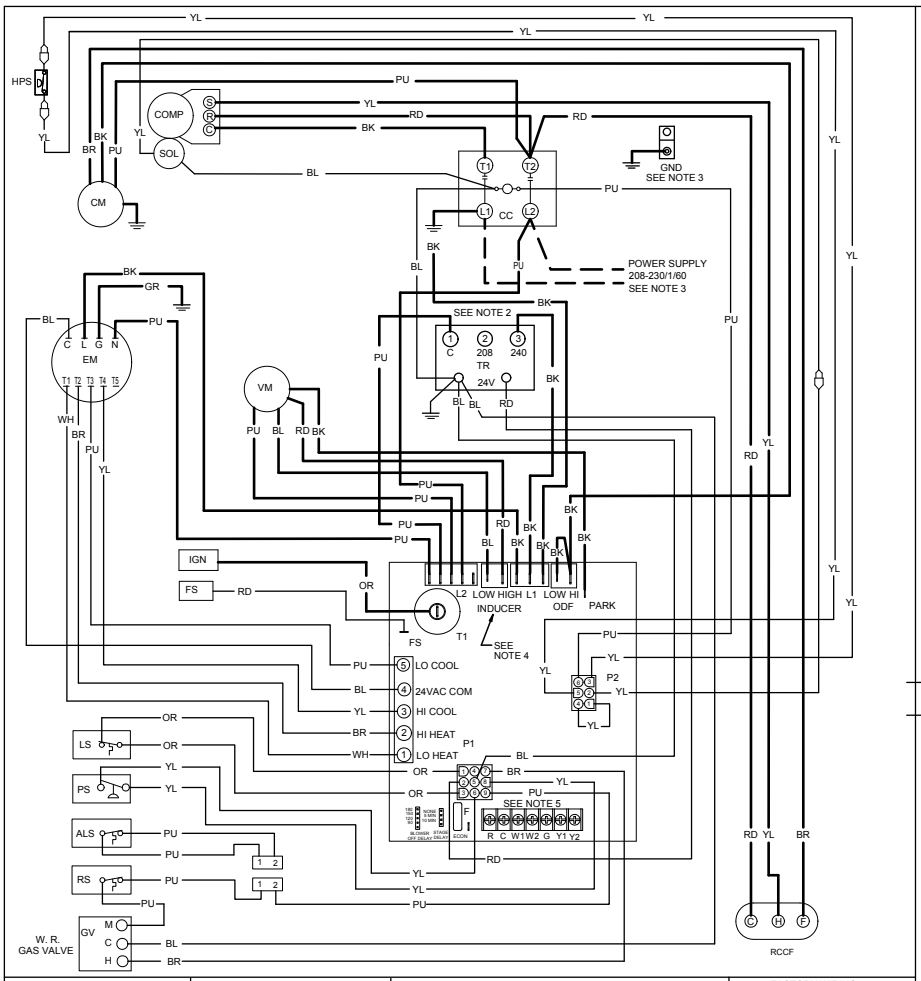

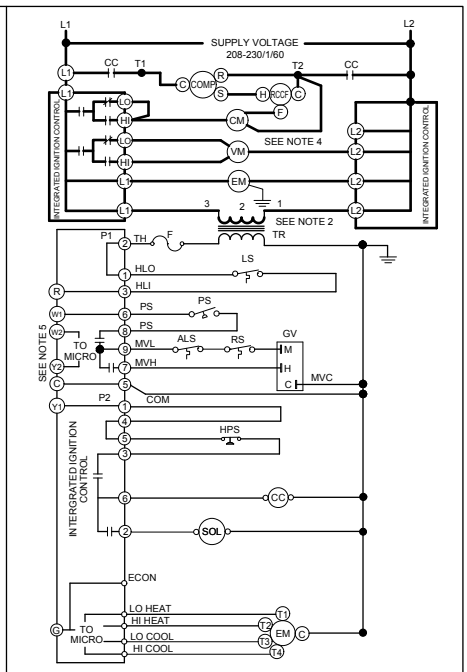

DIAGNOSTIC LED	FLASHES	STATUS	CHECK
RED	ON	NORMAL OPERATION	-
	OFF	NO POWER OR INTERNAL CONTROL FAULT	CHECK INPUT POWER CHECK FUSE(S) REPLACE CONTROL
	1 FLASH	IGNITION FAILURE	GAS FLOW GAS PRESSURE GAS VALVE FLAME SENSOR CHECK AUXILIARY LIMIT SW. CHECK ROLLOUT LIMIT SW.
	2 FLASHES	PRESSURE SWITCH OPEN	CHECK PRESSURE SWITCH CHECK TUBING CHECK VENT MOTOR
	3 FLASHES	PRESSURE SWITCH CLOSED WITHOUT INDUCER ON	CHECK PRESSURE SWITCH CHECK WIRING FOR SHORTS
	4 FLASHES	OPEN LIMIT SWITCH	CHECK MAIN LIMIT SWITCH
	5 FLASHES	FALSE FLAME DETECTED	CHECK GAS VALVE CHECK FOR SHORTS IN FLAME SENSOR WIRING
	6 FLASHES	COMPR. SHORT CYCLE DELAY	3 MIN COMP. SHORT CYCLE DELAY
	7 FLASHES	LIMIT OPEN 5 TIMES IN SAME CALL FOR HEAT	CHECK MAIN LIMIT SWITCH CHECK AUXILIARY LIMIT SW.
	8 FLASHES	IDT/ODT OPEN	CHECK JUMPER BETWEEN 1 AND 4 ON 6-CIRCUIT CONNECTOR
	9 FLASHES	PSW/LOC OPEN	CHECK REFRIGERANT SWITCHES FOR LOSS OF CHARGE OR HIGH HEAD PRESSURE
AMBER	OFF	NO FLAME PRESENT	-
	ON	NORMAL FLAME PRESENT	-
	1 FLASH	LOW FLAME SIGNAL	GAS FLOW GAS PRESSURE GAS VALVE FLAME SENSOR
	2 FLASHES	FALSE FLAME DETECTED	CHECK GAS VALVE CHECK FOR SHORTS IN FLAME SENSOR WIRING

COMPONENT LEGEND

ALS	AUXILLARY LIMIT SWITCH
CC	CONTACTOR
CM	CONDENSER MOTOR
COMP	COMPRESSOR
EM	EVAPORATOR MOTOR
F	FUSE
FS	FLAME SENSOR
GND	EQUIPMENT GROUND
GV	GAS VALVE
HLO	HI LIMIT OUTPUT
HLI	HI LIMIT INPUT
HPS	HIGH PRESSURE SWITCH
IGN	IGNITOR
IIC	INTEGRATED IGNITION CONTROL
LS	LIMIT SWITCH
MVL	MAIN GAS VALVE LOW
MVH	MAIN GAS VALVE HIGH
MVC	MAIN GAS VALVE COMMON
PS	PRESSURE SWITCH
ODF	OUTDOOR FAN
RCCF	RUN CAPACITOR FOR COMPRESSOR/FAN
RS	ROLLOUT SWITCH
SOL	SOLENOID (2ND STAGE COOL)
TR	TRANSFORMER
TH	TRANSFORMER HIGH
VM	VENT MOTOR

NOTES

1. REPLACEMENT WIRE MUST BE THE SAME SIZE AND TYPE OF INSULATION AS ORIGINAL (USE COPPER CONDUCTOR ONLY).
2. FOR 208 VOLT TRANSFORMER OPERATION MOVE BLACK WIRE FROM TERMINAL 3 TO TERMINAL 2 ON TRANSFORMER.
3. USE COPPER CONDUCTORS ONLY
4. FOR 208V OPERATION, REMOVE BLUE LEAD FROM INDUCER LOW TERMINAL. MOVE BLACK LEAD FROM PARK TERMINAL ONTO INDUCER LOW TERMINAL. PLACE BLUE LEAD ON PARK TERMINAL.
5. USE NEC CLASS 2 WIRE FOR THERMOSTAT FIELD WIRING.

0140G04547-A

FACTORY WIRING
- LINE VOLTAGE
- LOW VOLTAGE
- OPTIONAL HIGH VOLTAGE

FIELD WIRING
- HIGH VOLTAGE
- LOW VOLTAGE

WIRE CODE

BK	BLACK
BL	BLUE
BR	BROWN
GR	GREEN
GY	GRAY
OR	ORANGE
PK	PINK
PU	PURPLE
RD	RED
WH	WHITE
YL	YELLOW

JUNCTION
TERMINAL
INTERNAL TO INTEGRATED CONTROL
PLUG CONNECTION
SWITCH (PRESS.)
OVERCURRENT PROT. DEVICE
EQUIPMENT GROUND
FIELD GROUND
FIELD SPLICE
SWITCH (TEMP)
IGNITER

Wiring is subject to change. Always refer to the wiring diagram or the unit for the most up-to-date wiring.

WARNING — ***High Voltage:*** Disconnect all power before servicing or installing this unit. Multiple power sources may be present. Failure to do so may cause property damage, personal injury, or death.

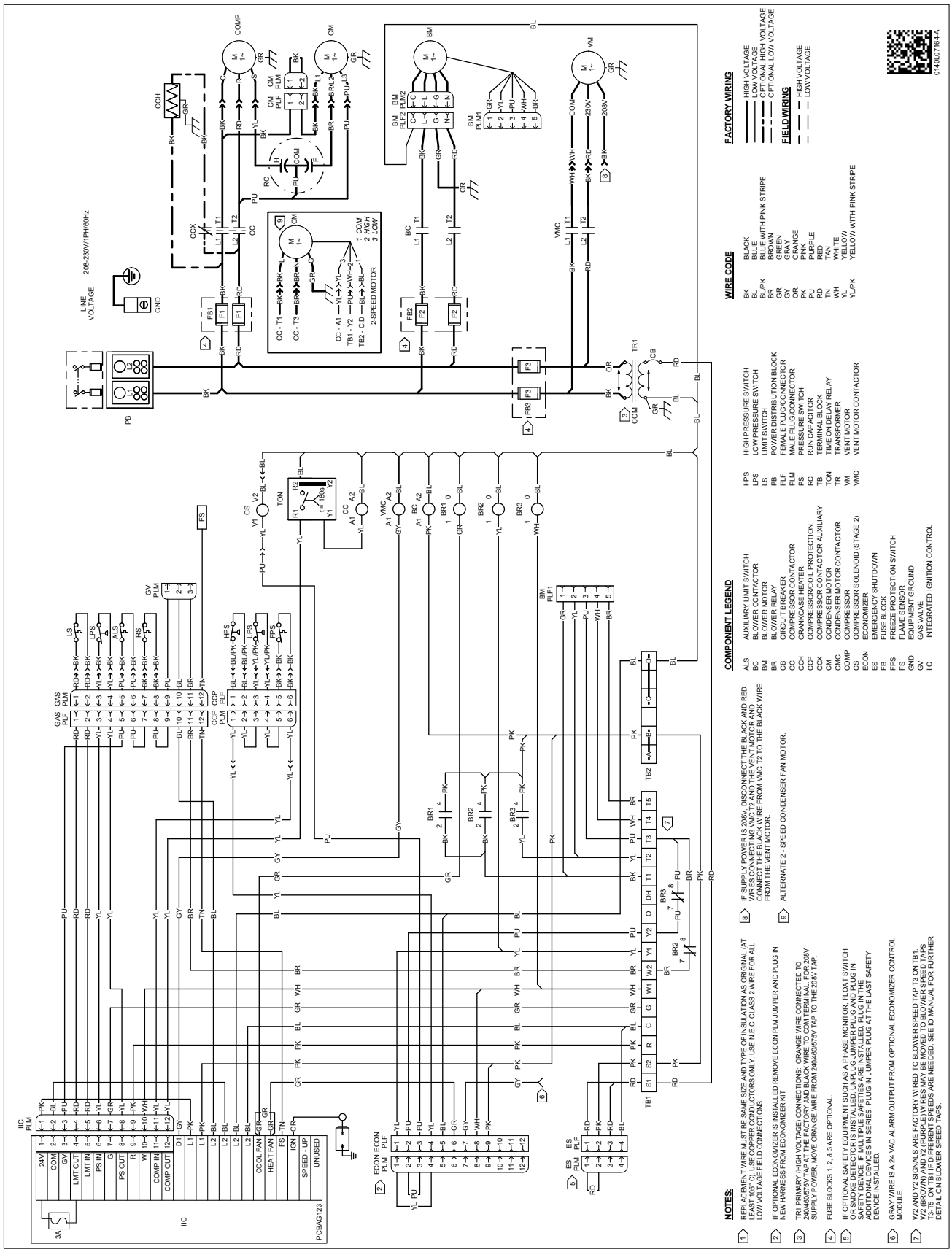

WARNING

High Voltage: Disconnect all power before servicing or installing this unit. Multiple power sources may be present. Failure to do so may cause property damage, personal injury, or death.

Wiring is subject to change. Always refer to the wiring diagram or the unit for the most up-to-date wiring.

For GPG1624-48***M41** Units

Accessory Description	Item Number	
	Medium Chassis	Large Chassis
Concentric Kit	CDK36	CDK4872
Downflow Economizer	PGEDJ101/102	PGEDJ103
Downflow Internal Filter Rack (with economizer)	DDNIFRPGMM	N/A (built into economizer)
Downflow Internal Filter Rack (no economizer)	DDNIFRPGA	DDNIFRPGA
Downflow Manual Damper	PGMDD101/102	PGMDD103
Downflow Motorized Damper	PGMDMD101/102	PGMDMD103
Downflow Square to Round	SQRPG101/102	SQRPG103
Economizer Wiring Harness (2-4 Tons)	0259L00412	0259L00412
External Horizontal Filter Rack	DPHFRA	DPHFRA
Flue Extension Kit	FLHDKT-1	FLHDKT-1
High-Altitude Kit	HA-03	HA-03
Horizontal Duct Cover	20464501PDGK	20464502PDGK
Horizontal Economizer	DHZECNJPGCHM	DHZECNJPGCHL
Horizontal Manual Damper	PGMDH102	PGMDH103
Horizontal Motorized Damper	PGMDMH102	PGMDMH103
Horizontal Square to Round	SQRPGH101/102	SQRPGH103
Internal Horizontal Filter Rack	DHZIFRPGCHA	DHZIFRPGCHA
LP Conversion Kit	LPM-08	LPM-08
Outdoor Thermostat with Housing	OTDFPKG-01	OTDFPKG-01
Roof Curb	D14CRBPGCHMA	D14CRBPGCHMA

For the GPG1660***M41AA Units

Item #	Description
14CURB3672	14" Roof Curb
D25FD3672	25% Manual Fresh Air Damper
D25MFD3672	25% Motorized Fresh Air Damper
CDK4872	Concentric Duct Kit
DDNECNJ3672B	Low-leak Downflow Economizer
DDNECNJ3672NR	Downflow Economizer w/o Barometric Relief
DDNSQRD487218	Downflow Square-to-Round Adapter (18" Round)
DHZECNJ3672	Horizontal Economizer
DBRD3672	Barometric Relief Damper
FSK01A	Freeze Stat Kit
GHRC-1	Hurricane Restraint Clips
HA-02	High Altitude Kit
LAKT01	Low-Ambient Kit
LPM-06	LP Conversion Kit
220-GX-01	Flue Extension Kit

For the GPG1660***M41BA Units

Item #	Description
0221L00014	14" Roof Curb
0270L01166	25% Manual Fresh Air Damper
0270L01165	25% Motorized Fresh Air Damper
0270L01338	Concentric Duct Adapter Kit 18"
0270L01753	Downflow Low-Leak Economizer Enthalpy
0270L01755	Downflow Ultra Low-Leak Economizer Enthalpy
0270L01757	Horizontal Ultra Low-Leak Economizer Enthalpy
0270L01250	Hurricane Restraint Clips (for 0221L00014 Roof Curb)
0270L01261	Hurricane Restraint Clips
HAKT036150	High Altitude Kit
LPHE-036072	LP Conversion Kit
HEFLUE048060	Flue Extension Kit

The manufacturing entity reserves the right to discontinue, or change at any time, specifications or designs without notice or without incurring obligations.