Franklin™
Air Conditioning & Heating

GPG14M

Cooling Capacity: 23,000 to 57,500 BTU/h

Heating Capacity: 40,000 to 120,000 BTU/h

Packaged Gas / Electric Units
2 to 5 Tons
14 SEER / 81% AFUE

Contents

Nomenclature 2
Product Specifications 3
Expanded Cooling Data 7
Airflow Data 26
Dimensions 32
Wiring Diagrams 33
Accessories 36

ALL ALUMINUM COIL

Standard Features

- Durable, corrosion-resistant T-140 aluminized steel tubular heat exchanger
- Energy-efficient scroll compressor
- Multi-speed ECM indoor blower motor
- Convertible airflow: horizontal or downflow application
- Aluminum tube/aluminum fin condenser coil
- All-aluminum evaporator coil
- Flowrater expansion device on 2- to 4-ton units; TXV expansion device on 5-ton units
- Redundant gas valve with easy conversion to propane
- Power-assisted combustion
- Direct spark ignition system includes a microprocessor-based control for the entire ignition sequence, all blower operation, and all safety circuits complete with self-diagnostics
- All models comply with California Low NOx standards
- AHRI Certified; ETL Listed

Cabinet Features

- High-quality UV-resistant powder-paint finish
- Aluminum foil-facing internal insulation reinforced with fiberglass scrim
- Convenient access panels
- One roof curb fits all units
- Fully insulated cabinet
- Bottom, 2” high base rails for easier handling
- When properly anchored, meets 2010 Florida Building Code unit integrity requirements for hurricane-type winds (Anchor bracket kits available.)
- Meets cabinet air leakage requirements when tested in accordance with ASHRAE standard 193
- One footprint for all tonnages

20 YEAR UNIT REPLACEMENT HEAT EXCHANGER LIMITED WARRANTY*

10 YEAR PARTS LIMITED WARRANTY*

Intertek

AHRI CERTIFIED®

COMPANY WITH QUALITY SYSTEM CERTIFIED BY DNV GL = ISO 9001 =

COMPANY WITH ENVIRONMENTAL SYSTEM CERTIFIED BY DNV GL = ISO 14001 =

* Complete warranty details available from your local dealer or at www.franklinhvacsystems.com. To receive the 10-Year Parts Limited Warranty, online registration must be completed within 60 days of installation. Online registration is not required in California or Quebec.

G	P	G	14	36	080	M	4	1	**
1	2	3	4,5	6,7	8,9,10	11	12	13	14,15

Brand

G Franklin® brand

Product Category

P Packaged Unit

Unit Type

G Gas/Electric

D Dual-Fuel

Efficiency

14 14 SEER

16 16 SEER

Nominal Capacity

24	2 Tons	36	3 Tons	42	3½ Tons
30	2½ tons	37	3 Tons	48	4 Tons
				60	5 Tons

Heat Input

40	40 MBTU/h	100	100 MBTU/h
60	60 MBTU/h	120	120 MBTU/h
80	80 MBTU/h	140	138 MBTU/h

Airflow

M Multi-Position

Refrigerant

4 R-410A

Electrical

1 208-230/1/60

Engineering

Major/ Minor Revisions

	GPG1424 040M41AA	GPG1424 060M41AA	GPG1430 040M41AA	GPG1430 060M41AA	GPG1430 040M41B*	GPG1430 060M41B*	GPG1436 040M41BA
Cooling Capacity							
Total BTU/h	23,000	23,000	28,600	28,600	28,600	28,600	34,200
Sensible BTU/h	18,400	18,400	22,800	22,800	22,400	22,400	27,000
SEER / EER	14.0 / 11.0	14.0 / 11.0	14.0 / 11.0	14.0 / 11.0	14.0 / 11.0	14.0 / 11.0	14.0 / 11.0
Decibels	78	78	78	78	78	78	78
AHRI Reference #s	7505444	7505444	7505448	7505448	9101255	9101255	7505445
Heating Capacity							
Input BTU/h	40,000	60,000	40,000	60,000	40,000	60,000	40,000
Output BTU/h	31,000	48,000	31,000	48,000	31,000	48,000	31,000
AFUE	81	81	81	81	81	81	81
Temperature Rise Range	25 - 55	30 - 60	25 - 55	30 - 60	25 - 55	30 - 60	25 - 55
No. of Burners	2	3	2	3	2	3	2
Orifice Size (Natural/Propane)	45 / 1.25MM	45 / 1.25MM	45 / 1.25MM	45 / 1.25MM	45 / 1.25MM	45 / 1.25MM	45 / 1.25MM
Evaporator Motor							
Type	ECM	ECM	ECM	ECM	ECM	ECM	ECM
Wheel (D x W)	10” x 8”	10” x 8”	10” x 8”	10” x 8”	10” x 8”	10” x 8”	10” x 9”
Indoor Nominal CFM	800	800	1,000	1,000	1,000	1,000	1,200
Motor Speed Tap (Cooling)	T4	T4	T4	T4	T4	T4	T4
RPM/Amps (Cooling)	1050/3.9	1050/3.9	1050/3.9	1050/3.9	1050/3.9	1050/3.9	1050/3.9
Horsepower	1/2	1/2	1/2	1/2	1/2	1/2	1/2
Evaporator Coil							
Face Area (ft^2)	4.3	4.3	4.3	4.3	4.3	4.3	4.3
Rows Deep/Fins per Inch	3/14	3/14	3/14	3/14	3/14	3/14	4/14
Piston Size (Cooling)	0.057	0.057	0.062	0.062	0.062	0.062	0.068
Filter Size (ft^2)	2.7	3.3	3.4	3.4	3.4	3.4	4.0
Drain Size (NPT)	¾”	¾”	¾”	¾”	¾”	¾”	¾”
Refrigerant Charge (oz.)	75	75	78	78	78	78	72
Condenser Fan / Coil							
Horsepower - RPM	1/6 - 815	1/6 - 815	1/4 - 1,075	1/4 - 1,075	1/4 - 1,075	1/4 - 1,075	1/4 - 830
Diameter / # of Blades	22” / 3	22” / 3	22” / 3	22” / 3	22” / 3	22” / 3	22” / 3
Outdoor Nominal CFM	2,150	2,150	3,050	3,050	3,050	3,050	2,250
Face Area (ft^2)	12.3	12.3	12.3	12.3	12.3	12.3	8.8
Rows Deep/Fins per Inch	1/24	1/24	1/24	1/24	1/24	1/24	2/27
Compressor							
Quantity / Type	1 / Rotary	1 / Rotary	1 / Scroll	1 / Scroll	1 / Rotary	1 / Rotary	1 / Rotary
Stage	Single	Single	Single	Single	Single	Single	Single
Compressor RLA/LRA	7.7 / 37.0	7.7 / 37.0	14.1 / 73	14.1 / 73	10.5/47.0	10.5/47.0	12.7 / 55.3
Electrical Data							
Voltage-Phase (60 Hz)	208/230-1	208/230-1	208/230-1	208/230-1	208/230-1	208/230-1	208/230-1
Indoor Blower FLA	3.9	3.9	3.9	3.9	3.9	3.9	3.9
Outdoor Fan FLA/LRA	1.1 / 1.7	1.1 / 1.7	1.4 / 2.9	1.4 / 2.9	1.4 / 2.9	1.4 / 2.9	1.5 / 3.0
Total Unit Amps	12.7	12.7	19.4	19.4	15.8	15.8	19.5
Min. Circuit Ampacity	14.6	14.6	22.9	22.9	18.4	18.4	21.0
Max. Overcurrent Protection	20 amps	20 amps	35 amps	35 amps	25 amps	25 amps	30 amps
Entrance Size Power Supply	1⅛”	1⅛”	1⅛”	1⅛”	1⅛”	1⅛”	1⅛”
Entrance Size Control Voltage	⅞”	⅞”	⅞”	⅞”	⅞”	⅞”	⅞”
Operating / Ship Weights (lbs)	412 / 435	417 / 439	415 / 438	420 / 442	412 / 435	417 / 439	449 / 470

[1] Wire size should be determined in accordance with National Electrical Codes. Extensive wire runs will require larger wire sizes.
[2] Must use time-delay fuses or HACR-type circuit breakers of the same size as noted.

Note: Always check the S&R plate for electrical data on the unit being installed.

	GPG1436 060M41BA	GPG1436 080M41BA	GPG1442 060M41AA	GPG1442 080M41AA	GPG1448 060M41AA	GPG1448 080M41AA	GPG1448 100M41AA
COOLING CAPACITY							
Total BTU/h	34,200	34,200	40,000	40,000	46,500	46,500	46,500
Sensible BTU/h	27,000	27,000	30,000	30,000	36,800	36,800	36,800
SEER / EER	14.0 / 11.0	14.0 / 11.0	14.0 / 11.0	14.0 / 11.0	14.0 / 11.0	14.0 / 11.0	14.0 / 11.0
Decibels	78	78	78	78	80	80	80
AHRI Reference #s	7505445	7505445	7505449	7505449	7505446	7505446	7505446
HEATING CAPACITY							
Input BTU/h	60,000	80,000	60,000	80,000	60,000	80,000	100,000
Output BTU/h	48,000	64,000	48,000	64,000	48,000	64,000	80,000
AFUE	81	81	81	81	81	81	81
Temperature Rise Range	30 - 60	30 - 60	30 - 60	30 - 60	30 - 60	30 - 60	35 - 65
No. of Burners	3	4	3	4	3	4	5
Orifice Size (Natural/Propane)	45 / 1.25MM	45 / 1.25MM	45 / 1.25MM	45 / 1.25MM	45 / 1.25MM	45 / 1.25MM	45 / 1.25MM
EVAPORATOR MOTOR							
Type	ECM	ECM	ECM	ECM	ECM	ECM	ECM
Wheel (D x W)	10” x 9”	10” x 9”	10” x 9”	10” x 9”	11” x 10”	11” x 10”	11” x 10”
Indoor Nominal CFM	1,200	1,200	1,300	1,300	1,525	1,525	1,525
Motor Speed Tap (Cooling)	T4	T4	T4	T4	T4	T4	T4
RPM/Amps (Cooling)	1050/3.9	1050/3.9	1050/5.7	1050/5.7	1,050/5.7	1,050/5.7	1,050/5.7
Horsepower	1/2	1/2	3/4	3/4	3/4	3/4	3/4
EVAPORATOR COIL							
Face Area (ft^2)	4.3	4.3	4.3	4.3	5.7	5.7	5.7
Rows Deep/Fins per Inch	4/14	4/14	4/14	4/14	4/14	4/14	4/14
Piston Size (Cooling)	0.068	0.068	0.072	0.072	0.078	0.078	0.078
Filter Size (ft^2)	4.0	4.4	4.3	4.4	5.1	5.1	5.1
Drain Size (NPT)	¾”	¾”	¾”	¾”	¾”	¾”	¾”
Refrigerant Charge (oz.)	72	72	88	88	99	99	99
CONDENSER FAN / COIL							
Horsepower - RPM	1/4 - 830	1/4 - 830	1/4 - 1,075	1/4 - 1,075	1/4 - 1,075	1/4 - 1,075	1/4 - 1,075
Diameter / # of Blades	22” / 3	22” / 3	22” / 3	22” / 3	22” / 3	22” / 3	22” / 3
Outdoor Nominal CFM	2,250	2,250	2,850	2,850	3,300	3,300	3,300
Face Area (ft^2)	8.8	8.8	11.1	11.1	15.4	15.4	15.4
Rows Deep/Fins per Inch	2/27	2/27	2/27	2/27	1/24	1/24	1/24
COMPRESSOR							
Quantity / Type	1 / Rotary	1 / Rotary	1 / Scroll	1 / Scroll	1 / Scroll	1 / Scroll	1 / Scroll
Stage	Single	Single	Single	Single	Single	Single	Single
Compressor RLA/LRA	12.7 / 55.3	12.7 / 55.3	17.9 / 112	17.9 / 112	19.9/109	19.9/109	19.9/109
ELECTRICAL DATA							
Voltage-Phase (60 Hz)	208/230-1	208/230-1	208/230-1	208/230-1	208/230-1	208/230-1	208/230-1
Indoor Blower FLA	3.9	3.9	5.7	5.7	5.7	5.7	5.7
Outdoor Fan FLA/LRA	1.5 / 3.0	1.5 / 3.0	1.4/ 2.9	1.4/ 2.9	1.4/ 2.9	1.4/ 2.9	1.4/ 2.9
Total Unit Amps	19.5	19.5	22.3	22.3	27.0	27.0	27.0
Min. Circuit Ampacity	21.0	21.0	26.8	26.8	32	32	32
Max. Overcurrent Protection	30 amps	30 amps	40 amps	40 amps	50 amps	50 amps	50 amps
Entrance Size Power Supply	1⅛”	1⅛”	1⅛”	1⅛”	1⅛”	1⅛”	1⅛”
Entrance Size Control Voltage	⅞”	⅞”	⅞”	⅞”	⅞”	⅞”	⅞”
OPERATING / SHIP WEIGHTS (LBS)	453 / 475	458 / 480	493 / 515	496 / 520	518 / 540	523 / 545	528 / 550

[1] Wire size should be determined in accordance with National Electrical Codes. Extensive wire runs will require larger wire sizes.
[2] Must use time-delay fuses or HACR-type circuit breakers of the same size as noted.

NOTE: Always check the S&R plate for electrical data on the unit being installed.

	GPG1460 080M41AA	GPG1460 100M41AA	GPG1460 120M41AA	GPG1461 080M41A*	GPG1461 100M41A*	GPG1461 120M41A*
Cooling Capacity						
Total BTU/h	57,500	57,500	57,500	57,500	57,500	57,500
Sensible BTU/h	44,500	44,500	44,500	42,000	42,000	42,000
SEER / EER	14.2 / 10.1	14.2 / 10.1	14.2 / 10.1	14.0 / 11.0	14.0 / 11.0	14.0 / 11.0
Decibels	78	78	78	78	78	78
AHRI Reference #s	7505447	7505447	7505447	8321898	8321898	8321898
Heating Capacity						
High-Fire Input / Output	80,000 / 63,000	100,000 / 78,000	120,000 / 94,000	80,000 / 63,000	100,000 / 78,000	120,000 / 94,000
Low-Fire Input / Output	60,000 / 47,000	75,000 / 58,000	90,000 / 71,000	60,000 / 47,000	75,000 / 58,000	90,000 / 71,000
AFUE	81	81	81	81	81	81
Temperature Rise Range	30 - 60	35 - 65	35 - 65	30 - 60	35 - 65	35 - 65
No. of Burners	4	5	6	4	5	6
Orifice Size (Natural/Propane)	45 / 1.25MM	45 / 1.25MM	45 / 1.25MM	45 / 1.25MM	45 / 1.25MM	45 / 1.25MM
Evaporator Motor						
Type	ECM	ECM	ECM	ECM	ECM	ECM
Wheel (D x W)	11” x 10”	11” x 10”	11” x 10”	11” x 10”	11” x 10”	11” x 10”
Indoor Nominal CFM	1,810	1,810	1,810	1,750	1,750	1,750
Motor Speed Tap (Cooling)	T3 L / T4 H	T3 L / T4 H	T3 L / T4 H	T3 L / T4 H	T3 L / T4 H	T3 L / T4 H
RPM/Amps (Cooling)	1,050/7.0	1,050/7.0	1,050/7.0	1,050/7.0	1,050/7.0	1,050/7.0
Horsepower	1	1	1	1	1	1
Evaporator Coil						
Face Area (ft^2)	5.7	5.7	5.7	5.7	5.7	5.7
Rows Deep/Fins per Inch	4/14	4/14	4/14	4/14	4/14	4/14
Piston Size (Cooling)	TXV	TXV	TXV	TXV	TXV	TXV
Filter Size (ft^2)	6.0	6.0	6.0	6.0	6.0	6.0
Drain Size (NPT)	¾”	¾”	¾”	¾”	¾”	¾”
Refrigerant Charge (oz.)	100	100	100	100	100	100
Condenser Fan / Coil						
Horsepower - RPM	1/4 - 1,075	1/4 - 1,075	1/4 - 1,075	1/3 - 1,122	1/3 - 1,122	1/3 - 1,122
Diameter / # of Blades	22” / 3	22” / 3	22” / 3	22” / 3	22” / 3	22” / 3
Outdoor Nominal CFM	3,000	3,000	3,000	3,000	3,000	3,000
Face Area (ft^2)	11.3	11.3	11.3	14.4	14.4	14.4
Rows Deep/Fins per Inch	2/27	2/27	2/27	2/27	2/27	2/27
Compressor						
Quantity / Type	1 / Scroll	1 / Scroll	1 / Scroll	1 / Scroll	1 / Scroll	1 / Scroll
Stage	Two	Two	Two	Two	Two	Two
Compressor RLA/LRA	27.1 / 152.9	27.1 / 152.9	27.1 / 152.9	28.8 / 152.9	28.8 / 152.9	28.8 / 152.9
Electrical Data						
Voltage-Phase (60 Hz)	208/230-1	208/230-1	208/230-1	208/230-1	208/230-1	208/230-1
Indoor Blower FLA	7.0	7.0	7.0	7.0	7.0	7.0
Outdoor Fan FLA/LRA	1.4/ 2.9	1.4/ 2.9	1.4/ 2.9	2.0 / 4.40	2.0 / 4.40	2.0 / 4.40
Total Unit Amps	35.5	35.5	35.5	30	30	30
Min. Circuit Ampacity	42.3	42.3	42.3	35.0	35.0	35.0
Max. Overcurrent Protection	60 amps	60 amps	60 amps	50 amps	50 amps	50 amps
Entrance Size Power Supply	1⅛”	1⅛”	1⅛”	1⅛”	1⅛”	1⅛”
Entrance Size Control Voltage	⅞”	⅞”	⅞”	⅞”	⅞”	⅞”
Operating / Ship Weights (lbs)	533 / 555	538 / 560	543 / 565	533 / 555	538 / 560	543 / 565

[1] Wire size should be determined in accordance with National Electrical Codes. Extensive wire runs will require larger wire sizes.
[2] Must use time-delay fuses or HACR-type circuit breakers of the same size as noted.

Notes

- Always check the S&R plate for electrical data on the unit being installed.
- Test data was use to calculate the MOP and MCA.

			Outdoor Ambient Temperature																							
			65ºF				75ºF				85ºF				95ºF				105ºF				115ºF			
			Entering Indoor Wet Bulb Temperature																							
IDB	Airflow		59	63	67	71	59	63	67	71	59	63	67	71	59	63	67	71	59	63	67	71	59	63	67	71
70	889	MBh	22.7	23.5	25.8	-	22.2	23.0	25.2	-	21.7	22.4	24.6	-	21.1	21.9	24.0	-	20.1	20.8	22.8	-	18.6	19.3	21.1	-
		S/T	0.81	0.68	0.47	-	0.84	0.70	0.48	-	0.86	0.72	0.50	-	0.89	0.74	0.51	-	0.92	0.77	0.53	-	0.93	0.77	0.54	-
		ΔT	19	16	12	-	19	17	13	-	19	17	13	-	19	17	13	-	19	17	13	-	18	15	12	-
		kW	1.44	1.47	1.51	-	1.55	1.58	1.64	-	1.65	1.69	1.74	-	1.74	1.78	1.84	-	1.81	1.86	1.92	-	1.88	1.92	1.99	-
		Amps	6.6	6.8	6.9	-	7.1	7.2	7.4	-	7.6	7.7	8.0	-	8.0	8.2	8.4	-	8.5	8.7	8.9	-	8.9	9.1	9.4	-
		Hi PR	236	254	269	-	265	286	302	-	302	325	343	-	344	370	391	-	387	416	439	-	427	460	485	-
		Lo PR	113	120	131	-	119	127	138	-	124	132	144	-	130	138	151	-	136	145	158	-	141	150	164	-
	792	MBh	22.0	22.8	25.0	-	21.5	22.3	24.5	-	21.0	21.8	23.9	-	20.5	21.3	23.3	-	19.5	20.2	22.1	-	18.0	18.7	20.5	-
		S/T	0.77	0.64	0.45	-	0.80	0.67	0.46	-	0.82	0.68	0.47	-	0.85	0.71	0.49	-	0.88	0.73	0.51	-	0.88	0.74	0.51	-
		ΔT	20	17	13	-	20	17	13	-	20	17	13	-	20	17	13	-	20	17	13	-	19	16	12	-
		kW	1.42	1.46	1.50	-	1.54	1.57	1.62	-	1.64	1.67	1.73	-	1.72	1.76	1.82	-	1.80	1.84	1.90	-	1.86	1.91	1.97	-
		Amps	6.6	6.7	6.9	-	7.0	7.2	7.4	-	7.5	7.7	7.9	-	8.0	8.1	8.4	-	8.4	8.6	8.8	-	8.8	9.0	9.3	-
		Hi PR	234	252	266	-	263	283	299	-	299	322	340	-	340	366	387	-	383	412	435	-	423	455	481	-
		Lo PR	111	119	129	-	118	125	137	-	122	130	142	-	129	137	149	-	135	143	157	-	139	148	162	-
	694	MBh	20.3	21.1	23.1	-	19.9	20.6	22.6	-	19.4	20.1	22.0	-	18.9	19.6	21.5	-	18.0	18.6	20.4	-	16.7	17.3	18.9	-
		S/T	0.74	0.62	0.43	-	0.77	0.64	0.45	-	0.79	0.66	0.46	-	0.82	0.68	0.47	-	0.85	0.71	0.49	-	0.85	0.71	0.49	-
		ΔT	20	17	13	-	20	18	13	-	20	18	13	-	20	18	13	-	20	17	13	-	19	16	12	-
		kW	1.39	1.42	1.47	-	1.50	1.53	1.58	-	1.60	1.63	1.69	-	1.68	1.72	1.78	-	1.75	1.79	1.85	-	1.82	1.86	1.92	-
		Amps	6.4	6.6	6.7	-	6.9	7.0	7.2	-	7.4	7.5	7.7	-	7.8	7.9	8.2	-	8.2	8.4	8.6	-	8.6	8.8	9.1	-
		Hi PR	227	244	258	-	255	274	290	-	290	312	329	-	330	355	375	-	371	400	422	-	410	442	466	-
		Lo PR	108	115	126	-	114	122	133	-	119	126	138	-	125	133	145	-	131	139	152	-	135	144	157	-
75	889	MBh	23.1	23.8	25.7	27.6	22.6	23.2	25.1	27.0	22.0	22.7	24.5	26.3	21.5	**22.1**	23.9	25.7	20.4	21.0	22.7	24.4	18.9	19.5	21.1	22.6
		S/T	0.92	0.82	0.62	0.40	0.95	0.85	0.64	0.41	0.98	0.87	0.66	0.43	1.00	**0.90**	0.68	0.44	1.00	0.94	0.71	0.46	1.00	0.94	0.71	0.46
		ΔT	22	20	17	11	22	20	17	12	22	20	17	12	22	**21**	17	12	21	20	17	12	20	19	16	11
		kW	1.45	1.48	1.53	1.58	1.56	1.60	1.65	1.71	1.66	1.70	1.76	1.82	1.75	**1.79**	1.85	1.92	1.83	1.87	1.94	2.00	1.90	1.94	2.01	2.08
		Amps	6.7	6.8	7.0	7.2	7.1	7.3	7.5	7.7	7.7	7.8	8.0	8.3	8.1	**8.3**	8.5	8.8	8.5	8.7	9.0	9.3	9.0	9.2	9.5	9.8
		Hi PR	239	257	271	283	268	288	305	318	305	328	346	361	347	**374**	395	412	391	420	444	463	432	464	490	512
		Lo PR	114	121	132	141	120	128	140	149	125	133	145	154	131	**140**	152	162	138	146	160	170	142	151	165	176
	792	MBh	22.4	23.1	25.0	26.8	21.9	22.5	24.4	26.2	21.4	22.0	23.8	25.6	20.9	**21.5**	23.2	24.9	19.8	20.4	22.1	23.7	18.4	18.9	20.5	22.0
		S/T	0.88	0.78	0.59	0.38	0.91	0.81	0.61	0.40	0.93	0.83	0.63	0.41	0.96	**0.86**	0.65	0.42	1.00	0.89	0.68	0.43	1.00	0.90	0.68	0.44
		ΔT	23	21	17	12	23	21	17	12	23	21	17	12	23	**21**	18	12	23	21	17	12	21	20	16	11
		kW	1.44	1.47	1.52	1.57	1.55	1.58	1.64	1.69	1.65	1.69	1.74	1.80	1.74	**1.78**	1.84	1.90	1.82	1.86	1.92	1.99	1.88	1.92	1.99	2.06
		Amps	6.6	6.8	6.9	7.2	7.1	7.2	7.4	7.7	7.6	7.7	8.0	8.2	8.0	**8.2**	8.4	8.7	8.5	8.7	8.9	9.2	8.9	9.1	9.4	9.7
		Hi PR	237	255	269	280	265	286	302	315	302	325	343	358	344	**370**	391	407	387	416	439	458	427	460	486	506
		Lo PR	113	120	131	139	119	127	138	147	124	132	144	153	130	**138**	151	161	136	145	158	168	141	150	164	174
	694	MBh	20.7	21.3	23.1	24.8	20.2	20.8	22.5	24.2	19.7	20.3	22.0	23.6	19.2	**19.8**	21.5	23.0	18.3	18.8	20.4	21.9	16.9	17.4	18.9	20.3
		S/T	0.84	0.76	0.57	0.37	0.88	0.78	0.59	0.38	0.90	0.80	0.61	0.39	0.93	**0.83**	0.63	0.40	0.96	0.86	0.65	0.42	0.97	0.87	0.66	0.42
		ΔT	23	21	17	12	23	22	18	12	23	22	18	12	24	**22**	18	12	23	21	18	12	22	20	16	11
		kW	1.40	1.43	1.48	1.53	1.51	1.54	1.60	1.65	1.61	1.65	1.70	1.76	1.70	**1.73**	1.79	1.85	1.77	1.81	1.87	1.93	1.83	1.87	1.94	2.00
		Amps	6.5	6.6	6.8	7.0	6.9	7.1	7.3	7.5	7.4	7.6	7.8	8.0	7.8	**8.0**	8.2	8.5	8.3	8.5	8.7	9.0	8.7	8.9	9.1	9.5
		Hi PR	229	247	261	272	257	277	293	305	293	315	333	347	333	**359**	379	395	375	404	426	445	414	446	471	491
		Lo PR	109	116	127	135	115	123	134	143	120	128	139	148	126	**134**	146	156	132	140	153	163	137	145	159	169

IDB: Entering Indoor Dry Bulb Temperature

Shaded area reflects ACCA (TVA) conditions.

kW = Total system power

High and low pressures are measured at the liquid and suction access fittings.

Amps: Unit amps (comp.+ evaporator + condenser fan motors)

			Outdoor Ambient Temperature																							
			65ºF				75ºF				85ºF				95ºF				105ºF				115ºF			
			Entering Indoor Wet Bulb Temperature																							
IDB	Airflow		59	63	67	71	59	63	67	71	59	63	67	71	59	63	67	71	59	63	67	71	59	63	67	71
80	889	MBh	23.5	24.0	25.7	27.4	23.0	23.5	25.1	26.8	22.4	22.9	24.5	26.2	21.9	22.3	23.9	25.5	20.8	21.2	22.7	24.2	19.2	19.7	21.0	22.5
		S/T	1.00	0.95	0.77	0.57	1.00	1.00	0.80	0.60	1.00	1.00	0.82	0.61	1.00	1.00	0.84	0.63	1.00	1.00	0.88	0.65	1.00	1.00	0.88	0.66
		ΔT	24	23	20	16	24	24	21	17	23	24	21	17	23	23	21	17	21	22	21	16	20	20	19	15
		kW	1.46	1.49	1.54	1.59	1.58	1.61	1.66	1.72	1.68	1.72	1.77	1.83	1.77	1.81	1.87	1.94	1.85	1.89	1.95	2.02	1.91	1.96	2.02	2.09
		Amps	6.7	6.9	7.1	7.3	7.2	7.3	7.5	7.8	7.7	7.9	8.1	8.4	8.2	8.3	8.6	8.9	8.6	8.8	9.1	9.4	9.1	9.3	9.5	9.9
		Hi PR	241	260	274	286	271	291	308	321	308	331	350	365	351	377	399	416	395	425	448	468	436	469	495	517
		Lo PR	115	122	133	142	121	129	141	150	126	134	147	156	133	141	154	164	139	148	161	172	144	153	167	178
	792	MBh	22.8	23.3	24.9	26.6	22.3	22.8	24.3	26.0	21.8	22.2	23.8	25.4	21.2	21.7	**23.2**	24.8	20.2	20.6	22.0	23.5	18.7	19.1	20.4	21.8
		S/T	0.96	0.90	0.73	0.55	1.00	0.93	0.76	0.57	1.00	0.96	0.78	0.58	1.00	0.99	**0.80**	0.60	1.00	1.00	0.84	0.62	1.00	1.00	0.84	0.63
		ΔT	25	24	21	17	26	25	21	17	25	25	22	17	25	25	**22**	17	23	24	21	17	22	22	20	16
		kW	1.45	1.48	1.53	1.58	1.56	1.60	1.65	1.71	1.66	1.70	1.76	1.82	1.75	1.79	**1.86**	1.92	1.83	1.87	1.94	2.00	1.90	1.94	2.01	2.08
		Amps	6.7	6.8	7.0	7.2	7.1	7.3	7.5	7.7	7.7	7.8	8.0	8.3	8.1	8.3	**8.5**	8.8	8.5	8.7	9.0	9.3	9.0	9.2	9.5	9.8
		Hi PR	239	257	271	283	268	288	305	318	305	328	346	361	347	374	**395**	412	391	420	444	463	432	464	490	512
		Lo PR	114	121	132	141	120	128	140	149	125	133	145	155	131	140	**152**	162	138	146	160	170	142	151	165	176
	694	MBh	21.1	21.5	23.0	24.6	20.6	21.0	22.5	24.0	20.1	20.5	21.9	23.4	19.6	20.0	21.4	22.9	18.6	19.0	20.3	21.7	17.2	17.6	18.8	20.1
		S/T	0.93	0.87	0.71	0.53	0.96	0.90	0.73	0.55	0.98	0.92	0.75	0.56	1.02	0.95	0.78	0.58	1.05	0.99	0.81	0.60	1.06	1.00	0.81	0.61
		ΔT	26	25	22	17	26	25	22	17	26	25	22	17	26	25	22	18	26	25	22	17	24	23	20	16
		kW	1.41	1.44	1.49	1.54	1.52	1.56	1.61	1.66	1.62	1.66	1.71	1.77	1.71	1.75	1.81	1.87	1.78	1.82	1.89	1.95	1.85	1.89	1.95	2.02
		Amps	6.5	6.7	6.8	7.1	7.0	7.1	7.3	7.5	7.5	7.6	7.8	8.1	7.9	8.1	8.3	8.6	8.3	8.5	8.8	9.1	8.8	9.0	9.2	9.5
		Hi PR	232	249	263	275	260	280	295	308	296	318	336	351	337	362	383	399	379	408	431	449	419	451	476	496
		Lo PR	110	117	128	136	117	124	135	144	121	129	141	150	127	135	148	157	133	142	155	165	138	147	160	171
85	889	MBh	23.9	24.4	25.5	27.2	23.4	23.8	24.9	26.6	22.8	23.2	24.3	26.0	22.2	22.7	23.7	25.3	21.1	21.5	22.6	24.1	19.6	20.0	20.9	22.3
		S/T	1.00	1.00	0.92	0.75	1.00	1.00	0.95	0.77	1.00	1.00	0.98	0.79	1.00	1.00	1.00	0.82	1.00	1.00	1.00	0.85	1.00	1.00	1.00	0.86
		ΔT	25	25	24	21	24	25	25	21	24	24	25	21	23	23	25	21	22	22	23	21	20	21	22	20
		kW	1.47	1.50	1.55	1.61	1.59	1.62	1.68	1.74	1.69	1.73	1.79	1.85	1.78	1.83	1.89	1.95	1.86	1.91	1.97	2.04	1.93	1.97	2.04	2.11
		Amps	6.8	6.9	7.1	7.3	7.2	7.4	7.6	7.8	7.8	7.9	8.2	8.4	8.2	8.4	8.6	8.9	8.7	8.9	9.1	9.4	9.1	9.3	9.6	9.9
		Hi PR	244	262	277	289	273	294	311	324	311	335	353	369	354	381	403	420	399	429	453	472	440	474	500	522
		Lo PR	116	123	135	144	123	130	142	152	127	136	148	158	134	142	155	166	140	149	163	174	145	154	169	179
	792	MBh	23.2	23.7	24.8	26.4	22.7	23.1	24.2	25.8	22.1	22.6	23.6	25.2	21.6	22.0	23.1	24.6	20.5	20.9	21.9	23.4	19.0	19.4	20.3	21.6
		S/T	1.00	0.97	0.88	0.71	1.00	1.00	0.91	0.74	1.00	1.00	0.93	0.76	1.00	1.00	0.96	0.78	1.00	1.00	1.00	0.81	1.00	1.00	1.00	0.82
		ΔT	27	27	25	22	26	27	26	22	26	26	26	22	25	26	26	22	24	24	25	22	22	23	24	21
		kW	1.46	1.49	1.54	1.59	1.58	1.61	1.66	1.72	1.68	1.72	1.77	1.83	1.77	1.81	1.87	1.94	1.85	1.89	1.95	2.02	1.91	1.96	2.02	2.09
		Amps	6.7	6.9	7.1	7.3	7.2	7.3	7.5	7.8	7.7	7.9	8.1	8.4	8.2	8.3	8.6	8.9	8.6	8.8	9.1	9.4	9.1	9.3	9.5	9.9
		Hi PR	241	260	274	286	271	291	308	321	308	331	350	365	351	377	399	416	395	425	448	468	436	469	495	517
		Lo PR	115	122	133	142	121	129	141	150	126	134	147	156	133	141	154	164	139	148	161	172	144	153	167	178
	694	MBh	21.4	21.8	22.9	24.4	20.9	21.3	22.3	23.8	20.4	20.8	21.8	23.3	19.9	20.3	21.3	22.7	18.9	19.3	20.2	21.6	17.5	17.9	18.7	20.0
		S/T	0.97	0.94	0.85	0.69	1.00	0.97	0.88	0.71	1.00	1.00	0.90	0.73	1.00	1.00	0.93	0.75	1.00	1.00	0.96	0.78	1.00	1.00	0.97	0.79
		ΔT	28	27	26	22	28	27	26	22	27	27	26	22	26	27	26	23	25	26	26	22	23	24	24	21
		kW	1.42	1.45	1.50	1.55	1.54	1.57	1.62	1.68	1.64	1.67	1.73	1.79	1.72	1.76	1.82	1.89	1.80	1.84	1.90	1.97	1.86	1.91	1.97	2.04
		Amps	6.6	6.7	6.9	7.1	7.0	7.2	7.4	7.6	7.5	7.7	7.9	8.2	8.0	8.1	8.4	8.6	8.4	8.6	8.8	9.1	8.8	9.0	9.3	9.6
		Hi PR	234	252	266	277	263	283	298	311	299	321	339	354	340	366	387	403	383	412	435	454	423	455	481	501
		Lo PR	111	119	129	138	118	125	137	146	122	130	142	151	129	137	149	159	135	143	156	167	139	148	162	172

IDB: Entering Indoor Dry Bulb Temperature

Shaded area reflects AHRI (TVA) conditions.

kW = Total system power

High and low pressures are measured at the liquid and suction access fittings.

Amps: Unit amps (comp.+ evaporator + condenser fan motors)

			Outdoor Ambient Temperature																							
			65ºF				75ºF				85ºF				95ºF				105ºF				115ºF			
			Entering Indoor Wet Bulb Temperature																							
IDB	Airflow		59	63	67	71	59	63	67	71	59	63	67	71	59	63	67	71	59	63	67	71	59	63	67	71
70	1164	MBh	29.7	30.8	33.7	-	29.0	30.1	32.9	-	28.3	29.4	32.2	-	27.6	28.6	31.4	-	26.3	27.2	29.8	-	24.3	25.2	27.6	-
		S/T	0.80	0.67	0.46	-	0.83	0.69	0.48	-	0.85	0.71	0.49	-	0.88	0.73	0.51	-	0.91	0.76	0.53	-	0.92	0.77	0.53	-
		ΔT	19	16	12	-	19	16	12	-	19	16	13	-	19	17	13	-	19	16	12	-	18	15	12	-
		kW	1.98	2.03	2.09	-	2.13	2.18	2.25	-	2.26	2.31	2.39	-	2.38	2.43	2.51	-	2.48	2.53	2.61	-	2.56	2.62	2.71	-
		Amps	8.2	8.4	8.6	-	8.8	9.0	9.2	-	9.5	9.7	9.9	-	10.0	10.2	10.6	-	10.6	10.8	11.2	-	11.2	11.4	11.8	-
		Hi PR	245	263	278	-	275	295	312	-	312	336	355	-	356	383	404	-	400	431	455	-	442	476	502	-
		Lo PR	111	118	129	-	117	124	136	-	122	129	141	-	128	136	148	-	134	142	155	-	138	147	161	-
	1037	MBh	28.8	29.9	32.8	-	28.2	29.2	32.0	-	27.5	28.5	31.2	-	26.8	27.8	30.5	-	25.5	26.4	28.9	-	23.6	24.5	26.8	-
		S/T	0.76	0.64	0.44	-	0.79	0.66	0.46	-	0.81	0.68	0.47	-	0.84	0.70	0.48	-	0.87	0.73	0.50	-	0.88	0.73	0.51	-
		ΔT	20	17	13	-	20	17	13	-	20	17	13	-	20	17	13	-	20	17	13	-	18	16	12	-
		kW	1.97	2.01	2.07	-	2.12	2.16	2.23	-	2.25	2.29	2.37	-	2.36	2.41	2.49	-	2.46	2.51	2.59	-	2.54	2.60	2.68	-
		Amps	8.2	8.3	8.6	-	8.7	8.9	9.2	-	9.4	9.6	9.9	-	9.9	10.2	10.5	-	10.5	10.7	11.1	-	11.1	11.3	11.7	-
		Hi PR	242	261	275	-	272	293	309	-	309	333	351	-	352	379	400	-	396	426	450	-	438	471	497	-
		Lo PR	110	117	127	-	116	123	135	-	120	128	140	-	126	135	147	-	133	141	154	-	137	146	159	-
	910	MBh	26.6	27.6	30.2	-	26.0	26.9	29.5	-	25.4	26.3	28.8	-	24.8	25.7	28.1	-	23.5	24.4	26.7	-	21.8	22.6	24.7	-
		S/T	0.74	0.61	0.43	-	0.76	0.64	0.44	-	0.78	0.65	0.45	-	0.81	0.67	0.47	-	0.84	0.70	0.48	-	0.85	0.71	0.49	-
		ΔT	20	17	13	-	20	17	13	-	20	17	13	-	20	17	13	-	20	17	13	-	19	16	12	-
		kW	1.92	1.96	2.02	-	2.07	2.11	2.17	-	2.19	2.24	2.31	-	2.30	2.35	2.43	-	2.40	2.45	2.53	-	2.48	2.53	2.62	-
		Amps	8.0	8.1	8.4	-	8.5	8.7	8.9	-	9.2	9.3	9.6	-	9.7	9.9	10.2	-	10.3	10.5	10.8	-	10.8	11.0	11.4	-
		Hi PR	235	253	267	-	264	284	300	-	300	323	341	-	342	368	388	-	384	414	437	-	425	457	482	-
		Lo PR	106	113	124	-	112	120	130	-	117	124	136	-	123	130	142	-	129	137	149	-	133	141	154	-
75	1164	MBh	30.2	31.1	33.7	36.1	29.5	30.4	32.9	35.3	28.8	29.7	32.1	34.5	28.1	**28.9**	31.3	33.6	26.7	27.5	29.8	31.9	24.7	25.5	27.6	29.6
		S/T	0.91	0.81	0.62	0.40	0.94	0.84	0.64	0.41	0.97	0.87	0.65	0.42	1.00	**0.89**	0.68	0.43	1.00	0.93	0.70	0.45	1.00	0.93	0.71	0.46
		ΔT	22	20	16	11	22	20	17	11	22	20	17	11	22	**20**	17	12	21	20	16	11	20	19	15	11
		kW	2.00	2.04	2.10	2.17	2.15	2.20	2.26	2.34	2.28	2.33	2.41	2.48	2.40	**2.45**	2.53	2.61	2.50	2.55	2.64	2.72	2.58	2.64	2.73	2.82
		Amps	8.3	8.5	8.7	9.0	8.9	9.0	9.3	9.6	9.5	9.7	10.0	10.4	10.1	**10.3**	10.6	11.0	10.7	10.9	11.3	11.6	11.3	11.5	11.9	12.3
		Hi PR	247	266	281	293	277	298	315	329	315	339	358	374	359	**387**	408	426	404	435	459	479	447	481	507	529
		Lo PR	112	119	130	138	118	126	137	146	123	131	143	152	129	**137**	150	160	135	144	157	167	140	149	162	173
	1037	MBh	29.3	30.2	32.7	35.1	28.6	29.5	31.9	34.3	28.0	28.8	31.2	33.4	27.3	**28.1**	30.4	32.6	25.9	26.7	28.9	31.0	24.0	24.7	26.8	28.7
		S/T	0.87	0.78	0.59	0.38	0.90	0.80	0.61	0.39	0.92	0.83	0.62	0.40	0.95	**0.85**	0.64	0.41	0.99	0.88	0.67	0.43	1.00	0.89	0.67	0.43
		ΔT	23	21	17	12	23	21	17	12	23	21	17	12	23	**21**	17	12	23	21	17	12	21	20	16	11
		kW	1.98	2.03	2.09	2.15	2.13	2.18	2.25	2.32	2.26	2.31	2.39	2.46	2.38	**2.43**	2.51	2.59	2.48	2.53	2.62	2.70	2.56	2.62	2.71	2.80
		Amps	8.2	8.4	8.6	8.9	8.8	9.0	9.2	9.5	9.5	9.7	9.9	10.3	10.0	**10.2**	10.6	10.9	10.6	10.8	11.2	11.5	11.2	11.4	11.8	12.2
		Hi PR	245	263	278	290	275	296	312	325	312	336	355	370	356	**383**	404	422	400	431	455	474	442	476	502	524
		Lo PR	111	118	129	137	117	124	136	145	122	129	141	150	128	**136**	148	158	134	142	155	166	138	147	161	171
	910	MBh	27.1	27.9	30.2	32.4	26.4	27.2	29.5	31.6	25.8	26.6	28.8	30.9	25.2	**25.9**	28.1	30.1	23.9	24.6	26.7	28.6	22.2	22.8	24.7	26.5
		S/T	0.84	0.75	0.57	0.36	0.87	0.78	0.59	0.38	0.89	0.80	0.60	0.39	0.92	**0.82**	0.62	0.40	0.95	0.85	0.65	0.41	0.96	0.86	0.65	0.42
		ΔT	23	21	17	12	23	21	17	12	23	21	18	12	23	**22**	18	12	23	21	17	12	22	20	16	11
		kW	1.94	1.98	2.04	2.10	2.08	2.13	2.19	2.26	2.21	2.26	2.33	2.40	2.32	**2.37**	2.45	2.53	2.42	2.47	2.55	2.63	2.50	2.56	2.64	2.73
		Amps	8.0	8.2	8.4	8.7	8.6	8.8	9.0	9.3	9.2	9.4	9.7	10.0	9.8	**10.0**	10.3	10.6	10.3	10.6	10.9	11.3	10.9	11.1	11.5	11.9
		Hi PR	237	255	270	281	266	287	303	316	303	326	344	359	345	**371**	392	409	388	418	441	460	429	462	487	508
		Lo PR	107	114	125	133	113	121	132	140	118	125	137	146	124	**132**	144	153	130	138	151	161	134	143	156	166

IDB: Entering Indoor Dry Bulb Temperature

Shaded area reflects ACCA (TVA) conditions.

kW = Total system power

High and low pressures are measured at the liquid and suction access fittings.

Amps: Unit amps (comp.+ evaporator + condenser fan motors)

			Outdoor Ambient Temperature																							
			65ºF				75ºF				85ºF				95ºF				105ºF				115ºF			
			Entering Indoor Wet Bulb Temperature																							
IDB	Airflow		59	63	67	71	59	63	67	71	59	63	67	71	59	63	67	71	59	63	67	71	59	63	67	71
80	1164	MBh	30.7	31.4	33.6	35.9	30.0	30.7	32.8	35.0	29.3	30.0	32.0	34.2	28.6	29.2	31.2	33.4	27.2	27.8	29.7	31.7	25.2	25.7	27.5	29.4
		S/T	1.00	0.94	0.76	0.57	1.00	0.97	0.79	0.59	1.00	1.00	0.81	0.61	1.00	1.00	0.84	0.62	1.00	1.00	0.87	0.65	1.00	1.00	0.87	0.65
		ΔT	24	23	20	16	24	24	20	16	23	24	20	16	23	23	21	16	21	22	20	16	20	20	19	15
		kW	2.02	2.06	2.12	2.19	2.17	2.21	2.28	2.36	2.30	2.35	2.43	2.50	2.42	2.47	2.55	2.64	2.52	2.58	2.66	2.75	2.61	2.66	2.75	2.84
		Amps	8.3	8.5	8.8	9.0	8.9	9.1	9.4	9.7	9.6	9.8	10.1	10.4	10.2	10.4	10.7	11.1	10.8	11.0	11.4	11.7	11.4	11.6	12.0	12.4
		Hi PR	250	269	284	296	280	301	318	332	319	343	362	378	363	391	412	430	408	439	464	484	451	485	513	535
		Lo PR	113	120	131	140	119	127	139	148	124	132	144	153	130	139	151	161	137	145	159	169	141	150	164	175
	1037	MBh	29.9	30.5	32.6	34.8	29.2	29.8	31.8	34.0	28.5	29.1	31.1	33.2	27.8	28.4	**30.3**	32.4	26.4	27.0	28.8	30.8	24.4	25.0	26.7	28.5
		S/T	0.95	0.89	0.73	0.54	0.99	0.93	0.75	0.56	1.00	0.95	0.77	0.58	1.00	0.98	**0.80**	0.60	1.00	1.00	0.83	0.62	1.00	1.00	0.83	0.62
		ΔT	25	24	21	17	26	24	21	17	25	24	21	17	25	25	**21**	17	23	24	21	17	22	22	20	16
		kW	2.00	2.04	2.10	2.17	2.15	2.20	2.26	2.34	2.28	2.33	2.41	2.48	2.40	2.45	**2.53**	2.61	2.50	2.55	2.64	2.72	2.59	2.64	2.73	2.82
		Amps	8.3	8.5	8.7	9.0	8.9	9.0	9.3	9.6	9.5	9.7	10.0	10.4	10.1	10.3	**10.6**	11.0	10.7	10.9	11.3	11.6	11.3	11.5	11.9	12.3
		Hi PR	247	266	281	293	277	299	315	329	315	339	358	374	359	387	**408**	426	404	435	459	479	447	481	508	529
		Lo PR	112	119	130	138	118	126	137	146	123	131	143	152	129	137	**150**	160	135	144	157	167	140	149	162	173
	910	MBh	27.6	28.2	30.1	32.2	26.9	27.5	29.4	31.4	26.3	26.8	28.7	30.7	25.6	26.2	28.0	29.9	24.3	24.9	26.6	28.4	22.6	23.0	24.6	26.3
		S/T	0.92	0.86	0.70	0.52	0.95	0.89	0.73	0.54	0.98	0.91	0.74	0.56	1.01	0.94	0.77	0.57	1.05	0.98	0.80	0.60	1.05	0.99	0.80	0.60
		ΔT	26	24	21	17	26	25	22	17	26	25	22	17	26	25	22	17	26	25	21	17	24	23	20	16
		kW	1.95	1.99	2.05	2.12	2.10	2.14	2.21	2.28	2.23	2.28	2.35	2.42	2.34	2.39	2.47	2.55	2.44	2.49	2.57	2.66	2.52	2.58	2.66	2.75
		Amps	8.1	8.3	8.5	8.8	8.7	8.8	9.1	9.4	9.3	9.5	9.8	10.1	9.9	10.1	10.4	10.7	10.4	10.7	11.0	11.3	11.0	11.2	11.6	12.0
		Hi PR	240	258	272	284	269	290	306	319	306	329	348	363	349	375	396	413	392	422	446	465	433	466	492	513
		Lo PR	109	115	126	134	115	122	133	142	119	127	138	147	125	133	145	155	131	140	152	162	136	144	158	168
85	1164	MBh	31.3	31.9	33.4	35.6	30.6	31.1	32.6	34.8	29.8	30.4	31.8	34.0	29.1	29.7	31.1	33.1	27.6	28.2	29.5	31.5	25.6	26.1	27.3	29.2
		S/T	1.00	1.00	0.91	0.74	1.00	1.00	0.94	0.77	1.00	1.00	0.97	0.79	1.00	1.00	1.00	0.81	1.00	1.00	1.00	0.84	1.00	1.00	1.00	0.85
		ΔT	25	25	24	21	24	25	24	21	24	24	24	21	23	23	25	21	22	22	23	21	20	21	22	20
		kW	2.03	2.07	2.14	2.21	2.18	2.23	2.30	2.38	2.32	2.37	2.45	2.53	2.44	2.49	2.57	2.66	2.54	2.60	2.68	2.77	2.63	2.69	2.77	2.87
		Amps	8.4	8.6	8.8	9.1	9.0	9.2	9.5	9.8	9.7	9.9	10.2	10.5	10.3	10.5	10.8	11.2	10.9	11.1	11.4	11.8	11.5	11.7	12.1	12.5
		Hi PR	252	271	287	299	283	305	322	335	322	346	366	381	367	394	417	434	412	444	469	489	456	490	518	540
		Lo PR	114	121	133	141	121	128	140	149	125	133	146	155	132	140	153	163	138	147	160	171	143	152	166	176
	1037	MBh	30.4	31.0	32.4	34.6	29.7	30.2	31.7	33.8	29.0	29.5	30.9	33.0	28.3	28.8	30.2	32.2	26.8	27.4	28.7	30.6	24.9	25.3	26.5	28.3
		S/T	1.00	0.96	0.87	0.71	1.00	1.00	0.90	0.73	1.00	1.00	0.92	0.75	1.00	1.00	0.95	0.77	1.00	1.00	0.99	0.80	1.00	1.00	1.00	0.81
		ΔT	27	26	25	22	26	27	25	22	26	26	25	22	25	26	25	22	24	24	25	22	22	22	23	20
		kW	2.02	2.06	2.12	2.19	2.17	2.21	2.28	2.36	2.30	2.35	2.43	2.50	2.42	2.47	2.55	2.64	2.52	2.58	2.66	2.75	2.61	2.66	2.75	2.84
		Amps	8.3	8.5	8.8	9.0	8.9	9.1	9.4	9.7	9.6	9.8	10.1	10.4	10.2	10.4	10.7	11.1	10.8	11.0	11.4	11.7	11.4	11.6	12.0	12.4
		Hi PR	250	269	284	296	280	301	318	332	319	343	362	378	363	391	412	430	408	439	464	484	451	485	513	535
		Lo PR	113	120	131	140	119	127	139	148	124	132	144	153	130	139	151	161	137	145	159	169	141	150	164	175
	910	MBh	28.0	28.6	29.9	31.9	27.4	27.9	29.2	31.2	26.7	27.2	28.5	30.4	26.1	26.6	27.8	29.7	24.8	25.3	26.4	28.2	22.9	23.4	24.5	26.1
		S/T	0.96	0.93	0.84	0.68	1.00	0.96	0.87	0.70	1.00	0.99	0.89	0.72	1.00	1.00	0.92	0.75	1.00	1.00	0.95	0.77	1.00	1.00	0.96	0.78
		ΔT	27	27	25	22	28	27	26	22	27	27	26	22	26	27	26	22	25	26	26	22	23	24	24	21
		kW	1.97	2.01	2.07	2.14	2.12	2.16	2.23	2.30	2.25	2.29	2.37	2.44	2.36	2.41	2.49	2.57	2.46	2.51	2.59	2.68	2.54	2.60	2.68	2.77
		Amps	8.2	8.3	8.6	8.8	8.7	8.9	9.2	9.5	9.4	9.6	9.9	10.2	9.9	10.2	10.5	10.8	10.5	10.7	11.1	11.4	11.1	11.3	11.7	12.1
		Hi PR	242	261	275	287	272	292	309	322	309	333	351	366	352	379	400	417	396	426	450	469	438	471	497	519
		Lo PR	110	117	127	136	116	123	134	143	120	128	140	149	126	134	147	156	132	141	154	164	137	146	159	169

IDB: Entering Indoor Dry Bulb Temperature

Shaded area reflects AHRI (TVA) conditions.

kW = Total system power

High and low pressures are measured at the liquid and suction access fittings.

Amps: Unit amps (comp.+ evaporator + condenser fan motors)

			Outdoor Ambient Temperature																							
			65ºF				75ºF				85ºF				95ºF				105ºF				115ºF			
			Entering Indoor Wet Bulb Temperature																							
IDB	Airflow		59	63	67	71	59	63	67	71	59	63	67	71	59	63	67	71	59	63	67	71	59	63	67	71
70	1124	MBh	29.1	30.1	33.0	-	28.4	29.4	32.2	-	27.7	28.7	31.5	-	27.0	28.0	30.7	-	25.7	26.6	29.2	-	23.8	24.7	27.0	-
		S/T	0.79	0.66	0.46	-	0.82	0.68	0.47	-	0.84	0.70	0.48	-	0.86	0.72	0.50	-	0.90	0.75	0.52	-	0.91	0.76	0.52	-
		ΔT	19	16	12	-	19	16	12	-	19	16	12	-	19	17	13	-	19	16	12	-	18	15	12	-
		KW	1.95	1.99	2.05	-	2.09	2.14	2.20	-	2.22	2.27	2.34	-	2.34	2.39	2.46	-	2.43	2.49	2.57	-	2.52	2.57	2.66	-
		AMPS	8.7	8.9	9.1	-	9.3	9.5	9.7	-	10.0	10.2	10.5	-	10.6	10.8	11.1	-	11.1	11.4	11.7	-	11.7	12.0	12.3	-
		HI PR	241	259	273	-	270	290	307	-	307	330	349	-	350	376	397	-	393	423	447	-	435	468	494	-
		LO PR	112	119	130	-	118	125	137	-	123	130	142	-	129	137	150	-	135	144	157	-	140	148	162	-
	1001	MBh	28.2	29.2	32.0	-	27.6	28.6	31.3	-	26.9	27.9	30.6	-	26.3	27.2	29.8	-	24.9	25.8	28.3	-	23.1	23.9	26.2	-
		S/T	0.75	0.63	0.43	-	0.78	0.65	0.45	-	0.80	0.67	0.46	-	0.82	0.69	0.48	-	0.86	0.71	0.50	-	0.86	0.72	0.50	-
		ΔT	19	17	13	-	20	17	13	-	20	17	13	-	20	17	13	-	20	17	13	-	18	16	12	-
		KW	1.93	1.97	2.03	-	2.08	2.12	2.19	-	2.20	2.25	2.32	-	2.32	2.37	2.44	-	2.41	2.47	2.55	-	2.50	2.55	2.64	-
		AMPS	8.6	8.8	9.1	-	9.2	9.4	9.7	-	9.9	10.1	10.4	-	10.5	10.7	11.0	-	11.0	11.3	11.6	-	11.6	11.9	12.2	-
		HI PR	238	256	271	-	267	288	304	-	304	327	345	-	346	372	393	-	389	419	442	-	430	463	489	-
		LO PR	111	118	128	-	117	124	136	-	121	129	141	-	127	136	148	-	134	142	155	-	138	147	160	-
	878	MBh	26.0	27.0	29.6	-	25.4	26.4	28.9	-	24.8	25.7	28.2	-	24.2	25.1	27.5	-	23.0	23.9	26.1	-	21.3	22.1	24.2	-
		S/T	0.72	0.61	0.42	-	0.75	0.63	0.43	-	0.77	0.64	0.45	-	0.80	0.66	0.46	-	0.83	0.69	0.48	-	0.83	0.70	0.48	-
		ΔT	20	17	13	-	20	17	13	-	20	17	13	-	20	17	13	-	20	17	13	-	19	16	12	-
		KW	1.89	1.93	1.98	-	2.03	2.07	2.13	-	2.15	2.20	2.27	-	2.26	2.31	2.38	-	2.35	2.41	2.48	-	2.43	2.49	2.57	-
		AMPS	8.4	8.6	8.8	-	9.0	9.2	9.4	-	9.7	9.9	10.1	-	10.2	10.4	10.7	-	10.8	11.0	11.3	-	11.3	11.6	11.9	-
		HI PR	231	249	262	-	259	279	295	-	295	317	335	-	336	361	382	-	378	406	429	-	417	449	474	-
		LO PR	107	114	124	-	113	120	132	-	118	125	137	-	124	132	144	-	130	138	150	-	134	143	156	-
75	1124	MBh	29.6	30.4	32.9	35.4	28.9	29.7	32.2	34.5	28.2	29.0	31.4	33.7	27.5	**28.3**	30.6	32.9	26.1	26.9	29.1	31.2	24.2	24.9	27.0	28.9
		S/T	0.90	0.80	0.61	0.39	0.93	0.83	0.63	0.40	0.95	0.85	0.64	0.41	0.98	**0.88**	0.67	0.43	1.00	0.91	0.69	0.44	1.00	0.92	0.70	0.45
		ΔT	22	20	16	11	22	20	17	11	22	20	17	11	22	**20**	17	12	21	20	16	11	20	19	15	11
		KW	1.96	2.00	2.06	2.13	2.11	2.15	2.22	2.29	2.24	2.29	2.36	2.44	2.36	**2.41**	2.49	2.57	2.45	2.51	2.59	2.68	2.54	2.59	2.68	2.77
		AMPS	8.8	8.9	9.2	9.5	9.4	9.6	9.8	10.1	10.0	10.3	10.5	10.9	10.6	**10.9**	11.2	11.5	11.2	11.5	11.8	12.2	11.8	12.1	12.4	12.8
		HI PR	243	261	276	288	273	293	310	323	310	334	352	368	353	**380**	401	419	397	428	451	471	439	472	499	520
		LO PR	113	120	131	139	119	127	138	147	124	132	144	153	130	**138**	151	161	136	145	158	169	141	150	164	174
	1001	MBh	28.7	29.5	32.0	34.3	28.0	28.9	31.2	33.5	27.4	28.2	30.5	32.7	26.7	**27.5**	29.8	31.9	25.4	26.1	28.3	30.3	23.5	24.2	26.2	28.1
		S/T	0.85	0.76	0.58	0.37	0.89	0.79	0.60	0.39	0.91	0.81	0.61	0.40	0.94	**0.84**	0.63	0.41	0.97	0.87	0.66	0.42	0.98	0.88	0.66	0.43
		ΔT	23	21	17	12	23	21	17	12	23	21	17	12	23	**21**	17	12	23	21	17	12	21	19	16	11
		KW	1.95	1.99	2.05	2.11	2.09	2.14	2.20	2.28	2.22	2.27	2.34	2.42	2.34	**2.39**	2.46	2.55	2.43	2.49	2.57	2.65	2.52	2.57	2.66	2.75
		AMPS	8.7	8.9	9.1	9.4	9.3	9.5	9.7	10.1	10.0	10.2	10.5	10.8	10.6	**10.8**	11.1	11.4	11.1	11.4	11.7	12.1	11.7	12.0	12.3	12.7
		HI PR	241	259	273	285	270	290	307	320	307	330	349	364	350	**376**	397	414	393	423	447	466	435	468	494	515
		LO PR	112	119	130	138	118	125	137	146	123	130	142	152	129	**137**	150	159	135	144	157	167	140	148	162	173
	878	MBh	26.5	27.3	29.5	31.7	25.9	26.6	28.8	30.9	25.3	26.0	28.1	30.2	24.6	**25.4**	27.5	29.5	23.4	24.1	26.1	28.0	21.7	22.3	24.2	25.9
		S/T	0.82	0.74	0.56	0.36	0.85	0.76	0.58	0.37	0.88	0.78	0.59	0.38	0.90	**0.81**	0.61	0.39	0.94	0.84	0.64	0.41	0.95	0.85	0.64	0.41
		ΔT	23	21	17	12	23	21	17	12	23	21	17	12	23	**21**	18	12	23	21	17	12	21	20	16	11
		KW	1.90	1.94	2.00	2.06	2.04	2.09	2.15	2.22	2.17	2.22	2.29	2.36	2.28	**2.33**	2.40	2.48	2.37	2.43	2.50	2.59	2.46	2.51	2.59	2.68
		AMPS	8.5	8.7	8.9	9.2	9.1	9.3	9.5	9.8	9.7	9.9	10.2	10.5	10.3	**10.5**	10.8	11.2	10.9	11.1	11.4	11.8	11.4	11.7	12.0	12.4
		HI PR	233	251	265	277	262	282	298	310	298	320	338	353	339	**365**	385	402	382	411	434	452	422	454	479	500
		LO PR	108	115	126	134	114	122	133	142	119	126	138	147	125	**133**	145	154	131	139	152	162	135	144	157	167

IDB: Entering Indoor Dry Bulb Temperature

Shaded area reflects ACCA (TVA) conditions.

kW = Total system power

High and low pressures are measured at the liquid and suction access fittings.

Amps: Unit amps (comp.+ evaporator + condenser fan motors)

Design Subcooling, 12±3 °F @ the liquid access fitting connection AHRI 95 test conditions. Design Superheat 8±3 °F @ the compressor suction access fitting connection.

			Outdoor Ambient Temperature																							
			65ºF				75ºF				85ºF				95ºF				105ºF				115ºF			
			Entering Indoor Wet Bulb Temperature																							
IDB	Airflow		59	63	67	71	59	63	67	71	59	63	67	71	59	63	67	71	59	63	67	71	59	63	67	71
80	1124	MBh	30.1	30.7	32.8	35.1	29.4	30.0	32.1	34.3	28.7	29.3	31.3	33.5	28.0	28.6	30.6	32.7	26.6	27.2	29.0	31.0	24.6	25.2	26.9	28.7
		S/T	1.00	0.92	0.75	0.56	1.00	0.96	0.78	0.58	1.00	1.00	0.80	0.60	1.00	1.00	0.82	0.62	1.00	1.00	0.85	0.64	1.00	1.00	0.86	0.64
		ΔT	25	23	20	16	24	23	20	16	23	24	20	16	23	23	21	16	22	22	20	16	20	21	19	15
		KW	1.98	2.02	2.08	2.15	2.13	2.17	2.24	2.31	2.26	2.31	2.38	2.46	2.38	2.43	2.51	2.59	2.47	2.53	2.61	2.70	2.56	2.62	2.70	2.79
		AMPS	8.8	9.0	9.3	9.6	9.4	9.6	9.9	10.2	10.1	10.3	10.6	11.0	10.7	10.9	11.3	11.6	11.3	11.6	11.9	12.3	11.9	12.2	12.5	12.9
		HI PR	245	264	279	291	275	296	313	326	313	337	356	371	357	384	405	423	401	432	456	476	443	477	504	526
		LO PR	114	121	132	141	120	128	140	149	125	133	145	155	131	140	153	162	138	146	160	170	142	151	165	176
	1001	MBh	29.2	29.8	31.9	34.1	28.5	29.2	31.1	33.3	27.8	28.5	30.4	32.5	27.2	27.8	**29.7**	31.7	25.8	26.4	28.2	30.1	23.9	24.4	26.1	27.9
		S/T	0.94	0.88	0.72	0.53	0.97	0.91	0.74	0.55	1.00	0.93	0.76	0.57	1.00	0.96	**0.78**	0.59	1.00	1.00	0.81	0.61	1.00	1.00	0.82	0.61
		ΔT	25	24	21	17	25	24	21	17	25	24	21	17	25	25	**21**	17	24	24	21	17	22	22	20	16
		KW	1.96	2.00	2.06	2.13	2.11	2.15	2.22	2.29	2.24	2.29	2.36	2.44	2.36	2.41	**2.49**	2.57	2.45	2.51	2.59	2.68	2.54	2.60	2.68	2.77
		AMPS	8.8	8.9	9.2	9.5	9.4	9.6	9.8	10.1	10.0	10.3	10.5	10.9	10.6	10.9	**11.2**	11.5	11.2	11.5	11.8	12.2	11.8	12.1	12.4	12.8
		HI PR	243	261	276	288	273	293	310	323	310	334	352	368	353	380	**401**	419	397	428	452	471	439	472	499	520
		LO PR	113	120	131	139	119	127	138	147	124	132	144	153	130	138	**151**	161	136	145	158	169	141	150	164	174
	878	MBh	27.0	27.5	29.4	31.5	26.3	26.9	28.7	30.7	25.7	26.3	28.1	30.0	25.1	25.6	27.4	29.3	23.8	24.3	26.0	27.8	22.1	22.6	24.1	25.8
		S/T	0.90	0.85	0.69	0.52	0.94	0.88	0.71	0.53	0.96	0.90	0.73	0.55	0.99	0.93	0.76	0.57	1.03	0.97	0.79	0.59	1.04	0.97	0.79	0.59
		ΔT	26	24	21	17	26	25	22	17	26	25	22	17	26	25	22	17	26	25	21	17	24	23	20	16
		KW	1.92	1.96	2.02	2.08	2.06	2.10	2.17	2.24	2.19	2.23	2.30	2.38	2.30	2.35	2.42	2.50	2.39	2.45	2.53	2.61	2.48	2.53	2.61	2.70
		AMPS	8.6	8.7	9.0	9.3	9.1	9.3	9.6	9.9	9.8	10.0	10.3	10.6	10.4	10.6	10.9	11.3	11.0	11.2	11.5	11.9	11.5	11.8	12.1	12.5
		HI PR	236	254	268	279	264	285	301	313	301	324	342	357	343	369	389	406	385	415	438	457	426	458	484	505
		LO PR	109	116	127	135	116	123	134	143	120	128	139	149	126	134	147	156	132	141	154	164	137	145	159	169
85	1124	MBh	30.6	31.2	32.7	34.9	29.9	30.5	31.9	34.1	29.2	29.8	31.2	33.2	28.5	29.0	30.4	32.4	27.1	27.6	28.9	30.8	25.1	25.5	26.8	28.5
		S/T	1.00	0.99	0.90	0.73	1.00	1.00	0.93	0.75	1.00	1.00	0.95	0.77	1.00	1.00	0.98	0.80	1.00	1.00	1.00	0.83	1.00	1.00	1.00	0.84
		ΔT	25	25	24	21	24	25	24	21	24	24	24	21	23	24	24	21	22	23	24	21	20	21	22	20
		KW	1.99	2.03	2.10	2.16	2.14	2.19	2.26	2.33	2.28	2.33	2.40	2.48	2.39	2.45	2.53	2.61	2.49	2.55	2.63	2.72	2.58	2.64	2.73	2.82
		AMPS	8.9	9.1	9.3	9.6	9.5	9.7	10.0	10.3	10.2	10.4	10.7	11.1	10.8	11.0	11.4	11.7	11.4	11.7	12.0	12.4	12.0	12.3	12.6	13.1
		HI PR	248	267	282	294	278	299	316	330	316	340	359	375	360	388	409	427	405	436	461	480	448	482	509	531
		LO PR	115	122	134	142	122	129	141	150	126	134	147	156	133	141	154	164	139	148	161	172	144	153	167	178
	1001	MBh	29.7	30.3	31.7	33.8	29.0	29.6	31.0	33.1	28.3	28.9	30.3	32.3	27.6	28.2	29.5	31.5	26.3	26.8	28.0	29.9	24.3	24.8	26.0	27.7
		S/T	0.98	0.95	0.86	0.69	1.00	0.98	0.89	0.72	1.00	1.00	0.91	0.74	1.00	1.00	0.94	0.76	1.00	1.00	0.97	0.79	1.00	1.00	0.98	0.80
		ΔT	27	26	25	22	27	27	25	22	26	27	25	22	25	26	25	22	24	25	25	22	22	23	23	20
		KW	1.98	2.02	2.08	2.15	2.13	2.17	2.24	2.31	2.26	2.31	2.38	2.46	2.38	2.43	2.51	2.59	2.47	2.53	2.61	2.70	2.56	2.62	2.70	2.79
		AMPS	8.8	9.0	9.3	9.6	9.4	9.6	9.9	10.2	10.1	10.3	10.6	11.0	10.7	10.9	11.3	11.6	11.3	11.6	11.9	12.3	11.9	12.2	12.5	12.9
		HI PR	245	264	279	291	275	296	313	326	313	337	356	371	357	384	405	423	401	432	456	476	443	477	504	526
		LO PR	114	121	132	141	120	128	140	149	125	133	145	155	131	140	153	162	138	146	160	170	142	151	165	176
	878	MBh	27.4	28.0	29.3	31.2	26.8	27.3	28.6	30.5	26.2	26.7	27.9	29.8	25.5	26.0	27.2	29.1	24.2	24.7	25.9	27.6	22.5	22.9	24.0	25.6
		S/T	0.95	0.91	0.83	0.67	0.98	0.95	0.86	0.69	1.00	0.97	0.88	0.71	1.00	1.00	0.91	0.73	1.00	1.00	0.94	0.76	1.00	1.00	0.95	0.77
		ΔT	27	27	25	22	28	27	26	22	27	27	26	22	27	27	26	22	25	26	25	22	24	24	24	21
		KW	1.93	1.97	2.03	2.10	2.08	2.12	2.19	2.26	2.20	2.25	2.32	2.40	2.32	2.37	2.44	2.52	2.41	2.47	2.55	2.63	2.50	2.55	2.63	2.72
		AMPS	8.6	8.8	9.0	9.3	9.2	9.4	9.7	10.0	9.9	10.1	10.4	10.7	10.5	10.7	11.0	11.4	11.0	11.3	11.6	12.0	11.6	11.9	12.2	12.6
		HI PR	238	256	271	282	267	287	304	317	304	327	345	360	346	372	393	410	389	419	442	461	430	463	489	510
		LO PR	110	118	128	137	117	124	136	144	121	129	141	150	127	136	148	158	134	142	155	165	138	147	160	171

IDB: Entering Indoor Dry Bulb Temperature

Shaded area reflects AHRI (TVA) conditions.

kW = Total system power

High and low pressures are measured at the liquid and suction access fittings.

Amps: Unit amps (comp.+ evaporator + condenser fan motors)

Design Subcooling, 12±3 °F @ the liquid access fitting connection AHRI 95 test conditions. Design Superheat 8±3 °F @ the compressor suction access fitting connection.

			Outdoor Ambient Temperature																							
			65ºF				75ºF				85ºF				95ºF				105ºF				115ºF			
			Entering Indoor Wet Bulb Temperature																							
IDB	Airflow		59	63	67	71	59	63	67	71	59	63	67	71	59	63	67	71	59	63	67	71	59	63	67	71
70	1329	MBh	34.8	36.1	39.5	-	34.0	35.2	38.6	-	33.2	34.4	37.7	-	32.4	33.6	36.8	-	30.8	31.9	34.9	-	28.5	29.5	32.4	-
		S/T	0.79	0.66	0.46	-	0.82	0.69	0.48	-	0.84	0.70	0.49	-	0.87	0.73	0.50	-	0.90	0.75	0.52	-	0.91	0.76	0.53	-
		ΔT	19	17	13	-	19	17	13	-	19	17	13	-	19	17	13	-	19	17	13	-	18	16	12	-
		kW	2.39	2.44	2.51	-	2.57	2.63	2.71	-	2.73	2.79	2.88	-	2.87	2.94	3.03	-	2.99	3.06	3.16	-	3.10	3.17	3.27	-
		Amps	10.0	10.2	10.5	-	10.7	10.9	11.2	-	11.5	11.7	12.1	-	12.2	12.5	12.8	-	12.9	13.2	13.6	-	13.6	13.9	14.3	-
		Hi PR	249	268	283	-	280	301	318	-	318	342	361	-	362	390	412	-	407	438	463	-	450	484	512	-
		Lo PR	111	119	129	-	118	125	137	-	122	130	142	-	129	137	149	-	135	143	157	-	139	148	162	-
	1184	MBh	33.8	35.0	38.4	-	33.0	34.2	37.5	-	32.2	33.4	36.6	-	31.4	32.6	35.7	-	29.9	31.0	33.9	-	27.7	28.7	31.4	-
		S/T	0.76	0.63	0.44	-	0.78	0.65	0.45	-	0.80	0.67	0.46	-	0.83	0.69	0.48	-	0.86	0.72	0.50	-	0.87	0.72	0.50	-
		ΔT	20	17	13	-	20	17	13	-	20	17	13	-	20	18	13	-	20	17	13	-	19	16	12	-
		kW	2.37	2.42	2.49	-	2.55	2.60	2.69	-	2.71	2.77	2.86	-	2.85	2.91	3.01	-	2.97	3.03	3.13	-	3.07	3.14	3.24	-
		Amps	9.9	10.1	10.4	-	10.6	10.8	11.1	-	11.4	11.6	12.0	-	12.1	12.4	12.7	-	12.8	13.1	13.5	-	13.5	13.8	14.2	-
		Hi PR	247	265	280	-	277	298	315	-	315	339	358	-	359	386	407	-	403	434	458	-	446	480	507	-
		Lo PR	110	117	128	-	117	124	135	-	121	129	141	-	127	135	148	-	133	142	155	-	138	147	160	-
	1038	MBh	31.2	32.3	35.4	-	30.5	31.6	34.6	-	29.7	30.8	33.8	-	29.0	30.1	33.0	-	27.6	28.6	31.3	-	25.5	26.5	29.0	-
		S/T	0.73	0.61	0.42	-	0.76	0.63	0.44	-	0.77	0.65	0.45	-	0.80	0.67	0.46	-	0.83	0.69	0.48	-	0.84	0.70	0.48	-
		ΔT	20	17	13	-	20	18	13	-	20	18	13	-	21	18	14	-	20	18	13	-	19	16	12	-
		kW	2.31	2.36	2.43	-	2.49	2.54	2.62	-	2.64	2.70	2.79	-	2.78	2.84	2.93	-	2.90	2.96	3.06	-	3.00	3.06	3.16	-
		Amps	9.7	9.9	10.1	-	10.3	10.6	10.9	-	11.1	11.4	11.7	-	11.8	12.1	12.4	-	12.5	12.7	13.1	-	13.1	13.4	13.8	-
		Hi PR	239	258	272	-	269	289	305	-	305	329	347	-	348	374	395	-	391	421	445	-	432	465	491	-
		Lo PR	107	114	124	-	113	120	131	-	118	125	137	-	124	131	143	-	129	138	150	-	134	142	155	-
75	1329	MBh	35.4	36.4	39.5	42.3	34.6	35.6	38.5	41.4	33.8	34.8	37.6	40.4	32.9	**33.9**	36.7	39.4	31.3	32.2	34.9	37.4	29.0	29.8	32.3	34.7
		S/T	0.90	0.81	0.61	0.39	0.93	0.84	0.63	0.41	0.96	0.86	0.65	0.42	0.99	**0.88**	0.67	0.43	1.00	0.92	0.69	0.45	1.00	0.93	0.70	0.45
		ΔT	22	20	17	11	22	21	17	12	22	21	17	12	23	**21**	17	12	22	20	17	12	20	19	16	11
		kW	2.41	2.46	2.53	2.62	2.59	2.65	2.73	2.82	2.75	2.81	2.90	3.00	2.90	**2.96**	3.06	3.16	3.02	3.09	3.19	3.30	3.12	3.19	3.30	3.41
		Amps	10.1	10.3	10.6	10.9	10.8	11.0	11.3	11.7	11.6	11.8	12.2	12.6	12.3	**12.6**	12.9	13.4	13.0	13.3	13.7	14.2	13.7	14.0	14.4	14.9
		Hi PR	252	271	286	298	282	304	321	335	321	346	365	381	366	**394**	416	434	412	443	468	488	455	489	517	539
		Lo PR	113	120	131	139	119	127	138	147	124	132	144	153	130	**138**	151	161	136	145	158	168	141	150	164	174
	1184	MBh	34.4	35.4	38.3	41.1	33.6	34.6	37.4	40.2	32.8	33.7	36.5	39.2	32.0	**32.9**	35.6	38.2	30.4	31.3	33.8	36.3	28.1	29.0	31.4	33.7
		S/T	0.86	0.77	0.58	0.37	0.89	0.80	0.60	0.39	0.91	0.82	0.62	0.40	0.94	**0.84**	0.64	0.41	0.98	0.88	0.66	0.43	0.99	0.88	0.67	0.43
		ΔT	23	21	17	12	23	21	18	12	23	21	18	12	23	**22**	18	12	23	21	17	12	22	20	16	11
		kW	2.39	2.44	2.51	2.59	2.57	2.63	2.71	2.80	2.73	2.79	2.88	2.98	2.87	**2.94**	3.03	3.13	2.99	3.06	3.16	3.27	3.10	3.17	3.27	3.38
		Amps	10.0	10.2	10.5	10.8	10.7	10.9	11.2	11.6	11.5	11.7	12.1	12.5	12.2	**12.5**	12.8	13.3	12.9	13.2	13.6	14.1	13.6	13.9	14.3	14.8
		Hi PR	249	268	283	295	280	301	318	331	318	342	361	377	362	**390**	412	429	408	439	463	483	450	485	512	534
		Lo PR	112	119	130	138	118	125	137	146	122	130	142	151	129	**137**	149	159	135	143	157	167	139	148	162	172
	1038	MBh	31.7	32.7	35.4	37.9	31.0	31.9	34.5	37.1	30.2	31.1	33.7	36.2	29.5	**30.4**	32.9	35.3	28.0	28.9	31.2	33.5	26.0	26.7	28.9	31.1
		S/T	0.83	0.74	0.56	0.36	0.86	0.77	0.58	0.37	0.88	0.79	0.60	0.38	0.91	**0.81**	0.62	0.40	0.94	0.84	0.64	0.41	0.95	0.85	0.64	0.41
		ΔT	23	21	18	12	24	22	18	12	24	22	18	12	24	**22**	18	12	23	22	18	12	22	20	17	11
		kW	2.33	2.38	2.45	2.53	2.51	2.56	2.64	2.73	2.66	2.72	2.81	2.90	2.80	**2.86**	2.96	3.05	2.92	2.98	3.08	3.18	3.02	3.09	3.19	3.30
		Amps	9.7	9.9	10.2	10.6	10.4	10.6	11.0	11.3	11.2	11.5	11.8	12.2	11.9	**12.2**	12.5	12.9	12.6	12.9	13.2	13.7	13.2	13.5	14.0	14.4
		Hi PR	242	260	275	287	271	292	308	322	309	332	351	366	351	**378**	399	416	395	425	449	469	437	470	496	518
		Lo PR	108	115	126	134	114	122	133	141	119	126	138	147	125	**133**	145	154	131	139	152	162	135	144	157	167

IDB: Entering Indoor Dry Bulb Temperature

Shaded area reflects ACCA (TVA) conditions.

kW = Total system power

High and low pressures are measured at the liquid and suction access fittings.

Amps: Unit amps (comp.+ evaporator + condenser fan motors)

			Outdoor Ambient Temperature																							
			65ºF				75ºF				85ºF				95ºF				105ºF				115ºF			
			Entering Indoor Wet Bulb Temperature																							
IDB	Airflow		59	63	67	71	59	63	67	71	59	63	67	71	59	63	67	71	59	63	67	71	59	63	67	71
80	1329	MBh	36.0	36.8	39.3	42.0	35.2	36.0	38.4	41.1	34.4	35.1	37.5	40.1	33.5	34.2	36.6	39.1	31.8	32.5	34.8	37.2	29.5	30.1	32.2	34.4
		S/T	1.00	0.93	0.75	0.56	1.00	0.96	0.78	0.58	1.00	1.00	0.80	0.60	1.00	1.00	0.83	0.62	1.00	1.00	0.86	0.64	1.00	1.00	0.87	0.65
		ΔT	25	24	21	16	24	24	21	17	24	24	21	17	23	24	21	17	22	23	21	17	20	21	19	15
		kW	2.43	2.48	2.56	2.64	2.61	2.67	2.75	2.84	2.78	2.84	2.93	3.03	2.92	2.99	3.08	3.19	3.04	3.11	3.21	3.32	3.15	3.22	3.33	3.44
		Amps	10.1	10.3	10.6	11.0	10.9	11.1	11.4	11.8	11.7	11.9	12.3	12.7	12.4	12.7	13.1	13.5	13.1	13.4	13.8	14.3	13.8	14.1	14.6	15.1
		Hi PR	254	274	289	301	285	307	324	338	324	349	369	385	370	398	420	438	416	447	472	493	459	494	522	544
		Lo PR	114	121	132	141	120	128	140	149	125	133	145	155	131	140	152	162	138	146	160	170	142	151	165	176
	1184	MBh	35.0	35.7	38.2	40.8	34.2	34.9	37.3	39.9	33.4	34.1	36.4	38.9	32.5	33.2	**35.5**	38.0	30.9	31.6	33.7	36.1	28.6	29.3	31.3	33.4
		S/T	0.94	0.88	0.72	0.54	0.98	0.92	0.75	0.56	1.00	0.94	0.76	0.57	1.00	0.97	**0.79**	0.59	1.00	1.00	0.82	0.61	1.00	1.00	0.83	0.62
		ΔT	26	25	21	17	26	25	22	17	26	25	22	17	25	25	**22**	17	24	25	21	17	22	23	20	16
		kW	2.41	2.46	2.53	2.62	2.59	2.65	2.73	2.82	2.75	2.81	2.90	3.00	2.90	2.96	**3.06**	3.16	3.02	3.09	3.19	3.30	3.12	3.19	3.30	3.41
		Amps	10.1	10.3	10.6	10.9	10.8	11.0	11.3	11.7	11.6	11.8	12.2	12.6	12.3	12.6	**12.9**	13.4	13.0	13.3	13.7	14.2	13.7	14.0	14.4	14.9
		Hi PR	252	271	286	298	282	304	321	335	321	346	365	381	366	394	**416**	434	412	443	468	488	455	489	517	539
		Lo PR	113	120	131	139	119	127	138	147	124	132	144	153	130	138	**151**	161	136	145	158	168	141	150	164	174
	1038	MBh	32.3	33.0	35.2	37.7	31.5	32.2	34.4	36.8	30.8	31.5	33.6	35.9	30.0	30.7	32.8	35.0	28.5	29.2	31.1	33.3	26.4	27.0	28.9	30.8
		S/T	0.91	0.85	0.69	0.52	0.94	0.88	0.72	0.54	0.97	0.91	0.74	0.55	1.00	0.94	0.76	0.57	1.03	0.97	0.79	0.59	1.04	0.98	0.80	0.60
		ΔT	26	25	22	17	26	25	22	18	26	25	22	18	27	25	22	18	26	25	22	17	24	23	20	16
		kW	2.35	2.40	2.47	2.55	2.53	2.58	2.66	2.75	2.69	2.74	2.83	2.93	2.83	2.89	2.98	3.08	2.94	3.01	3.11	3.21	3.05	3.11	3.22	3.32
		Amps	9.8	10.0	10.3	10.6	10.5	10.7	11.0	11.4	11.3	11.5	11.9	12.3	12.0	12.3	12.6	13.1	12.7	13.0	13.4	13.8	13.4	13.7	14.1	14.6
		Hi PR	244	263	277	289	274	295	311	325	312	335	354	369	355	382	403	421	399	430	454	473	441	475	501	523
		Lo PR	109	116	127	135	115	123	134	143	120	128	139	148	126	134	146	156	132	141	153	163	137	145	159	169
85	1329	MBh	36.7	37.4	39.1	41.8	35.8	36.5	38.2	40.8	35.0	35.6	37.3	39.8	34.1	34.8	36.4	38.8	32.4	33.0	34.6	36.9	30.0	30.6	32.0	34.2
		S/T	1.00	1.00	0.90	0.73	1.00	1.00	0.94	0.76	1.00	1.00	0.96	0.78	1.00	1.00	0.99	0.80	1.00	1.00	1.00	0.83	1.00	1.00	1.00	0.84
		ΔT	25	26	24	21	25	25	25	21	24	25	25	21	24	24	25	22	22	23	24	21	21	21	22	20
		kW	2.45	2.50	2.58	2.66	2.63	2.69	2.78	2.87	2.80	2.86	2.95	3.05	2.95	3.01	3.11	3.21	3.07	3.14	3.24	3.35	3.18	3.25	3.36	3.47
		Amps	10.2	10.4	10.7	11.1	10.9	11.2	11.5	11.9	11.8	12.0	12.4	12.8	12.5	12.8	13.2	13.6	13.2	13.5	13.9	14.4	13.9	14.3	14.7	15.2
		Hi PR	257	276	292	304	288	310	327	342	328	353	372	388	373	402	424	442	420	452	477	498	464	499	527	550
		Lo PR	115	122	133	142	121	129	141	150	126	134	147	156	133	141	154	164	139	148	161	172	144	153	167	178
	1184	MBh	35.6	36.3	38.0	40.5	34.8	35.4	37.1	39.6	33.9	34.6	36.2	38.7	33.1	33.7	35.3	37.7	31.5	32.1	33.6	35.8	29.1	29.7	31.1	33.2
		S/T	0.99	0.95	0.86	0.70	1.00	0.99	0.89	0.72	1.00	1.00	0.91	0.74	1.00	1.00	0.94	0.77	1.00	1.00	0.98	0.79	1.00	1.00	0.99	0.80
		ΔT	27	27	25	22	27	27	26	22	26	27	26	22	26	26	26	22	24	25	26	22	23	23	24	21
		kW	2.43	2.48	2.56	2.64	2.61	2.67	2.75	2.84	2.78	2.84	2.93	3.03	2.92	2.99	3.08	3.19	3.04	3.11	3.21	3.32	3.15	3.22	3.33	3.44
		Amps	10.1	10.3	10.6	11.0	10.9	11.1	11.4	11.8	11.7	11.9	12.3	12.7	12.4	12.7	13.1	13.5	13.1	13.4	13.8	14.3	13.8	14.1	14.6	15.1
		Hi PR	254	274	289	301	285	307	324	338	324	349	369	385	370	398	420	438	416	447	472	493	459	494	522	544
		Lo PR	114	121	132	141	120	128	140	149	125	133	145	155	131	140	152	162	138	146	160	170	142	151	165	176
	1038	MBh	32.8	33.5	35.1	37.4	32.1	32.7	34.3	36.5	31.3	31.9	33.4	35.7	30.6	31.1	32.6	34.8	29.0	29.6	31.0	33.1	26.9	27.4	28.7	30.6
		S/T	0.95	0.92	0.83	0.67	0.99	0.95	0.86	0.70	1.00	0.98	0.88	0.72	1.00	1.00	0.91	0.74	1.00	1.00	0.94	0.77	1.00	1.00	0.95	0.77
		ΔT	28	27	26	22	28	28	26	23	28	28	26	23	27	28	26	23	26	26	26	22	24	24	24	21
		kW	2.37	2.42	2.49	2.57	2.55	2.60	2.69	2.77	2.71	2.77	2.86	2.95	2.85	2.91	3.01	3.11	2.97	3.03	3.13	3.24	3.07	3.14	3.24	3.35
		Amps	9.9	10.1	10.4	10.7	10.6	10.8	11.1	11.5	11.4	11.6	12.0	12.4	12.1	12.4	12.7	13.2	12.8	13.1	13.5	13.9	13.5	13.8	14.2	14.7
		Hi PR	247	265	280	292	277	298	314	328	315	339	358	373	358	386	407	425	403	434	458	478	446	480	506	528
		Lo PR	110	117	128	137	117	124	135	144	121	129	141	150	127	135	148	157	133	142	155	165	138	147	160	171

IDB: Entering Indoor Dry Bulb Temperature

Shaded area reflects AHRI (TVA) conditions.

kW = Total system power

High and low pressures are measured at the liquid and suction access fittings.

Amps: Unit amps (comp.+ evaporator + condenser fan motors)

			Outdoor Ambient Temperature																							
			65ºF				75ºF				85ºF				95ºF				105ºF				115ºF			
			Entering Indoor Wet Bulb Temperature																							
IDB	Airflow		59	63	67	71	59	63	67	71	59	63	67	71	59	63	67	71	59	63	67	71	59	63	67	71
70	1443	MBh	40.0	41.4	45.4	-	39.0	40.5	44.3	-	38.1	39.5	43.3	-	37.2	38.5	42.2	-	35.3	36.6	40.1	-	32.7	33.9	37.2	-
		S/T	0.75	0.63	0.44	-	0.78	0.65	0.45	-	0.80	0.67	0.46	-	0.83	0.69	0.48	-	0.86	0.72	0.50	-	0.86	0.72	0.50	-
		ΔT	19	17	13	-	19	17	13	-	19	17	13	-	20	17	13	-	19	17	13	-	18	16	12	-
		kW	2.68	2.73	2.82	-	2.88	2.94	3.03	-	3.05	3.12	3.21	-	3.21	3.27	3.38	-	3.34	3.41	3.52	-	3.45	3.53	3.64	-
		Amps	12.9	13.1	13.4	-	13.7	13.9	14.3	-	14.6	14.9	15.2	-	15.4	15.7	16.1	-	16.1	16.5	16.9	-	16.9	17.3	17.7	-
		Hi PR	236	254	269	-	265	285	301	-	302	325	343	-	343	370	390	-	386	416	439	-	427	459	485	-
		Lo PR	107	113	124	-	113	120	131	-	117	124	136	-	123	131	143	-	129	137	150	-	133	142	155	-
	1286	MBh	38.8	40.2	44.1	-	37.9	39.3	43.0	-	37.0	38.3	42.0	-	36.1	37.4	41.0	-	34.3	35.5	38.9	-	31.8	32.9	36.1	-
		S/T	0.72	0.60	0.42	-	0.74	0.62	0.43	-	0.76	0.64	0.44	-	0.79	0.66	0.46	-	0.82	0.68	0.47	-	0.82	0.69	0.48	-
		ΔT	20	17	13	-	20	17	13	-	20	17	13	-	20	18	13	-	20	17	13	-	19	16	12	-
		kW	2.66	2.71	2.79	-	2.85	2.91	3.00	-	3.03	3.09	3.19	-	3.18	3.25	3.35	-	3.31	3.38	3.49	-	3.42	3.50	3.61	-
		Amps	12.8	13.0	13.4	-	13.6	13.8	14.2	-	14.5	14.7	15.1	-	15.3	15.5	16.0	-	16.0	16.3	16.8	-	16.8	17.1	17.6	-
		Hi PR	234	252	266	-	263	283	298	-	299	321	339	-	340	366	386	-	383	412	435	-	423	455	480	-
		Lo PR	105	112	123	-	111	119	129	-	116	123	135	-	122	129	141	-	128	136	148	-	132	140	153	-
	1128	MBh	35.8	37.1	40.7	-	35.0	36.3	39.7	-	34.1	35.4	38.8	-	33.3	34.5	37.8	-	31.6	32.8	35.9	-	29.3	30.4	33.3	-
		S/T	0.69	0.58	0.40	-	0.72	0.60	0.41	-	0.74	0.61	0.43	-	0.76	0.63	0.44	-	0.79	0.66	0.46	-	0.79	0.66	0.46	-
		ΔT	20	17	13	-	20	18	13	-	20	18	13	-	21	18	14	-	20	18	13	-	19	16	12	-
		kW	2.60	2.65	2.73	-	2.79	2.84	2.93	-	2.96	3.02	3.11	-	3.10	3.17	3.27	-	3.23	3.30	3.40	-	3.34	3.41	3.52	-
		Amps	12.5	12.8	13.1	-	13.3	13.5	13.9	-	14.2	14.4	14.8	-	14.9	15.2	15.6	-	15.7	16.0	16.4	-	16.4	16.7	17.2	-
		Hi PR	227	244	258	-	255	274	289	-	290	312	329	-	330	355	375	-	371	399	422	-	410	441	466	-
		Lo PR	102	109	119	-	108	115	126	-	112	120	130	-	118	126	137	-	124	132	144	-	128	136	149	-
75	1443	MBh	40.6	41.8	45.3	48.6	39.7	40.9	44.2	47.5	38.8	39.9	43.2	46.3	37.8	**38.9**	42.1	45.2	35.9	37.0	40.0	43.0	33.3	34.3	37.1	39.8
		S/T	0.86	0.76	0.58	0.37	0.89	0.79	0.60	0.39	0.91	0.81	0.62	0.40	0.94	**0.84**	0.64	0.41	0.97	0.87	0.66	0.42	0.98	0.88	0.66	0.43
		ΔT	22	20	17	12	22	21	17	12	22	21	17	12	23	**21**	17	12	22	21	17	12	21	19	16	11
		kW	2.70	2.75	2.84	2.93	2.90	2.96	3.05	3.15	3.08	3.14	3.24	3.34	3.23	**3.30**	3.41	3.52	3.36	3.44	3.55	3.67	3.48	3.56	3.67	3.79
		Amps	13.0	13.2	13.5	13.9	13.8	14.0	14.4	14.8	14.7	15.0	15.4	15.8	15.5	**15.8**	16.2	16.7	16.3	16.6	17.0	17.6	17.0	17.4	17.9	18.4
		Hi PR	239	257	271	283	268	288	304	317	305	328	346	361	347	**373**	394	411	390	420	444	463	431	464	490	511
		Lo PR	108	115	125	133	114	121	132	141	118	126	137	146	124	**132**	144	154	130	138	151	161	135	143	156	166
	1286	MBh	39.5	40.6	44.0	47.2	38.5	39.7	43.0	46.1	37.6	38.7	41.9	45.0	36.7	**37.8**	40.9	43.9	34.9	35.9	38.9	41.7	32.3	33.3	36.0	38.6
		S/T	0.82	0.73	0.55	0.36	0.85	0.76	0.57	0.37	0.87	0.78	0.59	0.38	0.89	**0.80**	0.61	0.39	0.93	0.83	0.63	0.40	0.94	0.84	0.63	0.41
		ΔT	23	21	17	12	23	21	18	12	23	21	18	12	23	**22**	18	12	23	21	17	12	22	20	16	11
		kW	2.68	2.73	2.82	2.90	2.88	2.94	3.03	3.12	3.05	3.12	3.21	3.32	3.21	**3.28**	3.38	3.49	3.34	3.41	3.52	3.64	3.45	3.53	3.64	3.76
		Amps	12.9	13.1	13.4	13.8	13.7	13.9	14.3	14.7	14.6	14.9	15.2	15.7	15.4	**15.7**	16.1	16.6	16.1	16.5	16.9	17.4	16.9	17.3	17.7	18.3
		Hi PR	236	254	269	280	265	285	301	314	302	325	343	358	344	**370**	390	407	387	416	439	458	427	460	485	506
		Lo PR	107	113	124	132	113	120	131	139	117	124	136	145	123	**131**	143	152	129	137	150	159	133	142	155	165
	1128	MBh	36.4	37.5	40.6	43.6	35.6	36.6	39.6	42.5	34.7	35.8	38.7	41.5	33.9	**34.9**	37.8	40.5	32.2	33.1	35.9	38.5	29.8	30.7	33.2	35.7
		S/T	0.79	0.70	0.53	0.34	0.82	0.73	0.55	0.35	0.84	0.75	0.57	0.36	0.86	**0.77**	0.58	0.38	0.90	0.80	0.61	0.39	0.90	0.81	0.61	0.39
		ΔT	23	22	18	12	24	22	18	12	24	22	18	12	24	**22**	18	12	23	22	18	12	22	20	17	11
		kW	2.62	2.67	2.75	2.84	2.81	2.87	2.96	3.05	2.98	3.04	3.14	3.24	3.13	**3.20**	3.30	3.40	3.26	3.33	3.43	3.55	3.37	3.44	3.55	3.67
		Amps	12.6	12.9	13.2	13.5	13.4	13.6	14.0	14.4	14.3	14.5	14.9	15.4	15.0	**15.3**	15.7	16.2	15.8	16.1	16.5	17.0	16.5	16.9	17.3	17.9
		Hi PR	229	247	261	272	257	277	292	305	293	315	332	347	333	**359**	379	395	375	403	426	444	414	446	471	491
		Lo PR	103	110	120	128	109	116	127	135	114	121	132	140	119	**127**	138	147	125	133	145	155	129	137	150	160

IDB: Entering Indoor Dry Bulb Temperature

Shaded area reflects ACCA (TVA) conditions.

kW = Total system power

High and low pressures are measured at the liquid and suction access fittings.

Amps: Unit amps (comp.+ evaporator + condenser fan motors)

Expanded Cooling Data — GPG1442***M41 (cont.)

			Outdoor Ambient Temperature																							
			65ºF				75ºF				85ºF				95ºF				105ºF				115ºF			
			Entering Indoor Wet Bulb Temperature																							
IDB	Airflow		59	63	67	71	59	63	67	71	59	63	67	71	59	63	67	71	59	63	67	71	59	63	67	71
80	1443	MBh	41.4	42.3	45.2	48.3	40.4	41.3	44.1	47.1	39.4	40.3	43.1	46.0	38.5	39.3	42.0	44.9	36.6	37.4	39.9	42.7	33.9	34.6	37.0	39.5
		S/T	0.94	0.88	0.72	0.54	1.00	0.91	0.74	0.55	1.00	0.93	0.76	0.57	1.00	0.97	0.79	0.59	1.00	1.00	0.82	0.61	1.00	1.00	0.82	0.61
		ΔT	25	24	21	16	26	24	21	17	25	24	21	17	25	24	21	17	23	24	21	17	22	22	19	15
		kW	2.72	2.78	2.86	2.95	2.92	2.98	3.08	3.17	3.10	3.17	3.27	3.37	3.26	3.33	3.44	3.55	3.39	3.47	3.58	3.70	3.51	3.59	3.70	3.82
		Amps	13.1	13.3	13.6	14.0	13.9	14.1	14.5	14.9	14.8	15.1	15.5	15.9	15.6	15.9	16.3	16.8	16.4	16.7	17.2	17.7	17.2	17.5	18.0	18.6
		Hi PR	241	260	274	286	271	291	307	321	308	331	350	365	350	377	398	415	394	424	448	467	436	469	495	516
		Lo PR	109	116	126	134	115	122	133	142	119	127	139	148	125	133	146	155	131	140	153	163	136	145	158	168
	1286	MBh	40.2	41.0	43.8	46.9	39.2	40.1	42.8	45.8	38.3	39.1	41.8	44.7	37.4	38.2	**40.8**	43.6	35.5	36.3	38.7	41.4	32.9	33.6	35.9	38.4
		S/T	0.89	0.84	0.68	0.51	0.93	0.87	0.71	0.53	0.95	0.89	0.73	0.54	0.98	0.92	**0.75**	0.56	1.00	0.96	0.78	0.58	1.00	0.96	0.78	0.59
		ΔT	26	25	21	17	26	25	22	17	26	25	22	17	26	25	**22**	17	25	25	22	17	24	23	20	16
		kW	2.70	2.75	2.84	2.93	2.90	2.96	3.05	3.15	3.08	3.14	3.24	3.35	3.23	3.30	**3.41**	3.52	3.37	3.44	3.55	3.67	3.48	3.56	3.67	3.79
		Amps	13.0	13.2	13.5	13.9	13.8	14.0	14.4	14.8	14.7	15.0	15.4	15.8	15.5	15.8	**16.2**	16.7	16.3	16.6	17.0	17.6	17.1	17.4	17.9	18.4
		Hi PR	239	257	271	283	268	288	304	318	305	328	346	361	347	373	**394**	411	390	420	444	463	431	464	490	511
		Lo PR	108	115	125	133	114	121	132	141	118	126	137	146	124	132	**144**	154	130	138	151	161	135	143	156	166
	1128	MBh	37.1	37.9	40.5	43.3	36.2	37.0	39.5	42.3	35.3	36.1	38.6	41.2	34.5	35.2	37.6	40.2	32.8	33.5	35.8	38.2	30.3	31.0	33.1	35.4
		S/T	0.86	0.81	0.66	0.49	0.89	0.84	0.68	0.51	0.92	0.86	0.70	0.52	0.95	0.89	0.72	0.54	0.98	0.92	0.75	0.56	0.99	0.93	0.76	0.57
		ΔT	26	25	22	17	26	25	22	18	26	25	22	18	27	25	22	18	26	25	22	17	24	23	20	16
		kW	2.64	2.69	2.77	2.86	2.83	2.89	2.98	3.07	3.00	3.07	3.16	3.26	3.15	3.22	3.32	3.43	3.28	3.35	3.46	3.57	3.39	3.47	3.58	3.70
		Amps	12.7	12.9	13.3	13.6	13.5	13.7	14.1	14.5	14.4	14.6	15.0	15.5	15.1	15.4	15.8	16.3	15.9	16.2	16.7	17.2	16.7	17.0	17.5	18.0
		Hi PR	232	249	263	274	260	280	295	308	296	318	336	350	337	362	383	399	379	408	430	449	418	450	475	496
		Lo PR	104	111	121	129	110	117	128	136	115	122	133	142	120	128	140	149	126	134	147	156	131	139	152	161
85	1443	MBh	42.1	42.9	44.9	47.9	41.1	41.9	43.9	46.8	40.1	40.9	42.8	45.7	39.1	39.9	41.8	44.6	37.2	37.9	39.7	42.4	34.5	35.1	36.8	39.2
		S/T	0.98	0.95	0.86	0.69	1.00	0.98	0.89	0.72	1.00	1.00	0.91	0.74	1.00	1.00	0.94	0.76	1.00	1.00	0.97	0.79	1.00	1.00	0.98	0.80
		ΔT	26	26	25	21	26	26	25	21	26	26	25	21	25	25	25	22	24	24	25	21	22	22	23	20
		kW	2.74	2.80	2.88	2.97	2.94	3.01	3.10	3.20	3.13	3.19	3.29	3.40	3.28	3.36	3.46	3.58	3.42	3.49	3.61	3.73	3.54	3.61	3.73	3.86
		Amps	13.2	13.4	13.7	14.1	14.0	14.2	14.6	15.0	14.9	15.2	15.6	16.1	15.7	16.0	16.4	16.9	16.5	16.8	17.3	17.8	17.3	17.7	18.1	18.7
		Hi PR	244	262	277	289	273	294	311	324	311	334	353	368	354	381	402	420	398	429	453	472	440	474	500	522
		Lo PR	110	117	128	136	116	123	135	144	121	128	140	149	127	135	147	157	133	141	154	164	137	146	159	170
	1286	MBh	40.9	41.7	43.6	46.5	39.9	40.7	42.6	45.5	39.0	39.7	41.6	44.4	38.0	38.7	40.6	43.3	36.1	36.8	38.5	41.1	33.4	34.1	35.7	38.1
		S/T	0.94	0.90	0.82	0.66	0.97	0.94	0.85	0.69	1.00	0.96	0.87	0.70	1.00	0.99	0.90	0.73	1.00	1.00	0.93	0.75	1.00	1.00	0.94	0.76
		ΔT	27	27	25	22	28	27	26	22	28	27	26	22	27	28	26	23	26	26	26	22	24	24	24	21
		kW	2.72	2.78	2.86	2.95	2.92	2.98	3.08	3.17	3.10	3.17	3.27	3.37	3.26	3.33	3.44	3.55	3.39	3.47	3.58	3.70	3.51	3.59	3.70	3.82
		Amps	13.1	13.3	13.6	14.0	13.9	14.1	14.5	14.9	14.8	15.1	15.5	15.9	15.6	15.9	16.3	16.8	16.4	16.7	17.2	17.7	17.2	17.5	18.0	18.6
		Hi PR	241	260	274	286	271	291	307	321	308	331	350	365	350	377	398	415	394	424	448	467	436	469	495	516
		Lo PR	109	116	126	134	115	122	133	142	119	127	139	148	125	133	146	155	131	140	153	163	136	145	158	168
	1128	MBh	37.7	38.4	40.3	43.0	36.8	37.5	39.3	42.0	36.0	36.7	38.4	41.0	35.1	35.8	37.5	40.0	33.3	34.0	35.6	38.0	30.9	31.5	33.0	35.2
		S/T	0.90	0.87	0.79	0.64	0.94	0.90	0.82	0.66	0.96	0.93	0.84	0.68	0.99	0.96	0.86	0.70	1.00	0.99	0.90	0.73	1.00	1.00	0.90	0.73
		ΔT	28	27	26	22	28	28	26	23	28	28	26	23	28	28	26	23	27	28	26	23	25	26	24	21
		kW	2.66	2.71	2.79	2.88	2.85	2.91	3.00	3.10	3.03	3.09	3.19	3.29	3.18	3.25	3.35	3.46	3.31	3.38	3.49	3.60	3.42	3.50	3.61	3.73
		Amps	12.8	13.0	13.3	13.7	13.6	13.8	14.2	14.6	14.5	14.7	15.1	15.6	15.2	15.5	16.0	16.4	16.0	16.3	16.8	17.3	16.8	17.1	17.6	18.1
		Hi PR	234	252	266	277	262	282	298	311	299	321	339	354	340	366	386	403	382	412	435	453	423	455	480	501
		Lo PR	105	112	122	130	111	119	129	138	116	123	134	143	122	129	141	150	127	136	148	158	132	140	153	163

IDB: Entering Indoor Dry Bulb Temperature

Shaded area reflects AHRI (TVA) conditions.

kW = Total system power

High and low pressures are measured at the liquid and suction access fittings.

Amps: Unit amps (comp.+ evaporator + condenser fan motors)

			Outdoor Ambient Temperature																							
			65ºF				75ºF				85ºF				95ºF				105ºF				115ºF			
			Entering Indoor Wet Bulb Temperature																							
IDB	Airflow		59	63	67	71	59	63	67	71	59	63	67	71	59	63	67	71	59	63	67	71	59	63	67	71
70	1717	MBh	45.9	47.5	52.1	-	44.8	46.4	50.9	-	43.7	45.3	49.7	-	42.7	44.2	48.5	-	40.5	42.0	46.0	-	37.6	38.9	42.6	-
		S/T	0.80	0.67	0.46	-	0.83	0.69	0.48	-	0.85	0.71	0.49	-	0.88	0.73	0.51	-	0.91	0.76	0.53	-	0.92	0.77	0.53	-
		ΔT	20	17	13	-	20	17	13	-	20	17	13	-	20	17	13	-	20	17	13	-	18	16	12	-
		kW	3.18	3.25	3.35	-	3.42	3.49	3.60	-	3.63	3.70	3.82	-	3.81	3.89	4.01	-	3.96	4.05	4.18	-	4.10	4.19	4.32	-
		Amps	15.3	15.5	15.9	-	16.2	16.5	16.9	-	17.3	17.6	18.0	-	18.2	18.5	19.0	-	19.1	19.5	20.0	-	20.0	20.4	21.0	-
		Hi PR	254	273	288	-	285	306	324	-	324	348	368	-	369	397	419	-	415	446	471	-	458	493	521	-
		Lo PR	112	119	130	-	118	126	137	-	123	131	142	-	129	137	150	-	135	144	157	-	140	149	162	-
	1529	MBh	44.5	46.2	50.6	-	43.5	45.1	49.4	-	42.5	44.0	48.2	-	41.4	42.9	47.1	-	39.4	40.8	44.7	-	36.5	37.8	41.4	-
		S/T	0.76	0.64	0.44	-	0.79	0.66	0.46	-	0.81	0.68	0.47	-	0.83	0.70	0.48	-	0.87	0.72	0.50	-	0.87	0.73	0.51	-
		ΔT	20	18	13	-	21	18	14	-	21	18	14	-	21	18	14	-	21	18	13	-	19	17	13	-
		kW	3.16	3.22	3.32	-	3.39	3.46	3.57	-	3.60	3.67	3.79	-	3.78	3.86	3.98	-	3.93	4.02	4.15	-	4.07	4.15	4.29	-
		Amps	15.2	15.4	15.8	-	16.1	16.4	16.8	-	17.1	17.5	17.9	-	18.0	18.4	18.9	-	19.0	19.3	19.8	-	19.9	20.2	20.8	-
		Hi PR	251	270	285	-	282	303	320	-	321	345	364	-	365	393	415	-	411	442	467	-	454	488	516	-
		Lo PR	111	118	128	-	117	124	136	-	121	129	141	-	128	136	148	-	134	142	155	-	138	147	161	-
	1341	MBh	41.1	42.6	46.7	-	40.2	41.6	45.6	-	39.2	40.6	44.5	-	38.2	39.6	43.4	-	36.3	37.7	41.3	-	33.7	34.9	38.2	-
		S/T	0.73	0.61	0.42	-	0.76	0.64	0.44	-	0.78	0.65	0.45	-	0.80	0.67	0.47	-	0.84	0.70	0.48	-	0.84	0.70	0.49	-
		ΔT	21	18	14	-	21	18	14	-	21	18	14	-	21	18	14	-	21	18	14	-	19	17	13	-
		kW	3.09	3.15	3.25	-	3.31	3.38	3.49	-	3.51	3.59	3.70	-	3.69	3.77	3.89	-	3.84	3.92	4.04	-	3.97	4.05	4.18	-
		Amps	14.9	15.1	15.5	-	15.7	16.0	16.4	-	16.8	17.1	17.5	-	17.7	18.0	18.5	-	18.5	18.9	19.4	-	19.4	19.8	20.3	-
		Hi PR	244	262	277	-	273	294	311	-	311	335	353	-	354	381	402	-	398	429	453	-	440	474	500	-
		Lo PR	107	114	125	-	113	121	132	-	118	125	137	-	124	132	144	-	130	138	151	-	134	143	156	-
75	1717	MBh	46.7	48.0	52.0	55.8	45.6	46.9	50.8	54.5	44.5	45.8	49.6	53.2	43.4	**44.7**	48.4	51.9	41.2	42.4	45.9	49.3	38.2	39.3	42.6	45.7
		S/T	0.91	0.81	0.61	0.40	0.94	0.84	0.64	0.41	0.96	0.86	0.65	0.42	0.99	**0.89**	0.67	0.43	1.00	0.92	0.70	0.45	1.00	0.93	0.70	0.45
		ΔT	23	21	17	12	23	21	17	12	23	21	17	12	23	**21**	17	12	22	21	17	12	20	20	16	11
		kW	3.21	3.27	3.37	3.48	3.45	3.52	3.63	3.74	3.66	3.73	3.85	3.97	3.84	**3.92**	4.05	4.18	4.00	4.08	4.21	4.35	4.13	4.22	4.36	4.50
		Amps	15.4	15.6	16.0	16.5	16.3	16.6	17.0	17.5	17.4	17.7	18.2	18.7	18.3	**18.7**	19.2	19.7	19.2	19.6	20.1	20.8	20.2	20.6	21.1	21.8
		Hi PR	256	276	291	304	288	310	327	341	327	352	372	388	373	**401**	423	442	419	451	476	497	463	498	526	549
		Lo PR	113	120	131	140	119	127	138	147	124	132	144	153	130	**138**	151	161	136	145	158	169	141	150	164	175
	1529	MBh	45.3	46.6	50.5	54.2	44.2	45.6	49.3	52.9	43.2	44.5	48.1	51.7	42.1	**43.4**	47.0	50.4	40.0	41.2	44.6	47.9	37.1	38.2	41.3	44.3
		S/T	0.87	0.77	0.59	0.38	0.90	0.80	0.61	0.39	0.92	0.82	0.62	0.40	0.95	**0.85**	0.64	0.41	0.98	0.88	0.67	0.43	0.99	0.89	0.67	0.43
		ΔT	24	22	18	12	24	22	18	12	24	22	18	12	24	**22**	18	13	24	22	18	12	22	20	17	12
		kW	3.19	3.25	3.35	3.45	3.42	3.49	3.60	3.71	3.63	3.70	3.82	3.94	3.81	**3.89**	4.01	4.14	3.97	4.05	4.18	4.32	4.10	4.19	4.32	4.47
		Amps	15.3	15.5	15.9	16.4	16.2	16.5	16.9	17.4	17.3	17.6	18.0	18.6	18.2	**18.5**	19.0	19.6	19.1	19.5	20.0	20.6	20.0	20.4	21.0	21.6
		Hi PR	254	273	288	301	285	306	324	338	324	349	368	384	369	**397**	419	437	415	447	472	492	459	493	521	543
		Lo PR	112	119	130	138	118	126	137	146	123	131	143	152	129	**137**	150	159	135	144	157	167	140	149	162	173
	1341	MBh	41.8	43.0	46.6	50.0	40.8	42.0	45.5	48.8	39.9	41.0	44.4	47.7	38.9	**40.0**	43.3	46.5	36.9	38.0	41.2	44.2	34.2	35.2	38.1	40.9
		S/T	0.83	0.75	0.56	0.36	0.86	0.77	0.59	0.38	0.89	0.79	0.60	0.39	0.91	**0.82**	0.62	0.40	0.95	0.85	0.64	0.41	0.96	0.86	0.65	0.42
		ΔT	24	22	18	12	24	22	18	13	24	22	18	13	24	**22**	18	13	24	22	18	13	22	21	17	12
		kW	3.11	3.18	3.27	3.37	3.34	3.41	3.51	3.62	3.54	3.62	3.73	3.85	3.72	**3.80**	3.92	4.04	3.87	3.95	4.08	4.21	4.00	4.09	4.22	4.35
		Amps	15.0	15.2	15.6	16.0	15.9	16.1	16.5	17.0	16.9	17.2	17.6	18.2	17.8	**18.1**	18.6	19.2	18.7	19.0	19.5	20.1	19.6	19.9	20.5	21.1
		Hi PR	246	265	280	292	276	297	314	327	314	338	357	372	358	**385**	407	424	403	433	457	477	445	479	505	527
		Lo PR	108	115	126	134	115	122	133	142	119	127	138	147	125	**133**	145	155	131	139	152	162	136	144	157	168

IDB: Entering Indoor Dry Bulb Temperature

Shaded area reflects ACCA (TVA) conditions.

kW = Total system power

High and low pressures are measured at the liquid and suction access fittings.

Amps: Unit amps (comp.+ evaporator + condenser fan motors)

			Outdoor Ambient Temperature																							
			65ºF				75ºF				85ºF				95ºF				105ºF				115ºF			
			Entering Indoor Wet Bulb Temperature																							
IDB	Airflow		59	63	67	71	59	63	67	71	59	63	67	71	59	63	67	71	59	63	67	71	59	63	67	71
80	1717	MBh	47.5	48.5	51.8	55.4	46.4	47.4	50.6	54.1	45.3	46.3	49.4	52.8	44.2	45.1	48.2	51.5	42.0	42.9	45.8	49.0	38.9	39.7	42.4	45.4
		S/T	1.00	0.93	0.76	0.57	1.00	0.97	0.79	0.59	1.00	1.00	0.81	0.60	1.00	1.00	0.83	0.62	1.00	1.00	0.86	0.65	1.00	1.00	0.87	0.65
		ΔT	25	24	21	17	25	25	21	17	24	25	21	17	24	24	22	17	22	23	21	17	21	21	20	16
		kW	3.23	3.30	3.40	3.51	3.47	3.55	3.66	3.77	3.68	3.76	3.88	4.01	3.87	3.95	4.08	4.21	4.03	4.12	4.25	4.39	4.17	4.26	4.40	4.54
		Amps	15.5	15.8	16.1	16.6	16.4	16.7	17.1	17.6	17.5	17.8	18.3	18.8	18.4	18.8	19.3	19.9	19.4	19.8	20.3	20.9	20.3	20.7	21.3	21.9
		Hi PR	259	279	294	307	291	313	330	344	330	356	375	392	376	405	428	446	423	456	481	502	468	503	532	554
		Lo PR	114	121	132	141	120	128	140	149	125	133	145	155	131	140	153	163	138	147	160	170	143	152	166	176
	1529	MBh	46.1	47.1	50.3	53.8	45.0	46.0	49.2	52.5	44.0	44.9	48.0	51.3	42.9	43.8	**46.8**	50.0	40.7	41.6	44.5	47.5	37.7	38.6	41.2	44.0
		S/T	0.95	0.89	0.72	0.54	0.98	0.92	0.75	0.56	1.00	0.95	0.77	0.58	1.00	0.98	**0.79**	0.59	1.00	1.00	0.82	0.62	1.00	1.00	0.83	0.62
		ΔT	26	25	22	18	27	26	22	18	26	26	22	18	26	26	**22**	18	24	25	22	18	23	23	21	16
		kW	3.21	3.28	3.37	3.48	3.45	3.52	3.63	3.74	3.66	3.73	3.85	3.97	3.84	3.92	**4.05**	4.18	4.00	4.08	4.21	4.35	4.13	4.22	4.36	4.50
		Amps	15.4	15.6	16.0	16.5	16.3	16.6	17.0	17.5	17.4	17.7	18.2	18.7	18.3	18.7	**19.2**	19.7	19.2	19.6	20.1	20.8	20.2	20.6	21.1	21.8
		Hi PR	256	276	291	304	288	310	327	341	327	352	372	388	373	401	**423**	442	419	451	476	497	463	498	526	549
		Lo PR	113	120	131	140	119	127	138	148	124	132	144	153	130	138	**151**	161	136	145	158	169	141	150	164	175
	1341	MBh	42.6	43.5	46.5	49.7	41.6	42.5	45.4	48.5	40.6	41.5	44.3	47.3	39.6	40.4	43.2	46.2	37.6	38.4	41.1	43.9	34.8	35.6	38.0	40.6
		S/T	0.91	0.86	0.70	0.52	0.95	0.89	0.72	0.54	0.97	0.91	0.74	0.55	1.00	0.94	0.77	0.57	1.04	0.98	0.80	0.59	1.05	0.98	0.80	0.60
		ΔT	27	26	22	18	27	26	23	18	27	26	23	18	27	26	23	18	27	26	22	18	25	24	21	17
		kW	3.14	3.20	3.30	3.40	3.37	3.44	3.54	3.65	3.57	3.64	3.76	3.88	3.75	3.83	3.95	4.08	3.90	3.98	4.11	4.25	4.03	4.12	4.25	4.39
		Amps	15.1	15.3	15.7	16.1	16.0	16.3	16.7	17.1	17.0	17.3	17.8	18.3	17.9	18.3	18.7	19.3	18.8	19.2	19.7	20.3	19.7	20.1	20.6	21.3
		Hi PR	249	268	283	295	279	300	317	331	317	341	361	376	361	389	411	428	407	438	462	482	449	483	510	532
		Lo PR	109	116	127	135	116	123	134	143	120	128	140	149	126	134	147	156	132	141	154	164	137	146	159	169
85	1717	MBh	48.3	49.2	51.6	55.0	47.2	48.1	50.4	53.7	46.1	47.0	49.2	52.5	44.9	45.8	48.0	51.2	42.7	43.5	45.6	48.6	39.5	40.3	42.2	45.0
		S/T	1.00	1.00	0.91	0.74	1.00	1.00	0.94	0.76	1.00	1.00	0.97	0.78	1.00	1.00	1.00	0.81	1.00	1.00	1.00	0.84	1.00	1.00	1.00	0.85
		ΔT	26	26	25	22	25	26	25	22	25	25	25	22	24	25	26	22	23	23	24	22	21	22	23	20
		kW	3.26	3.33	3.43	3.53	3.50	3.57	3.68	3.80	3.71	3.79	3.91	4.04	3.90	3.99	4.11	4.25	4.06	4.15	4.28	4.43	4.20	4.29	4.43	4.58
		Amps	15.6	15.9	16.3	16.7	16.5	16.8	17.3	17.8	17.6	18.0	18.4	19.0	18.6	18.9	19.4	20.0	19.5	19.9	20.4	21.1	20.5	20.9	21.4	22.1
		Hi PR	261	281	297	310	293	316	333	348	334	359	379	396	380	409	432	450	428	460	486	507	472	508	537	560
		Lo PR	115	122	134	142	122	129	141	150	126	135	147	156	133	141	154	164	139	148	162	172	144	153	167	178
	1529	MBh	46.9	47.8	50.1	53.4	45.8	46.7	48.9	52.2	44.7	45.6	47.7	50.9	43.6	44.5	46.6	49.7	41.5	42.3	44.3	47.2	38.4	39.1	41.0	43.7
		S/T	0.99	0.96	0.87	0.70	1.00	0.99	0.90	0.73	1.00	1.00	0.92	0.75	1.00	1.00	0.95	0.77	1.00	1.00	0.99	0.80	1.00	1.00	0.99	0.81
		ΔT	28	28	26	23	28	28	26	23	27	27	26	23	26	27	27	23	25	25	26	23	23	24	25	21
		kW	3.23	3.30	3.40	3.51	3.47	3.55	3.66	3.77	3.68	3.76	3.88	4.01	3.87	3.95	4.08	4.21	4.03	4.12	4.25	4.39	4.17	4.26	4.40	4.54
		Amps	15.5	15.8	16.1	16.6	16.4	16.7	17.1	17.6	17.5	17.8	18.3	18.8	18.4	18.8	19.3	19.9	19.4	19.8	20.3	20.9	20.3	20.7	21.3	21.9
		Hi PR	259	279	294	307	291	313	330	344	330	356	375	392	376	405	428	446	423	456	481	502	468	503	532	554
		Lo PR	114	121	132	141	120	128	140	149	125	133	145	155	131	140	153	163	138	147	160	170	143	152	166	176
	1341	MBh	43.3	44.1	46.2	49.3	42.3	43.1	45.1	48.2	41.3	42.1	44.1	47.0	40.3	41.1	43.0	45.9	38.3	39.0	40.8	43.6	35.4	36.1	37.8	40.4
		S/T	0.96	0.93	0.84	0.68	0.99	0.96	0.87	0.70	1.00	0.98	0.89	0.72	1.00	1.00	0.92	0.74	1.00	1.00	0.95	0.77	1.00	1.00	0.96	0.78
		ΔT	28	28	26	23	29	28	27	23	28	28	27	23	28	28	27	23	26	27	27	23	24	25	25	22
		kW	3.16	3.22	3.32	3.42	3.39	3.46	3.57	3.68	3.60	3.67	3.79	3.91	3.78	3.86	3.98	4.11	3.93	4.02	4.14	4.28	4.06	4.15	4.29	4.43
		Amps	15.2	15.4	15.8	16.3	16.1	16.4	16.8	17.3	17.1	17.4	17.9	18.4	18.0	18.4	18.9	19.4	18.9	19.3	19.8	20.4	19.8	20.2	20.8	21.4
		Hi PR	251	270	285	298	282	303	320	334	320	345	364	380	365	393	415	433	411	442	467	487	454	488	516	538
		Lo PR	111	118	128	137	117	124	136	145	121	129	141	150	128	136	148	158	134	142	155	165	138	147	161	171

IDB: Entering Indoor Dry Bulb Temperature

Shaded area reflects AHRI (TVA) conditions.

kW = Total system power

High and low pressures are measured at the liquid and suction access fittings.

Amps: Unit amps (comp.+ evaporator + condenser fan motors)

			Outdoor Ambient Temperature																							
			65ºF				75ºF				85ºF				95ºF				105ºF				115ºF			
			Entering Indoor Wet Bulb Temperature																							
IDB	Airflow		59	63	67	71	59	63	67	71	59	63	67	71	59	63	67	71	59	63	67	71	59	63	67	71
70	1463	MBh	40.2	41.6	45.6	-	39.2	40.7	44.6	-	38.3	39.7	43.5	-	37.4	38.7	42.4	-	35.5	36.8	40.3	-	32.9	34.1	37.3	-
		S/T	0.77	0.65	0.45	-	0.80	0.67	0.46	-	0.82	0.69	0.48	-	0.85	0.71	0.49	-	0.88	0.74	0.51	-	0.89	0.74	0.51	-
		ΔT	20	17	13	-	20	17	13	-	20	17	13	-	20	17	13	-	20	17	13	-	18	16	12	-
		kW	2.88	2.94	3.03	-	3.09	3.16	3.25	-	3.28	3.35	3.45	-	3.44	3.52	3.63	-	3.59	3.66	3.78	-	3.71	3.79	3.91	-
		Amps	13.6	13.9	14.2	-	14.5	14.7	15.1	-	15.4	15.7	16.2	-	16.3	16.6	17.1	-	17.1	17.5	18.0	-	18.0	18.3	18.8	-
		Hi PR	231	248	262	-	259	279	294	-	294	317	335	-	335	361	381	-	377	406	429	-	417	449	474	-
		Lo PR	111	118	129	-	117	125	136	-	122	129	141	-	128	136	148	-	134	143	156	-	139	147	161	-
	1300	MBh	39.0	40.4	44.3	-	38.1	39.5	43.3	-	37.2	38.5	42.2	-	36.3	37.6	41.2	-	34.5	35.7	39.1	-	31.9	33.1	36.3	-
		S/T	0.74	0.62	0.43	-	0.76	0.64	0.44	-	0.78	0.65	0.45	-	0.81	0.68	0.47	-	0.84	0.70	0.49	-	0.85	0.71	0.49	-
		ΔT	20	18	13	-	21	18	14	-	21	18	14	-	21	18	14	-	20	18	13	-	19	17	13	-
		kW	2.86	2.92	3.00	-	3.07	3.13	3.23	-	3.25	3.32	3.43	-	3.42	3.49	3.60	-	3.56	3.63	3.75	-	3.68	3.76	3.88	-
		Amps	13.5	13.8	14.1	-	14.4	14.6	15.0	-	15.3	15.6	16.0	-	16.2	16.5	16.9	-	17.0	17.3	17.8	-	17.8	18.2	18.7	-
		Hi PR	228	246	260	-	256	276	291	-	292	314	331	-	332	357	377	-	374	402	424	-	413	444	469	-
		Lo PR	110	117	127	-	116	123	135	-	120	128	140	-	127	135	147	-	133	141	154	-	137	146	159	-
	1138	MBh	36.0	37.3	40.9	-	35.2	36.4	39.9	-	34.3	35.6	39.0	-	33.5	34.7	38.0	-	31.8	33.0	36.1	-	29.5	30.5	33.5	-
		S/T	0.71	0.59	0.41	-	0.74	0.62	0.43	-	0.76	0.63	0.44	-	0.78	0.65	0.45	-	0.81	0.68	0.47	-	0.82	0.68	0.47	-
		ΔT	21	18	14	-	21	18	14	-	21	18	14	-	21	18	14	-	21	18	14	-	19	17	13	-
		kW	2.79	2.85	2.93	-	3.00	3.06	3.15	-	3.18	3.24	3.34	-	3.34	3.41	3.51	-	3.47	3.55	3.66	-	3.59	3.67	3.78	-
		Amps	13.2	13.5	13.8	-	14.1	14.3	14.7	-	15.0	15.3	15.7	-	15.8	16.1	16.5	-	16.6	17.0	17.4	-	17.4	17.8	18.3	-
		Hi PR	222	238	252	-	249	268	283	-	283	304	321	-	322	347	366	-	362	390	412	-	400	431	455	-
		Lo PR	106	113	124	-	112	120	131	-	117	124	136	-	123	131	143	-	129	137	149	-	133	142	155	-
75	1463	MBh	40.9	42.1	45.5	48.9	39.9	41.1	44.5	47.7	39.0	40.1	43.4	46.6	38.0	**39.1**	42.4	45.5	36.1	37.2	40.2	43.2	33.4	34.4	37.3	40.0
		S/T	0.88	0.79	0.60	0.38	0.91	0.81	0.62	0.40	0.93	0.84	0.63	0.41	0.96	**0.86**	0.65	0.42	1.00	0.90	0.68	0.44	1.00	0.90	0.68	0.44
		ΔT	23	21	17	12	23	21	17	12	23	21	17	12	23	**21**	17	12	23	21	17	12	21	20	16	11
		kW	2.90	2.96	3.05	3.15	3.12	3.18	3.28	3.38	3.31	3.38	3.48	3.59	3.47	**3.55**	3.66	3.78	3.62	3.69	3.81	3.94	3.74	3.82	3.94	4.07
		Amps	13.7	14.0	14.3	14.7	14.6	14.8	15.2	15.7	15.6	15.9	16.3	16.8	16.4	**16.7**	17.2	17.7	17.3	17.6	18.1	18.7	18.1	18.5	19.0	19.6
		Hi PR	233	251	265	276	262	281	297	310	297	320	338	353	339	**365**	385	402	381	410	433	452	421	453	479	499
		Lo PR	112	119	130	138	118	126	137	146	123	131	143	152	129	**137**	150	160	135	144	157	167	140	149	163	173
	1300	MBh	39.7	40.8	44.2	47.4	38.7	39.9	43.2	46.3	37.8	38.9	42.2	45.2	36.9	**38.0**	41.1	44.1	35.1	36.1	39.1	41.9	32.5	33.4	36.2	38.8
		S/T	0.84	0.75	0.57	0.37	0.87	0.78	0.59	0.38	0.89	0.80	0.60	0.39	0.92	**0.82**	0.62	0.40	0.95	0.85	0.65	0.42	0.96	0.86	0.65	0.42
		ΔT	24	22	18	12	24	22	18	12	24	22	18	12	24	**22**	18	13	24	22	18	12	22	20	17	12
		kW	2.88	2.94	3.03	3.12	3.09	3.16	3.25	3.36	3.28	3.35	3.45	3.57	3.45	**3.52**	3.63	3.75	3.59	3.66	3.78	3.91	3.71	3.79	3.91	4.04
		Amps	13.6	13.9	14.2	14.6	14.5	14.7	15.1	15.6	15.4	15.7	16.2	16.6	16.3	**16.6**	17.1	17.6	17.1	17.5	18.0	18.5	18.0	18.3	18.8	19.4
		Hi PR	231	248	262	274	259	279	294	307	294	317	335	349	335	**361**	381	398	377	406	429	447	417	449	474	494
		Lo PR	111	118	129	137	117	125	136	145	122	129	141	151	128	**136**	149	158	134	143	156	166	139	147	161	171
	1138	MBh	36.6	37.7	40.8	43.8	35.8	36.8	39.9	42.8	34.9	35.9	38.9	41.8	34.1	**35.1**	38.0	40.7	32.4	33.3	36.1	38.7	30.0	30.9	33.4	35.8
		S/T	0.81	0.72	0.55	0.35	0.84	0.75	0.57	0.36	0.86	0.77	0.58	0.37	0.89	**0.79**	0.60	0.39	0.92	0.82	0.62	0.40	0.93	0.83	0.63	0.40
		ΔT	24	22	18	12	24	22	18	13	24	22	18	13	24	**22**	18	13	24	22	18	13	22	21	17	12
		kW	2.81	2.87	2.96	3.05	3.02	3.08	3.18	3.28	3.20	3.27	3.37	3.48	3.36	**3.43**	3.54	3.66	3.50	3.57	3.69	3.81	3.62	3.70	3.81	3.94
		Amps	13.3	13.6	13.9	14.3	14.2	14.4	14.8	15.2	15.1	15.4	15.8	16.3	15.9	**16.2**	16.7	17.2	16.7	17.1	17.5	18.1	17.6	17.9	18.4	19.0
		Hi PR	224	241	254	265	251	270	285	298	286	307	325	339	325	**350**	370	386	366	394	416	434	404	435	460	479
		Lo PR	108	114	125	133	114	121	132	141	118	126	137	146	124	**132**	144	153	130	138	151	161	134	143	156	166

IDB: Entering Indoor Dry Bulb Temperature

Shaded area reflects ACCA (TVA) conditions.

kW = Total system power

High and low pressures are measured at the liquid and suction access fittings.

Amps: Unit amps (comp.+ evaporator + condenser fan motors)

Expanded Cooling Data — GPG1460***M41 — Low Stage (cont.)

			Outdoor Ambient Temperature																							
			65ºF				75ºF				85ºF				95ºF				105ºF				115ºF			
			Entering Indoor Wet Bulb Temperature																							
IDB	Airflow		59	63	67	71	59	63	67	71	59	63	67	71	59	63	67	71	59	63	67	71	59	63	67	71
80	1463	MBh	41.6	42.5	45.4	48.5	40.6	41.5	44.3	47.4	39.6	40.5	43.3	46.3	38.7	39.5	42.2	45.1	36.7	37.6	40.1	42.9	34.0	34.8	37.2	39.7
		S/T	0.96	0.90	0.74	0.55	1.00	0.94	0.76	0.57	1.00	0.96	0.78	0.58	1.00	1.00	0.81	0.60	1.00	1.00	0.84	0.63	1.00	1.00	0.84	0.63
		ΔT	25	24	21	17	26	24	21	17	25	24	21	17	24	25	21	17	23	24	21	17	21	22	20	16
		kW	2.92	2.98	3.07	3.17	3.14	3.21	3.31	3.41	3.33	3.40	3.51	3.62	3.50	3.58	3.69	3.81	3.65	3.72	3.84	3.97	3.77	3.85	3.98	4.11
		Amps	13.8	14.1	14.4	14.8	14.7	14.9	15.3	15.8	15.7	16.0	16.4	16.9	16.5	16.9	17.3	17.9	17.4	17.7	18.2	18.8	18.2	18.6	19.1	19.8
		Hi PR	235	253	268	279	264	284	300	313	300	323	341	356	342	368	389	406	385	414	437	456	425	458	483	504
		Lo PR	113	120	131	140	119	127	139	148	124	132	144	154	130	139	152	161	137	145	159	169	141	150	164	175
	1300	MBh	40.4	41.3	44.1	47.1	39.4	40.3	43.1	46.0	38.5	39.3	42.0	44.9	37.6	38.4	**41.0**	43.8	35.7	36.5	39.0	41.6	33.0	33.8	36.1	38.6
		S/T	0.92	0.86	0.70	0.52	0.95	0.89	0.73	0.54	0.98	0.92	0.75	0.56	1.00	0.95	**0.77**	0.58	1.00	0.98	0.80	0.60	1.00	0.99	0.81	0.60
		ΔT	26	25	22	17	27	25	22	18	27	25	22	18	27	26	**22**	18	25	25	22	18	23	24	21	16
		kW	2.90	2.96	3.05	3.15	3.12	3.18	3.28	3.38	3.31	3.38	3.48	3.59	3.47	3.55	**3.66**	3.78	3.62	3.69	3.81	3.94	3.74	3.82	3.94	4.07
		Amps	13.7	14.0	14.3	14.7	14.6	14.8	15.2	15.7	15.6	15.9	16.3	16.8	16.4	16.7	**17.2**	17.7	17.3	17.6	18.1	18.7	18.1	18.5	19.0	19.6
		Hi PR	233	251	265	276	262	281	297	310	297	320	338	353	339	365	**385**	402	381	410	433	452	421	453	479	499
		Lo PR	112	119	130	139	118	126	137	146	123	131	143	152	129	137	**150**	160	135	144	157	167	140	149	163	173
	1138	MBh	37.3	38.1	40.7	43.5	36.4	37.2	39.7	42.5	35.5	36.3	38.8	41.5	34.7	35.4	37.8	40.5	32.9	33.6	36.0	38.4	30.5	31.2	33.3	35.6
		S/T	0.89	0.83	0.68	0.51	0.92	0.86	0.70	0.52	0.94	0.88	0.72	0.54	0.97	0.91	0.74	0.55	1.01	0.95	0.77	0.58	1.02	0.95	0.78	0.58
		ΔT	27	26	22	18	27	26	23	18	27	26	23	18	27	26	23	18	27	26	22	18	25	24	21	17
		kW	2.84	2.89	2.98	3.07	3.04	3.11	3.20	3.30	3.23	3.30	3.40	3.51	3.39	3.46	3.57	3.69	3.53	3.60	3.72	3.84	3.65	3.73	3.85	3.97
		Amps	13.4	13.7	14.0	14.4	14.3	14.5	14.9	15.3	15.2	15.5	15.9	16.4	16.0	16.4	16.8	17.3	16.9	17.2	17.7	18.2	17.7	18.1	18.6	19.1
		Hi PR	226	243	257	268	254	273	288	301	289	311	328	342	329	354	373	390	370	398	420	438	408	440	464	484
		Lo PR	109	116	126	134	115	122	133	142	119	127	139	148	125	133	146	155	131	140	152	162	136	144	158	168
85	1463	MBh	42.3	43.1	45.2	48.2	41.3	42.1	44.1	47.1	40.3	41.1	43.1	45.9	39.4	40.1	42.0	44.8	37.4	38.1	39.9	42.6	34.6	35.3	37.0	39.4
		S/T	1.00	0.98	0.88	0.71	1.00	1.00	0.91	0.74	1.00	1.00	0.94	0.76	1.00	1.00	0.97	0.78	1.00	1.00	1.00	0.81	1.00	1.00	1.00	0.82
		ΔT	27	26	25	22	26	26	25	22	25	26	25	22	25	25	26	22	24	24	25	22	22	22	23	20
		kW	2.95	3.01	3.10	3.19	3.17	3.23	3.33	3.44	3.36	3.43	3.54	3.65	3.53	3.61	3.72	3.84	3.67	3.75	3.88	4.00	3.80	3.88	4.01	4.14
		Amps	13.9	14.2	14.5	14.9	14.8	15.1	15.4	15.9	15.8	16.1	16.5	17.0	16.7	17.0	17.5	18.0	17.5	17.9	18.4	19.0	18.4	18.8	19.3	19.9
		Hi PR	238	256	270	282	267	287	303	316	303	327	345	360	346	372	393	410	389	418	442	461	430	462	488	509
		Lo PR	114	122	133	141	121	128	140	149	125	133	146	155	132	140	153	163	138	147	160	171	143	152	166	177
	1300	MBh	41.1	41.9	43.9	46.8	40.1	40.9	42.8	45.7	39.2	39.9	41.8	44.6	38.2	39.0	40.8	43.5	36.3	37.0	38.8	41.3	33.6	34.3	35.9	38.3
		S/T	0.96	0.93	0.84	0.68	1.00	0.96	0.87	0.71	1.00	0.99	0.89	0.72	1.00	1.00	0.92	0.75	1.00	1.00	0.96	0.78	1.00	1.00	0.96	0.78
		ΔT	28	28	26	23	28	28	26	23	28	28	26	23	27	28	27	23	26	26	26	23	24	24	24	21
		kW	2.92	2.98	3.07	3.17	3.14	3.21	3.31	3.41	3.33	3.40	3.51	3.62	3.50	3.58	3.69	3.81	3.65	3.72	3.84	3.97	3.77	3.85	3.98	4.11
		Amps	13.8	14.1	14.4	14.8	14.7	14.9	15.3	15.8	15.7	16.0	16.4	16.9	16.5	16.9	17.3	17.9	17.4	17.7	18.2	18.8	18.2	18.6	19.1	19.8
		Hi PR	235	253	268	279	264	284	300	313	300	323	341	356	342	368	389	406	385	414	437	456	425	458	483	504
		Lo PR	113	120	131	140	119	127	139	148	124	132	144	154	130	139	152	161	137	145	159	169	141	150	164	175
	1138	MBh	37.9	38.6	40.5	43.2	37.0	37.7	39.5	42.2	36.2	36.9	38.6	41.2	35.3	36.0	37.7	40.2	33.5	34.2	35.8	38.2	31.0	31.6	33.1	35.4
		S/T	0.93	0.90	0.81	0.66	0.96	0.93	0.84	0.68	0.99	0.95	0.86	0.70	1.00	0.98	0.89	0.72	1.00	1.00	0.92	0.75	1.00	1.00	0.93	0.75
		ΔT	28	28	26	23	29	28	27	23	29	28	27	23	29	29	27	23	27	28	27	23	25	26	25	22
		kW	2.86	2.91	3.00	3.10	3.07	3.13	3.23	3.33	3.25	3.32	3.43	3.54	3.42	3.49	3.60	3.72	3.56	3.63	3.75	3.87	3.68	3.76	3.88	4.01
		Amps	13.5	13.8	14.1	14.5	14.4	14.6	15.0	15.4	15.3	15.6	16.0	16.5	16.2	16.5	16.9	17.4	17.0	17.3	17.8	18.4	17.8	18.2	18.7	19.3
		Hi PR	228	246	260	271	256	276	291	304	291	314	331	345	332	357	377	393	373	402	424	443	413	444	469	489
		Lo PR	110	117	127	136	116	123	135	143	120	128	140	149	127	135	147	157	133	141	154	164	137	146	159	170

IDB: Entering Indoor Dry Bulb Temperature

Shaded area reflects AHRI (TVA) conditions.

kW = Total system power

High and low pressures are measured at the liquid and suction access fittings.

Amps: Unit amps (comp.+ evaporator + condenser fan motors)

			Outdoor Ambient Temperature																							
			65ºF				75ºF				85ºF				95ºF				105ºF				115ºF			
			Entering Indoor Wet Bulb Temperature																							
IDB	Airflow		59	63	67	71	59	63	67	71	59	63	67	71	59	63	67	71	59	63	67	71	59	63	67	71
70	2036	MBh	55.4	57.4	62.9	-	54.1	56.1	61.4	-	52.8	54.7	59.9	-	51.5	53.4	58.5	-	48.9	50.7	55.6	-	45.3	47.0	51.5	-
		S/T	0.77	0.65	0.45	-	0.80	0.67	0.46	-	0.82	0.69	0.48	-	0.85	0.71	0.49	-	0.88	0.74	0.51	-	0.89	0.74	0.51	-
		ΔT	19	17	13	-	20	17	13	-	20	17	13	-	20	17	13	-	19	17	13	-	18	16	12	-
		kW	4.41	4.50	4.64	-	4.73	4.83	4.98	-	5.02	5.12	5.28	-	5.27	5.38	5.55	-	5.48	5.60	5.77	-	5.66	5.78	5.97	-
		Amps	21.5	21.8	22.4	-	22.7	23.1	23.7	-	24.2	24.6	25.3	-	25.4	25.9	26.6	-	26.7	27.2	27.9	-	28.0	28.5	29.3	-
		Hi PR	256	276	291	-	288	310	327	-	327	352	372	-	373	401	424	-	419	451	477	-	463	499	527	-
		Lo PR	107	114	124	-	113	120	131	-	118	125	137	-	124	131	144	-	130	138	150	-	134	143	156	-
	1810	MBh	53.8	55.7	61.0	-	52.5	54.4	59.6	-	51.3	53.1	58.2	-	50.0	51.8	56.8	-	47.5	49.2	53.9	-	44.0	45.6	50.0	-
		S/T	0.74	0.62	0.43	-	0.76	0.64	0.44	-	0.78	0.65	0.45	-	0.81	0.68	0.47	-	0.84	0.70	0.49	-	0.85	0.71	0.49	-
		ΔT	20	17	13	-	20	18	13	-	20	18	13	-	21	18	14	-	20	18	13	-	19	16	12	-
		kW	4.38	4.47	4.60	-	4.70	4.79	4.94	-	4.98	5.08	5.24	-	5.23	5.34	5.50	-	5.44	5.55	5.73	-	5.62	5.74	5.92	-
		Amps	21.3	21.7	22.2	-	22.6	23.0	23.5	-	24.0	24.5	25.1	-	25.3	25.7	26.4	-	26.5	27.0	27.7	-	27.8	28.3	29.1	-
		Hi PR	254	273	289	-	285	307	324	-	324	349	368	-	369	397	419	-	415	447	472	-	459	494	521	-
		Lo PR	106	113	123	-	112	119	130	-	116	124	135	-	122	130	142	-	128	136	149	-	133	141	154	-
	1584	MBh	49.6	51.4	56.3	-	48.5	50.2	55.0	-	47.3	49.0	53.7	-	46.2	47.8	52.4	-	43.8	45.4	49.8	-	40.6	42.1	46.1	-
		S/T	0.71	0.59	0.41	-	0.74	0.62	0.43	-	0.76	0.63	0.44	-	0.78	0.65	0.45	-	0.81	0.68	0.47	-	0.82	0.68	0.47	-
		ΔT	20	18	13	-	21	18	14	-	21	18	14	-	21	18	14	-	21	18	14	-	19	17	13	-
		kW	4.28	4.37	4.50	-	4.59	4.68	4.82	-	4.86	4.96	5.11	-	5.10	5.21	5.37	-	5.31	5.42	5.59	-	5.48	5.60	5.78	-
		Amps	20.9	21.3	21.8	-	22.1	22.5	23.1	-	23.5	24.0	24.6	-	24.7	25.2	25.8	-	25.9	26.4	27.1	-	27.1	27.7	28.4	-
		Hi PR	246	265	280	-	276	297	314	-	314	338	357	-	358	385	407	-	403	433	458	-	445	479	506	-
		Lo PR	103	109	120	-	109	116	126	-	113	120	131	-	119	126	138	-	124	132	144	-	129	137	149	-
75	2036	MBh	56.3	58.0	62.7	67.3	55.0	56.6	61.3	65.8	53.7	55.3	59.8	64.2	52.4	**53.9**	58.4	62.6	49.8	51.2	55.5	59.5	46.1	47.5	51.4	55.1
		S/T	0.88	0.79	0.60	0.38	0.91	0.81	0.62	0.40	0.93	0.84	0.63	0.41	0.96	**0.86**	0.65	0.42	1.00	0.90	0.68	0.44	1.00	0.90	0.68	0.44
		ΔT	22	21	17	12	23	21	17	12	23	21	17	12	23	**21**	17	12	22	21	17	12	21	19	16	11
		kW	4.45	4.54	4.67	4.81	4.77	4.87	5.02	5.17	5.06	5.16	5.32	5.49	5.31	**5.42**	5.59	5.77	5.52	5.64	5.82	6.01	5.71	5.83	6.02	6.21
		Amps	21.6	22.0	22.5	23.1	22.9	23.3	23.9	24.5	24.4	24.8	25.4	26.2	25.6	**26.1**	26.8	27.6	26.9	27.4	28.2	29.0	28.2	28.7	29.5	30.4
		Hi PR	259	279	294	307	291	313	330	345	331	356	376	392	377	**405**	428	446	424	456	481	502	468	504	532	555
		Lo PR	108	115	126	134	114	122	133	141	119	126	138	147	125	**133**	145	154	131	139	152	162	135	144	157	167
	1810	MBh	54.7	56.3	60.9	65.4	53.4	55.0	59.5	63.9	52.1	53.7	58.1	62.3	50.9	**52.4**	56.7	60.8	48.3	49.7	53.8	57.8	44.7	46.1	49.9	53.5
		S/T	0.84	0.75	0.57	0.37	0.87	0.78	0.59	0.38	0.89	0.80	0.60	0.39	0.92	**0.82**	0.62	0.40	0.95	0.85	0.65	0.42	0.96	0.86	0.65	0.42
		ΔT	23	21	18	12	24	22	18	12	24	22	18	12	24	**22**	18	12	23	22	18	12	22	20	17	11
		kW	4.41	4.50	4.64	4.78	4.73	4.83	4.98	5.13	5.02	5.12	5.28	5.45	5.27	**5.38**	5.55	5.72	5.48	5.60	5.77	5.96	5.66	5.78	5.97	6.16
		Amps	21.5	21.8	22.4	23.0	22.7	23.1	23.7	24.4	24.2	24.6	25.3	26.0	25.5	**25.9**	26.6	27.4	26.7	27.2	28.0	28.8	28.0	28.5	29.3	30.2
		Hi PR	257	276	292	304	288	310	327	341	327	352	372	388	373	**401**	424	442	419	451	477	497	463	499	527	549
		Lo PR	107	114	124	133	113	120	131	140	118	125	137	146	124	**131**	144	153	130	138	150	160	134	143	156	166
	1584	MBh	50.5	51.9	56.2	60.3	49.3	50.7	54.9	58.9	48.1	49.5	53.6	57.5	46.9	**48.3**	52.3	56.1	44.6	45.9	49.7	53.3	41.3	42.5	46.0	49.4
		S/T	0.81	0.72	0.55	0.35	0.84	0.75	0.57	0.36	0.86	0.77	0.58	0.37	0.89	**0.79**	0.60	0.39	0.92	0.82	0.62	0.40	0.93	0.83	0.63	0.40
		ΔT	24	22	18	12	24	22	18	12	24	22	18	12	24	**22**	18	13	24	22	18	12	22	20	17	12
		kW	4.32	4.40	4.53	4.67	4.63	4.72	4.86	5.01	4.90	5.00	5.16	5.32	5.14	**5.25**	5.41	5.59	5.35	5.46	5.63	5.81	5.53	5.64	5.82	6.01
		Amps	21.0	21.4	21.9	22.5	22.3	22.7	23.2	23.9	23.7	24.1	24.7	25.4	24.9	**25.4**	26.0	26.8	26.1	26.6	27.3	28.2	27.3	27.9	28.6	29.5
		Hi PR	249	268	283	295	279	300	317	331	318	342	361	376	362	**389**	411	429	407	438	462	482	450	484	511	533
		Lo PR	104	111	121	129	110	117	128	136	114	121	133	141	120	**128**	139	148	126	134	146	155	130	138	151	161

IDB: Entering Indoor Dry Bulb Temperature

Shaded area reflects ACCA (TVA) conditions.

kW = Total system power

High and low pressures are measured at the liquid and suction access fittings.

Amps: Unit amps (comp.+ evaporator + condenser fan motors)

			Outdoor Ambient Temperature																							
			65ºF				75ºF				85ºF				95ºF				105ºF				115ºF			
			Entering Indoor Wet Bulb Temperature																							
IDB	Airflow		59	63	67	71	59	63	67	71	59	63	67	71	59	63	67	71	59	63	67	71	59	63	67	71
80	2036	MBh	57.3	58.6	62.6	66.9	56.0	57.2	61.1	65.3	54.6	55.8	59.6	63.8	53.3	54.5	58.2	62.2	50.6	51.7	55.3	59.1	46.9	47.9	51.2	54.7
		S/T	0.96	0.90	0.74	0.55	1.00	0.94	0.76	0.57	1.00	0.96	0.78	0.58	1.00	1.00	0.81	0.60	1.00	1.00	0.84	0.63	1.00	1.00	0.84	0.63
		ΔT	25	24	21	17	25	24	21	17	25	24	21	17	24	25	21	17	23	23	21	17	21	22	20	16
		kW	4.48	4.57	4.71	4.85	4.81	4.91	5.06	5.22	5.10	5.20	5.37	5.54	5.35	5.46	5.64	5.82	5.57	5.69	5.87	6.06	5.75	5.88	6.07	6.27
		Amps	21.7	22.1	22.7	23.3	23.0	23.5	24.0	24.7	24.5	25.0	25.6	26.4	25.8	26.3	27.0	27.8	27.1	27.6	28.4	29.2	28.4	28.9	29.7	30.6
		Hi PR	262	282	297	310	294	316	334	348	334	359	380	396	380	409	432	451	428	461	486	507	473	509	537	560
		Lo PR	109	116	127	135	116	123	134	143	120	128	139	148	126	134	146	156	132	141	153	163	137	145	159	169
	1810	MBh	55.6	56.9	60.7	64.9	54.3	55.5	59.3	63.4	53.0	54.2	57.9	61.9	51.8	52.9	**56.5**	60.4	49.2	50.2	53.7	57.4	45.5	46.5	49.7	53.2
		S/T	0.92	0.86	0.70	0.52	0.95	0.89	0.73	0.54	0.98	0.92	0.75	0.56	1.00	0.95	**0.77**	0.58	1.00	0.98	0.80	0.60	1.00	0.99	0.81	0.60
		ΔT	26	25	22	17	26	25	22	18	26	25	22	18	26	25	**22**	18	25	25	22	17	23	23	20	16
		kW	4.45	4.54	4.67	4.82	4.77	4.87	5.02	5.17	5.06	5.16	5.32	5.49	5.31	5.42	**5.59**	5.77	5.52	5.64	5.82	6.01	5.71	5.83	6.02	6.21
		Amps	21.6	22.0	22.5	23.1	22.9	23.3	23.9	24.5	24.4	24.8	25.4	26.2	25.6	26.1	**26.8**	27.6	26.9	27.4	28.2	29.0	28.2	28.7	29.5	30.4
		Hi PR	259	279	294	307	291	313	330	345	331	356	376	392	377	405	**428**	446	424	456	482	502	468	504	532	555
		Lo PR	108	115	126	134	114	122	133	141	119	126	138	147	125	133	**145**	154	131	139	152	162	135	144	157	167
	1584	MBh	51.4	52.5	56.1	59.9	50.2	51.3	54.8	58.5	49.0	50.0	53.5	57.1	47.8	48.8	52.1	55.7	45.4	46.4	49.5	53.0	42.0	43.0	45.9	49.1
		S/T	0.89	0.83	0.68	0.51	0.92	0.86	0.70	0.52	0.94	0.88	0.72	0.54	0.97	0.91	0.74	0.55	1.01	0.95	0.77	0.58	1.02	0.95	0.78	0.58
		ΔT	26	25	22	18	27	26	22	18	27	26	22	18	27	26	22	18	27	25	22	18	25	24	21	17
		kW	4.35	4.43	4.57	4.70	4.66	4.76	4.90	5.05	4.94	5.04	5.20	5.36	5.18	5.29	5.46	5.63	5.39	5.51	5.68	5.86	5.57	5.69	5.87	6.06
		Amps	21.2	21.5	22.1	22.7	22.4	22.8	23.4	24.0	23.9	24.3	24.9	25.6	25.1	25.6	26.2	27.0	26.3	26.8	27.5	28.4	27.5	28.1	28.8	29.7
		Hi PR	251	270	286	298	282	304	321	334	321	345	365	380	365	393	415	433	411	442	467	487	454	489	516	538
		Lo PR	105	112	122	130	111	118	129	137	115	123	134	143	121	129	141	150	127	135	147	157	131	140	152	162
85	2036	MBh	58.3	59.4	62.2	66.4	56.9	58.1	60.8	64.9	55.6	56.7	59.4	63.3	54.2	55.3	57.9	61.8	51.5	52.5	55.0	58.7	47.7	48.7	51.0	54.4
		S/T	1.00	0.98	0.88	0.71	1.00	1.00	0.91	0.74	1.00	1.00	0.94	0.76	1.00	1.00	0.97	0.78	1.00	1.00	1.00	0.81	1.00	1.00	1.00	0.82
		ΔT	26	26	25	21	26	26	25	22	25	26	25	22	24	25	25	22	23	24	25	22	22	22	23	20
		kW	4.52	4.61	4.74	4.89	4.85	4.94	5.10	5.26	5.14	5.24	5.41	5.58	5.39	5.51	5.68	5.87	5.61	5.73	5.92	6.11	5.80	5.93	6.12	6.32
		Amps	21.9	22.3	22.8	23.4	23.2	23.6	24.2	24.9	24.7	25.2	25.8	26.6	26.0	26.5	27.2	28.0	27.3	27.8	28.6	29.4	28.6	29.2	29.9	30.9
		Hi PR	264	284	300	313	297	319	337	352	337	363	383	400	384	413	437	455	432	465	491	512	478	514	543	566
		Lo PR	110	117	128	137	117	124	135	144	121	129	141	150	127	135	148	158	133	142	155	165	138	147	160	171
	1810	MBh	56.6	57.7	60.4	64.5	55.3	56.4	59.0	63.0	54.0	55.0	57.6	61.5	52.7	53.7	56.2	60.0	50.0	51.0	53.4	57.0	46.3	47.2	49.5	52.8
		S/T	0.96	0.93	0.84	0.68	1.00	0.96	0.87	0.71	1.00	0.99	0.89	0.72	1.00	1.00	0.92	0.75	1.00	1.00	0.96	0.78	1.00	1.00	0.96	0.78
		ΔT	28	27	26	22	28	28	26	23	27	28	26	23	27	27	26	23	25	26	26	22	24	24	24	21
		kW	4.48	4.57	4.71	4.85	4.81	4.91	5.06	5.22	5.10	5.20	5.37	5.54	5.35	5.46	5.64	5.82	5.57	5.69	5.87	6.06	5.75	5.88	6.07	6.27
		Amps	21.7	22.1	22.7	23.3	23.0	23.5	24.0	24.7	24.5	25.0	25.6	26.4	25.8	26.3	27.0	27.8	27.1	27.6	28.4	29.2	28.4	28.9	29.7	30.6
		Hi PR	262	282	297	310	294	316	334	348	334	359	380	396	380	409	432	451	428	461	486	507	473	509	537	560
		Lo PR	109	116	127	135	116	123	134	143	120	128	139	148	126	134	146	156	132	141	153	163	137	145	159	169
	1584	MBh	52.2	53.3	55.8	59.5	51.0	52.0	54.5	58.1	49.8	50.8	53.2	56.7	48.6	49.5	51.9	55.4	46.2	47.1	49.3	52.6	42.8	43.6	45.7	48.7
		S/T	0.93	0.90	0.81	0.66	0.96	0.93	0.84	0.68	0.99	0.95	0.86	0.70	1.00	0.98	0.89	0.72	1.00	1.00	0.92	0.75	1.00	1.00	0.93	0.75
		ΔT	28	28	26	23	29	28	27	23	29	28	27	23	28	28	27	23	27	27	26	23	25	25	25	21
		kW	4.38	4.47	4.60	4.74	4.70	4.79	4.94	5.09	4.98	5.08	5.24	5.40	5.22	5.33	5.50	5.68	5.43	5.55	5.73	5.91	5.62	5.74	5.92	6.11
		Amps	21.3	21.7	22.2	22.8	22.6	23.0	23.5	24.2	24.0	24.5	25.1	25.8	25.3	25.7	26.4	27.2	26.5	27.0	27.7	28.6	27.7	28.3	29.0	29.9
		Hi PR	254	273	288	301	285	307	324	338	324	349	368	384	369	397	419	437	415	447	472	492	459	494	521	544
		Lo PR	106	113	123	131	112	119	130	139	116	124	135	144	122	130	142	151	128	136	149	159	133	141	154	164

IDB: Entering Indoor Dry Bulb Temperature

Shaded area reflects AHRI (TVA) conditions.

kW = Total system power

High and low pressures are measured at the liquid and suction access fittings.

Amps: Unit amps (comp.+ evaporator + condenser fan motors)

Expanded Cooling Data — GPG1461***M41 — Low Stage

			Outdoor Ambient Temperature																							
			65				75				85				95				105				115			
			Entering Indoor Wet Bulb Temperature																							
IDB	Airflow		59	63	67	71	59	63	67	71	59	63	67	71	59	63	67	71	59	63	67	71	59	63	67	71
70	1463	MBh	40.2	41.6	45.6	-	39.2	40.7	44.6	-	38.3	39.7	43.5	-	37.4	38.7	42.4	-	35.5	36.8	40.3	-	32.9	34.1	37.3	-
		S/T	0.77	0.65	0.45	-	0.80	0.67	0.46	-	0.82	0.69	0.48	-	0.85	0.71	0.49	-	0.88	0.74	0.51	-	0.89	0.74	0.51	-
		ΔT	20	17	13	-	20	17	13	-	20	17	13	-	20	17	13	-	20	17	13	-	18	16	12	-
		kW	2.88	2.94	3.03	-	3.09	3.16	3.25	-	3.28	3.35	3.45	-	3.44	3.52	3.63	-	3.59	3.66	3.78	-	3.71	3.79	3.91	-
		Amps	13.6	13.9	14.2	-	14.5	14.7	15.1	-	15.4	15.7	16.2	-	16.3	16.6	17.1	-	17.1	17.5	18.0	-	18.0	18.3	18.8	-
		Hi PR	231	248	262	-	259	279	294	-	294	317	335	-	335	361	381	-	377	406	429	-	417	449	474	-
		Lo PR	111	118	129	-	117	125	136	-	122	129	141	-	128	136	148	-	134	143	156	-	139	147	161	-
	1300	MBh	39.0	40.4	44.3	-	38.1	39.5	43.3	-	37.2	38.5	42.2	-	36.3	37.6	41.2	-	34.5	35.7	39.1	-	31.9	33.1	36.3	-
		S/T	0.74	0.62	0.43	-	0.76	0.64	0.44	-	0.78	0.65	0.45	-	0.81	0.68	0.47	-	0.84	0.70	0.49	-	0.85	0.71	0.49	-
		ΔT	20	18	13	-	21	18	14	-	21	18	14	-	21	18	14	-	20	18	13	-	19	17	13	-
		kW	2.86	2.92	3.00	-	3.07	3.13	3.23	-	3.25	3.32	3.43	-	3.42	3.49	3.60	-	3.56	3.63	3.75	-	3.68	3.76	3.88	-
		Amps	13.5	13.8	14.1	-	14.4	14.6	15.0	-	15.3	15.6	16.0	-	16.2	16.5	16.9	-	17.0	17.3	17.8	-	17.8	18.2	18.7	-
		Hi PR	228	246	260	-	256	276	291	-	292	314	331	-	332	357	377	-	374	402	424	-	413	444	469	-
		Lo PR	110	117	127	-	116	123	135	-	120	128	140	-	127	135	147	-	133	141	154	-	137	146	159	-
	1138	MBh	36.0	37.3	40.9	-	35.2	36.4	39.9	-	34.3	35.6	39.0	-	33.5	34.7	38.0	-	31.8	33.0	36.1	-	29.5	30.5	33.5	-
		S/T	0.71	0.59	0.41	-	0.74	0.62	0.43	-	0.76	0.63	0.44	-	0.78	0.65	0.45	-	0.81	0.68	0.47	-	0.82	0.68	0.47	-
		ΔT	21	18	14	-	21	18	14	-	21	18	14	-	21	18	14	-	21	18	14	-	19	17	13	-
		kW	2.79	2.85	2.93	-	3.00	3.06	3.15	-	3.18	3.24	3.34	-	3.34	3.41	3.51	-	3.47	3.55	3.66	-	3.59	3.67	3.78	-
		Amps	13.2	13.5	13.8	-	14.1	14.3	14.7	-	15.0	15.3	15.7	-	15.8	16.1	16.5	-	16.6	17.0	17.4	-	17.4	17.8	18.3	-
		Hi PR	222	238	252	-	249	268	283	-	283	304	321	-	322	347	366	-	362	390	412	-	400	431	455	-
		Lo PR	106	113	124	-	112	120	131	-	117	124	136	-	123	131	143	-	129	137	149	-	133	142	155	-
75	1463	MBh	40.9	42.1	45.5	48.9	39.9	41.1	44.5	47.7	39.0	40.1	43.4	46.6	38.0	39.1	42.4	45.5	36.1	37.2	40.2	43.2	33.4	34.4	37.3	40.0
		S/T	0.88	0.79	0.60	0.38	0.91	0.81	0.62	0.40	0.93	0.84	0.63	0.41	0.96	0.86	0.65	0.42	1.00	0.90	0.68	0.44	1.00	0.90	0.68	0.44
		ΔT	23	21	17	12	23	21	17	12	23	21	17	12	23	21	17	12	23	21	17	12	21	20	16	11
		kW	2.90	2.96	3.05	3.15	3.12	3.18	3.28	3.38	3.31	3.38	3.48	3.59	3.47	3.55	3.66	3.78	3.62	3.69	3.81	3.94	3.74	3.82	3.94	4.07
		Amps	13.7	14.0	14.3	14.7	14.6	14.8	15.2	15.7	15.6	15.9	16.3	16.8	16.4	16.7	17.2	17.7	17.3	17.6	18.1	18.7	18.1	18.5	19.0	19.6
		Hi PR	233	251	265	276	262	281	297	310	297	320	338	353	339	365	385	402	381	410	433	452	421	453	479	499
		Lo PR	112	119	130	138	118	126	137	146	123	131	143	152	129	137	150	160	135	144	157	167	140	149	163	173
	1300	MBh	39.7	40.8	44.2	47.4	38.7	39.9	43.2	46.3	37.8	38.9	42.2	45.2	36.9	**38.0**	41.1	44.1	35.1	36.1	39.1	41.9	32.5	33.4	36.2	38.8
		S/T	0.84	0.75	0.57	0.37	0.87	0.78	0.59	0.38	0.89	0.80	0.60	0.39	0.92	**0.82**	0.62	0.40	0.95	0.85	0.65	0.42	0.96	0.86	0.65	0.42
		ΔT	24	22	18	12	24	22	18	12	24	22	18	12	24	**22**	18	13	24	22	18	12	22	20	17	12
		kW	2.88	2.94	3.03	3.12	3.09	3.16	3.25	3.36	3.28	3.35	3.45	3.57	3.45	**3.52**	3.63	3.75	3.59	3.66	3.78	3.91	3.71	3.79	3.91	4.04
		Amps	13.6	13.9	14.2	14.6	14.5	14.7	15.1	15.6	15.4	15.7	16.2	16.6	16.3	**16.6**	17.1	17.6	17.1	17.5	18.0	18.5	18.0	18.3	18.8	19.4
		Hi PR	231	248	262	274	259	279	294	307	294	317	335	349	335	**361**	381	398	377	406	429	447	417	449	474	494
		Lo PR	111	118	129	137	117	125	136	145	122	129	141	151	128	**136**	149	158	134	143	156	166	139	147	161	171
	1138	MBh	36.6	37.7	40.8	43.8	35.8	36.8	39.9	42.8	34.9	35.9	38.9	41.8	34.1	35.1	38.0	40.7	32.4	33.3	36.1	38.7	30.0	30.9	33.4	35.8
		S/T	0.81	0.72	0.55	0.35	0.84	0.75	0.57	0.36	0.86	0.77	0.58	0.37	0.89	0.79	0.60	0.39	0.92	0.82	0.62	0.40	0.93	0.83	0.63	0.40
		ΔT	24	22	18	12	24	22	18	13	24	22	18	13	24	22	18	13	24	22	18	13	22	21	17	12
		kW	2.81	2.87	2.96	3.05	3.02	3.08	3.18	3.28	3.20	3.27	3.37	3.48	3.36	3.43	3.54	3.66	3.50	3.57	3.69	3.81	3.62	3.70	3.81	3.94
		Amps	13.3	13.6	13.9	14.3	14.2	14.4	14.8	15.2	15.1	15.4	15.8	16.3	15.9	16.2	16.7	17.2	16.7	17.1	17.5	18.1	17.6	17.9	18.4	19.0
		Hi PR	224	241	254	265	251	270	285	298	286	307	325	339	325	350	370	386	366	394	416	434	404	435	460	479
		Lo PR	108	114	125	133	114	121	132	141	118	126	137	146	124	132	144	153	130	138	151	161	134	143	156	166

IDB: Entering Indoor Dry Bulb Temperature

Shaded area reflects ACCA (TVA) conditions.

kW = Total system power

High and low pressures are measured at the liquid and suction access fittings.

Amps: Unit amps (comp.+ evaporator + condenser fan motors)

Expanded Cooling Data — GPG1461***M41 — Low Stage (cont.)

			Outdoor Ambient Temperature																							
			65				75				85				95				105				115			
			Entering Indoor Wet Bulb Temperature																							
IDB	Airflow		59	63	67	71	59	63	67	71	59	63	67	71	59	63	67	71	59	63	67	71	59	63	67	71
80	1463	MBh	41.6	42.5	45.4	48.5	40.6	41.5	44.3	47.4	39.6	40.5	43.3	46.3	38.7	39.5	42.2	45.1	36.7	37.6	40.1	42.9	34.0	34.8	37.2	39.7
		S/T	0.96	0.90	0.74	0.55	1.00	0.94	0.76	0.57	1.00	0.96	0.78	0.58	1.00	1.00	0.81	0.60	1.00	1.00	0.84	0.63	1.00	1.00	0.84	0.63
		ΔT	25	24	21	17	26	24	21	17	25	24	21	17	24	25	21	17	23	24	21	17	21	22	20	16
		kW	2.92	2.98	3.07	3.17	3.14	3.21	3.31	3.41	3.33	3.40	3.51	3.62	3.50	3.58	3.69	3.81	3.65	3.72	3.84	3.97	3.77	3.85	3.98	4.11
		Amps	13.8	14.1	14.4	14.8	14.7	14.9	15.3	15.8	15.7	16.0	16.4	16.9	16.5	16.9	17.3	17.9	17.4	17.7	18.2	18.8	18.2	18.6	19.1	19.8
		Hi PR	235	253	268	279	264	284	300	313	300	323	341	356	342	368	389	406	385	414	437	456	425	458	483	504
		Lo PR	113	120	131	140	119	127	139	148	124	132	144	154	130	139	152	161	137	145	159	169	141	150	164	175
	1300	MBh	40.4	41.3	44.1	47.1	39.4	40.3	43.1	46.0	38.5	39.3	42.0	44.9	37.6	38.4	**41.0**	43.8	35.7	36.5	39.0	41.6	33.0	33.8	36.1	38.6
		S/T	0.92	0.86	0.70	0.52	0.95	0.89	0.73	0.54	0.98	0.92	0.75	0.56	1.00	0.95	**0.77**	0.58	1.00	0.98	0.80	0.60	1.00	0.99	0.81	0.60
		ΔT	26	25	22	17	27	25	22	18	27	25	22	18	27	26	**22**	18	25	25	22	18	23	24	21	16
		kW	2.90	2.96	3.05	3.15	3.12	3.18	3.28	3.38	3.31	3.38	3.48	3.59	3.47	3.55	**3.66**	3.78	3.62	3.69	3.81	3.94	3.74	3.82	3.94	4.07
		Amps	13.7	14.0	14.3	14.7	14.6	14.8	15.2	15.7	15.6	15.9	16.3	16.8	16.4	16.7	**17.2**	17.7	17.3	17.6	18.1	18.7	18.1	18.5	19.0	19.6
		Hi PR	233	251	265	276	262	281	297	310	297	320	338	353	339	365	**385**	402	381	410	433	452	421	453	479	499
		Lo PR	112	119	130	139	118	126	137	146	123	131	143	152	129	137	**150**	160	135	144	157	167	140	149	163	173
	1138	MBh	37.3	38.1	40.7	43.5	36.4	37.2	39.7	42.5	35.5	36.3	38.8	41.5	34.7	35.4	37.8	40.5	32.9	33.6	36.0	38.4	30.5	31.2	33.3	35.6
		S/T	0.89	0.83	0.68	0.51	0.92	0.86	0.70	0.52	0.94	0.88	0.72	0.54	0.97	0.91	0.74	0.55	1.01	0.95	0.77	0.58	1.02	0.95	0.78	0.58
		ΔT	27	26	22	18	27	26	23	18	27	26	23	18	27	26	23	18	27	26	22	18	25	24	21	17
		kW	2.84	2.89	2.98	3.07	3.04	3.11	3.20	3.30	3.23	3.30	3.40	3.51	3.39	3.46	3.57	3.69	3.53	3.60	3.72	3.84	3.65	3.73	3.85	3.97
		Amps	13.4	13.7	14.0	14.4	14.3	14.5	14.9	15.3	15.2	15.5	15.9	16.4	16.0	16.4	16.8	17.3	16.9	17.2	17.7	18.2	17.7	18.1	18.6	19.1
		Hi PR	226	243	257	268	254	273	288	301	289	311	328	342	329	354	373	390	370	398	420	438	408	440	464	484
		Lo PR	109	116	126	134	115	122	133	142	119	127	139	148	125	133	146	155	131	140	152	162	136	144	158	168
85	1463	MBh	42.3	43.1	45.2	48.2	41.3	42.1	44.1	47.1	40.3	41.1	43.1	45.9	39.4	40.1	42.0	44.8	37.4	38.1	39.9	42.6	34.6	35.3	37.0	39.4
		S/T	1.00	0.98	0.88	0.71	1.00	1.00	0.91	0.74	1.00	1.00	0.94	0.76	1.00	1.00	0.97	0.78	1.00	1.00	1.00	0.81	1.00	1.00	1.00	0.82
		ΔT	27	26	25	22	26	26	25	22	25	26	25	22	25	25	26	22	24	24	25	22	22	22	23	20
		kW	2.95	3.01	3.10	3.19	3.17	3.23	3.33	3.44	3.36	3.43	3.54	3.65	3.53	3.61	3.72	3.84	3.67	3.75	3.88	4.00	3.80	3.88	4.01	4.14
		Amps	13.9	14.2	14.5	14.9	14.8	15.1	15.4	15.9	15.8	16.1	16.5	17.0	16.7	17.0	17.5	18.0	17.5	17.9	18.4	19.0	18.4	18.8	19.3	19.9
		Hi PR	238	256	270	282	267	287	303	316	303	327	345	360	346	372	393	410	389	418	442	461	430	462	488	509
		Lo PR	114	122	133	141	121	128	140	149	125	133	146	155	132	140	153	163	138	147	160	171	143	152	166	177
	1300	MBh	41.1	41.9	43.9	46.8	40.1	40.9	42.8	45.7	39.2	39.9	41.8	44.6	38.2	39.0	40.8	43.5	36.3	37.0	38.8	41.3	33.6	34.3	35.9	38.3
		S/T	0.96	0.93	0.84	0.68	1.00	0.96	0.87	0.71	1.00	0.99	0.89	0.72	1.00	1.00	0.92	0.75	1.00	1.00	0.96	0.78	1.00	1.00	0.96	0.78
		ΔT	28	28	26	23	28	28	26	23	28	28	26	23	27	28	27	23	26	26	26	23	24	24	24	21
		kW	2.92	2.98	3.07	3.17	3.14	3.21	3.31	3.41	3.33	3.40	3.51	3.62	3.50	3.58	3.69	3.81	3.65	3.72	3.84	3.97	3.77	3.85	3.98	4.11
		Amps	13.8	14.1	14.4	14.8	14.7	14.9	15.3	15.8	15.7	16.0	16.4	16.9	16.5	16.9	17.3	17.9	17.4	17.7	18.2	18.8	18.2	18.6	19.1	19.8
		Hi PR	235	253	268	279	264	284	300	313	300	323	341	356	342	368	389	406	385	414	437	456	425	458	483	504
		Lo PR	113	120	131	140	119	127	139	148	124	132	144	154	130	139	152	161	137	145	159	169	141	150	164	175
	1138	MBh	37.9	38.6	40.5	43.2	37.0	37.7	39.5	42.2	36.2	36.9	38.6	41.2	35.3	36.0	37.7	40.2	33.5	34.2	35.8	38.2	31.0	31.6	33.1	35.4
		S/T	0.93	0.90	0.81	0.66	0.96	0.93	0.84	0.68	0.99	0.95	0.86	0.70	1.00	0.98	0.89	0.72	1.00	1.00	0.92	0.75	1.00	1.00	0.93	0.75
		ΔT	28	28	26	23	29	28	27	23	29	28	27	23	29	29	27	23	27	28	27	23	25	26	25	22
		kW	2.86	2.91	3.00	3.10	3.07	3.13	3.23	3.33	3.25	3.32	3.43	3.54	3.42	3.49	3.60	3.72	3.56	3.63	3.75	3.87	3.68	3.76	3.88	4.01
		Amps	13.5	13.8	14.1	14.5	14.4	14.6	15.0	15.4	15.3	15.6	16.0	16.5	16.2	16.5	16.9	17.4	17.0	17.3	17.8	18.4	17.8	18.2	18.7	19.3
		Hi PR	228	246	260	271	256	276	291	304	291	314	331	345	332	357	377	393	373	402	424	443	413	444	469	489
		Lo PR	110	117	127	136	116	123	135	143	120	128	140	149	127	135	147	157	133	141	154	164	137	146	159	170

IDB: Entering Indoor Dry Bulb Temperature

Shaded area reflects AHRI (TVA) conditions.

kW = Total system power

High and low pressures are measured at the liquid and suction access fittings.

Amps: Unit amps (comp.+ evaporator + condenser fan motors)

Expanded Cooling Data — GPG1461***41A* — High Stage

			Outdoor Ambient Temperature																							
			65				75				85				95				105				115			
			Entering Indoor Wet Bulb Temperature																							
IDB	Airflow		59	63	67	71	59	63	67	71	59	63	67	71	59	63	67	71	59	63	67	71	59	63	67	71
70	1965	MBh	55.9	57.9	63.4	-	54.6	56.5	62.0	-	53.3	55.2	60.5	-	52.0	53.9	59.0	-	49.4	51.2	56.1	-	45.7	47.4	51.9	-
		S/T	0.75	0.62	0.43	-	0.77	0.65	0.45	-	0.79	0.66	0.46	-	0.82	0.68	0.47	-	0.85	0.71	0.49	-	0.86	0.72	0.50	-
		ΔT	20	17	13	-	20	17	13	-	20	17	13	-	20	17	13	-	20	17	13	-	18	16	12	-
		kW	4.08	4.16	4.28	-	4.37	4.46	4.60	-	4.63	4.73	4.87	-	4.86	4.96	5.12	-	5.06	5.16	5.33	-	5.23	5.34	5.51	-
		Amps	20.5	20.8	21.3	-	21.7	22.1	22.6	-	23.1	23.5	24.1	-	24.3	24.8	25.4	-	25.5	26.0	26.7	-	26.7	27.3	28.0	-
		Hi PR	251	270	285	-	281	303	320	-	320	344	364	-	365	392	414	-	410	441	466	-	453	488	515	-
		Lo PR	109	116	126	-	115	122	133	-	119	127	139	-	125	133	146	-	131	140	152	-	136	144	158	-
	1750	MBh	54.2	56.2	61.6	-	53.0	54.9	60.1	-	51.7	53.6	58.7	-	50.4	52.3	57.3	-	47.9	49.7	54.4	-	44.4	46.0	50.4	-
		S/T	0.71	0.59	0.41	-	0.74	0.62	0.43	-	0.76	0.63	0.44	-	0.78	0.65	0.45	-	0.81	0.68	0.47	-	0.82	0.68	0.47	-
		ΔT	20	18	13	-	21	18	13	-	21	18	14	-	21	18	14	-	20	18	13	-	19	17	13	-
		kW	4.05	4.13	4.25	-	4.34	4.43	4.56	-	4.60	4.69	4.84	-	4.82	4.93	5.08	-	5.02	5.12	5.28	-	5.18	5.29	5.46	-
		Amps	20.3	20.7	21.2	-	21.5	21.9	22.5	-	22.9	23.4	24.0	-	24.1	24.6	25.2	-	25.4	25.8	26.5	-	26.5	27.1	27.8	-
		Hi PR	248	267	282	-	279	300	317	-	317	341	360	-	361	388	410	-	406	437	461	-	449	483	510	-
		Lo PR	108	114	125	-	114	121	132	-	118	126	137	-	124	132	144	-	130	138	151	-	134	143	156	-
	1535	MBh	50.1	51.9	56.8	-	48.9	50.7	55.5	-	47.7	49.5	54.2	-	46.6	48.3	52.9	-	44.2	45.8	50.2	-	41.0	42.5	46.5	-
		S/T	0.69	0.57	0.40	-	0.71	0.59	0.41	-	0.73	0.61	0.42	-	0.75	0.63	0.44	-	0.78	0.65	0.45	-	0.79	0.66	0.46	-
		ΔT	21	18	14	-	21	18	14	-	21	18	14	-	21	18	14	-	21	18	14	-	19	17	13	-
		kW	3.96	4.04	4.15	-	4.24	4.33	4.46	-	4.49	4.58	4.72	-	4.71	4.81	4.96	-	4.90	5.00	5.16	-	5.06	5.17	5.33	-
		Amps	19.9	20.3	20.8	-	21.1	21.5	22.0	-	22.5	22.9	23.4	-	23.6	24.1	24.7	-	24.8	25.3	25.9	-	26.0	26.5	27.2	-
		Hi PR	241	259	274	-	270	291	307	-	307	331	349	-	350	377	398	-	394	424	448	-	435	468	494	-
		Lo PR	104	111	121	-	110	117	128	-	115	122	133	-	120	128	140	-	126	134	146	-	130	139	151	-
75	1965	MBh	56.8	58.5	63.3	67.9	55.5	57.1	61.8	66.4	54.2	55.8	60.4	64.8	52.8	54.4	58.9	63.2	50.2	51.7	55.9	60.0	46.5	47.9	51.8	55.6
		S/T	0.85	0.76	0.57	0.37	0.88	0.79	0.60	0.38	0.90	0.81	0.61	0.39	0.93	0.83	0.63	0.41	0.97	0.86	0.65	0.42	0.97	0.87	0.66	0.42
		ΔT	23	21	17	12	23	21	17	12	23	21	17	12	23	21	17	12	23	21	17	12	21	20	16	11
		kW	4.11	4.19	4.32	4.45	4.41	4.50	4.63	4.78	4.67	4.77	4.91	5.07	4.90	5.00	5.16	5.33	5.10	5.21	5.37	5.54	5.27	5.38	5.55	5.73
		Amps	20.6	21.0	21.5	22.1	21.8	22.2	22.8	23.4	23.3	23.7	24.3	25.0	24.5	25.0	25.6	26.4	25.7	26.2	26.9	27.8	26.9	27.5	28.2	29.1
		Hi PR	253	273	288	300	284	306	323	337	323	348	367	383	368	396	418	436	414	446	471	491	458	493	520	543
		Lo PR	110	117	127	136	116	123	135	143	120	128	140	149	127	135	147	157	133	141	154	164	137	146	159	170
	1750	MBh	55.1	56.8	61.5	66.0	53.9	55.5	60.0	64.4	52.6	54.1	58.6	62.9	51.3	**52.8**	57.2	61.4	48.7	50.2	54.3	58.3	45.1	46.5	50.3	54.0
		S/T	0.81	0.72	0.55	0.35	0.84	0.75	0.57	0.37	0.86	0.77	0.58	0.37	0.89	**0.79**	0.60	0.39	0.92	0.82	0.62	0.40	0.93	0.83	0.63	0.40
		ΔT	23	22	18	12	24	22	18	12	24	22	18	12	24	**22**	18	12	24	22	18	12	22	20	17	11
		kW	4.08	4.16	4.28	4.41	4.37	4.46	4.60	4.74	4.63	4.73	4.88	5.03	4.86	**4.96**	5.12	5.28	5.06	5.16	5.33	5.50	5.23	5.34	5.51	5.69
		Amps	20.5	20.8	21.3	21.9	21.7	22.1	22.6	23.3	23.1	23.5	24.1	24.8	24.3	**24.8**	25.4	26.2	25.5	26.0	26.7	27.5	26.7	27.3	28.0	28.9
		Hi PR	251	270	285	297	281	303	320	334	320	344	364	379	365	**392**	414	432	410	441	466	486	453	488	515	537
		Lo PR	109	116	126	134	115	122	133	142	119	127	139	148	125	**133**	146	155	131	140	153	162	136	145	158	168
	1535	MBh	50.9	52.4	56.7	60.9	49.7	51.2	55.4	59.5	48.5	50.0	54.1	58.1	47.3	48.8	52.8	56.6	45.0	46.3	50.1	53.8	41.7	42.9	46.4	49.8
		S/T	0.78	0.70	0.53	0.34	0.81	0.72	0.55	0.35	0.83	0.74	0.56	0.36	0.86	0.77	0.58	0.37	0.89	0.79	0.60	0.39	0.90	0.80	0.61	0.39
		ΔT	24	22	18	12	24	22	18	13	24	22	18	13	24	22	18	13	24	22	18	12	22	21	17	12
		kW	3.99	4.07	4.19	4.31	4.27	4.36	4.49	4.63	4.53	4.62	4.76	4.91	4.75	4.85	5.00	5.16	4.94	5.04	5.20	5.37	5.10	5.21	5.37	5.55
		Amps	20.1	20.4	20.9	21.5	21.2	21.6	22.2	22.8	22.6	23.0	23.6	24.3	23.8	24.2	24.9	25.6	25.0	25.5	26.1	26.9	26.1	26.7	27.4	28.2
		Hi PR	243	262	276	288	273	294	310	324	311	334	353	368	354	381	402	419	398	428	452	472	440	473	500	521
		Lo PR	105	112	122	130	111	118	129	138	116	123	134	143	122	129	141	150	127	136	148	158	132	140	153	163

IDB: Entering Indoor Dry Bulb Temperature

Shaded area reflects ACCA (TVA) conditions.

kW = Total system power

High and low pressures are measured at the liquid and suction access fittings.

Amps: Unit amps (comp.+ evaporator + condenser fan motors)

Design Subcooling, 11±3 °F @ the liquid access fitting connection AHRI 95 test conditions. Design Superheat 11±2 °F @ the compressor suction access fitting connection.

Expanded Cooling Data — GPG1461***41A* — High Stage (cont.)

			Outdoor Ambient Temperature																							
			65				75				85				95				105				115			
			Entering Indoor Wet Bulb Temperature																							
IDB	Airflow		59	63	67	71	59	63	67	71	59	63	67	71	59	63	67	71	59	63	67	71	59	63	67	71
80	1965	MBh	57.8	59.1	63.1	67.5	56.5	57.7	61.6	65.9	55.1	56.3	60.2	64.3	53.8	55.0	58.7	62.8	51.1	52.2	55.8	59.6	47.3	48.4	51.7	55.2
		S/T	0.93	0.87	0.71	0.53	0.96	0.90	0.74	0.55	1.00	0.93	0.76	0.56	1.00	0.96	0.78	0.58	1.00	1.00	0.81	0.60	1.00	1.00	0.82	0.61
		ΔT	25	24	21	17	25	24	21	17	26	24	21	17	25	25	21	17	24	24	21	17	22	23	20	16
		kW	4.14	4.22	4.35	4.48	4.44	4.53	4.67	4.81	4.71	4.80	4.95	5.11	4.94	5.04	5.20	5.37	5.14	5.25	5.41	5.59	5.31	5.42	5.60	5.78
		Amps	20.7	21.1	21.6	22.2	22.0	22.4	23.0	23.6	23.4	23.9	24.5	25.2	24.7	25.1	25.8	26.6	25.9	26.4	27.1	28.0	27.1	27.7	28.4	29.3
		Hi PR	256	275	291	303	287	309	326	340	327	351	371	387	372	400	423	441	418	450	476	496	462	498	525	548
		Lo PR	111	118	129	137	117	125	136	145	122	129	141	151	128	136	148	158	134	143	156	166	139	147	161	171
	1750	MBh	56.1	57.4	61.3	65.5	54.8	56.0	59.9	64.0	53.5	54.7	58.4	62.5	52.2	53.4	**57.0**	60.9	49.6	50.7	54.2	57.9	45.9	46.9	50.2	53.6
		S/T	0.89	0.83	0.68	0.51	0.92	0.86	0.70	0.52	0.94	0.88	0.72	0.54	0.97	0.91	**0.74**	0.56	1.00	0.95	0.77	0.58	1.00	0.96	0.78	0.58
		ΔT	26	25	22	17	26	25	22	18	27	25	22	18	27	26	**22**	18	26	25	22	18	24	24	20	16
		kW	4.11	4.19	4.32	4.45	4.41	4.50	4.63	4.78	4.67	4.77	4.91	5.07	4.90	5.00	**5.16**	5.33	5.10	5.21	5.37	5.54	5.27	5.38	5.55	5.73
		Amps	20.6	21.0	21.5	22.1	21.8	22.2	22.8	23.4	23.3	23.7	24.3	25.0	24.5	25.0	**25.6**	26.4	25.7	26.2	26.9	27.8	26.9	27.5	28.2	29.1
		Hi PR	253	273	288	300	284	306	323	337	323	348	367	383	368	396	**419**	436	414	446	471	491	458	493	520	543
		Lo PR	110	117	127	136	116	123	135	143	120	128	140	149	127	135	**147**	157	133	141	154	164	137	146	159	170
	1535	MBh	51.8	52.9	56.6	60.5	50.6	51.7	55.2	59.1	49.4	50.5	53.9	57.6	48.2	49.2	52.6	56.2	45.8	46.8	50.0	53.4	42.4	43.3	46.3	49.5
		S/T	0.86	0.80	0.65	0.49	0.89	0.83	0.68	0.51	0.91	0.85	0.69	0.52	0.94	0.88	0.72	0.54	0.97	0.91	0.74	0.56	0.98	0.92	0.75	0.56
		ΔT	27	25	22	18	27	26	22	18	27	26	22	18	27	26	23	18	27	26	22	18	25	24	21	17
		kW	4.02	4.10	4.22	4.35	4.31	4.39	4.53	4.67	4.56	4.65	4.80	4.95	4.79	4.89	5.04	5.20	4.98	5.08	5.24	5.41	5.14	5.25	5.42	5.59
		Amps	20.2	20.5	21.0	21.6	21.4	21.8	22.3	22.9	22.8	23.2	23.8	24.5	24.0	24.4	25.1	25.8	25.2	25.6	26.3	27.1	26.3	26.9	27.6	28.4
		Hi PR	246	264	279	291	276	297	313	327	314	338	356	372	357	384	406	423	402	432	457	476	444	478	505	526
		Lo PR	106	113	124	132	112	120	131	139	117	124	136	145	123	131	143	152	129	137	149	159	133	142	155	165
85	1965	MBh	58.8	60.0	62.8	67.0	57.5	58.6	61.3	65.4	56.1	57.2	59.9	63.9	54.7	55.8	58.4	62.3	52.0	53.0	55.5	59.2	48.2	49.1	51.4	54.8
		S/T	0.98	0.94	0.85	0.69	1.00	0.98	0.88	0.71	1.00	1.00	0.90	0.73	1.00	1.00	0.93	0.76	1.00	1.00	0.97	0.78	1.00	1.00	0.98	0.79
		ΔT	27	26	25	22	27	27	25	22	26	27	25	22	26	26	25	22	24	25	25	22	23	23	23	20
		kW	4.17	4.26	4.38	4.52	4.47	4.57	4.71	4.85	4.74	4.84	4.99	5.15	4.98	5.08	5.24	5.41	5.18	5.29	5.46	5.63	5.35	5.47	5.64	5.83
		Amps	20.9	21.3	21.8	22.4	22.1	22.5	23.1	23.8	23.6	24.0	24.7	25.4	24.8	25.3	26.0	26.8	26.1	26.6	27.3	28.2	27.3	27.9	28.7	29.5
		Hi PR	258	278	294	306	290	312	330	344	330	355	375	391	376	404	427	445	423	455	480	501	467	503	531	553
		Lo PR	112	119	130	138	118	126	137	146	123	131	143	152	129	137	150	160	135	144	157	167	140	149	163	173
	1750	MBh	57.1	58.2	61.0	65.0	55.8	56.9	59.6	63.5	54.5	55.5	58.1	62.0	53.1	54.2	56.7	60.5	50.5	51.4	53.9	57.5	46.7	47.7	49.9	53.2
		S/T	0.93	0.90	0.81	0.66	0.96	0.93	0.84	0.68	0.99	0.95	0.86	0.70	1.00	0.98	0.89	0.72	1.00	1.00	0.92	0.75	1.00	1.00	0.93	0.75
		ΔT	28	27	26	22	28	28	26	23	28	28	26	23	28	28	26	23	27	27	26	23	25	25	24	21
		kW	4.14	4.22	4.35	4.48	4.44	4.53	4.67	4.81	4.71	4.80	4.95	5.11	4.94	5.04	5.20	5.37	5.14	5.25	5.41	5.59	5.31	5.42	5.60	5.78
		Amps	20.7	21.1	21.6	22.2	22.0	22.4	23.0	23.6	23.4	23.9	24.5	25.2	24.7	25.1	25.8	26.6	25.9	26.4	27.1	28.0	27.1	27.7	28.4	29.3
		Hi PR	256	275	291	303	287	309	326	340	327	351	371	387	372	400	423	441	418	450	476	496	462	498	525	548
		Lo PR	111	118	129	137	117	125	136	145	122	129	141	151	128	136	148	158	134	143	156	166	139	147	161	171
	1535	MBh	52.7	53.7	56.3	60.0	51.5	52.5	55.0	58.6	50.3	51.2	53.7	57.2	49.0	50.0	52.3	55.8	46.6	47.5	49.7	53.1	43.1	44.0	46.1	49.1
		S/T	0.90	0.87	0.78	0.63	0.93	0.90	0.81	0.66	0.95	0.92	0.83	0.67	0.98	0.95	0.86	0.70	1.00	0.99	0.89	0.72	1.00	0.99	0.90	0.73
		ΔT	28	28	26	23	29	28	27	23	29	28	27	23	29	28	27	23	28	28	26	23	26	26	25	21
		kW	4.05	4.13	4.25	4.38	4.34	4.43	4.56	4.70	4.60	4.69	4.84	4.99	4.82	4.92	5.08	5.24	5.02	5.12	5.28	5.45	5.18	5.29	5.46	5.64
		Amps	20.3	20.7	21.2	21.8	21.5	21.9	22.5	23.1	22.9	23.4	24.0	24.7	24.1	24.6	25.2	26.0	25.3	25.8	26.5	27.3	26.5	27.1	27.8	28.6
		Hi PR	248	267	282	294	279	300	317	330	317	341	360	375	361	388	410	428	406	437	461	481	448	483	510	532
		Lo PR	108	114	125	133	114	121	132	140	118	126	137	146	124	132	144	153	130	138	151	161	134	143	156	166

IDB: Entering Indoor Dry Bulb Temperature

Shaded area reflects AHRI (TVA) conditions.

kW = Total system power

High and low pressures are measured at the liquid and suction access fittings.

Amps: Unit amps (comp.+ evaporator + condenser fan motors)

Design Subcooling, 11±3 °F @ the liquid access fitting connection AHRI 95 test conditions. Design Superheat 11±2 °F @ the compressor suction access fitting connection.

GPG1424040M41 - Rise Range: 25° - 55°**

E.S.P.	T1 Heating Speed			T2 Heating Speed			T3 Heating Speed			T4 Cooling Speed		T5 Cooling Speed	
	Cfm	Watts	Rise	Cfm	Watts	Rise	Cfm	Watts	Rise	Cfm	Watts	Cfm	Watts
0.1	695	62	44	820	93	37	1,050	167	29	850	100	1,095	198
0.2	650	71	47	785	100	39	1,010	180	30	800	106	1,060	202
0.3	605	77	51	745	108	41	970	186	32	765	116	1,025	214
0.4	565	89	54	700	117	44	935	192	33	730	125	985	217
0.5	480	99	X	665	127	46	890	203	35	680	131	945	227
0.6	415	106	X	575	138	53	850	208	36	610	141	905	233
0.7	365	110	X	510	146	X	815	216	38	550	153	865	237
0.8	320	119	X	455	155	X	755	222	41	490	159	825	246

GPG1424060M41 - Rise Range: 30° - 60°**

E.S.P.	T1 Heating Speed			T2 Heating Speed			T3 Heating Speed			T4 Cooling Speed		T5 Cooling Speed	
	Cfm	Watts	Rise	Cfm	Watts	Rise	Cfm	Watts	Rise	Cfm	Watts	Cfm	Watts
0.1	695	62	X	820	93	56	1,050	167	44	850	100	1,095	198
0.2	650	71	X	785	100	59	1,010	180	46	800	106	1,060	202
0.3	605	77	X	745	108	X	970	186	48	765	116	1,025	214
0.4	565	89	X	700	117	X	935	192	49	730	125	985	217
0.5	480	99	X	665	127	X	890	203	52	680	131	945	227
0.6	415	106	X	575	138	X	850	208	54	610	141	905	233
0.7	365	110	X	510	146	X	815	216	57	550	153	865	237
0.8	320	119	X	455	155	X	755	222	X	490	159	825	246

GPG1430040M41 - Rise Range: 25° - 55°**

E.S.P.	T1 Heating Speed			T2 Heating Speed			T3 Heating Speed			T4 Cooling Speed		T5 Cooling Speed	
	Cfm	Watts	Rise	Cfm	Watts	Rise	Cfm	Watts	Rise	Cfm	Watts	Cfm	Watts
0.1	680	61	45	840	103	37	1,035	174	30	1,035	174	1,225	276
0.2	640	72	48	795	109	39	995	184	31	995	184	1,185	275
0.3	605	80	51	750	117	41	960	192	32	960	192	1,150	289
0.4	555	89	X	710	126	43	925	205	33	925	205	1,115	296
0.5	490	93	X	660	132	47	875	200	35	875	200	1,085	303
0.6	455	107	X	615	138	50	840	217	37	840	217	1,045	312
0.7	395	109	X	570	150	54	795	222	39	795	222	1,000	315
0.8	350	119	X	515	157	X	755	226	41	755	226	960	320

GPG1430060M41 - Rise Range: 30° - 60°**

E.S.P.	T1 Heating Speed			T2 Heating Speed			T3 Heating Speed			T4 Cooling Speed		T5 Cooling Speed	
	Cfm	Watts	Rise	Cfm	Watts	Rise	Cfm	Watts	Rise	Cfm	Watts	Cfm	Watts
0.1	680	61	X	840	103	55	1,035	174	45	1,035	174	1,225	276
0.2	640	72	X	795	109	58	995	184	46	995	184	1,185	275
0.3	605	80	X	750	117	X	960	192	48	960	192	1,150	289
0.4	555	89	X	710	126	X	925	205	50	925	205	1,115	296
0.5	490	93	X	660	132	X	875	200	53	875	200	1,085	303
0.6	455	107	X	615	138	X	840	217	55	840	217	1,045	312
0.7	395	109	X	570	150	X	795	222	58	795	222	1,000	315
0.8	350	119	X	515	157	X	755	226	X	755	226	960	320

GPG1436040M41 - Rise Range: 25° - 55°**

E.S.P.	T1 Heating Speed			T2 Heating Speed			T3 Heating Speed			T4 Cooling Speed		T5 Cooling Speed	
	Cfm	Watts	Rise	Cfm	Watts	Rise	Cfm	Watts	Rise	Cfm	Watts	Cfm	Watts
0.1	745	76	41	1,115	206	28	1,265	285	X	1,305	311	1,440	426
0.2	690	84	45	1,075	215	29	1,230	290	X	1,265	320	1,390	428
0.3	635	91	48	1,030	221	30	1,175	300	26	1,225	325	1,365	440
0.4	570	98	54	985	233	31	1,140	303	27	1,180	334	1,335	440
0.5	505	107	X	940	234	33	1,100	311	28	1,140	338	1,295	456
0.6	450	115	X	895	242	34	1,055	319	29	1,095	349	1,255	456
0.7	395	118	X	845	248	36	1,010	326	30	1,050	350	1,220	465
0.8	345	126	X	785	252	39	960	335	32	1,010	357	1,180	468

GPG1436060M41 - Rise Range: 30° - 60°**

E.S.P.	T1 Heating Speed			T2 Heating Speed			T3 Heating Speed			T4 Cooling Speed		T5 Cooling Speed	
	Cfm	Watts	Rise	Cfm	Watts	Rise	Cfm	Watts	Rise	Cfm	Watts	Cfm	Watts
0.1	745	76	X	1,115	206	41	1,265	285	36	1,305	311	1,440	426
0.2	690	84	X	1,075	215	43	1,230	290	37	1,265	320	1,390	428
0.3	635	91	X	1,030	221	45	1,175	300	39	1,225	325	1,365	440
0.4	570	98	X	985	233	47	1,140	303	40	1,180	334	1,335	440
0.5	505	107	X	940	234	49	1,100	311	42	1,140	338	1,295	456
0.6	450	115	X	895	242	52	1,055	319	44	1,095	349	1,255	456
0.7	395	118	X	845	248	55	1,010	326	46	1,050	350	1,220	465
0.8	345	126	X	785	252	59	960	335	48	1,010	357	1,180	468

GPG1436080M41 - Rise Range: 30° - 60°**

E.S.P.	T1 Heating Speed			T2 Heating Speed			T3 Heating Speed			T4 Cooling Speed		T5 Cooling Speed	
	Cfm	Watts	Rise	Cfm	Watts	Rise	Cfm	Watts	Rise	Cfm	Watts	Cfm	Watts
0.1	745	76	X	1,115	206	55	1,265	285	49	1,305	311	1,440	426
0.2	690	84	X	1,075	215	57	1,230	290	50	1,265	320	1,390	428
0.3	635	91	X	1,030	221	60	1,175	300	52	1,225	325	1,365	440
0.4	570	98	X	985	233	X	1,140	303	54	1,180	334	1,335	440
0.5	505	107	X	940	234	X	1,100	311	56	1,140	338	1,295	456
0.6	450	115	X	895	242	X	1,055	319	58	1,095	349	1,255	456
0.7	395	118	X	845	248	X	1,010	326	X	1,050	350	1,220	465
0.8	345	126	X	785	252	X	960	335	X	1,010	357	1,180	468

GPG1442060M41 - Rise Range: 30° - 60°**

E.S.P.	T1 Heating Speed			T2 Heating Speed			T3 Heating Speed			T4 Cooling Speed		T5 Cooling Speed	
	Cfm	Watts	Rise	Cfm	Watts	Rise	Cfm	Watts	Rise	Cfm	Watts	Cfm	Watts
0.1	830	99	56	1,185	228	39	1,335	317	35	1,335	320	1,630	556
0.2	785	106	59	1,140	232	40	1,300	325	35	1,305	331	1,595	561
0.3	730	116	X	1,100	247	42	1,265	331	36	1,265	343	1,555	566
0.4	675	122	X	1,060	253	44	1,215	338	38	1,225	343	1,520	571
0.5	630	129	X	1,020	258	45	1,170	346	39	1,190	343	1,485	568
0.6	575	138	X	975	267	47	1,135	351	41	1,135	351	1,450	576
0.7	520	144	X	900	274	51	1,085	354	42	1,095	358	1,410	579
0.8	440	150	X	855	282	54	1,025	361	45	1,040	367	1,370	590

GPG1442080M41 - Rise Range: 30° - 60°**

E.S.P.	T1 Heating Speed			T2 Heating Speed			T3 Heating Speed			T4 Cooling Speed		T5 Cooling Speed	
	Cfm	Watts	Rise	Cfm	Watts	Rise	Cfm	Watts	Rise	Cfm	Watts	Cfm	Watts
0.1	830	99	X	1,185	228	52	1,335	317	46	1,335	320	1,630	556
0.2	785	106	X	1,140	232	54	1,300	325	47	1,305	331	1,595	561
0.3	730	116	X	1,100	247	56	1,265	331	49	1,265	343	1,555	566
0.4	675	122	X	1,060	253	58	1,215	338	51	1,225	343	1,520	571
0.5	630	129	X	1,020	258	X	1,170	346	53	1,190	343	1,485	568
0.6	575	138	X	975	267	X	1,135	351	54	1,135	351	1,450	576
0.7	520	144	X	900	274	X	1,085	354	57	1,095	358	1,410	579
0.8	440	150	X	855	282	X	1,025	361	60	1,040	367	1,370	590

GPG1448060M41 - Rise Range: 30° - 60°**

E.S.P.	T1 Heating Speed			T2 Heating Speed			T3 Heating Speed			T4 Cooling Speed		T5 Cooling Speed	
	Cfm	Watts	Rise	Cfm	Watts	Rise	Cfm	Watts	Rise	Cfm	Watts	Cfm	Watts
0.1	1,055	156	44	1,380	298	33	1,415	327	33	1,570	447	1,780	647
0.2	1,000	166	46	1,320	312	35	1,360	335	34	1,520	452	1,740	658
0.3	940	173	49	1,270	318	36	1,305	343	35	1,480	468	1,695	661
0.4	880	181	52	1,220	327	38	1,260	353	37	1,425	479	1,640	679
0.5	825	189	56	1,160	336	40	1,200	359	38	1,380	479	1,595	675
0.6	760	204	X	1,115	342	41	1,150	371	40	1,335	485	1,550	693
0.7	705	207	X	1,060	347	44	1,110	375	42	1,285	491	1,505	690
0.8	625	210	X	1,000	361	46	1,060	381	44	1,235	501	1,465	696

GPG1448080M41 - Rise Range: 30° - 60°**

E.S.P.	T1 Heating Speed			T2 Heating Speed			T3 Heating Speed			T4 Cooling Speed		T5 Cooling Speed	
	Cfm	Watts	Rise	Cfm	Watts	Rise	Cfm	Watts	Rise	Cfm	Watts	Cfm	Watts
0.1	1,055	156	58	1,380	298	45	1,415	327	43	1,570	447	1,780	647
0.2	1,000	166	X	1,320	312	47	1,360	335	45	1,520	452	1,740	658
0.3	940	173	X	1,270	318	48	1,305	343	47	1,480	468	1,695	661
0.4	880	181	X	1,220	327	50	1,260	353	49	1,425	479	1,640	679
0.5	825	189	X	1,160	336	53	1,200	359	51	1,380	479	1,595	675
0.6	760	204	X	1,115	342	55	1,150	371	53	1,335	485	1,550	693
0.7	705	207	X	1,060	347	58	1,110	375	55	1,285	491	1,505	690
0.8	625	210	X	1,000	361	X	1,060	381	58	1,235	501	1,465	696

GPG1448100M41 - Rise Range: 35° - 65°**

E.S.P.	T1 Heating Speed			T2 Heating Speed			T3 Heating Speed			T4 Cooling Speed		T5 Cooling Speed	
	Cfm	Watts	Rise	Cfm	Watts	Rise	Cfm	Watts	Rise	Cfm	Watts	Cfm	Watts
0.1	1,055	156	X	1,380	298	56	1,570	327	49	1,570	447	1,780	647
0.2	1,000	166	X	1,320	312	58	1,520	335	51	1,520	452	1,740	658
0.3	940	173	X	1,270	318	61	1,480	343	52	1,480	468	1,695	661
0.4	880	181	X	1,220	327	63	1,425	353	54	1,425	479	1,640	679
0.5	825	189	X	1,160	336	X	1,380	359	56	1,380	479	1,595	675
0.6	760	204	X	1,115	342	X	1,335	371	58	1,335	485	1,550	693
0.7	705	207	X	1,060	347	X	1,285	375	60	1,285	491	1,505	690
0.8	625	210	X	1,000	361	X	1,235	381	62	1,235	501	1,465	696

GPG1460080M41 - Rise Range: 30° - 60°**

E.S.P.	T1 Low-Stage Heating Speed			T2 High-Stage Heating Speed			T3 Low-Stage Cooling		T4 High-Stage Cooling		T5 Cooling Speed	
	Cfm	Watts	Rise	Cfm	Watts	Rise	Cfm	Watts	Cfm	Watts	Cfm	Watts
0.1	1,285	252	36	1,370	297	45	1,340	276	1780	620	1,940	844
0.2	1,235	259	37	1,330	304	46	1,270	279	1745	646	1,910	834
0.3	1,180	272	39	1,280	314	48	1,235	292	1700	640	1,880	840
0.4	1,130	272	41	1,220	321	50	1,175	296	1655	638	1,825	857
0.5	1,085	280	42	1,180	341	52	1,135	308	1610	656	1,790	865
0.6	1,035	294	45	1,135	339	54	1,085	318	1560	659	1,735	867
0.7	975	297	47	1,085	347	57	1,040	328	1520	664	1,700	877
0.8	910	319	51	1,035	359	59	975	337	1475	675	1,660	886

GPG1460100M41 - Rise Range: 35° - 65°**

E.S.P.	T1 Low-Stage Heating Speed			T2 High-Stage Heating Speed			T3 Low-Stage Cooling		T4 High-Stage Cooling		T5 Cooling Speed	
	Cfm	Watts	Rise	Cfm	Watts	Rise	Cfm	Watts	Cfm	Watts	Cfm	Watts
0.1	1,175	169	49	1,485	311	52	1,340	276	1780	620	1,940	844
0.2	1,115	178	52	1,425	317	54	1,270	279	1745	646	1,910	834
0.3	1,045	183	55	1,385	331	55	1,235	292	1700	640	1,880	840
0.4	985	194	59	1,350	341	57	1,175	296	1655	638	1,825	857
0.5	905	199	64	1,295	351	59	1,135	308	1610	656	1,790	865
0.6	840	215	X	1,235	359	62	1,085	318	1560	659	1,735	867
0.7	770	218	X	1,180	371	X	1,040	328	1520	664	1,700	877
0.8	700	229	X	1,125	386	X	975	337	1475	675	1,660	886

GPG1460120M41 - Rise Range: 35° - 65°**

E.S.P.	T1 Low-Stage Heating Speed			T2 High-Stage Heating Speed			T3 Low-Stage Cooling		T4 High-Stage Cooling		T5 Cooling Speed	
	Cfm	Watts	Rise	Cfm	Watts	Rise	Cfm	Watts	Cfm	Watts	Cfm	Watts
0.1	1,345	281	51	1,745	558	53	1,340	276	1780	620	1,940	844
0.2	1,300	286	53	1,705	567	54	1,270	279	1745	646	1,910	834
0.3	1,255	295	55	1,660	572	56	1,235	292	1700	640	1,880	840
0.4	1,205	308	57	1,620	582	57	1,175	296	1655	638	1,825	857
0.5	1,165	322	59	1,580	589	58	1,135	308	1610	656	1,790	865
0.6	1,110	335	62	1,535	604	60	1,085	318	1560	659	1,735	867
0.7	1,055	334	X	1,485	613	62	1,040	328	1520	664	1,700	877
0.8	1,010	346	X	1,435	606	64	975	337	1475	675	1,660	886

GPG1461080M41 - Rise Range: 30° - 60°**

ESP	T1 Low-Stage Heating			T2 High-Stage Heating			T3 Low-Stage Cooling		T4 High-Stage Cooling		T5 Cooling Speed	
	CFM	Watts	RISE	CFM	Watts	RISE	CFM	Watts	CFM	Watts	CFM	Watts
0.1	1,285	252	36	1,370	297	45	1,340	276	1780	620	1,940	844
0.2	1,235	259	37	1,330	304	46	1,270	279	1745	646	1,910	834
0.3	1,180	272	39	1,280	314	48	1,235	292	1700	640	1,880	840
0.4	1,130	272	41	1,220	321	50	1,175	296	1655	638	1,825	857
0.5	1,085	280	42	1,180	341	52	1,135	308	1610	656	1,790	865
0.6	1,035	294	45	1,135	339	54	1,085	318	1560	659	1,735	867
0.7	975	297	47	1,085	347	57	1,040	328	1520	664	1,700	877
0.8	910	319	51	1,035	359	59	975	337	1475	675	1,660	886

GPG1461100M41 - Rise Range: 35° - 65°**

ESP	T1 Low-Stage Heating			T2 High-Stage Heating			T3 Low-Stage Cooling		T4 High-Stage Cooling		T5 Cooling Speed	
	CFM	Watts	RISE	CFM	Watts	RISE	CFM	Watts	CFM	Watts	CFM	Watts
0.1	1,175	169	49	1,485	311	52	1,340	276	1780	620	1,940	844
0.2	1,115	178	52	1,425	317	54	1,270	279	1745	646	1,910	834
0.3	1,045	183	55	1,385	331	55	1,235	292	1700	640	1,880	840
0.4	985	194	59	1,350	341	57	1,175	296	1655	638	1,825	857
0.5	905	199	64	1,295	351	59	1,135	308	1610	656	1,790	865
0.6	840	215	X	1,235	359	62	1,085	318	1560	659	1,735	867
0.7	770	218	X	1,180	371	X	1,040	328	1520	664	1,700	877
0.8	700	229	X	1,125	386	X	975	337	1475	675	1,660	886

GPG1461120M41 - Rise Range: 35° - 65°**

ESP	T1 Low-Stage Heating			T2 High-Stage Heating			T3 Low-Stage Cooling		T4 High-Stage Cooling		T5 Cooling Speed	
	CFM	Watts	RISE	CFM	Watts	RISE	CFM	Watts	CFM	Watts	CFM	Watts
0.1	1,345	281	51	1,745	558	53	1,340	276	1780	620	1,940	844
0.2	1,300	286	53	1,705	567	54	1,270	279	1745	646	1,910	834
0.3	1,255	295	55	1,660	572	56	1,235	292	1700	640	1,880	840
0.4	1,205	308	57	1,620	582	57	1,175	296	1655	638	1,825	857
0.5	1,165	322	59	1,580	589	58	1,135	308	1610	656	1,790	865
0.6	1,110	335	62	1,535	604	60	1,085	318	1560	659	1,735	867
0.7	1,055	334	X	1,485	613	62	1,040	328	1520	664	1,700	877
0.8	1,010	346	X	1,435	606	64	975	337	1475	675	1,660	886

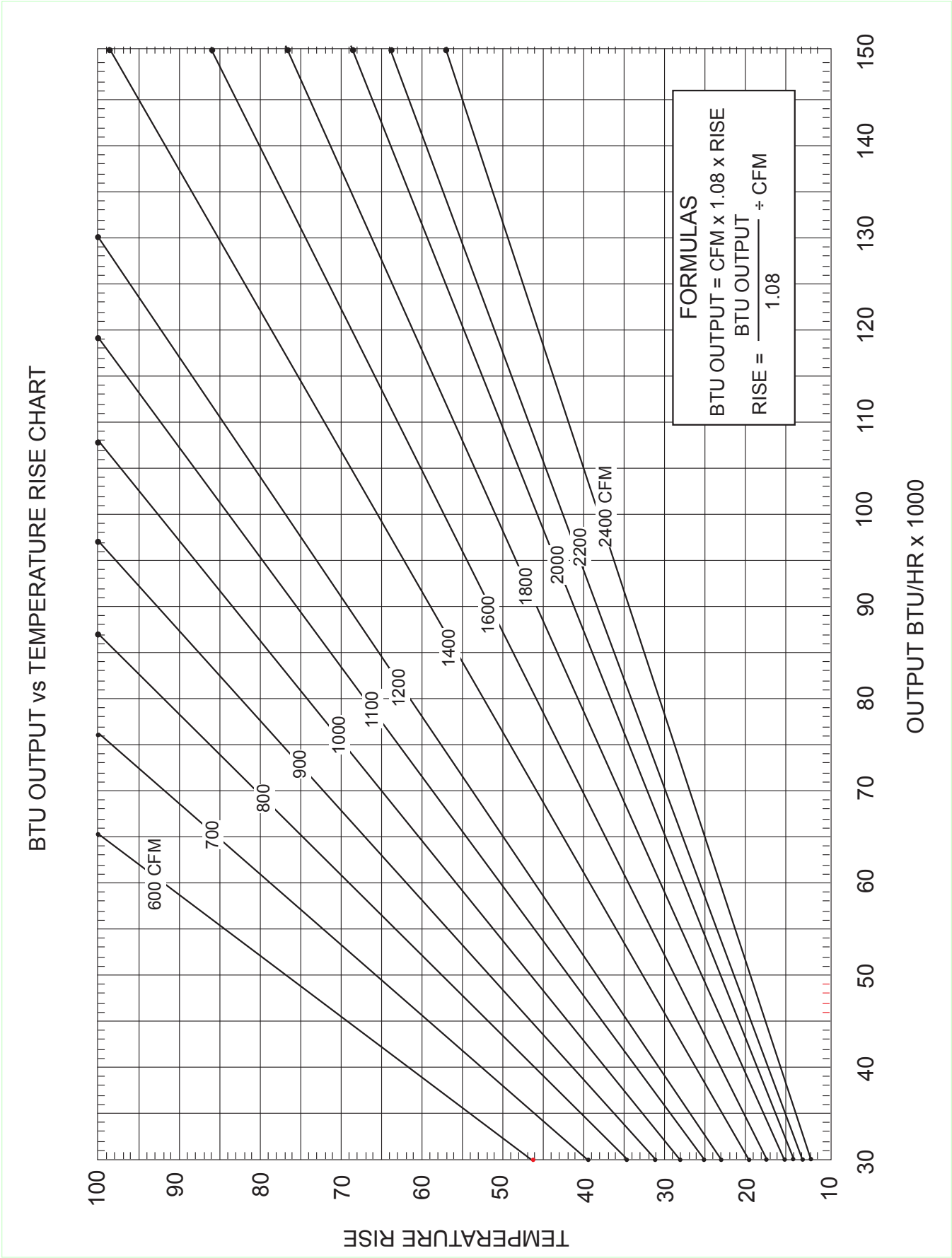
BTU OUTPUT vs TEMPERATURE RISE CHART
TEMPERATURE RISE
OUTPUT BTU/HR x 1000
600 CFM
700
800
900
1000
1100
1200
1400
1600
1800
2000
2200
2400 CFM
FORMULAS
BTU OUTPUT = CFM x 1.08 x RISE
RISE = BTU OUTPUT / 1.08 ÷ CFM

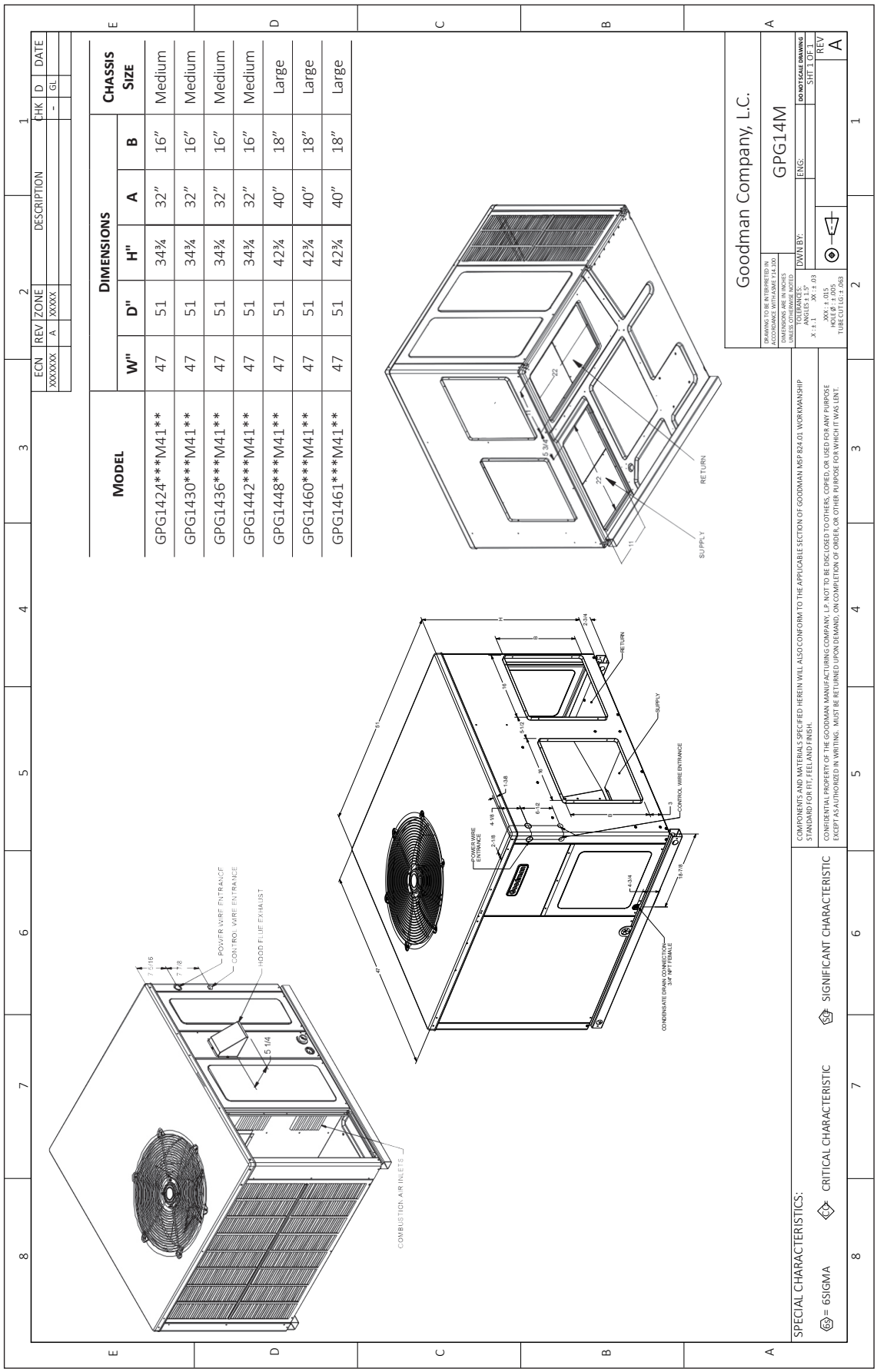

Model	Dimensions W"	D"	H"	A	B	Chassis Size
GPG1424***M41**	47	51	34¾	32"	16"	Medium
GPG1430***M41**	47	51	34¾	32"	16"	Medium
GPG1436***M41**	47	51	34¾	32"	16"	Medium
GPG1442***M41**	47	51	34¾	32"	16"	Medium
GPG1448***M41**	47	51	42¾	40"	18"	Large
GPG1460***M41**	47	51	42¾	40"	18"	Large
GPG1461***M41**	47	51	42¾	40"	18"	Large

COMPONENT LEGEND

ALS	AUXILARY LIMIT SWITCH
C	CONTACTOR
CH	CRANKCASE HEATER
CM	CONDENSER MOTOR
COMP	COMPRESSOR
EM	EVAPORATOR MOTOR
F	FUSE
FS	FLAME SENSOR
GND	EQUIPMENT GROUND
GV	GAS VALVE
HPS	HIGH PRESSURE SWITCH
IIC	INTEGRATED IGNITION CONTROL
IGN	IGNITOR
LS	LIMIT SWITCH
PLF-A	FEMALE PLUG/CONNECTOR ALS
PLM-A	FEMALE PLUG/CONNECTOR ALS
PS	PRESSURE SWITCH
RCCF	RUN CAPACITOR FOR COMPRESSOR/FAN
RS	ROLLOUT SWITCH
TR	TRANSFORMER
VM	VENT MOTOR
VMR	VENT MOTOR RELAY

WIRING

▬	HIGH VOLTAGE
▬	LOW VOLTAGE
▬	FIELD INSTALLED POWER
▬	FIELD INSTALLED CONTROL
▬	OPTIONAL HIGH VOLTAGE
▬	OPTIONAL LOW VOLTAGE

WIRE CODE

BK	BLACK
BL	BLUE
BR	BROWN
GR	GREEN
OR	ORANGE
PK	PINK
PU	PURPLE
RD	RED
WH	WHITE
YL	YELLOW
BL/PK	BLUE/PINK

NOTES :

1. REPLACEMENT WIRE MUST BE THE SAME SIZE AND TYPE OF INSULATION AS ORIGINAL (USE COPPER CONDUCTOR ONLY).
2. FOR 208 VOLT TRANSFORMER OPERATION MOVE BLACK WIRE FROM TERMINAL (3) TO TERMINAL (2) ON TRANSFORMER.
3. CRANKCASE HEATER NOT SUPPLIED ON ALL UNITS.
4. FOR DIFFERENT THAN FACTORY SPEED TAP, CHANGE COOLING SPEED AT MOTOR T4, T5 TERMINALS. CHANGE HEATING SPEED AT MOTOR T1, T2 AND T3 TERMINALS.

COOLING SPEED (YELLOW WIRE)	HEATING SPEED (WHITE WIRE)
T4 - LOW SPEED	T1 - LOW SPEED
T5 - HIGH SPEED	T2 - MED. SPEED
	T3 - HIGH SPEED

5. USE COOPER CONDUCTORS ONLY
6. L1 AND L2 ON IIC CONTROL IS 24V INPUT.

†† USE: NEC CLASS 2 WIRE.

208-230/1/60

THERMOSTAT FIELD WIRING ††

NO ECONOMIZER

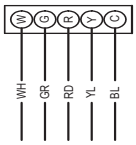

014G0340-A

INSTALLER/SERVICEMAN

THE STATUS LIGHT ON THE FURNACE CONTROL MAY BE USED AS A GUIDE TO TROUBLESHOOTING THIS APPLIANCE. STATUS LIGHT CODES ARE AS FOLLOWS:

STATUS LIGHT	EQUIP. STATUS	CHECK
ON	NORMAL OPERATION	-
OFF	NO POWER OR INTERNAL CONTROL FAULT	CHECK INPUT POWER CHECK FUSE ON CONTROL REPLACE CONTROL
1 BLINK	IGNITION FAILURE OR OPEN ROLLOUT SWITCH OR OPEN AUX. LIMIT SWITCH	GAS FLOW GAS PRESSURE GAS VALVE FLAME SENSOR FLAME ROLLOUT BAD SWITCH AUX. LIMIT OPEN
2 BLINKS	PRESSURE SWITCH OPEN	CHECK PRESSURE SWITCH
3 BLINKS	PRESSURE SWITCH CLOSED WITHOUT INDUCER ON	CHECK PRESSURE SWITCH
4 BLINKS	OPEN LIMIT SWITCH	MAIN LIMIT OPEN BAD SWITCH
5 BLINKS	FALSE FLAME SENSED	STICKING GAS VALVE
6 BLINKS	COMPRESSOR OUTPUT DELAY	3 MIN. COMP. ANTI-CYCLE TIMER

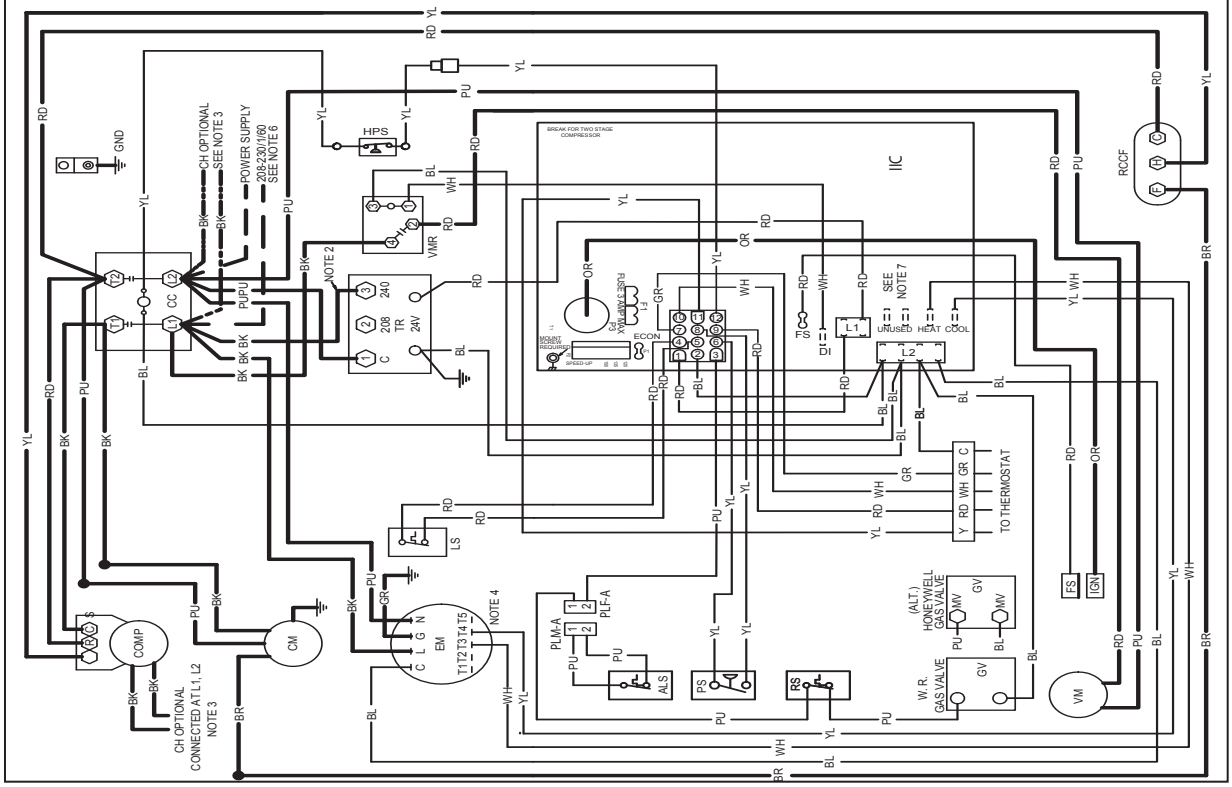

WARNING

High Voltage: Disconnect all power before servicing or installing this unit. Multiple power sources may be present. Failure to do so may cause property damage, personal injury, or death.

Wiring is subject to change. Always refer to the wiring diagram or the unit for the most up-to-date wiring.

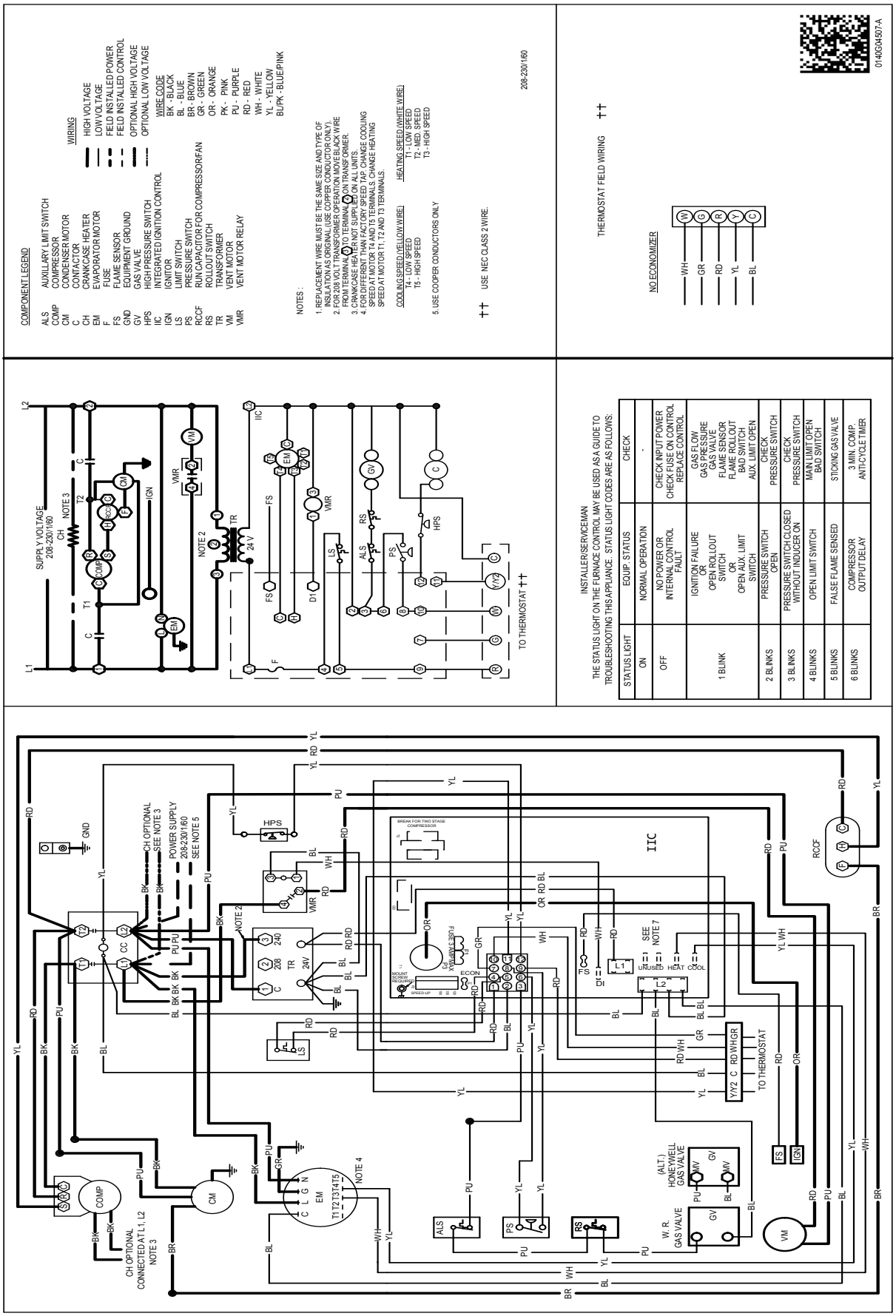

WARNING

High Voltage: Disconnect all power before servicing or installing this unit. Multiple power sources may be present. Failure to do so may cause property damage, personal injury, or death.

Wiring is subject to change. Always refer to the wiring diagram or the unit for the most up-to-date wiring.

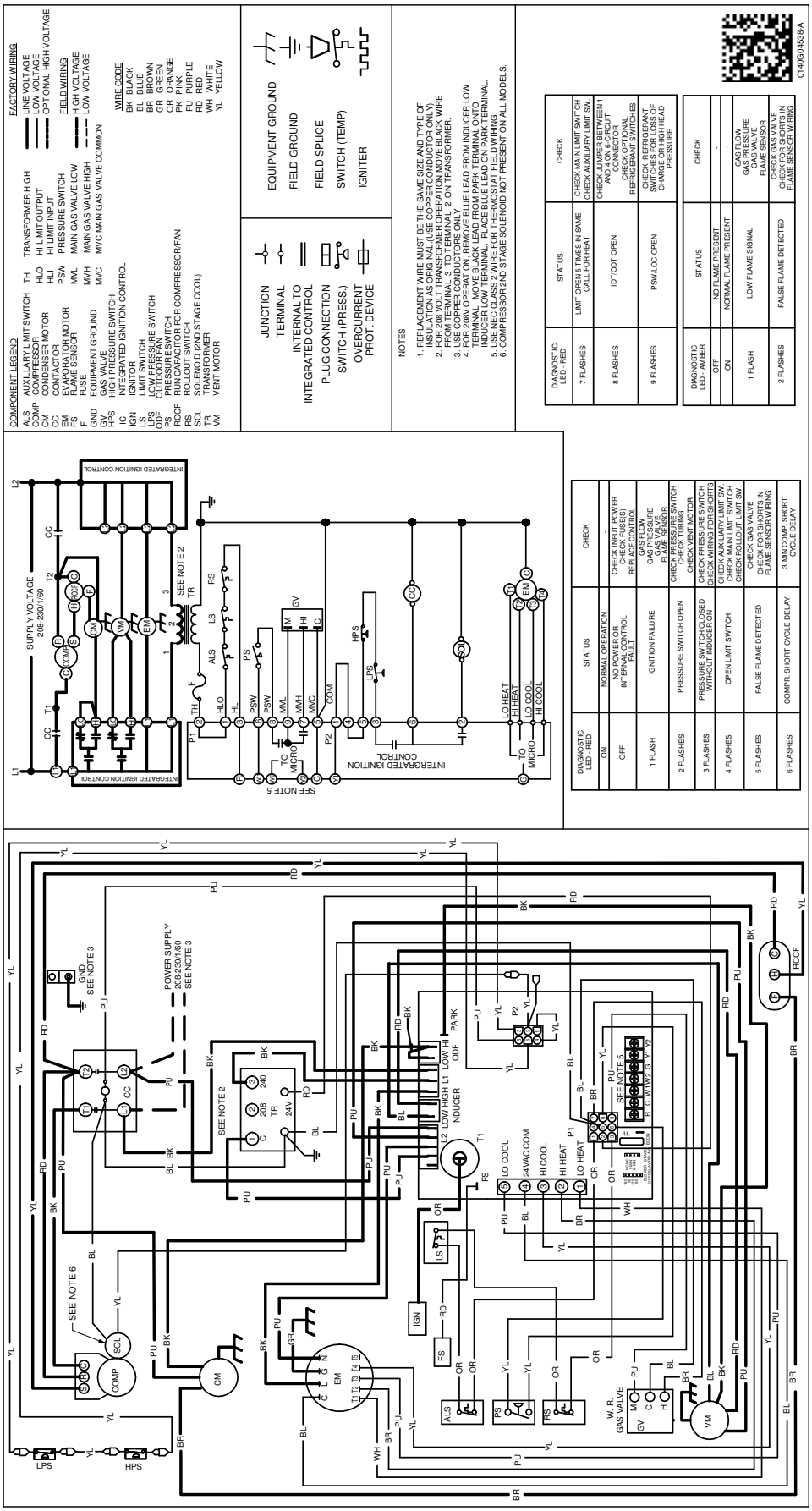

WARNING

High Voltage: Disconnect all power before servicing or installing this unit. Multiple power sources may be present. Failure to do so may cause property damage, personal injury, or death.

Wiring is subject to change. Always refer to the wiring diagram or the unit for the most up-to-date wiring.

Accessory Description	Item Number	
	Medium Chassis	Large Chassis
Concentric Kit	CDK36	CDK4872
Downflow Economizer	PGEDJ101/102	PGEDJ103
Downflow Internal Filter Rack (with economizer)	DDNIFRPGMM	N/A (built into economizer)
Downflow Internal Filter Rack (no economizer)	PGFR102	PGFR103
Downflow Manual Damper	PGMDD101/102	PGMDD103
Downflow Motorized Damper	PGMDMD101/102	PGMDMD103
Downflow Square to Round	SQRPG101/102	SQRPG103
Economizer Wiring Harness	0259G00215	0259G00215
External Horizontal Filter Rack	DPHFRA	DPHFRA
Flue Extension Kit	FLHDKT-1	FLHDKT-1
High-Altitude Kit	HA-03	HA-03
Horizontal Duct Cover	20464501PDGK	20464502PDGK
Horizontal Economizer	DHZECNJPGCHM	DHZECNJPGCHL
Horizontal Manual Damper	PGMDH102	PGMDH103
Horizontal Motorized Damper	PGMDMH102	PGMDMH103
Horizontal Square to Round	SQRPGH101/102	SQRPGH103
Internal Horizontal Filter Rack	DHZIFRPGCHA	DHZIFRPGCHA
LP Conversion Kit	LPM-08	LPM-08
Outdoor Thermostat with Housing	OTDFPKG-01	OTDFPKG-01
Roof Curb	D14CRBPGCHMA	D14CRBPGCHMA

The manufacturing entity reserves the right to discontinue, or change at any time, specifications or designs without notice or without incurring obligations.