GMVC80(A) / GCVC80(A)

HEATING INPUT: 60,000–100,000 BTU/H

TWO-STAGE, VARIABLE-SPEED ECM GAS FURNACE 80% AFUE

Contents

Nomenclature 2
Product Specifications 3
Dimensions 5
Airflow Data 7
Accessories 8
Wiring Diagram 10

ComfortBridge™ technology

CoolCloud™

Standard Features

- Integrated communicating ComfortBridge™ technology
- Two-stage gas valve provides quiet, economical heating
- Commissioning and diagnostics via on board Bluetooth with the CoolCloud™ phone and tablet application
- Efficient and quiet variable-speed ECM circulator motor gently ramps up or down according to heating or cooling demand
- SureStart® Silicon Nitride igniter designed for long igniter life
- Self-diagnostic control board with constant memory fault code history output to a triple 7-segment display
- Low constant fan speed circulates air throughout the home
- Quiet, two-speed induced draft blower
- California Low NOx emissions-compliant models available
- Can no longer be installed in California's South Coast Air Quality Management District (SCAQMD) on or after October 1, 2019.
- AHRI Certified; ETL Listed

Cabinet Features

- Fully insulated, heavy-gauge steel cabinet with durable baked-enamel finish
- Multi-position installation:
  GMVC80: upflow, horizontal left or right
  GCVC80: downflow, horizontal left or right
- Removable bottom for side- or bottom-return applications
- Convenient left or right connection for gas/electric service
- Cabinet air leakage ≤ 2%
- Coil and furnace fit flush for most installations

LIFETIME HEAT EXCHANGER LIMITED WARRANTY*

10 YEAR UNIT REPLACEMENT LIMITED WARRANTY*

10 YEAR PARTS LIMITED WARRANTY*

Intertek

AHRI CERTIFIED

COMPANY WITH QUALITY SYSTEM CERTIFIED BY DNV GL = ISO 9001 =

COMPANY WITH ENVIRONMENTAL SYSTEM CERTIFIED BY DNV GL = ISO 14001 =

* Complete warranty details available from your local dealer or at www.franklinhvacsystems.com. To receive the Lifetime Heat Exchanger Limited Warranty (good for as long as you own your home), 10-Year Unit Replacement Limited Warranty and 10-Year Parts Limited Warranty, online registration must be completed within 60 days of installation. Online registration is not required in California or Québec. The duration of warranty coverage in Texas and Florida differs in some cases.

G	M	V	C	80	040	4	C	*	**
1	2	3	4	5,6	7,8,9	10	11	12	13,14

BRAND

G - Goodman® Brand

CONFIGURATION

M - Upflow/Horizontal

C - Downflow/Horizontal

MOTOR

V - Variable Speed ECM / ComfortBridge™

E - Multi-Speed ECM S - Single Speed

GAS VALVE

M - Modulating S - Single Stage

C - Two Stage

AFUE

80 - 80% AFUE

MBTU/H

040 - 40,000 BTU/h 100 - 100,000 BTU/h

060 - 60,000 BTU/h 120 - 120,000 BTU/h

080 - 80,000 BTU/h

MAXIMUM CFM

2 - 800 CFM 4 - 1600 CFM

3 - 1200 CFM 5 - 2000 CFM

CABINET WIDTH

A - 14" C - 21"

B - 17½" D - 24½"

NOx

N - Natural Gas

X - Low NOx

ENGINEERING

Major /Minor Revisions

* Not used for inventory control.

	GMVC80 0603B*A	GMVC80 0604B*A	GMVC80 0803B*A	GMVC80 0804C*A	GMVC80 0805C*A	GMVC80 0805D*A	GMVC80 1005C*A
Heating Capacity							
High Fire Input (BTU/h)[1]	60,000	60,000	80,000	80,000	80,000	80,000	100,000
High Fire Output (BTU/h)[1] :							
Natural Gas	48,000	48,000	64,000	64,000	64,000	64,000	80,000
LP Gas	48,000	48,000	64,000	64,000	64,000	64,000	80,000
Low Fire Input (BTU/h)[1]	42,000	42,000	56,000	56,000	56,000	56,000	70,000
Low Fire Output (BTU/h)[1] :							
Natural Gas	33,600	33,600	44,800	44,800	44,800	44,800	56,000
LP Gas	33,600	33,600	44,800	44,800	44,800	44,800	56,000
AFUE[2]	80	80	80	80	80	80	80
Available AC @ 0.5” ESP	1.5 - 3.0	1.5 - 4.0	1.5 - 3.0	3.0 - 4.0	2.0 - 5.0	2.5 - 5.0	2.0 - 5.0
Temp Rise Range (° F) High/Low Fire	15-45 / 15-45	20-50 / 20-50	30-60 / 30-60	25-55 / 25-55	20-50 / 20-50	20-50 / 20-50	25-55 / 25-55
Circulator Blower							
Size (D x W)	10” x 8”	10” x 8”	10” x 8”	11" x 10"	10” x 10”	11" x 10"	10” x 10”
Horsepower - RPM	1/2	3/4	1/2	1/2	3/4	3/4	3/4
Speed	Variable ECM	Variable ECM	Variable ECM	Variable ECM	Variable ECM	Variable ECM	Variable ECM
Vent Diameter[1]	4”	4”	4”	4”	4”	4”	4”
No. of Burners	3	3	4	4	4	4	5
Electrical Data							
Min. Circuit Ampacity[3]	7.75	10.6	7.75	7.75	10.6	10.6	10.6
Max. Overcurrent Device (amps)[4]	15	15	15	15	15	15	15
Ship Weight (lbs)	105	107	110	118	121	129	124

1 Natural Gas BTU/h; for altitudes above from 0’ to 4,500’ above sea level, reduce input rating 4% for each 1,000’ above 4,500’ altitude. Low-fire rate is 70% of high-fire rate.

2 DOE AFUE based upon Isolated Combustion System (ICS)

3 Minimum Circuit Ampacity = (1.25 x Circulator Blower Amps) + ID Blower amps. Wire size should be determined in accordance with National Electrical Codes. Extensive wire runs will require larger wire sizes.

4 Maximum Overcurrent Protection Device refers to maximum recommended fuse or circuit breaker size. May use fuses or HACR-type circuit breakers of the same size as noted.

Notes

- All furnaces are manufactured for use on 115 VAC, 60 Hz, single-phase electrical supply.
- Gas Service Connection ½” FPT
- Important: Size fuses and wires properly and make electrical connections in accordance with the National Electrical Code and/or all existing local codes.

	GCVC80 0603B*A	GCVC80 0803B*A	GCVC80 0805C*A	GCVC80 1005C*A
HEATING CAPACITY				
High Fire Input (BTU/h)[1]	60,000	80,000	80,000	100,000
High Fire Output (BTU/h)[1]				
Natural Gas	48,000	64,000	64,000	80,000
LP Gas	48,000	64,000	64,000	80,000
Low Fire Input (BTU/h)[1]	42,000	56,000	56,000	70,000
Low Fire Output (BTU/h)[1]				
Natural Gas	33,600	44,800	44,800	56,000
LP Gas	33,600	44,800	44,800	56,000
AFUE[2]	80	80	80	80
Available AC @ 0.5” ESP	1.5 - 3.0	1.5 - 3.0	2.0 - 5.0	2.0 - 5.0
Temp Rise Range (° F) High/Low Fire	25-55 / 25-55	30-60 / 30-60	25-55 / 25-55	20-50 / 20-50
CIRCULATOR BLOWER				
Size (D x W)	10” x 8”	10” x 8”	10” x 10”	10” x 10”
Horsepower - RPM	1/2	1/2	3/4	3/4
Speed	Variable ECM	Variable ECM	Variable ECM	Variable ECM
Vent Diameter[2]	4”	4”	4”	4”
No. of Burners	3	4	4	5
ELECTRICAL DATA				
Min. Circuit Ampacity[3]	7.75	7.75	10.6	10.6
Max. Overcurrent Device (amps)[4]	15	15	15	15
SHIP WEIGHT (LBS)	105	109	125	129

1 Natural Gas BTU/h; for altitudes above from 0’ to 4,500’ above sea level, reduce input rating 4% for each 1,000’ above 4,500’ altitude. Low-fire rate is 70% of high-fire rate.

2 DOE AFUE based upon Isolated Combustion System (ICS)

3 Minimum Circuit Ampacity = (1.25 x Circulator Blower Amps) + ID Blower amps. Wire size should be determined in accordance with National Electrical Codes. Extensive wire runs will require larger wire sizes.

4 Maximum Overcurrent Protection Device refers to maximum recommended fuse or circuit breaker size. May use fuses or HACR-type circuit breakers of the same size as noted.

NOTES

- All furnaces are manufactured for use on 115 VAC, 60 Hz, single-phase electrical supply.
- Gas Service Connection ½” FPT
- Important: Size fuses and wires properly and make electrical connections in accordance with the National Electrical Code and/or all existing local codes.

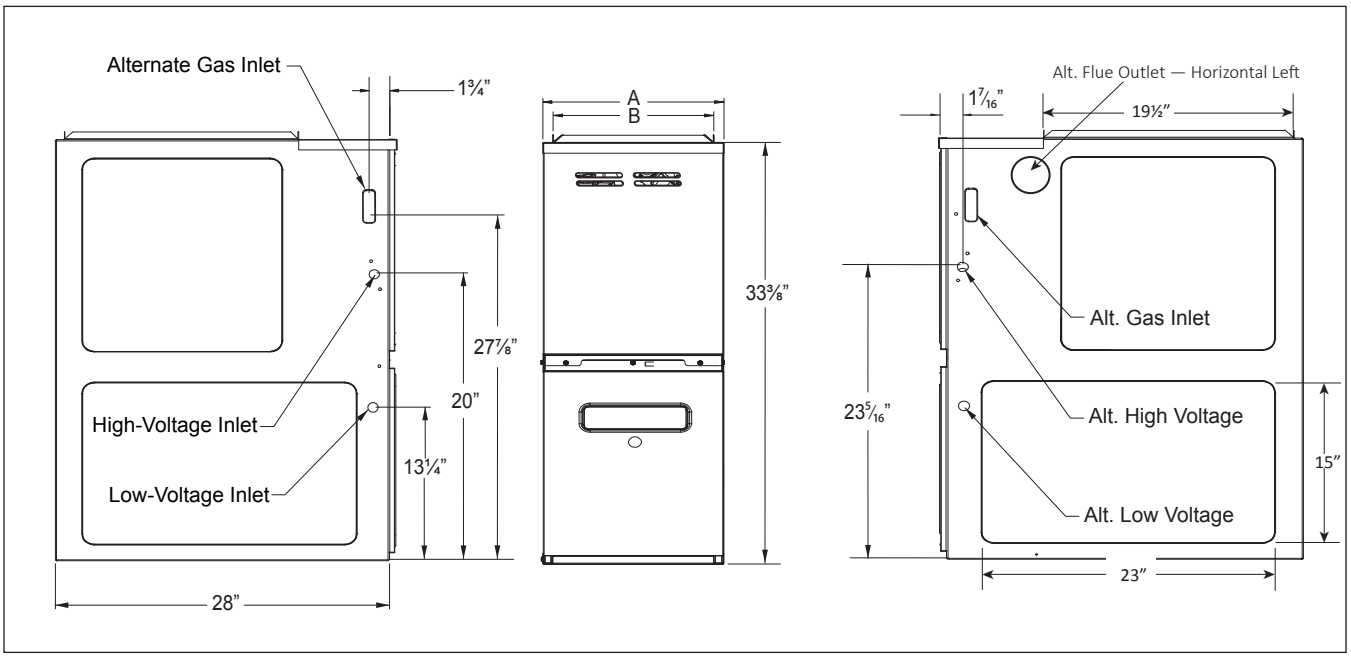

Model	Dimensions			Heights	
	W	D	H	A	B
GMVC800603B**	17½”	28”	33⅜"	17½”	16”
GMVC800604B**	17½”	28”	33⅜"	17½”	16”
GMVC800803B**	17½”	28”	33⅜"	17½”	16”
GMVC800804C**	21”	28”	33⅜"	21”	19½”
GMVC800805C**	21”	28”	33⅜"	21”	19½”
GMVC800805D**	24½”	28"	33⅜"	24½”	23"
GMVC801005C**	21”	28”	33⅜"	21”	19½”

Minimum Clearances to Combustible Materials

Sides	Rear	Front	Bottom	Vent		Top
				SW	B	
1	0	3	C	6	1	1

C = If placed on combustible floor, the floor MUST be wood ONLY.

Notes:

- For servicing or cleaning, a 24” front clearance is recommended.
- Unit connections (electrical, flue, and drain) may necessitate greater clearances than the minimum clearances listed above.
- In all cases, accessibility clearance must take precedence over clearances from the enclosure where accessibility clearances are greater.
- Refer to the appropriate USA and Canadian codes:
  - In the USA: the National Fuel Gas Code NFPA 54 / ANSI Z223.1
  - In Canada: the Canada National Standard of Canada, CAN/CSA B149.1 and CAN/CSA B142.2

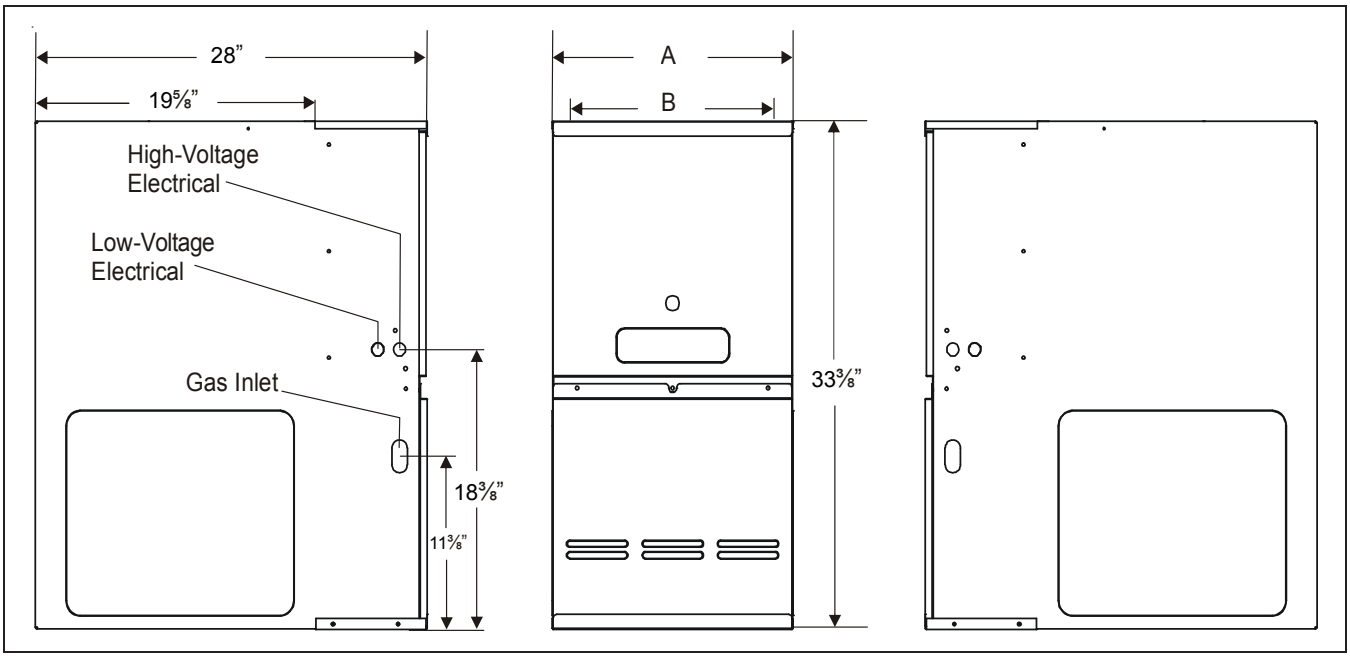

Model	Dimensions			Heights	
	W	D	H	A	B
GCVC800603B**	17½”	28”	33⅜"	17½”	16”
GCVC800803B**	17½”	28”	33⅜"	17½”	16”
GCVC800805C**	21”	28”	33⅜"	21”	19½”
GCVC801005C**	21”	28”	33⅜"	21”	19½”

Minimum Clearances to Combustible Materials

Sides	Rear	Front [1]	Vent [2]		Top
			SW	B	
1	0	3	6	1	1

Approved for line contact in the horizontal position.

[1] 24” clearance for serviceability recommended.

[2] Single Wall Vent (SW) to be used only as a connector. Refer to the venting tables outlined in the Installation Manual for additional venting requirements.

MODEL/TEMP RISE RANGE (MID RISE)	GCVC800603BXA* 25-55 (40)		GCVC800603BXA* 30-60 (45)		GCVC800805CXA* 25-55 (40)		GCVC801005CXA* 20-50 (35)		GMVC800603B*A* 15-45 (30)		GMVC800604B*A* 20-50 (35)	
	CFM	RISE	CFM	RISE	CFM	RISE	CFM	RISE	CFM	RISE	CFM	RISE
Recommended cfm for high heat / expected temperature rise	1100	40	1325	45	1470	40	2090	35	1400	32	1275	35
Lowest recommended cfm for hi heat / expected temperature rise	810	55	990	60	1070	55	1475	50	980	45	890	50
Maximum cfm for hi heat / expected temperature rise	1400	32	1400	42	2200	27	2200	34	1400	32	1760	25

NOTE: Low Heat CFM = High Heat CFM X .7. Low Heat Temperature Rise Is Expected to Equal High Heat Temparatue Rise ± 5% 0140F02402-A

MODEL/TEMP RISE RANGE (MID RISE)	GMVC800803B*A* 30-60 (45)		GMVC800804C*A* 25-55 (40)		GMVC800805C*A* 20-50 (35)		GMVC800805D*A* 20-50 (35)		GMVC801005C*A* 25-55 (40)	
	CFM	RISE	CFM	RISE	CFM	RISE	CFM	RISE	CFM	RISE
Recommended cfm for high heat / expected temperature rise	1330	45	1400	42	1700	35	1700	35	1850	40
Lowest recommended cfm for hi heat / expected temperature rise	980	60	1090	54	1175	50	1175	50	1350	55
Maximum cfm for hi heat / expected temperature rise	1400	42	1760	34	2200	27	2200	27	2200	34

NOTE: Low Heat CFM = High Heat CFM X .7. Low Heat Temperature Rise Is Expected to Equal High Heat Temparatue Rise ± 5% 0140F02402-A

GCVC800603BXA*, GCVC800803BXA*
GMCV800603B*A*, GMVC800803B*A*
Cooling Speed
(@ .1" - .8" w.c. ESP)

Tons	High-Stage	Low-Stage CFM
1.5	600	420
2	800	560
2.5	1,000	700
3	1,200	840
MAX	1,400	

GMVC800604B*A*
GMVC800804C*A*
Cooling Speed
(@ .1" - .8" w.c. ESP)

Tons	High-Stage	Low-Stage CFM
2	800	560
2.5	1,000	700
3	1,200	840
4	1,600	1120
MAX	1,760	

GCVC800805CXA*
GCVC801005CXA*
Cooling Speed (@ .1" - .8" w.c. ESP)

Tons	High-Stage	Low-Stage CFM
2	800	560
3	1,200	840
4	1,600	1,120
5	2,000	1,400
MAX	2,000	

GMVC800805C*A*, GMVC800805D*A*
GMVC801005C*A*
Cooling Speed
(@ .1" - .8" w.c. ESP)

Tons	High-Stage	Low-Stage CFM
2	800	560
3	1,200	840
4	1,600	1,120
5	2,000	1,400
MAX	2,200	

All furnaces ship as high speed for cooling. Installer must adjust blower speed as needed.
For most jobs, about 400 CFM per ton when cooling is desirable.
Do not operate above .5" w.c. ESP in heating mode. Operating CFM between .5" and .8" w.c. is tabulated for cooling purposes only.

GCVC Continuous Fan Speeds

Model	Furnace Maximum CFM	Continuous Fan Speed
GCVC800603BXA*	1,400	350-1,400
GCVC800803BXA*	1,400	350-1,400
GCVC800805CXA*	2,200	550-2,200
GCVC801005CXA*	2,200	550-2,200

GCVC8 Minimum Filter Sizes

Model #	GCVC800603BX, GCVC80803BX	GCVC800805CX	GCVC801005CX
Filter Size (in^2)	(2) 10 x 20 or (1) 16 x 25 (Top Return)	(2) 14 x 20 or (1) 20 x 25 (Top Return)	

Note: Other size filters of equal or greater surface area may be used; filters may also be centrally located.

[1] Use 2 - 16 X 25 filters on side returns or 20 X 25 filter on bottom return if furnace is connected to a cooling unit over 4 tons nominal capacity.

GMVC Continuous Fan Speeds

Model	Furnace Maximum CFM	Continuous Fan Speed
GMVC800603B*A	1400	350 - 1400
GMVC800604B*A	1760	440 - 1760
GMVC800803B*A	1400	350 - 1400
GMVC800804C*A	1760	440 - 1760
GMVC800805C*A	2200	550 - 2200
GMVC800805D*A	2200	550 - 2200
GMVC801005C*A	2200	550 - 2200

GMVC8 Minimum Filter Sizes

Model #	GMVC800604B*, GMVC800603B* GMVC800803B*	GMVC800805C*, GMVC800804C*, GMVC800805D*	GMVC801005C*
Filter Size (in^2)	(1) 16 x 25 (Side or Bottom)	(1) 16 x 25 (Side or Bottom) [1]	(2) 16 x 25 (Side) or (1) 20 x 25 (Bottom)

Note: Other size filters of equal or greater surface area may be used; filters may also be centrally located.

[1] Use 2 - 16 X 25 filters on side returns or 20 X 25 filter on bottom return if furnace is connected to a cooling unit over 4 tons nominal capacity.

Accessories

Model	Description	GMVC80 0603B*	GMVC80 0604B*	GMVC80 0803B*	GMVC80 0804C*	GMVC80 0805C*	GMVC80 0805D*	GMVC80 1005C*
AFE18-60A	Fossil Fuel (Dual Fuel) Kit	√	√	√	√	√	√	√
HA-02	High-Altitude Natural Gas Kit	√	√	√	√	√	√	√
LPLP03	Low LP Gas Pressure Switch	√	√	√	√	√	√	√
LPM-06	LP Conversion Kits	√	√	√	√	√	√	√

Model	Description	GCVC80 0603B*	GCVC80 0803B*	GCVC80 0805C*	GCVC80 1005C*
SBT17	Downflow Sub-Base 17.5"	√	√	—	—
SBT21	Downflow Sub-Base 21"	—	—	√	√
AFE18-60A	Fossil Fuel (Dual Fuel) Kit	√	√	√	√
HA-02	High-Altitude Natural Gas Kit	√	√	√	√
LPLP03	Low LP Gas Pressure Switch	√	√	√	√
LPM-06	LP Conversion Kits	√	√	√	√

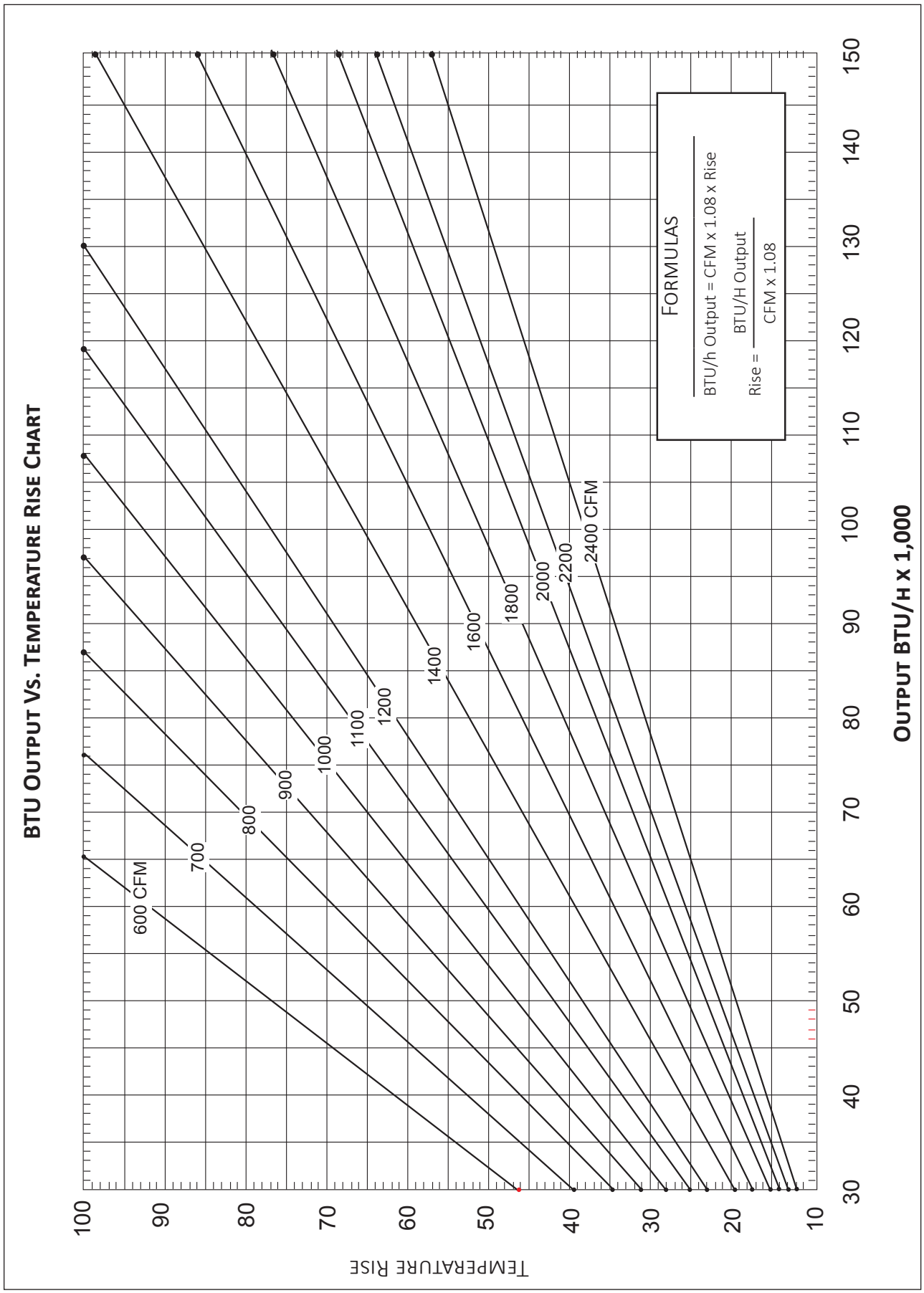
BTU Output Vs. Temperature Rise Chart
Temperature Rise
Output BTU/H x 1,000
600 CFM
700
800
900
1000
1100
1200
1400
1600
1800
2000
2200
2400 CFM
Formulas
BTU/h Output = CFM x 1.08 x Rise
Rise = BTU/H Output / CFM x 1.08

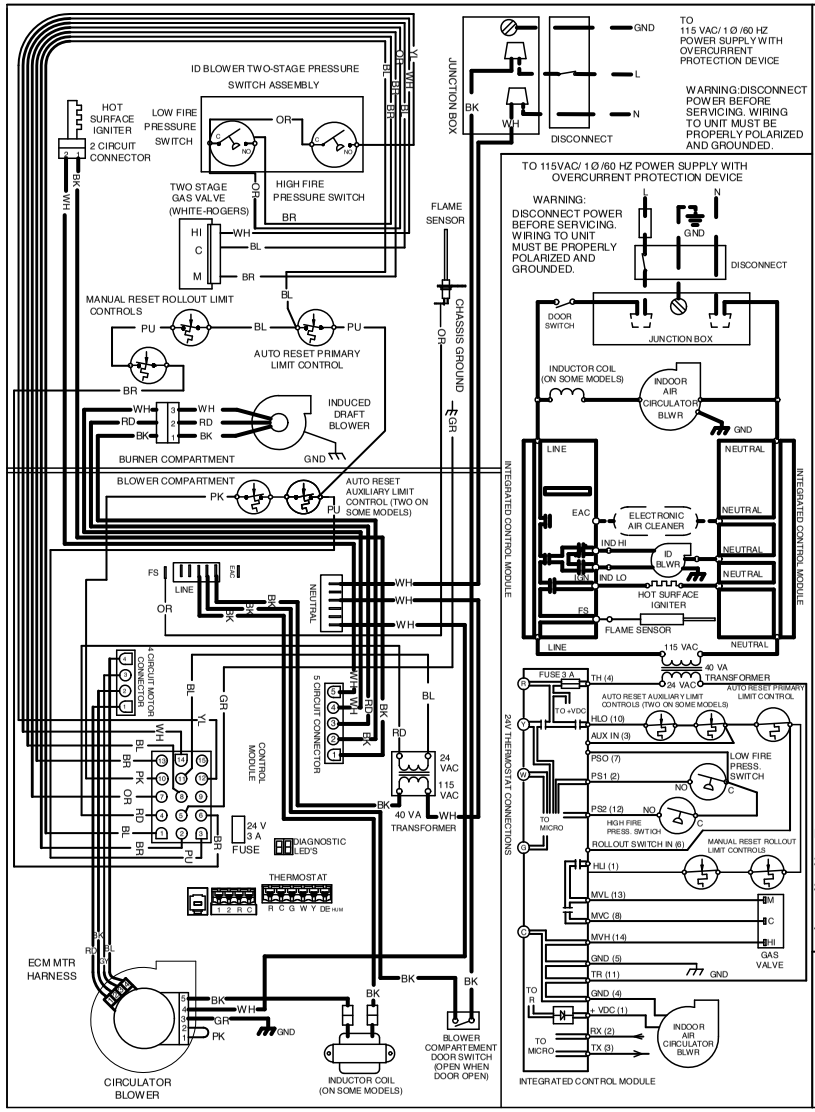

Menu Navigation and Selection Instructions

Using Phone Application over Bluetooth Network:
1) Connect to the furnace (instructions provided by phone during the connection Process).
2) Select desired settings menu
3) Select item that requires adjustment and make necessary selection
4) Submit Changes

Using On-Board Push Buttons:
1) Use the Right and Left Buttons to scroll between menus
2) Use the Center Button to select desired menu when menu code is shown on7-segment displays
3) Use the Left and Right Buttons to scroll through options within the desired menu (the display will flash while scrolling through options for selection)
4) Use the Center Button to select the displayed option (when selected the display will stop flashing)
5) Use the Center Button to finalize selection and return to the main menu

Airflow Settings Instructions

1) For non-communicating installations, select the type of unit installed in the OdS menu (1AC = single-stage air conditioner, 1HP = single-stage heat pump, 2AC = 2 stage air conditioner, 2HP = 2 stage heat pump) Default = OFF (no outdoor unit).
2) The tonnage menu Must be used to select Cooling/Heat Pump Airflow (non-communicating installation). Tonnage selection options and corresponding airflow CFM can be found to the right. [Airflow = Tonnage Selection x 400] Default selection is 6.0 tons.
3) [Optional] Use the Cooling Trim Menu (CtF) to adjust the cooling airflow from -10% to +10% (2% increments). This applies for 2 stage communicating outdoor units and single or 2 stage non-communicating outdoor units.
4) [Optional] Use the Heating Trim Menu (HtF) to adjust the heat pump airflow from -10% to +10% (2% increments). This applies for 2 stage communicating outdoor units and single or 2 stage non-communicating outdoor units.
5) [Optional] Use the Constant Fan Menu (FSD) to select the percentage of maximum airflow for continuous fan
6) [Optional] Use the Cooling Airflow Profile Menu (CAP) to select between 5 cooling airflow profiles. Profile options 1-4 are listed above (option 5 is adjustable). See installation manual for further details

Tonnage Menu

Tonnage Selection	Airflow	Tonnage Selection	Airflow
1.0	400	3.5	1400
1.1	440	3.6	1440
1.2	480	3.7	1480
1.3	520	3.8	1520
1.4	560	3.9	1560
1.5	600	4.0	1600
1.6	640	4.1	1640
1.7	680	4.2	1680
1.8	720	4.3	1720
1.9	760	4.4	1760
2.0	800	4.5	1800
2.1	840	4.6	1840
2.2	880	4.7	1880
2.3	920	4.8	1920
2.4	960	4.9	1960
2.5	1000	5.0	2000
2.6	1040	5.1	2040
2.7	1080	5.2	2080
2.8	1120	5.3	2120
2.9	1160	5.4	2160
3.0	1200	5.5	2200
3.1	1240	5.6	2240
3.2	1280	5.7	2280
3.3	1320	5.8	2320
3.4	1360	5.9	2360
		6.0	2400

NOTES:.
1. SET HEAT ANTICIPATOR ON ROOM THERMOSTAT AT 0.7 AMPS.
2. MANUFACTURER'S SPECIFIED REPLACEMENT PARTS MUST BE USED WHEN SERVICING
3. IF ANY OF THE ORIGINAL WIRE AS SUPPLIED WITH THE FURNACE MUST BE REPLACED, AT LEAST 105° C. USE COPPER CONDUCTORS ONLY.
4.UNIT MUST BE PERMANENTLY GROUNDED AND CONFORM TO N.E.C. AND LOCAL CODES.

COLOR CODES:		
PK PINK	LOW VOLTAGE (24V)	EQUIPMENT GND
BR BROWN	LOW VOLTAGE FIELD	FIELD GND
WH WHITE	HI VOLTAGE (115V)	FIELD SPLICE
BL BLUE	HI VOLTAGE FIELD	SWITCH (TEMP.)
GY GRAY	JUNCTION	IGNITER
RD RED	TERMINAL	SWITCH (PRESS.)
YL YELLOW	INTERNAL TO INTEGRATED CONTROL	OVERCURRENT PROT. DEVICE
OR ORANGE	PLUG CONNECTION	
PU PURPLE		
GR GREEN		
BK BLACK		

Maximum Airflow Output

- 3 Ton 60k BTUH = 1,400 CFM
- 3 Ton 80k BTUH = 1,650 CFM
- 4 Ton Models = 1,760 CFM
- 5 Ton Models = 2,200 CFM

0140F02616-A

Wiring is subject to change. Always refer to the wiring diagram or the unit for the most up-to-date wiring.

WARNING **High Voltage:** Disconnect all power before servicing or installing this unit. Multiple power sources may be present. Failure to do so may cause property damage, personal injury, or death.

Goodman Manufacturing Company, L.P., reserves the right to discontinue, or change at any time, specifications or designs without notice or without incurring obligations. © 2021 • Goodman Manufacturing Company, L.P. • Houston, Texas • Printed in the USA.