GMS8/GDS8/GHS8

Heating Input : 40,000–140,000 BTU/h

Single-Stage, Multi-Speed, Multi-Position Gas Furnace 80% AFUE

Contents

Nomenclature 2
Product Specifications 3
Dimensions 5
Airflow Data 8
Wiring Diagrams 11
Accessories 12
Minimum Filter Sizes 12

Standard Features

- Heavy-duty aluminized-steel, dual-diameter tubular heat exchanger
- Single-stage gas valve
- Durable Hot-surface igniter
- Quiet, single-speed draft induced
- Self-diagnostic control board
- Color-coded low-voltage terminals
- Multi-speed blower motor
- California Low NOx emissions models available
- GHS8: High static airflow capability
- Can no longer be installed in California's South Coast Air Quality Management District (SCAQMD) on or after October 1, 2019.
- AHRI Certified; ETL Listed

Cabinet Features

- Installation:
  - GMS8/GHS8-upflow, horizontal left or right
  - GDS8- Dedicated downflow
- Convenient left or right connection for gas and electrical service
- Heavy-gauge steel cabinet with durable baked-enamel finish
- Foil faced insulated heat exchanger

LIFETIME HEAT EXCHANGER LIMITED WARRANTY* | 10 YEAR PARTS LIMITED WARRANTY* | Intertek | AHRI CERTIFIED® | COMPANY WITH QUALITY SYSTEM CERTIFIED BY DNV GL = ISO 9001 = | COMPANY WITH ENVIRONMENTAL SYSTEM CERTIFIED BY DNV GL = ISO 14001 =

* Complete warranty details available from your local dealer or at www.franklinhvacsystems.com. To receive the Lifetime Heat Exchanger Limited Warranty (good for as long as you own your home) and 10-Year Parts Limited Warranty, online registration must be completed within 60 days of installation. Online registration is not required in California or Québec.

G	M	S	80	040	3	B	X	**
1	2	4	5,6	7,8,9	10	11	12	13,14

BRAND

G- Goodman® Brand

CONFIGURATION

M- Upflow/Horizontal

C- Downflow/Horizontal

D- Dedicated Downflow

H- High Airflow

GAS VALVE

S- Single Stage, Single Speed

AFUE

80- 80% AFUE

MBTU/H

040- 40,000 BTU/h

060- 60,000 BTU/h

080- 80,000 BTU/h

100- 100,000 BTU/h

120- 120,000 BTU/h

140- 140,000 BTU/h

ENGINEERING

Major / Minor Revisions

NOx

N- Natural Gas

X- Low NOx

CABINET WIDTH

A- 14"

B- 17½"

C- 21"

D- 24½"

MAXIMUM CFM

3- 1200 CFM

4- 1600 CFM

5- 2000 CFM

	GMS8 0403A*B	GMS8 0603A*B	GMS8 0604B*B	GMS8 0804B*B	GMS8 0805C*B	GMS8 1005C*B	GMS8 1205D*B	GMS8 1405DNC
Heating Capacity								
Input	40,000	60,000	60,000	80,000	80,000	100,000	120,000	140,000
Natural Gas Output	32,000	48,000	48,000	64,000	64,000	80,000	96,000	112,000
LP Gas Output	32,000	48,000	48,000	64,000	64,000	80,000	96,000	96,000
AFUE [1]	80	80	80	80	80	80	80	80
Available AC @ 0.5” ESP	3	3	4	4	5	5	5	5
Temperature Rise Range (°F)	25- 55	20- 50	20- 50	35- 65	35- 65	35- 65	40- 70	40- 70
Circulator Blower								
Size (D x W)	10” x 6”	10” x 6”	10” x 8”	10” x 8”	10” x 10”	10” x 10”	11” x 10”	11” x 10”
Horsepower @1075 RPM	⅓	⅓	½	½	½	½	¾	¾
Speed	4	4	4	4	4	4	4	4
Vent Diameter [2]	4"	4"	4"	4"	4"	4"	4"	4"
No. of Burners	2	3	3	4	4	5	6	6
Electrical Data								
Min. Circuit Ampacity [3]	4.8	4.8	8.8	8.8	8.8	8.8	14.7	14.7
Max. Overcurrent Device (amps) [4]	15	15	15	15	15	15	15	15
Ship Weight (lbs)	84	88	98	106	114	118	130	130

All models available in California Low NOx-compliant versions (except GMS81405D*C*)

[1] DOE AFUE based upon Isolated Combustion System (ICS)

[2] Vent and combustion air diameters may vary depending upon vent length. Refer to the latest editions of the National Fuel Gas Code NFPA 54/ANSI Z223.1 (in the USA) and the Canada National Standard of Canada, CAN/CSA B149.1 and CAN/CSA B142.2 (in Canada).

[3] Minimum Circuit Ampacity = (1.25 x Circulator Blower Amps) + ID Blower amps. Wire size should be determined in accordance with National Electrical Codes. Extensive wire runs will require larger wire sizes.

[4] Maximum Overcurrent Protection Device refers to maximum recommended fuse or circuit breaker size. May use fuses or HACR-type circuit breakers of the same size as noted.

Notes

- All furnaces are manufactured for use on 115 VAC, 60 Hz, single-phase electrical supply.
- Gas Service Connection ½” FPT
- Important: Size fuses and wires properly and make electrical connections in accordance with the National Electrical Code and/or all existing local codes.

	GDS8 0403A*B	GDS8 0603A*B	GDS8 0804B*B	GDS8 1005C*B	GHS8 0403A*B	GHS8 0604B*B	GHS8 0805C*B
Heating Capacity							
Input	40,000	60,000	80,000	100,000	40,000	60,000	80,000
Natural Gas Output	32,000	48,000	64,000	80,000	32,000	48,000	64,000
LP Gas Output	32,000	48,000	64,000	80,000	32,000	48,000	64,000
AFUE [1]	80	80	80	80	80	80	80
Available AC @ 0.5” ESP	3	3	4	5	3	4	5
Temperature Rise Range (°F)	25- 55	30-60	35-65	40- 70	20- 50	20- 50	35- 65
Circulator Blower							
Size (D x W)	10” x 6”	10” x 6”	10” x 8”	10” x 10”	11” x 6”	11” x 8”	11” x 10”
Horsepower @1075 RPM	1/3	1/3	1/2	3/4	1/2	3/4	3/4
Speed	4	4	4	4	4	4	4
Vent Diameter [2]	4”	4”	4”	4”	4”	4”	4”
No. of Burners	2	3	4	5	2	3	4
Electrical Data							
Min. Circuit Ampacity [3]	4.8	4.8	8.8	10.5	10.5	13.7	13.7
Max. Overcurrent Device (amps) [4]	15	15	15	15	15	15	15
Ship Weight (lbs)	88	92	105	113	90	102	117

[1] DOE AFUE based upon Isolated Combustion System (ICS)

[2] Vent and combustion air diameters may vary depending upon vent length. Refer to the latest editions of the National Fuel Gas Code NFPA 54/ANSI Z223.1 (in the USA) and the Canada National Standard of Canada, CAN/CSA B149.1 and CAN/CSA B142.2 (in Canada).

[3] Minimum Circuit Ampacity = (1.25 x Circulator Blower Amps) + ID Blower amps. Wire size should be determined in accordance with National Electrical Codes. Extensive wire runs will require larger wire sizes.

[4] Maximum Overcurrent Protection Device refers to maximum recommended fuse or circuit breaker size. May use fuses or HACR-type circuit breakers of the same size as noted.

Notes

- All furnaces are manufactured for use on 115 VAC, 60 Hz, single-phase electrical supply.
- Gas Service Connection ½” FPT
- Important: Size fuses and wires properly and make electrical connections in accordance with the National Electrical Code and/or all existing local codes.

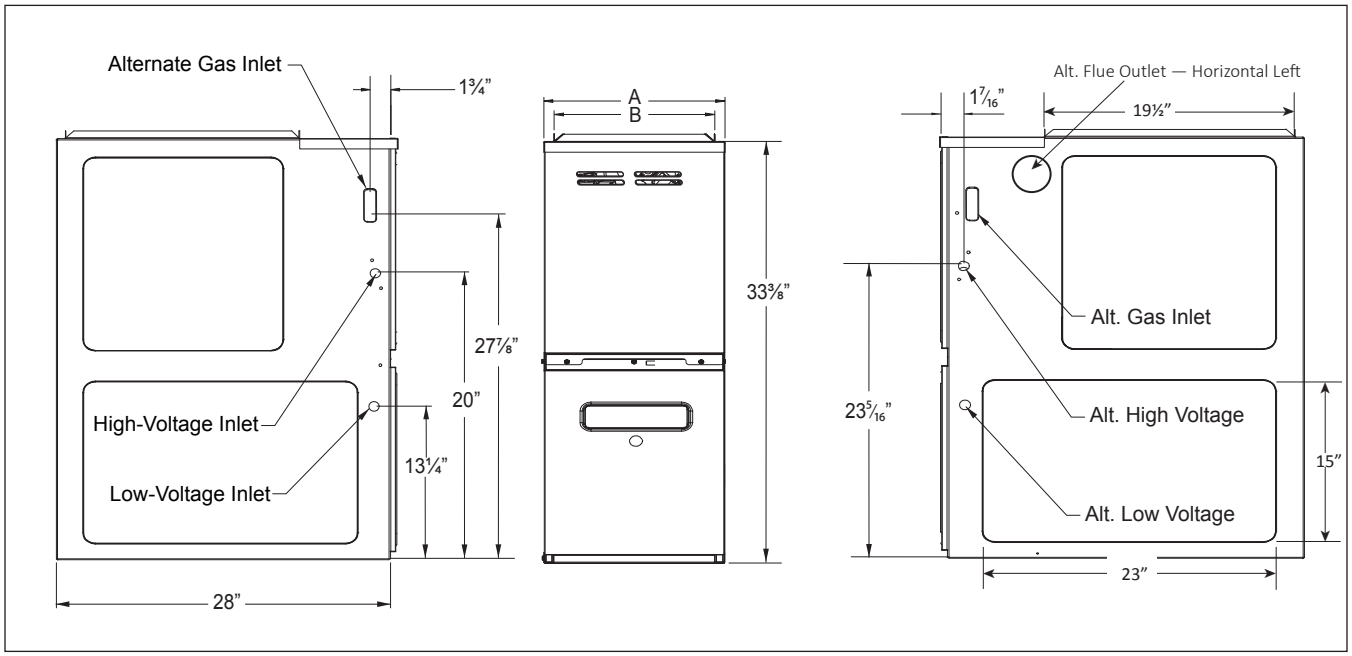

Model	A	B
GMS80403A*B	14”	12½”
GMS80603A*B	14”	12½”
GMS80604B*B	17½”	16”
GMS80804B*B	17½”	16”

Model	A	B
GMS80805C*B	21”	19½”
GMS81005C*B	21”	19½”
GMS81205D*B	24½”	23”
GMS81405DNC*	24½”	23”

Notes

- Line voltage wiring can enter through the right or left side of furnace. Low-voltage wiring can enter through the right or left side of furnace.
- Conversion kits for high-altitude (4500+ ft) natural gas operation are available. Contact your Franklin distributor or dealer for details.

Minimum Clearances to Combustible Materials

Sides	Rear	Front[1]	Vent[2]		Top
			SW	B	
1”	0”	3”	6”	1”	1”

[1] 24” clearance for serviceability recommended.

[2] Single Wall Vent (SW) to be used only as a connector. Refer to the latest editions of the National Fuel Gas Code NFPA 54/ ANSI Z223.1 (in the USA) and the Canada National Standard of Canada, CAN/CSA B149.1 and CAN/CSA B142.2 (in Canada).

Note: GMS8 approved for line contact in the horizontal position.

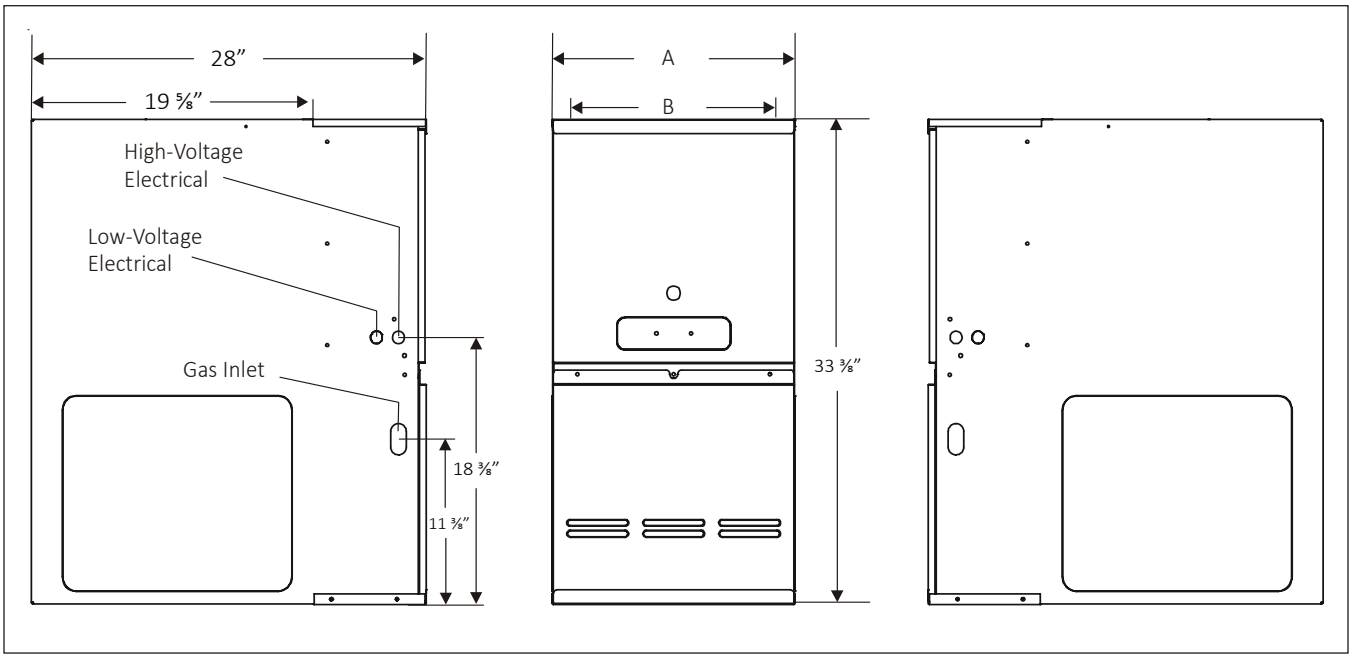

Model	A	B	Non-Combustible Floor Base
GDS80403A*B	14”	12½”	SBT14
GDS80603A*B	14”	12½”	SBT14
GDS80804B*B	17½”	16”	SBT17
GDS81005C*B	21”	19½”	SBT21

Notes

- Line voltage wiring can enter through the right or left side of furnace. Low-voltage wiring can enter through the right or left side of furnace.
- Conversion kits for high-altitude (4500+ ft) natural gas operation are available. Contact your Franklin distributor or dealer for details.

Minimum Clearances to Combustible Materials

Sides	Rear	Front[1]	Vent[2]		Top
			SW	B	
1”	0”	3”	6”	1”	1”

[1] 24” clearance for serviceability recommended.

[2] Single Wall Vent (SW) to be used only as a connector. Refer to the latest editions of the National Fuel Gas Code NFPA 54/ ANSI Z223.1 (in the USA) and the Canada National Standard of Canada, CAN/CSA B149.1 and CAN/CSA B142.2 (in Canada).

Note: GMS8 approved for line contact in the horizontal position.

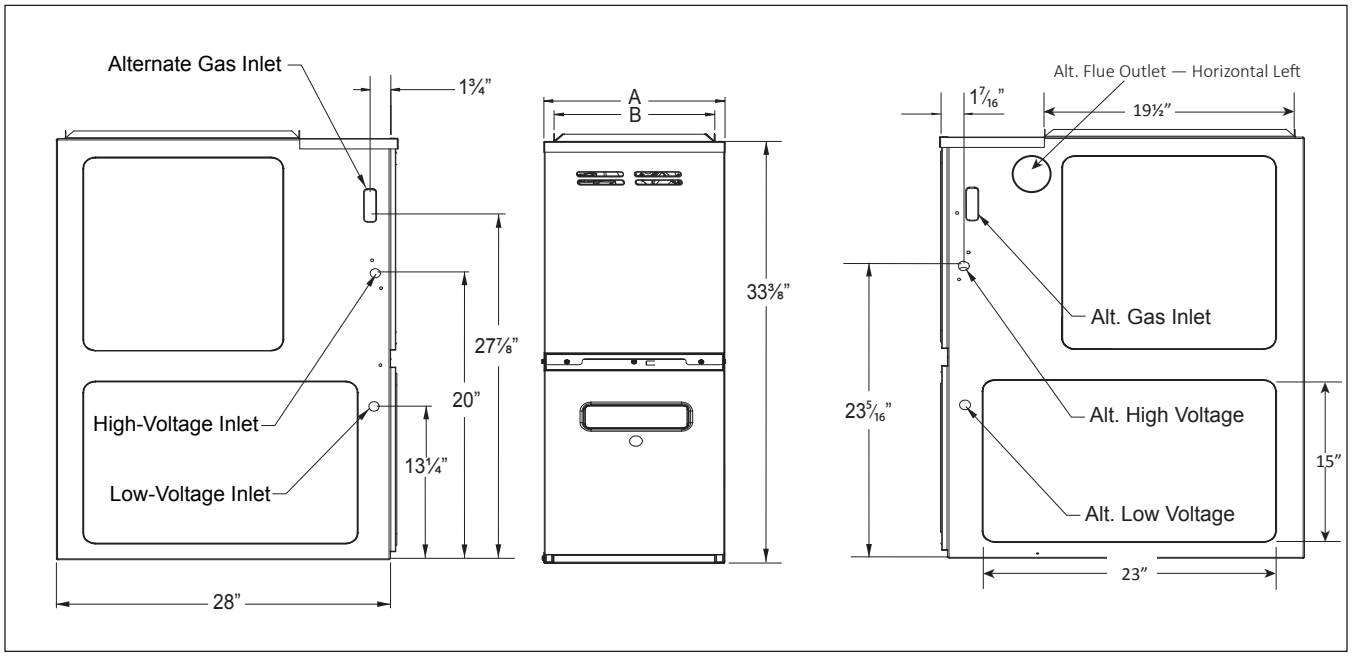

Model	A	B
GHS80403AXB*	14”	12½”
GHS80604BXB*	17½”	16”
GHS80805CXB*	21”	19½”

Notes

- Line voltage wiring can enter through the right or left side of furnace. Low-voltage wiring can enter through the right or left side of furnace.
- Conversion kits for high-altitude (4500+ ft) natural gas operation are available. Contact your Franklin distributor or dealer for details.

Minimum Clearances to Combustible Materials

Sides	Rear	Front[1]	Vent[2]		Top
			SW	B	
1”	0”	3”	6”	1”	1”

[1] 24” clearance for serviceability recommended.

[2] Single Wall Vent (SW) to be used only as a connector. Refer to the latest editions of the National Fuel Gas Code NFPA 54/ ANSI Z223.1 (in the USA) and the Canada National Standard of Canada, CAN/CSA B149.1 and CAN/CSA B142.2 (in Canada).

Note: GMS8 approved for line contact in the horizontal position.

CFM & Temperature Rise vs. External Static Pressure

Model	Motor Speed	Tons AC[1]	External Static Pressure, (Inches Water Column)												
			0.1		0.2		0.3		0.4		0.5		0.6	0.7	0.8
			CFM	Rise	CFM	Rise	CFM	Rise	CFM	Rise	CFM	Rise	CFM	CFM	CFM
GMS8 0403A*B	High	3	1,521	---	1,466	---	1,414	---	1,373	---	1,298	---	1,243	1,164	1,075
	Med	2.5	1,160	26	1,160	26	1,132	26	1,121	26	1,082	27	1,042	997	925
	Med-Lo	2	961	31	955	31	948	31	932	32	913	33	882	821	803
	Low	1.5	781	38	785	38	781	38	773	38	761	32	745	716	668
GMS8 0603A*B	High	3	1,422	31	1,352	33	1,307	34	1,197	37	1,157	38	1,092	1,075	983
	Med	2.5	1,098	40	1,081	41	1,051	42	1,039	43	1,021	44	983	924	868
	Med-Lo	2	919	48	913	49	892	50	847	----	829	----	818	792	728
	Low	1.5	758	----	741	----	741	----	733	----	699	----	677	649	626
GMS8 0604B*B	High	4	2,134	21	2,100	21	2,042	22	1,975	23	1,883	24	1,786	1,700	1,601
	Med	3.5	1,668	27	1,663	27	1,656	27	1,645	27	1,616	28	1,549	1,492	1,391
	Med-Lo	3	1,419	31	1,426	31	1,426	31	1,432	31	1,419	31	1,378	1,328	1,261
	Low	2.5	1,134	39	1,145	39	1,166	38	1,171	38	1,160	38	1,144	1,111	1,071
GMS8 0804B*B	High	4	2,051	----	1,983	----	1,895	---	1,812	---	1,725	---	1,627	1,530	1,439
	Med	3.5	1,736	---	1,708	35	1,652	36	1,611	37	1,540	38	1,475	1,394	1,307
	Med-Lo	3	1,493	35	1,668	36	1,459	41	1,429	41	1,389	43	1,339	1,274	1,204
	Low	2.5	1,200	49	1,185	50	1,180	50	1,173	51	1,158	51	1,125	1,125	1,080
GMS8 0805C*B	High	5	2,290	----	2,229	----	2,155	----	2,047	----	1,960	----	1,837	1,712	1,584
	Med	4	1,852	---	1,820	---	1,777	---	1,719	---	1,641	36	1,567	1,469	1,382
	Med-Lo	3.5	1,615	37	1,592	37	1,556	38	1,516	39	1,470	40	1,405	1,346	1,235
	Low	3	1,290	46	1,285	46	1,265	47	1,235	48	1,214	49	1,174	1,044	904
GMS8 1005C*B	High	5	2,323	---	2,225	---	2,120	35	2,040	36	1,974	38	1,801	1,688	1,577
	Med	4	1,858	40	1,847	40	1,799	41	1,744	42	1,674	44	1,577	1,493	1,399
	Med-Lo	3.5	1,596	46	1,587	47	1,571	47	1,552	48	1,493	50	1,397	1,326	1,217
	Low	3	1,291	57	1,272	58	1,261	59	1,257	59	1,205	61	1,168	1,118	1,060
GMS8 1205D*B	High	5	2,469	---	2,389	---	2,300	---	2,223	40	2,131	42	2,027	1,902	1,786
	Med	4	1,575	56	1,558	57	1,545	58	1,513	59	1,500	59	1,419	1,354	1,271
	Med-Lo	3.5	1,402	63	1,380	64	1,343	66	1,319	67	1,296	69	1,245	1,183	1,106
	Low	3	1,200	----	1,186	----	1,161	----	1,127	----	1,082	----	1,042	995	926
GMS8 1405DNC*	High	5	2,469	42	2,389	43	2,300	45	2,223	47	2,131	49	2,027	1,902	1,786
	Med	4	1,575	66	1,558	67	1,545	67	1,513	69	1,500	69	1,419	1,354	1,271
	Med-Lo	3.5	1,402	----	1,380	----	1,343	----	1,319	----	1,296	----	1,245	1,183	1,106
	Low	3	1,200	----	1,186	----	1,161	----	1,127	----	1,082	----	1,042	995	926

[1] at 0.5" ESP

Notes:

- CFM in chart is without filter(s). Filters do not ship with this furnace, but must be provided by the installer. If the furnace requires two return filters, this chart assumes both filters are installed.
- All furnaces ship as high-speed cooling and medium-speed heating. Installer must adjust blower cooling and heating speed as needed.
- For most jobs, about 400 CFM per ton when cooling is desirable.
- INSTALLATION IS TO BE ADJUSTED TO OBTAIN TEMPERATURE RISE WITHIN THE RANGE SPECIFIED ON THE RATING PLATE.
- This chart is for information only. For satisfactory operation, external static pressure must not exceed value shown on the rating plate.
- The dashed (----) areas indicate a temperature rise not recommended for this model.
- At higher altitudes, a properly derated unit will have approximately the same temperature rise at a particular CFM, while ESP at the CFM will be lower.

CFM & Temperature Rise vs. External Static Pressure

Model	Motor Speed	Tons AC[1]	External Static Pressure, (Inches Water Column)												
			0.1		0.2		0.3		0.4		0.5		0.6	0.7	0.8
			CFM	Rise	CFM	Rise	CFM	Rise	CFM	Rise	CFM	Rise	CFM	CFM	CFM
GDS8 0403A*B	High	3.0	1,353	---	1,290	---	1,246	---	1,199	25	1,149	26	1,116	1,116	1,099
	Med	2.5	1,183	25	1,113	27	1,098	27	1,052	28	1,039	29	1,006	1,012	969
	Med-Lo	2.0	980	30	946	31	920	32	900	33	896	33	885	855	804
	Low	1.5	778	38	762	39	738	40	746	40	738	40	717	696	678
GDS8 0603A*B	High	3.0	1,290	34	1,236	36	1,194	37	1,166	38	1,176	38	1,166	1,108	1,029
	Med	2.5	1,139	39	1,090	41	1,035	43	1,063	42	1,063	42	1020	962	895
	Med-Lo	2.0	962	46	927	48	925	48	941	47	909	49	877	834	779
	Low	1.5	787	56	776	57	763	58	744	60	723	---	690	641	581
GDS8 0804B*B	High	4.0	2,128	---	2,063	---	2,001	---	1,927	---	1,824	---	1,726	1,628	1,529
	Med	3.5	1,840	---	1,788	---	1,745	---	1,689	35	1,625	36	1,550	1,470	1,364
	Med-Lo	3.0	1,602	37	1,558	38	1,543	38	1,493	40	1,455	41	1,402	1,328	1,239
	Low	2.5	1,277	46	1,252	47	1,244	48	1,229	48	1,214	49	1,179	1141	1079
GDS8 1005C*B	High	5.0	2,405	---	2,361	---	2,250	---	2,161	---	2,037	36	1,937	1,808	1,689
	Med	4.0	1,880	39	1,838	40	1,794	41	1,734	43	1,677	44	1,568	1,510	1,401
	Med-Lo	3.5	1659	45	1,630	45	1,587	47	1,537	48	1,492	50	1,445	1,368	1,287
	Low	3.0	1,472	50	1,454	51	1,404	53	1,366	54	1,326	56	1300	1228	1139

[1] at 0.5" ESP

GHS8 Airflow Data

CFM & Temperature Rise vs. External Static Pressure

Model	Motor Speed	Tons AC[1]	External Static Pressure, (Inches Water Column)												
			0.1		0.2		0.3		0.4		0.5		0.6	0.7	0.8
			CFM	Rise	CFM	Rise	CFM	Rise	CFM	Rise	CFM	Rise	CFM	CFM	CFM
GHS8 0403AXB*	High	3.0	1,739	---	1,656	---	1,601	---	1,551	---	1,513	20	1,460	1,413	1,353
	Med	2.5	1,422	21	1,399	21	1,378	22	1,350	22	1,305	23	1,275	1,220	1,178
	Med-Lo	2.0	1,207	25	1,213	24	1,197	25	1,169	25	1,158	26	1,131	1,103	1,068
	Low	1.5	991	30	980	30	958	31	950	31	937	32	924	910	874
GHS8 0604BXB*	High	4.0	2,097	21	2,068	21	2,012	22	1,939	23	1,869	24	1,795	1,718	1,631
	Med	3.5	1,596	28	1,566	28	1,534	29	1,492	30	1,445	31	1,401	1,354	1288
	Med-Lo	3.0	1,380	32	1,356	33	1,328	33	1,303	34	1,274	35	1,239	1,192	1127
	Low	3.0	1239	36	1191	37	1165	37	1133	39	1,104	40	1,082	1,040	996
GHS8 0805CXB*	High	5.0	2,382	---	2,315	---	2,234	---	2,158	---	2,078	---	1,971	1,866	1,762
	Med	4.0	1,622	37	1,603	37	1,583	37	1,556	38	1,516	39	1,482	1,422	1,359
	Med-Lo	3.5	1,436	41	1,391	43	1,387	41	1,356	44	1,325	45	1,279	1,239	1,180
	Low	3.0	1,240	48	1,214	49	1,191	50	1,157	51	1,120	53	1,083	1,052	1,025

[1] at 0.5" ESP

Notes

- CFM in chart is without filter(s). Filters do not ship with this furnace, but must be provided by the installer. If the furnace requires two return filters, this chart assumes both filters are installed.
- All furnaces ship as high-speed cooling and medium-speed heating. Installer must adjust blower cooling and heating speed as needed.
- For most jobs, about 400 CFM per ton when cooling is desirable.
- INSTALLATION IS TO BE ADJUSTED TO OBTAIN TEMPERATURE RISE WITHIN THE RANGE SPECIFIED ON THE RATING PLATE.
- This chart is for information only. For satisfactory operation, external static pressure must not exceed value shown on the rating plate.
- The dashed (----) areas indicate a temperature rise not recommended for this model.
- At higher altitudes, a properly derated unit will have approximately the same temperature rise at a particular CFM, while ESP at the CFM will be lower.

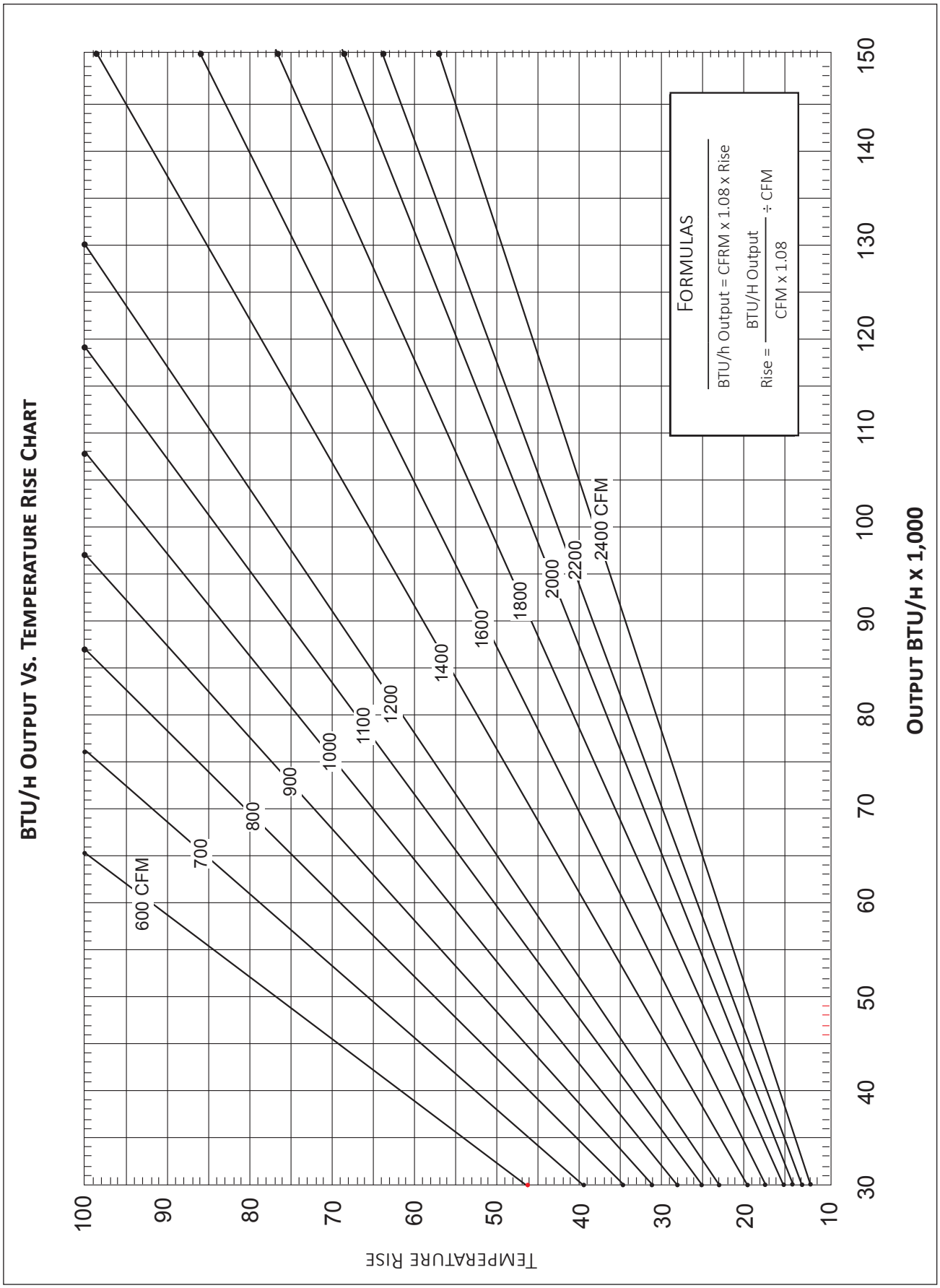
BTU/h Output Vs. Temperature Rise Chart
Formulas
BTU/h Output = CFRM x 1.08 x Rise
Rise = BTU/H Output / CFM x 1.08 ÷ CFM
600 CFM
700
800
900
1000
1100
1200
1400
1600
1800
2000
2200
2400 CFM
Temperature Rise
Output BTU/h x 1,000
100
90
80
70
60
50
40
30
20
10
30
40
50
60
70
80
90
100
110
120
130
140
150

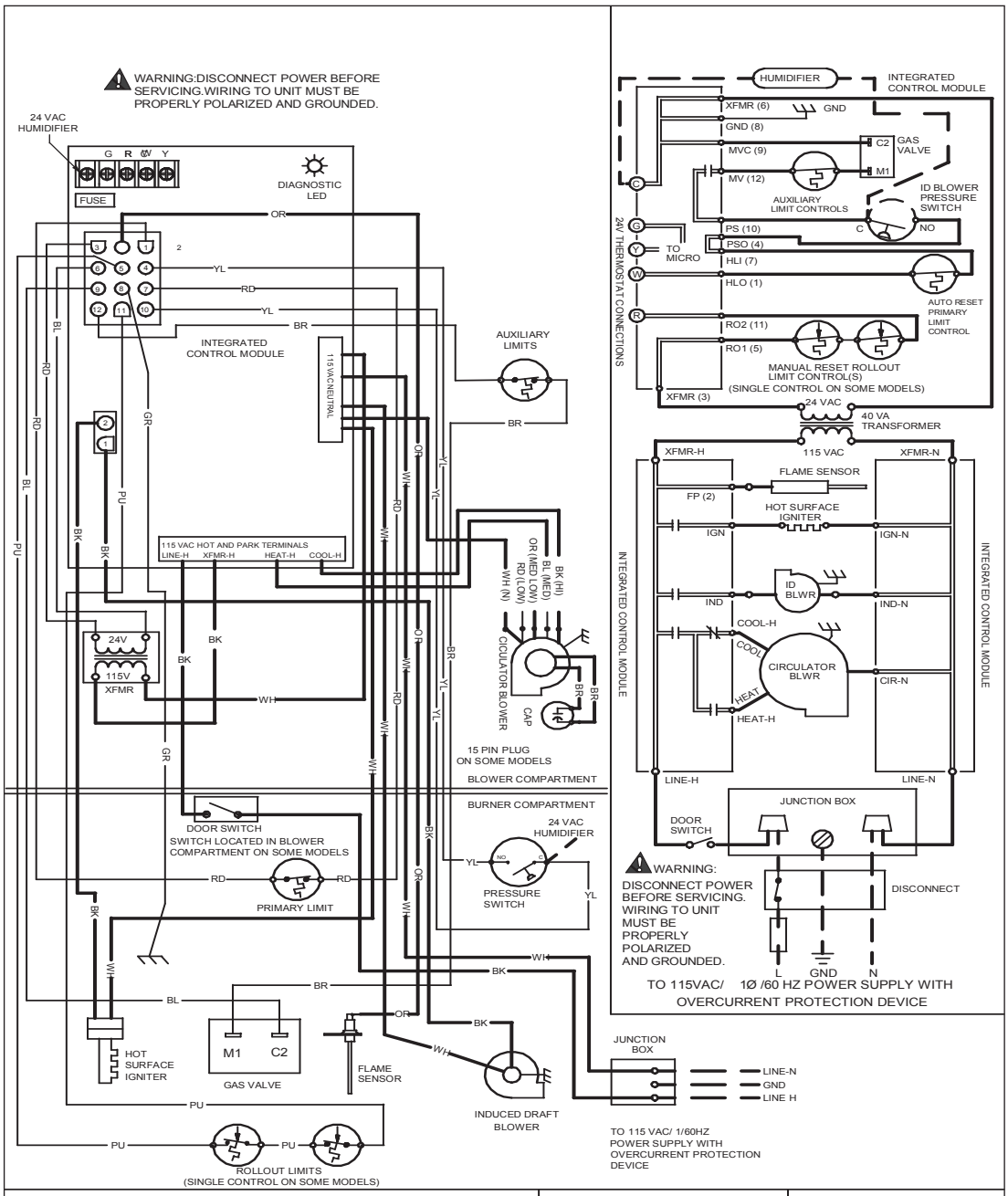

STEADY ON	= NORMAL OPERATION	
OFF	= CONTROL FAILURE	
1 FLASH	= SYSTEM LOCKOUT (RETRIES/RECYCLES EXCEEDED)	
2 FLASHES	= PRESSURE SWITCH STUCK CLOSED	
3 FLASHES	= PRESSURE SWITCH STUCK OPEN	
4 FLASHES	= OPEN HIGH LIMIT	
5 FLASHES	= FLAME SENSE WITHOUT GAS VALVE	
6 FLASHES	= OPEN ROLLOUT	
7 FLASHES	= LOW FLAME SIGNAL	
RAPID FLASHES	= REVERSED 115 VAC POLARITY/VERIFY GND	

LOW VOLTAGE (24V)
LOW VOLTAGE FIELD
HI VOLTAGE (115V)
HI VOLTAGE FIELD
JUNCTION
TERMINAL
INTERNAL TO INTEGRATED CONTROL
PLUG CONNECTION

EQUIPMENT GND
FIELD GND
FIELD SPLICE
SWITCH (TEMP.)
IGNITER
SWITCH (PRESS.)
OVERCURRENT PROT. DEVICE

COLOR CODES:

YL YELLOW	PK PINK
OR ORANGE	BR BROWN
PU PURPLE	WH WHITE
GR GREEN	BL BLUE
BK BLACK	GY GRAY
	RD RED

NOTES:
1. SET HEAT ANTICIPATOR ON ROOM THERMOSTAT AT 0.7 AMPS.
2. MANUFACTURER'S SPECIFIED REPLACEMENT PARTS MUST BE USED WHEN SERVICING.
3. IF ANY OF THE ORIGINAL WIRE AS SUPPLIED WITH THE FURNACE MUST BE REPLACED, IT MUST BE REPLACED WITH WIRING MATERIAL HAVING A TEMPERATURE RATING OF AT LEAST 105 C. USE COPPER CONDUCTORS ONLY.
4. BLOWER SPEEDS MUST BE ADJUSTED BY INSTALLER TO MATCH THE INSTALLATION REQUIREMENTS SO AS TO PROVIDE THE CORRECT HEATING TEMPERATURE RISE AND THE CORRECT COOLING CFM. (SEE SPEC SHEET FOR AIR FLOW CHART)
5. UNIT MUST BE PERMANENTLY GROUNDED AND CONFORM TO N.E.C. AND LOCAL CODES.

0140F00119-C

High Voltage: Disconnect all power before servicing or installing this unit. Multiple power sources may be present. Failure to do so may cause property damage, personal injury, or death.

WARNING

Wiring is subject to change. Always refer to the wiring diagram on the unit for the most up-to-date wiring.

Model	Description
LPT-03 [1]	LP Conversion Kit
HANG20	High-Altitude Natural Gas Kit (4500+ ft)
AFE18-60A	Fossil Fuel Kit
MVK-01 [2]	Masonry Vent Kit
MVK-02 [2]	Masonry Vent Kit (for GMS81205D* & GMS81405D* only)
TK-400	Twinning Kit

[1] White-Rodgers and Honeywell valves
[2] Upflow applications only

Downflow Sub-base for:

Model	Description	GDS8 0403A*B	GDS8 0603A*B	GDS8 0804B*B	GDS8 1005C*B
SBT14	14” Furnace	√	√		
SBT17	17½” Furnace			√	
SBT21	21” Furnace				√

Minimum Filter Sizes

Model #	GMS8 0403A*	GMS8 0603A*	GMS8 0604B*	GMS8 0804B*	GMS8 0805C*	GMS 81005C*	GMS8 1205D*	GMS8 1405D*
Filter Size (in²)	(1) 16 x 25 (Side) or (1) 14 x 24 (Bottom)		(1) 16 x 25 (Side or Bottom)		(1) 16 x 25 (Side or Bottom) [1]	(2) 16 x 25 (Side) or (1) 20 x 25 (Bottom)	(2) 16 x 25 (Side) or (1) 24 x 24 (Bottom)	

Model #	GDS8 0403A*	GDS8 0603A*	GDS8 0804B*	GDS8 1005C*
Filter Size (in²)	(2) 10 x 20 or (1) 14 x 25 (Top Return)		(2) 14xX 20 or (1) 16 x 25 (Top Return)	(2) 14 x 20 or (1) 20 x 25 (Top Return)

Model #	GHS8 0403A*	GHS8 0604B*	GHS8 0805C*
Filter Size (in²)	(1) 16 x 25 (Side) or (1) 14 x 24 (Bottom)	(1) 16 x 25 (Side or Bottom)	1- 16 X 25 (Side or Bottom) [1]

Note: Other size filters of equal or greater surface area may be used; filters may also be centrally located.

[1] Use 2- 16 x 25 filters on side returns or 20 x 25 filter on bottom return if furnace is connected to a cooling unit over 4 tons nominal capacity.

The manufacturing entity reserves the right to discontinue or change the specifications or design at any time without notice and without incurring any obligations.