GMES80/GCES80

Heating Input : 40,000–120,000 BTU/h

Single-Stage, Multi-Speed ECM, Multi-Position Gas Furnace 80% AFUE

Contents

Nomenclature 2
Product Specifications 3
Dimensions 5
Airflow Data 7
Wiring Diagrams 15
Accessories 16
Minimum Filter Sizes 16

Standard Features

- Heavy-duty aluminized-steel, dual-diameter tubular heat exchanger
- Single-stage gas valve
- Durable Hot-surface igniter
- Quiet, single-speed draft induced
- Self-diagnostic control board
- Color-coded low-voltage terminals
- Multi-speed ECM blower motor
- California Low NOx emissions models available
- Can no longer be installed in California's South Coast Air Quality Management District (SCAQMD) on or after October 1, 2019.
- AHRI Certified; ETL Listed

Cabinet Features

- Installation:
  - GMES80-upflow, horizontal left or right
  - GCES80- downflow, horizontal left or right
- Convenient left or right connection for gas and electrical service
- Heavy-gauge steel cabinet with durable baked-enamel finish
- Foil faced insulated heat exchanger

LIFETIME HEAT EXCHANGER LIMITED WARRANTY* | 2 YEAR UNIT REPLACEMENT LIMITED WARRANTY* | 10 YEAR PARTS LIMITED WARRANTY* | Intertek | AHRI CERTIFIED | COMPANY WITH QUALITY SYSTEM CERTIFIED BY DNV GL = ISO 9001 = | COMPANY WITH ENVIRONMENTAL SYSTEM CERTIFIED BY DNV GL = ISO 14001 =

* Complete warranty details available from your local dealer or at www.goodmanmfg.com. To receive the Lifetime Heat Exchanger Limited Warranty (good for as long as you own your home), 2-Year Unit Replacement Limited Warranty and 10-Year Parts Limited Warranty, online registration must be completed within 60 days of installation. Online registration is not required in California or Quebec.

G	M	V	C	80	040	4	C	*	**
1	2	3	4	5,6	7,8,9	10	11	12	13,14

BRAND

G- Franklin® Brand

CONFIGURATION

M- Upflow/Horizontal

C- Downflow/Horizontal

MOTOR

V- Variable Speed ECM / ComfortBridge™

E- Multi-Speed ECM S- Single Speed

GAS VALVE

M- Modulating S- Single Stage

C- Two Stage

AFUE

80- 80% AFUE

MBTU/H

040- 40,000 BTU/h 100- 100,000 BTU/h

060- 60,000 BTU/h 120- 120,000 BTU/h

080- 80,000 BTU/h 140- 140,000 BTU/h

MAXIMUM CFM

2- 800 CFM 4- 1600 CFM

3- 1200 CFM 5- 2000 CFM

CABINET WIDTH

A- 14" C- 21"

B- 17½" D- 24½"

NOX

N- Natural Gas

X- Low NOx

ENGINEERING

Major /Minor Revisions

* Not used for inventory control.

	GMES8 00403A*	GMES8 00603A*	GMES80 0603B*	GMES8 00604B*	GMES8 00803B*	GMES8 00804B*	GMES8 00804C*	GMES8 00805C*	GMES8 01005C*	GMES8 01205D*
Heating Capacity										
Input	40,000	60,000	60,000	60,000	80,000	80,000	80,000	80,000	100,000	120,000
Natural Gas Output	32,000	48,000	48,000	48,000	64,000	64,000	64,000	64,000	80,000	96,000
LP Gas Output	32,000	48,000	48,000	48,000	64,000	64,000	64,000	64,000	80,000	96,000
AFUE [1]	80	80	80	80	80	80	80	80	80	80
Available AC @ 0.5” ESP	3	3	3	4	3	4	4	5	5	5
Temperature Rise Range (°F)	25-55	20-50	20-50	20-50	35-65	35-65	35-65	35-65	35-65	40-70
Circulator Blower										
Size (D x W)	10" x 6"	10" x 6"	10" x 8"	10" x 8"	10" x 8"	10" x 8"	10" x 10"	10" x 10"	10" x 10"	11" x 10"
Horsepower @1075 RPM	0.5	0.5	0.5	0.75	0.5	0.75	0.75	0.75	0.75	1
Speed	5	5	5	5	5	5	5	5	5	5
Vent Diameter [2]	4"	4"	4"	4"	4"	4"	4"	4"	4"	4"
No. of Burners	2	3	3	3	4	4	4	4	5	6
Electrical Data										
Min. Circuit Ampacity [3]	8.7	8.7	8.7	12.45	8.7	12.45	12.45	12.45	12.45	15.3
Max. Overcurrent Device (amps) [4]	15	15	15	15	15	15	15	15	15	20
Ship Weight (lbs)	86	90	100	108	116	120	132	132	132	132

[1] DOE AFUE based upon Isolated Combustion System (ICS)

[2] Vent and combustion air diameters may vary depending upon vent length. Refer to the latest editions of the National Fuel Gas Code NFPA 54/ANSI Z223.1 (in the USA) and the Canada National Standard of Canada, CAN/CSA B149.1 and CAN/CSA B142.2 (in Canada).

[3] Minimum Circuit Ampacity = (1.25 x Circulator Blower Amps) + ID Blower amps. Wire size should be determined in accordance with National Electrical Codes. Extensive wire runs will require larger wire sizes.

[4] Maximum Overcurrent Protection Device refers to maximum recommended fuse or circuit breaker size. May use fuses or HACR-type circuit breakers of the same size as noted.

Notes

- All furnaces are manufactured for use on 115 VAC, 60 Hz, single-phase electrical supply.
- Gas Service Connection ½” FPT
- Important: Size fuses and wires properly and make electrical connections in accordance with the National Electrical Code and/or all existing local codes.

	GCES8 00403A*	GCES8 00603A*	GCES8 00804B*	GCES8 00805C*	GCES8 01005C*
Heating Capacity					
Input	40,000	60,000	80,000	80,000	100,000
Natural Gas Output	32,000	48,000	64,000	64,000	80,000
LP Gas Output	32,000	48,000	64,000	64,000	80,000
AFUE [1]	80	80	80	80	80
Available AC @ 0.5” ESP	3	3	4	5	5
Temperature Rise Range (°F)	25-55	30-60	35-65	30-60	40-70
Circulator Blower					
Size (D x W)	10" X 6"	10" X 6"	10" X 8"	10" X 10"	10" X 10"
Horsepower @1075 RPM	1/2	1/2	3/4	1	1
Speed	5	5	5	5	5
Vent Diameter [2]	4"	4"	4"	4"	4"
No. of Burners	2	3	4	4	5
Electrical Data					
Min. Circuit Ampacity [3]	8.7	8.7	12.45	15.3	15.3
Max. Overcurrent Device (amps) [4]	15	15	15	20	20
Ship Weight (lbs)	90	94	107	115	115

[1] DOE AFUE based upon Isolated Combustion System (ICS)

[2] Vent and combustion air diameters may vary depending upon vent length. Refer to the latest editions of the National Fuel Gas Code NFPA 54/ANSI Z223.1 (in the USA) and the Canada National Standard of Canada, CAN/CSA B149.1 and CAN/CSA B142.2 (in Canada).

[3] Minimum Circuit Ampacity = (1.25 x Circulator Blower Amps) + ID Blower amps. Wire size should be determined in accordance with National Electrical Codes. Extensive wire runs will require larger wire sizes.

[4] Maximum Overcurrent Protection Device refers to maximum recommended fuse or circuit breaker size. May use fuses or HACR-type circuit breakers of the same size as noted.

Notes

- All furnaces are manufactured for use on 115 VAC, 60 Hz, single-phase electrical supply.
- Gas Service Connection ½” FPT
- Important: Size fuses and wires properly and make electrical connections in accordance with the National Electrical Code and/or all existing local codes.

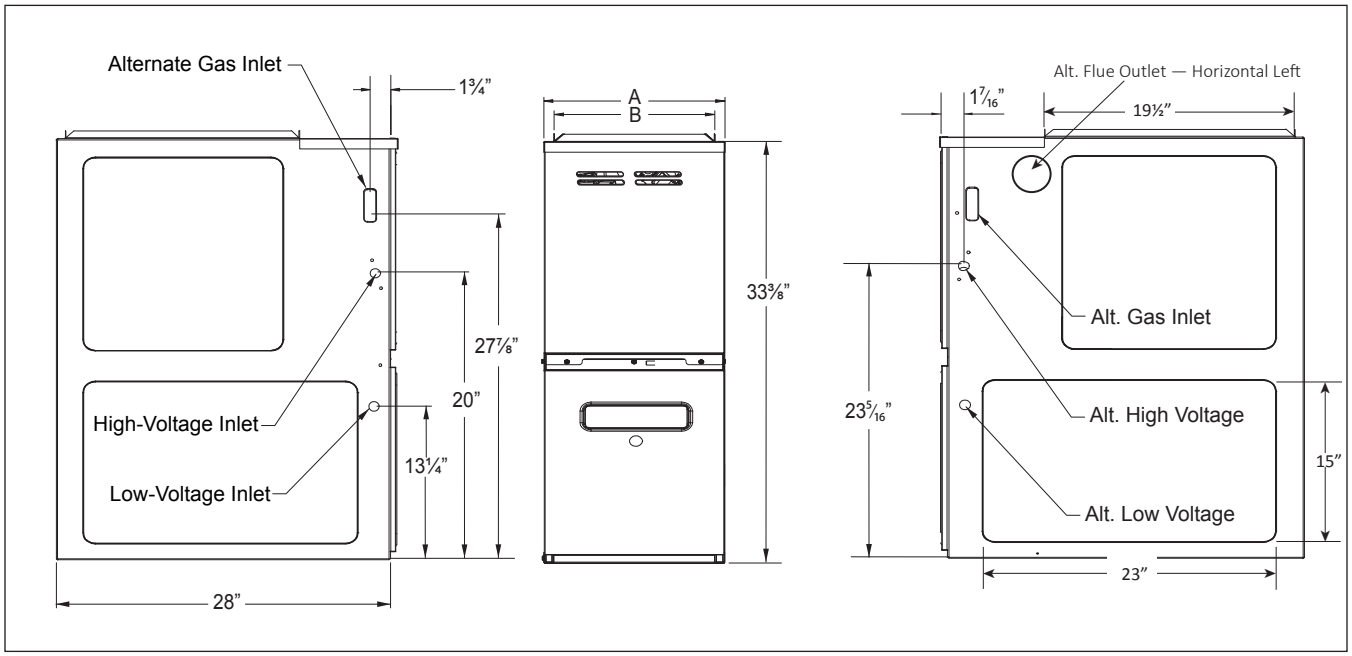

Model	A	B
GMES800403A*	14”	12½”
GMES800603A*	14”	12½”
GMES800603B*	17½”	16”
GMES800604B*	17½”	16”
GMES800803B*	17½”	16”

Model	A	B
GMES800804B*	17½”	16”
GMES800804C*	21”	19½”
GMES800805C*	21”	19½”
GMES801005C*	21”	19½”
GMES801205D*	24½”	23”

Notes

- Line voltage wiring can enter through the right or left side of furnace.
  Low-voltage wiring can enter through the right or left side of furnace.
- Conversion kits for high-altitude (4500+ ft) natural gas operation are available.
  Contact your Goodman distributor or dealer for details.
- Installer must supply the following gas line fittings, according to which entrance is used:
  Left: One 90º street elbow; one 2½” pipe nipple; one 90º elbow; straight pipe; one ground joint union
  Right: Straight pipe to reach gas valve

Minimum Clearances to Combustible Materials

Sides	Rear	Front[1]	Vent[2]		Top
			SW	B	
1”	0”	3”	6”	1”	1”

[1] 24” clearance for serviceability recommended.

[2] Single Wall Vent (SW) to be used only as a connector. Refer to the latest editions of the National Fuel Gas Code NFPA 54/ ANSI Z223.1 (in the USA) and the Canada National Standard of Canada, CAN/CSA B149.1 and CAN/CSA B142.2 (in Canada).

Note: GMES80 approved for line contact in the horizontal position.

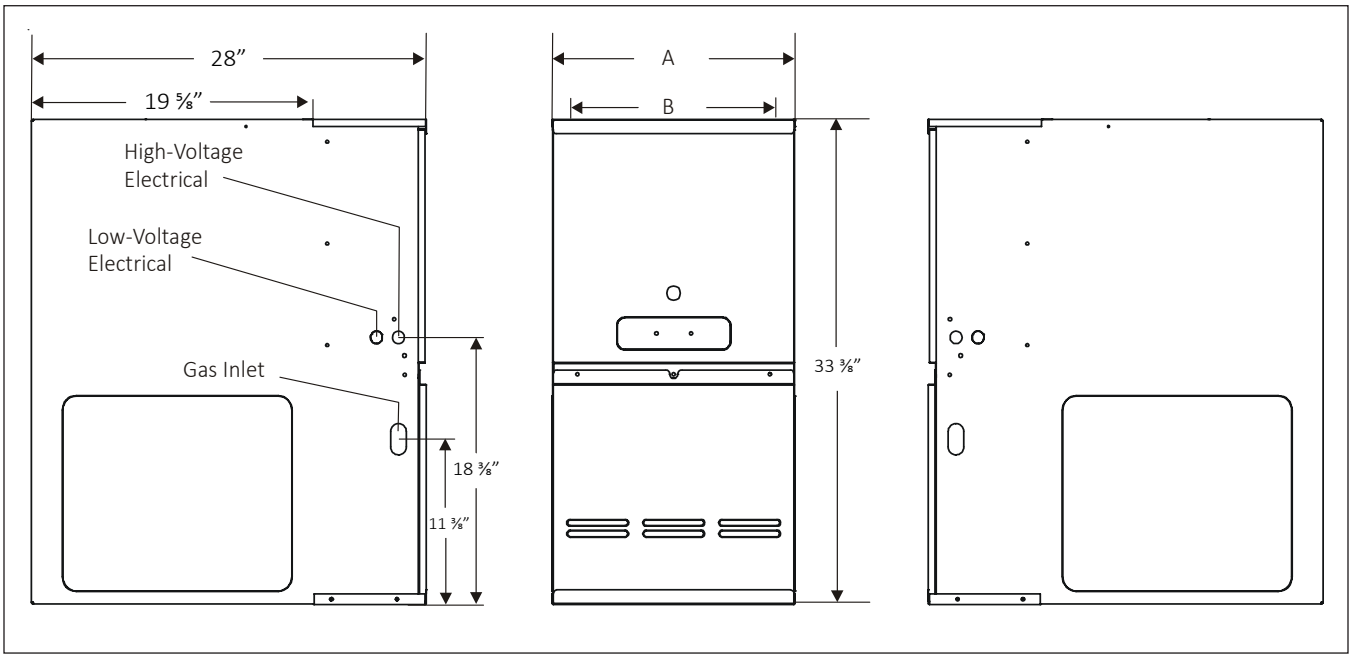

Model	A	B	Non-Combustible Floor Base
GCES800403A*	14”	12½”	SBT14
GCES800603A*	14”	12½”	SBT14
GCES800804B*	17½”	16”	SBT17
GCES800805C*	21”	19½”	SBT17
GCES801005C*	21”	19½”	SBT21

Notes

- Line voltage wiring can enter through the right or left side of furnace. Low-voltage wiring can enter through the right or left side of furnace.
- Conversion kits for high-altitude (4500+ ft) natural gas operation are available. Contact your Goodman distributor or dealer for details.

Minimum Clearances to Combustible Materials

Sides	Rear	Front[1]	Vent[2]		Top
			SW	B	
1”	0”	3”	6”	1”	1”

[1] 24” clearance for serviceability recommended.

[2] Single Wall Vent (SW) to be used only as a connector. Refer to the latest editions of the National Fuel Gas Code NFPA 54/ ANSI Z223.1 (in the USA) and the Canada National Standard of Canada, CAN/CSA B149.1 and CAN/CSA B142.2 (in Canada).

Note: GMES80 approved for line contact in the horizontal position.

CFM & Temperature Rise vs. External Static Pressure

Model	DIP Switches S2-1 , S2-2	External Static Pressure, (Inches Water Column)															
		0.1		0.2		0.3		0.4		0.5		0.6		0.7		0.8	
		CFM	Rise	CFM	Rise	CFM	Rise	CFM	Rise	CFM	Rise	CFM	Rise	CFM	Rise	CFM	Rise
GMES80 0403A*	OFF OFF	658	45	603	49	550	54	495	60	441	67	388	76	331	90	286	104
	ON OFF*	750	40	703	42	651	46	600	49	553	54	504	59	456	65	409	72
	ON ON	923	32	865	34	824	36	802	37	759	39	715	41	674	44	631	47
	OFF ON**	1138	N/A	1093	N/A	1057	N/A	1016	N/A	981	N/A	945	N/A	912	N/A	876	N/A
GMES80 0603A*	OFF OFF	681	65	617	72	566	79	511	87	458	97	405	110	358	124	311	143
	ON OFF*	1328	33	1274	35	1231	36	1192	37	1155	38	1114	40	1081	41	1047	42
	ON ON	964	46	906	49	856	52	810	55	788	56	745	60	702	63	662	67
	OFF ON	1151	39	1091	41	1050	42	1007	44	964	46	926	48	885	50	850	52
GMES80 0603B*	OFF OFF	752	59	678	66	608	73	547	81	474	94	403	110	335	133	263	169
	ON OFF*	1330	33	1280	35	1229	36	1187	37	1146	39	1103	40	1061	42	1018	44
	ON ON	1155	38	1100	40	1048	42	1002	44	952	47	907	49	861	52	816	54
	OFF ON**	1418	N/A	1376	N/A	1333	N/A	1288	N/A	1248	N/A	1206	N/A	1163	N/A	1124	N/A
GMES80 0604B*	OFF OFF	757	59	683	65	618	72	558	80	486	91	414	107	354	126	278	160
	ON OFF*	1320	34	1264	35	1217	37	1171	38	1131	39	1091	41	1049	42	1007	44
	ON ON	1406	32	1358	33	1314	34	1267	35	1226	36	1205	37	1189	37	1147	39
	OFF ON**	1590	N/A	1542	N/A	1499	N/A	1454	N/A	1418	N/A	1413	N/A	1390	N/A	1356	N/A
GMES80 0803B*	OFF OFF	706	84	631	94	563	105	486	122	404	147	338	175	280	212	232	255
	ON OFF*	1231	48	1185	50	1136	52	1093	54	1049	56	1004	59	956	62	908	65
	ON ON	1133	52	1009	59	956	62	903	66	856	69	804	74	774	77	722	82
	OFF ON	1160	51	1107	54	1060	56	1011	59	965	61	920	64	868	68	818	72
GMES80 0804B*	OFF OFF	743	80	668	89	599	99	522	114	432	137	366	162	312	190	258	230
	ON OFF*	1408	42	1369	43	1319	45	1282	46	1242	48	1219	49	1193	50	1150	52
	ON ON	1179	50	1123	53	1073	55	1025	58	972	61	949	62	924	64	869	68
	OFF ON**	1574	N/A	1521	N/A	1481	N/A	1439	N/A	1398	N/A	1374	N/A	1335	N/A	1295	N/A
GMES80 0804C*	OFF OFF	822	72	754	79	652	91	566	105	499	119	428	138	346	171	294	202
	ON OFF*	1352	44	1281	46	1218	49	1152	51	1076	55	1026	58	964	61	901	66
	ON ON	1466	40	1399	42	1347	44	1290	46	1230	48	1170	51	1112	53	1054	56
	OFF ON**	1669	N/A	1595	N/A	1527	N/A	1463	N/A	1407	N/A	1363	N/A	1336	N/A	1289	N/A
GMES80 0805C*	OFF OFF	822	72	754	79	652	91	566	105	499	119	428	138	346	171	294	202
	ON OFF*	1352	44	1281	46	1218	49	1152	51	1076	55	1026	58	964	61	901	66
	ON ON**	1669	N/A	1595	N/A	1527	N/A	1463	N/A	1407	N/A	1402	N/A	1363	N/A	1336	N/A
	OFF ON**	1904	N/A	1832	N/A	1777	N/A	1727	N/A	1678	N/A	1630	N/A	1579	N/A	1523	N/A
GMES80 1005C*	OFF OFF	789	94	719	103	637	116	545	136	458	162	378	196	324	229	273	271
	ON OFF*	1567	47	1516	49	1466	51	1423	52	1388	53	1342	55	1293	57	1243	60
	ON ON	1424	52	1378	54	1330	56	1274	58	1226	60	1172	63	1119	66	1071	69
	OFF ON**	1810	N/A	1764	N/A	1718	N/A	1682	N/A	1633	N/A	1596	N/A	1549	N/A	1510	N/A
GMES80 1205D*	OFF OFF	815	109	742	120	662	134	590	151	503	177	422	211	362	246	299	297
	ON OFF*	1701	52	1641	54	1591	56	1544	58	1497	59	1453	61	1408	63	1372	65
	ON ON	1434	62	1388	64	1336	67	1281	69	1230	72	1202	74	1178	75	1121	79
	OFF ON**	1831	N/A	1770	N/A	1723	N/A	1677	N/A	1630	N/A	1590	N/A	1547	N/A	1506	N/A

[1] at 0.5" ESP

Notes:

- CFM in chart is without filter(s). Filters do not ship with this furnace, but must be provided by the installer. If the furnace requires two return filters, this chart assumes both filters are installed.
- All furnaces ship as high-speed cooling and medium-speed heating. Installer must adjust blower cooling and heating speed as needed.
- For most jobs, about 400 CFM per ton when cooling is desirable.
- INSTALLATION IS TO BE ADJUSTED TO OBTAIN TEMPERATURE RISE WITHIN THE RANGE SPECIFIED ON THE RATING PLATE.
- This chart is for information only. For satisfactory operation, external static pressure must not exceed value shown on the rating plate.
- The dashed (----) areas indicate a temperature rise not recommended for this model.
- At higher altitudes, a properly derated unit will have approximately the same temperature rise at a particular CFM, while ESP at the CFM will be lower.

CFM & Temperature Rise vs. External Static Pressure

Model	DIP Switches S2-3 , S2-4	External Static Pressure, (Inches Water Column)									
		0.1	0.2	0.3	0.4	0.5	0.6	0.7	0.8	0.9	1
		CFM	CFM	CFM	CFM	CFM	CFM	CFM	CFM	CFM	CFM
GMES80 0403A*	OFF OFF*	658	603	550	495	441	388	331	286	238	198
	ON OFF	750	703	651	600	553	504	456	409	362	322
	OFF ON	1138	1093	1057	1016	981	945	912	876	836	744
	ON ON	1367	1321	1286	1255	1223	1190	1160	1133	1099	1068
GMES80 0603A*	OFF OFF*	681	617	566	511	458	405	358	311	265	215
	ON OFF	1328	1274	1231	1192	1155	1114	1081	1047	1013	978
	OFF ON	1151	1091	1050	1007	964	926	885	850	813	800
	ON ON	1389	1341	1295	1258	1221	1176	1140	1105	1076	1043
GMES80 0603B*	OFF OFF*	752	678	608	547	474	403	335	263	232	195
	ON OFF	1330	1280	1229	1187	1146	1103	1061	1018	977	936
	OFF ON	1418	1376	1333	1288	1248	1206	1163	1124	1085	1050
	ON ON	1465	1416	1382	1340	1299	1257	1219	1181	1142	1106
GMES80 0604B*	OFF OFF*	757	683	618	558	486	414	354	278	237	204
	ON OFF	1320	1264	1217	1171	1131	1091	1049	1007	965	923
	OFF ON	1590	1542	1499	1454	1418	1390	1356	1321	1282	1245
	ON ON	1804	1757	1712	1676	1637	1600	1566	1529	1501	1466
GMES80 0803B*	OFF OFF*	706	631	563	486	404	338	280	232	194	118
	ON OFF	1231	1185	1136	1093	1049	1004	956	908	862	835
	OFF ON	1160	1107	1060	1011	965	920	868	818	794	741
	ON ON	1402	1358	1317	1274	1234	1195	1154	1113	1069	1033
GMES80 0804B*	OFF OFF*	743	668	599	522	432	366	312	258	213	158
	ON OFF	1408	1369	1319	1282	1242	1193	1150	1109	1069	1025
	OFF ON	1574	1521	1481	1439	1398	1374	1335	1295	1259	1219
	ON ON	1810	1756	1711	1675	1637	1602	1569	1536	1500	1462
GMES80 0804C*	OFF OFF*	822	754	652	466	499	428	346	294	246	202
	ON OFF	1352	1281	1218	1152	1076	1026	964	901	833	790
	OFF ON	1669	1595	1527	1463	1407	1363	1336	1289	1238	1190
	ON ON	1904	1932	1777	1727	1678	1630	1579	1523	1469	1426
GMES80 0805C*	OFF OFF*	822	754	652	466	499	428	346	294	246	202
	ON OFF	1352	1281	1218	1152	1076	1026	964	901	833	790
	OFF ON	1904	1932	1777	1727	1678	1630	1579	1523	1469	1426
	ON ON	2202	2137	2080	2033	1985	1947	1903	1859	1791	1721
GMES80 1005C*	OFF OFF*	789	719	637	545	458	378	324	273	222	179
	ON OFF	1567	1516	1466	1423	1388	1342	1293	1243	1195	1146
	OFF ON	1810	1764	1718	1682	1633	1596	1549	1510	1466	1425
	ON ON	2111	2085	2052	2027	1988	1968	1949	1917	1876	1840
GMES80 1205D*	OFF OFF*	815	742	662	590	503	422	362	299	232	179
	ON OFF	1701	1641	1591	1544	1497	1453	1408	1372	1340	1295
	OFF ON	1831	1770	1723	1677	1630	1593	1547	1506	1464	1416
	ON ON	2226	2165	2126	2083	2048	2011	1983	1945	1905	1875

[1] at 0.5” ESP

Notes:

- CFM in chart is without filter(s). Filters do not ship with this furnace, but must be provided by the installer. If the furnace requires two return filters, this chart assumes both filters are installed.
- All furnaces ship as high-speed cooling and medium-speed heating. Installer must adjust blower cooling and heating speed as needed.

CFM & Temperature Rise vs. External Static Pressure

Model	DIP Switches S1-1, S1-2, S1-3	External Static Pressure, (Inches Water Column)									
		0.1	0.2	0.3	0.4	0.5	0.6	0.7	0.8	0.9	1
		CFM	CFM	CFM	CFM	CFM	CFM	CFM	CFM	CFM	CFM
GMES80 0403A*	OFF OFF OFF	658	603	550	495	441	388	331	286	238	198
	OFF ON ON	658	603	550	495	441	388	331	286	238	198
	ON OFF ON	658	603	550	495	441	388	331	286	238	198
	ON ON ON	658	603	550	495	441	388	331	286	238	198
	ON OFF OFF	750	703	651	600	553	504	456	409	362	322
	ON ON OFF	923	865	824	802	759	715	674	631	597	551
	OFF ON OFF	1138	1093	1057	1016	981	945	912	876	836	744
	OFF OFF ON*	1367	1321	1286	1255	1223	1190	1160	1133	1099	1068
GMES80 0603A*	OFF OFF OFF	681	617	566	511	458	405	358	311	265	215
	OFF ON ON	681	617	566	511	458	405	358	311	265	215
	ON OFF ON	681	617	566	511	458	405	358	311	265	215
	ON ON ON	681	617	566	511	458	405	358	311	265	215
	ON OFF OFF	1328	1274	1231	1192	1155	1114	1081	1047	1013	978
	ON ON OFF	964	906	856	810	788	745	702	662	622	588
	OFF ON OFF	1151	1091	1050	1007	964	926	885	850	813	800
	OFF OFF ON*	1389	1341	1295	1258	1221	1176	1140	1105	1076	1043
GMES80 0603B*	OFF OFF OFF	752	678	608	547	474	403	335	263	232	195
	OFF ON ON	752	678	608	547	474	403	335	263	232	195
	ON OFF ON	752	678	608	547	474	403	335	263	232	195
	ON ON ON	752	678	608	547	474	403	335	263	232	195
	ON OFF OFF	1330	1280	1229	1187	1146	1103	1061	1018	977	936
	ON ON OFF	1155	1100	1048	1002	952	907	861	816	789	741
	OFF ON OFF	1418	1376	1333	1288	1248	1206	1163	1124	1085	1050
	OFF OFF ON*	1465	1416	1382	1340	1299	1257	1219	1181	1142	1106
GMES80 0604B*	OFF OFF OFF	757	683	618	558	486	414	354	278	237	204
	OFF ON ON	757	683	618	558	486	414	354	278	237	204
	ON OFF ON	757	683	618	558	486	414	354	278	237	204
	ON ON ON	757	683	618	558	486	414	354	278	237	204
	ON OFF OFF	1320	1264	1217	1171	1131	1091	1049	1007	965	923
	ON ON OFF	1406	1358	1314	1267	1226	1189	1147	1108	1070	1031
	OFF ON OFF	1590	1542	1499	1454	1418	1390	1356	1321	1282	1245
	OFF OFF ON*	1804	1757	1712	1676	1637	1600	1566	1529	1501	1466
GMES80 0803B*	OFF OFF OFF	706	631	563	486	404	338	280	232	194	118
	OFF ON ON	706	631	563	486	404	338	280	232	194	118
	ON OFF ON	706	631	563	486	404	338	280	232	194	118
	ON ON ON	706	631	563	486	404	338	280	232	194	118
	ON OFF OFF	1231	1185	1136	1093	1049	1004	956	908	862	835
	ON ON OFF	1133	1009	956	903	856	804	774	722	661	606
	OFF ON OFF	1160	1107	1060	1011	965	920	868	818	794	741
	OFF OFF ON*	1402	1358	1317	1274	1234	1195	1154	1113	1069	1033

Model	DIP Switches S1-1, S1-2, S1-3	External Static Pressure, (Inches Water Column)									
		0.1	0.2	0.3	0.4	0.5	0.6	0.7	0.8	0.9	1
		CFM	CFM	CFM	CFM	CFM	CFM	CFM	CFM	CFM	CFM
GMES80 0804B*	OFF OFF OFF	743	668	599	522	432	366	312	258	213	158
	OFF ON ON	743	668	599	522	432	366	312	258	213	158
	ON OFF ON	743	668	599	522	432	366	312	258	213	158
	ON ON ON	743	668	599	522	432	366	312	258	213	158
	ON OFF OFF	1408	1369	1319	1282	1242	1193	1150	1109	1069	1025
	ON ON OFF	1179	1123	1073	1025	972	924	869	818	782	719
	OFF ON OFF	1574	1521	1481	1439	1398	1374	1335	1295	1259	1219
	OFF OFF ON*	1810	1756	1711	1675	1637	1602	1569	1536	1500	1462
GMES80 0804C*	OFF OFF OFF	822	754	652	466	499	428	346	294	246	202
	OFF ON ON	822	754	652	466	499	428	346	294	246	202
	ON OFF ON	822	754	652	466	499	428	346	294	246	202
	ON ON ON	822	754	652	466	499	428	346	294	246	202
	ON OFF OFF	1352	1281	1218	1152	1076	1026	964	901	833	790
	ON ON OFF	1669	1595	1527	1463	1407	1363	1336	1289	1238	1190
	OFF ON OFF	1669	1595	1527	1463	1407	1363	1336	1289	1238	1190
	OFF OFF ON*	1904	1932	1777	1727	1678	1630	1579	1523	1469	1426
GMES80 0805C*	OFF OFF OFF	822	754	652	466	499	428	346	294	246	202
	OFF ON ON	822	754	652	466	499	428	346	294	246	202
	ON OFF ON	822	754	652	466	499	428	346	294	246	202
	ON ON ON	822	754	652	466	499	428	346	294	246	202
	ON OFF OFF	1352	1281	1218	1152	1076	1026	964	901	833	790
	ON ON OFF	1669	1595	1527	1463	1407	1363	1336	1289	1238	1190
	OFF ON OFF	1904	1932	1777	1727	1678	1630	1579	1523	1469	1426
	OFF OFF ON*	2202	2137	2080	2033	1985	1947	1903	1859	1791	1721
GMES80 1005C*	OFF OFF OFF	789	719	637	545	458	378	324	273	222	179
	OFF ON ON	789	719	637	545	458	378	324	273	222	179
	ON OFF ON	789	719	637	545	458	378	324	273	222	179
	ON ON ON	789	719	637	545	458	378	324	273	222	179
	ON OFF OFF	1567	1516	1466	1423	1388	1342	1293	1243	1195	1146
	ON ON OFF	1424	1378	1330	1274	1226	1172	1119	1071	1023	972
	OFF ON OFF	1810	1764	1718	1682	1633	1596	1549	1510	1466	1425
	OFF OFF ON*	2111	2085	2052	2027	1988	1968	1949	1917	1876	1840
GMES80 1205D*	OFF OFF OFF	815	742	662	590	503	422	362	299	232	179
	OFF ON ON	815	742	662	590	503	422	362	299	232	179
	ON OFF ON	815	742	662	590	503	422	362	299	232	179
	ON ON ON	815	742	662	590	503	422	362	299	232	179
	ON OFF OFF	1701	1641	1591	1544	1497	1453	1408	1372	1340	1295
	ON ON OFF	1434	1388	1336	1281	1230	1178	1121	1063	1017	964
	OFF ON OFF	1831	1770	1723	1677	1630	1593	1547	1506	1464	1416
	OFF OFF ON*	2226	2165	2126	2083	2048	2011	1983	1945	1905	1875

[1] at 0.5" ESP

Notes:

- CFM in chart is without filter(s). Filters do not ship with this furnace, but must be provided by the installer. If the furnace requires two return filters, this chart assumes both filters are installed.
- All furnaces ship as high-speed cooling and medium-speed heating. Installer must adjust blower cooling and heating speed as needed.
- For most jobs, about 400 CFM per ton when cooling is desirable.
- INSTALLATION IS TO BE ADJUSTED TO OBTAIN TEMPERATURE RISE WITHIN THE RANGE SPECIFIED ON THE RATING PLATE.
- This chart is for information only. For satisfactory operation, external static pressure must not exceed value shown on the rating plate.
- The dashed (----) areas indicate a temperature rise not recommended for this model.
- At higher altitudes, a properly derated unit will have approximately the same temperature rise at a particular CFM, while ESP at the CFM will be lower

CFM & Temperature Rise vs. External Static Pressure

Model	DIP Switches S2-1 , S2-2	External Static Pressure, (Inches Water Column)															
		0.1		0.2		0.3		0.4		0.5		0.6		0.7		0.8	
		CFM	Rise	CFM	Rise	CFM	Rise	CFM	Rise	CFM	Rise	CFM	Rise	CFM	Rise	CFM	Rise
GCES80 0403A*	OFF OFF	668	44	650	46	600	49	555	53	507	58	459	65	411	72	352	84
	ON OFF*	785	38	754	39	736	40	690	43	650	46	604	49	565	52	527	56
	ON ON	862	34	827	36	823	36	787	38	770	38	733	40	692	43	655	45
	OFF ON**	1104	N/A	1058	N/A	1020	N/A	1022	N/A	1013	N/A	981	N/A	952	N/A	918	N/A
GCES80 0603A*	OFF OFF	716	62	647	69	592	75	541	82	478	93	420	106	368	121	296	150
	ON OFF*	1054	42	1002	44	951	47	906	49	861	52	820	54	797	56	754	59
	ON ON	960	46	900	49	854	52	802	55	782	57	735	60	695	64	639	70
	OFF ON	1160	N/A	1102	N/A	1055	N/A	1017	N/A	970	N/A	930	N/A	891	N/A	847	N/A
GCES80 0804B*	OFF OFF	784	76	716	83	645	92	583	102	516	115	405	146	334	177	282	210
	ON OFF*	1295	46	1252	47	1203	49	1153	51	1114	53	1071	55	1022	58	981	60
	ON ON	1401	N/A	1366	N/A	1320	N/A	1278	N/A	1236	N/A	1213	N/A	1194	N/A	1153	N/A
	OFF ON**	1596	N/A	1553	N/A	1512	N/A	1491	N/A	1450	N/A	1411	N/A	1388	N/A	1347	N/A
GCES80 0805C*	OFF OFF	1171	51	884	67	667	89	576	103	495	120	399	149	338	175	302	196
	ON OFF*	1175	50	1098	54	1024	58	947	63	883	67	823	72	764	78	703	84
	ON ON	1436	N/A	1402	N/A	1362	N/A	1313	N/A	1244	N/A	1182	N/A	1132	N/A	1079	N/A
	OFF ON**	1782	N/A	1744	N/A	1715	N/A	1700	N/A	1660	N/A	1619	N/A	1579	N/A	1510	N/A
GCES80 1005C*	OFF OFF	803	92	719	103	631	117	540	137	471	157	337	220	298	249	265	280
	ON OFF**	1424	52	1385	53	1332	56	1284	58	1229	60	1176	63	1130	66	1078	69
	ON ON	1626	N/A	1574	N/A	1524	N/A	1479	N/A	1433	N/A	1410	N/A	1400	N/A	1358	N/A
	OFF ON**	1820	N/A	1769	N/A	1726	N/A	1685	N/A	1642	N/A	1603	N/A	1557	N/A	1521	N/A

[1] at 0.5” ESP

Notes:

- CFM in chart is without filter(s). Filters do not ship with this furnace, but must be provided by the installer. If the furnace requires two return filters, this chart assumes both filters are installed.
- All furnaces ship as high-speed cooling and medium-speed heating. Installer must adjust blower cooling and heating speed as needed.
- For most jobs, about 400 CFM per ton when cooling is desirable.
- INSTALLATION IS TO BE ADJUSTED TO OBTAIN TEMPERATURE RISE WITHIN THE RANGE SPECIFIED ON THE RATING PLATE.
- This chart is for information only. For satisfactory operation, external static pressure must not exceed value shown on the rating plate.
- The dashed (----) areas indicate a temperature rise not recommended for this model.
- At higher altitudes, a properly derated unit will have approximately the same temperature rise at a particular CFM, while ESP at the CFM will be lower.

CFM & Temperature Rise vs. External Static Pressure

Model	DIP Switches S2-3 , S2-4	External Static Pressure, (Inches Water Column)									
		0.1	0.2	0.3	0.4	0.5	0.6	0.7	0.8	0.9	1
		CFM	CFM	CFM	CFM	CFM	CFM	CFM	CFM	CFM	CFM
GCES80 0403A*	OFF OFF*	668	650	600	555	507	459	411	352	291	259
	ON OFF	785	754	736	690	650	604	565	527	482	438
	OFF ON	1104	1058	1020	1022	1013	981	952	918	887	855
	ON ON	1348	1294	1261	1250	1229	1233	1205	1182	1156	1129
GCES80 0603A*	OFF OFF*	716	647	592	541	478	420	368	296	245	198
	ON OFF	1054	1002	951	906	861	820	797	754	704	660
	OFF ON	1160	1102	1055	1017	970	930	891	847	800	780
	ON ON	1411	1356	1313	1272	1235	1198	1162	1127	1094	1063
GCES80 0804B*	OFF OFF*	784	716	645	583	516	405	334	282	229	197
	ON OFF	1295	1252	1203	1153	1114	1071	1022	981	931	883
	OFF ON	1596	1553	1512	1491	1450	1411	1388	1347	1312	1272
	ON ON	1757	1713	1691	1664	1625	1588	1552	1522	1488	1447
GCES80 0805C*	OFF OFF*	1171	884	667	576	495	399	338	302	260	206
	ON OFF	1175	1098	1024	947	883	823	764	703	640	567
	OFF ON	1782	1744	1715	1700	1660	1619	1579	1510	1455	1413
	ON ON	2145	2089	2058	2036	2020	2000	1971	1935	1890	1857
GCES80 1005C*	OFF OFF*	803	719	631	540	471	337	298	265	217	174
	ON OFF	1424	1385	1332	1284	1229	1176	1130	1078	1018	923
	OFF ON	1820	1769	1726	1685	1642	1603	1557	1521	1478	1434
	ON ON	2235	2185	2139	2108	2076	2032	2000	1964	1926	1896

[1] at 0.5” ESP

Notes:

- CFM in chart is without filter(s). Filters do not ship with this furnace, but must be provided by the installer. If the furnace requires two return filters, this chart assumes both filters are installed.
- All furnaces ship as high-speed cooling and medium-speed heating. Installer must adjust blower cooling and heating speed as needed.

CFM & Temperature Rise vs. External Static Pressure

Model	DIP Switches S1-1, S1-2, S1-3	External Static Pressure, (Inches Water Column)									
		0.1	0.2	0.3	0.4	0.5	0.6	0.7	0.8	0.9	1
		CFM	CFM	CFM	CFM	CFM	CFM	CFM	CFM	CFM	CFM
GCES80 0403A*	OFF OFF OFF	668	650	600	555	507	459	411	352	291	259
	OFF ON ON	668	650	600	555	507	459	411	352	291	259
	ON OFF ON	668	650	600	555	507	459	411	352	291	259
	ON ON ON	668	650	600	555	507	459	411	352	291	259
	ON OFF OFF	785	754	736	690	650	604	565	527	482	438
	ON ON OFF	862	827	823	787	770	733	692	655	614	582
	OFF ON OFF	1104	1058	1020	1022	1013	981	952	918	887	855
	OFF OFF ON*	1348	1294	1261	1250	1229	1233	1205	1182	1156	1129
GCES80 0603A*	OFF OFF OFF	716	647	592	541	478	420	368	296	245	198
	OFF ON ON	716	647	592	541	478	420	368	296	245	198
	ON OFF ON	716	647	592	541	478	420	368	296	245	198
	ON ON ON	716	647	592	541	478	420	368	296	245	198
	ON OFF OFF	1054	1002	951	906	861	820	797	754	704	660
	ON ON OFF	960	900	854	802	782	735	695	639	601	563
	OFF ON OFF	1160	1102	1055	1017	970	930	891	847	800	780
	OFF OFF ON*	1411	1356	1313	1272	1235	1198	1162	1127	1094	1063
GCES80 0804B*	OFF OFF OFF	784	716	645	583	516	405	334	282	229	197
	OFF ON ON	784	716	645	583	516	405	334	282	229	197
	ON OFF ON	784	716	645	583	516	405	334	282	229	197
	ON ON ON	784	716	645	583	516	405	334	282	229	197
	ON OFF OFF	1295	1252	1203	1153	1114	1071	1022	981	931	883
	ON ON OFF	1401	1366	1320	1278	1236	1194	1153	1112	1070	1025
	OFF ON OFF	1596	1553	1512	1491	1450	1411	1388	1347	1312	1272
	OFF OFF ON*	1757	1713	1691	1664	1625	1588	1552	1522	1488	1447
GCES80 0805C*	OFF OFF OFF	1171	884	667	576	495	399	338	302	260	206
	OFF ON ON	1171	884	667	576	495	399	338	302	260	206
	ON OFF ON	1171	884	667	576	495	399	338	302	260	206
	ON ON ON	1171	884	667	576	495	399	338	302	260	206
	ON OFF OFF	1175	1098	1024	947	883	823	764	703	640	567
	ON ON OFF	1436	1402	1362	1313	1244	1182	1132	1079	1025	965
	OFF ON OFF	1782	1744	1715	1700	1660	1619	1579	1510	1455	1413
	OFF OFF ON*	2145	2089	2058	2036	2020	2000	1971	1935	1890	1857
GCES80 1005C*	OFF OFF OFF	803	719	631	540	471	337	298	265	217	174
	OFF ON ON	803	719	631	540	471	337	298	265	217	174
	ON OFF ON	803	719	631	540	471	337	298	265	217	174
	ON ON ON	803	719	631	540	471	337	298	265	217	174
	ON OFF OFF	1424	1385	1332	1284	1229	1176	1130	1078	1018	923
	ON ON OFF	1626	1574	1524	1479	1433	1400	1358	1309	1266	1218
	OFF ON OFF	1820	1769	1726	1685	1642	1603	1557	1521	1478	1434
	OFF OFF ON*	2235	2185	2139	2108	2076	2032	2000	1964	1926	1896

[1] at 0.5” ESP

Notes:

- CFM in chart is without filter(s). Filters do not ship with this furnace, but must be provided by the installer. If the furnace requires two return filters, this chart assumes both filters are installed.
- All furnaces ship as high-speed cooling and medium-speed heating. Installer must adjust blower cooling and heating speed as needed.

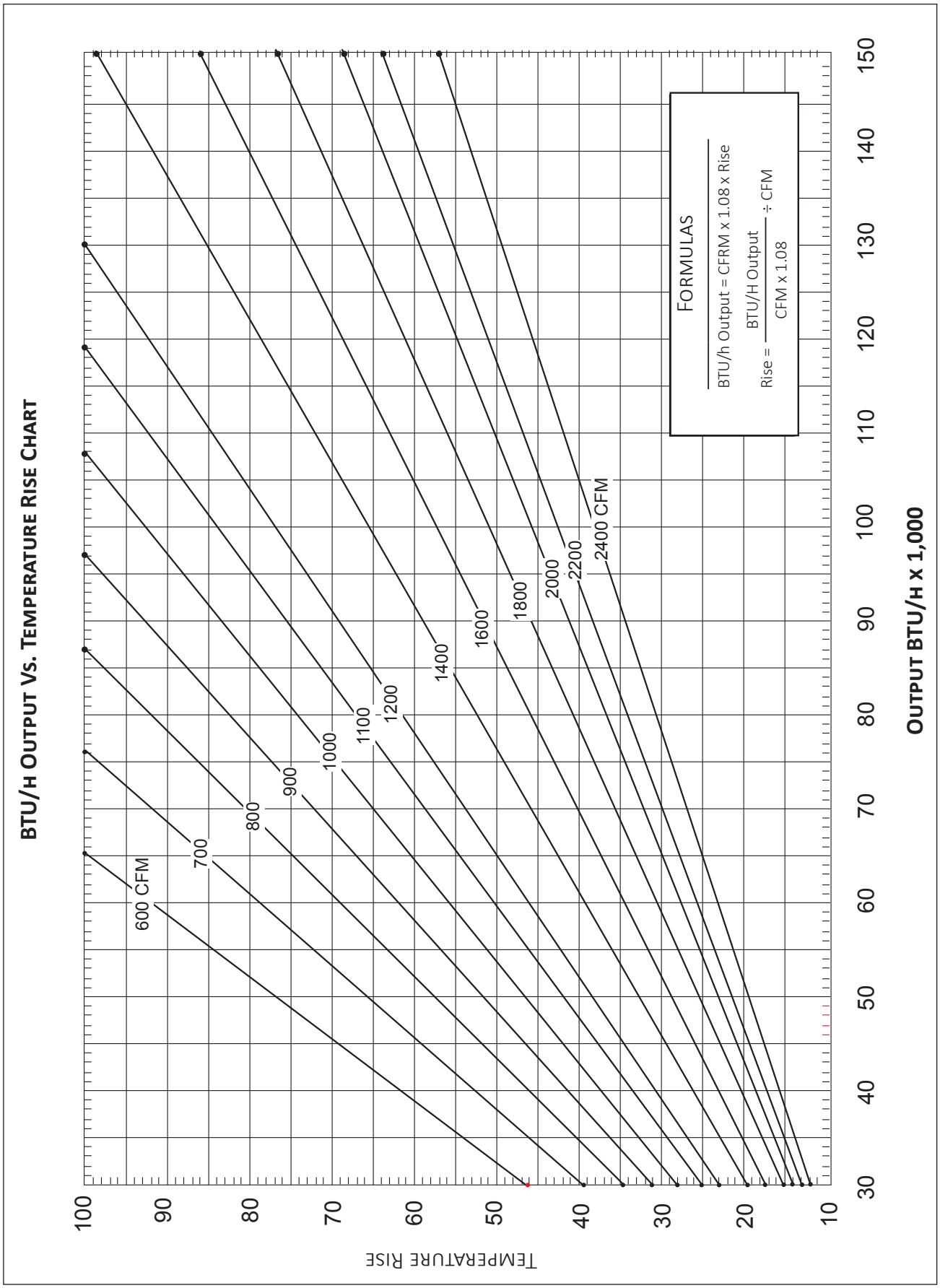
BTU/h Output Vs. Temperature Rise Chart
Temperature Rise
Output BTU/h x 1,000
600 CFM
700
800
900
1000
1100
1200
1400
1600
1800
2000
2200
2400 CFM
Formulas
BTU/h Output = CFRM x 1.08 x Rise
Rise = BTU/H Output / CFM x 1.08 ÷ CFM

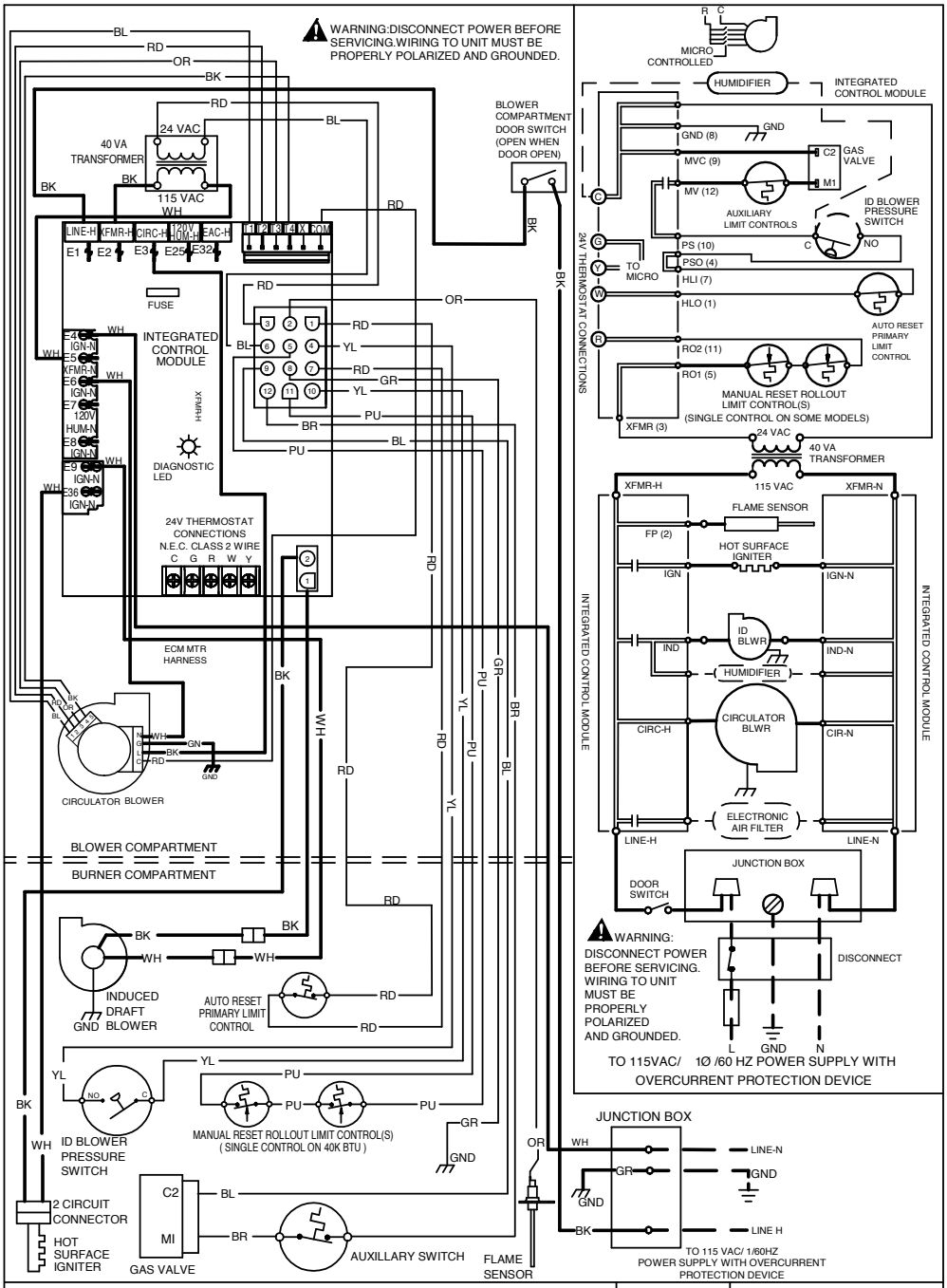

STEADY ON	= NORMAL OPERATION	
OFF	= CONTROL FAILURE	
1 FLASH	= SYSTEM LOCKOUT (RETRIES/RECYCLES EXCEEDED)	
2 FLASHES	= PRESSURE SWITCH STUCK CLOSED	
3 FLASHES	= PRESSURE SWITCH STUCK OPEN	
4 FLASHES	= OPEN HIGH LIMIT	
5 FLASHES	= FLAME SENSE WITHOUT GAS VALVE	
6 FLASHES	= OPEN ROLLOUT	
7 FLASHES	= LOW FLAME SIGNAL	
8 FLASHES	= IGNITER RELAY FAULT	
9 FLASHES	= TWINNING FAULT	
10 FLASHES	= OPEN FUSE	
11 FLASHES	= IGNITER OPEN	
12 FLASHES	= INDUCER RELAY ERROR	
RAPID FLASHES	= REVERSED 115 VAC POLARITY/VERIFY GND	

COLOR CODES:
YL YELLOW
OR ORANGE
PU PURPLE
GR GREEN
BK BLACK
PK PINK
BR BROWN
WH WHITE
BL BLUE
GY GRAY
RD RED

EQUIPMENT GND
FIELD GND
FIELD SPLICE
SWITCH (TEMP.)
IGNITER
SWITCH (PRESS.)
OVERCURRENT PROT. DEVICE
LOW VOLTAGE (24V)
LOW VOLTAGE FIELD
HI VOLTAGE (115V)
HI VOLTAGE FIELD
JUNCTION
TERMINAL
INTERNAL TO INTEGRATED CONTROL
PLUG CONNECTION

NOTES:
1. SET HEAT ANTICIPATOR ON ROOM THERMOSTAT AT 0.7 AMPS.
2. MANUFACTURER'S SPECIFIED REPLACEMENT PARTS MUST BE USED WHEN SERVICING.
3. IF ANY OF THE ORIGINAL WIRE AS SUPPLIED WITH THE FURNACE MUST BE REPLACED, IT MUST BE REPLACED WITH WIRING MATERIAL HAVING A TEMPERATURE RATING OF AT LEAST 105C. USE COPPER CONDUCTORS ONLY.
4. BLOWER SPEEDS MUST BE ADJUSTED BY INSTALLER TO MATCH THE INSTALLATION REQUIREMENTS SO AS TO PROVIDE THE CORRECT HEATING TEMPERATURE RISE AND THE CORRECT COOLING CFM. (SEE SPEC SHEET FOR AIR FLOW CHART)
5. UNIT MUST BE PERMANENTLY GROUNDED AND CONFORM TO N.E.C. AND LOCAL CODES.

0140F02483-A

High Voltage: Disconnect all power before servicing or installing this unit. Multiple power sources may be present. Failure to do so may cause property damage, personal injury, or death.

WARNING

Wiring is subject to change. Always refer to the wiring diagram on the unit for the most up-to-date wiring.

Model	Description
LPT-03 [1]	LP Conversion Kit
HANG20	High-Altitude Natural Gas Kit (4500+ ft)
AFE18-60A	Fossil Fuel Kit
MVK-01 [2]	Masonry Vent Kit
MVK-02 [2]	Masonry Vent Kit (for GMS81205D* & GMS81405D* only)
TK-400	Twinning Kit

[1] White-Rodgers and Honeywell valves
[2] Upflow applications only

Downflow Sub-base for:

Model	Description	GCES80 0403A*B	GCES80 0603A*B	GCES80 0804B*B	GCES80 1005C*B
SBT14	14” Furnace	√	√		
SBT17	17½” Furnace			√	
SBT21	21” Furnace				√

Minimum Filter Sizes

Model #	GMES80 0403A*	GMES80 0603A*	GMES80 0604B*	GMES80 0804B*	GMES80 0805C*	GMES80 81005C*	GMES80 1205D*	GMES80 1405D*
Filter Size (in²)	(1) 16 x 25 (Side) or (1) 14 x 24 (Bottom)		(1) 16 x 25 (Side or Bottom)		(1) 16 x 25 (Side or Bottom) [1]	(2) 16 x 25 (Side) or (1) 20 x 25 (Bottom)	(2) 16 x 25 (Side) or (1) 24 x 24 (Bottom)	

Model #	GCES80 0403A*	GCES80 0603A*	GCES80 0804B*	GCES80 1005C*
Filter Size (in²)	(2) 10 x 20 or (1) 14 x 25 (Top Return)		(2) 14xX 20 or (1) 16 x 25 (Top Return)	(2) 14 x 20 or (1) 20 x 25 (Top Return)

Model #	GCES80 0403A*	GCES80 0604B*	GCES80 0805C*
Filter Size (in²)	(1) 16 x 25 (Side) or (1) 14 x 24 (Bottom)	(1) 16 x 25 (Side or Bottom)	1- 16 X 25 (Side or Bottom) [1]

Note: Other size filters of equal or greater surface area may be used; filters may also be centrally located.

[1] Use 2- 16 x 25 filters on side returns or 20 x 25 filter on bottom return if furnace is connected to a cooling unit over 4 tons nominal capacity.

The manufacturing entity reserves the right to discontinue or change the specifications or design at any time without notice and without incurring any obligations.