Franklin™ Air Conditioning & Heating

MBVK

Multi-Position, Variable-Speed ECM-Based, Modular Blower Communicating

Contents

Air Handler Nomenclature 2
Heater Kit Nomenclature 2
Product Specifications 3
Airflow Data 4
Heat Kit Data 5
Dimensions 6
Wiring Diagram.....8
Accessories 11

R32 ComfortNet™

Product Features

- Variable-speed ECM blower motor
- Compatible with Daikin One+ smart thermostat and other Daikin communicating equipment
- Advanced configuration of the airflow and tonnage in communicating mode
- Provides constant CFM over a wide range of static pressure conditions independent of duct system
- CFM indicator
- Fault recall of six most recent faults
- Provides adjustable low CFM for efficient fan-only operation
- Improved humidity and comfort control
- Built-in compatibility with multi-stage heat pump and cooling applications
- UL 60335 2-40 Compliant
- AHRI certified; ETL listed

Cabinet Features

- Horizontal or vertical configuration capabilities
- 21” depth for easier attic access
- Foil-faced insulation covers the internal casing to reduce cabinet condensation
- Galvanized, leather grain-embossed finish
- Cabinet air leakage less than 2% at 1.0 inch H_20 when tested in accordance with ASHRE standard 193
- Cabinet air leakage less than 1.4% at 0.5 inch H_20 when tested in accordance with ASHRE standard 193
- Field Installed 3 kW – 20 kW electric heater kits available (for 230V models only)

10 YEAR PARTS LIMITED WARRANTY* | ALL ALUMINUM COIL | AHRI CERTIFIED www.ahridirectory.org | c ETL LISTED us Intertek | COMPANY WITH QUALITY SYSTEM CERTIFIED BY DNV GL = ISO 9001 = | COMPANY WITH ENVIRONMENTAL SYSTEM CERTIFIED BY DNV GL = ISO 14001 =

* Complete warranty details available from your local dealer or at www.franklinhvacsystems.com. To receive the 10-Year Parts Limited Warranty, online registration must be completed within 60 days of installation. Online registration and some of the additional requirements are not required in Florida, California, or Québec. The duration of warranty coverage in Texas and Florida differs in some cases. Other limitations and exclusions apply; refer to complete warranty details for a full list of limitations and exclusions.

M	B	V	K	16	C	H	1	X	0 0	A	A
1	2	3	4	5,6	7	8	9	10	11 12	13	14

Brand
MB - Modular Blower

Motor Speed
V - Variable

Communicating Controls Protocol
B - ComfortBridge
K - ClimateTalk

Airflow Delivered
12 - 1200 cfm
16 - 1600 cfm
20 - 2000 cfm

Cabinet Width
B - 17.5"
C - 21.0"
D - 24.5"

Cabinet
P - Standard
H - High Efficiency Cold Climate

Electrical
1 208/230 V, 1 Phase, 60 Hz
0 115V, 1 Phase, 60 Hz

Circuit Breaker
X - No Circuit Breaker

Factory Installed Electric Heat KW
00 -No Electric Heat

Major Revision
A

Minor Revision
A

H	K	T	A	D	2	5	D	1
1	2	3	4	5	6	7	8	9

Unit Type
HKTA - Electric heater
Kit for 2-piece air handlers

Service Disconnect
D - Service disconnect
N - No service disconnect

Heating Capacity @ 240 V

3 3.00 kW	6 6.00 kW	10 10.00 kW
5 5.00 kW	8 7.00 kW	15 15.00 kW
		20 20.00 KW

Cabinet Size
X - All Cabinets
C - C Cabinet
D - D Cabinet

Electrical
A - Single phase 208 V
B - Single phase 240 V
1 - Single phase 208/240 V
3 - Three phase 208/240 V

Model	MBVK 12BP1X00	MBVK 16CP1X00	MBVK 20DP1X00	MBVK 16CH1X00	MBVK 12BP0X00	MBVK 16CP0X00	MBVK 20DP0X00	MBVK 16CH0X00
Blower								
Diameter	10"	10"	11"	11.9"	10"	10"	11"	11.9"
Width	8"	8"	10"	10.7"	8"	8"	10"	10.7"
Electrical Data								
Voltage (V)	208/230	208/230	208/230	208/230	115	115	115	115
MCA (A)	4.9	6.5	6.5	6.5	7.1	10.4	10.4	10.4
MOP (A)	15			15	15	15	15	15
Blower Motor Power (HP)	½	¾	¾	¾	½	¾	¾	¾
Dimensions								
Width	17½"	21"	24½"	21"	17½"	21"	24½"	21"
Depth	21"	21"	21"	21"	21"	21"	21"	21"
Height	26"	30"	30"	30"	26"	30"	30"	30"
Ship Weight (Lbs.)	67	80	86	72	67	80	86	72

- Minimum Circuit Ampacity and Maximum Overcurrent Protection Device (MOD) for blower without supplemental heat installed. Refer to unit nameplate for these specifications with approved accessory heaters installed.
- Condensate management kits are available for units installed in high temperature and high humidity areas. Kit number MBK0002 has been developed to resolve condensate issues in the field and is available from the Service Parts Department. Refer to IO-849 for installation instructions.

Model	Speed Tap	Speed	0.1	0.2	0.3	0.4	0.5	0.6	0.7	0.8	0.9
MBVK12BP1X00 MBVK12BP0X00	A	Low	420	415	400	400	395	390	390	390	380
	B	Low	550	545	540	540	535	530	530	525	520
	C	Low	680	675	670	665	660	655	655	650	640
	D	Low	810	805	800	800	800	795	790	785	785
	A	High	615	605	600	600	595	590	590	585	580
	B	High	805	805	800	800	800	795	790	785	780
	C	High	1010	1005	1000	1000	995	995	990	985	975
	D	High	1210	1205	1200	1200	1200	1195	1195	1190	1180
MBVK16CP1X00 MBVK16CP0X00	A	Low	690	680	670	665	660	655	625	595	575
	B	Low	850	830	800	795	790	785	775	750	725
	C	Low	980	970	940	935	930	910	890	865	860
	D	Low	1110	1085	1070	1055	1045	1025	1000	990	975
	A	High	1045	1015	1000	990	975	950	935	920	900
	B	High	1245	1215	1200	1180	1175	1165	1150	1130	1115
	C	High	1415	1410	1400	1365	1360	1350	1340	1330	1320
	D	High	1605	1600	1600	1540	1530	1520	1510	1500	1490
MBVK20DP1X00 MBVK20DP0X00	A	Low	835	815	800	800	795	795	790	775	750
	B	Low	1075	1070	1070	1065	1050	1045	1045	1040	1035
	C	Low	1210	1205	1200	1200	1195	1190	1190	1185	1175
	D	Low	1345	1340	1340	1320	1320	1315	1315	1305	1305
	A	High	1210	1205	1200	1195	1150	1150	1145	1135	1115
	B	High	1610	1605	1600	1540	1535	1535	1530	1520	1510
	C	High	1830	1805	1800	1785	1760	1760	1755	1750	1715
	D	High	2020	2010	2000	1995	1995	1970	1970	1965	1955

Model	OD Unit	0.1	0.2	0.3	0.4	0.5	0.6	0.7	0.8	0.9
MBVK16CH1X00 MBVK16CH0X00	2T	900	900	900	900	900	900	900	900	900
	3T	1450	1450	1450	1450	1450	1450	1450	1450	1450
	5T	1640	1640	1640	1640	1640	1640	1640	1640	1640

*The chart is for information only. For satisfactory operation, external static pressure must not exceed 0.9 wc.
*Unit may provide different SCFM during electrical heater operation. See IO manual for the airflow rate.
*CFM values are based on 0% trim. Refer to outdoor spec sheet for higher/lower trim values

Cooling and Heating Airflow (MBVK12BP1X00, MBVK16CP1X00, MBVK20DP1X00, MBVK12BP0X00, MBVK16CP0X00 and MBVK20DP0X00)

S1	S2	Speed Tap	MBVK12BP1X00 Airflow (SCFM)	MBVK16CP1X00 Airflow (SCFM)	MBVK20DP1X00 Airflow (SCFM)
off	off	A	600	1000	1200
on	off	B	800	1200	1600
off	on	C	1000	1400	1800
on	on	D	1200	1600	2000

Cooling / HP / Aux Trim			Cooling Profile		
S3	S4	Trim Value	S5	S6	Speed Tap
off	off	0	off	off	A
on	off	10%	on	off	B
off	on	-10%	off	on	C
on	on	0	on	on	D

Heater Kit Airflow (MBVK12BP1X00, MBVK16CP1X00, MBVK20DP1X00, MBVK12BP0X00, MBVK16CP0X00 and MBVK20DP0X00)

S9	S10	S11	Heater KW	MBVK12BP1X00 Airflow (SCFM)	MBVK16CP1X00 Airflow (SCFM)	MBVK20DP1X00 Airflow (SCFM)	MBVK12BP0X00 Airflow (SCFM)	MBVK16CP0X00 Airflow (SCFM)	MBVK20DP0X00 Airflow (SCFM)
off	off	on	20	NA	NA	2000	NA	NA	NA
off	on	off	15	1400	1500	1500	NA	NA	NA
off	on	on	10	1000	1000	1200	NA	NA	NA
on	off	off	8	740	1000	1000	NA	NA	NA
on	off	on	6	635	800	800	NA	NA	NA
on	on	off	5	600	800	800	NA	NA	NA
on	on	on	3	600	800	800	NA	NA	NA

Models	Circuit 1 (208V/240V)			Circuit 2 (208V/240V)			Single-Point Kit (208V/240V)	
	Heater Amps	MCA[1]	MOP[2]	Heater Amps	MCA[1]	MOP[2]	MCA[1]	MOP[2]
MBVK12BP1X00AB	0/0	4.9/4.9	15/15	---	---	---	---	---
HKTAN031	10.8/12.5	18.4/20.5	20/25	---	---	---	---	---
HKTA*051	18.1/20.8	27.4/30.9	30/35	---	---	---	---	---
HKTAN061	21.7/25.0	32.0/36.1	35/40	---	---	---	---	---
HKTA*081	25.3/29.2	36.5/41.3	40/45	---	---	---	---	---
HKTA*101	36.1/41.7	50.0/57.0	50/60	---	---	---	---	---
HKTAD151	36.1/41.7	50.0/57.0	50/60	18/20.8	22.5/26.0	25/30	72.6/83.0	80/90
MBVK16CP1X00AB	0/0	6.5/6.5	15/15	---	---	---	---	---
HKTAN031	10.8/12.5	20.0/22.1	20/25	---	---	---	---	---
HKTA*051	18.1/20.8	29.1/32.5	30/35	---	---	---	---	---
HKTAN061	21.7/25.0	33.6/37.8	35/40	---	---	---	---	---
HKTA*081	25.3/29.2	38.1/43.0	40/45	---	---	---	---	---
HKTA*101	36.1/41.7	51.6/58.6	60/60	---	---	---	---	---
HKTAD151	36.1/41.7	51.6/58.6	60/60	18/20.8	22.5/26.0	25/30	74.2/84.6	80/90
MBVK20DP1X00AB	0/0	6.5/6.5	15/15	---	---	---	---	---
HKTAN031	10.8/12.5	20.0/22.1	20/25	---	---	---	---	---
HKTA*051	18.1/20.8	29.1/32.5	30/35	---	---	---	---	---
HKTAN061	21.7/25.0	33.6/37.8	35/40	---	---	---	---	---
HKTA*081	25.3/29.2	38.1/43.0	40/45	---	---	---	---	---
HKTA*101	36.1/41.7	51.6/58.6	60/60	---	---	---	---	---
HKTAD151	36.1/41.7	51.6/58.6	60/60	18/20.8	22.5/26.0	25/30	74.2/84.6	80/90
HKTAD201	36.1/41.7	51.6/58.6	60/60	36.1/41.7	45.2/52.1	50/60	96.8/111	100/125
MBVK16CH1X00	0/0	6.5/6.5	15/15	---	---	---	---	---
HKTSN03X1	10.8/12.5	20.0/22.1	20/20	---	---	---	---	---
HKTSN05X1	17.3/20.0	28.2/31.5	30/35	---	---	---	---	---
HKTZD15X1	17.3/20.0	28.2/31.5	30/35	34.7/40.0	43.3/50.0	45/50	71.5/81.5	80/90
MBVK12BP0X00	0/0	7.1	15	---	---	---	---	---
MBVK16CP0X00	0/0	10.4	15	---	---	---	---	---
MBVK20DP0X00	0/0	10.4	15	---	---	---	---	---
MBVK16CH0X00	0/0	10.4	15	---	---	---	---	---

All ampacities noted above include air handler motor amps

Circuit 1: Single-phase for Air Handlers / Circuit 2: Three-phase for HKR3 Heater Kits

[1] Minimum Circuit Ampacity (Heater Amps + Motor Amps) X 1.25

[2] Maximum Overcurrent Protection = 2.25 X Motor Amps + Heater Amps

* D - Service disconnect, N - No service disconnect

--- indicates Not Required

Heating kW Correction Factor
(MBVK12BP1X00, MBVK16CP1X00, MBVK20DP1X00)

Supply Voltage	240	230	220	210	208
Correction Factor	1.00	0.92	0.84	0.77	0.75

Multiply the 240-volt heating capacity by correction factors.

Model	Dimensions		
	Width	Depth	Height
MBVK12BP1X00 MBVK12BP0X00	17½"	21"	26"
MBVK16CP1X00 MBVK16CP0X00	21"	21"	30"
MBVK20DP1X00 MBVK20DP0X00	24½"	21"	30"
MBVK16CH1X00 MBVK16CH0X00	21"	21"	30"

Top Views: MBVK12BP1X00, MBVK16CP1X00, MBVK20DP1X00, MBVK12BP0X00, MBVK16CP0X00 and MBVK20DP0X00

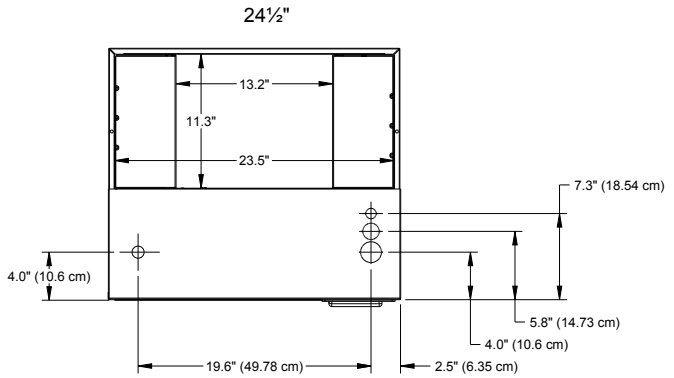

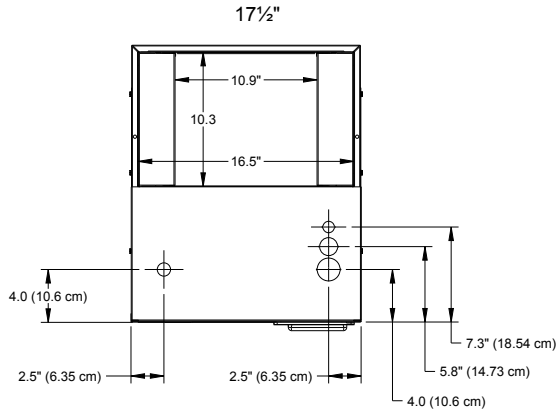

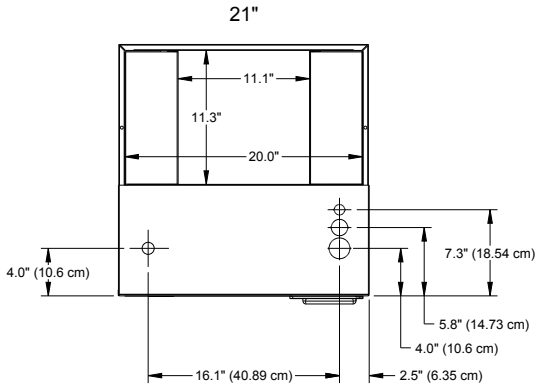

Front and Side Views: MBVK12BP1X00, MBVK16CP1X00, MBVK20DP1X00, MBVK12BP0X00, MBVK16CP0X00 and MBVK20DP0X00

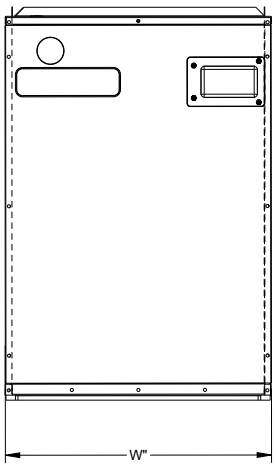

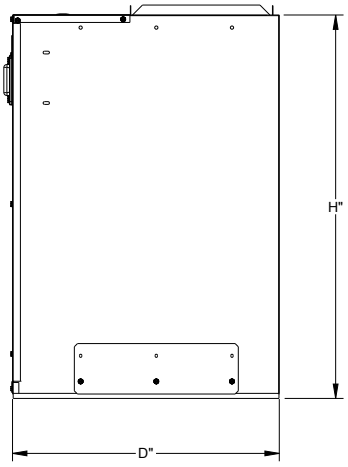

TOP VIEWS

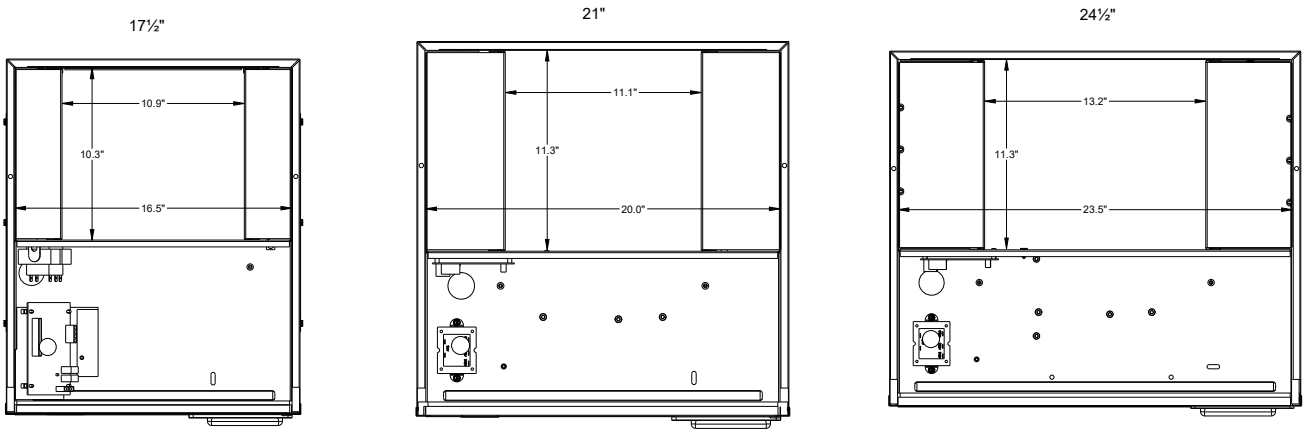

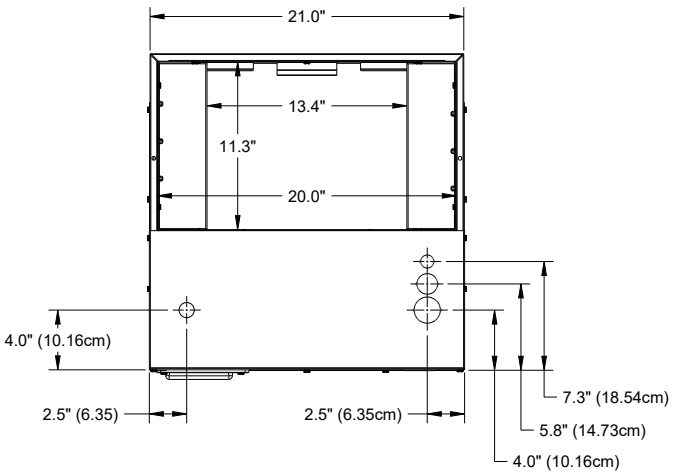

MBVK16CH0X00

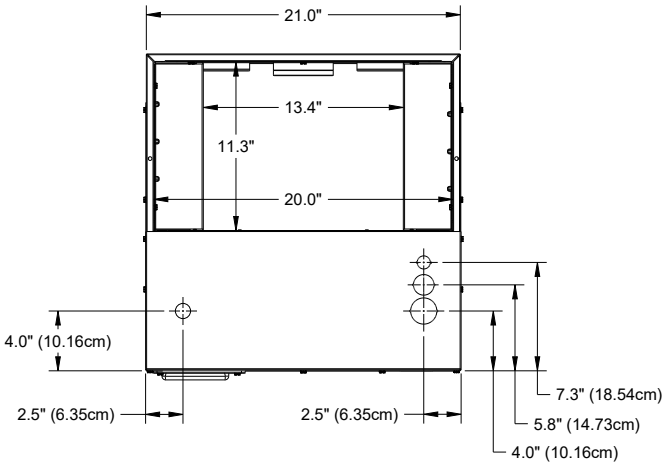

MBVK16CH1X00

FRONT AND SIDE VIEWS

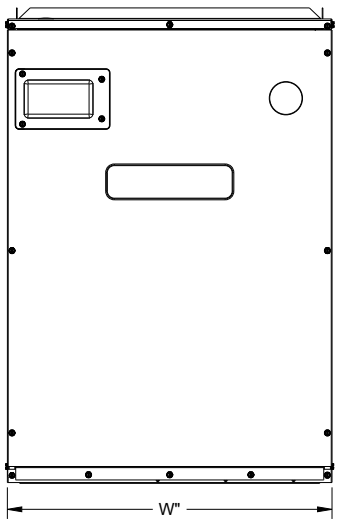

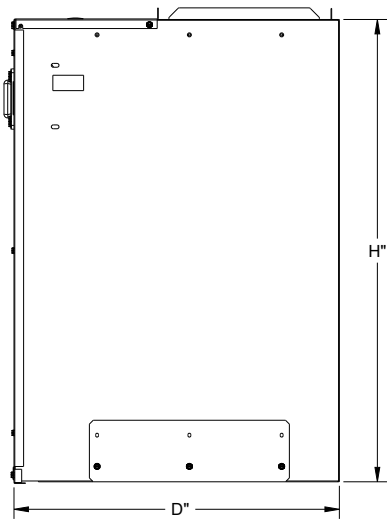

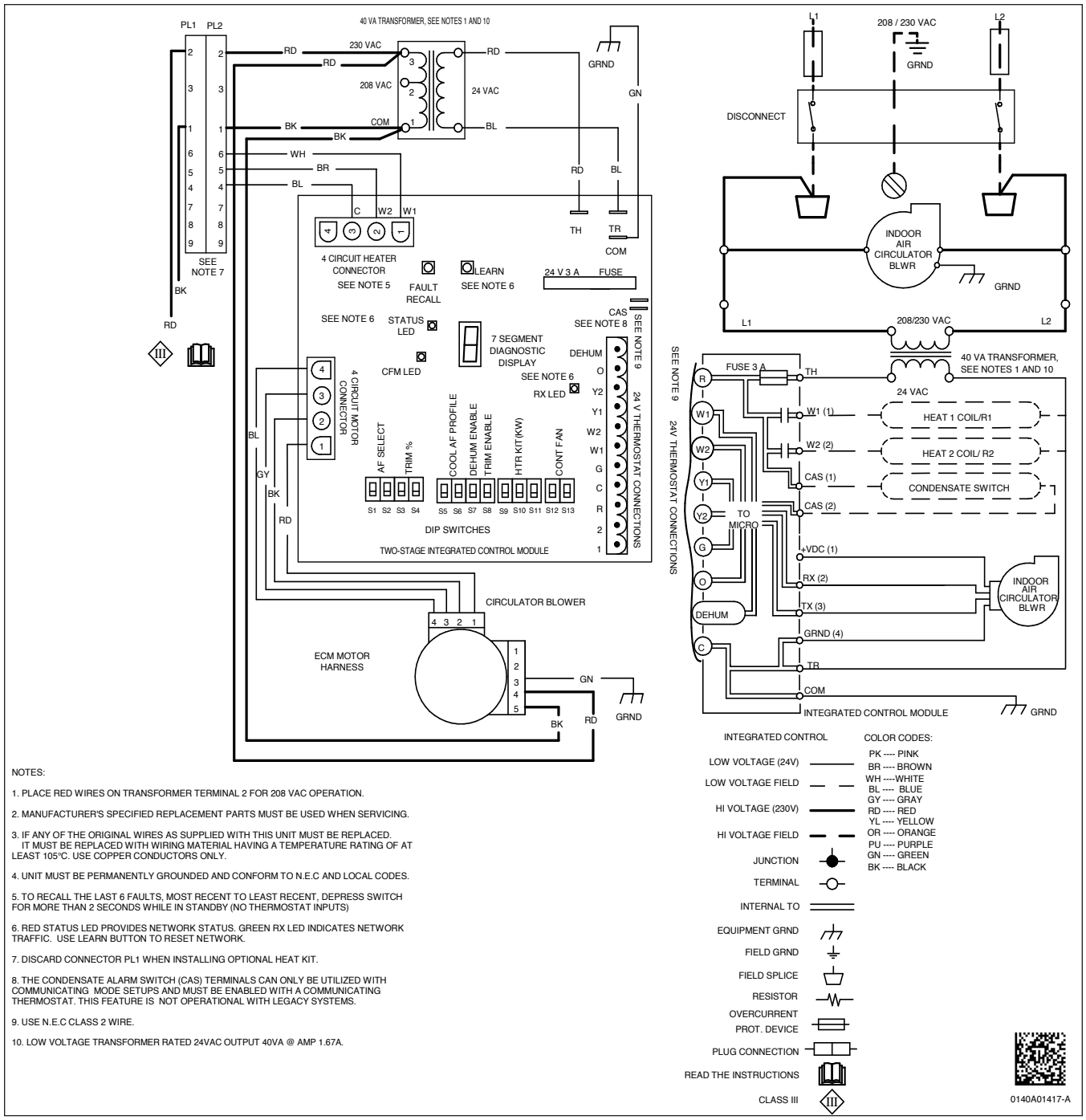

NOTES:

1. PLACE RED WIRES ON TRANSFORMER TERMINAL 2 FOR 208 VAC OPERATION.

2. MANUFACTURER'S SPECIFIED REPLACEMENT PARTS MUST BE USED WHEN SERVICING.

3. IF ANY OF THE ORIGINAL WIRES AS SUPPLIED WITH THIS UNIT MUST BE REPLACED. IT MUST BE REPLACED WITH WIRING MATERIAL HAVING A TEMPERATURE RATING OF AT LEAST 105°C. USE COPPER CONDUCTORS ONLY.

4. UNIT MUST BE PERMANENTLY GROUNDED AND CONFORM TO N.E.C AND LOCAL CODES.

5. TO RECALL THE LAST 6 FAULTS, MOST RECENT TO LEAST RECENT, DEPRESS SWITCH FOR MORE THAN 2 SECONDS WHILE IN STANDBY (NO THERMOSTAT INPUTS)

6. RED STATUS LED PROVIDES NETWORK STATUS. GREEN RX LED INDICATES NETWORK TRAFFIC. USE LEARN BUTTON TO RESET NETWORK.

7. DISCARD CONNECTOR PL1 WHEN INSTALLING OPTIONAL HEAT KIT.

8. THE CONDENSATE ALARM SWITCH (CAS) TERMINALS CAN ONLY BE UTILIZED WITH COMMUNICATING MODE SETUPS AND MUST BE ENABLED WITH A COMMUNICATING THERMOSTAT. THIS FEATURE IS NOT OPERATIONAL WITH LEGACY SYSTEMS.

9. USE N.E.C CLASS 2 WIRE.

10. LOW VOLTAGE TRANSFORMER RATED 24VAC OUTPUT 40VA @ AMP 1.67A.

⚠ **WARNING**	***High Voltage:*** Disconnect all power before servicing or installing this unit. Multiple power sources may be present. Failure to do so may cause property damage, personal injury, or death. ⚡

Wiring is subject to change. Always refer to the wiring diagram on the unit for the most up-to-date wiring.

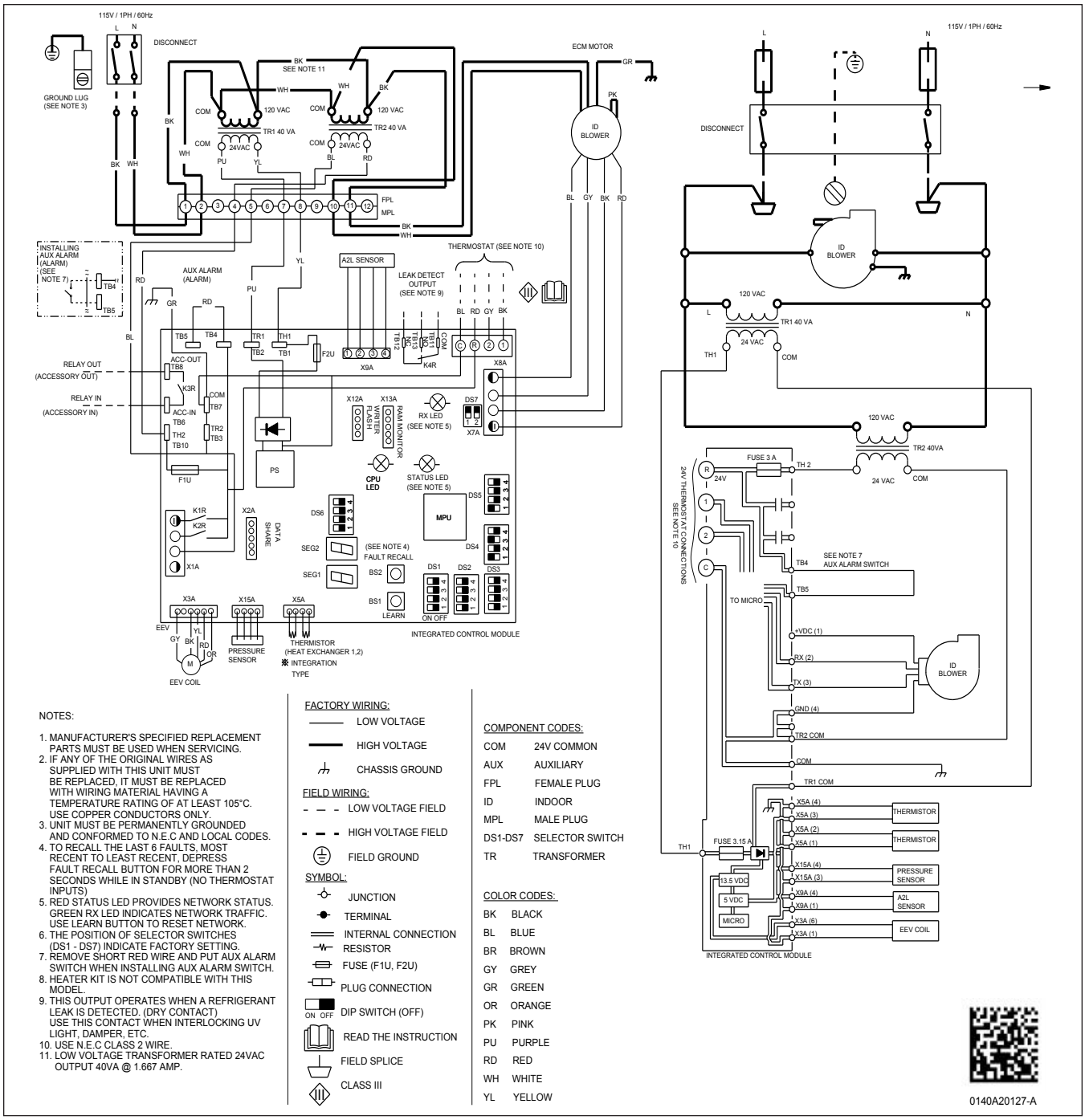

NOTES:

1. MANUFACTURER'S SPECIFIED REPLACEMENT PARTS MUST BE USED WHEN SERVICING.
2. IF ANY OF THE ORIGINAL WIRES AS SUPPLIED WITH THIS UNIT MUST BE REPLACED, IT MUST BE REPLACED WITH WIRING MATERIAL HAVING A TEMPERATURE RATING OF AT LEAST 105°C. USE COPPER CONDUCTORS ONLY.
3. UNIT MUST BE PERMANENTLY GROUNDED AND CONFORMED TO N.E.C AND LOCAL CODES.
4. TO RECALL THE LAST 6 FAULTS, MOST RECENT TO LEAST RECENT, DEPRESS FAULT RECALL BUTTON FOR MORE THAN 2 SECONDS WHILE IN STANDBY (NO THERMOSTAT INPUTS)
5. RED STATUS LED PROVIDES NETWORK STATUS. GREEN RX LED INDICATES NETWORK TRAFFIC. USE LEARN BUTTON TO RESET NETWORK.
6. THE POSITION OF SELECTOR SWITCHES (DS1 - DS7) INDICATE FACTORY SETTING.
7. REMOVE SHORT RED WIRE AND PUT AUX ALARM SWITCH WHEN INSTALLING AUX ALARM SWITCH.
8. HEATER KIT IS NOT COMPATIBLE WITH THIS MODEL.
9. THIS OUTPUT OPERATES WHEN A REFRIGERANT LEAK IS DETECTED. (DRY CONTACT) USE THIS CONTACT WHEN INTERLOCKING UV LIGHT, DAMPER, ETC.
10. USE N.E.C CLASS 2 WIRE.
11. LOW VOLTAGE TRANSFORMER RATED 24VAC OUTPUT 40VA @ 1.667 AMP.

FACTORY WIRING:

- LOW VOLTAGE
- HIGH VOLTAGE
- CHASSIS GROUND

FIELD WIRING:

- LOW VOLTAGE FIELD
- HIGH VOLTAGE FIELD
- FIELD GROUND

SYMBOL:

- JUNCTION
- TERMINAL
- INTERNAL CONNECTION
- RESISTOR
- FUSE (F1U, F2U)
- PLUG CONNECTION
- ON OFF DIP SWITCH (OFF)
- READ THE INSTRUCTION
- FIELD SPLICE
- CLASS III

COMPONENT CODES:

COM	24V COMMON
AUX	AUXILIARY
FPL	FEMALE PLUG
ID	INDOOR
MPL	MALE PLUG
DS1-DS7	SELECTOR SWITCH
TR	TRANSFORMER

COLOR CODES:

BK	BLACK
BL	BLUE
BR	BROWN
GY	GREY
GR	GREEN
OR	ORANGE
PK	PINK
PU	PURPLE
RD	RED
WH	WHITE
YL	YELLOW

WARNING ***High Voltage:*** Disconnect all power before servicing or installing this unit. Multiple power sources may be present. Failure to do so may cause property damage, personal injury, or death.

Wiring is subject to change. Always refer to the wiring diagram on the unit for the most up-to-date wiring.

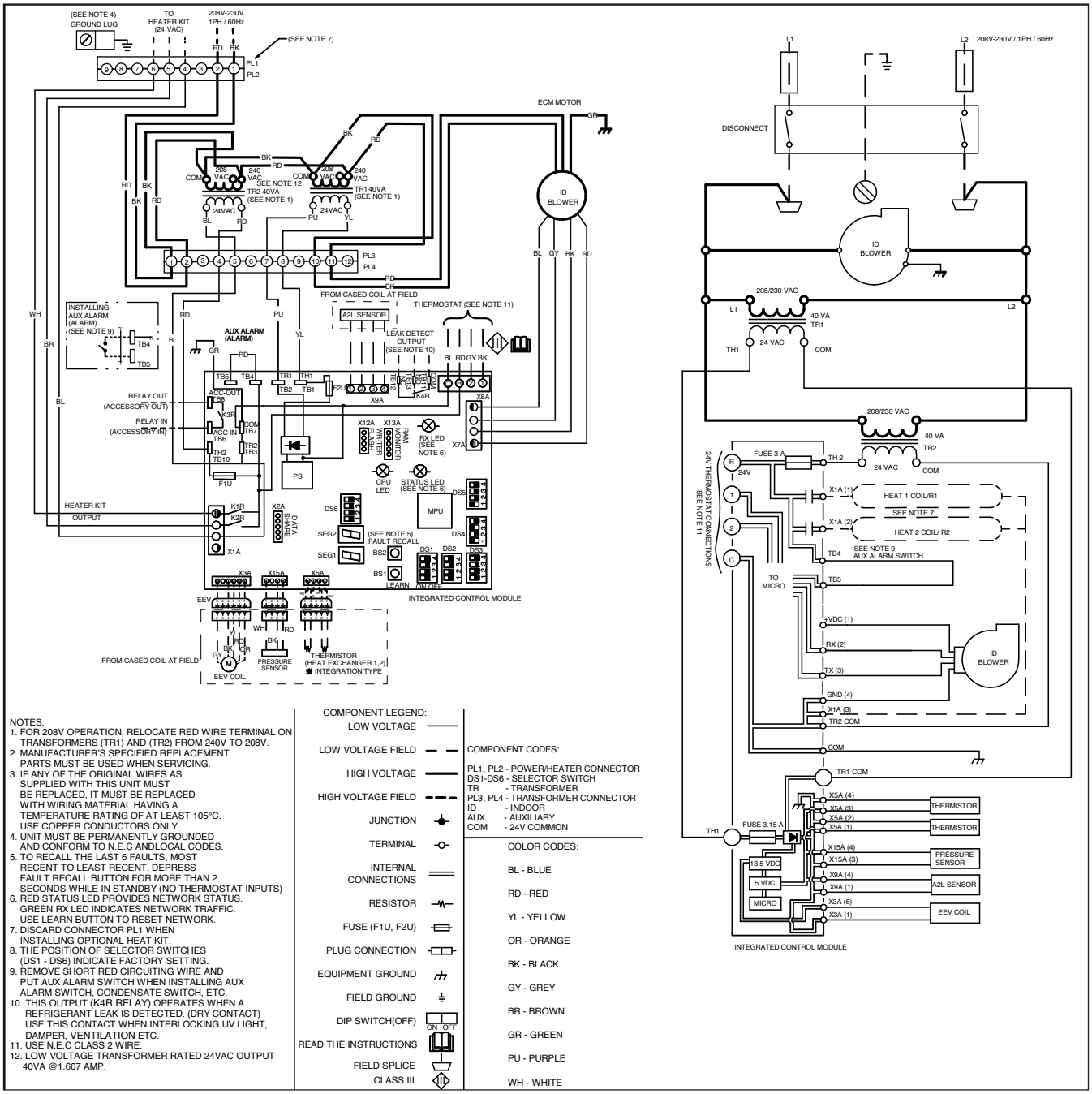

NOTES:
1. FOR 208V OPERATION, RELOCATE RED WIRE TERMINAL ON TRANSFORMERS (TR1) AND (TR2) FROM 240V TO 208V.
2. MANUFACTURER'S SPECIFIED REPLACEMENT PARTS MUST BE USED WHEN SERVICING.
3. IF ANY OF THE ORIGINAL WIRES AS SUPPLIED WITH THIS UNIT MUST BE REPLACED, IT MUST BE REPLACED WITH WIRING MATERIAL HAVING A TEMPERATURE RATING OF AT LEAST 105°C. USE COPPER CONDUCTORS ONLY.
4. UNIT MUST BE PERMANENTLY GROUNDED AND CONFORM TO N.E.C ANDLOCAL CODES.
5. TO RECALL THE LAST 6 FAULTS, MOST RECENT TO LEAST RECENT, DEPRESS FAULT RECALL BUTTON FOR MORE THAN 2 SECONDS WHILE IN STANDBY (NO THERMOSTAT INPUTS)
6. RED STATUS LED PROVIDES NETWORK STATUS. GREEN RX LED INDICATES NETWORK TRAFFIC. USE LEARN BUTTON TO RESET NETWORK.
7. DISCARD CONNECTOR PL1 WHEN INSTALLING OPTIONAL HEAT KIT.
8. THE POSITION OF SELECTOR SWITCHES (DS1 - DS6) INDICATE FACTORY SETTING.
9. REMOVE SHORT RED CIRCUITING WIRE AND PUT AUX ALARM SWITCH WHEN INSTALLING AUX ALARM SWITCH, CONDENSATE SWITCH, ETC.
10. THIS OUTPUT (K4R RELAY) OPERATES WHEN A REFRIGERANT LEAK IS DETECTED. (DRY CONTACT) USE THIS CONTACT WHEN INTERLOCKING UV LIGHT, DAMPER, VENTILATION ETC.
11. USE N.E.C CLASS 2 WIRE.
12. LOW VOLTAGE TRANSFORMER RATED 24VAC OUTPUT 40VA @1.667 AMP.

COMPONENT LEGEND:
- LOW VOLTAGE
- LOW VOLTAGE FIELD
- HIGH VOLTAGE
- HIGH VOLTAGE FIELD
- JUNCTION
- TERMINAL
- INTERNAL CONNECTIONS
- RESISTOR
- FUSE (F1U, F2U)
- PLUG CONNECTION
- EQUIPMENT GROUND
- FIELD GROUND
- DIP SWITCH(OFF) (ON OFF)
- READ THE INSTRUCTIONS
- FIELD SPLICE
- CLASS III

COMPONENT CODES:
PL1, PL2 - POWER/HEATER CONNECTOR
DS1-DS6 - SELECTOR SWITCH
TR - TRANSFORMER
PL3, PL4 - TRANSFORMER CONNECTOR
ID - INDOOR
AUX - AUXILIARY
COM - 24V COMMON

COLOR CODES:
BL - BLUE
RD - RED
YL - YELLOW
OR - ORANGE
BK - BLACK
GY - GREY
BR - BROWN
GR - GREEN
PU - PURPLE
WH - WHITE

WARNING ***High Voltage:*** Disconnect all power before servicing or installing this unit. Multiple power sources may be present. Failure to do so may cause property damage, personal injury, or death.

Wiring is subject to change. Always refer to the wiring diagram on the unit for the most up-to-date wiring.

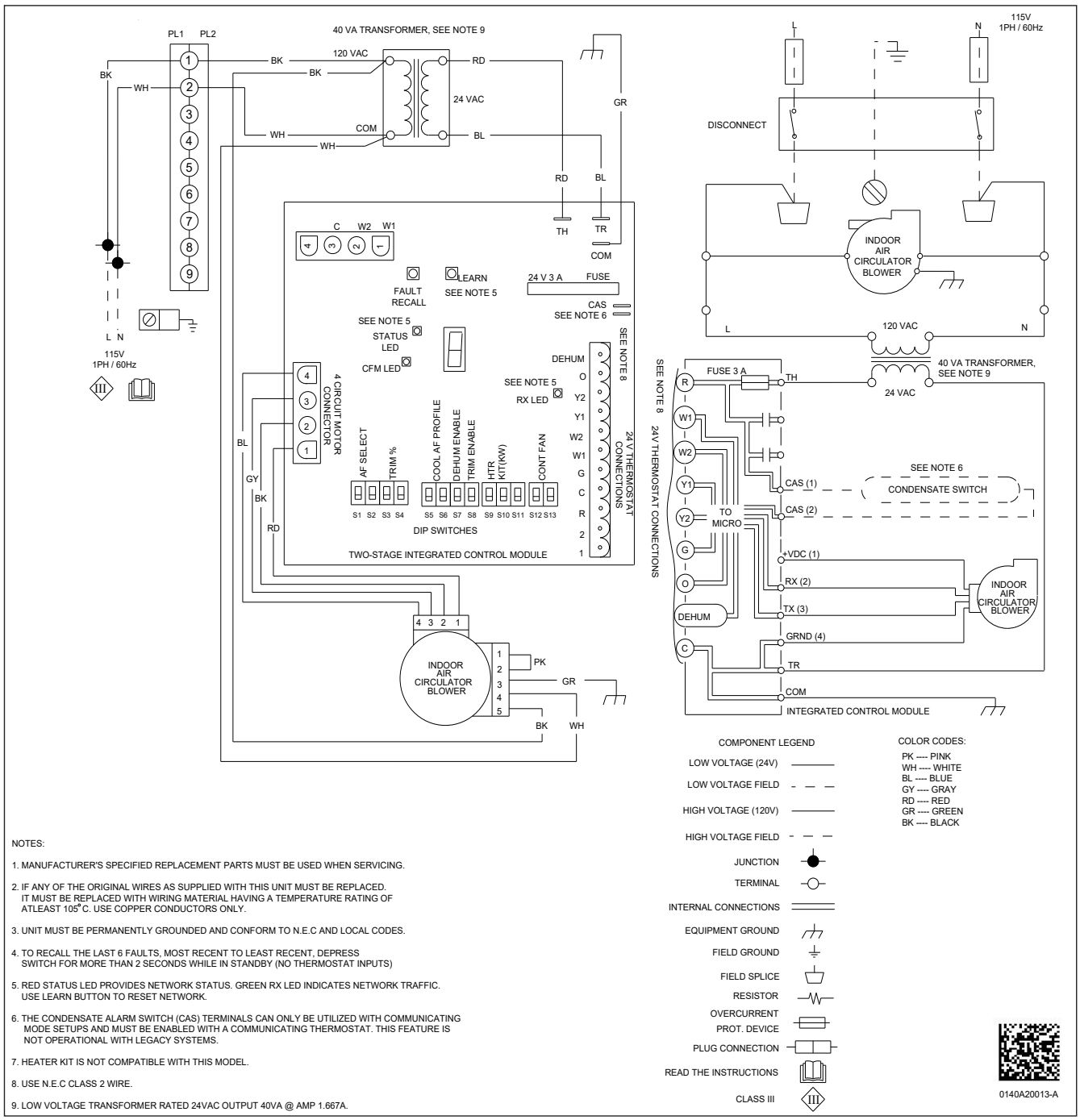

NOTES:

1. MANUFACTURER'S SPECIFIED REPLACEMENT PARTS MUST BE USED WHEN SERVICING.
2. IF ANY OF THE ORIGINAL WIRES AS SUPPLIED WITH THIS UNIT MUST BE REPLACED. IT MUST BE REPLACED WITH WIRING MATERIAL HAVING A TEMPERATURE RATING OF ATLEAST 105°C. USE COPPER CONDUCTORS ONLY.
3. UNIT MUST BE PERMANENTLY GROUNDED AND CONFORM TO N.E.C AND LOCAL CODES.
4. TO RECALL THE LAST 6 FAULTS, MOST RECENT TO LEAST RECENT, DEPRESS SWITCH FOR MORE THAN 2 SECONDS WHILE IN STANDBY (NO THERMOSTAT INPUTS)
5. RED STATUS LED PROVIDES NETWORK STATUS. GREEN RX LED INDICATES NETWORK TRAFFIC. USE LEARN BUTTON TO RESET NETWORK.
6. THE CONDENSATE ALARM SWITCH (CAS) TERMINALS CAN ONLY BE UTILIZED WITH COMMUNICATING MODE SETUPS AND MUST BE ENABLED WITH A COMMUNICATING THERMOSTAT. THIS FEATURE IS NOT OPERATIONAL WITH LEGACY SYSTEMS.
7. HEATER KIT IS NOT COMPATIBLE WITH THIS MODEL.
8. USE N.E.C CLASS 2 WIRE.
9. LOW VOLTAGE TRANSFORMER RATED 24VAC OUTPUT 40VA @ AMP 1.667A.

⚠ **WARNING**	***High Voltage:*** Disconnect all power before servicing or installing this unit. Multiple power sources may be present. Failure to do so may cause property damage, personal injury, or death. ⚡

Wiring is subject to change. Always refer to the wiring diagram on the unit for the most up-to-date wiring.

Single Point Kit

	HKTAD151	HKTAD201	MBVK16CH1X00
SPW-01	X	X	X

Can only be installed along with the above heat kits. This kit will fit any MBVK blower as long as a compatible heat kit is installed in the unit.

MBVK Blower Performance Data (MBVK12BP1X00, MBVK16CP1X00, MBVK20DP1X00, MBVK12BP0X00, MBVK16CP0X00 and MBVK20DP0X00)

Dipswitch Number	Function	Default Setting
S1 - S2*	Cooling / HP Airflow A/B/C/D	Airflow D
S3 - S4*	Cooling / HP / Aux Trim (-10%, 0, +10%)	No Trim
S5 - S6*	Cooling Profile A,B,C,D	Profile 1
S7*	Dehum (on/off)	Off
S8	Unused	On
S9 - S11	Heater Kit Kw	Off/Off/Off

* Valid only if the system is wired in legacy mode. If system is wired in the 4-wire communicating mode, these functions are selected via the user menu in the CTK01AA T-STAT.

Heat Kit Selection

Model	MBVK12BP1X00	MBVK16CP1X00	MBVK20DP1X00	MBVK16CH1X00	MBVK12BP0X00	MBVK16CP0X00	MBVK20DP0X00	MBVK16CH0X00
HKTAN031	X	X	X	---	---	---	---	---
HKTAN051	X	X	X	---	---	---	---	---
HKTAD051	X	X	X	---	---	---	---	---
HKTAN061	X	X	X	---	---	---	---	---
HKTAN081	X	X	X	---	---	---	---	---
HKTAD081	X	X	X	---	---	---	---	---
HKTAN101	X	X	X	---	---	---	---	---
HKTAD101	X	X	X	---	---	---	---	---
HKTAD151	X	X	X	---	---	---	---	---
HKTAD201	---	---	X	---	---	---	---	---
HKTSN03X1	---	---	---	X	---	---	---	---
HKTSN05X1	---	---	---	X	---	---	---	---
HKTZD15X1	---	---	---	X	---	---	---	---

Refer to the minimum airflow requirements for each of the heat kits.
--- Indicates Not Permitted

MINIMUM CFM REQUIRED FOR HEATER KITS

	Heater (kW)		
	3	5	15
MBVK16CH1X00	851	851	1219
MBVK16CH0X00	-	-	-

+ Limitations with Outdoor unit match-ups:

Switch Bank DS3						Model
Function	Dip switch Setting	Switch 9	Switch 10	Switch 11	Switch 12	MBVK16CH1X00
Heater Kit Selection	**NO Heater Kit**	**OFF***	**OFF***	**OFF***	**OFF***	**-**
	First Valid Heater Kit	ON	ON	ON	ON	3
	Second Valid Heater kit	ON	ON	ON	OFF	5
	Third Valid Heater Kit	ON	ON	OFF	ON	15
	Fourth Valid Heater kit	ON	ON	OFF	OFF	NR
	Fifth Valid Heater Kit	ON	OFF	ON	ON	NR
	Sixth Valid Heater kit	ON	OFF	ON	OFF	NR
	Seventh Valid Heater Kit	ON	OFF	OFF	ON	NR

The manufacturing entity reserves the right to discontinue or change the specifications or design at any time without notice and without incurring any obligations.