Franklin Air Conditioning & Heating

GLXT7C

High-Efficiency
R-32 Split System Air Conditioner
Up to 17.2 SEER2
2 To 5 Tons

Contents

Nomenclature 2
Product Specifications.....3
Expanded Cooling Data.....4
Performance Data 20
Wiring Diagram 22
Dimensions 23
Accessories.....23

ComfortBridge™ technology · CoolCloud™ · SMART SPEED™ · R32

Standard Features

- Two-Stage Copeland Ultra-Tech scroll compressor
- Quiet two-speed ECM outdoor fan motor
- Integrated communicating ComfortBridge™ Technology
- Commissioning and diagnostics via Bluetooth indoor board via CoolCloud™ App
- Copeland® ComfortAlert™ built in diagnostics
- Copper tube/enhanced aluminum fin coil - 5mm on 2.0-3.0T
- Color-coded terminal strip for non-communicating set-up
- Only two low-voltage wires required in communication mode
- Factory-installed filter drier
- Factory-installed transformer
- Factory-installed high and low-pressure switches
- High-density foam compressor sound blanket
- Fully charged for 15’ of tubing length
- Ambient temperature sensors
- Ground lug connection
- AHRI Certified - ETL Listed

Cabinet Features

- Removable grille-style top design compliant with UL 60335-2-40
- Venturi for increased velocity of airflow
- Heavy-gauge galvanized steel cabinet
- Baked-on powder-paint finish with 500-hour salt-spray approval
- Steel louver coil guard with rust-resistant screws.
- Top and side maintenance access
- Single-panel access to controls with space for field-installed accessories
- Service valves with sweat connections and easy-access gauge ports
- When properly anchored, meets the 2023 Florida Building Code unit integrity requirements for hurricane-type winds (Anchor bracket kits available.)

LIFETIME COMPRESSOR LIMITED WARRANTY* · 10 YEAR UNIT REPLACEMENT LIMITED WARRANTY* · 10 YEAR PARTS LIMITED WARRANTY* · Intertek · AHRI CERTIFIED · QUALITY SYSTEM CERTIFIED BY DNV GL = ISO 9001 = · ENVIRONMENTAL SYSTEM CERTIFIED BY DNV GL = ISO 14001 =

* Complete warranty details available from your local dealer or at www.goodmanmfg.com. To receive the Lifetime Compressor Limited Warranty (good for as long as you own your home), 10-Year Unit Replacement Limited Warranty and 10-Year Parts Limited Warranty, online registration must be completed within 60 days of installation. Online registration and some of the additional requirements are not required in Florida, California, or Québec. The duration of warranty coverage in Texas and Florida differs in some cases. Other limitations and exclusions apply; refer to complete warranty details for a full list of limitations and exclusions.

G	L	X	T	7	C	A	36	1	0 *	A	A *
1	2	3	4	5	6	7	8,9	10	11	12	

Brand

G Goodman Brand

Type

L R-32 Split System

Outdoor Type

X Condenser

Z Heat Pump

Compressor Type

S Single Stage

T Two Stage

V Variable Speed

Efficiency (SEER2) Nominal

13.4 - 13.7 = 3	16.0 - 16.9 = 6
13.8 - 14.5 = 4	17.0 - 17.9 = 7
14.6 - 15.5 = 5	18.0 - 18.9 = 8
	19.0+ = 9

Minor Rev

A

Major Revisions

A

Variation

Electrical

208/230 V, 1 Phase, 60 Hz

Nominal Capacity

24 - 2 tons	48 - 4 tons
36 - 3 tons	60 - 5 Tons

Sales Region

N - North

S - Southeast & North

A - All Region

Feature/Application

B - Standard

M - Multi-Family

C - Communicating (Top Flow)

S - Side Discharge Communicating

	GLXT7CA 2410A*	GLXT7CA 3610A*	GLXT7CA 4810A*	GLXT7CA 6010A*
Cooling Capacity				
Nominal Cooling (BTU/h)	24,000	36,000	48,000	60,000
Decibels (High/Low)	69.0	70.0	73.0	75.0
Compressor				
RLA	9.9	14.5	23.2	27.1
LRA	68	91	128	178
Stage	Two	Two	Two	Two
Type	Scroll	Scroll	Scroll	Scroll
Condenser Fan Motor				
Motor Type	ECM	ECM	ECM	ECM
Horsepower (RPM)	⅓	⅓	⅓	⅓
FLA	2.60	2.60	2.60	2.60
Refrigeration System				
Refrigerant Line Size[1]				
Liquid Line Size (“O.D.)	⅜"	⅜"	⅜"	⅜"
Suction Line Size (“O.D.)	¾"	⅞"	1⅛"	1⅛"
Refrigerant Connection Size				
Liquid Valve Size (“O.D.)	⅜"	⅜"	⅜"	⅜"
Suction Valve Size (“O.D.")[2, 3]	¾"	¾"	⅞"	⅞"
Valve Connection Type	Sweat	Sweat	Sweat	Sweat
Refrigerant Charge[4]	104	92	180	167
Electrical Data				
Voltage-Phase-Hz	208/230-1	208/230-1	208/230-1	208/230-1
Minimum Circuit Ampacity [5]	15.0	20.8	31.6	36.4
Max. Overcurrent Protection [6]	20	35	50	60
Min / Max Volts	197/253	197/253	197/253	197/253
Electrical Conduit Size	½" or ¾"	½" or ¾"	½" or ¾"	½" or ¾"
Equipment Weight (lbs)	214	216	276	283
Ship Weight (lbs)	219	221	281	288

[1] Line sizes denoted for 25’ line sets, tested and rated in accordance with ARI Standard 210/240. For other line set lengths or sizes, refer to the Installation Instructions and/or the Long Line Set Applications guide.

[2] Any suction line adapter will need to be supplied by the field.

[3] Unit is factory charged with refrigerant for 15’ of ⅜” liquid line. System charge must be adjusted per the Final Charge Adjustment procedure found in the Installation Instructions.

[4] Wire size should be determined in accordance with National Electrical Codes; extensive wire runs will require larger wire sizes

[5] Must use time-delay fuses or HACR-type circuit breakers of the same size as noted.

Notes

- Always check the S&R plate for electrical data on the unit being installed.

			Outdoor Ambient Temperature																							
			65ºF				75ºF				85ºF				95ºF				105ºF				115ºF			
			Entering Indoor Wet Bulb Temperature																							
IDB	Airflow		59	63	67	71	59	63	67	71	59	63	67	71	59	63	67	71	59	63	67	71	59	63	67	71
70	700	MBh	24.3	24.7	25.4	-	24.1	24.4	25.2	-	23.5	23.8	24.5	-	22.4	22.7	23.4	-	21.0	21.4	22.1	-	19.8	20.1	20.9	-
		S/T	0.56	0.49	0.36	-	0.57	0.50	0.36	-	0.59	0.52	0.39	-	1.00	0.54	0.41	-	1.00	0.56	0.43	-	1.00	0.61	0.48	-
		ΔT	20	19	15	-	20	19	15	-	21	19	15	-	20	19	15	-	20	18	15	-	21	19	16	-
		kW	1.44	1.44	1.44	-	1.60	1.60	1.60	-	1.78	1.78	1.78	-	1.97	1.97	1.97	-	2.19	2.19	2.19	-	2.44	2.44	2.44	-
		Amps	4.7	4.7	4.6	-	5.4	5.4	5.3	-	6.1	6.1	6.1	-	7.0	7.0	7.0	-	7.9	7.9	7.9	-	9.0	9.0	9.0	-
	840	MBh	24.7	25.1	25.8	-	24.5	24.9	25.6	-	23.9	24.2	25.0	-	22.8	23.1	23.9	-	21.4	21.8	22.5	-	20.2	20.6	21.3	-
		S/T	0.65	0.57	0.44	-	0.66	0.58	0.45	-	0.68	0.61	0.47	-	1.00	0.62	0.49	-	1.00	0.65	0.51	-	1.00	0.70	0.56	-
		ΔT	19	17	14	-	19	17	14	-	19	17	14	-	19	17	14	-	19	17	13	-	20	18	14	-
		kW	1.45	1.45	1.45	-	1.61	1.61	1.61	-	1.79	1.79	1.79	-	1.99	1.98	1.98	-	2.20	2.20	2.20	-	2.45	2.45	2.45	-
		Amps	4.7	4.7	4.7	-	5.4	5.4	5.4	-	6.2	6.2	6.2	-	7.0	7.0	7.0	-	8.0	8.0	7.9	-	9.1	9.1	9.0	-
	900	MBh	24.9	25.3	26.0	-	24.7	25.1	25.8	-	24.1	24.4	25.2	-	23.0	23.3	24.1	-	21.7	22.0	22.7	-	20.4	20.8	21.5	-
		S/T	0.67	0.60	0.46	-	0.68	0.60	0.47	-	0.70	0.63	0.49	-	1.00	0.65	0.51	-	1.00	0.67	0.54	-	1.00	0.72	0.59	-
		ΔT	18	16	13	-	18	16	13	-	19	17	13	-	18	16	13	-	18	16	13	-	19	17	14	-
		kW	1.46	1.46	1.46	-	1.62	1.62	1.61	-	1.80	1.80	1.79	-	1.99	1.99	1.99	-	2.21	2.20	2.20	-	2.46	2.46	2.45	-
		Amps	4.7	4.7	4.7	-	5.4	5.4	5.4	-	6.2	6.2	6.2	-	7.0	7.0	7.0	-	8.0	8.0	8.0	-	9.1	9.1	9.1	-
75	700	MBh	24.3	24.7	25.4	26.5	24.1	24.5	25.2	26.3	23.5	23.8	24.6	25.7	22.4	22.7	23.5	24.6	21.0	21.4	22.1	23.2	19.8	20.2	20.9	22.0
		S/T	0.69	0.62	0.48	0.3	0.70	0.62	0.49	0.4	1.00	0.65	0.51	0.4	1.00	0.67	0.53	0.4	1.00	0.69	0.55	0.4	1.00	1.00	0.61	0.5
		ΔT	25	23	19	16	24	23	19	16	25	23	19	16	24	23	19	16	24	22	19	15	25	24	20	16
		kW	1.44	1.44	1.44	1.5	1.60	1.60	1.60	1.6	1.78	1.78	1.78	1.8	1.97	1.97	1.97	2.0	2.19	2.19	2.18	2.2	2.44	2.44	2.44	2.4
		Amps	4.7	4.7	4.6	4.7	5.4	5.4	5.3	5.4	6.1	6.1	6.1	6.2	7.0	7.0	7.0	7.0	7.9	7.9	7.9	7.9	9.0	9.0	9.0	9.0
	840	MBh	24.8	25.1	25.8	26.9	24.5	24.9	25.6	26.7	23.9	24.2	25.0	26.1	22.8	23.1	23.9	25.0	21.5	21.8	22.5	23.6	20.2	20.6	21.3	22.4
		S/T	0.77	0.70	0.57	0.4	1.00	0.71	0.57	0.4	1.00	0.73	0.60	0.5	1.00	0.75	0.62	0.5	1.00	0.77	0.64	0.5	1.00	1.00	0.69	0.6
		ΔT	23	21	18	14	23	21	18	14	23	21	18	14	23	21	18	14	23	21	17	14	24	22	19	15
		kW	1.45	1.45	1.45	1.46	1.61	1.61	1.61	1.62	1.79	1.79	1.79	1.80	1.98	1.98	1.98	1.99	2.20	2.20	2.20	2.21	2.45	2.45	2.45	2.46
		Amps	4.7	4.7	4.7	4.7	5.4	5.4	5.4	5.4	6.2	6.2	6.2	6.2	7.0	7.0	7.0	7.1	8.0	8.0	7.9	8.0	9.1	9.1	9.0	9.1
	900	MBh	25.0	25.3	26.0	27.2	24.7	25.1	25.8	26.9	24.1	24.5	25.2	26.3	23.0	23.4	24.1	25.2	21.7	22.0	22.7	23.9	20.4	20.8	21.5	22.6
		S/T	0.80	0.72	0.59	0.5	1.00	0.73	0.60	0.5	1.00	0.75	0.62	0.5	1.00	0.77	0.64	0.5	1.00	1.00	0.66	0.5	1.00	1.00	0.71	0.6
		ΔT	22	21	17	14	22	21	17	13	23	21	17	14	22	21	17	13	22	20	17	13	23	21	18	14
		kW	1.46	1.46	1.45	1.5	1.62	1.62	1.61	1.6	1.80	1.79	1.79	1.8	1.99	1.99	1.98	2.0	2.20	2.20	2.20	2.2	2.46	2.46	2.45	2.5
		Amps	4.7	4.7	4.7	4.8	5.4	5.4	5.4	5.5	6.2	6.2	6.2	6.2	7.0	7.0	7.0	7.1	8.0	8.0	8.0	8.0	9.1	9.1	9.1	9.1

IDB = Entering Indoor Dry Bulb Temperature
High and low pressures are measured at the liquid and suction service valves.

Shaded area is ACCA (TVA) conditions

kW = Total system power
Amps = outdoor unit amps (comp.+fan)

Expanded Cooling Data — GLXT7CA2410**/CA*TA2422*3A*+EEP - HIGH STAGE (cont.)

			Outdoor Ambient Temperature																							
			65ºF				75ºF				85ºF				95ºF				105ºF				115ºF			
			Entering Indoor Wet Bulb Temperature																							
IDB	Airflow		59	63	67	71	59	63	67	71	59	63	67	71	59	63	67	71	59	63	67	71	59	63	67	71
80	700	MBh	24.5	24.8	25.5	26.7	24.2	24.6	25.3	26.4	23.6	24.0	24.7	25.8	22.5	22.9	23.6	24.7	21.2	21.5	22.2	23.4	19.9	20.3	21.0	22.1
		S/T	1.00	0.74	0.61	0.5	1.00	0.74	0.61	0.5	1.00	0.77	0.64	0.5	1.00	1.00	0.66	0.5	1.00	1.00	0.68	0.5	1.00	1.00	0.73	0.6
		ΔT	29	27	23	20	29	27	23	20	29	27	24	20	29	27	23	20	28	26	23	19	29	28	24	21
		kW	1.44	1.44	1.44	1.5	1.60	1.60	1.60	1.6	1.78	1.78	1.78	1.8	1.97	1.97	1.97	2.0	2.19	2.19	2.19	2.2	2.44	2.44	2.44	2.5
		Amps	4.7	4.7	4.6	4.7	5.4	5.4	5.3	5.4	6.1	6.1	6.1	6.2	7.0	7.0	7.0	7.0	7.9	7.9	7.9	7.9	9.0	9.0	9.0	9.0
	840	MBh	24.9	25.2	26.0	27.1	24.7	25.0	25.7	26.8	24.0	24.4	25.1	26.2	22.9	23.3	**24.0**	25.1	21.6	21.9	22.7	23.8	20.4	20.7	21.4	22.5
		S/T	1.00	0.82	0.69	0.6	1.00	0.83	0.70	0.6	1.00	0.85	0.72	0.6	1.00	1.00	**0.74**	0.6	1.00	1.00	0.76	0.6	1.00	1.00	0.81	0.7
		ΔT	27	25	22	18	27	25	22	18	27	25	22	18	27	25	**22**	18	27	25	21	18	28	26	23	19
		kW	1.45	1.45	1.45	1.46	1.61	1.61	1.61	1.62	1.79	1.79	1.79	1.80	1.99	1.98	**1.98**	1.99	2.20	2.20	2.20	2.21	2.45	2.45	2.45	2.46
		Amps	4.7	4.7	4.7	4.8	5.4	5.4	5.4	5.4	6.2	6.2	6.2	6.2	7.0	7.0	**7.0**	7.1	8.0	8.0	7.9	8.0	9.1	9.1	9.0	9.1
	900	MBh	25.1	25.4	26.2	27.3	24.9	25.2	25.9	27.1	24.2	24.6	25.3	26.4	23.1	23.5	24.2	25.3	21.8	22.1	22.9	24.0	20.6	20.9	21.6	22.8
		S/T	1.00	0.84	0.71	0.6	1.00	0.85	0.72	0.6	1.00	0.88	0.74	0.6	1.00	1.00	0.76	0.6	1.00	1.00	0.78	0.6	1.00	1.00	0.83	0.7
		ΔT	27	25	21	18	26	25	21	18	27	25	21	18	26	25	21	18	26	24	21	17	27	26	22	18
		kW	1.46	1.46	1.45	1.5	1.62	1.62	1.61	1.6	1.80	1.80	1.79	1.8	1.99	1.99	1.99	2.0	2.21	2.20	2.20	2.2	2.46	2.46	2.45	2.5
		Amps	4.7	4.7	4.7	4.8	5.4	5.4	5.4	5.5	6.2	6.2	6.2	6.2	7.0	7.0	7.0	7.1	8.0	8.0	8.0	8.0	9.1	9.1	9.1	9.1
85	700	MBh	24.9	25.2	25.9	27.1	24.7	25.0	25.7	26.8	24.0	24.4	25.1	26.2	22.9	23.3	24.0	25.1	21.6	21.9	22.7	23.8	20.4	20.7	21.4	22.5
		S/T	1.00	0.84	0.70	0.6	1.00	1.00	0.71	0.6	1.00	1.00	0.74	0.6	1.00	1.00	0.75	0.6	1.00	1.00	0.78	0.6	1.00	1.00	1.00	0.7
		ΔT	32	30	27	23	32	30	27	23	32	31	27	24	32	30	27	23	32	30	27	23	33	31	28	24
		kW	1.45	1.45	1.44	1.5	1.61	1.60	1.60	1.6	1.78	1.78	1.78	1.8	1.98	1.98	1.97	2.0	2.19	2.19	2.19	2.2	2.45	2.44	2.44	2.5
		Amps	4.7	4.7	4.7	4.7	5.4	5.4	5.4	5.4	6.1	6.1	6.1	6.2	7.0	7.0	7.0	7.0	7.9	7.9	7.9	8.0	9.0	9.0	9.0	9.1
	840	MBh	25.3	25.6	26.4	27.5	25.1	25.4	26.1	27.3	24.4	24.8	25.5	26.6	23.3	23.7	24.4	25.5	22.0	22.3	23.1	24.2	20.8	21.1	21.8	23.0
		S/T	1.00	0.92	0.79	0.7	1.00	1.00	0.80	0.7	1.00	1.00	0.82	0.7	1.00	1.00	0.84	0.7	1.00	1.00	1.00	0.7	1.00	1.00	1.00	0.8
		ΔT	31	29	25	22	31	29	25	22	31	29	26	22	31	29	25	22	30	29	25	22	32	30	26	23
		kW	1.46	1.46	1.45	1.47	1.62	1.62	1.61	1.63	1.80	1.79	1.79	1.80	1.99	1.99	1.98	2.00	2.20	2.20	2.20	2.21	2.46	2.46	2.45	2.47
		Amps	4.7	4.7	4.7	4.8	5.4	5.4	5.4	5.5	6.2	6.2	6.2	6.2	7.0	7.0	7.0	7.1	8.0	8.0	8.0	8.0	9.1	9.1	9.1	9.1
	900	MBh	25.5	25.8	26.6	27.7	25.3	25.6	26.4	27.5	24.6	25.0	25.7	26.8	23.5	23.9	24.6	25.7	22.2	22.6	23.3	24.4	21.0	21.3	22.1	23.2
		S/T	1.00	0.94	0.81	0.7	1.00	1.00	0.82	0.7	1.00	1.00	0.84	0.7	1.00	1.00	0.86	0.7	1.00	1.00	1.00	0.7	1.00	1.00	1.00	0.8
		ΔT	30	28	25	21	30	28	25	21	30	29	25	21	30	28	25	21	30	28	25	21	31	29	26	22
		kW	1.46	1.46	1.46	1.5	1.62	1.62	1.62	1.6	1.80	1.80	1.80	1.8	1.99	1.99	1.99	2.0	2.21	2.21	2.20	2.2	2.46	2.46	2.46	2.5
		Amps	4.7	4.7	4.7	4.8	5.4	5.4	5.4	5.5	6.2	6.2	6.2	6.3	7.1	7.1	7.0	7.1	8.0	8.0	8.0	8.0	9.1	9.1	9.1	9.1

IDB = Entering Indoor Dry Bulb Temperature

High and low pressures are measured at the liquid and suction service valves.

Shaded area is ACCA (TVA) conditions

kW = Total system power

Amps = outdoor unit amps (comp.+fan)

Expanded Cooling Data — GLXT7CA2410**/CA*TA2422*3A*+EEP - LOW STAGE

			Outdoor Ambient Temperature																							
			65ºF				75ºF				85ºF				95ºF				105ºF				115ºF			
			Entering Indoor Wet Bulb Temperature																							
IDB	Airflow		59	63	67	71	59	63	67	71	59	63	67	71	59	63	67	71	59	63	67	71	59	63	67	71
70	490	MBh	17.5	17.7	18.3	-	17.3	17.6	18.1	-	16.9	17.1	17.6	-	16.1	16.3	16.9	-	15.1	15.4	15.9	-	14.2	14.5	15.0	-
		S/T	0.58	0.50	0.37	-	0.59	0.51	0.37	-	0.61	0.53	0.40	-	1.00	0.55	0.42	-	1.00	0.58	0.44	-	1.00	0.63	0.49	-
		ΔT	20	18	15	-	20	18	15	-	20	18	15	-	20	18	15	-	19	18	14	-	21	19	15	-
		kW	0.91	0.91	0.91	-	1.01	1.01	1.01	-	1.12	1.12	1.12	-	1.24	1.24	1.24	-	1.38	1.38	1.37	-	1.54	1.54	1.53	-
		Amps	2.9	2.9	2.9	-	3.4	3.4	3.4	-	3.9	3.9	3.8	-	4.4	4.4	4.4	-	5.0	5.0	5.0	-	5.7	5.7	5.7	-
	588	MBh	17.8	18.0	18.6	-	17.6	17.9	18.4	-	17.2	17.4	17.9	-	16.4	16.6	17.2	-	15.4	15.7	16.2	-	14.5	14.8	15.3	-
		S/T	0.67	0.59	0.45	-	0.67	0.60	0.46	-	1.00	0.62	0.49	-	1.00	0.64	0.51	-	1.00	0.66	0.53	-	1.00	1.00	0.58	-
		ΔT	18	16	13	-	18	16	13	-	18	17	13	-	18	16	13	-	18	16	13	-	19	17	14	-
		kW	0.92	0.91	0.91	-	1.02	1.01	1.01	-	1.13	1.13	1.13	-	1.25	1.25	1.25	-	1.38	1.38	1.38	-	1.54	1.54	1.54	-
		Amps	3.0	3.0	3.0	-	3.4	3.4	3.4	-	3.9	3.9	3.9	-	4.4	4.4	4.4	-	5.0	5.0	5.0	-	5.7	5.7	5.7	-
	630	MBh	17.9	18.2	18.7	-	17.8	18.0	18.6	-	17.3	17.6	18.1	-	16.5	16.8	17.3	-	15.6	15.8	16.3	-	14.7	14.9	15.5	-
		S/T	0.69	0.61	0.48	-	0.70	0.62	0.48	-	1.00	0.64	0.51	-	1.00	0.66	0.53	-	1.00	0.69	0.55	-	1.00	1.00	0.60	-
		ΔT	18	16	13	-	18	16	13	-	18	16	13	-	18	16	13	-	17	16	12	-	19	17	13	-
		kW	0.92	0.92	0.92	-	1.02	1.02	1.02	-	1.13	1.13	1.13	-	1.25	1.25	1.25	-	1.39	1.39	1.38	-	1.55	1.55	1.54	-
		Amps	3.0	3.0	3.0	-	3.4	3.4	3.4	-	3.9	3.9	3.9	-	4.4	4.4	4.4	-	5.0	5.0	5.0	-	5.7	5.7	5.7	-
75	490	MBh	17.5	17.7	18.3	19.1	17.3	17.6	18.1	18.9	16.9	17.1	17.7	18.5	16.1	16.3	16.9	17.7	15.1	15.4	15.9	16.7	14.2	14.5	15.0	15.8
		S/T	0.71	0.63	0.50	0.4	1.00	0.64	0.50	0.4	1.00	0.66	0.53	0.4	1.00	0.68	0.55	0.4	1.00	1.00	0.57	0.4	1.00	1.00	0.62	0.5
		ΔT	24	22	19	15	24	22	18	15	24	22	19	15	24	22	18	15	23	22	18	15	24	23	19	16
		kW	0.91	0.91	0.90	0.9	1.01	1.01	1.01	1.0	1.12	1.12	1.12	1.1	1.24	1.24	1.24	1.2	1.38	1.38	1.37	1.4	1.54	1.54	1.53	1.5
		Amps	2.9	2.9	2.9	3.0	3.4	3.4	3.4	3.4	3.9	3.9	3.8	3.9	4.4	4.4	4.4	4.4	5.0	5.0	5.0	5.0	5.7	5.7	5.7	5.7
	588	MBh	17.8	18.0	18.6	19.4	17.6	17.9	18.4	19.2	17.2	17.4	18.0	18.8	16.4	16.6	17.2	18.0	15.4	15.7	16.2	17.0	14.5	14.8	15.3	16.1
		S/T	0.80	0.72	0.58	0.4	1.00	0.73	0.59	0.4	1.00	0.75	0.62	0.5	1.00	0.77	0.63	0.5	1.00	1.00	0.66	0.5	1.00	1.00	0.71	0.6
		ΔT	22	20	17	14	22	20	17	14	22	21	17	14	22	20	17	14	22	20	17	13	23	21	18	14
		kW	0.91	0.91	0.91	0.92	1.01	1.01	1.01	1.02	1.13	1.13	1.12	1.13	1.25	1.25	1.25	1.25	1.38	1.38	1.38	1.39	1.54	1.54	1.54	1.55
		Amps	3.0	3.0	3.0	3.0	3.4	3.4	3.4	3.4	3.9	3.9	3.9	3.9	4.4	4.4	4.4	4.4	5.0	5.0	5.0	5.0	5.7	5.7	5.7	5.7
	630	MBh	17.9	18.2	18.7	19.5	17.8	18.0	18.6	19.4	17.3	17.6	18.1	18.9	16.5	16.8	17.3	18.1	15.6	15.8	16.4	17.2	14.7	14.9	15.5	16.3
		S/T	0.82	0.74	0.61	0.5	1.00	0.75	0.61	0.5	1.00	0.77	0.64	0.5	1.00	0.79	0.66	0.5	1.00	1.00	0.68	0.5	1.00	1.00	0.73	0.6
		ΔT	22	20	17	13	22	20	16	13	22	20	17	13	22	20	16	13	21	20	16	13	22	21	17	14
		kW	0.92	0.92	0.91	0.9	1.02	1.02	1.02	1.0	1.13	1.13	1.13	1.1	1.25	1.25	1.25	1.3	1.39	1.39	1.38	1.4	1.55	1.54	1.54	1.6
		Amps	3.0	3.0	3.0	3.0	3.4	3.4	3.4	3.4	3.9	3.9	3.9	3.9	4.4	4.4	4.4	4.4	5.0	5.0	5.0	5.0	5.7	5.7	5.7	5.7

IDB = Entering Indoor Dry Bulb Temperature
High and low pressures are measured at the liquid and suction service valves.

Shaded area is ACCA (TVA) conditions

kW = Total system power
Amps = outdoor unit amps (comp.+fan)

*Expanded Cooling Data — GLXT7CA2410**/CA*TA2422*3A*+EEP - Low Stage (cont.)*

			Outdoor Ambient Temperature																							
			65ºF				75ºF				85ºF				95ºF				105ºF				115ºF			
			Entering Indoor Wet Bulb Temperature																							
IDB	Airflow		59	63	67	71	59	63	67	71	59	63	67	71	59	63	67	71	59	63	67	71	59	63	67	71
80	490	MBh	17.6	17.8	18.4	19.2	17.4	17.7	18.2	19.0	17.0	17.2	17.7	18.5	16.2	16.4	17.0	17.8	15.2	15.5	16.0	16.8	14.3	14.6	15.1	15.9
		S/T	1.00	0.76	0.62	0.5	1.00	0.76	0.63	0.5	1.00	0.79	0.65	0.5	1.00	1.00	0.67	0.5	1.00	1.00	0.70	0.6	1.00	1.00	0.75	0.6
		ΔT	28	26	22	19	28	26	22	19	28	26	23	19	28	26	22	19	27	26	22	19	28	27	23	20
		kW	0.91	0.91	0.91	0.9	1.01	1.01	1.01	1.0	1.12	1.12	1.12	1.1	1.24	1.24	1.24	1.2	1.38	1.38	1.37	1.4	1.54	1.54	1.53	1.5
		Amps	2.9	2.9	2.9	3.0	3.4	3.4	3.4	3.4	3.9	3.9	3.8	3.9	4.4	4.4	4.4	4.4	5.0	5.0	5.0	5.0	5.7	5.7	5.7	5.7
	588	MBh	17.9	18.1	18.7	19.5	17.7	18.0	18.5	19.3	17.3	17.5	18.0	18.8	16.5	16.7	**17.3**	18.1	15.5	15.8	16.3	17.1	14.6	14.9	15.4	16.2
		S/T	1.00	0.85	0.71	0.6	1.00	0.85	0.72	0.6	1.00	1.00	0.74	0.6	1.00	1.00	**0.76**	0.6	1.00	1.00	0.78	0.6	1.00	1.00	1.00	0.7
		ΔT	26	24	21	18	26	24	21	17	26	25	21	18	26	24	**21**	17	26	24	21	17	27	25	22	18
		kW	0.92	0.91	0.91	0.92	1.02	1.01	1.01	1.02	1.13	1.13	1.13	1.13	1.25	1.25	**1.25**	1.25	1.38	1.38	1.38	1.39	1.54	1.54	1.54	1.55
		Amps	3.0	3.0	3.0	3.0	3.4	3.4	3.4	3.4	3.9	3.9	3.9	3.9	4.4	4.4	**4.4**	4.4	5.0	5.0	5.0	5.0	5.7	5.7	5.7	5.7
	630	MBh	18.0	18.3	18.8	19.6	17.9	18.1	18.7	19.5	17.4	17.7	18.2	19.0	16.6	16.9	17.4	18.2	15.7	15.9	16.4	17.2	14.8	15.0	15.6	16.4
		S/T	1.00	0.87	0.73	0.6	1.00	0.87	0.74	0.6	1.00	1.00	0.76	0.6	1.00	1.00	0.78	0.6	1.00	1.00	0.80	0.7	1.00	1.00	1.00	0.7
		ΔT	26	24	20	17	26	24	20	17	26	24	21	17	26	24	20	17	25	24	20	17	26	25	21	18
		kW	0.92	0.92	0.92	0.9	1.02	1.02	1.02	1.0	1.13	1.13	1.13	1.1	1.25	1.25	1.25	1.3	1.39	1.39	1.38	1.4	1.55	1.55	1.54	1.6
		Amps	3.0	3.0	3.0	3.0	3.4	3.4	3.4	3.4	3.9	3.9	3.9	3.9	4.4	4.4	4.4	4.5	5.0	5.0	5.0	5.0	5.7	5.7	5.7	5.7
85	490	MBh	17.9	18.1	18.7	19.5	17.7	18.0	18.5	19.3	17.3	17.5	18.0	18.8	16.5	16.7	17.3	18.1	15.5	15.8	16.3	17.1	14.6	14.9	15.4	16.2
		S/T	1.00	0.86	0.72	0.6	1.00	1.00	0.73	0.6	1.00	1.00	0.76	0.6	1.00	1.00	0.77	0.6	1.00	1.00	1.00	0.7	1.00	1.00	1.00	0.7
		ΔT	31	29	26	23	31	29	26	23	31	30	26	23	31	29	26	22	31	29	26	22	32	30	27	23
		kW	0.91	0.91	0.91	0.9	1.01	1.01	1.01	1.0	1.12	1.12	1.12	1.1	1.24	1.24	1.24	1.2	1.38	1.38	1.38	1.4	1.54	1.54	1.54	1.5
		Amps	2.9	2.9	2.9	3.0	3.4	3.4	3.4	3.4	3.9	3.9	3.9	3.9	4.4	4.4	4.4	4.4	5.0	5.0	5.0	5.0	5.7	5.7	5.7	5.7
	588	MBh	18.2	18.4	19.0	19.8	18.0	18.3	18.8	19.6	17.6	17.8	18.3	19.1	16.8	17.0	17.6	18.4	15.8	16.1	16.6	17.4	14.9	15.2	15.7	16.5
		S/T	1.00	0.95	0.81	0.7	1.00	1.00	0.82	0.7	1.00	1.00	0.84	0.7	1.00	1.00	1.00	0.7	1.00	1.00	1.00	0.7	1.00	1.00	1.00	0.8
		ΔT	30	28	25	21	30	28	24	21	30	28	25	21	30	28	24	21	29	28	24	21	30	29	25	22
		kW	0.92	0.92	0.91	0.92	1.02	1.02	1.01	1.02	1.13	1.13	1.13	1.13	1.25	1.25	1.25	1.26	1.39	1.39	1.38	1.39	1.55	1.54	1.54	1.55
		Amps	3.0	3.0	3.0	3.0	3.4	3.4	3.4	3.4	3.9	3.9	3.9	3.9	4.4	4.4	4.4	4.4	5.0	5.0	5.0	5.0	5.7	5.7	5.7	5.7
	630	MBh	18.3	18.6	19.1	19.9	18.2	18.4	19.0	19.8	17.7	18.0	18.5	19.3	16.9	17.2	17.7	18.5	16.0	16.2	16.7	17.5	15.1	15.3	15.9	16.7
		S/T	1.00	1.00	0.83	0.7	1.00	1.00	0.84	0.7	1.00	1.00	0.86	0.7	1.00	1.00	1.00	0.7	1.00	1.00	1.00	0.8	1.00	1.00	1.00	0.8
		ΔT	29	27	24	21	29	27	24	20	29	28	24	21	29	27	24	20	29	27	24	20	30	28	25	21
		kW	0.92	0.92	0.92	0.9	1.02	1.02	1.02	1.0	1.13	1.13	1.13	1.1	1.25	1.25	1.25	1.3	1.39	1.39	1.39	1.4	1.55	1.55	1.55	1.6
		Amps	3.0	3.0	3.0	3.0	3.4	3.4	3.4	3.4	3.9	3.9	3.9	3.9	4.4	4.4	4.4	4.5	5.0	5.0	5.0	5.0	5.7	5.7	5.7	5.7

IDB = Entering Indoor Dry Bulb Temperature

High and low pressures are measured at the liquid and suction service valves.

Shaded area is ACCA (TVA) conditions

kW = Total system power

Amps = outdoor unit amps (comp.+fan)

			Outdoor Ambient Temperature																							
			65ºF				75ºF				85ºF				95ºF				105ºF				115ºF			
			Entering Indoor Wet Bulb Temperature																							
IDB	Airflow		59	63	67	71	59	63	67	71	59	63	67	71	59	63	67	71	59	63	67	71	59	63	67	71
70	1120	MBh	36.1	36.6	37.6	-	35.8	36.3	37.3	-	34.8	35.3	36.4	-	33.2	33.7	34.8	-	31.3	31.8	32.8	-	29.5	30.0	31.1	-
		S/T	0.64	0.57	0.44	-	0.65	0.57	0.44	-	0.67	0.60	0.47	-	1.00	0.62	0.49	-	1.00	0.64	0.51	-	1.00	0.69	0.56	-
		ΔT	20	18	14	-	20	18	14	-	20	18	15	-	20	18	14	-	20	18	14	-	21	19	15	-
		kW	2.09	2.09	2.08	-	2.33	2.33	2.33	-	2.60	2.60	2.60	-	2.90	2.90	2.89	-	3.23	3.22	3.22	-	3.61	3.61	3.60	-
		Amps	6.9	6.9	6.9	-	8.0	8.0	8.0	-	9.2	9.2	9.1	-	10.4	10.4	10.4	-	11.9	11.9	11.8	-	13.5	13.5	13.5	-
	1200	MBh	36.4	36.9	38.0	-	36.1	36.6	37.6	-	35.1	35.6	36.7	-	33.5	34.0	35.1	-	31.6	32.1	33.1	-	29.8	30.3	31.4	-
		S/T	0.66	0.59	0.46	-	0.67	0.59	0.46	-	0.69	0.62	0.49	-	1.00	0.64	0.51	-	1.00	0.66	0.53	-	1.00	0.71	0.58	-
		ΔT	19	17	14	-	19	17	14	-	19	18	14	-	19	17	14	-	19	17	13	-	20	18	15	-
		kW	2.10	2.09	2.09	-	2.34	2.34	2.33	-	2.61	2.61	2.60	-	2.90	2.90	2.90	-	3.23	3.23	3.23	-	3.62	3.61	3.61	-
		Amps	7.0	7.0	6.9	-	8.0	8.0	8.0	-	9.2	9.2	9.2	-	10.5	10.5	10.4	-	11.9	11.9	11.9	-	13.6	13.6	13.5	-
	1350	MBh	37.1	37.6	38.6	-	36.7	37.2	38.3	-	35.8	36.3	37.4	-	34.2	34.7	35.8	-	32.3	32.8	33.8	-	30.5	31.0	32.0	-
		S/T	0.68	0.61	0.48	-	0.69	0.62	0.48	-	0.71	0.64	0.51	-	1.00	0.66	0.53	-	1.00	0.68	0.55	-	1.00	0.73	0.60	-
		ΔT	18	16	13	-	18	16	13	-	19	17	13	-	18	16	13	-	18	16	12	-	19	17	14	-
		kW	2.11	2.10	2.10	-	2.35	2.35	2.34	-	2.62	2.62	2.61	-	2.91	2.91	2.91	-	3.24	3.24	3.24	-	3.63	3.62	3.62	-
		Amps	7.0	7.0	7.0	-	8.1	8.1	8.0	-	9.2	9.2	9.2	-	10.5	10.5	10.5	-	11.9	11.9	11.9	-	13.6	13.6	13.6	-
75	1120	MBh	36.1	36.6	37.7	39.3	35.8	36.3	37.3	39.0	34.8	35.4	36.4	38.0	33.2	33.8	34.8	36.4	31.3	31.8	32.9	34.5	29.5	30.0	31.1	32.7
		S/T	0.76	0.69	0.56	0.4	0.77	0.70	0.57	0.4	1.00	0.72	0.59	0.5	1.00	0.74	0.61	0.5	1.00	0.76	0.63	0.5	1.00	1.00	0.68	0.5
		ΔT	24	22	19	15	24	22	19	15	24	22	19	15	24	22	18	15	24	22	18	14	25	23	19	16
		kW	2.09	2.09	2.08	2.1	2.33	2.33	2.32	2.3	2.60	2.60	2.60	2.6	2.90	2.89	2.89	2.9	3.22	3.22	3.22	3.2	3.61	3.61	3.60	3.6
		Amps	6.9	6.9	6.9	7.0	8.0	8.0	8.0	8.0	9.2	9.2	9.1	9.2	10.4	10.4	10.4	10.5	11.9	11.9	11.8	11.9	13.5	13.5	13.5	13.6
	1200	MBh	36.4	36.9	38.0	39.6	36.1	36.6	37.7	39.3	35.2	35.7	36.7	38.3	33.6	34.1	35.1	36.7	31.6	32.1	33.2	34.8	29.8	30.3	31.4	33.0
		S/T	0.79	0.71	0.58	0.4	0.79	0.72	0.59	0.5	1.00	0.74	0.61	0.5	1.00	0.76	0.63	0.5	1.00	0.78	0.65	0.5	1.00	1.00	0.70	0.6
		ΔT	24	22	18	14	24	22	18	14	24	22	18	14	23	22	18	14	23	21	18	14	24	22	19	15
		kW	2.09	2.09	2.09	2.11	2.34	2.34	2.33	2.35	2.61	2.61	2.60	2.62	2.90	2.90	2.90	2.91	3.23	3.23	3.22	3.24	3.61	3.61	3.61	3.63
		Amps	7.0	6.9	6.9	7.0	8.0	8.0	8.0	8.1	9.2	9.2	9.2	9.2	10.5	10.5	10.4	10.5	11.9	11.9	11.9	11.9	13.6	13.6	13.5	13.6
	1350	MBh	37.1	37.6	38.6	40.3	36.8	37.3	38.3	40.0	35.8	36.3	37.4	39.0	34.2	34.7	35.8	37.4	32.3	32.8	33.8	35.5	30.5	31.0	32.1	33.7
		S/T	0.81	0.73	0.60	0.5	1.00	0.74	0.61	0.5	1.00	0.76	0.63	0.5	1.00	0.78	0.65	0.5	1.00	0.80	0.67	0.5	1.00	1.00	0.72	0.6
		ΔT	23	21	17	13	23	21	17	13	23	21	17	13	23	21	17	13	22	20	17	13	23	22	18	14
		kW	2.10	2.10	2.10	2.1	2.35	2.35	2.34	2.4	2.62	2.62	2.61	2.6	2.91	2.91	2.91	2.9	3.24	3.24	3.23	3.3	3.63	3.62	3.62	3.6
		Amps	7.0	7.0	7.0	7.1	8.1	8.0	8.0	8.1	9.2	9.2	9.2	9.3	10.5	10.5	10.5	10.6	11.9	11.9	11.9	12.0	13.6	13.6	13.6	13.7

IDB = Entering Indoor Dry Bulb Temperature
High and low pressures are measured at the liquid and suction service valves.

Shaded area is ACCA (TVA) conditions

kW = Total system power
Amps = outdoor unit amps (comp.+fan)

Expanded Cooling Data — GLXT7CA3610**/CA*TA3626*3A*+EEP - HIGH STAGE (cont.)

			Outdoor Ambient Temperature																							
			65ºF				75ºF				85ºF				95ºF				105ºF				115ºF			
			Entering Indoor Wet Bulb Temperature																							
IDB	Airflow		59	63	67	71	59	63	67	71	59	63	67	71	59	63	67	71	59	63	67	71	59	63	67	71
80	1120	MBh	36.3	36.8	37.8	39.5	36.0	36.5	37.5	39.2	35.0	35.5	36.6	38.2	33.4	33.9	**35.0**	36.6	31.5	32.0	33.0	34.7	29.7	30.2	31.3	32.9
		S/T	1.00	0.81	0.68	0.5	1.00	0.82	0.69	0.6	1.00	0.84	0.71	0.6	1.00	1.00	**0.73**	0.6	1.00	1.00	0.75	0.6	1.00	1.00	0.80	0.7
		ΔT	28	26	23	19	28	26	23	19	29	27	23	19	28	26	**23**	19	28	26	23	19	29	27	24	20
		kW	2.09	2.09	2.08	2.1	2.33	2.33	2.33	2.3	2.60	2.60	2.60	2.6	2.90	2.89	**2.89**	2.9	3.22	3.22	3.22	3.2	3.61	3.61	3.60	3.6
		Amps	6.9	6.9	6.9	7.0	8.0	8.0	8.0	8.0	9.2	9.2	9.1	9.2	10.4	10.4	**10.4**	10.5	11.9	11.9	11.8	11.9	13.5	13.5	13.5	13.6
	1200	MBh	36.6	37.1	38.2	39.8	36.3	36.8	37.8	39.5	35.3	35.8	36.9	38.5	33.7	34.2	35.3	36.9	31.8	32.3	33.4	35.0	30.0	30.5	31.6	33.2
		S/T	1.00	0.83	0.70	0.6	1.00	0.84	0.71	0.6	1.00	0.86	0.73	0.6	1.00	1.00	0.75	0.6	1.00	1.00	0.77	0.6	1.00	1.00	0.82	0.7
		ΔT	28	26	22	19	28	26	22	18	28	26	23	19	28	26	22	18	28	26	22	18	29	27	23	19
		kW	2.10	2.09	2.09	2.11	2.34	2.34	2.33	2.35	2.61	2.61	2.60	2.62	2.90	2.90	2.90	2.92	3.23	3.23	3.23	3.24	3.62	3.61	3.61	3.63
		Amps	7.0	7.0	6.9	7.0	8.0	8.0	8.0	8.1	9.2	9.2	9.2	9.3	10.5	10.5	10.4	10.5	11.9	11.9	11.9	12.0	13.6	13.6	13.5	13.6
	1350	MBh	37.3	37.8	38.8	40.5	36.9	37.4	38.5	40.1	36.0	36.5	37.6	39.2	34.4	34.9	36.0	37.6	32.5	33.0	34.0	35.7	30.7	31.2	32.2	33.9
		S/T	1.00	0.85	0.72	0.6	1.00	0.86	0.73	0.6	1.00	0.88	0.75	0.6	1.00	1.00	0.77	0.6	1.00	1.00	0.79	0.7	1.00	1.00	0.84	0.7
		ΔT	27	25	21	18	27	25	21	17	27	25	22	18	27	25	21	17	27	25	21	17	28	26	22	18
		kW	2.11	2.10	2.10	2.1	2.35	2.35	2.34	2.4	2.62	2.62	2.61	2.6	2.91	2.91	2.91	2.9	3.24	3.24	3.24	3.3	3.63	3.62	3.62	3.6
		Amps	7.0	7.0	7.0	7.1	8.1	8.1	8.0	8.1	9.2	9.2	9.2	9.3	10.5	10.5	10.5	10.6	11.9	11.9	11.9	12.0	13.6	13.6	13.6	13.7
85	1120	MBh	36.9	37.4	38.4	40.1	36.6	37.1	38.1	39.8	35.6	36.1	37.2	38.8	34.0	34.5	35.6	37.2	32.1	32.6	33.6	35.3	30.3	30.8	31.9	33.5
		S/T	1.00	0.91	0.78	0.6	1.00	1.00	0.78	0.6	1.00	1.00	0.81	0.7	1.00	1.00	0.83	0.7	1.00	1.00	0.85	0.7	1.00	1.00	1.00	0.8
		ΔT	32	30	27	23	32	30	27	23	32	31	27	23	32	30	27	23	32	30	26	23	33	31	28	24
		kW	2.09	2.09	2.09	2.1	2.34	2.33	2.33	2.3	2.61	2.61	2.60	2.6	2.90	2.90	2.90	2.9	3.23	3.23	3.22	3.2	3.61	3.61	3.61	3.6
		Amps	7.0	6.9	6.9	7.0	8.0	8.0	8.0	8.1	9.2	9.2	9.2	9.2	10.5	10.5	10.4	10.5	11.9	11.9	11.9	11.9	13.6	13.6	13.5	13.6
	1200	MBh	37.2	37.7	38.8	40.4	36.9	37.4	38.4	40.1	35.9	36.4	37.5	39.1	34.3	34.8	35.9	37.5	32.4	32.9	34.0	35.6	30.6	31.1	32.2	33.8
		S/T	1.00	0.93	0.80	0.7	1.00	1.00	0.81	0.7	1.00	1.00	0.83	0.7	1.00	1.00	0.85	0.7	1.00	1.00	0.87	0.7	1.00	1.00	1.00	0.8
		ΔT	32	30	26	22	32	30	26	22	32	30	26	23	32	30	26	22	31	29	26	22	33	31	27	23
		kW	2.10	2.10	2.09	2.11	2.34	2.34	2.34	2.36	2.61	2.61	2.61	2.63	2.91	2.91	2.90	2.92	3.24	3.23	3.23	3.25	3.62	3.62	3.61	3.63
		Amps	7.0	7.0	7.0	7.0	8.0	8.0	8.0	8.1	9.2	9.2	9.2	9.3	10.5	10.5	10.5	10.5	11.9	11.9	11.9	12.0	13.6	13.6	13.6	13.6
	1350	MBh	37.9	38.4	39.4	41.1	37.5	38.0	39.1	40.7	36.6	37.1	38.2	39.8	35.0	35.5	36.6	38.2	33.1	33.6	34.6	36.3	31.3	31.8	32.8	34.5
		S/T	1.00	0.95	0.82	0.7	1.00	1.00	0.83	0.7	1.00	1.00	0.85	0.7	1.00	1.00	0.87	0.7	1.00	1.00	1.00	0.8	1.00	1.00	1.00	0.8
		ΔT	31	29	25	21	31	29	25	21	31	29	25	22	31	29	25	21	30	28	25	21	32	30	26	22
		kW	2.11	2.11	2.10	2.1	2.35	2.35	2.35	2.4	2.62	2.62	2.62	2.6	2.92	2.92	2.91	2.9	3.25	3.24	3.24	3.3	3.63	3.63	3.62	3.6
		Amps	7.0	7.0	7.0	7.1	8.1	8.1	8.1	8.1	9.3	9.3	9.2	9.3	10.5	10.5	10.5	10.6	12.0	12.0	11.9	12.0	13.6	13.6	13.6	13.7

IDB = Entering Indoor Dry Bulb Temperature

High and low pressures are measured at the liquid and suction service valves.

Shaded area is ACCA (TVA) conditions

kW = Total system power

Amps = outdoor unit amps (comp.+fan)

Expanded Cooling Data — GLXT7CA3610**/CA*TA3626*3A*+EEP - LOW STAGE

			Outdoor Ambient Temperature																							
			65ºF				75ºF				85ºF				95ºF				105ºF				115ºF			
			Entering Indoor Wet Bulb Temperature																							
IDB	Airflow		59	63	67	71	59	63	67	71	59	63	67	71	59	63	67	71	59	63	67	71	59	63	67	71
70	784	MBh	25.8	26.1	26.9	-	25.5	25.9	26.6	-	24.9	25.2	26.0	-	23.7	24.1	24.8	-	22.3	22.7	23.4	-	21.0	21.4	22.1	-
		S/T	0.63	0.55	0.42	-	0.64	0.56	0.43	-	0.66	0.59	0.45	-	1.00	0.60	0.47	-	1.00	0.63	0.49	-	1.00	0.68	0.54	-
		ΔT	20	18	14	-	20	18	14	-	20	18	15	-	20	18	14	-	19	18	14	-	21	19	15	-
		kW	1.31	1.31	1.31	-	1.46	1.46	1.46	-	1.63	1.63	1.63	-	1.82	1.82	1.81	-	2.02	2.02	2.02	-	2.27	2.27	2.26	-
		Amps	4.3	4.3	4.3	-	5.0	5.0	5.0	-	5.8	5.7	5.7	-	6.6	6.5	6.5	-	7.5	7.4	7.4	-	8.5	8.5	8.5	-
	840	MBh	25.9	26.3	27.1	-	25.7	26.1	26.8	-	25.0	25.4	26.2	-	23.9	24.3	25.0	-	22.5	22.8	23.6	-	21.2	21.6	22.3	-
		S/T	0.66	0.58	0.45	-	0.66	0.59	0.45	-	0.69	0.61	0.48	-	1.00	0.63	0.50	-	1.00	0.65	0.52	-	1.00	0.71	0.57	-
		ΔT	19	17	14	-	19	17	14	-	19	17	14	-	19	17	14	-	19	17	13	-	20	18	15	-
		kW	1.31	1.31	1.31	-	1.47	1.47	1.46	-	1.64	1.64	1.63	-	1.82	1.82	1.82	-	2.03	2.03	2.02	-	2.27	2.27	2.27	-
		Amps	4.4	4.4	4.3	-	5.0	5.0	5.0	-	5.8	5.8	5.8	-	6.6	6.6	6.6	-	7.5	7.5	7.5	-	8.5	8.5	8.5	-
	945	MBh	26.3	26.7	27.5	-	26.1	26.5	27.2	-	25.4	25.8	26.6	-	24.3	24.7	25.4	-	22.9	23.3	24.0	-	21.6	22.0	22.7	-
		S/T	0.69	0.62	0.48	-	0.70	0.62	0.49	-	1.00	0.65	0.51	-	1.00	0.67	0.53	-	1.00	0.69	0.55	-	1.00	1.00	0.60	-
		ΔT	18	16	13	-	18	16	13	-	18	17	13	-	18	16	13	-	18	16	13	-	19	17	14	-
		kW	1.32	1.32	1.32	-	1.47	1.47	1.47	-	1.64	1.64	1.64	-	1.83	1.83	1.83	-	2.04	2.03	2.03	-	2.28	2.28	2.27	-
		Amps	4.4	4.4	4.4	-	5.1	5.1	5.0	-	5.8	5.8	5.8	-	6.6	6.6	6.6	-	7.5	7.5	7.5	-	8.6	8.5	8.5	-
75	1120	MBh	25.8	26.1	26.9	28.1	25.5	25.9	26.7	27.8	24.9	25.2	26.0	27.2	23.7	24.1	24.8	26.0	22.3	22.7	23.4	24.6	21.0	21.4	22.2	23.3
		S/T	0.76	0.68	0.55	0.4	1.00	0.69	0.55	0.4	1.00	0.71	0.58	0.4	1.00	0.73	0.60	0.5	1.00	0.75	0.62	0.5	1.00	1.00	0.67	0.5
		ΔT	24	22	18	15	24	22	18	15	24	22	19	15	24	22	18	15	24	22	18	15	25	23	19	16
		kW	1.31	1.31	1.31	1.3	1.46	1.46	1.46	1.5	1.63	1.63	1.63	1.6	1.82	1.82	1.81	1.8	2.02	2.02	2.02	2.0	2.27	2.26	2.26	2.3
		Amps	4.3	4.3	4.3	4.4	5.0	5.0	5.0	5.0	5.7	5.7	5.7	5.8	6.6	6.5	6.5	6.6	7.4	7.4	7.4	7.5	8.5	8.5	8.5	8.5
	1200	MBh	26.0	26.3	27.1	28.2	25.7	26.1	26.9	28.0	25.1	25.4	26.2	27.4	23.9	24.3	25.0	26.2	22.5	22.9	23.6	24.8	21.2	21.6	22.3	23.5
		S/T	0.79	0.71	0.58	0.4	1.00	0.72	0.58	0.4	1.00	0.74	0.61	0.5	1.00	0.76	0.63	0.5	1.00	1.00	0.65	0.5	1.00	1.00	0.70	0.6
		ΔT	23	21	18	14	23	21	18	14	24	22	18	14	23	21	18	14	23	21	18	14	24	22	19	15
		kW	1.31	1.31	1.31	1.32	1.47	1.46	1.46	1.47	1.64	1.64	1.63	1.64	1.82	1.82	1.82	1.83	2.03	2.03	2.02	2.04	2.27	2.27	2.27	2.28
		Amps	4.4	4.4	4.3	4.4	5.0	5.0	5.0	5.1	5.8	5.8	5.7	5.8	6.6	6.6	6.6	6.6	7.5	7.5	7.4	7.5	8.5	8.5	8.5	8.6
	1350	MBh	26.4	26.7	27.5	28.7	26.1	26.5	27.3	28.4	25.5	25.8	26.6	27.8	24.3	24.7	25.4	26.6	22.9	23.3	24.0	25.2	21.6	22.0	22.7	23.9
		S/T	0.82	0.74	0.61	0.5	1.00	0.75	0.62	0.5	1.00	0.77	0.64	0.5	1.00	0.79	0.66	0.5	1.00	1.00	0.68	0.5	1.00	1.00	0.73	0.6
		ΔT	22	20	17	13	22	20	17	13	23	21	17	14	22	20	17	13	22	20	17	13	23	21	18	14
		kW	1.32	1.32	1.32	1.3	1.47	1.47	1.47	1.5	1.64	1.64	1.64	1.7	1.83	1.83	1.82	1.8	2.03	2.03	2.03	2.0	2.28	2.28	2.27	2.3
		Amps	4.4	4.4	4.4	4.4	5.1	5.0	5.0	5.1	5.8	5.8	5.8	5.8	6.6	6.6	6.6	6.6	7.5	7.5	7.5	7.5	8.5	8.5	8.5	8.6

IDB = Entering Indoor Dry Bulb Temperature
High and low pressures are measured at the liquid and suction service valves.

Shaded area is ACCA (TVA) conditions

kW = Total system power
Amps = outdoor unit amps (comp.+fan)

*Expanded Cooling Data — GLXT7CA3610**/CA*TA3626*3A*+EEP - Low Stage (cont.)*

			Outdoor Ambient Temperature																							
			65ºF				75ºF				85ºF				95ºF				105ºF				115ºF			
			Entering Indoor Wet Bulb Temperature																							
IDB	Airflow		59	63	67	71	59	63	67	71	59	63	67	71	59	63	67	71	59	63	67	71	59	63	67	71
80	784	MBh	25.9	26.3	27.0	28.2	25.7	26.0	26.8	28.0	25.0	25.4	26.1	27.3	23.9	24.2	25.0	26.1	22.4	22.8	23.6	24.7	21.2	21.5	22.3	23.5
		S/T	1.00	0.81	0.67	0.5	1.00	0.81	0.68	0.5	1.00	0.84	0.70	0.6	1.00	1.00	0.72	0.6	1.00	1.00	0.74	0.6	1.00	1.00	0.79	0.7
		ΔT	28	26	23	19	28	26	23	19	28	26	23	19	28	26	23	19	28	26	22	19	29	27	23	20
		kW	1.31	1.31	1.31	1.3	1.46	1.46	1.46	1.5	1.63	1.63	1.63	1.6	1.82	1.82	1.81	1.8	2.02	2.02	2.02	2.0	2.27	2.27	2.26	2.3
		Amps	4.3	4.3	4.3	4.4	5.0	5.0	5.0	5.0	5.8	5.7	5.7	5.8	6.6	6.5	6.5	6.6	7.5	7.4	7.4	7.5	8.5	8.5	8.5	8.5
	840	MBh	26.1	26.4	27.2	28.4	25.9	26.2	27.0	28.2	25.2	25.6	26.3	27.5	24.0	24.4	**25.2**	26.3	22.6	23.0	23.8	24.9	21.3	21.7	22.5	23.6
		S/T	1.00	0.83	0.70	0.6	1.00	0.84	0.71	0.6	1.00	0.86	0.73	0.6	1.00	1.00	**0.75**	0.6	1.00	1.00	0.77	0.6	1.00	1.00	0.82	0.7
		ΔT	27	26	22	18	27	26	22	18	28	26	22	19	27	25	**22**	18	27	25	22	18	28	26	23	19
		kW	1.31	1.31	1.31	1.32	1.47	1.47	1.46	1.47	1.64	1.64	1.63	1.65	1.82	1.82	**1.82**	1.83	2.03	2.03	2.02	2.04	2.27	2.27	2.27	2.28
		Amps	4.4	4.4	4.3	4.4	5.0	5.0	5.0	5.1	5.8	5.8	5.8	5.8	6.6	6.6	**6.6**	6.6	7.5	7.5	7.5	7.5	8.5	8.5	8.5	8.6
	945	MBh	26.5	26.9	27.6	28.8	26.3	26.6	27.4	28.6	25.6	26.0	26.7	27.9	24.4	24.8	25.6	26.7	23.0	23.4	24.2	25.3	21.8	22.1	22.9	24.0
		S/T	1.00	0.87	0.73	0.6	1.00	0.87	0.74	0.6	1.00	1.00	0.76	0.6	1.00	1.00	0.78	0.6	1.00	1.00	0.81	0.7	1.00	1.00	1.00	0.7
		ΔT	26	25	21	17	26	25	21	17	27	25	21	18	26	25	21	17	26	24	21	17	27	25	22	18
		kW	1.32	1.32	1.32	1.3	1.47	1.47	1.47	1.5	1.64	1.64	1.64	1.7	1.83	1.83	1.82	1.8	2.04	2.03	2.03	2.0	2.28	2.28	2.27	2.3
		Amps	4.4	4.4	4.4	4.4	5.1	5.1	5.0	5.1	5.8	5.8	5.8	5.8	6.6	6.6	6.6	6.6	7.5	7.5	7.5	7.5	8.5	8.5	8.5	8.6
85	784	MBh	26.3	26.7	27.5	28.6	26.1	26.5	27.2	28.4	25.4	25.8	26.6	27.7	24.3	24.6	25.4	26.6	22.9	23.2	24.0	25.2	21.6	22.0	22.7	23.9
		S/T	1.00	0.91	0.77	0.6	1.00	1.00	0.78	0.6	1.00	1.00	0.80	0.7	1.00	1.00	0.82	0.7	1.00	1.00	1.00	0.7	1.00	1.00	1.00	0.8
		ΔT	32	30	26	23	32	30	26	23	32	30	27	23	32	30	26	23	31	30	26	22	33	31	27	24
		kW	1.31	1.31	1.31	1.3	1.47	1.46	1.46	1.5	1.64	1.64	1.63	1.6	1.82	1.82	1.82	1.8	2.03	2.03	2.02	2.0	2.27	2.27	2.27	2.3
		Amps	4.4	4.4	4.3	4.4	5.0	5.0	5.0	5.1	5.8	5.8	5.7	5.8	6.6	6.6	6.5	6.6	7.5	7.5	7.4	7.5	8.5	8.5	8.5	8.6
	840	MBh	26.5	26.9	27.6	28.8	26.3	26.7	27.4	28.6	25.6	26.0	26.7	27.9	24.5	**24.8**	25.6	26.8	23.1	23.4	24.2	25.4	21.8	22.1	22.9	24.1
		S/T	1.00	0.93	0.80	0.7	1.00	1.00	0.81	0.7	1.00	1.00	0.83	0.7	1.00	**1.00**	0.85	0.7	1.00	1.00	1.00	0.7	1.00	1.00	1.00	0.8
		ΔT	31	29	26	22	31	29	26	22	31	29	26	22	31	**29**	26	22	31	29	25	22	32	30	27	23
		kW	1.32	1.32	1.31	1.32	1.47	1.47	1.47	1.48	1.64	1.64	1.64	1.65	1.83	**1.82**	1.82	1.83	2.03	2.03	2.03	2.04	2.27	2.27	2.27	2.28
		Amps	4.4	4.4	4.4	4.4	5.0	5.0	5.0	5.1	5.8	5.8	5.8	5.8	6.6	**6.6**	6.6	6.6	7.5	7.5	7.5	7.5	8.5	8.5	8.5	8.6
	945	MBh	26.9	27.3	28.0	29.2	26.7	27.1	27.8	29.0	26.0	26.4	27.2	28.3	24.9	**25.2**	26.0	27.2	23.5	23.8	24.6	25.8	22.2	22.5	23.3	24.5
		S/T	1.00	0.97	0.83	0.7	1.00	1.00	0.84	0.7	1.00	1.00	0.86	0.7	1.00	**1.00**	0.88	0.7	1.00	1.00	1.00	0.8	1.00	1.00	1.00	0.8
		ΔT	30	28	25	21	30	28	25	21	30	29	25	21	30	28	25	21	30	28	24	21	31	29	26	22
		kW	1.32	1.32	1.32	1.3	1.48	1.48	1.47	1.5	1.65	1.65	1.64	1.7	1.83	1.83	1.83	1.8	2.04	2.04	2.03	2.0	2.28	2.28	2.28	2.3
		Amps	4.4	4.4	4.4	4.4	5.1	5.1	5.1	5.1	5.8	5.8	5.8	5.8	6.6	6.6	6.6	6.6	7.5	7.5	7.5	7.5	8.6	8.6	8.5	8.6

IDB = Entering Indoor Dry Bulb Temperature

High and low pressures are measured at the liquid and suction service valves.

Shaded area is ACCA (TVA) conditions

kW = Total system power

Amps = outdoor unit amps (comp.+fan)

Expanded Cooling Data — GLXT7CA4810**/CA*TA6030*3A*+EEP - HIGH STAGE

			Outdoor Ambient Temperature																							
			65ºF				75ºF				85ºF				95ºF				105ºF				115ºF			
			Entering Indoor Wet Bulb Temperature																							
IDB	Airflow		59	63	67	71	59	63	67	71	59	63	67	71	59	63	67	71	59	63	67	71	59	63	67	71
70	1400	MBh	48.4	49.1	50.5	-	48.0	48.7	50.1	-	46.8	47.4	48.9	-	44.6	45.3	46.7	-	42.0	42.7	44.1	-	39.6	40.3	41.7	-
		S/T	0.61	0.54	0.41	-	0.61	0.54	0.42	-	0.63	0.56	0.44	-	0.65	0.58	0.46	-	0.67	0.60	0.48	-	1.00	0.65	0.53	-
		ΔT	1	1	0	-	1	1	0	-	1	1	0	-	1	1	0	-	1	1	0	-	1	1	0	-
		kW	2.88	2.88	2.87	-	3.20	3.20	3.20	-	3.56	3.56	3.56	-	3.95	3.95	3.95	-	4.39	4.39	4.38	-	4.90	4.90	4.89	-
		Amps	9.9	9.9	9.8	-	11.3	11.3	11.2	-	12.8	12.8	12.8	-	14.5	14.5	14.5	-	16.4	16.4	16.4	-	18.7	18.6	18.6	-
	1600	MBh	49.3	50.0	51.4	-	48.9	49.6	51.0	-	47.6	48.3	49.7	-	45.5	46.2	47.6	-	42.9	43.5	45.0	-	40.5	41.1	42.6	-
		S/T	0.64	0.57	0.45	-	0.64	0.58	0.45	-	0.67	0.60	0.47	-	0.68	0.62	0.49	-	1.00	0.64	0.51	-	1.00	0.68	0.56	-
		ΔT	1	1	0	-	1	1	0	-	1	1	0	-	1	1	0	-	1	1	0	-	1	1	0	-
		kW	2.90	2.89	2.89	-	3.22	3.22	3.21	-	3.58	3.58	3.57	-	3.97	3.97	3.96	-	4.41	4.40	4.40	-	4.92	4.91	4.91	-
		Amps	9.9	9.9	9.9	-	11.3	11.3	11.3	-	12.9	12.9	12.9	-	14.6	14.6	14.6	-	16.5	16.5	16.5	-	18.7	18.7	18.7	-
	1800	MBh	50.4	51.1	52.5	-	50.0	50.6	52.1	-	48.7	49.4	50.8	-	46.6	47.2	48.7	-	43.9	44.6	46.0	-	41.5	42.2	43.7	-
		S/T	0.65	0.58	0.45	-	0.65	0.58	0.46	-	0.67	0.60	0.48	-	0.69	0.62	0.50	-	1.00	0.64	0.52	-	1.00	0.69	0.57	-
		ΔT	1	0	0	-	1	0	0	-	1	0	0	-	1	0	0	-	1	0	0	-	1	1	0	-
		kW	2.91	2.91	2.90	-	3.23	3.23	3.23	-	3.59	3.59	3.59	-	3.98	3.98	3.98	-	4.42	4.42	4.41	-	4.93	4.93	4.92	-
		Amps	10.0	10.0	10.0	-	11.4	11.4	11.4	-	13.0	13.0	12.9	-	14.7	14.7	14.6	-	16.6	16.6	16.5	-	18.8	18.8	18.8	-
75	1400	MBh	48.5	49.1	50.6	52.8	48.0	48.7	50.1	52.3	46.8	47.5	48.9	51.1	44.6	45.3	46.8	48.9	42.0	42.7	44.1	46.3	39.6	40.3	41.7	43.9
		S/T	0.72	0.65	0.53	0.4	0.73	0.66	0.54	0.4	0.75	0.68	0.56	0.4	1.00	0.70	0.58	0.4	1.00	0.72	0.60	0.5	1.00	0.77	0.64	0.5
		ΔT	1	1	1	0	1	1	1	0	1	1	1	0	1	1	1	0	1	1	1	0	1	1	1	0
		kW	2.88	2.88	2.87	2.9	3.20	3.20	3.19	3.2	3.56	3.56	3.55	3.6	3.95	3.95	3.94	4.0	4.39	4.39	4.38	4.4	4.90	4.90	4.89	4.9
		Amps	9.9	9.9	9.8	9.9	11.3	11.3	11.2	11.3	12.8	12.8	12.8	12.9	14.5	14.5	14.5	14.6	16.4	16.4	16.4	16.5	18.6	18.6	18.6	18.7
	1600	MBh	49.3	50.0	51.5	53.6	48.9	49.6	51.0	53.2	47.7	48.3	49.8	52.0	45.5	46.2	47.6	49.8	42.9	43.6	45.0	47.2	40.5	41.2	42.6	44.8
		S/T	0.76	0.69	0.56	0.4	0.76	0.69	0.57	0.4	0.78	0.72	0.59	0.5	1.00	0.73	0.61	0.5	1.00	0.75	0.63	0.5	1.00	0.80	0.68	0.5
		ΔT	1	1	1	0	1	1	1	0	1	1	1	0	1	1	1	0	1	1	1	0	1	1	1	0
		kW	2.89	2.89	2.89	2.91	3.22	3.21	3.21	3.23	3.58	3.58	3.57	3.59	3.97	3.97	3.96	3.98	4.40	4.40	4.40	4.42	4.92	4.91	4.91	4.93
		Amps	9.9	9.9	9.9	10.0	11.3	11.3	11.3	11.4	12.9	12.9	12.9	13.0	14.6	14.6	14.6	14.7	16.5	16.5	16.5	16.6	18.7	18.7	18.7	18.8
	1800	MBh	50.4	51.1	52.5	54.7	50.0	50.7	52.1	54.3	48.7	49.4	50.9	53.0	46.6	47.3	48.7	50.9	44.0	44.6	46.1	48.3	41.6	42.3	43.7	45.9
		S/T	0.76	0.69	0.57	0.4	0.77	0.70	0.58	0.4	1.00	0.72	0.60	0.5	1.00	0.74	0.62	0.5	1.00	0.76	0.64	0.5	1.00	0.81	0.68	0.6
		ΔT	1	1	1	0	1	1	1	0	1	1	1	0	1	1	1	0	1	1	0	0	1	1	1	0
		kW	2.91	2.91	2.90	2.9	3.23	3.23	3.22	3.2	3.59	3.59	3.58	3.6	3.98	3.98	3.97	4.0	4.42	4.42	4.41	4.4	4.93	4.93	4.92	4.9
		Amps	10.0	10.0	10.0	10.1	11.4	11.4	11.4	11.5	13.0	13.0	12.9	13.0	14.7	14.6	14.6	14.7	16.6	16.5	16.5	16.6	18.8	18.8	18.7	18.9

IDB = Entering Indoor Dry Bulb Temperature
High and low pressures are measured at the liquid and suction service valves.

Shaded area is ACCA (TVA) conditions

kW = Total system power
Amps = outdoor unit amps (comp.+fan)

Expanded Cooling Data — GLXT7CA4810**/CA*TA6030*3A*+EEP - HIGH STAGE (cont.)

			Outdoor Ambient Temperature																							
			65ºF				75ºF				85ºF				95ºF				105ºF				115ºF			
			Entering Indoor Wet Bulb Temperature																							
IDB	Airflow		59	63	67	71	59	63	67	71	59	63	67	71	59	63	67	71	59	63	67	71	59	63	67	71
80	1400	MBh	48.7	49.4	50.8	53.0	48.3	49.0	50.4	52.6	47.0	47.7	49.1	51.3	44.9	45.6	**47.0**	49.2	42.3	42.9	44.4	46.6	39.9	40.5	42.0	44.2
		S/T	0.84	0.77	0.64	0.5	1.00	0.77	0.65	0.5	1.00	0.80	0.67	0.5	1.00	0.81	**0.69**	0.6	1.00	0.83	0.71	0.6	1.00	1.00	0.76	0.6
		ΔT	1	1	1	1	1	1	1	1	1	1	1	1	1	1	**1**	1	1	1	1	1	1	1	1	1
		kW	2.88	2.88	2.87	2.9	3.20	3.20	3.20	3.2	3.56	3.56	3.56	3.6	3.95	3.95	**3.95**	4.0	4.39	4.39	4.38	4.4	4.90	4.90	4.89	4.9
		Amps	9.9	9.9	9.8	9.9	11.3	11.3	11.2	11.3	12.8	12.8	12.8	12.9	14.5	14.5	**14.5**	14.6	16.4	16.4	16.4	16.5	18.7	18.6	18.6	18.7
	1600	MBh	49.6	50.3	51.7	53.9	49.2	49.8	51.3	53.5	47.9	48.6	50.0	52.2	45.8	46.4	47.9	50.1	43.1	43.8	45.2	47.4	40.7	41.4	42.9	45.0
		S/T	0.87	0.80	0.68	0.5	1.00	0.81	0.68	0.6	1.00	0.83	0.71	0.6	1.00	0.85	0.72	0.6	1.00	1.00	0.74	0.6	1.00	1.00	0.79	0.7
		ΔT	1	1	1	1	1	1	1	1	1	1	1	1	1	1	1	1	1	1	1	1	1	1	1	1
		kW	2.90	2.89	2.89	2.91	3.22	3.22	3.21	3.24	3.58	3.58	3.57	3.60	3.97	3.97	3.96	3.99	4.41	4.40	4.40	4.42	4.92	4.91	4.91	4.93
		Amps	9.9	9.9	9.9	10.0	11.3	11.3	11.3	11.4	12.9	12.9	12.9	13.0	14.6	14.6	14.6	14.7	16.5	16.5	16.5	16.6	18.7	18.7	18.7	18.8
	1800	MBh	50.7	51.3	52.8	55.0	50.2	50.9	52.3	54.5	49.0	49.7	51.1	53.3	46.8	47.5	49.0	51.1	44.2	44.9	46.3	48.5	41.8	42.5	43.9	46.1
		S/T	1.00	0.81	0.68	0.6	1.00	0.81	0.69	0.6	1.00	0.84	0.71	0.6	1.00	0.85	0.73	0.6	1.00	1.00	0.75	0.6	1.00	1.00	0.80	0.7
		ΔT	1	1	1	1	1	1	1	1	1	1	1	1	1	1	1	1	1	1	1	1	1	1	1	1
		kW	2.91	2.91	2.90	2.9	3.23	3.23	3.22	3.2	3.59	3.59	3.59	3.6	3.98	3.98	3.98	4.0	4.42	4.42	4.41	4.4	4.93	4.93	4.92	4.9
		Amps	10.0	10.0	10.0	10.1	11.4	11.4	11.4	11.5	13.0	13.0	12.9	13.0	14.7	14.7	14.6	14.7	16.6	16.6	16.5	16.6	18.8	18.8	18.8	18.9
85	1400	MBh	49.5	50.2	51.6	53.8	49.1	49.8	51.2	53.4	47.8	48.5	50.0	52.1	45.7	46.4	47.8	50.0	43.1	43.8	45.2	47.4	40.7	41.4	42.8	45.0
		S/T	1.00	0.86	0.74	0.6	1.00	0.87	0.74	0.6	1.00	0.89	0.76	0.6	1.00	1.00	0.78	0.7	1.00	1.00	0.80	0.7	1.00	1.00	0.85	0.7
		ΔT	1	1	1	1	1	1	1	1	1	1	1	1	1	1	1	1	1	1	1	1	1	1	1	1
		kW	2.89	2.88	2.88	2.9	3.21	3.21	3.20	3.2	3.57	3.57	3.56	3.6	3.96	3.96	3.95	4.0	4.40	4.39	4.39	4.4	4.91	4.90	4.90	4.9
		Amps	9.9	9.9	9.9	10.0	11.3	11.3	11.3	11.4	12.9	12.9	12.8	12.9	14.6	14.6	14.5	14.6	16.5	16.4	16.4	16.5	18.7	18.7	18.6	18.8
	1600	MBh	50.4	51.1	52.5	54.7	50.0	50.6	52.1	54.3	48.7	49.4	50.8	53.0	46.6	47.3	48.7	50.9	44.0	44.6	46.1	48.2	41.6	42.2	43.7	45.8
		S/T	1.00	0.89	0.77	0.6	1.00	0.90	0.78	0.6	1.00	1.00	0.80	0.7	1.00	1.00	0.82	0.7	1.00	1.00	0.84	0.7	1.00	1.00	0.88	0.8
		ΔT	1	1	1	1	1	1	1	1	1	1	1	1	1	1	1	1	1	1	1	1	1	1	1	1
		kW	2.90	2.90	2.89	2.92	3.23	3.22	3.22	3.24	3.59	3.58	3.58	3.60	3.98	3.97	3.97	3.99	4.41	4.41	4.40	4.43	4.92	4.92	4.92	4.94
		Amps	10.0	10.0	9.9	10.0	11.4	11.4	11.3	11.4	12.9	12.9	12.9	13.0	14.6	14.6	14.6	14.7	16.5	16.5	16.5	16.6	18.8	18.7	18.7	18.8
	1800	MBh	51.5	52.2	53.6	55.8	51.0	51.7	53.2	55.3	49.8	50.5	51.9	54.1	47.7	48.3	49.8	51.9	45.0	45.7	47.1	49.3	42.6	43.3	44.7	46.9
		S/T	1.00	0.90	0.78	0.6	1.00	0.91	0.78	0.7	1.00	1.00	0.81	0.7	1.00	1.00	0.82	0.7	1.00	1.00	0.84	0.7	1.00	1.00	1.00	0.8
		ΔT	1	1	1	1	1	1	1	1	1	1	1	1	1	1	1	1	1	1	1	1	1	1	1	1
		kW	2.92	2.91	2.91	2.9	3.24	3.24	3.23	3.3	3.60	3.60	3.59	3.6	3.99	3.99	3.98	4.0	4.43	4.42	4.42	4.4	4.94	4.93	4.93	5.0
		Amps	10.0	10.0	10.0	10.1	11.4	11.4	11.4	11.5	13.0	13.0	13.0	13.1	14.7	14.7	14.7	14.8	16.6	16.6	16.6	16.7	18.8	18.8	18.8	18.9

IDB = Entering Indoor Dry Bulb Temperature

High and low pressures are measured at the liquid and suction service valves.

Shaded area is ACCA (TVA) conditions

kW = Total system power

Amps = outdoor unit amps (comp.+fan)

			Outdoor Ambient Temperature																							
			65ºF				75ºF				85ºF				95ºF				105ºF				115ºF			
			Entering Indoor Wet Bulb Temperature																							
IDB	Airflow		59	63	67	71	59	63	67	71	59	63	67	71	59	63	67	71	59	63	67	71	59	63	67	71
70	980	MBh	34.4	34.9	35.9	-	34.1	34.6	35.6	-	33.2	33.7	34.7	-	31.6	32.1	33.1	-	29.7	30.2	31.3	-	28.0	28.5	29.5	-
		S/T	0.57	0.49	0.37	-	0.57	0.50	0.37	-	0.59	0.52	0.40	-	0.61	0.54	0.42	-	1.00	0.56	0.44	-	1.00	0.61	0.48	-
		ΔT	1	1	0	-	1	1	0	-	1	1	0	-	1	1	0	-	1	1	0	-	1	1	0	-
		kW	1.80	1.80	1.80	-	2.00	2.00	2.00	-	2.23	2.23	2.23	-	2.48	2.48	2.47	-	2.75	2.75	2.75	-	3.07	3.07	3.07	-
		Amps	6.2	6.2	6.1	-	7.0	7.0	7.0	-	8.0	8.0	8.0	-	9.1	9.1	9.1	-	10.3	10.3	10.3	-	11.7	11.7	11.7	-
	1120	MBh	34.8	35.3	36.3	-	34.5	35.0	36.0	-	33.6	34.1	35.1	-	32.1	32.6	33.6	-	30.2	30.7	31.7	-	28.5	29.0	30.0	-
		S/T	0.62	0.55	0.42	-	0.63	0.56	0.43	-	0.65	0.58	0.45	-	0.67	0.60	0.47	-	1.00	0.62	0.49	-	1.00	0.67	0.54	-
		ΔT	1	1	0	-	1	1	0	-	1	1	0	-	1	1	0	-	1	1	0	-	1	1	0	-
		kW	1.81	1.81	1.81	-	2.02	2.01	2.01	-	2.24	2.24	2.24	-	2.49	2.49	2.48	-	2.76	2.76	2.76	-	3.08	3.08	3.08	-
		Amps	6.2	6.2	6.2	-	7.1	7.1	7.1	-	8.1	8.1	8.1	-	9.1	9.1	9.1	-	10.3	10.3	10.3	-	11.7	11.7	11.7	-
	1260	MBh	35.4	35.9	36.9	-	35.1	35.6	36.6	-	34.2	34.7	35.7	-	32.6	33.1	34.1	-	30.7	31.2	32.2	-	29.0	29.5	30.5	-
		S/T	0.65	0.58	0.46	-	0.66	0.59	0.46	-	0.68	0.61	0.48	-	0.70	0.63	0.50	-	1.00	0.65	0.52	-	1.00	0.70	0.57	-
		ΔT	1	1	0	-	1	1	0	-	1	1	0	-	1	1	0	-	1	0	0	-	1	1	0	-
		kW	1.82	1.82	1.82	-	2.02	2.02	2.02	-	2.25	2.25	2.25	-	2.50	2.49	2.49	-	2.77	2.77	2.77	-	3.09	3.09	3.09	-
		Amps	6.2	6.2	6.2	-	7.1	7.1	7.1	-	8.1	8.1	8.1	-	9.2	9.2	9.2	-	10.4	10.4	10.4	-	11.8	11.8	11.8	-
75	1400	MBh	34.4	34.9	35.9	37.5	34.1	34.6	35.6	37.2	33.2	33.7	34.7	36.3	31.7	32.1	33.2	34.7	29.8	30.2	31.3	32.8	28.0	28.5	29.6	31.1
		S/T	0.69	0.61	0.49	0.4	0.69	0.62	0.49	0.4	0.72	0.64	0.52	0.4	1.00	0.66	0.54	0.4	1.00	0.68	0.56	0.4	1.00	0.73	0.60	0.5
		ΔT	1	1	1	0	1	1	1	0	1	1	1	0	1	1	1	0	1	1	1	0	1	1	1	1
		kW	1.80	1.80	1.80	1.8	2.00	2.00	2.00	2.0	2.23	2.23	2.22	2.2	2.48	2.47	2.47	2.5	2.75	2.75	2.74	2.8	3.07	3.07	3.07	3.1
		Amps	6.2	6.2	6.1	6.2	7.0	7.0	7.0	7.1	8.0	8.0	8.0	8.1	9.1	9.1	9.1	9.1	10.3	10.3	10.3	10.3	11.7	11.7	11.7	11.7
	1600	MBh	34.9	35.3	36.4	37.9	34.5	35.0	36.1	37.6	33.6	34.1	35.2	36.7	32.1	32.6	33.6	35.2	30.2	30.7	31.7	33.3	28.5	29.0	30.0	31.6
		S/T	0.74	0.67	0.54	0.4	0.75	0.68	0.55	0.4	1.00	0.70	0.57	0.4	1.00	0.72	0.59	0.5	1.00	0.74	0.61	0.5	1.00	0.79	0.66	0.5
		ΔT	1	1	1	0	1	1	1	0	1	1	1	0	1	1	1	0	1	1	1	0	1	1	1	0
		kW	1.81	1.81	1.81	1.82	2.01	2.01	2.01	2.02	2.24	2.24	2.24	2.25	2.49	2.48	2.48	2.50	2.76	2.76	2.76	2.77	3.08	3.08	3.08	3.09
		Amps	6.2	6.2	6.2	6.2	7.1	7.1	7.1	7.1	8.1	8.1	8.1	8.1	9.1	9.1	9.1	9.2	10.3	10.3	10.3	10.4	11.7	11.7	11.7	11.8
	1800	MBh	35.4	35.9	36.9	38.5	35.1	35.6	36.6	38.2	34.2	34.7	35.7	37.3	32.6	33.1	34.2	35.7	30.8	31.2	32.3	33.8	29.0	29.5	30.5	32.1
		S/T	0.77	0.70	0.58	0.4	0.78	0.71	0.58	0.4	1.00	0.73	0.61	0.5	1.00	0.75	0.62	0.5	1.00	0.77	0.64	0.5	1.00	1.00	0.69	0.6
		ΔT	1	1	1	0	1	1	1	0	1	1	1	0	1	1	1	0	1	1	1	0	1	1	1	0
		kW	1.82	1.82	1.81	1.8	2.02	2.02	2.02	2.0	2.25	2.25	2.24	2.3	2.49	2.49	2.49	2.5	2.77	2.77	2.76	2.8	3.09	3.09	3.09	3.1
		Amps	6.2	6.2	6.2	6.3	7.1	7.1	7.1	7.2	8.1	8.1	8.1	8.2	9.2	9.2	9.2	9.2	10.4	10.4	10.3	10.4	11.8	11.8	11.7	11.8

IDB = Entering Indoor Dry Bulb Temperature
High and low pressures are measured at the liquid and suction service valves.

Shaded area is ACCA (TVA) conditions

kW = Total system power
Amps = outdoor unit amps (comp.+fan)

Expanded Cooling Data — GGLXT7CA4810**/CA*TA6030*3A*+EEP - LOW STAGE (cont.)

			Outdoor Ambient Temperature																							
			65ºF				75ºF				85ºF				95ºF				105ºF				115ºF			
			Entering Indoor Wet Bulb Temperature																							
IDB	Airflow		59	63	67	71	59	63	67	71	59	63	67	71	59	63	67	71	59	63	67	71	59	63	67	71
80	980	MBh	34.6	35.1	36.1	37.7	34.3	34.8	35.8	37.4	33.4	33.9	34.9	36.5	31.8	32.3	33.3	34.9	29.9	30.4	31.5	33.0	28.2	28.7	29.7	31.3
		S/T	0.80	0.73	0.61	0.5	1.00	0.74	0.61	0.5	1.00	0.76	0.63	0.5	1.00	0.78	0.65	0.5	1.00	1.00	0.67	0.5	1.00	1.00	0.72	0.6
		ΔT	1	1	1	1	1	1	1	1	1	1	1	1	1	1	1	1	1	1	1	1	1	1	1	1
		kW	1.80	1.80	1.80	1.8	2.00	2.00	2.00	2.0	2.23	2.23	2.23	2.2	2.48	2.47	2.47	2.5	2.75	2.75	2.75	2.8	3.07	3.07	3.07	3.1
		Amps	6.2	6.2	6.1	6.2	7.0	7.0	7.0	7.1	8.0	8.0	8.0	8.1	9.1	9.1	9.1	9.1	10.3	10.3	10.3	10.3	11.7	11.7	11.7	11.7
	1120	MBh	35.0	35.5	36.5	38.1	34.7	35.2	36.2	37.8	33.8	34.3	35.3	36.9	32.3	32.8	**33.8**	35.4	30.4	30.9	31.9	33.5	28.7	29.2	30.2	31.8
		S/T	0.86	0.79	0.66	0.5	1.00	0.79	0.67	0.5	1.00	0.82	0.69	0.6	1.00	0.84	**0.71**	0.6	1.00	1.00	0.73	0.6	1.00	1.00	0.78	0.6
		ΔT	1	1	1	1	1	1	1	1	1	1	1	1	1	1	**1**	1	1	1	1	1	1	1	1	1
		kW	1.81	1.81	1.81	1.82	2.01	2.01	2.01	2.03	2.24	2.24	2.24	2.25	2.49	2.49	**2.48**	2.50	2.76	2.76	2.76	2.77	3.08	3.08	3.08	3.09
		Amps	6.2	6.2	6.2	6.3	7.1	7.1	7.1	7.1	8.1	8.1	8.1	8.1	9.1	9.1	**9.1**	9.2	10.3	10.3	10.3	10.4	11.7	11.7	11.7	11.8
	1260	MBh	35.6	36.1	37.1	38.7	35.3	35.8	36.8	38.3	34.4	34.9	35.9	37.4	32.8	33.3	34.3	35.9	30.9	31.4	32.4	34.0	29.2	29.7	30.7	32.3
		S/T	1.00	0.82	0.69	0.6	1.00	0.83	0.70	0.6	1.00	0.85	0.72	0.6	1.00	0.87	0.74	0.6	1.00	1.00	0.76	0.6	1.00	1.00	0.81	0.7
		ΔT	1	1	1	1	1	1	1	1	1	1	1	1	1	1	1	1	1	1	1	1	1	1	1	1
		kW	1.82	1.82	1.82	1.8	2.02	2.02	2.02	2.0	2.25	2.25	2.25	2.3	2.50	2.49	2.49	2.5	2.77	2.77	2.76	2.8	3.09	3.09	3.09	3.1
		Amps	6.2	6.2	6.2	6.3	7.1	7.1	7.1	7.2	8.1	8.1	8.1	8.2	9.2	9.2	9.2	9.2	10.4	10.4	10.4	10.4	11.8	11.8	11.8	11.8
85	980	MBh	35.2	35.6	36.7	38.2	34.9	35.3	36.4	37.9	34.0	34.4	35.5	37.0	32.4	32.9	33.9	35.5	30.5	31.0	32.0	33.6	28.8	29.3	30.3	31.9
		S/T	1.00	0.83	0.70	0.6	1.00	0.83	0.71	0.6	1.00	1.00	0.73	0.6	1.00	1.00	0.75	0.6	1.00	1.00	0.77	0.6	1.00	1.00	0.82	0.7
		ΔT	1	1	1	1	1	1	1	1	1	1	1	1	1	1	1	1	1	1	1	1	1	1	1	1
		kW	1.81	1.80	1.80	1.8	2.01	2.01	2.00	2.0	2.23	2.23	2.23	2.2	2.48	2.48	2.48	2.5	2.75	2.75	2.75	2.8	3.08	3.07	3.07	3.1
		Amps	6.2	6.2	6.2	6.2	7.1	7.1	7.0	7.1	8.0	8.0	8.0	8.1	9.1	9.1	9.1	9.2	10.3	10.3	10.3	10.4	11.7	11.7	11.7	11.8
	1120	MBh	35.6	36.1	37.1	38.7	35.3	35.8	36.8	38.4	34.4	34.9	35.9	37.5	32.9	33.3	34.4	35.9	31.0	31.5	32.5	34.1	29.2	29.7	30.8	32.3
		S/T	1.00	0.88	0.76	0.6	1.00	0.89	0.76	0.6	1.00	1.00	0.79	0.7	1.00	1.00	0.80	0.7	1.00	1.00	0.82	0.7	1.00	1.00	1.00	0.7
		ΔT	1	1	1	1	1	1	1	1	1	1	1	1	1	1	1	1	1	1	1	1	1	1	1	1
		kW	1.82	1.81	1.81	1.83	2.02	2.02	2.01	2.03	2.25	2.24	2.24	2.26	2.49	2.49	2.49	2.50	2.77	2.76	2.76	2.78	3.09	3.09	3.08	3.10
		Amps	6.2	6.2	6.2	6.3	7.1	7.1	7.1	7.2	8.1	8.1	8.1	8.1	9.2	9.2	9.1	9.2	10.4	10.3	10.3	10.4	11.8	11.7	11.7	11.8
	1260	MBh	36.2	36.6	37.7	39.2	35.8	36.3	37.4	38.9	34.9	35.4	36.5	38.0	33.4	33.9	34.9	36.5	31.5	32.0	33.0	34.6	29.8	30.3	31.3	32.9
		S/T	1.00	0.91	0.79	0.7	1.00	0.92	0.79	0.7	1.00	1.00	0.82	0.7	1.00	1.00	0.84	0.7	1.00	1.00	0.86	0.7	1.00	1.00	1.00	0.8
		ΔT	1	1	1	1	1	1	1	1	1	1	1	1	1	1	1	1	1	1	1	1	1	1	1	1
		kW	1.82	1.82	1.82	1.8	2.03	2.03	2.02	2.0	2.25	2.25	2.25	2.3	2.50	2.50	2.49	2.5	2.77	2.77	2.77	2.8	3.10	3.09	3.09	3.1
		Amps	6.3	6.3	6.2	6.3	7.1	7.1	7.1	7.2	8.1	8.1	8.1	8.2	9.2	9.2	9.2	9.2	10.4	10.4	10.4	10.4	11.8	11.8	11.8	11.8

IDB = Entering Indoor Dry Bulb Temperature
High and low pressures are measured at the liquid and suction service valves.

Shaded area is ACCA (TVA) conditions

kW = Total system power
Amps = outdoor unit amps (comp.+fan)

Expanded Cooling Data – GLXT7CA6010**/CA*TA6030*3A*+EEP - HIGH STAGE

			Outdoor Ambient Temperature																							
			65ºF				75ºF				85ºF				95ºF				105ºF				115ºF			
			Entering Indoor Wet Bulb Temperature																							
IDB	Airflow		59	63	67	71	59	63	67	71	59	63	67	71	59	63	67	71	59	63	67	71	59	63	67	71
70	1485	MBh	58.8	59.6	61.3	-	58.2	59.1	60.8	-	56.7	57.5	59.3	-	54.1	54.9	56.7	-	50.9	51.7	53.5	-	48.0	48.8	50.6	-
		S/T	0.59	0.52	0.40	-	0.59	0.53	0.41	-	0.62	0.55	0.43	-	0.63	0.57	0.45	-	0.65	0.58	0.47	-	1.00	0.63	0.51	-
		ΔT	22	20	16	-	22	20	16	-	23	20	16	-	22	20	16	-	22	20	16	-	23	21	17	-
		kW	3.52	3.52	3.51	-	3.94	3.94	3.93	-	4.41	4.41	4.40	-	4.92	4.92	4.91	-	5.49	5.48	5.48	-	6.15	6.15	6.14	-
		Amps	12.5	12.4	12.4	-	14.3	14.3	14.2	-	16.3	16.3	16.3	-	18.5	18.5	18.5	-	21.0	21.0	20.9	-	23.9	23.9	23.8	-
	2000	MBh	61.8	62.6	64.3	-	61.2	62.1	63.8	-	59.7	60.5	62.3	-	57.1	57.9	59.7	-	53.9	54.8	56.5	-	51.0	51.9	53.6	-
		S/T	0.62	0.56	0.44	-	0.63	0.56	0.44	-	0.65	0.58	0.46	-	0.67	0.60	0.48	-	1.00	0.62	0.50	-	1.00	0.67	0.55	-
		ΔT	20	17	13	-	19	17	13	-	20	18	14	-	19	17	13	-	19	17	13	-	21	18	14	-
		kW	3.57	3.57	3.56	-	3.99	3.99	3.98	-	4.46	4.46	4.45	-	4.97	4.96	4.96	-	5.53	5.53	5.52	-	6.20	6.19	6.19	-
		Amps	12.7	12.6	12.6	-	14.5	14.5	14.4	-	16.5	16.5	16.5	-	18.7	18.7	18.7	-	21.2	21.2	21.1	-	24.1	24.1	24.0	-
	2250	MBh	63.8	64.7	66.4	-	63.3	64.1	65.9	-	61.8	62.6	64.4	-	59.2	60.0	61.7	-	56.0	56.8	58.6	-	53.1	53.9	55.7	-
		S/T	0.59	0.52	0.40	-	0.59	0.53	0.41	-	0.62	0.55	0.43	-	1.00	0.57	0.45	-	1.00	0.59	0.47	-	1.00	0.63	0.51	-
		ΔT	18	16	12	-	18	16	12	-	19	16	12	-	18	16	12	-	18	16	12	-	19	17	13	-
		kW	3.59	3.59	3.58	-	4.01	4.01	4.00	-	4.48	4.48	4.47	-	4.99	4.98	4.98	-	5.55	5.55	5.54	-	6.22	6.21	6.21	-
		Amps	12.7	12.7	12.7	-	14.6	14.5	14.5	-	16.6	16.6	16.6	-	18.8	18.8	18.8	-	21.3	21.3	21.2	-	24.2	24.1	24.1	-
75	1485	MBh	58.8	59.6	61.3	64.0	58.3	59.1	60.8	63.5	56.8	57.6	59.3	62.0	54.1	55.0	56.7	59.3	51.0	51.8	53.5	56.2	48.1	48.9	50.6	53.3
		S/T	0.70	0.63	0.51	0.4	0.71	0.64	0.52	0.4	0.73	0.66	0.54	0.4	1.00	0.68	0.56	0.4	1.00	0.70	0.58	0.5	1.00	0.74	0.62	0.5
		ΔT	27	25	21	17	27	25	21	17	27	25	21	17	27	25	21	17	27	25	21	16	28	26	22	18
		kW	3.52	3.52	3.51	3.5	3.94	3.94	3.93	4.0	4.41	4.41	4.40	4.4	4.92	4.91	4.91	4.9	5.48	5.48	5.47	5.5	6.15	6.15	6.14	6.2
		Amps	12.4	12.4	12.4	12.5	14.3	14.3	14.2	14.4	16.3	16.3	16.3	16.4	18.5	18.5	18.5	18.6	21.0	21.0	20.9	21.1	23.9	23.8	23.8	24.0
	2000	MBh	61.8	62.6	64.3	67.0	61.3	62.1	63.8	66.5	59.8	60.6	62.3	65.0	57.2	58.0	59.7	62.4	54.0	54.8	56.5	59.2	51.1	51.9	53.6	56.3
		S/T	0.74	0.67	0.55	0.4	0.74	0.67	0.56	0.4	1.00	0.70	0.58	0.5	1.00	0.71	0.59	0.5	1.00	0.73	0.61	0.5	1.00	0.78	0.66	0.5
		ΔT	24	22	18	14	24	22	18	14	25	22	18	14	24	22	18	14	24	22	18	13	25	23	19	15
		kW	3.57	3.56	3.56	3.59	3.99	3.98	3.98	4.01	4.46	4.45	4.45	4.48	4.96	4.96	4.95	4.99	5.53	5.53	5.52	5.55	6.20	6.19	6.19	6.22
		Amps	12.6	12.6	12.6	12.7	14.5	14.5	14.4	14.6	16.5	16.5	16.5	16.6	18.7	18.7	18.7	18.8	21.2	21.2	21.1	21.3	24.1	24.0	24.0	24.2
	2250	MBh	63.9	64.7	66.4	69.1	63.3	64.2	65.9	68.5	61.8	62.7	64.4	67.0	59.2	60.0	61.8	64.4	56.0	56.9	58.6	61.2	53.1	54.0	55.7	58.3
		S/T	0.70	0.64	0.52	0.4	0.71	0.64	0.52	0.4	1.00	0.66	0.54	0.4	1.00	0.68	0.56	0.4	1.00	0.70	0.58	0.5	1.00	1.00	0.63	0.5
		ΔT	23	21	17	13	23	21	17	13	23	21	17	13	23	21	17	13	23	21	17	12	24	22	18	14
		kW	3.59	3.58	3.58	3.6	4.01	4.00	4.00	4.0	4.48	4.47	4.47	4.5	4.98	4.98	4.97	5.0	5.55	5.55	5.54	5.6	6.21	6.21	6.20	6.2
		Amps	12.7	12.7	12.7	12.8	14.5	14.5	14.5	14.6	16.6	16.6	16.5	16.7	18.8	18.8	18.7	18.9	21.3	21.2	21.2	21.4	24.1	24.1	24.1	24.2

IDB = Entering Indoor Dry Bulb Temperature
High and low pressures are measured at the liquid and suction service valves.

Shaded area is ACCA (TVA) conditions

kW = Total system power
Amps = outdoor unit amps (comp.+fan)

Expanded Cooling Data – GLXT7CA6010**/CA*TA6030*3A*+EEP - HIGH STAGE (cont.)

			Outdoor Ambient Temperature																							
			65ºF				75ºF				85ºF				95ºF				105ºF				115ºF			
			Entering Indoor Wet Bulb Temperature																							
IDB	Airflow		59	63	67	71	59	63	67	71	59	63	67	71	59	63	67	71	59	63	67	71	59	63	67	71
80	1485	MBh	59.1	59.9	61.6	64.3	58.6	59.4	61.1	63.8	57.1	57.9	59.6	62.3	54.4	55.3	**57.0**	59.6	51.3	52.1	53.8	56.5	48.4	49.2	50.9	53.6
		S/T	0.81	0.75	0.63	0.5	1.00	0.75	0.63	0.5	1.00	0.77	0.65	0.5	1.00	0.79	**0.67**	0.5	1.00	0.81	0.69	0.6	1.00	1.00	0.74	0.6
		ΔT	32	30	26	21	32	30	26	21	32	30	26	22	32	30	**26**	21	32	29	25	21	33	31	27	22
		kW	3.52	3.52	3.51	3.5	3.94	3.94	3.93	4.0	4.41	4.41	4.40	4.4	4.92	4.92	**4.91**	4.9	5.49	5.48	5.48	5.5	6.15	6.15	6.14	6.2
		Amps	12.4	12.4	12.4	12.5	14.3	14.3	14.2	14.4	16.3	16.3	16.3	16.4	18.5	18.5	**18.5**	18.6	21.0	21.0	20.9	21.1	23.9	23.9	23.8	24.0
	2000	MBh	62.1	62.9	64.6	67.3	61.6	62.4	64.1	66.8	60.1	60.9	62.6	65.3	57.5	58.3	60.0	62.7	54.3	55.1	56.8	59.5	51.4	52.2	53.9	56.6
		S/T	0.85	0.78	0.66	0.5	1.00	0.79	0.67	0.5	1.00	0.81	0.69	0.6	1.00	0.82	0.71	0.6	1.00	1.00	0.72	0.6	1.00	1.00	0.77	0.6
		ΔT	29	27	23	19	29	27	23	19	29	27	23	19	29	27	23	19	29	27	23	18	30	28	24	20
		kW	3.57	3.57	3.56	3.59	3.99	3.99	3.98	4.01	4.46	4.46	4.45	4.48	4.97	4.96	4.96	4.99	5.53	5.53	5.52	5.55	6.20	6.19	6.19	6.22
		Amps	12.6	12.6	12.6	12.7	14.5	14.5	14.4	14.6	16.5	16.5	16.5	16.6	18.7	18.7	18.7	18.8	21.2	21.2	21.1	21.3	24.1	24.1	24.0	24.2
	2250	MBh	64.2	65.0	66.7	69.4	63.6	64.5	66.2	68.8	62.1	63.0	64.7	67.3	59.5	60.3	62.1	64.7	56.3	57.2	58.9	61.5	53.4	54.3	56.0	58.6
		S/T	1.00	0.75	0.63	0.5	1.00	0.75	0.63	0.5	1.00	0.77	0.65	0.5	1.00	0.79	0.67	0.5	1.00	1.00	0.69	0.6	1.00	1.00	0.74	0.6
		ΔT	28	26	22	17	28	26	22	17	28	26	22	18	28	26	22	17	28	25	21	17	29	27	23	18
		kW	3.59	3.59	3.58	3.6	4.01	4.01	4.00	4.0	4.48	4.47	4.47	4.5	4.99	4.98	4.97	5.0	5.55	5.55	5.54	5.6	6.22	6.21	6.21	6.2
		Amps	12.7	12.7	12.7	12.8	14.6	14.5	14.5	14.7	16.6	16.6	16.6	16.7	18.8	18.8	18.8	18.9	21.3	21.3	21.2	21.4	24.2	24.1	24.1	24.3
85	1485	MBh	60.1	60.9	62.6	65.3	59.5	60.4	62.1	64.7	58.0	58.8	60.6	63.2	55.4	56.2	58.0	60.6	52.2	53.1	54.8	57.4	49.3	50.2	51.9	54.5
		S/T	1.00	0.83	0.71	0.6	1.00	0.84	0.72	0.6	1.00	0.86	0.74	0.6	1.00	1.00	0.76	0.6	1.00	1.00	0.78	0.7	1.00	1.00	0.82	0.7
		ΔT	36	34	30	26	36	34	30	26	37	34	30	26	36	34	30	26	36	34	30	25	37	35	31	27
		kW	3.53	3.53	3.52	3.6	3.95	3.95	3.94	4.0	4.42	4.42	4.41	4.4	4.93	4.92	4.92	4.9	5.49	5.49	5.48	5.5	6.16	6.16	6.15	6.2
		Amps	12.5	12.5	12.4	12.6	14.3	14.3	14.3	14.4	16.3	16.3	16.3	16.4	18.6	18.5	18.5	18.6	21.0	21.0	21.0	21.1	23.9	23.9	23.9	24.0
	2000	MBh	63.1	63.9	65.6	68.3	62.6	63.4	65.1	67.8	61.0	61.9	63.6	66.2	58.4	59.3	61.0	63.6	55.3	56.1	57.8	60.4	52.3	53.2	54.9	57.5
		S/T	1.00	0.87	0.75	0.6	1.00	0.87	0.76	0.6	1.00	1.00	0.78	0.7	1.00	1.00	0.79	0.7	1.00	1.00	0.81	0.7	1.00	1.00	0.86	0.7
		ΔT	33	31	27	23	33	31	27	23	34	32	27	23	33	31	27	23	33	31	27	23	34	32	28	24
		kW	3.58	3.58	3.57	3.60	4.00	3.99	3.99	4.02	4.47	4.46	4.46	4.49	4.97	4.97	4.96	5.00	5.54	5.54	5.53	5.56	6.21	6.20	6.20	6.23
		Amps	12.7	12.7	12.6	12.8	14.5	14.5	14.5	14.6	16.5	16.5	16.5	16.6	18.8	18.7	18.7	18.8	21.2	21.2	21.2	21.3	24.1	24.1	24.1	24.2
	2250	MBh	65.1	66.0	67.7	70.3	64.6	65.4	67.2	69.8	63.1	63.9	65.7	68.3	60.5	61.3	63.1	65.7	57.3	58.1	59.9	62.5	54.4	55.2	57.0	59.6
		S/T	1.00	0.84	0.72	0.6	1.00	1.00	0.72	0.6	1.00	1.00	0.74	0.6	1.00	1.00	0.76	0.6	1.00	1.00	0.78	0.7	1.00	1.00	1.00	0.7
		ΔT	32	30	26	22	32	30	26	22	33	30	26	22	32	30	26	22	32	30	26	21	33	31	27	23
		kW	3.60	3.59	3.59	3.6	4.02	4.01	4.01	4.0	4.49	4.48	4.48	4.5	4.99	4.99	4.98	5.0	5.56	5.56	5.55	5.6	6.23	6.22	6.21	6.2
		Amps	12.8	12.8	12.7	12.9	14.6	14.6	14.5	14.7	16.6	16.6	16.6	16.7	18.8	18.8	18.8	18.9	21.3	21.3	21.3	21.4	24.2	24.2	24.1	24.3

IDB = Entering Indoor Dry Bulb Temperature
High and low pressures are measured at the liquid and suction service valves.

Shaded area is ACCA (TVA) conditions

kW = Total system power
Amps = outdoor unit amps (comp.+fan)

Expanded Cooling Data – GLXT7CA6010**/CA*TA6030*3A*+EEP - LOW STAGE

			Outdoor Ambient Temperature																							
			65ºF				75ºF				85ºF				95ºF				105ºF				115ºF			
			Entering Indoor Wet Bulb Temperature																							
IDB	Airflow		59	63	67	71	59	63	67	71	59	63	67	71	59	63	67	71	59	63	67	71	59	63	67	71
70	1040	MBh	41.2	41.8	43.0	-	40.8	41.4	42.7	-	39.7	40.3	41.6	-	37.9	38.5	39.7	-	35.6	36.2	37.4	-	33.5	34.1	35.3	-
		S/T	0.46	0.39	0.27	-	0.46	0.40	0.27	-	0.49	0.42	0.30	-	0.50	0.44	0.31	-	0.52	0.46	0.33	-	1.00	0.50	0.38	-
		ΔT	24.56	22.45	18.50	-	24.50	22.39	18.44	-	24.80	22.68	18.74	-	24.48	22.37	18.42	-	24.20	22.08	18.14	-	25.52	23.41	19.46	-
		kW	2.18	2.18	2.18	-	2.45	2.45	2.44	-	2.74	2.74	2.74	-	3.06	3.06	3.06	-	3.42	3.42	3.41	-	3.84	3.84	3.83	-
		Amps	7.7	7.7	7.7	-	8.8	8.8	8.8	-	10.1	10.1	10.1	-	11.5	11.5	11.5	-	13.1	13.1	13.0	-	14.9	14.9	14.8	-
	1400	MBh	42.2	42.8	44.1	-	41.9	42.5	43.7	-	40.8	41.4	42.6	-	38.9	39.5	40.7	-	36.6	37.2	38.5	-	34.5	35.1	36.4	-
		S/T	0.60	0.53	0.41	-	0.61	0.54	0.42	-	0.63	0.56	0.44	-	0.65	0.58	0.46	-	0.67	0.60	0.48	-	1.00	0.65	0.52	-
		ΔT	21.56	19.45	15.51	-	21.51	19.39	15.45	-	21.80	19.69	15.75	-	21.48	19.37	15.43	-	21.20	19.09	15.15	-	22.52	20.41	16.47	-
		kW	2.22	2.22	2.21	-	2.48	2.48	2.47	-	2.78	2.77	2.77	-	3.10	3.09	3.09	-	3.45	3.45	3.44	-	3.87	3.87	3.86	-
		Amps	7.8	7.8	7.8	-	9.0	9.0	9.0	-	10.3	10.3	10.2	-	11.6	11.6	11.6	-	13.2	13.2	13.2	-	15.0	15.0	15.0	-
	1575	MBh	42.9	43.5	44.7	-	42.5	43.1	44.4	-	41.4	42.0	43.3	-	39.6	40.2	41.4	-	37.3	37.9	39.1	-	35.2	35.8	37.0	-
		S/T	0.63	0.57	0.44	-	0.64	0.57	0.45	-	0.66	0.59	0.47	-	0.68	0.61	0.49	-	1.00	0.63	0.51	-	1.00	0.68	0.56	-
		ΔT	20.49	18.38	14.43	-	20.43	18.32	14.37	-	20.73	18.62	14.67	-	20.41	18.30	14.35	-	20.13	18.01	14.07	-	21.45	19.34	15.39	-
		kW	2.23	2.23	2.22	-	2.49	2.49	2.49	-	2.79	2.79	2.78	-	3.11	3.10	3.10	-	3.46	3.46	3.46	-	3.88	3.88	3.87	-
		Amps	7.9	7.9	7.9	-	9.0	9.0	9.0	-	10.3	10.3	10.3	-	11.7	11.7	11.7	-	13.2	13.2	13.2	-	15.1	15.1	15.0	-
75	1040	MBh	41.2	41.8	43.1	45.0	40.9	41.4	42.7	44.6	39.8	40.4	41.6	43.5	37.9	38.5	39.7	41.6	35.6	36.2	37.4	39.3	33.5	34.1	35.4	37.3
		S/T	0.58	0.51	0.38	0.25	0.58	0.51	0.39	0.26	0.60	0.54	0.41	0.28	1.00	0.55	0.43	0.30	1.00	0.57	0.45	0.32	1.00	0.62	0.50	0.37
		ΔT	29.20	27.09	23.15	19.06	29.14	27.03	23.09	19.00	29.44	27.33	23.38	19.30	29.12	27.01	23.07	18.98	28.84	26.73	22.78	18.70	30.16	28.05	24.11	20.02
		kW	2.18	2.18	2.18	2.20	2.45	2.45	2.44	2.46	2.74	2.74	2.74	2.76	3.06	3.06	3.05	3.07	3.42	3.42	3.41	3.43	3.84	3.83	3.83	3.85
		Amps	7.7	7.7	7.7	7.7	8.8	8.8	8.8	8.9	10.1	10.1	10.1	10.2	11.5	11.5	11.5	11.6	13.1	13.0	13.0	13.1	14.9	14.9	14.8	14.9
	1400	MBh	42.3	42.9	44.1	46.0	41.9	42.5	43.7	45.6	40.8	41.4	42.6	44.5	38.9	39.5	40.8	42.7	36.6	37.2	38.5	40.4	34.6	35.1	36.4	38.3
		S/T	0.72	0.65	0.53	0.40	0.73	0.66	0.53	0.40	0.75	0.68	0.56	0.43	1.00	0.70	0.57	0.45	1.00	0.72	0.59	0.47	1.00	0.76	0.64	0.51
		ΔT	26.21	24.09	20.15	16.07	26.15	24.04	20.09	16.01	26.45	24.33	20.39	16.30	26.13	24.02	20.07	15.99	25.85	23.73	19.79	15.70	27.17	25.06	21.11	17.03
		kW	2.22	2.21	2.21	2.23	2.48	2.48	2.47	2.49	2.77	2.77	2.77	2.79	3.09	3.09	3.09	3.11	3.45	3.45	3.44	3.46	3.87	3.87	3.86	3.88
		Amps	7.8	7.8	7.8	7.9	9.0	9.0	8.9	9.0	10.3	10.2	10.2	10.3	11.6	11.6	11.6	11.7	13.2	13.2	13.2	13.3	15.0	15.0	15.0	15.1
	1040	MBh	42.9	43.5	44.8	46.7	42.6	43.1	44.4	46.3	41.5	42.1	43.3	45.2	39.6	40.2	41.4	43.3	37.3	37.9	39.1	41.0	35.2	35.8	37.0	38.9
		S/T	0.75	0.68	0.56	0.43	0.76	0.69	0.57	0.44	1.00	0.71	0.59	0.46	1.00	0.73	0.61	0.48	1.00	0.75	0.63	0.50	1.00	0.79	0.67	0.54
		ΔT	25.13	23.02	19.08	14.99	25.07	22.96	19.02	14.93	25.37	23.26	19.32	15.23	25.05	22.94	19.00	14.91	24.77	22.66	18.72	14.63	26.09	23.98	20.04	15.95
		kW	2.23	2.22	2.22	2.24	2.49	2.49	2.48	2.50	2.79	2.78	2.78	2.80	3.10	3.10	3.10	3.12	3.46	3.46	3.45	3.47	3.88	3.88	3.87	3.89
		Amps	7.87	7.87	7.85	7.93	9.02	9.01	8.99	9.08	10.30	10.30	10.28	10.36	11.69	11.68	11.66	11.75	13.24	13.23	13.21	13.30	15.06	15.05	15.03	15.12

IDB = Entering Indoor Dry Bulb Temperature
High and low pressures are measured at the liquid and suction service valves.

Shaded area is ACCA (TVA) conditions

kW = Total system power
Amps = outdoor unit amps (comp.+fan)

*Expanded Cooling Data – GLXT7CA6010**/CA*TA6030*3A*+EEP - LOW STAGE (cont.)*

			Outdoor Ambient Temperature																							
			65ºF				75ºF				85ºF				95ºF				105ºF				115ºF			
			Entering Indoor Wet Bulb Temperature																							
IDB	Airflow		59	63	67	71	59	63	67	71	59	63	67	71	59	63	67	71	59	63	67	71	59	63	67	71
80	1040	MBh	41.4	42.0	43.3	45.2	41.1	41.7	42.9	44.8	40.0	40.6	41.8	43.7	38.1	38.7	**39.9**	41.8	35.8	36.4	37.7	39.6	33.7	34.3	35.6	37.5
		S/T	0.69	0.62	0.50	0.4	1.00	0.63	0.50	0.4	1.00	0.65	0.53	0.4	1.00	0.67	**0.54**	0.4	1.00	0.69	0.56	0.4	1.00	1.00	0.61	0.5
		ΔT	33.9	31.8	27.8	23.7	33.8	31.7	27.8	23.7	34.1	32.0	28.1	24.0	33.8	31.7	**27.7**	23.7	33.5	31.4	27.5	23.4	34.8	32.7	28.8	24.7
		kW	2.18	2.18	2.18	2.2	2.45	2.45	2.44	2.5	2.74	2.74	2.74	2.8	3.06	3.06	**3.06**	3.1	3.42	3.42	3.41	3.4	3.84	3.84	3.83	3.9
		Amps	7.7	7.7	7.7	7.7	8.8	8.8	8.8	8.9	10.1	10.1	10.1	10.2	11.5	11.5	**11.5**	11.6	13.1	13.0	13.0	13.1	14.9	14.9	14.8	14.9
	1400	MBh	42.5	43.1	44.3	46.2	42.1	42.7	43.9	45.8	41.0	41.6	42.9	44.8	39.1	39.7	41.0	42.9	36.9	37.4	38.7	40.6	34.8	35.4	36.6	38.5
		S/T	0.83	0.77	0.64	0.5	1.00	0.77	0.65	0.5	1.00	0.79	0.67	0.5	1.00	0.81	0.69	0.6	1.00	0.83	0.71	0.6	1.00	1.00	0.75	0.6
		ΔT	30.9	28.8	24.8	20.7	30.8	28.7	24.8	20.7	31.1	29.0	25.1	21.0	30.8	28.7	24.7	20.7	30.5	28.4	24.5	20.4	31.8	29.7	25.8	21.7
		kW	2.22	2.21	2.21	2.23	2.48	2.48	2.47	2.49	2.78	2.77	2.77	2.79	3.09	3.09	3.09	3.11	3.45	3.45	3.44	3.46	3.87	3.87	3.86	3.88
		Amps	7.8	7.8	7.8	7.9	9.0	9.0	9.0	9.0	10.3	10.3	10.2	10.3	11.6	11.6	11.6	11.7	13.2	13.2	13.2	13.3	15.0	15.0	15.0	15.1
	1575	MBh	43.1	43.7	45.0	46.9	42.8	43.4	44.6	46.5	41.7	42.3	43.5	45.4	39.8	40.4	41.6	43.5	37.5	38.1	39.4	41.3	35.4	36.0	37.3	39.2
		S/T	0.86	0.80	0.67	0.5	1.00	0.80	0.68	0.5	1.00	0.82	0.70	0.6	1.00	0.84	0.72	0.6	1.00	1.00	0.74	0.6	1.00	1.00	0.79	0.7
		ΔT	29.8	27.7	23.8	19.7	29.8	27.6	23.7	19.6	30.0	27.9	24.0	19.9	29.7	27.6	23.7	19.6	29.4	27.3	23.4	19.3	30.8	28.7	24.7	20.6
		kW	2.23	2.23	2.22	2.2	2.49	2.49	2.49	2.5	2.79	2.79	2.78	2.8	3.11	3.10	3.10	3.1	3.46	3.46	3.46	3.5	3.88	3.88	3.87	3.9
		Amps	7.9	7.9	7.9	7.9	9.0	9.0	9.0	9.1	10.3	10.3	10.3	10.4	11.7	11.7	11.7	11.8	13.2	13.2	13.2	13.3	15.1	15.1	15.0	15.1
85	1040	MBh	42.1	42.7	44.0	45.9	41.8	42.4	43.6	45.5	40.7	41.3	42.5	44.4	38.8	39.4	40.6	42.6	36.5	37.1	38.4	40.3	34.4	35.0	36.3	38.2
		S/T	1.00	0.71	0.59	0.5	1.00	0.72	0.60	0.5	1.00	0.74	0.62	0.5	1.00	1.00	0.64	0.5	1.00	1.00	0.66	0.5	1.00	1.00	0.70	0.6
		ΔT	38.0	35.9	32.0	27.9	38.0	35.9	31.9	27.8	38.3	36.2	32.2	28.1	37.9	35.8	31.9	27.8	37.7	35.5	31.6	27.5	39.0	36.9	32.9	28.8
		kW	2.19	2.19	2.18	2.2	2.45	2.45	2.45	2.5	2.75	2.75	2.74	2.8	3.07	3.07	3.06	3.1	3.42	3.42	3.42	3.4	3.84	3.84	3.84	3.9
		Amps	7.7	7.7	7.7	7.8	8.9	8.9	8.8	8.9	10.1	10.1	10.1	10.2	11.5	11.5	11.5	11.6	13.1	13.1	13.1	13.1	14.9	14.9	14.9	15.0
	1400	MBh	43.2	43.8	45.0	46.9	42.8	43.4	44.6	46.5	41.7	42.3	43.6	45.5	39.9	40.4	41.7	43.6	37.6	38.2	39.4	41.3	35.5	36.1	37.3	39.2
		S/T	1.00	0.86	0.73	0.6	1.00	0.86	0.74	0.6	1.00	1.00	0.76	0.6	1.00	1.00	0.78	0.7	1.00	1.00	0.80	0.7	1.00	1.00	0.85	0.7
		ΔT	35.0	32.9	29.0	24.9	35.0	32.9	28.9	24.8	35.3	33.2	29.2	25.1	34.9	32.8	28.9	24.8	34.7	32.6	28.6	24.5	36.0	33.9	29.9	25.8
		kW	2.22	2.22	2.22	2.24	2.49	2.48	2.48	2.50	2.78	2.78	2.77	2.79	3.10	3.10	3.09	3.11	3.46	3.45	3.45	3.47	3.87	3.87	3.87	3.89
		Amps	7.9	7.8	7.8	7.9	9.0	9.0	9.0	9.1	10.3	10.3	10.3	10.3	11.7	11.7	11.6	11.7	13.2	13.2	13.2	13.3	15.0	15.0	15.0	15.1
	1575	MBh	43.8	44.4	45.7	47.6	43.5	44.1	45.3	47.2	42.4	43.0	44.2	46.1	40.5	41.1	42.3	44.2	38.2	38.8	40.1	42.0	36.1	36.7	38.0	39.9
		S/T	1.00	0.89	0.76	0.6	1.00	0.89	0.77	0.6	1.00	1.00	0.79	0.7	1.00	1.00	0.81	0.7	1.00	1.00	0.83	0.7	1.00	1.00	0.88	0.7
		ΔT	34.0	31.8	27.9	23.8	33.9	31.8	27.8	23.8	34.2	32.1	28.1	24.1	33.9	31.8	27.8	23.7	33.6	31.5	27.5	23.5	34.9	32.8	28.9	24.8
		kW	2.23	2.23	2.23	2.2	2.50	2.50	2.49	2.5	2.79	2.79	2.79	2.8	3.11	3.11	3.10	3.1	3.47	3.47	3.46	3.5	3.89	3.88	3.88	3.9
		Amps	7.9	7.9	7.9	8.0	9.1	9.0	9.0	9.1	10.3	10.3	10.3	10.4	11.7	11.7	11.7	11.8	13.3	13.3	13.2	13.3	15.1	15.1	15.1	15.1

IDB = Entering Indoor Dry Bulb Temperature

High and low pressures are measured at the liquid and suction service valves.

Shaded area is ACCA (TVA) conditions

kW = Total system power

Amps = outdoor unit amps (comp.+fan)

GLXT7CA2410**/CA*TA2422*3A* Conditions: 80 °F IBD, 67 °F IWB @ 840 CFM				
Outdoor Tem. ° F.	Total Btuh	Sensible Btuh	Latent Btuh	Total Watts
75	25,730	17,930	7,800	1,610
80	25,415	18,015	7,400	1,700
85	25,100	18,100	7,000	1,790
90	24,550	17,935	6,615	1,885
95	**24,000**	**17,770**	**6,230**	**1,980**
100	23,330	17,515	5,815	2,090
105	22,660	17,260	5,400	2,200
110	22,050	17,330	4,720	2,325
115	21,440	17,400	4,040	2,450
TVA Conditions @ 95° OD DB, 75° ID DB 63° ID WB				
95°	**23,140**	**17,360**	**5,780**	**1,980**

GLXT7CA3610**/CA*TA3626*3A* Conditions: 80 °F IBD, 67 °F IWB @ 1120 CFM				
Outdoor Tem. ° F.	Total Btuh	Sensible Btuh	Latent Btuh	Total Watts
75	37,530	25,800	11,730	2,330
80	37,065	25,920	11,145	2,465
85	36,600	26,040	10,560	2,600
90	35,800	25,800	10,000	2,745
95	**35,000**	**25,560**	**9,440**	**2,890**
100	34,020	25,195	8,825	3,055
105	33,040	24,830	8,210	3,220
110	32,150	24,935	7,215	3,410
115	31,260	25,040	6,220	3,600
TVA Conditions @ 95° OD DB, 75° ID DB 63° ID WB				
95°	**33,750**	**24,980**	**8,770**	**2,890**

GLXT7CA4810**/CA*TA6030*3A* Conditions: 80 °F IBD, 67 °F IWB @ 1400 CFM				
Outdoor Tem. ° F.	Total Btuh	Sensible Btuh	Latent Btuh	Total Watts
75	50,400	32,750	17,650	3,200
80	49,775	32,900	16,875	3,380
85	49,150	33,050	16,100	3,560
90	48,075	32,745	15,330	3,755
95	**47,000**	**32,440**	**14,560**	**3,950**
100	45,685	31,980	13,705	4,165
105	44,370	31,520	12,850	4,380
110	43,175	31,650	11,525	4,635
115	41,980	31,780	10,200	4,890
TVA Conditions @ 95° OD DB, 75° ID DB 63° ID WB				
95°	**45,320**	**31,700**	**13,620**	**3,950**

GLXT7CA6010**/CA*TA6030*3A* Conditions: 80 °F IBD, 67 °F IWB @ 1485 CFM				
Outdoor Tem. ° F.	Total Btuh	Sensible Btuh	Latent Btuh	Total Watts
75	61,120	38,560	22,560	3,930
80	60,360	38,745	21,615	4,165
85	59,600	38,930	20,670	4,400
90	58,300	38,565	19,735	4,655
95	**57,000**	**38,200**	**18,800**	**4,910**
100	55,410	37,660	17,750	5,195
105	53,820	37,120	16,700	5,480
110	52,365	37,275	15,090	5,810
115	50,910	37,430	13,480	6,140
TVA Conditions @ 95° OD DB, 75° ID DB 63° ID WB				
95°	**54,970**	**37,330**	**17,640**	**4,910**

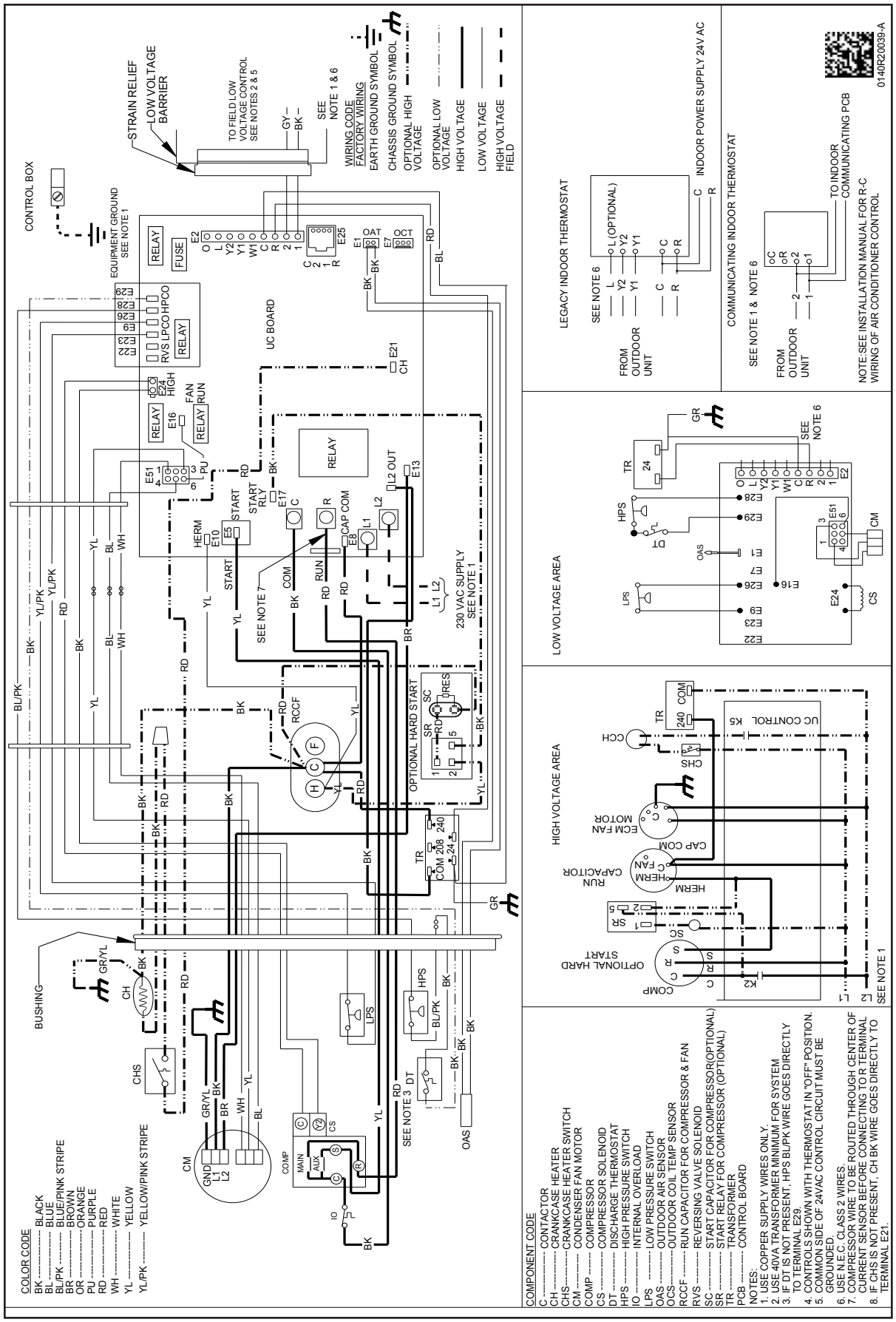

WARNING

High Voltage: Disconnect all power before servicing or installing this unit. Multiple power sources may be present. Failure to do so may cause property damage, personal injury, or death.

Wiring is subject to change. Always refer to the wiring diagram or the unit for the most up-to-date wiring.

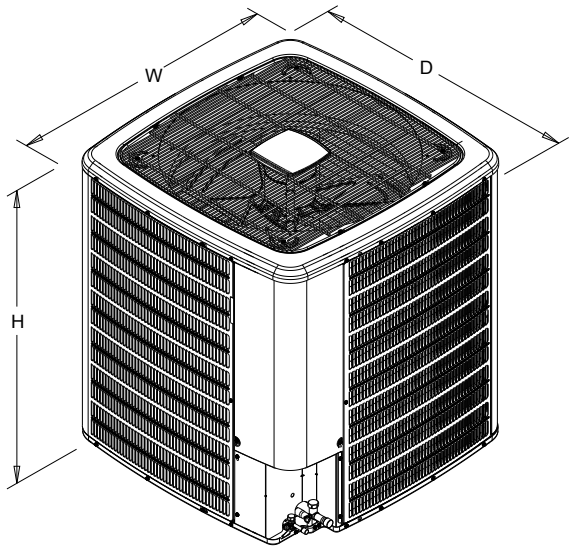

Model	Dimensions		
	W"	D"	H"
GLXT7C2410A*	35½	35½	39½
GLXT7C3610A*	35½	35½	39½
GLXT7C4810A*	35½	35½	41⅝
GLXT7C6010A*	35½	35½	41⅝

Accessories

Model	Description	GLXT7CA 2410A*	GLXT7CA 3610A*	GLXT7CA 4810A*	GLXT7CA 6010A*
ABK-20	Anchor Bracket Kit ^	X	X	X	X
ASC-01	Anti-Short Cycle Kit	X	X	X	X
CSR-U-1	Hard-start Kit	X	X		
CSR-U-2	Hard-start Kit			X	
CSR-U-3	Hard-start Kit				X
Factory Installed Crank Case Heater				X	X
FSK01A[1]	Freeze Protection Kit	X	X	X	X
LSK02A[2]	Liquid Line Solenoid Kit	X	X	X	X
OT18-60A	Outdoor Thermostat/Lockout Thermostat	X	X	X	X
TXV-FX-KX-2T	TXV Kit	X			
TXV-FX-KX-3T	TXV Kit		X		
TXV-FX-KX-5T	TXV Kit			X	X

^ Contains 20 brackets; four brackets needed to anchor unit to pad

[1] Installed on indoor coil

[2] Condensing units and heat pumps with reciprocating or rotary compressors require the use of start-assist components when used in conjunction with an indoor coil using a non-bleed thermal expansion valve refrigerant metering device or liquid solenoid kit. The TXV should always be sized based on the tonnage of the outdoor unit.

All AHRI system ratings are accessible in the System Configurator tool via PartnerLink.

The manufacturing entity reserves the right to discontinue, or change at any time, specifications or designs without notice or without incurring obligations.