Franklin
Air Conditioning & Heating

GLXS4B

Energy-Efficient Classic
R32 Split System Air Conditioner
Up to 15.2 SEER2
1½ To 5 Tons

R32

Contents

Nomenclature 2
Product Specifications 3
Expanded Cooling Data 4
Performance Data 18
Dimensions 20
Wiring Diagrams 21
Accessories 24

Standard Features

- High efficiency scroll compressor
- High-density foam compressor sound blanket
- Advanced Copeland® CoreSense™ Technology
- Fully charged for 15' of tubing length
- Copper tube/ enhanced aluminum fin coil-5mm diameter
- Factory-installed filter drier
- Sweat connection service valves with easy access to gauge ports
- Enclosed contactor with lug connection
- High-pressure switch
- Capacitors with extended life
- AHRI Certified
- ETL Listed

Cabinet Features

- Removable grille-style top design compliant with UL 60335-2-40
- Venturi for increased velocity of airflow
- Attractive Architectural Gray powder-paint finish with 500-hour salt-spray approval
- Wire fan discharge grille
- Steel louver coil guard
- Top and side maintenance access
- Single-panel access to controls with space provided for field-installed accessories
- When properly anchored, meets the 2023 Florida Building Code unit integrity requirements for hurricane-type winds (Anchor bracket kits available.)

10 YEAR PARTS LIMITED WARRANTY*

Intertek

COMPANY WITH QUALITY SYSTEM CERTIFIED BY DNV GL = ISO 9001 =

COMPANY WITH ENVIRONMENTAL SYSTEM CERTIFIED BY DNV GL = ISO 14001 =

BBB ACCREDITED BUSINESS

* Complete warranty details available from your local dealer or at www.goodmanmfg.com. To receive the 10-Year Parts Limited Warranty, online registration must be completed within 60 days of installation. Online registration is not required in California or Québec. The duration of warranty coverage in Texas and Florida differs in some cases.

G	L	X	S	4	B	A	36	1	0	A	A
1	2	3	4	5	6	7	8,9	10	11	12	13

BRAND

G - Goodman® Brand

TYPE

L R-32 Splits System

OUTDOOR TYPE

X Condenser

Z Heat Pump

COMPRESSOR TYPE

S Single-Stage
T Two-Stage

EFFICIENCY (SEER2) NOMINAL

13.4 - 13.7 = 3
13.8 - 14.5 = 4
14.6 - 15.9 = 5
16.0-16.9 = 6
17.0-17.9 = 7
18.0-18.9 = 8
19.0+ = 9

REGION

N North
S Southeast & North
A All Regions

FEATURE/APPLICATION

B - Standard
M - Multi-Family
C - Communicating (Top Flow)

NOMINAL CAPACITY

18 - 1½ Tons
24 - 2 Tons
30 - 2 Tons
36 - 3 Tons
42 - 3½ Tons
48 - 4 Tons
60 - 5 Tons

Electrical

1 208/230 V, 1 Phase, 60 Hz

Variation

MAJOR REVISION

A

MINOR REV

A

	GLXS4B A1810A*	GLXS4B A2410A*	GLXS4B A3010A*	GLXS4B A3610A*	GLXS4B A4210A*	GLXS4B A4810A*	GLXS4B A6010A*
COOLING CAPACITY							
Nominal Cooling (BTU/h)	18,000	24,000	30,000	36,000	42,000	48,000	60,000
Decibels (dBA)	74.0	74.0	71.0	67.0	72.0	73.0	76.0
COMPRESSOR							
RLA	6.5	8.2	11.2	13.4	14.4	19.4	23.9
LRA	32.7	41.2	52.5	83.3	112.2	127.7	148.0
Stage	Single	Single	Single	Single	Single	Single	Single
Type	Rotary	Rotary	Rotary	Scroll	Scroll	Scroll	Scroll
CONDENSER FAN MOTOR							
Motor Type	PSC	PSC	PSC	PSC	PSC	PSC	ECM
Horsepower (RPM)	1/8	1/8	1/6	1/6	1/6	1/6	1/3
FLA	0.70	0.70	0.95	0.95	0.95	0.95	2.6
REFRIGERATION SYSTEM							
Refrigerant Line Size[1]							
Liquid Line Size (“O.D.)	⅜"	⅜"	⅜"	⅜"	⅜"	⅜"	⅜"
Suction Line Size (“O.D.)	¾"	¾"	¾"	⅞"	1⅛"	1⅛"	1⅛"
Refrigerant Connection Size							
Liquid Valve Size (“O.D.)	⅜"	⅜"	⅜"	⅜"	⅜"	⅜"	⅜"
Suction Valve Size (“O.D.) [2]	¾"	¾"	¾"	⅞"	⅞"	⅞"	⅞"
Valve Connection Type	Sweat	Sweat	Sweat	Sweat	Sweat	Sweat	Sweat
Refrigerant Charge [3]	53	53	63	69	83	91	94
ELECTRICAL DATA							
Voltage-Phase	208/230-1	208/230-1	208/230-1	208/230-1	208/230-1	208/230-1	208/230-1
Minimum Circuit Ampacity [4]	10.9	10.9	15.0	17.8	19.0	25.2	32.4
Max. Overcurrent Protection [5]	15.0	15.0	25.0	30.0	30.0	40.0	50.0
Min / Max Volts	197/253	197/253	197/253	197/253	197/253	197/253	197/253
Electrical Conduit Size	½" or ¾"	½" or ¾"	½" or ¾"	½" or ¾"	½" or ¾"	½" or ¾"	½" or ¾"
EQUIPMENT WEIGHT (LBS)	117	117	155	158	210	211	224
SHIP WEIGHT (LBS)	132	132	170	173	225	226	239

[1] Line sizes denoted for 25’ line sets, tested and rated in accordance with AHRI Standard 210/240. For other line set lengths or sizes, refer to the Installation Instructions and/or the Long Line Set Applications guide.

[2] Any suction line adapter will need to be supplied by the field.

[3] Unit is factory charged with refrigerant for 15’ of ⅜” liquid line. System charge must be adjusted per the Final Charge Adjustment procedure found in the Installation Instructions.

[4] Wire size should be determined in accordance with National Electrical Codes; extensive wire runs will require larger wire sizes

[5] Must use time-delay fuses or HACR-type circuit breakers of the same size as noted.

NOTES

- Always check the S&R plate for electrical data on the unit being installed.

			Outdoor Ambient Temperature																							
			65				75				85				95				105				115			
			Entering Indoor Wet Bulb Temperature																							
IDB	Airflow		59	63	67	71	59	63	67	71	59	63	67	71	59	63	67	71	59	63	67	71	59	63	67	71
70	525	MBh	17.8	18.1	18.6	-	17.7	17.9	18.5	-	17.2	17.5	18.0	-	16.4	16.7	17.2	-	15.4	15.7	16.2	-	14.5	14.8	15.3	-
		S/T	0.53	0.46	0.34	-	0.54	0.47	0.34	-	0.56	0.49	0.37	-	0.58	0.51	0.38	-	0.60	0.53	0.40	-	0.64	0.57	0.45	-
		ΔT	23	21	17	-	23	21	17	-	24	22	18	-	23	21	17	-	23	21	17	-	24	22	18	-
		kW	1.12	1.12	1.12	-	1.24	1.24	1.23	-	1.37	1.37	1.37	-	1.51	1.51	1.51	-	1.67	1.67	1.67	-	1.85	1.85	1.85	-
		Amps	3.9	3.9	3.9	-	4.4	4.4	4.4	-	5.0	5.0	5.0	-	5.7	5.7	5.7	-	6.4	6.4	6.4	-	7.2	7.2	7.2	-
	625	MBh	18.1	18.4	18.9	-	18.0	18.2	18.8	-	17.5	17.8	18.3	-	16.7	17.0	17.5	-	15.7	16.0	16.5	-	14.8	15.1	15.6	-
		S/T	0.61	0.54	0.41	-	0.61	0.54	0.42	-	0.63	0.56	0.44	-	0.65	0.58	0.46	-	0.67	0.60	0.48	-	0.72	0.65	0.53	-
		ΔT	22	20	16	-	22	20	16	-	22	20	16	-	22	20	16	-	21	19	15	-	23	21	17	-
		kW	1.13	1.13	1.13	-	1.25	1.24	1.24	-	1.38	1.38	1.37	-	1.52	1.52	1.51	-	1.68	1.68	1.67	-	1.86	1.86	1.86	-
		Amps	3.9	3.9	3.9	-	4.5	4.5	4.4	-	5.1	5.1	5.0	-	5.7	5.7	5.7	-	6.4	6.4	6.4	-	7.3	7.3	7.3	-
	675	MBh	18.3	18.6	19.1	-	18.2	18.4	18.9	-	17.7	17.9	18.5	-	16.9	17.1	17.7	-	15.9	16.2	16.7	-	15.0	15.3	15.8	-
		S/T	0.63	0.56	0.44	-	0.63	0.56	0.44	-	0.66	0.59	0.46	-	0.67	0.60	0.48	-	0.69	0.62	0.50	-	0.74	0.67	0.55	-
		ΔT	21	19	15	-	21	19	15	-	21	19	15	-	21	19	15	-	21	19	15	-	22	20	16	-
		kW	1.13	1.13	1.13	-	1.25	1.25	1.25	-	1.38	1.38	1.38	-	1.52	1.52	1.52	-	1.68	1.68	1.68	-	1.86	1.86	1.86	-
		Amps	3.9	3.9	3.9	-	4.5	4.5	4.5	-	5.1	5.1	5.1	-	5.7	5.7	5.7	-	6.4	6.4	6.4	-	7.3	7.3	7.3	-
75	525	MBh	17.9	18.1	18.6	19.5	17.7	18.0	18.5	19.3	17.2	17.5	18.0	18.8	16.4	16.7	17.2	18.0	15.4	15.7	16.2	17.0	14.5	14.8	15.3	16.1
		S/T	0.65	0.58	0.46	0.3	0.65	0.58	0.46	0.3	0.68	0.61	0.48	0.4	0.69	0.62	0.50	0.4	0.71	0.64	0.52	0.4	1.00	0.69	0.57	0.4
		ΔT	28	26	22	18	28	26	22	18	28	26	22	18	28	26	22	18	28	26	22	18	29	27	23	19
		kW	1.12	1.12	1.12	1.1	1.24	1.24	1.23	1.2	1.37	1.37	1.36	1.4	1.51	1.51	1.51	1.5	1.67	1.67	1.66	1.7	1.85	1.85	1.85	1.9
		Amps	3.9	3.9	3.9	3.9	4.4	4.4	4.4	4.4	5.0	5.0	5.0	5.0	5.7	5.7	5.7	5.7	6.4	6.4	6.4	6.4	7.2	7.2	7.2	7.3
	625	MBh	18.2	18.4	18.9	19.8	18.0	18.2	18.8	19.6	17.5	17.8	18.3	19.1	16.7	**17.0**	17.5	18.3	15.7	16.0	16.5	17.3	14.8	15.1	15.6	16.4
		S/T	0.72	0.65	0.53	0.4	0.73	0.66	0.54	0.4	0.75	0.68	0.56	0.4	0.77	**0.70**	0.58	0.4	1.00	0.72	0.60	0.5	1.00	0.77	0.64	0.5
		ΔT	26	24	20	16	26	24	20	16	27	25	21	16	26	**24**	20	16	26	24	20	16	27	25	21	17
		kW	1.13	1.13	1.12	1.13	1.24	1.24	1.24	1.25	1.38	1.37	1.37	1.38	1.52	**1.52**	1.51	1.52	1.68	1.67	1.67	1.68	1.86	1.86	1.86	1.87
		Amps	3.9	3.9	3.9	3.9	4.5	4.5	4.4	4.5	5.1	5.1	5.0	5.1	5.7	**5.7**	5.7	5.7	6.4	6.4	6.4	6.5	7.3	7.3	7.3	7.3
	675	MBh	18.3	18.6	19.1	19.9	18.2	18.4	19.0	19.8	17.7	18.0	18.5	19.3	16.9	**17.1**	17.7	18.5	15.9	16.2	16.7	17.5	15.0	15.3	15.8	16.6
		S/T	0.74	0.68	0.55	0.4	0.75	0.68	0.56	0.4	0.77	0.70	0.58	0.5	0.79	**0.72**	0.60	0.5	1.00	0.74	0.62	0.5	1.00	0.79	0.67	0.5
		ΔT	26	24	20	16	26	24	20	15	26	24	20	16	26	**24**	20	15	25	23	19	15	27	25	21	16
		kW	1.13	1.13	1.13	1.1	1.25	1.25	1.25	1.3	1.38	1.38	1.38	1.4	1.52	**1.52**	1.52	1.5	1.68	1.68	1.68	1.7	1.86	1.86	1.86	1.9
		Amps	3.9	3.9	3.9	4.0	4.5	4.5	4.5	4.5	5.1	5.1	5.1	5.1	5.7	**5.7**	5.7	5.7	6.4	6.4	6.4	6.5	7.3	7.3	7.3	7.3

IDB: Entering Indoor Dry Bulb Temperature

Shaded area reflects ACCA (TVA) conditions

kW = Total system power

High and low pressures are measured at the liquid and suction service valves.

Amps = outdoor unit amps (comp.+fan)

Expanded Cooling Data — GLXS4BA1810A+ CAPTA2422A* (cont.)*

			Outdoor Ambient Temperature																							
			65				75				85				95				105				115			
			Entering Indoor Wet Bulb Temperature																							
IDB	Airflow		59	63	67	71	59	63	67	71	59	63	67	71	59	63	67	71	59	63	67	71	59	63	67	71
80	525	MBh	18.0	18.2	18.7	19.6	17.8	18.0	18.6	19.4	17.3	17.6	18.1	18.9	16.5	16.8	17.3	18.1	15.5	15.8	16.3	17.1	14.6	14.9	15.4	16.2
		S/T	0.76	0.69	0.57	0.4	0.77	0.70	0.58	0.4	0.79	0.72	0.60	0.5	1.00	0.74	0.62	0.5	1.00	0.76	0.64	0.5	1.00	0.81	0.68	0.6
		ΔT	33	31	27	23	33	31	27	23	33	31	27	23	33	31	27	23	33	30	26	22	34	32	28	24
		kW	1.12	1.12	1.12	1.1	1.24	1.24	1.23	1.2	1.37	1.37	1.37	1.4	1.51	1.51	1.51	1.5	1.67	1.67	1.66	1.7	1.85	1.85	1.85	1.9
		Amps	3.9	3.9	3.9	3.9	4.4	4.4	4.4	4.4	5.0	5.0	5.0	5.0	5.7	5.7	5.7	5.7	6.4	6.4	6.4	6.4	7.2	7.2	7.2	7.3
	625	MBh	18.2	18.5	19.0	19.8	18.1	18.3	18.9	19.7	17.6	17.9	18.4	19.2	16.8	17.1	**17.6**	18.4	15.8	16.1	16.6	17.4	14.9	15.2	15.7	16.5
		S/T	0.84	0.77	0.64	0.5	0.84	0.77	0.65	0.5	1.00	0.80	0.67	0.5	1.00	0.81	**0.69**	0.6	1.00	0.83	0.71	0.6	1.00	0.88	0.76	0.6
		ΔT	31	29	25	21	31	29	25	21	31	29	25	21	31	29	**25**	21	31	29	25	21	32	30	26	22
		kW	1.13	1.13	1.13	1.13	1.25	1.24	1.24	1.25	1.38	1.38	1.37	1.38	1.52	1.52	**1.51**	1.52	1.68	1.67	1.67	1.68	1.86	1.86	1.86	1.87
		Amps	3.9	3.9	3.9	4.0	4.5	4.5	4.4	4.5	5.1	5.1	5.0	5.1	5.7	5.7	**5.7**	5.7	6.4	6.4	6.4	6.5	7.3	7.3	7.3	7.3
	675	MBh	18.4	18.7	19.2	20.0	18.3	18.5	19.0	19.9	17.8	18.0	18.6	19.4	17.0	17.2	17.8	18.6	16.0	16.3	16.8	17.6	15.1	15.4	15.9	16.7
		S/T	0.86	0.79	0.67	0.5	0.86	0.80	0.67	0.5	1.00	0.82	0.69	0.6	1.00	0.84	0.71	0.6	1.00	0.86	0.73	0.6	1.00	0.90	0.78	0.6
		ΔT	30	28	24	20	30	28	24	20	31	29	25	20	30	28	24	20	30	28	24	20	31	29	25	21
		kW	1.13	1.13	1.13	1.1	1.25	1.25	1.25	1.3	1.38	1.38	1.38	1.4	1.52	1.52	1.52	1.5	1.68	1.68	1.68	1.7	1.86	1.86	1.86	1.9
		Amps	3.9	3.9	3.9	4.0	4.5	4.5	4.5	4.5	5.1	5.1	5.1	5.1	5.7	5.7	5.7	5.7	6.4	6.4	6.4	6.5	7.3	7.3	7.3	7.3
85	525	MBh	18.3	18.5	19.0	19.9	18.1	18.3	18.9	19.7	17.6	17.9	18.4	19.2	16.8	17.1	17.6	18.4	15.8	16.1	16.6	17.4	14.9	15.2	15.7	16.5
		S/T	1.00	0.78	0.66	0.5	1.00	0.79	0.67	0.5	1.00	0.81	0.69	0.6	1.00	0.83	0.71	0.6	1.00	0.85	0.73	0.6	1.00	1.00	0.77	0.6
		ΔT	37	35	31	27	37	35	31	27	37	35	31	27	37	35	31	27	37	35	31	26	38	36	32	28
		kW	1.12	1.12	1.12	1.1	1.24	1.24	1.24	1.2	1.37	1.37	1.37	1.4	1.51	1.51	1.51	1.5	1.67	1.67	1.67	1.7	1.86	1.85	1.85	1.9
		Amps	3.9	3.9	3.9	3.9	4.4	4.4	4.4	4.5	5.0	5.0	5.0	5.1	5.7	5.7	5.7	5.7	6.4	6.4	6.4	6.4	7.3	7.2	7.2	7.3
	625	MBh	18.5	18.8	19.3	20.2	18.4	18.6	19.2	20.0	17.9	18.2	18.7	19.5	17.1	17.4	17.9	18.7	16.1	16.4	16.9	17.7	15.2	15.5	16.0	16.8
		S/T	1.00	0.86	0.74	0.6	1.00	0.87	0.74	0.6	1.00	0.89	0.76	0.6	1.00	0.91	0.78	0.7	1.00	1.00	0.80	0.7	1.00	1.00	0.85	0.7
		ΔT	35	33	29	25	35	33	29	25	36	34	30	25	35	33	29	25	35	33	29	25	36	34	30	26
		kW	1.13	1.13	1.13	1.14	1.25	1.25	1.24	1.25	1.38	1.38	1.38	1.38	1.52	1.52	1.52	1.53	1.68	1.68	1.68	1.68	1.86	1.86	1.86	1.87
		Amps	3.9	3.9	3.9	4.0	4.5	4.5	4.5	4.5	5.1	5.1	5.1	5.1	5.7	5.7	5.7	5.7	6.4	6.4	6.4	6.5	7.3	7.3	7.3	7.3
	675	MBh	18.7	19.0	19.5	20.3	18.6	18.8	19.3	20.2	18.1	18.3	18.9	19.7	17.3	17.5	18.1	18.9	16.3	16.6	17.1	17.9	15.4	15.7	16.2	17.0
		S/T	1.00	0.88	0.76	0.6	1.00	0.89	0.76	0.6	1.00	0.91	0.79	0.7	1.00	0.93	0.80	0.7	1.00	1.00	0.82	0.7	1.00	1.00	0.87	0.7
		ΔT	35	33	29	24	35	32	29	24	35	33	29	25	35	32	28	24	34	32	28	24	36	34	30	25
		kW	1.13	1.13	1.13	1.1	1.25	1.25	1.25	1.3	1.38	1.38	1.38	1.4	1.52	1.52	1.52	1.5	1.68	1.68	1.68	1.7	1.87	1.87	1.86	1.9
		Amps	3.9	3.9	3.9	4.0	4.5	4.5	4.5	4.5	5.1	5.1	5.1	5.1	5.7	5.7	5.7	5.8	6.5	6.5	6.4	6.5	7.3	7.3	7.3	7.3

IDB: Entering Indoor Dry Bulb Temperature

Shaded area reflects AHRI conditions

kW = Total system power

High and low pressures are measured at the liquid and suction service valves.

Amps = outdoor unit amps (comp.+fan)

Expanded Cooling Data — GLXS4BA2410A*+ CAPTA2422A*

			Outdoor Ambient Temperature																							
			65				75				85				95				105				115			
			Entering Indoor Wet Bulb Temperature																							
IDB	Airflow		59	63	67	71	59	63	67	71	59	63	67	71	59	63	67	71	59	63	67	71	59	63	67	71
70	700	MBh	24.3	24.7	25.4	-	24.1	24.4	25.2	-	23.5	23.8	24.5	-	22.4	22.7	23.5	-	21.1	21.4	22.1	-	19.9	20.2	20.9	-
		S/T	0.63	0.56	0.43	-	0.64	0.57	0.44	-	0.66	0.59	0.46	-	0.68	0.61	0.48	-	0.70	0.63	0.50	-	0.75	0.68	0.55	-
		ΔT	21	19	15	-	21	19	15	-	21	19	15	-	21	19	15	-	20	18	15	-	22	20	16	-
		kW	1.48	1.48	1.47	-	1.65	1.64	1.64	-	1.83	1.83	1.83	-	2.04	2.04	2.03	-	2.26	2.26	2.26	-	2.53	2.53	2.53	-
		Amps	5.3	5.3	5.3	-	6.1	6.1	6.1	-	7.0	7.0	7.0	-	7.9	7.9	7.9	-	8.9	8.9	8.9	-	10.2	10.2	10.1	-
	800	MBh	24.8	25.1	25.8	-	24.5	24.9	25.6	-	23.9	24.3	25.0	-	22.8	23.2	23.9	-	21.5	21.9	22.6	-	20.3	20.7	21.4	-
		S/T	0.67	0.59	0.47	-	0.67	0.60	0.47	-	0.70	0.62	0.50	-	0.71	0.64	0.51	-	0.74	0.66	0.53	-	1.00	0.71	0.58	-
		ΔT	20	18	14	-	20	17	14	-	20	18	14	-	20	17	14	-	19	17	13	-	21	18	15	-
		kW	1.49	1.48	1.48	-	1.65	1.65	1.65	-	1.84	1.84	1.84	-	2.04	2.04	2.04	-	2.27	2.27	2.27	-	2.54	2.54	2.53	-
		Amps	5.4	5.4	5.4	-	6.2	6.2	6.1	-	7.0	7.0	7.0	-	7.9	7.9	7.9	-	9.0	9.0	9.0	-	10.2	10.2	10.2	-
	900	MBh	25.3	25.6	26.4	-	25.1	25.4	26.1	-	24.5	24.8	25.5	-	23.4	23.7	24.4	-	22.1	22.4	23.1	-	20.9	21.2	21.9	-
		S/T	0.67	0.60	0.47	-	0.68	0.61	0.48	-	0.70	0.63	0.50	-	0.72	0.65	0.52	-	0.74	0.67	0.54	-	1.00	0.72	0.59	-
		ΔT	19	17	13	-	18	16	13	-	19	17	13	-	18	16	13	-	18	16	12	-	19	17	14	-
		kW	1.49	1.49	1.49	-	1.66	1.66	1.66	-	1.85	1.85	1.84	-	2.05	2.05	2.05	-	2.28	2.28	2.27	-	2.55	2.54	2.54	-
		Amps	5.4	5.4	5.4	-	6.2	6.2	6.2	-	7.0	7.0	7.0	-	8.0	8.0	8.0	-	9.0	9.0	9.0	-	10.2	10.2	10.2	-
75	700	MBh	24.3	24.7	25.4	26.5	24.1	24.5	25.2	26.3	23.5	23.8	24.6	25.6	22.4	22.8	23.5	24.6	21.1	21.4	22.2	23.3	19.9	20.2	21.0	22.0
		S/T	0.75	0.68	0.55	0.4	0.76	0.69	0.56	0.4	0.78	0.71	0.58	0.4	0.80	0.73	0.60	0.5	1.00	0.75	0.62	0.5	1.00	0.80	0.67	0.5
		ΔT	25	23	19	15	25	23	19	15	25	23	20	16	25	23	19	15	25	23	19	15	26	24	20	16
		kW	1.48	1.48	1.47	1.5	1.64	1.64	1.64	1.7	1.83	1.83	1.83	1.8	2.04	2.03	2.03	2.0	2.26	2.26	2.26	2.3	2.53	2.53	2.52	2.5
		Amps	5.3	5.3	5.3	5.4	6.1	6.1	6.1	6.2	7.0	7.0	7.0	7.0	7.9	7.9	7.9	7.9	8.9	8.9	8.9	9.0	10.2	10.2	10.1	10.2
	800	MBh	24.8	25.1	25.8	26.9	24.6	24.9	25.6	26.7	23.9	24.3	25.0	26.1	22.9	**23.2**	23.9	25.0	21.5	21.9	22.6	23.7	20.3	20.7	21.4	22.5
		S/T	0.79	0.72	0.59	0.5	0.79	0.72	0.59	0.5	0.82	0.75	0.62	0.5	1.00	**0.76**	0.64	0.5	1.00	0.79	0.66	0.5	1.00	0.83	0.71	0.6
		ΔT	24	22	18	14	24	22	18	14	24	22	18	15	24	**22**	18	14	24	22	18	14	25	23	19	15
		kW	1.48	1.48	1.48	1.49	1.65	1.65	1.65	1.66	1.84	1.84	1.84	1.85	2.04	**2.04**	2.04	2.05	2.27	2.27	2.27	2.28	2.54	2.54	2.53	2.55
		Amps	5.4	5.4	5.4	5.4	6.2	6.1	6.1	6.2	7.0	7.0	7.0	7.0	7.9	**7.9**	7.9	8.0	9.0	9.0	9.0	9.0	10.2	10.2	10.2	10.2
	900	MBh	25.3	25.7	26.4	27.5	25.1	25.4	26.2	27.3	24.5	24.8	25.5	26.6	23.4	**23.7**	24.5	25.6	22.1	22.4	23.1	24.2	20.9	21.2	21.9	23.0
		S/T	0.80	0.72	0.60	0.5	0.80	0.73	0.60	0.5	0.83	0.75	0.63	0.5	1.00	**0.77**	0.64	0.5	1.00	0.79	0.66	0.5	1.00	0.84	0.71	0.6
		ΔT	23	21	17	13	23	21	17	13	23	21	17	13	23	**21**	17	13	23	21	17	13	24	22	18	14
		kW	1.49	1.49	1.49	1.5	1.66	1.66	1.66	1.7	1.85	1.85	1.84	1.9	2.05	**2.05**	2.05	2.1	2.28	2.28	2.27	2.3	2.54	2.54	2.54	2.6
		Amps	5.4	5.4	5.4	5.5	6.2	6.2	6.2	6.2	7.0	7.0	7.0	7.1	8.0	**8.0**	8.0	8.0	9.0	9.0	9.0	9.1	10.2	10.2	10.2	10.3

IDB: Entering Indoor Dry Bulb Temperature

Shaded area reflects ACCA (TVA) conditions

kW = Total system power

High and low pressures are measured at the liquid and suction service valves.

Amps = outdoor unit amps (comp.+fan)

			Outdoor Ambient Temperature																							
			65				75				85				95				105				115			
			Entering Indoor Wet Bulb Temperature																							
IDB	Airflow		59	63	67	71	59	63	67	71	59	63	67	71	59	63	67	71	59	63	67	71	59	63	67	71
80	700	MBh	24.5	24.8	25.5	26.6	24.2	24.6	25.3	26.4	23.6	24.0	24.7	25.8	22.5	22.9	23.6	24.7	21.2	21.6	22.3	23.4	20.0	20.4	21.1	22.2
		S/T	0.87	0.80	0.67	0.5	0.88	0.81	0.68	0.5	1.00	0.83	0.70	0.6	1.00	0.85	0.72	0.6	1.00	0.87	0.74	0.6	1.00	0.92	0.79	0.7
		ΔT	30	28	24	20	30	28	24	20	30	28	24	20	30	28	24	20	29	27	24	20	31	29	25	21
		kW	1.48	1.48	1.47	1.5	1.65	1.64	1.64	1.7	1.83	1.83	1.83	1.8	2.04	2.04	2.03	2.0	2.26	2.26	2.26	2.3	2.53	2.53	2.53	2.5
		Amps	5.3	5.3	5.3	5.4	6.1	6.1	6.1	6.2	7.0	7.0	7.0	7.0	7.9	7.9	7.9	7.9	8.9	8.9	8.9	9.0	10.2	10.2	10.1	10.2
	800	MBh	24.9	25.2	26.0	27.1	24.7	25.0	25.7	26.8	24.1	24.4	25.1	26.2	23.0	23.3	**24.0**	25.1	21.7	22.0	22.7	23.8	20.5	20.8	21.5	22.6
		S/T	0.91	0.84	0.71	0.6	1.00	0.84	0.71	0.6	1.00	0.87	0.74	0.6	1.00	0.88	**0.76**	0.6	1.00	0.90	0.78	0.6	1.00	1.00	0.82	0.7
		ΔT	29	27	23	19	28	26	23	19	29	27	23	19	28	26	**23**	19	28	26	22	18	29	27	24	20
		kW	1.49	1.48	1.48	1.49	1.65	1.65	1.65	1.66	1.84	1.84	1.84	1.85	2.04	2.04	**2.04**	2.05	2.27	2.27	2.27	2.28	2.54	2.54	2.53	2.55
		Amps	5.4	5.4	5.4	5.4	6.2	6.1	6.1	6.2	7.0	7.0	7.0	7.1	7.9	7.9	**7.9**	8.0	9.0	9.0	9.0	9.0	10.2	10.2	10.2	10.2
	900	MBh	25.4	25.8	26.5	27.6	25.2	25.6	26.3	27.4	24.6	24.9	25.7	26.8	23.5	23.9	24.6	25.7	22.2	22.5	23.3	24.4	21.0	21.3	22.1	23.2
		S/T	0.92	0.84	0.71	0.6	1.00	0.85	0.72	0.6	1.00	0.87	0.74	0.6	1.00	0.89	0.76	0.6	1.00	0.91	0.78	0.6	1.00	1.00	0.83	0.7
		ΔT	28	25	22	18	27	25	22	18	28	26	22	18	27	25	22	18	27	25	21	17	28	26	23	19
		kW	1.49	1.49	1.49	1.5	1.66	1.66	1.66	1.7	1.85	1.85	1.84	1.9	2.05	2.05	2.05	2.1	2.28	2.28	2.27	2.3	2.55	2.54	2.54	2.6
		Amps	5.4	5.4	5.4	5.5	6.2	6.2	6.2	6.2	7.0	7.0	7.0	7.1	8.0	8.0	8.0	8.0	9.0	9.0	9.0	9.1	10.2	10.2	10.2	10.3
85	700	MBh	24.9	25.2	25.9	27.0	24.7	25.0	25.7	26.8	24.0	24.4	25.1	26.2	22.9	**23.3**	24.0	25.1	21.6	22.0	22.7	23.8	20.4	20.8	21.5	22.6
		S/T	1.00	0.90	0.77	0.6	1.00	0.90	0.77	0.6	1.00	0.93	0.80	0.7	1.00	**0.94**	0.82	0.7	1.00	1.00	0.84	0.7	1.00	1.00	0.89	0.8
		ΔT	34	32	28	24	34	32	28	24	34	32	28	24	34	**32**	28	24	33	31	28	24	35	33	29	25
		kW	1.48	1.48	1.48	1.5	1.65	1.65	1.64	1.7	1.84	1.84	1.83	1.8	2.04	**2.04**	2.04	2.0	2.27	2.27	2.26	2.3	2.53	2.53	2.53	2.5
		Amps	5.4	5.4	5.3	5.4	6.1	6.1	6.1	6.2	7.0	7.0	7.0	7.0	7.9	**7.9**	7.9	8.0	9.0	9.0	8.9	9.0	10.2	10.2	10.2	10.2
	800	MBh	25.3	25.6	26.4	27.5	25.1	25.4	26.1	27.2	24.5	24.8	25.5	26.6	23.4	23.7	24.4	25.5	22.1	22.4	23.1	24.2	20.9	21.2	21.9	23.0
		S/T	1.00	0.93	0.80	0.7	1.00	0.94	0.81	0.7	1.00	0.96	0.83	0.7	1.00	1.00	0.85	0.7	1.00	1.00	0.87	0.7	1.00	1.00	0.92	0.8
		ΔT	33	31	27	23	32	30	27	23	33	31	27	23	32	30	27	23	32	30	26	22	33	31	28	24
		kW	1.49	1.49	1.48	1.50	1.66	1.66	1.65	1.67	1.84	1.84	1.84	1.85	2.05	2.05	2.04	2.06	2.27	2.27	2.27	2.28	2.54	2.54	2.54	2.55
		Amps	5.4	5.4	5.4	5.4	6.2	6.2	6.2	6.2	7.0	7.0	7.0	7.1	8.0	8.0	7.9	8.0	9.0	9.0	9.0	9.0	10.2	10.2	10.2	10.3
	900	MBh	25.8	26.2	26.9	28.0	25.6	26.0	26.7	27.8	25.0	25.3	26.1	27.2	23.9	**24.3**	25.0	26.1	22.6	22.9	23.7	24.8	21.4	21.7	22.5	23.6
		S/T	1.00	0.94	0.81	0.7	1.00	0.94	0.82	0.7	1.00	0.97	0.84	0.7	1.00	**1.00**	0.86	0.7	1.00	1.00	0.88	0.7	1.00	1.00	0.93	0.8
		ΔT	32	29	26	22	31	29	26	22	32	30	26	22	31	**29**	26	22	31	29	25	21	32	30	27	23
		kW	1.50	1.49	1.49	1.5	1.66	1.66	1.66	1.7	1.85	1.85	1.85	1.9	2.06	**2.05**	2.05	2.1	2.28	2.28	2.28	2.3	2.55	2.55	2.54	2.6
		Amps	5.4	5.4	5.4	5.5	6.2	6.2	6.2	6.2	7.1	7.1	7.0	7.1	8.0	**8.0**	8.0	8.0	9.0	9.0	9.0	9.1	10.2	10.2	10.2	10.3

IDB: Entering Indoor Dry Bulb Temperature

Shaded area reflects AHRI conditions

kW = Total system power

High and low pressures are measured at the liquid and suction service valves.

Amps = outdoor unit amps (comp.+fan)

			Outdoor Ambient Temperature																							
			65				75				85				95				105				115			
			Entering Indoor Wet Bulb Temperature																							
IDB	Airflow		59	63	67	71	59	63	67	71	59	63	67	71	59	63	67	71	59	63	67	71	59	63	67	71
70	875	MBh	29.2	29.6	30.5	-	29.0	29.4	30.2	-	28.2	28.6	29.5	-	26.9	27.3	28.2	-	25.3	25.7	26.6	-	23.8	24.3	25.1	-
		S/T	0.62	0.54	0.41	-	0.62	0.55	0.42	-	0.65	0.57	0.44	-	0.67	0.59	0.46	-	0.69	0.61	0.48	-	0.74	0.66	0.53	-
		ΔT	21	19	15	-	21	19	15	-	21	19	15	-	21	19	15	-	20	18	15	-	22	20	16	-
		kW	1.80	1.80	1.80	-	2.00	2.00	1.99	-	2.22	2.22	2.22	-	2.46	2.46	2.46	-	2.73	2.73	2.72	-	3.04	3.04	3.04	-
		Amps	6.3	6.3	6.3	-	7.2	7.2	7.2	-	8.2	8.2	8.2	-	9.3	9.3	9.3	-	10.6	10.6	10.6	-	12.0	12.0	12.0	-
	950	MBh	29.5	29.9	30.8	-	29.2	29.6	30.5	-	28.5	28.9	29.7	-	27.2	27.6	28.4	-	25.6	26.0	26.8	-	24.1	24.5	25.4	-
		S/T	0.65	0.58	0.44	-	0.66	0.58	0.45	-	0.68	0.61	0.47	-	0.70	0.63	0.49	-	0.72	0.65	0.52	-	0.77	0.70	0.57	-
		ΔT	20	18	14	-	20	18	14	-	20	18	15	-	20	18	14	-	20	18	14	-	21	19	15	-
		kW	1.81	1.81	1.80	-	2.01	2.00	2.00	-	2.23	2.23	2.22	-	2.47	2.47	2.46	-	2.74	2.73	2.73	-	3.05	3.05	3.05	-
		Amps	6.4	6.3	6.3	-	7.3	7.3	7.2	-	8.3	8.3	8.3	-	9.4	9.4	9.4	-	10.6	10.6	10.6	-	12.0	12.0	12.0	-
	1125	MBh	30.2	30.6	31.5	-	29.9	30.3	31.2	-	29.2	29.6	30.4	-	27.9	28.3	29.1	-	26.3	26.7	27.5	-	24.8	25.2	26.1	-
		S/T	0.69	0.62	0.48	-	0.70	0.62	0.49	-	0.72	0.65	0.52	-	0.74	0.67	0.53	-	0.76	0.69	0.56	-	1.00	0.74	0.61	-
		ΔT	19	17	13	-	19	17	13	-	19	17	13	-	19	17	13	-	18	16	13	-	20	18	14	-
		kW	1.82	1.82	1.81	-	2.02	2.02	2.01	-	2.24	2.24	2.23	-	2.48	2.48	2.47	-	2.75	2.75	2.74	-	3.06	3.06	3.06	-
		Amps	6.4	6.4	6.4	-	7.3	7.3	7.3	-	8.3	8.3	8.3	-	9.4	9.4	9.4	-	10.7	10.7	10.6	-	12.1	12.1	12.1	-
75	875	MBh	29.2	29.7	30.5	31.9	29.0	29.4	30.3	31.6	28.2	28.6	29.5	30.8	26.9	27.3	28.2	29.5	25.3	25.7	26.6	27.9	23.9	24.3	25.1	26.5
		S/T	0.74	0.67	0.54	0.4	0.75	0.67	0.54	0.4	0.77	0.70	0.57	0.4	0.79	0.72	0.59	0.4	1.00	0.74	0.61	0.5	1.00	0.79	0.66	0.5
		ΔT	25	23	19	16	25	23	19	16	25	23	20	16	25	23	19	16	25	23	19	15	26	24	20	17
		kW	1.80	1.80	1.79	1.8	2.00	2.00	1.99	2.0	2.22	2.22	2.21	2.2	2.46	2.46	2.46	2.5	2.73	2.73	2.72	2.7	3.04	3.04	3.04	3.1
		Amps	6.3	6.3	6.3	6.4	7.2	7.2	7.2	7.3	8.2	8.2	8.2	8.3	9.3	9.3	9.3	9.4	10.6	10.6	10.5	10.6	12.0	12.0	12.0	12.1
	950	MBh	29.5	29.9	30.8	32.1	29.2	29.6	30.5	31.8	28.5	28.9	29.8	31.1	27.2	**27.6**	28.4	29.8	25.6	26.0	26.9	28.2	24.1	24.5	25.4	26.7
		S/T	0.78	0.70	0.57	0.4	0.78	0.71	0.58	0.4	0.81	0.73	0.60	0.5	0.83	**0.75**	0.62	0.5	1.00	0.77	0.64	0.5	1.00	0.82	0.69	0.6
		ΔT	24	22	19	15	24	22	19	15	25	23	19	15	24	**22**	19	15	24	22	18	15	25	23	20	16
		kW	1.81	1.80	1.80	1.82	2.00	2.00	2.00	2.01	2.23	2.22	2.22	2.24	2.47	**2.46**	2.46	2.48	2.73	2.73	2.73	2.74	3.05	3.05	3.04	3.06
		Amps	6.3	6.3	6.3	6.4	7.3	7.2	7.2	7.3	8.3	8.3	8.2	8.3	9.4	**9.4**	9.3	9.4	10.6	10.6	10.6	10.6	12.0	12.0	12.0	12.1
	1125	MBh	30.2	30.6	31.5	32.8	29.9	30.4	31.2	32.6	29.2	29.6	30.5	31.8	27.9	**28.3**	29.2	30.5	26.3	26.7	27.6	28.9	24.8	25.2	26.1	27.4
		S/T	0.82	0.74	0.61	0.5	0.82	0.75	0.62	0.5	0.85	0.77	0.64	0.5	1.00	**0.79**	0.66	0.5	1.00	0.81	0.68	0.5	1.00	0.87	0.73	0.6
		ΔT	23	21	17	14	23	21	17	13	23	21	18	14	23	**21**	17	13	23	21	17	13	24	22	18	14
		kW	1.82	1.82	1.81	1.8	2.02	2.01	2.01	2.0	2.24	2.24	2.23	2.2	2.48	**2.48**	2.47	2.5	2.75	2.75	2.74	2.8	3.06	3.06	3.06	3.1
		Amps	6.4	6.4	6.4	6.4	7.3	7.3	7.3	7.4	8.3	8.3	8.3	8.4	9.4	**9.4**	9.4	9.5	10.7	10.6	10.6	10.7	12.1	12.1	12.1	12.1

IDB: Entering Indoor Dry Bulb Temperature

Shaded area reflects ACCA (TVA) conditions

kW = Total system power

High and low pressures are measured at the liquid and suction service valves.

Amps = outdoor unit amps (comp.+fan)

Expanded Cooling Data — GLXS4BA3010A+ CAPTA3026A* (cont.)*

			Outdoor Ambient Temperature																							
			65				75				85				95				105				115			
			Entering Indoor Wet Bulb Temperature																							
IDB	Airflow		59	63	67	71	59	63	67	71	59	63	67	71	59	63	67	71	59	63	67	71	59	63	67	71
80	875	MBh	29.4	29.8	30.7	32.0	29.1	29.5	30.4	31.7	28.4	28.8	29.7	31.0	27.1	27.5	28.4	29.7	25.5	25.9	26.8	28.1	24.0	24.4	25.3	26.6
		S/T	0.87	0.79	0.66	0.5	0.87	0.80	0.66	0.5	1.00	0.82	0.69	0.5	1.00	0.84	0.71	0.6	1.00	0.86	0.73	0.6	1.00	0.91	0.78	0.6
		ΔT	29	27	24	20	29	27	24	20	30	28	24	20	29	27	24	20	29	27	23	20	30	28	25	21
		kW	1.80	1.80	1.80	1.8	2.00	2.00	1.99	2.0	2.22	2.22	2.22	2.2	2.46	2.46	2.46	2.5	2.73	2.73	2.72	2.7	3.04	3.04	3.04	3.1
		Amps	6.3	6.3	6.3	6.4	7.2	7.2	7.2	7.3	8.2	8.2	8.2	8.3	9.3	9.3	9.3	9.4	10.6	10.6	10.6	10.6	12.0	12.0	12.0	12.1
	950	MBh	29.6	30.1	30.9	32.3	29.4	29.8	30.7	32.0	28.6	29.0	29.9	31.2	27.3	27.7	**28.6**	29.9	25.7	26.1	27.0	28.3	24.3	24.7	25.5	26.9
		S/T	0.90	0.83	0.69	0.6	0.91	0.83	0.70	0.6	1.00	0.86	0.72	0.6	1.00	0.87	**0.74**	0.6	1.00	0.90	0.76	0.6	1.00	0.95	0.81	0.7
		ΔT	29	27	23	19	29	27	23	19	29	27	23	19	29	27	**23**	19	28	26	23	19	30	28	24	20
		kW	1.81	1.80	1.80	1.82	2.01	2.00	2.00	2.02	2.23	2.23	2.22	2.24	2.47	2.47	**2.46**	2.48	2.74	2.73	2.73	2.75	3.05	3.05	3.05	3.06
		Amps	6.3	6.3	6.3	6.4	7.3	7.3	7.2	7.3	8.3	8.3	8.3	8.3	9.4	9.4	**9.4**	9.4	10.6	10.6	10.6	10.6	12.0	12.0	12.0	12.1
	1125	MBh	30.4	30.8	31.6	33.0	30.1	30.5	31.4	32.7	29.3	29.7	30.6	31.9	28.0	28.4	29.3	30.6	26.4	26.8	27.7	29.0	25.0	25.4	26.3	27.6
		S/T	0.94	0.87	0.73	0.6	1.00	0.87	0.74	0.6	1.00	0.90	0.76	0.6	1.00	0.92	0.78	0.6	1.00	0.94	0.80	0.7	1.00	1.00	0.86	0.7
		ΔT	27	25	22	18	27	25	22	18	27	26	22	18	27	25	22	18	27	25	21	18	28	26	23	19
		kW	1.82	1.82	1.81	1.8	2.02	2.02	2.01	2.0	2.24	2.24	2.23	2.2	2.48	2.48	2.47	2.5	2.75	2.75	2.74	2.8	3.06	3.06	3.06	3.1
		Amps	6.4	6.4	6.4	6.5	7.3	7.3	7.3	7.4	8.3	8.3	8.3	8.4	9.4	9.4	9.4	9.5	10.7	10.7	10.6	10.7	12.1	12.1	12.1	12.1
85	875	MBh	29.9	30.3	31.2	32.5	29.6	30.0	30.9	32.2	28.9	29.3	30.1	31.5	27.6	28.0	28.8	30.2	26.0	26.4	27.2	28.6	24.5	24.9	25.8	27.1
		S/T	1.00	0.89	0.76	0.6	1.00	0.90	0.76	0.6	1.00	0.92	0.79	0.6	1.00	0.94	0.81	0.7	1.00	1.00	0.83	0.7	1.00	1.00	0.88	0.7
		ΔT	33	31	28	24	33	31	28	24	33	32	28	24	33	31	28	24	33	31	27	24	34	32	29	25
		kW	1.80	1.80	1.80	1.8	2.00	2.00	2.00	2.0	2.22	2.22	2.22	2.2	2.46	2.46	2.46	2.5	2.73	2.73	2.73	2.7	3.05	3.05	3.04	3.1
		Amps	6.3	6.3	6.3	6.4	7.2	7.2	7.2	7.3	8.3	8.3	8.2	8.3	9.4	9.4	9.3	9.4	10.6	10.6	10.6	10.6	12.0	12.0	12.0	12.1
	950	MBh	30.1	30.5	31.4	32.7	29.9	30.3	31.2	32.5	29.1	29.5	30.4	31.7	27.8	28.2	29.1	30.4	26.2	26.6	27.5	28.8	24.8	25.2	26.0	27.4
		S/T	1.00	0.92	0.79	0.7	1.00	0.93	0.80	0.7	1.00	0.95	0.82	0.7	1.00	0.97	0.84	0.7	1.00	1.00	0.86	0.7	1.00	1.00	0.91	0.8
		ΔT	33	31	27	23	32	31	27	23	33	31	27	23	32	31	27	23	32	30	27	23	33	31	28	24
		kW	1.81	1.81	1.81	1.82	2.01	2.01	2.00	2.02	2.23	2.23	2.23	2.24	2.47	2.47	2.47	2.48	2.74	2.74	2.73	2.75	3.05	3.05	3.05	3.06
		Amps	6.4	6.4	6.3	6.4	7.3	7.3	7.3	7.3	8.3	8.3	8.3	8.3	9.4	9.4	9.4	9.4	10.6	10.6	10.6	10.7	12.1	12.1	12.0	12.1
	1125	MBh	30.8	31.3	32.1	33.5	30.6	31.0	31.9	33.2	29.8	30.2	31.1	32.4	28.5	28.9	29.8	31.1	26.9	27.3	28.2	29.5	25.5	25.9	26.7	28.1
		S/T	1.00	0.97	0.83	0.7	1.00	0.97	0.84	0.7	1.00	1.00	0.86	0.7	1.00	1.00	0.88	0.7	1.00	1.00	0.90	0.8	1.00	1.00	0.95	0.8
		ΔT	31	29	25	22	31	29	25	22	31	29	26	22	31	29	25	22	31	29	25	21	32	30	26	23
		kW	1.82	1.82	1.82	1.8	2.02	2.02	2.02	2.0	2.24	2.24	2.24	2.3	2.48	2.48	2.48	2.5	2.75	2.75	2.75	2.8	3.07	3.07	3.06	3.1
		Amps	6.4	6.4	6.4	6.5	7.3	7.3	7.3	7.4	8.3	8.3	8.3	8.4	9.4	9.4	9.4	9.5	10.7	10.7	10.7	10.7	12.1	12.1	12.1	12.2

IDB: Entering Indoor Dry Bulb Temperature

Shaded area reflects AHRI conditions

kW = Total system power

High and low pressures are measured at the liquid and suction service valves.

Amps = outdoor unit amps (comp.+fan)

Expanded Cooling Data — GLXS4BA3610A*+ CAPTA3626A*

			Outdoor Ambient Temperature																							
			65				75				85				95				105				115			
			Entering Indoor Wet Bulb Temperature																							
IDB	Airflow		59	63	67	71	59	63	67	71	59	63	67	71	59	63	67	71	59	63	67	71	59	63	67	71
70	1050	MBh	35.0	35.5	36.5	-	34.6	35.1	36.2	-	33.7	34.2	35.3	-	32.2	32.7	33.7	-	30.3	30.8	31.8	-	28.5	29.0	30.1	-
		S/T	0.63	0.55	0.42	-	0.64	0.56	0.42	-	0.66	0.58	0.45	-	0.68	0.60	0.47	-	0.70	0.63	0.49	-	0.75	0.68	0.54	-
		ΔT	20	18	15	-	20	18	15	-	21	19	15	-	20	18	15	-	20	18	14	-	21	19	16	-
		kW	2.14	2.14	2.14	-	2.38	2.38	2.38	-	2.65	2.65	2.65	-	2.94	2.94	2.94	-	3.27	3.27	3.26	-	3.65	3.65	3.65	-
		Amps	7.5	7.5	7.5	-	8.6	8.6	8.6	-	9.8	9.8	9.8	-	11.2	11.2	11.1	-	12.7	12.7	12.6	-	14.4	14.4	14.4	-
	1138	MBh	35.3	35.7	36.8	-	34.9	35.4	36.5	-	34.0	34.5	35.6	-	32.5	33.0	34.0	-	30.6	31.0	32.1	-	28.8	29.3	30.3	-
		S/T	0.66	0.59	0.45	-	0.67	0.59	0.46	-	0.69	0.62	0.48	-	0.71	0.64	0.50	-	0.74	0.66	0.52	-	1.00	0.71	0.58	-
		ΔT	20	18	14	-	20	18	14	-	20	18	14	-	20	18	14	-	19	17	14	-	20	19	15	-
		kW	2.15	2.15	2.14	-	2.39	2.39	2.38	-	2.66	2.66	2.65	-	2.95	2.95	2.95	-	3.28	3.27	3.27	-	3.66	3.66	3.65	-
		Amps	7.5	7.5	7.5	-	8.6	8.6	8.6	-	9.9	9.9	9.8	-	11.2	11.2	11.2	-	12.7	12.7	12.7	-	14.5	14.4	14.4	-
	1350	MBh	36.1	36.6	37.6	-	35.8	36.3	37.3	-	34.9	35.4	36.4	-	33.3	33.8	34.9	-	31.4	31.9	32.9	-	29.7	30.2	31.2	-
		S/T	0.70	0.63	0.49	-	0.71	0.63	0.50	-	0.74	0.66	0.52	-	0.75	0.68	0.54	-	0.78	0.70	0.57	-	1.00	0.75	0.62	-
		ΔT	18	16	13	-	18	16	13	-	18	16	13	-	18	16	13	-	18	16	12	-	19	17	14	-
		kW	2.16	2.16	2.16	-	2.41	2.40	2.40	-	2.67	2.67	2.67	-	2.97	2.96	2.96	-	3.29	3.29	3.29	-	3.67	3.67	3.67	-
		Amps	7.6	7.6	7.6	-	8.7	8.7	8.7	-	9.9	9.9	9.9	-	11.3	11.3	11.3	-	12.8	12.8	12.7	-	14.5	14.5	14.5	-
75	1050	MBh	35.0	35.5	36.5	38.1	34.7	35.2	36.2	37.8	33.8	34.3	35.3	36.9	32.2	32.7	33.7	35.3	30.3	30.8	31.8	33.4	28.5	29.0	30.1	31.7
		S/T	0.76	0.68	0.55	0.4	0.76	0.69	0.55	0.4	0.79	0.71	0.58	0.4	0.81	0.73	0.60	0.5	1.00	0.75	0.62	0.5	1.00	0.81	0.67	0.5
		ΔT	25	23	19	15	24	23	19	15	25	23	19	16	24	23	19	15	24	22	19	15	25	23	20	16
		kW	2.14	2.14	2.13	2.2	2.38	2.38	2.38	2.4	2.65	2.65	2.64	2.7	2.94	2.94	2.94	3.0	3.27	3.27	3.26	3.3	3.65	3.65	3.64	3.7
		Amps	7.5	7.5	7.5	7.6	8.6	8.6	8.6	8.7	9.8	9.8	9.8	9.9	11.2	11.2	11.1	11.2	12.7	12.7	12.6	12.7	14.4	14.4	14.4	14.5
	1138	MBh	35.3	35.8	36.8	38.4	35.0	35.5	36.5	38.1	34.1	34.5	35.6	37.2	32.5	**33.0**	34.0	35.6	30.6	31.1	32.1	33.7	28.8	29.3	30.4	32.0
		S/T	0.79	0.72	0.58	0.4	0.80	0.72	0.59	0.4	0.82	0.75	0.61	0.5	0.84	**0.77**	0.63	0.5	1.00	0.79	0.65	0.5	1.00	0.84	0.70	0.6
		ΔT	24	22	18	15	24	22	18	15	24	22	19	15	24	**22**	18	15	23	22	18	14	25	23	19	15
		kW	2.15	2.15	2.14	2.16	2.39	2.39	2.38	2.40	2.66	2.66	2.65	2.67	2.95	**2.95**	2.94	2.96	3.28	3.27	3.27	3.29	3.66	3.66	3.65	3.67
		Amps	7.5	7.5	7.5	7.6	8.6	8.6	8.6	8.7	9.9	9.9	9.8	9.9	11.2	**11.2**	11.2	11.3	12.7	12.7	12.7	12.8	14.4	14.4	14.4	14.5
	1350	MBh	36.1	36.6	37.7	39.2	35.8	36.3	37.3	38.9	34.9	35.4	36.4	38.0	33.3	**33.8**	34.9	36.5	31.4	31.9	33.0	34.6	29.7	30.2	31.2	32.8
		S/T	0.83	0.76	0.62	0.5	0.84	0.76	0.63	0.5	0.86	0.79	0.65	0.5	1.00	**0.81**	0.67	0.5	1.00	0.83	0.69	0.6	1.00	0.88	0.75	0.6
		ΔT	22	20	17	13	22	20	17	13	23	21	17	13	22	**20**	17	13	22	20	17	13	23	21	18	14
		kW	2.16	2.16	2.16	2.2	2.40	2.40	2.40	2.4	2.67	2.67	2.67	2.7	2.96	**2.96**	2.96	3.0	3.29	3.29	3.28	3.3	3.67	3.67	3.67	3.7
		Amps	7.6	7.6	7.6	7.7	8.7	8.7	8.7	8.8	9.9	9.9	9.9	10.0	11.3	**11.3**	11.2	11.3	12.8	12.8	12.7	12.8	14.5	14.5	14.5	14.6

IDB: Entering Indoor Dry Bulb Temperature

Shaded area reflects ACCA (TVA) conditions

kW = Total system power

High and low pressures are measured at the liquid and suction service valves.

Amps = outdoor unit amps (comp.+fan)

Expanded Cooling Data — GLXS4BA3610A*+ CAPTA3626A* (cont.)

			Outdoor Ambient Temperature																							
			65				75				85				95				105				115			
			Entering Indoor Wet Bulb Temperature																							
IDB	Airflow		59	63	67	71	59	63	67	71	59	63	67	71	59	63	67	71	59	63	67	71	59	63	67	71
80	1050	MBh	35.2	35.7	36.7	38.3	34.8	35.3	36.4	38.0	33.9	34.4	35.5	37.1	32.4	32.9	33.9	35.5	30.5	31.0	32.0	33.6	28.7	29.2	30.3	31.8
		S/T	0.88	0.81	0.67	0.5	0.89	0.81	0.68	0.5	1.00	0.84	0.70	0.6	1.00	0.86	0.72	0.6	1.00	0.88	0.74	0.6	1.00	0.93	0.80	0.7
		ΔT	29	27	23	20	29	27	23	19	29	27	23	20	29	27	23	19	28	27	23	19	30	28	24	20
		kW	2.14	2.14	2.14	2.2	2.38	2.38	2.38	2.4	2.65	2.65	2.65	2.7	2.94	2.94	2.94	3.0	3.27	3.27	3.26	3.3	3.65	3.65	3.65	3.7
		Amps	7.5	7.5	7.5	7.6	8.6	8.6	8.6	8.7	9.8	9.8	9.8	9.9	11.2	11.2	11.1	11.2	12.7	12.7	12.6	12.7	14.4	14.4	14.4	14.5
	1138	MBh	35.5	35.9	37.0	38.6	35.1	35.6	36.7	38.3	34.2	34.7	35.8	37.4	32.7	33.2	**34.2**	35.8	30.8	31.2	32.3	33.9	29.0	29.5	30.5	32.1
		S/T	0.92	0.84	0.71	0.6	0.92	0.85	0.71	0.6	1.00	0.87	0.74	0.6	1.00	0.89	**0.76**	0.6	1.00	0.91	0.78	0.6	1.00	0.96	0.83	0.7
		ΔT	28	26	23	19	28	26	23	19	28	26	23	19	28	26	**22**	19	28	26	22	19	29	27	23	20
		kW	2.15	2.15	2.14	2.16	2.39	2.39	2.38	2.40	2.66	2.66	2.65	2.67	2.95	2.95	**2.94**	2.96	3.28	3.27	3.27	3.29	3.66	3.66	3.65	3.67
		Amps	7.5	7.5	7.5	7.6	8.6	8.6	8.6	8.7	9.9	9.9	9.8	9.9	11.2	11.2	**11.2**	11.3	12.7	12.7	12.7	12.8	14.4	14.4	14.4	14.5
	1350	MBh	36.3	36.8	37.8	39.4	36.0	36.5	37.5	39.1	35.1	35.6	36.6	38.2	33.5	34.0	35.1	36.6	31.6	32.1	33.1	34.7	29.9	30.4	31.4	33.0
		S/T	0.96	0.88	0.75	0.6	1.00	0.89	0.75	0.6	1.00	0.91	0.78	0.6	1.00	0.93	0.80	0.7	1.00	0.95	0.82	0.7	1.00	1.00	0.87	0.7
		ΔT	27	25	21	17	27	25	21	17	27	25	21	18	27	25	21	17	26	24	21	17	28	26	22	18
		kW	2.16	2.16	2.16	2.2	2.41	2.40	2.40	2.4	2.67	2.67	2.67	2.7	2.97	2.96	2.96	3.0	3.29	3.29	3.29	3.3	3.67	3.67	3.67	3.7
		Amps	7.6	7.6	7.6	7.7	8.7	8.7	8.7	8.8	9.9	9.9	9.9	10.0	11.3	11.3	11.3	11.3	12.8	12.8	12.7	12.8	14.5	14.5	14.5	14.6
85	1050	MBh	35.7	36.2	37.3	38.9	35.4	35.9	37.0	38.6	34.5	35.0	36.1	37.6	33.0	**33.5**	34.5	36.1	31.1	31.5	32.6	34.2	29.3	29.8	30.8	32.4
		S/T	1.00	0.91	0.77	0.6	1.00	0.91	0.78	0.6	1.00	0.94	0.80	0.7	1.00	**0.96**	0.82	0.7	1.00	1.00	0.84	0.7	1.00	1.00	0.90	0.8
		ΔT	33	31	27	23	32	31	27	23	33	31	27	24	32	**31**	27	23	32	30	27	23	33	31	28	24
		kW	2.15	2.14	2.14	2.2	2.39	2.39	2.38	2.4	2.66	2.65	2.65	2.7	2.95	**2.95**	2.94	3.0	3.27	3.27	3.27	3.3	3.66	3.65	3.65	3.7
		Amps	7.5	7.5	7.5	7.6	8.6	8.6	8.6	8.7	9.9	9.9	9.8	9.9	11.2	**11.2**	11.2	11.3	12.7	12.7	12.7	12.7	14.4	14.4	14.4	14.5
	1138	MBh	36.0	36.5	37.6	39.2	35.7	36.2	37.3	38.8	34.8	35.3	36.3	37.9	33.3	33.7	34.8	36.4	31.3	31.8	32.9	34.5	29.6	30.1	31.1	32.7
		S/T	1.00	0.94	0.81	0.7	1.00	0.95	0.81	0.7	1.00	0.97	0.84	0.7	1.00	1.00	0.86	0.7	1.00	1.00	0.88	0.7	1.00	1.00	0.93	0.8
		ΔT	32	30	26	23	32	30	26	23	32	30	27	23	32	30	26	23	32	30	26	22	33	31	27	23
		kW	2.15	2.15	2.15	2.17	2.39	2.39	2.39	2.41	2.66	2.66	2.66	2.68	2.96	2.95	2.95	2.97	3.28	3.28	3.28	3.29	3.66	3.66	3.66	3.68
		Amps	7.6	7.6	7.5	7.6	8.7	8.7	8.6	8.7	9.9	9.9	9.9	10.0	11.2	11.2	11.2	11.3	12.7	12.7	12.7	12.8	14.5	14.5	14.4	14.5
	1350	MBh	36.9	37.4	38.4	40.0	36.6	37.1	38.1	39.7	35.7	36.2	37.2	38.8	34.1	**34.6**	35.6	37.2	32.2	32.7	33.7	35.3	30.5	30.9	32.0	33.6
		S/T	1.00	0.98	0.85	0.7	1.00	0.99	0.85	0.7	1.00	1.00	0.88	0.7	1.00	**1.00**	0.90	0.8	1.00	1.00	0.92	0.8	1.00	1.00	0.97	0.8
		ΔT	30	29	25	21	30	28	25	21	31	29	25	21	30	**28**	25	21	30	28	25	21	31	29	26	22
		kW	2.17	2.17	2.16	2.2	2.41	2.41	2.40	2.4	2.68	2.68	2.67	2.7	2.97	**2.97**	2.96	3.0	3.30	3.29	3.29	3.3	3.68	3.68	3.67	3.7
		Amps	7.6	7.6	7.6	7.7	8.7	8.7	8.7	8.8	10.0	10.0	9.9	10.0	11.3	**11.3**	11.3	11.4	12.8	12.8	12.8	12.8	14.5	14.5	14.5	14.6

IDB: Entering Indoor Dry Bulb Temperature

Shaded area reflects AHRI conditions

kW = Total system power

High and low pressures are measured at the liquid and suction service valves.

Amps = outdoor unit amps (comp.+fan)

Expanded Cooling Data — GLXS4BA4210A*+ CAPTA4230A*

			Outdoor Ambient Temperature																							
			65				75				85				95				105				115			
			Entering Indoor Wet Bulb Temperature																							
IDB	Airflow		59	63	67	71	59	63	67	71	59	63	67	71	59	63	67	71	59	63	67	71	59	63	67	71
70	1225	MBh	40.6	41.2	42.4	-	40.2	40.8	42.0	-	39.2	39.8	41.0	-	37.4	37.9	39.1	-	35.1	35.7	36.9	-	33.1	33.7	34.9	-
		S/T	0.60	0.53	0.39	-	0.61	0.53	0.39	-	0.63	0.56	0.42	-	0.65	0.58	0.44	-	0.68	0.60	0.46	-	0.73	0.65	0.51	-
		ΔT	20	18	15	-	20	18	15	-	20	19	15	-	20	18	15	-	20	18	15	-	21	19	16	-
		kW	2.51	2.51	2.50	-	2.79	2.79	2.78	-	3.10	3.10	3.09	-	3.43	3.43	3.43	-	3.81	3.81	3.80	-	4.25	4.25	4.24	-
		Amps	8.6	8.6	8.6	-	9.9	9.9	9.8	-	11.3	11.3	11.3	-	12.8	12.8	12.8	-	14.5	14.5	14.5	-	16.5	16.5	16.5	-
	1435	MBh	41.2	41.8	43.0	-	40.9	41.4	42.7	-	39.8	40.4	41.6	-	38.0	38.5	39.8	-	35.7	36.3	37.5	-	33.7	34.3	35.5	-
		S/T	0.68	0.60	0.46	-	0.68	0.61	0.47	-	0.71	0.63	0.49	-	0.73	0.65	0.51	-	0.75	0.67	0.54	-	1.00	0.73	0.59	-
		ΔT	19	17	14	-	19	17	13	-	19	17	14	-	19	17	13	-	19	17	13	-	20	18	14	-
		kW	2.53	2.53	2.52	-	2.81	2.80	2.80	-	3.12	3.11	3.11	-	3.45	3.45	3.44	-	3.83	3.82	3.82	-	4.27	4.26	4.26	-
		Amps	8.7	8.7	8.6	-	9.9	9.9	9.9	-	11.4	11.4	11.3	-	12.9	12.9	12.9	-	14.6	14.6	14.6	-	16.6	16.6	16.6	-
	1575	MBh	41.7	42.3	43.5	-	41.4	41.9	43.1	-	40.3	40.9	42.1	-	38.5	39.0	40.3	-	36.2	36.8	38.0	-	34.2	34.8	36.0	-
		S/T	0.71	0.63	0.49	-	0.71	0.63	0.50	-	0.74	0.66	0.52	-	0.76	0.68	0.54	-	0.78	0.70	0.56	-	1.00	0.75	0.62	-
		ΔT	18	16	13	-	18	16	13	-	18	16	13	-	18	16	13	-	18	16	12	-	19	17	14	-
		kW	2.54	2.54	2.53	-	2.82	2.81	2.81	-	3.13	3.12	3.12	-	3.46	3.46	3.45	-	3.84	3.83	3.83	-	4.27	4.27	4.27	-
		Amps	8.7	8.7	8.7	-	10.0	10.0	10.0	-	11.4	11.4	11.4	-	12.9	12.9	12.9	-	14.7	14.6	14.6	-	16.7	16.7	16.6	-
75	1225	MBh	40.6	41.2	42.4	44.3	40.3	40.8	42.1	43.9	39.2	39.8	41.0	42.9	37.4	38.0	39.2	41.0	35.1	35.7	36.9	38.8	33.1	33.7	34.9	36.8
		S/T	0.73	0.66	0.52	0.4	0.74	0.66	0.52	0.4	0.77	0.69	0.55	0.4	0.79	0.71	0.57	0.4	1.00	0.73	0.59	0.4	1.00	0.78	0.64	0.5
		ΔT	24	22	19	15	24	22	19	15	24	23	19	16	24	22	19	15	24	22	19	15	25	23	20	16
		kW	2.51	2.51	2.50	2.5	2.79	2.78	2.78	2.8	3.10	3.09	3.09	3.1	3.43	3.43	3.43	3.4	3.81	3.80	3.80	3.8	4.25	4.24	4.24	4.3
		Amps	8.6	8.6	8.6	8.7	9.9	9.9	9.8	9.9	11.3	11.3	11.2	11.3	12.8	12.8	12.8	12.9	14.5	14.5	14.5	14.6	16.5	16.5	16.5	16.6
	1435	MBh	41.3	41.8	43.0	44.9	40.9	41.5	42.7	44.5	39.8	40.4	41.6	43.5	38.0	**38.6**	39.8	41.6	35.8	36.3	37.6	39.4	33.7	34.3	35.5	37.4
		S/T	0.81	0.73	0.59	0.4	0.81	0.74	0.60	0.5	0.84	0.76	0.62	0.5	0.86	**0.78**	0.64	0.5	1.00	0.80	0.67	0.5	1.00	0.86	0.72	0.6
		ΔT	23	21	18	14	23	21	18	14	23	21	18	14	23	**21**	18	14	23	21	17	14	24	22	18	15
		kW	2.53	2.52	2.52	2.54	2.80	2.80	2.80	2.82	3.11	3.11	3.11	3.13	3.45	**3.45**	3.44	3.46	3.82	3.82	3.82	3.84	4.26	4.26	4.26	4.28
		Amps	8.7	8.7	8.6	8.7	9.9	9.9	9.9	10.0	11.4	11.3	11.3	11.4	12.9	**12.9**	12.9	13.0	14.6	14.6	14.6	14.7	16.6	16.6	16.6	16.7
	1575	MBh	41.7	42.3	43.5	45.4	41.4	42.0	43.2	45.0	40.3	40.9	42.1	44.0	38.5	**39.1**	40.3	42.1	36.3	36.8	38.0	39.9	34.2	34.8	36.0	37.9
		S/T	0.84	0.76	0.62	0.5	0.84	0.77	0.63	0.5	0.87	0.79	0.65	0.5	1.00	**0.81**	0.67	0.5	1.00	0.83	0.70	0.6	1.00	0.89	0.75	0.6
		ΔT	22	20	17	13	22	20	17	13	22	21	17	13	22	**20**	17	13	22	20	17	13	23	21	18	14
		kW	2.54	2.53	2.53	2.6	2.81	2.81	2.81	2.8	3.12	3.12	3.12	3.1	3.46	**3.46**	3.45	3.5	3.83	3.83	3.83	3.8	4.27	4.27	4.27	4.3
		Amps	8.7	8.7	8.7	8.8	10.0	10.0	10.0	10.0	11.4	11.4	11.4	11.5	12.9	**12.9**	12.9	13.0	14.6	14.6	14.6	14.7	16.7	16.7	16.6	16.7

IDB: Entering Indoor Dry Bulb Temperature

Shaded area reflects ACCA (TVA) conditions

kW = Total system power

High and low pressures are measured at the liquid and suction service valves.

Amps = outdoor unit amps (comp.+fan)

Expanded Cooling Data — GLXS4BA4210A+ CAPTA4230A* (cont.)*

			Outdoor Ambient Temperature																							
			65				75				85				95				105				115			
			Entering Indoor Wet Bulb Temperature																							
IDB	Airflow		59	63	67	71	59	63	67	71	59	63	67	71	59	63	67	71	59	63	67	71	59	63	67	71
80	1225	MBh	40.8	41.4	42.6	44.5	40.5	41.1	42.3	44.1	39.4	40.0	41.2	43.1	37.6	38.2	39.4	41.2	35.4	35.9	37.1	39.0	33.3	33.9	35.1	37.0
		S/T	0.86	0.78	0.65	0.5	0.87	0.79	0.65	0.5	1.00	0.82	0.68	0.5	1.00	0.84	0.70	0.6	1.00	0.86	0.72	0.6	1.00	0.91	0.77	0.6
		ΔT	28	26	23	19	28	26	23	19	29	27	23	20	28	26	23	19	28	26	23	19	29	27	24	20
		kW	2.51	2.51	2.50	2.5	2.79	2.79	2.78	2.8	3.10	3.10	3.09	3.1	3.43	3.43	3.43	3.4	3.81	3.81	3.80	3.8	4.25	4.25	4.24	4.3
		Amps	8.6	8.6	8.6	8.7	9.9	9.9	9.8	9.9	11.3	11.3	11.3	11.4	12.8	12.8	12.8	12.9	14.5	14.5	14.5	14.6	16.5	16.5	16.5	16.6
	1435	MBh	41.5	42.0	43.3	45.1	41.1	41.7	42.9	44.7	40.0	40.6	41.8	43.7	38.2	38.8	**40.0**	41.9	36.0	36.5	37.8	39.6	33.9	34.5	35.7	37.6
		S/T	0.94	0.86	0.72	0.6	0.94	0.86	0.73	0.6	1.00	0.89	0.75	0.6	1.00	0.91	**0.77**	0.6	1.00	0.93	0.79	0.6	1.00	1.00	0.85	0.7
		ΔT	27	25	22	18	27	25	22	18	27	25	22	18	27	25	**22**	18	27	25	21	18	28	26	23	19
		kW	2.53	2.53	2.52	2.54	2.81	2.80	2.80	2.82	3.12	3.11	3.11	3.13	3.45	3.45	**3.44**	3.47	3.83	3.82	3.82	3.84	4.26	4.26	4.26	4.28
		Amps	8.7	8.7	8.6	8.7	9.9	9.9	9.9	10.0	11.4	11.4	11.3	11.4	12.9	12.9	**12.9**	13.0	14.6	14.6	14.6	14.7	16.6	16.6	16.6	16.7
	1575	MBh	42.0	42.5	43.7	45.6	41.6	42.2	43.4	45.2	40.5	41.1	42.3	44.2	38.7	39.3	40.5	42.3	36.5	37.0	38.3	40.1	34.4	35.0	36.2	38.1
		S/T	0.96	0.89	0.75	0.6	1.00	0.89	0.76	0.6	1.00	0.92	0.78	0.6	1.00	0.94	0.80	0.7	1.00	0.96	0.82	0.7	1.00	1.00	0.88	0.7
		ΔT	26	24	21	17	26	24	21	17	26	25	21	18	26	24	21	17	26	24	21	17	27	25	22	18
		kW	2.54	2.54	2.53	2.6	2.82	2.81	2.81	2.8	3.13	3.12	3.12	3.1	3.46	3.46	3.45	3.5	3.83	3.83	3.83	3.8	4.27	4.27	4.27	4.3
		Amps	8.7	8.7	8.7	8.8	10.0	10.0	10.0	10.1	11.4	11.4	11.4	11.5	12.9	12.9	12.9	13.0	14.7	14.6	14.6	14.7	16.7	16.7	16.6	16.7
85	1225	MBh	41.5	42.1	43.3	45.2	41.2	41.7	43.0	44.8	40.1	40.7	41.9	43.8	38.3	38.9	40.1	41.9	36.0	36.6	37.8	39.7	34.0	34.6	35.8	37.7
		S/T	1.00	0.89	0.75	0.6	1.00	0.89	0.76	0.6	1.00	0.92	0.78	0.6	1.00	0.94	0.80	0.7	1.00	1.00	0.82	0.7	1.00	1.00	0.88	0.7
		ΔT	32	30	27	23	32	30	27	23	32	30	27	23	32	30	27	23	32	30	26	23	33	31	27	24
		kW	2.52	2.51	2.51	2.5	2.79	2.79	2.79	2.8	3.10	3.10	3.10	3.1	3.44	3.44	3.43	3.5	3.81	3.81	3.81	3.8	4.25	4.25	4.25	4.3
		Amps	8.6	8.6	8.6	8.7	9.9	9.9	9.9	10.0	11.3	11.3	11.3	11.4	12.8	12.8	12.8	12.9	14.6	14.5	14.5	14.6	16.6	16.6	16.5	16.6
	1435	MBh	42.2	42.7	43.9	45.8	41.8	42.4	43.6	45.4	40.7	41.3	42.5	44.4	38.9	39.5	40.7	42.5	36.7	37.2	38.5	40.3	34.6	35.2	36.4	38.3
		S/T	1.00	0.96	0.82	0.7	1.00	0.97	0.83	0.7	1.00	0.99	0.86	0.7	1.00	1.00	0.87	0.7	1.00	1.00	0.90	0.8	1.00	1.00	0.95	0.8
		ΔT	31	29	25	22	31	29	25	22	31	29	26	22	31	29	25	22	30	28	25	21	31	30	26	23
		kW	2.53	2.53	2.53	2.55	2.81	2.81	2.80	2.83	3.12	3.12	3.11	3.14	3.46	3.45	3.45	3.47	3.83	3.83	3.82	3.84	4.27	4.27	4.26	4.28
		Amps	8.7	8.7	8.7	8.8	10.0	10.0	9.9	10.0	11.4	11.4	11.4	11.5	12.9	12.9	12.9	13.0	14.6	14.6	14.6	14.7	16.6	16.6	16.6	16.7
	1575	MBh	42.6	43.2	44.4	46.3	42.3	42.9	44.1	45.9	41.2	41.8	43.0	44.9	39.4	40.0	41.2	43.0	37.2	37.7	38.9	40.8	35.1	35.7	36.9	38.8
		S/T	1.00	0.99	0.85	0.7	1.00	1.00	0.86	0.7	1.00	1.00	0.88	0.7	1.00	1.00	0.90	0.8	1.00	1.00	0.93	0.8	1.00	1.00	0.98	0.8
		ΔT	30	28	25	21	30	28	25	21	30	28	25	21	30	28	24	21	30	28	24	21	31	29	25	22
		kW	2.54	2.54	2.54	2.6	2.82	2.82	2.81	2.8	3.13	3.13	3.12	3.1	3.47	3.46	3.46	3.5	3.84	3.84	3.83	3.9	4.28	4.28	4.27	4.3
		Amps	8.7	8.7	8.7	8.8	10.0	10.0	10.0	10.1	11.4	11.4	11.4	11.5	13.0	13.0	12.9	13.0	14.7	14.7	14.6	14.7	16.7	16.7	16.7	16.8

IDB: Entering Indoor Dry Bulb Temperature

Shaded area reflects AHRI conditions

kW = Total system power

High and low pressures are measured at the liquid and suction service valves.

Amps = outdoor unit amps (comp.+fan)

			Outdoor Ambient Temperature																							
			65				75				85				95				105				115			
			Entering Indoor Wet Bulb Temperature																							
IDB	Airflow		59	63	67	71	59	63	67	71	59	63	67	71	59	63	67	71	59	63	67	71	59	63	67	71
70	1400	MBh	46.9	47.6	48.9	-	46.5	47.1	48.5	-	45.3	45.9	47.3	-	43.2	43.9	45.2	-	40.7	41.3	42.7	-	38.3	39.0	40.4	-
		S/T	0.63	0.56	0.43	-	0.64	0.57	0.44	-	0.66	0.59	0.46	-	0.68	0.61	0.48	-	0.70	0.63	0.50	-	0.75	0.68	0.55	-
		ΔT	20	18	14	-	20	18	14	-	20	18	15	-	20	18	14	-	20	18	14	-	21	19	15	-
		kW	2.84	2.84	2.83	-	3.17	3.16	3.16	-	3.53	3.53	3.52	-	3.93	3.92	3.92	-	4.37	4.37	4.36	-	4.89	4.88	4.88	-
		Amps	10.2	10.2	10.1	-	11.7	11.7	11.6	-	13.3	13.3	13.3	-	15.1	15.1	15.1	-	17.2	17.2	17.1	-	19.5	19.5	19.5	-
	1600	MBh	47.7	48.4	49.8	-	47.3	48.0	49.4	-	46.1	46.8	48.2	-	44.0	44.7	46.1	-	41.5	42.2	43.5	-	39.2	39.8	41.2	-
		S/T	0.67	0.60	0.47	-	0.68	0.60	0.47	-	0.70	0.63	0.50	-	0.72	0.65	0.52	-	0.74	0.67	0.54	-	0.79	0.72	0.59	-
		ΔT	19	17	13	-	19	17	13	-	19	17	14	-	19	17	13	-	19	17	13	-	20	18	14	-
		kW	2.85	2.85	2.85	-	3.18	3.18	3.17	-	3.55	3.54	3.54	-	3.94	3.94	3.93	-	4.39	4.38	4.38	-	4.90	4.90	4.90	-
		Amps	10.2	10.2	10.2	-	11.7	11.7	11.7	-	13.4	13.4	13.4	-	15.2	15.2	15.2	-	17.2	17.2	17.2	-	19.6	19.6	19.6	-
	1800	MBh	48.8	49.4	50.8	-	48.4	49.0	50.4	-	47.2	47.8	49.2	-	45.1	45.7	47.1	-	42.5	43.2	44.6	-	40.2	40.9	42.3	-
		S/T	0.68	0.60	0.48	-	0.68	0.61	0.48	-	0.71	0.63	0.50	-	0.73	0.65	0.52	-	0.75	0.67	0.54	-	1.00	0.72	0.59	-
		ΔT	18	16	12	-	18	16	12	-	18	16	13	-	18	16	12	-	18	16	12	-	19	17	13	-
		kW	2.87	2.87	2.86	-	3.20	3.19	3.19	-	3.56	3.56	3.55	-	3.96	3.95	3.95	-	4.40	4.40	4.39	-	4.92	4.92	4.91	-
		Amps	10.3	10.3	10.3	-	11.8	11.8	11.8	-	13.5	13.5	13.4	-	15.3	15.3	15.2	-	17.3	17.3	17.3	-	19.7	19.7	19.6	-
75	1400	MBh	46.9	47.6	49.0	51.1	46.5	47.2	48.5	50.7	45.3	46.0	47.3	49.5	43.2	43.9	45.3	47.4	40.7	41.3	42.7	44.8	38.4	39.0	40.4	42.5
		S/T	0.76	0.68	0.56	0.4	0.76	0.69	0.56	0.4	0.79	0.71	0.59	0.4	0.81	0.73	0.60	0.5	1.00	0.75	0.63	0.5	1.00	0.80	0.67	0.5
		ΔT	24	22	19	15	24	22	19	15	25	23	19	15	24	22	19	15	24	22	18	15	25	23	20	16
		kW	2.84	2.83	2.83	2.9	3.16	3.16	3.16	3.2	3.53	3.53	3.52	3.5	3.92	3.92	3.92	3.9	4.37	4.36	4.36	4.4	4.89	4.88	4.88	4.9
		Amps	10.2	10.1	10.1	10.2	11.7	11.6	11.6	11.7	13.3	13.3	13.3	13.4	15.1	15.1	15.1	15.2	17.2	17.2	17.1	17.2	19.5	19.5	19.5	19.6
	1600	MBh	47.8	48.4	49.8	51.9	47.4	48.0	49.4	51.5	46.1	46.8	48.2	50.3	44.1	**44.7**	46.1	48.2	41.5	42.2	43.6	45.7	39.2	39.9	41.2	43.4
		S/T	0.79	0.72	0.59	0.5	0.80	0.73	0.60	0.5	0.82	0.75	0.62	0.5	0.84	**0.77**	0.64	0.5	1.00	0.79	0.66	0.5	1.00	0.84	0.71	0.6
		ΔT	23	21	18	14	23	21	18	14	24	22	18	14	23	**21**	18	14	23	21	17	14	24	22	19	15
		kW	2.85	2.85	2.84	2.87	3.18	3.18	3.17	3.20	3.55	3.54	3.54	3.56	3.94	**3.94**	3.93	3.96	4.38	4.38	4.37	4.40	4.90	4.90	4.89	4.92
		Amps	10.2	10.2	10.2	10.3	11.7	11.7	11.7	11.8	13.4	13.4	13.4	13.5	15.2	**15.2**	15.2	15.3	17.2	17.2	17.2	17.3	19.6	19.6	19.6	19.7
	1800	MBh	48.8	49.5	50.9	53.0	48.4	49.1	50.4	52.5	47.2	47.8	49.2	51.3	45.1	**45.8**	47.1	49.3	42.6	43.2	44.6	46.7	40.2	40.9	42.3	44.4
		S/T	0.80	0.73	0.60	0.5	0.81	0.73	0.60	0.5	0.83	0.76	0.63	0.5	0.85	**0.78**	0.65	0.5	1.00	0.80	0.67	0.5	1.00	0.85	0.72	0.6
		ΔT	22	20	17	13	22	20	17	13	23	21	17	13	22	**20**	17	13	22	20	16	13	23	21	18	14
		kW	2.87	2.86	2.86	2.9	3.19	3.19	3.19	3.2	3.56	3.56	3.55	3.6	3.96	**3.95**	3.95	4.0	4.40	4.39	4.39	4.4	4.92	4.91	4.91	4.9
		Amps	10.3	10.3	10.3	10.4	11.8	11.8	11.8	11.9	13.5	13.5	13.4	13.5	15.3	**15.3**	15.2	15.4	17.3	17.3	17.3	17.4	19.7	19.7	19.6	19.8

IDB: Entering Indoor Dry Bulb Temperature

Shaded area reflects ACCA (TVA) conditions

kW = Total system power

High and low pressures are measured at the liquid and suction service valves.

Amps = outdoor unit amps (comp.+fan)

EXPANDED COOLING DATA — GLXS4BA4810A*+ CAPTA6030A* (CONT.)

			Outdoor Ambient Temperature																							
			65				75				85				95				105				115			
			Entering Indoor Wet Bulb Temperature																							
IDB	Airflow		59	63	67	71	59	63	67	71	59	63	67	71	59	63	67	71	59	63	67	71	59	63	67	71
80	1400	MBh	47.2	47.8	49.2	51.3	46.8	47.4	48.8	50.9	45.5	46.2	47.6	49.7	43.5	44.1	45.5	47.6	40.9	41.6	43.0	45.1	38.6	39.3	40.6	42.8
		S/T	0.88	0.80	0.68	0.5	0.88	0.81	0.68	0.5	1.00	0.83	0.70	0.6	1.00	0.85	0.72	0.6	1.00	0.87	0.74	0.6	1.00	0.92	0.79	0.7
		ΔT	29	27	23	19	29	27	23	19	29	27	23	20	29	27	23	19	28	26	23	19	30	28	24	20
		kW	2.84	2.84	2.83	2.9	3.17	3.16	3.16	3.2	3.53	3.53	3.52	3.5	3.93	3.92	3.92	3.9	4.37	4.37	4.36	4.4	4.89	4.88	4.88	4.9
		Amps	10.2	10.2	10.1	10.2	11.7	11.7	11.6	11.7	13.3	13.3	13.3	13.4	15.1	15.1	15.1	15.2	17.2	17.2	17.1	17.2	19.5	19.5	19.5	19.6
	1600	MBh	48.0	48.7	50.0	52.2	47.6	48.3	49.6	51.7	46.4	47.0	48.4	50.5	44.3	45.0	**46.3**	48.5	41.8	42.4	43.8	45.9	39.4	40.1	41.5	43.6
		S/T	0.91	0.84	0.71	0.6	0.92	0.85	0.72	0.6	1.00	0.87	0.74	0.6	1.00	0.89	**0.76**	0.6	1.00	0.91	0.78	0.6	1.00	0.96	0.83	0.7
		ΔT	28	26	22	18	28	26	22	18	28	26	22	18	28	26	**22**	18	27	25	22	18	29	27	23	19
		kW	2.85	2.85	2.85	2.87	3.18	3.18	3.17	3.20	3.55	3.54	3.54	3.56	3.94	3.94	**3.93**	3.96	4.38	4.38	4.38	4.40	4.90	4.90	4.90	4.92
		Amps	10.2	10.2	10.2	10.3	11.7	11.7	11.7	11.8	13.4	13.4	13.4	13.5	15.2	15.2	**15.2**	15.3	17.2	17.2	17.2	17.3	19.6	19.6	19.6	19.7
	1800	MBh	49.1	49.7	51.1	53.2	48.6	49.3	50.7	52.8	47.4	48.1	49.5	51.6	45.4	46.0	47.4	49.5	42.8	43.5	44.8	47.0	40.5	41.1	42.5	44.6
		S/T	0.92	0.85	0.72	0.6	1.00	0.85	0.72	0.6	1.00	0.88	0.75	0.6	1.00	0.90	0.77	0.6	1.00	0.92	0.79	0.7	1.00	1.00	0.84	0.7
		ΔT	27	25	21	17	27	25	21	17	27	25	21	17	27	25	21	17	26	24	21	17	28	26	22	18
		kW	2.87	2.87	2.86	2.9	3.20	3.19	3.19	3.2	3.56	3.56	3.55	3.6	3.96	3.95	3.95	4.0	4.40	4.40	4.39	4.4	4.92	4.91	4.91	4.9
		Amps	10.3	10.3	10.3	10.4	11.8	11.8	11.8	11.9	13.5	13.5	13.4	13.6	15.3	15.3	15.2	15.4	17.3	17.3	17.3	17.4	19.7	19.7	19.6	19.8
85	1400	MBh	47.9	48.6	50.0	52.1	47.5	48.2	49.6	51.7	46.3	47.0	48.4	50.5	44.2	44.9	46.3	48.4	41.7	42.4	43.7	45.9	39.4	40.0	41.4	43.5
		S/T	1.00	0.90	0.77	0.6	1.00	0.91	0.78	0.6	1.00	0.93	0.80	0.7	1.00	0.95	0.82	0.7	1.00	1.00	0.84	0.7	1.00	1.00	0.89	0.8
		ΔT	33	31	27	23	33	31	27	23	33	31	27	23	33	31	27	23	32	30	27	23	34	32	28	24
		kW	2.84	2.84	2.84	2.9	3.17	3.17	3.16	3.2	3.54	3.53	3.53	3.6	3.93	3.93	3.92	3.9	4.37	4.37	4.37	4.4	4.89	4.89	4.89	4.9
		Amps	10.2	10.2	10.2	10.3	11.7	11.7	11.7	11.8	13.4	13.4	13.3	13.4	15.2	15.2	15.1	15.3	17.2	17.2	17.2	17.3	19.6	19.6	19.5	19.6
	1600	MBh	48.8	49.4	50.8	52.9	48.4	49.0	50.4	52.5	47.2	47.8	49.2	51.3	45.1	45.7	47.1	49.2	42.5	43.2	44.6	46.7	40.2	40.9	42.3	44.4
		S/T	1.00	0.94	0.81	0.7	1.00	0.94	0.81	0.7	1.00	0.97	0.84	0.7	1.00	0.98	0.86	0.7	1.00	1.00	0.88	0.7	1.00	1.00	0.93	0.8
		ΔT	32	30	26	22	31	30	26	22	32	30	26	22	31	29	26	22	31	29	26	22	32	30	27	23
		kW	2.86	2.86	2.85	2.88	3.19	3.19	3.18	3.20	3.55	3.55	3.55	3.57	3.95	3.95	3.94	3.97	4.39	4.39	4.38	4.41	4.91	4.91	4.90	4.93
		Amps	10.3	10.3	10.2	10.3	11.8	11.8	11.7	11.8	13.4	13.4	13.4	13.5	15.2	15.2	15.2	15.3	17.3	17.3	17.2	17.3	19.6	19.6	19.6	19.7
	1800	MBh	49.8	50.5	51.9	54.0	49.4	50.1	51.5	53.6	48.2	48.9	50.2	52.4	46.1	46.8	48.2	50.3	43.6	44.2	45.6	47.7	41.3	41.9	43.3	45.4
		S/T	1.00	0.94	0.81	0.7	1.00	0.95	0.82	0.7	1.00	0.97	0.84	0.7	1.00	1.00	0.86	0.7	1.00	1.00	0.88	0.7	1.00	1.00	0.93	0.8
		ΔT	31	29	25	21	30	29	25	21	31	29	25	21	30	28	25	21	30	28	25	21	31	29	26	22
		kW	2.87	2.87	2.87	2.9	3.20	3.20	3.19	3.2	3.57	3.56	3.56	3.6	3.96	3.96	3.95	4.0	4.41	4.40	4.40	4.4	4.92	4.92	4.92	4.9
		Amps	10.3	10.3	10.3	10.4	11.8	11.8	11.8	11.9	13.5	13.5	13.5	13.6	15.3	15.3	15.3	15.4	17.3	17.3	17.3	17.4	19.7	19.7	19.7	19.8

IDB: Entering Indoor Dry Bulb Temperature

Shaded area reflects AHRI conditions

kW = Total system power

High and low pressures are measured at the liquid and suction service valves.

Amps = outdoor unit amps (comp.+fan)

Expanded Cooling Data — GLXS4BA6010A*+ CAPTA6030A*

			Outdoor Ambient Temperature																							
			65				75				85				95				105				115			
			Entering Indoor Wet Bulb Temperature																							
IDB	Airflow		59	63	67	71	59	63	67	71	59	63	67	71	59	63	67	71	59	63	67	71	59	63	67	71
70	1500	MBh	58.8	59.6	61.3	-	58.2	59.1	60.8	-	56.7	57.5	59.3	-	54.1	54.9	56.7	-	50.9	51.7	53.5	-	48.0	48.8	50.6	-
		S/T	0.60	0.53	0.41	-	0.61	0.54	0.41	-	0.63	0.56	0.44	-	0.65	0.58	0.46	-	0.67	0.60	0.48	-	0.71	0.64	0.52	-
		ΔT	22	20	16	-	22	20	16	-	22	20	16	-	22	20	16	-	22	19	15	-	23	21	17	-
		kW	3.66	3.65	3.65	-	4.10	4.10	4.09	-	4.60	4.60	4.59	-	5.14	5.14	5.13	-	5.74	5.74	5.73	-	6.45	6.45	6.44	-
		Amps	13.7	13.7	13.7	-	15.8	15.7	15.7	-	18.0	18.0	18.0	-	20.5	20.5	20.4	-	23.3	23.2	23.2	-	26.5	26.5	26.4	-
	2000	MBh	61.6	62.4	64.2	-	61.1	61.9	63.6	-	59.6	60.4	62.1	-	57.0	57.8	59.5	-	53.8	54.6	56.3	-	50.9	51.7	53.4	-
		S/T	0.64	0.57	0.45	-	0.64	0.57	0.45	-	0.67	0.60	0.47	-	0.68	0.61	0.49	-	0.70	0.63	0.51	-	0.75	0.68	0.56	-
		ΔT	19	17	13	-	19	17	13	-	19	17	13	-	19	17	13	-	19	17	13	-	20	18	14	-
		kW	3.70	3.70	3.69	-	4.15	4.15	4.14	-	4.65	4.65	4.64	-	5.19	5.18	5.18	-	5.79	5.79	5.78	-	6.50	6.49	6.49	-
		Amps	13.9	13.9	13.9	-	16.0	16.0	15.9	-	18.2	18.2	18.2	-	20.7	20.7	20.7	-	23.5	23.5	23.4	-	26.7	26.7	26.7	-
	2250	MBh	63.6	64.4	66.2	-	63.1	63.9	65.7	-	61.6	62.4	64.1	-	59.0	59.8	61.5	-	55.8	56.6	58.4	-	52.9	53.7	55.4	-
		S/T	0.61	0.54	0.41	-	0.61	0.54	0.42	-	0.63	0.57	0.44	-	0.65	0.58	0.46	-	0.67	0.60	0.48	-	0.72	0.65	0.53	-
		ΔT	18	16	12	-	18	16	12	-	18	16	12	-	18	16	12	-	18	16	12	-	19	17	13	-
		kW	3.72	3.72	3.71	-	4.17	4.17	4.16	-	4.67	4.67	4.66	-	5.21	5.21	5.20	-	5.81	5.81	5.80	-	6.52	6.52	6.51	-
		Amps	14.0	14.0	14.0	-	16.1	16.0	16.0	-	18.3	18.3	18.3	-	20.8	20.8	20.8	-	23.6	23.6	23.5	-	26.8	26.8	26.8	-
75	1500	MBh	58.8	59.6	61.3	64.0	58.3	59.1	60.8	63.5	56.8	57.6	59.3	62.0	54.1	55.0	56.7	59.3	51.0	51.8	53.5	56.2	48.1	48.9	50.6	53.3
		S/T	0.72	0.65	0.53	0.4	0.72	0.65	0.53	0.4	0.74	0.68	0.55	0.4	0.76	0.69	0.57	0.4	0.78	0.71	0.59	0.5	0.83	0.76	0.64	0.5
		ΔT	27	24	20	16	27	24	20	16	27	25	21	17	27	24	20	16	26	24	20	16	28	25	21	17
		kW	3.65	3.65	3.64	3.7	4.10	4.10	4.09	4.1	4.60	4.60	4.59	4.6	5.14	5.13	5.13	5.2	5.74	5.74	5.73	5.8	6.45	6.44	6.44	6.5
		Amps	13.7	13.7	13.6	13.8	15.7	15.7	15.7	15.8	18.0	18.0	18.0	18.1	20.5	20.5	20.4	20.6	23.2	23.2	23.2	23.4	26.5	26.5	26.4	26.6
	2000	MBh	61.6	62.5	64.2	66.8	61.1	61.9	63.7	66.3	59.6	60.4	62.2	64.8	57.0	**57.8**	59.6	62.2	53.8	54.6	56.4	59.0	50.9	51.7	53.5	56.1
		S/T	0.75	0.68	0.56	0.4	0.76	0.69	0.57	0.4	0.78	0.71	0.59	0.5	0.80	**0.73**	0.61	0.5	0.82	0.75	0.63	0.5	1.00	0.80	0.67	0.5
		ΔT	24	22	18	14	24	22	18	14	24	22	18	14	24	**22**	18	14	24	21	17	13	25	23	19	15
		kW	3.70	3.70	3.69	3.72	4.15	4.14	4.14	4.17	4.65	4.64	4.64	4.67	5.19	**5.18**	5.17	5.21	5.79	5.78	5.78	5.81	6.50	6.49	6.48	6.52
		Amps	13.9	13.9	13.9	14.0	16.0	15.9	15.9	16.1	18.2	18.2	18.2	18.3	20.7	**20.7**	20.7	20.8	23.5	23.4	23.4	23.6	26.7	26.7	26.6	26.8
	2250	MBh	63.7	64.5	66.2	68.9	63.1	64.0	65.7	68.3	61.6	62.4	64.2	66.8	59.0	**59.8**	61.6	64.2	55.8	56.7	58.4	61.0	52.9	53.8	55.5	58.1
		S/T	0.72	0.65	0.53	0.4	0.73	0.66	0.54	0.4	0.75	0.68	0.56	0.4	0.77	**0.70**	0.58	0.4	1.00	0.72	0.60	0.5	1.00	0.77	0.64	0.5
		ΔT	23	21	17	12	23	21	17	12	23	21	17	13	23	**21**	17	12	22	20	16	12	24	22	18	13
		kW	3.72	3.72	3.71	3.7	4.17	4.16	4.16	4.2	4.67	4.66	4.66	4.7	5.21	**5.20**	5.19	5.2	5.81	5.81	5.80	5.8	6.52	6.51	6.50	6.5
		Amps	14.0	14.0	14.0	14.1	16.0	16.0	16.0	16.2	18.3	18.3	18.3	18.4	20.8	**20.8**	20.7	20.9	23.6	23.5	23.5	23.7	26.8	26.8	26.7	26.9

IDB: Entering Indoor Dry Bulb Temperature

Shaded area reflects ACCA (TVA) conditions

kW = Total system power

High and low pressures are measured at the liquid and suction service valves.

Amps = outdoor unit amps (comp.+fan)

EXPANDED COOLING DATA — GLXS4BA6010A*+ CAPTA6030A* (CONT.)

			Outdoor Ambient Temperature																							
			65				75				85				95				105				115			
			Entering Indoor Wet Bulb Temperature																							
IDB	Airflow		59	63	67	71	59	63	67	71	59	63	67	71	59	63	67	71	59	63	67	71	59	63	67	71
80	1500	MBh	59.1	59.9	61.6	64.3	58.6	59.4	61.1	63.8	57.1	57.9	59.6	62.3	54.4	55.3	57.0	59.6	51.3	52.1	53.8	56.5	48.4	49.2	50.9	53.6
		S/T	0.83	0.76	0.64	0.5	0.84	0.77	0.64	0.5	0.86	0.79	0.67	0.5	1.00	0.81	0.68	0.6	1.00	0.83	0.70	0.6	1.00	0.87	0.75	0.6
		ΔT	31	29	25	21	31	29	25	21	32	29	25	21	31	29	25	21	31	29	25	21	32	30	26	22
		kW	3.66	3.65	3.65	3.7	4.10	4.10	4.09	4.1	4.60	4.60	4.59	4.6	5.14	5.14	5.13	5.2	5.74	5.74	5.73	5.8	6.45	6.45	6.44	6.5
		Amps	13.7	13.7	13.7	13.8	15.7	15.7	15.7	15.9	18.0	18.0	18.0	18.1	20.5	20.5	20.4	20.6	23.3	23.2	23.2	23.4	26.5	26.5	26.4	26.6
	2000	MBh	61.9	62.8	64.5	67.1	61.4	62.2	64.0	66.6	59.9	60.7	62.5	65.1	57.3	58.1	**59.9**	62.5	54.1	54.9	56.7	59.3	51.2	52.0	53.8	56.4
		S/T	0.87	0.80	0.68	0.5	0.87	0.80	0.68	0.6	1.00	0.83	0.70	0.6	1.00	0.84	**0.72**	0.6	1.00	0.86	0.74	0.6	1.00	0.91	0.79	0.7
		ΔT	29	27	23	18	29	27	23	18	29	27	23	19	29	26	**22**	18	28	26	22	18	30	28	24	19
		kW	3.70	3.70	3.69	3.73	4.15	4.15	4.14	4.17	4.65	4.65	4.64	4.67	5.19	5.18	**5.18**	5.21	5.79	5.79	5.78	5.81	6.50	6.49	6.49	6.52
		Amps	13.9	13.9	13.9	14.0	16.0	15.9	15.9	16.1	18.2	18.2	18.2	18.4	20.7	20.7	**20.7**	20.8	23.5	23.5	23.4	23.6	26.7	26.7	26.7	26.8
	2250	MBh	64.0	64.8	66.5	69.2	63.4	64.3	66.0	68.6	61.9	62.7	64.5	67.1	59.3	60.1	61.9	64.5	56.1	57.0	58.7	61.3	53.2	54.1	55.8	58.4
		S/T	0.83	0.77	0.64	0.5	0.84	0.77	0.65	0.5	1.00	0.79	0.67	0.5	1.00	0.81	0.69	0.6	1.00	0.83	0.71	0.6	1.00	0.88	0.76	0.6
		ΔT	28	25	21	17	27	25	21	17	28	26	22	17	27	25	21	17	27	25	21	17	29	26	22	18
		kW	3.72	3.72	3.71	3.7	4.17	4.17	4.16	4.2	4.67	4.67	4.66	4.7	5.21	5.20	5.20	5.2	5.81	5.81	5.80	5.8	6.52	6.51	6.51	6.5
		Amps	14.0	14.0	14.0	14.1	16.1	16.0	16.0	16.2	18.3	18.3	18.3	18.4	20.8	20.8	20.8	20.9	23.6	23.5	23.5	23.7	26.8	26.8	26.7	26.9
85	1500	MBh	60.1	60.9	62.6	65.3	59.5	60.4	62.1	64.7	58.0	58.8	60.6	63.2	55.4	**56.2**	58.0	60.6	52.2	53.1	54.8	57.4	49.3	50.2	51.9	54.5
		S/T	0.92	0.85	0.73	0.6	1.00	0.86	0.74	0.6	1.00	0.88	0.76	0.6	1.00	**0.90**	0.78	0.6	1.00	0.92	0.80	0.7	1.00	1.00	0.84	0.7
		ΔT	36	33	29	25	36	33	29	25	36	34	30	26	36	**33**	29	25	35	33	29	25	37	34	30	26
		kW	3.66	3.66	3.65	3.7	4.11	4.11	4.10	4.1	4.61	4.61	4.60	4.6	5.15	**5.15**	5.14	5.2	5.75	5.75	5.74	5.8	6.46	6.46	6.45	6.5
		Amps	13.7	13.7	13.7	13.8	15.8	15.8	15.7	15.9	18.1	18.1	18.0	18.2	20.5	**20.5**	20.5	20.6	23.3	23.3	23.2	23.4	26.5	26.5	26.5	26.6
	2000	MBh	62.9	63.7	65.5	68.1	62.4	63.2	65.0	67.6	60.9	61.7	63.4	66.1	58.3	59.1	60.8	63.5	55.1	55.9	57.7	60.3	52.2	53.0	54.7	57.4
		S/T	1.00	0.89	0.77	0.6	1.00	0.89	0.77	0.6	1.00	0.92	0.80	0.7	1.00	0.93	0.81	0.7	1.00	0.95	0.83	0.7	1.00	1.00	0.88	0.8
		ΔT	33	31	27	23	33	31	27	23	33	31	27	23	33	31	27	23	33	30	26	22	34	32	28	24
		kW	3.71	3.71	3.70	3.74	4.16	4.16	4.15	4.18	4.66	4.65	4.65	4.68	5.20	5.19	5.19	5.22	5.80	5.80	5.79	5.82	6.51	6.50	6.50	6.53
		Amps	14.0	13.9	13.9	14.1	16.0	16.0	16.0	16.1	18.3	18.3	18.2	18.4	20.8	20.7	20.7	20.9	23.5	23.5	23.5	23.6	26.7	26.7	26.7	26.9
	2250	MBh	64.9	65.8	67.5	70.1	64.4	65.2	67.0	69.6	62.9	63.7	65.5	68.1	60.3	**61.1**	62.9	65.5	57.1	57.9	59.7	62.3	54.2	55.0	56.8	59.4
		S/T	1.00	0.86	0.74	0.6	1.00	0.86	0.74	0.6	1.00	0.89	0.76	0.6	1.00	**0.90**	0.78	0.7	1.00	1.00	0.80	0.7	1.00	1.00	0.85	0.7
		ΔT	32	30	26	21	32	30	26	21	32	30	26	22	32	**30**	26	21	31	29	25	21	33	31	27	22
		kW	3.73	3.73	3.72	3.8	4.18	4.18	4.17	4.2	4.68	4.67	4.67	4.7	5.22	**5.21**	5.21	5.2	5.82	5.82	5.81	5.8	6.53	6.52	6.52	6.5
		Amps	14.1	14.0	14.0	14.2	16.1	16.1	16.0	16.2	18.4	18.4	18.3	18.5	20.8	**20.8**	20.8	21.0	23.6	23.6	23.6	23.7	26.8	26.8	26.8	26.9

IDB: Entering Indoor Dry Bulb Temperature

Shaded area reflects AHRI conditions

kW = Total system power

High and low pressures are measured at the liquid and suction service valves.

Amps = outdoor unit amps (comp.+fan)

GLXS4BA1810*/CAPTA2422* Conditions: 80 °F IBD, 67 °F IWB @ 625 CFM				
Outdoor Tem. ° F.	Total BTU/h	Sensible BTU/h	Latent BTU/h	Total Watts
75	18,870	12,260	6,610	1,240
80	18,635	12,320	6,315	1,305
85	18,400	12,380	6,020	1,370
90	18,000	12,265	5,735	1,440
95	**17,600**	**12,150**	**5,450**	**1,510**
100	17,110	11,975	5,135	1,590
105	16,620	11,800	4,820	1,670
110	16,170	11,850	4,320	1,765
115	15,720	11,900	3,820	1,860
TVA Conditions @ 95° OD DB, 75° ID DB 63° ID WB				
95°	**16,970**	**11,870**	**5,100**	**1,520**

GLXS4BA2410*/CAPTA2422* Conditions: 80 °F IBD, 67 °F IWB @ 700 CFM				
Outdoor Tem. ° F.	Total BTU/h	Sensible BTU/h	Latent BTU/h	Total Watts
75	25,310	17,160	8,150	1,640
80	24,995	17,240	7,755	1,735
85	24,680	17,320	7,360	1,830
90	24,140	17,160	6,980	1,930
95	**23,600**	**17,000**	**6,600**	**2,030**
100	22,940	16,760	6,180	2,145
105	22,280	16,520	5,760	2,260
110	21,680	16,585	5,095	2,395
115	21,080	16,650	4,430	2,530
TVA Conditions @ 95° OD DB, 75° ID DB 63° ID WB				
95°	**22,760**	**16,610**	**6,150**	**2,030**

GLXS4BA3010*/CAPTA3026* Conditions: 80 °F IBD, 67 °F IWB @ 950 CFM				
Outdoor Tem. ° F.	Total BTU/h	Sensible BTU/h	Latent BTU/h	Total Watts
75	30,670	21,430	9,240	2,000
80	30,290	21,530	8,760	2,110
85	29,910	21,630	8,280	2,220
90	29,255	21,430	7,825	2,340
95	**28,600**	**21,230**	**7,370**	**2,460**
100	27,800	20,930	6,870	2,595
105	27,000	20,630	6,370	2,730
110	26,270	20,715	5,555	2,890
115	25,540	20,800	4,740	3,050
TVA Conditions @ 95° OD DB, 75° ID DB 63° ID WB				
95°	**27,580**	**20,750**	**6,830**	**2,460**

GLXS4BA3610*/CAPTA3626* Conditions: 80 °F IBD, 67 °F IWB @ 1138 CFM				
Outdoor Tem. ° F.	Total BTU/h	Sensible BTU/h	Latent BTU/h	Total Watts
75	36,670	26,080	10,590	2,380
80	36,215	26,205	10,010	2,515
85	35,760	26,330	9,430	2,650
90	34,980	26,085	8,895	2,795
95	**34,200**	**25,840**	**8,360**	**2,940**
100	33,245	25,475	7,770	3,105
105	32,290	25,110	7,180	3,270
110	31,420	25,215	6,205	3,460
115	30,550	25,320	5,230	3,650
TVA Conditions @ 95° OD DB, 75° ID DB 63° ID WB				
95°	**32,980**	**25,250**	**7,730**	**2,950**

GLXS4BA4210*/CAPTA4230* Conditions: 80 °F IBD, 67 °F IWB @ 1435 CFM				
Outdoor Tem. ° F.	Total BTU/h	Sensible BTU/h	Latent BTU/h	Total Watts
75	42,890	31,170	11,720	2,800
80	42,360	31,315	11,045	2,955
85	41,830	31,460	10,370	3,110
90	40,915	31,170	9,745	3,275
95	**40,000**	**30,880**	**9,120**	**3,440**
100	38,885	30,440	8,445	3,630
105	37,770	30,000	7,770	3,820
110	36,750	30,125	6,625	4,040
115	35,730	30,250	5,480	4,260
TVA Conditions @ 95° OD DB, 75° ID DB 63° ID WB				
95°	**38,570**	**30,180**	**8,390**	**3,450**

GLXS4BA4810*/CAPT6030* Conditions: 80 °F IBD, 67 °F IWB @ 1400 CFM				
Outdoor Tem. ° F.	Total BTU/h	Sensible BTU/h	Latent BTU/h	Total Watts
75	48,790	33,230	15,560	3,160
80	48,185	33,385	14,800	3,340
85	47,580	33,540	14,040	3,520
90	46,540	33,230	13,310	3,720
95	**45,500**	**32,920**	**12,580**	**3,920**
100	44,230	32,455	11,775	4,140
105	42,960	31,990	10,970	4,360
110	41,800	32,120	9,680	4,620
115	40,640	32,250	8,390	4,880
TVA Conditions @ 95° OD DB, 75° ID DB 63° ID WB				
95°	**43,880**	**32,170**	**11,710**	**3,920**

GLXS4BA6010*/CAPTA6030* Conditions: 80 °F IBD, 67 °F IWB @ 1500 CFM				
Outdoor Tem. ° F.	Total BTU/h	Sensible BTU/h	Latent BTU/h	Total Watts
75	61,120	39,380	21,740	4,090
80	60,360	39,565	20,795	4,340
85	59,600	39,750	19,850	4,590
90	58,300	39,380	18,920	4,860
95	**57,000**	**39,010**	**17,990**	**5,130**
100	55,410	38,460	16,950	5,430
105	53,820	37,910	15,910	5,730
110	52,365	38,065	14,300	6,085
115	50,910	38,220	12,690	6,440
TVA Conditions @ 95° OD DB, 75° ID DB 63° ID WB				
95°	**54,970**	**38,130**	**16,840**	**5,130**

NOTE: no factory installed crankcase heater

Model	Dimensions		
	W"	D"	H"
GLXS4BA1810A*	26	26	27
GLXS4BA2410A*	26	26	27
GLXS4BA3010A*	29	29	32
GLXS4BA3610A*	29	29	39½
GLXS4BA4210A*	35½	35½	35¾
GLXS4BA4810A*	35½	35½	35¾
GLXS4BA6010A*	35½	35½	39½

*Note: All the Dimensions (W, D, H) are for reference only.

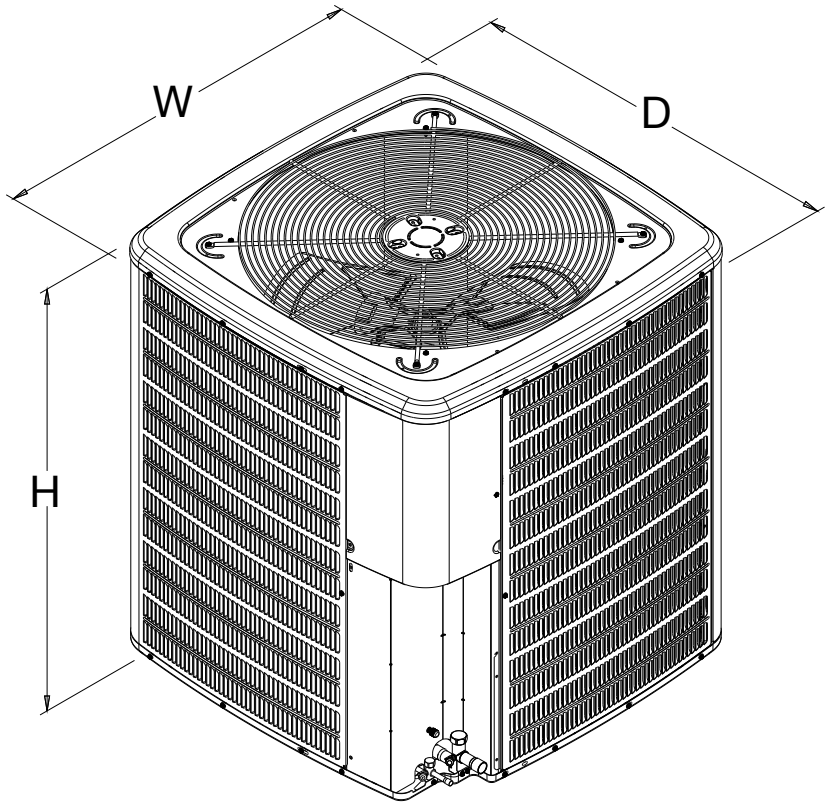

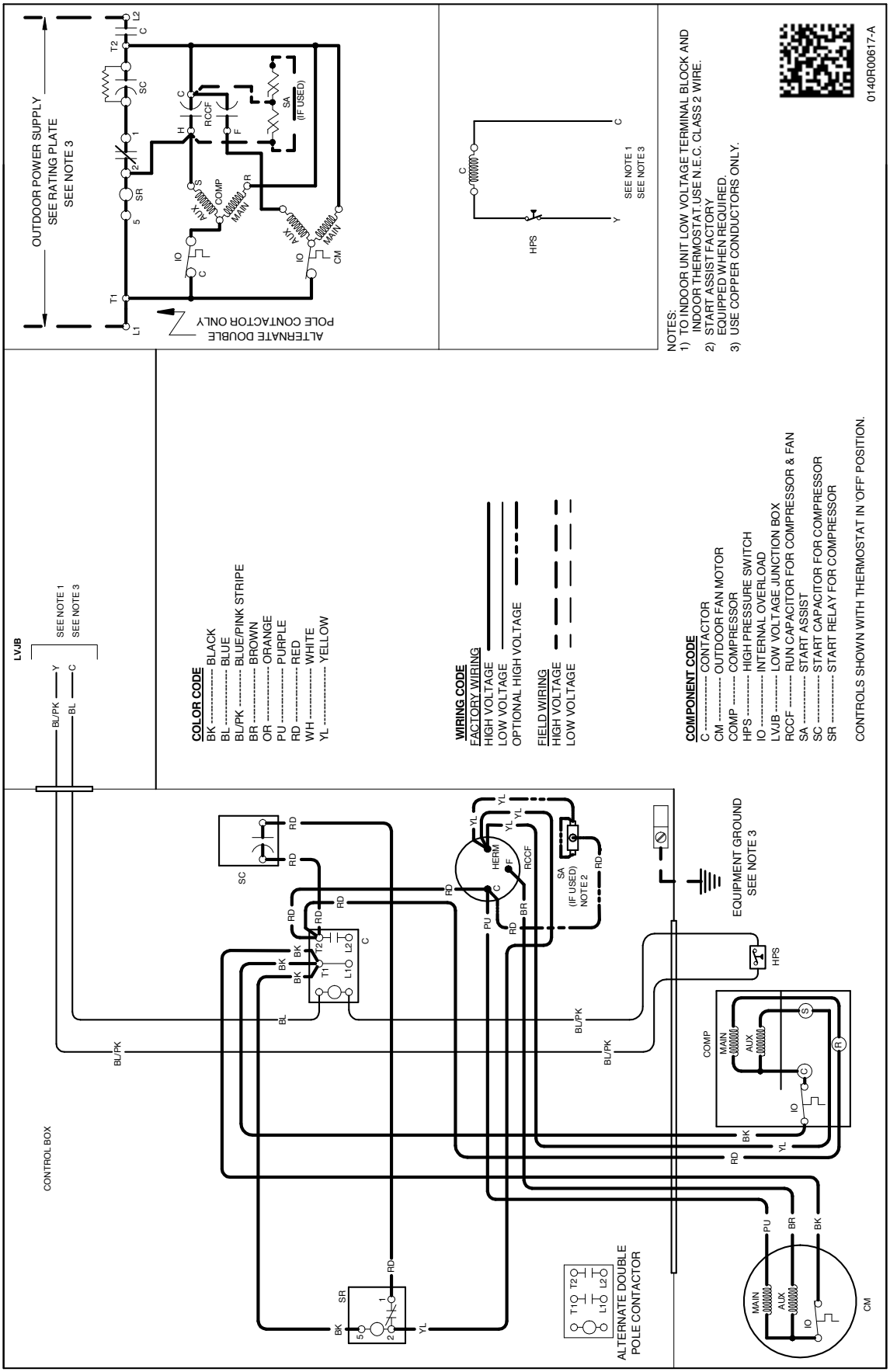

WARNING

High Voltage: Disconnect all power before servicing or installing this unit. Multiple power sources may be present. Failure to do so may cause property damage, personal injury, or death.

Wiring is subject to change. Always refer to the wiring diagram or the unit for the most up-to-date wiring.

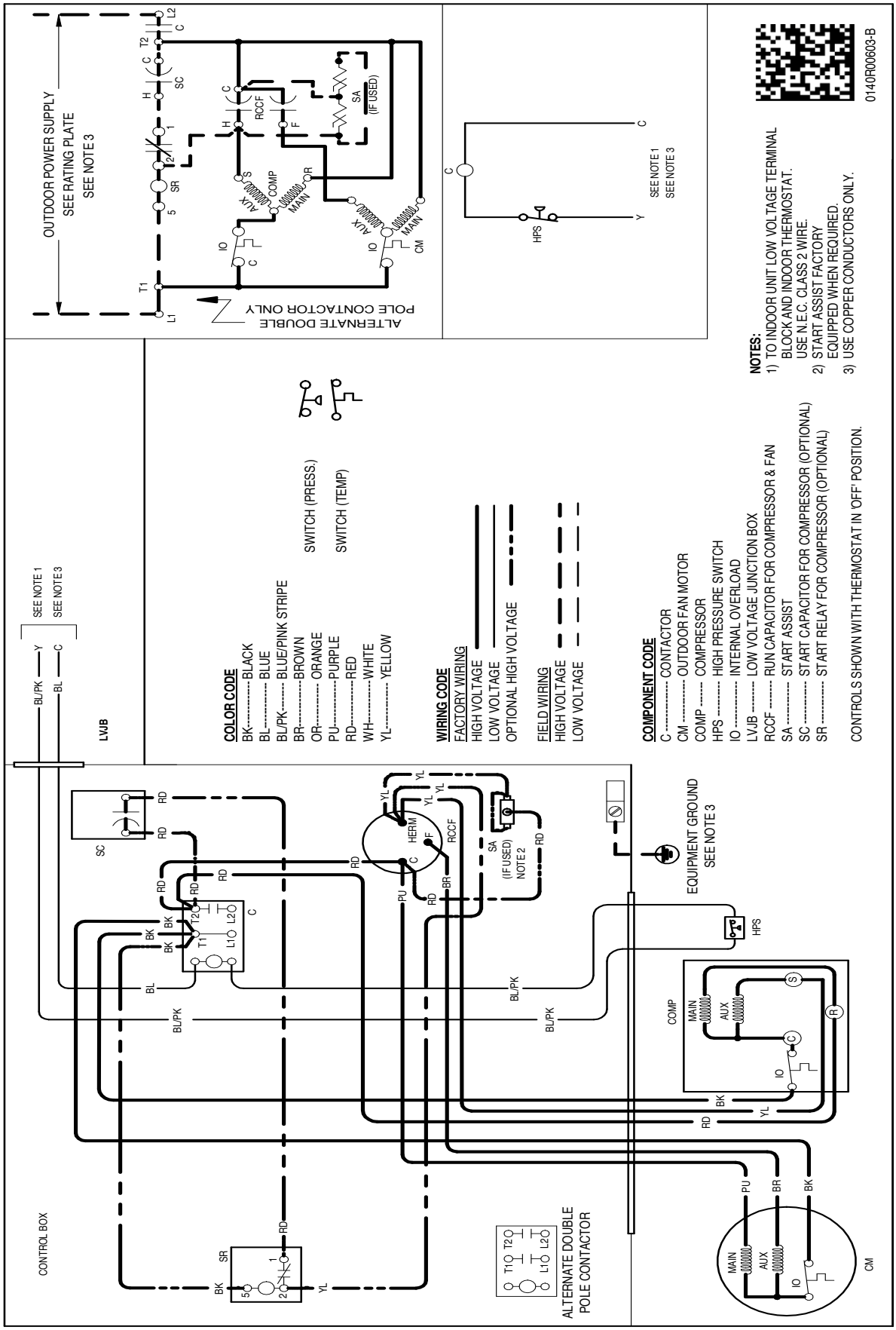

WARNING

High Voltage: Disconnect all power before servicing or installing this unit. Multiple power sources may be present. Failure to do so may cause property damage, personal injury, or death.

Wiring is subject to change. Always refer to the wiring diagram or the unit for the most up-to-date wiring.

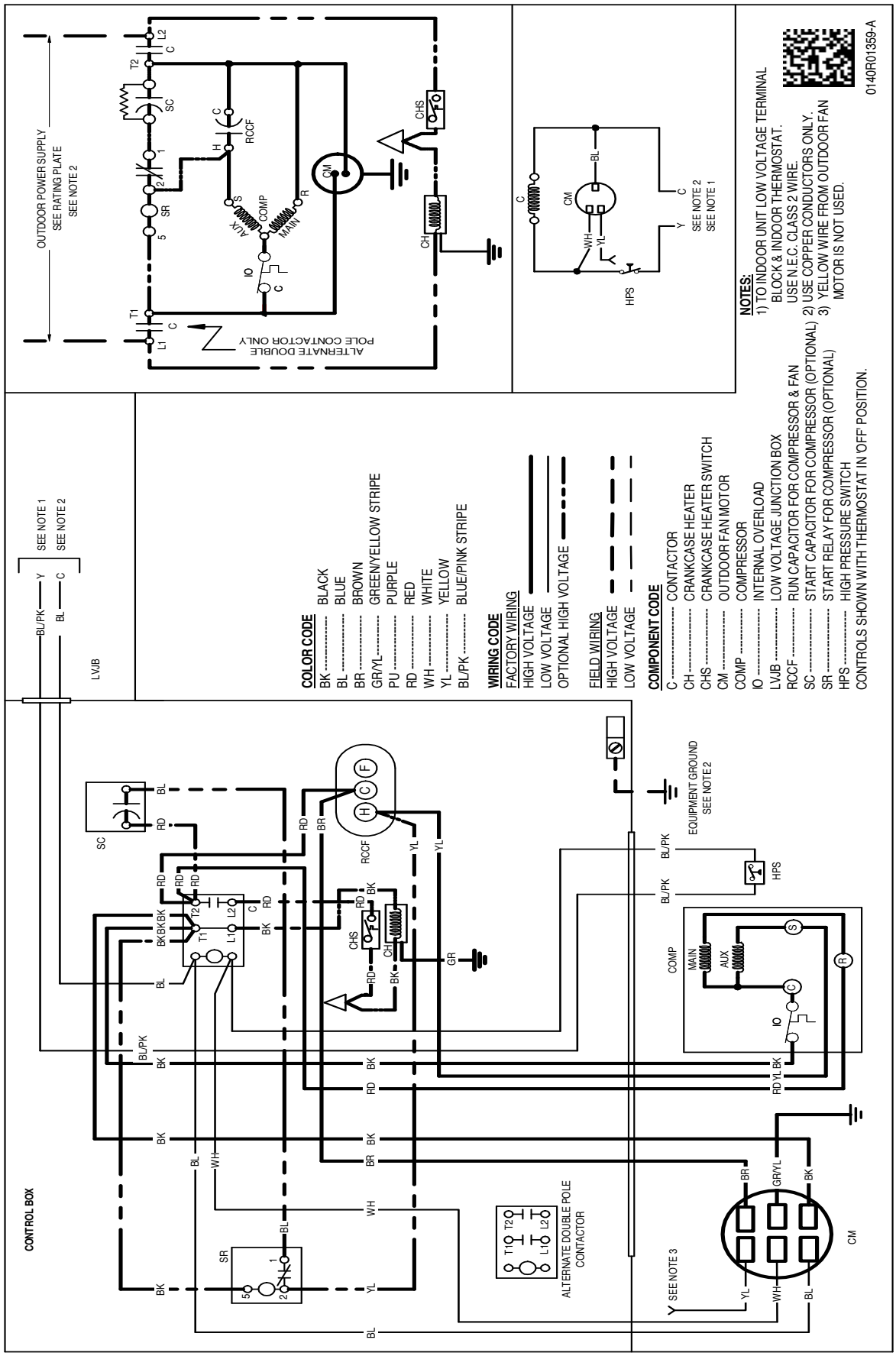

WARNING

High Voltage: Disconnect all power before servicing or installing this unit. Multiple power sources may be present. Failure to do so may cause property damage, personal injury, or death.

Wiring is subject to change. Always refer to the wiring diagram or the unit for the most up-to-date wiring.

MODEL	DESCRIPTION	GLXS4B A1810A*	GLXS4B A2410A*	GLXS4B A3010A*	GLXS4B A3610A*	GLXS4B A4210A*	GLXS4B A4810A*	GLXS4B A6010A*
0161R00128	Neutral Circular Cap	X	X	X	X	X	X	X
ABK-20	Anchor Bracket Kit ^	X	X	X	X	X	X	X
ASC01A	Anti-Short Cycle Kit	X	X	X	X	X	X	X
Factory Installed Hard-start Kit		X	X	X				
CSR-U-1	Hard-start Kit				X			
CSR-U-2	Hard-start Kit					X	X	X
CSR-U-3	Hard-start Kit						X	X
FSK01A[1]	Freeze Protection Kit	X	X	X	X	X	X	X
LSK02A[2]	Liquid Line Solenoid Kit	X	X	X	X	X	X	X
LAKT01	Low-Ambient Kit	X	X	X	X	X	X	
0130R00000S	Low-Pressure Switch Kit	X	X	X	X	X	X	X

^ Contains 20 brackets; four brackets needed to anchor unit to pad

[1] Installed on indoor coil

[2] Condensing units and heat pumps with reciprocating or rotary compressors require the use of start-assist components when used in conjunction with an indoor coil using a non-bleed thermal expansion valve refrigerant metering device or liquid line solenoid kit. The TXV should always be sized based on the tonnage of the outdoor unit.

All AHRI system ratings are accessible in the System Configurator tool via PartnerLink.

The manufacturing entity reserves the right to discontinue, or change at any time, specifications or designs without notice or without incurring obligations.