Franklin™
Air Conditioning & Heating

# AVPTC

## *Multi-Position, Variable-Speed ECM Based Air Handler with Internal TXV ComfortNet® Compatible 1½ to 5 Tons*

### *Contents*


Air Handler Nomenclature ..... 2
Heater Kit Nomenclature ..... 2
Product Specifications ..... 3
Dimensions ..... 4
Airflow Data ..... 6
Heat Kit Data ..... 12
Wiring Diagram ..... 22
Accessories ..... 24


### *Product Features*

- Internal factory-installed thermal expansion valves for cooling and heat pump applications
- Variable-speed ECM blower motor
- ComfortNet® Communicating System compatible
- Auto configuration of the airflow and tonnage in communicating mode
- Provides constant CFM over a wide range of static pressure conditions independent of duct system
- CFM indicator
- Fault recall of six most recent faults
- Provides adjustable low CFM for efficient fan-only operation
- Improved humidity and comfort control
- Built-in compatibility with multi-stage heat pump and cooling applications
- All-aluminum evaporator coil
- AHRI certified; ETL listed
- Rigid SmartFrame™ cabinet
- Cabinet air leakage less than 2.0% at 1.0 inch $H_2O$ when tested in accordance with ASHRAE standard 193
- Cabinet air leakage less than 1.4% at 0.5 inch $H_2O$ when tested in accordance with ASHRAE standard 193
- Horizontal or vertical configuration capabilities
- 21" depth for easier attic access
- DecaBDE-free thermoplastic drain pan with secondary drain connections
- Screw-less sides and back helps to reduce condensation when installed in humid locations
- Foil-faced insulation covers the internal casing to reduce cabinet condensation
- Galvanized, leather grain-embossed finish
- Glue-less cabinet insulation retention
- Tool-less filter access
- Field Installed 3 kW – 25 kW electric heater kits available

10 YEAR PARTS LIMITED WARRANTY*

ComfortNet

ALL ALUMINUM COIL

AHRI CERTIFIED® www.ahridirectory.org

c ETL LISTED us Intertek

COMPANY WITH QUALITY SYSTEM CERTIFIED BY DNV GL = ISO 9001 =

COMPANY WITH ENVIRONMENTAL SYSTEM CERTIFIED BY DNV GL = ISO 14001 =

* Complete warranty details available from your local dealer or at www.franklinhvacsystems.com. To receive the 10-Year Parts Limited Warranty, online registration must be completed within 60 days of installation. Online registration is not required in California or Quebec.

| A | V | P | T | C | 25 | B | 1 | 4 | AA |
|---|---|---|---|---|---|---|---|---|---|
| 1 | 2 | 3 | 4 | 5 | 6,7 | 8 | 9 | 10 | 11,12 |

**Brand**
A Single-Piece Airhandler

**Unit Application**
R Multi Position PSC Motor
S Multi Position EEM Motor
V Multi Position Variable-Speed Motor-Communinacating

**Cabinet Finish**
U Unpainted
P Painted

**Expansion Device**
T Expansion Device
V Inverter Tuned Expansion Valve

**Communications**
C = ComfortNet™ Compatible

**Nominal Capacity @ 13SEER**

| | | |
|---|---|---|
| 24 = 2 Tons | 35 = 3 Tons | 49 =4 Tons |
| 25 = 2 Tons | 37 = 2½-3½ Tons | 59 = 4-5 Tons |
| 29 = 2 Tons | 39 = 3 Tons | 60 = 5 Tons |
| 31 = 2½ Tons | 42 = 3½ Tons | 61 = 5 Tons |
| 33 = 2 Tons | 48 = 4 Tons | |

**Cabinet Width**
B = 17½"
C = 21"
D = 24½"

**Electrical**
1 208/230V, 1 Phase, 60 Hz

**Refrigerant Charge**
4 = R-410A

**Engineering***
Major/Minor Revisions
*Not used for inventory management

| HKS | X | 03 | X | A | AA |
|---|---|---|---|---|---|
| 1 | 2 | 3 | 4 | 5 | 6,7 |

**Unit Type**
HKS Heat Kit for Air Handlers

**Circuit Breaker**
X No circuit breaker
C Circuit Breaker

**Heating Capacity @ 240 Volts**

| | | | |
|---|---|---|---|
| 03 | 3.0 kW | 15 | 14.4 kW |
| 05 | 4.5 kW | 19 | 19.2 kW wth 150F limit |
| 06 | 6.0 kW | 20 | 19.2 kW with 170F limit |
| 08 | 8.0 kW | 25 | 25.0 kW |
| 10 | 9.6 kW | | |

**Cabinet Size (MAX)**
C C Cabinet
D D Cabinet
X All Cabinet Sizes

**Phase**

| | |
|---|---|
| A Single Phase 208 V | E Three Phase 240 V |
| B Single Phase 240 V | F Three Phase 208/240 V |
| C Single Phase 208/240 V | G Three Phase 460 V |
| D Three Phase 208 V | |

**Revisions**
Engineering Revisions

| | AVPTC 24B14A* | AVPTC 25B14A* | AVPTC 29B14A* | AVPTC 31C14A* | AVPTC 33C14* | AVPTC 35B14A* | AVPTC 37B14A* | AVPTC 37C14A* | AVPTC 37D14A* |
|---|---|---|---|---|---|---|---|---|---|
| **Nominal Ratings** | | | | | | | | | |
| Cooling (BTU/h) | 24,000 | 24,000 | 30,000 | 30,000 | 24,000 | 28,000 | 36,000 | 36,000 | 36,000 |
| CFM (High range) | 1100/600 | 1085/650 | 1085/610 | 1315/870 | 1090/685 | 1020/685 | 1085/610 | 1315/870 | 1375/865 |
| **Blower** | | | | | | | | | |
| Diameter | 9½" | 9½" | 9½" | 10⅝" | 10⅝" | 9½" | 9½" | 10⅝" | 10⅝" |
| Width | 6" | 6" | 6" | 8" | 8" | 6" | 6" | 8" | 10⅝" |
| Coil Drain Connection FPT | ¾" | ¾" | ¾" | ¾" | ¾" | ¾" | ¾" | ¾" | ¾" |
| **Service Valve** | | | | | | | | | |
| Liquid | ⅜" | ⅜" | ⅜" | ⅜" | ⅜" | ⅜" | ⅜" | ⅜" | ⅜" |
| Suction | ¾" | ¾" | ⅞" | ⅞" | ⅞" | ¾" | ⅞" | ⅞" | ⅞" |
| **Electrical Data** | | | | | | | | | |
| Voltage | 208/240 | 208/240 | 208/240 | 208/240 | 208/240 | 208/240 | 208/240 | 208/240 | 208/240 |
| Min Circuit Ampacity | 4.9/4.9 | 4.9/4.9 | 6.5/6.5 | 6.5/6.5 | 4.9/4.9 | 4.9/4.9 | 6.5/6.5 | 6.5/6.5 | 6.5/6.5 |
| Max. Overcurrent Device (amps) | 15/15 | 15/15 | 15/15 | 15/15 | 15/15 | 15/15 | 15/15 | 15/15 | 15/15 |
| Minimum VAC | 197 | 197 | 197 | 197 | 197 | 197 | 197 | 197 | 197 |
| Maximum VAC | 253 | 253 | 253 | 253 | 253 | 253 | 253 | 253 | 253 |
| **Blower Motor** | | | | | | | | | |
| FLA | 3.9 | 3.9 | 5.2 | 5.2 | 3.9 | 3.9 | 5.2 | 5.2 | 5.2 |
| HP | ½ | ½ | ¾ | ¾ | ½ | ½ | ¾ | ¾ | ¾ |
| **Ship Weight (lbs)** | 100 | 116 | 129 | 144 | 118 | 116 | 129 | 144 | 155 |

Note: Minimum Circuit Ampacity (MCA) and Maximum Overcurrent Protection (MOP) for blower without supplemental heat installed.
Refer to unit nameplate and/or Heat Kit Data for specification with approved accessory heaters installed

| | AVPTC 39C14* | AVPTC 42D14A* | AVPTC 48C14A* | AVPTC 48D14A* | AVPTC 49C14* | AVPTC 49D14A* | AVPTC 59C14A* | AVPTC 59D14A* | AVPTC 60D14A* | AVPTC 61D14A* |
|---|---|---|---|---|---|---|---|---|---|---|
| **Nominal Ratings** | | | | | | | | | | |
| Cooling (BTU/h) | 36,000 | 42,000 | 42,000 | 48,000 | 48,000 | 42,000 | 48,000 | 48,000 | 60,000 | 60,000 |
| CFM (High range) | 1315/965 | 1700/800 | 1660/700 | 1800/1350 | 1420/1040 | 1530/1195 | 1595/875 | 1990/1445 | 2000/1600 | 2025/1630 |
| **Blower** | | | | | | | | | | |
| Diameter | 10⅝" | 10⅝" | 10⅝" | 10⅝" | 10⅝" | 10⅝" | 10⅝" | 11 15/16" | 11⅝" | 11 15/16" |
| Width | 8" | 10⅝" | 10⅝" | 10⅝" | 8" | 10⅝" | 8" | 10⅝" | 10⅝" | 10⅝" |
| Coil Drain Connection FPT | ¾" | ¾" | ¾" | ¾" | ¾" | ¾" | ¾" | ¾" | ¾" | ¾" |
| **Service Valve** | | | | | | | | | | |
| Liquid | ⅜" | ⅜" | ⅜" | ⅜" | ⅜" | ⅜" | ⅜" | ⅜" | ⅜" | ⅜" |
| Suction | ⅞" | ⅞" | ⅞" | ⅞" | ⅞" | ⅞" | ⅞" | ⅞" | ⅞" | ⅞" |
| **Electrical Data** | | | | | | | | | | |
| Voltage | 208/240 | 208/240 | 208/240 | 208/240 | 208/240 | 208/240 | 208/240 | 208/240 | 208/240 | 208/240 |
| Min Circuit Ampacity | 6.5/6.5 | 6.5/6.5 | 6.5/6.5 | 6.5/6.5 | 6.5/6.5 | 6.5/6.5 | 8.6/8.6 | 8.6/8.6 | 8.6/8.6 | 8.6/8.6 |
| Max. Overcurrent Device (amps) | 15/15 | 15/15 | 15/15 | 15/15 | 15/15 | 15/15 | 15/15 | 15/15 | 15/15 | 15/15 |
| Minimum VAC | 197 | 197 | 197 | 197 | 197 | 197 | 197 | 197 | 197 | 197 |
| Maximum VAC | 253 | 253 | 253 | 253 | 253 | 253 | 253 | 253 | 253 | 253 |
| **Blower Motor** | | | | | | | | | | |
| FLA | 5.2 | 5.2 | 5.2 | 5.2 | 5.2 | 5.2 | 6.9 | 6.9 | 6.9 | 6.9 |
| HP | ¾ | ¾ | ¾ | ¾ | ¾ | ¾ | 1 | 1 | 1 | 1 |
| **Ship Weight (lbs)** | 118 | 155 | 125 | 167 | 125 | 167 | 144 | 155 | 167 | 167 |

Note: Minimum Circuit Ampacity (MCA) and Maximum Overcurrent Protection (MOP) for blower without supplemental heat installed.
Refer to unit nameplate and/or Heat Kit Data for specification with approved accessory heaters installed

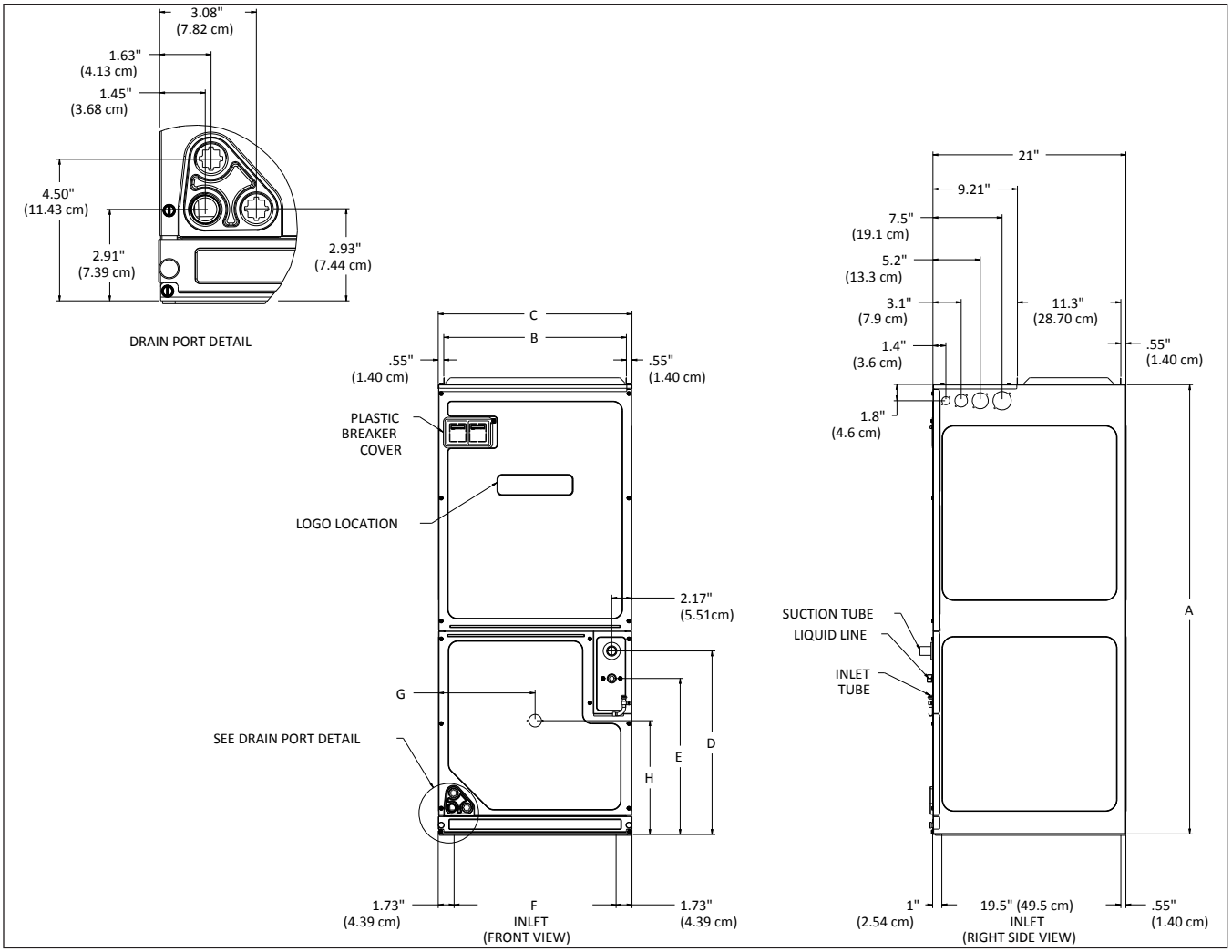


| MODEL | A | B | C | D | E | F | G | H |
|---|---|---|---|---|---|---|---|---|
| AVPTC24B14 | 45 | 16⅜ | 17½ | 18 | 15 | 14 3/16 | 8 13/16 | 11 15/16 |
| AVPTC42D14 | 58 | 23 5/16 | 24½ | 28 3/16 | 25 3/16 | 21 3/16 | 12 5/16 | 12⅜ |
| AVPTC48C14 | 49 | 19 15/16 | 21 | 20 | 17 | 17 11/16 | 10½ | 12⅜ |
| AVPTC48D14 | 58 | 23 5/16 | 24½ | 28 3/16 | 25 3/16 | 21 3/16 | 12 5/16 | 12⅜ |
| AVPTC60D14 | 58 | 23 5/16 | 24½ | 28 3/16 | 25 3/16 | 21 3/16 | 12 5/16 | 12⅜ |

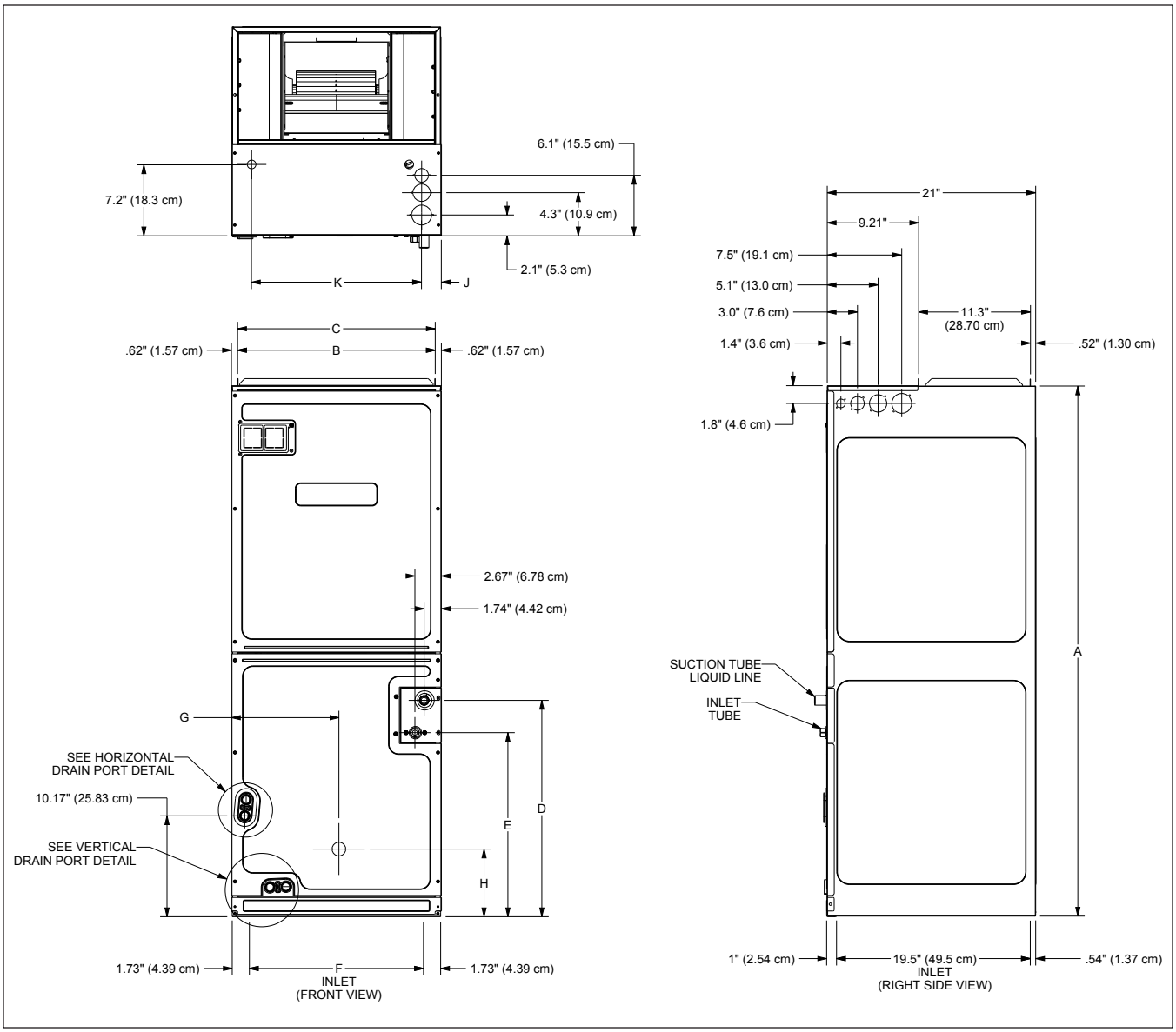


| Model | A | B | C | D | E | F | G | H |
|---|---|---|---|---|---|---|---|---|
| AVPTC25B14* | 45 | 16⅜ | 17½ | 15¼ | 12 | 14⅙ | 9⅛ | 12⅝ |
| AVPTC29B14* | 53 7/16 | 16⅜ | 17½ | 23 11/16 | 20½ | 14⅙ | 9⅛ | 7⅝ |
| AVPTC31C14* | 53 7/16 | 19⅞ | 21 | 21 13/16 | 18⅝ | 17 11/16 | 10 13/16 | 6 13/16 |
| AVPTC33C14* | 49 | 19⅞ | 21 | 17 9/16 | 14⅜ | 17 11/16 | 10 9/16 | 12½ |
| AVPTC35B14* | 45 | 16⅜ | 17½ | 15¼ | 12 | 14⅙ | 9⅛ | 12⅝ |
| AVPTC37B14* | 53 7/16 | 16⅜ | 17½ | 23 11/16 | 20½ | 14⅙ | 9⅛ | 7⅝ |
| AVPTC37C14* | 53 7/16 | 19⅞ | 21 | 21 13/16 | 18⅝ | 17 11/16 | 10 13/16 | 6 13/16 |
| AVPTC37D14* | 53 7/16 | 23 5/16 | 24½ | 21½ | 18 5/16 | 21 3/16 | 12⅝ | 6⅞ |
| AVPTC39C14* | 49 | 19⅞ | 21 | 17 9/16 | 14⅜ | 17 11/16 | 10 9/16 | 12½ |
| AVPTC49C14* | 49 | 19⅞ | 21 | 17 9/16 | 14⅜ | 17 11/16 | 10 9/16 | 12½ |
| AVPTC49D14* | 58 | 23 5/16 | 24½ | 26⅛ | 22⅞ | 21 3/16 | 12⅝ | 25⅛ |
| AVPTC59C14* | 53 7/16 | 19⅞ | 21 | 21 13/16 | 18⅝ | 17 11/16 | 10 13/16 | 6 13/16 |
| AVPTC59D14* | 53 7/16 | 23 5/16 | 24½ | 21½ | 18 5/16 | 21 3/16 | 12⅝ | 6⅞ |
| AVPTC61D14* | 58 | 23 5/16 | 24½ | 26⅛ | 22⅞ | 21 3/16 | 12⅝ | 25⅛ |

| Model | Speed Tap | | 0.1 | 0.2 | 0.3 | 0.4 | 0.5 | 0.6 | 0.7 | 0.8 | 0.9 |
|---|---|---|---|---|---|---|---|---|---|---|---|
| AVPTC24B14 | A | Low | 415 | 415 | 410 | 410 | 405 | 405 | 400 | 400 | 400 |
| | B | Low | 575 | 570 | 565 | 560 | 560 | 555 | 555 | 550 | 550 |
| | C | Low | 685 | 670 | 660 | 650 | 645 | 635 | 630 | 625 | 620 |
| | D | Low | 795 | 780 | 765 | 755 | 745 | 735 | 725 | 720 | 715 |
| | A | High | 620 | 615 | 610 | 605 | 600 | 600 | 595 | 590 | 590 |
| | B | High | 865 | 850 | 835 | 825 | 815 | 805 | 795 | 790 | 785 |
| | C | High | 1005 | 990 | 970 | 960 | 945 | 935 | 920 | 915 | 910 |
| | D | High | 1165 | 1145 | 1125 | 1110 | 1100 | 1085 | 1070 | 1065 | 1055 |
| AVPTC25B14AB | A | Low | 460 | 445 | 445 | 425 | 410 | 400 | 400 | 400 | 395 |
| | B | Low | 620 | 610 | 600 | 605 | 600 | 590 | 585 | 575 | 565 |
| | C | Low | 700 | 695 | 690 | 690 | 690 | 690 | 675 | 665 | 660 |
| | D | Low | 750 | 750 | 745 | 745 | 740 | 730 | 720 | 710 | 700 |
| | A | High | 670 | 660 | 650 | 650 | 655 | 645 | 640 | 635 | 625 |
| | B | High | 870 | 865 | 855 | 850 | 840 | 840 | 840 | 830 | 835 |
| | C | High | 1000 | 990 | 980 | 975 | 965 | 965 | 955 | 955 | 945 |
| | D | High | 1105 | 1095 | 1085 | 1075 | 1065 | 1055 | 1050 | 1040 | 1030 |
| AVPTC29B14AB<br>AVPTC37B14AB | A | Low | 390 | 385 | 375 | 360 | 350 | 335 | 325 | 315 | 305 |
| | B | Low | 545 | 540 | 545 | 540 | 540 | 540 | 535 | 530 | 525 |
| | C | Low | 610 | 620 | 630 | 635 | 630 | 625 | 620 | 625 | 625 |
| | D | Low | 720 | 735 | 740 | 740 | 735 | 730 | 725 | 715 | 705 |
| | A | High | 615 | 620 | 610 | 605 | 610 | 615 | 615 | 620 | 625 |
| | B | High | 790 | 795 | 795 | 795 | 795 | 790 | 800 | 795 | 785 |
| | C | High | 925 | 930 | 930 | 925 | 925 | 920 | 915 | 910 | 905 |
| | D | High | 1085 | 1085 | 1085 | 1080 | 1080 | 1075 | 1070 | 1065 | 1060 |
| AVPTC31C14AD<br>AVPTC37C14AC | A | Low | 610 | 600 | 590 | 590 | 600 | 605 | 610 | 610 | 610 |
| | B | Low | 710 | 710 | 705 | 705 | 695 | 690 | 685 | 675 | 665 |
| | C | Low | 845 | 845 | 845 | 825 | 815 | 810 | 800 | 805 | 795 |
| | D | Low | 915 | 910 | 910 | 900 | 850 | 840 | 830 | 820 | 825 |
| | A | High | 885 | 880 | 880 | 860 | 850 | 840 | 830 | 820 | 830 |
| | B | High | 1055 | 1055 | 1055 | 1040 | 1030 | 1015 | 1005 | 995 | 985 |
| | C | High | 1275 | 1270 | 1265 | 1260 | 1250 | 1240 | 1230 | 1215 | 1205 |
| | D | High | 1365 | 1360 | 1360 | 1330 | 1300 | 1290 | 1280 | 1270 | 1255 |
| AVPTC33C14AB | A | Low | 500 | 480 | 460 | 445 | 430 | 415 | 400 | 380 | 365 |
| | B | Low | 580 | 565 | 545 | 535 | 525 | 515 | 505 | 495 | 485 |
| | C | Low | 710 | 700 | 685 | 675 | 670 | 665 | 655 | 645 | 640 |
| | D | Low | 725 | 750 | 755 | 760 | 755 | 745 | 735 | 725 | 715 |
| | A | High | 710 | 700 | 685 | 685 | 685 | 680 | 670 | 660 | 645 |
| | B | High | 765 | 780 | 785 | 785 | 785 | 775 | 770 | 760 | 745 |
| | C | High | 950 | 960 | 970 | 970 | 970 | 960 | 955 | 945 | 935 |
| | D | High | 1090 | 1090 | 1090 | 1095 | 1090 | 1085 | 1080 | 1075 | 1065 |

Note: When applying a humidistat (normally closed), refer to the installation and operating instructions. The humidistat can adjust the cooling airflow to 85%.

| Model | Speed Tap | | 0.1 | 0.2 | 0.3 | 0.4 | 0.5 | 0.6 | 0.7 | 0.8 | 0.9 |
|---|---|---|---|---|---|---|---|---|---|---|---|
| AVPTC35B14 | A | Low | 395 | 390 | 395 | 390 | 385 | 380 | 380 | 380 | 380 |
| | B | Low | 580 | 580 | 590 | 580 | 575 | 580 | 575 | 575 | 575 |
| | C | Low | 670 | 670 | 680 | 690 | 680 | 670 | 660 | 660 | 665 |
| | D | Low | 715 | 705 | 710 | 720 | 715 | 705 | 690 | 685 | 680 |
| | A | High | 645 | 630 | 645 | 645 | 635 | 630 | 630 | 635 | 635 |
| | B | High | 900 | 875 | 870 | 870 | 870 | 870 | 865 | 855 | 845 |
| | C | High | 1030 | 1015 | 1005 | 995 | 990 | 985 | 990 | 990 | 980 |
| | D | High | 1075 | 1060 | 1045 | 1035 | 1030 | 1025 | 1020 | 1020 | 1015 |
| AVPTC37D14AC | A | Low | 605 | 605 | 605 | 575 | 560 | 545 | 525 | 510 | 500 |
| | B | Low | 730 | 725 | 725 | 700 | 700 | 695 | 680 | 660 | 645 |
| | C | Low | 820 | 820 | 820 | 800 | 760 | 750 | 740 | 720 | 700 |
| | D | Low | 870 | 885 | 940 | 885 | 875 | 865 | 850 | 835 | 835 |
| | A | High | 910 | 905 | 900 | 870 | 870 | 860 | 855 | 845 | 845 |
| | B | High | 1085 | 1080 | 1080 | 1060 | 1060 | 1055 | 1045 | 1035 | 1020 |
| | C | High | 1230 | 1225 | 1225 | 1205 | 1205 | 1200 | 1190 | 1185 | 1180 |
| | D | High | 1405 | 1405 | 1405 | 1370 | 1365 | 1355 | 1345 | 1335 | 1330 |
| AVPTC39C14AC | A | Low | 715 | 695 | 680 | 685 | 685 | 680 | 675 | 665 | 650 |
| | B | Low | 755 | 770 | 780 | 780 | 780 | 780 | 770 | 765 | 755 |
| | C | Low | 780 | 790 | 795 | 805 | 800 | 800 | 795 | 805 | 795 |
| | D | Low | 875 | 885 | 890 | 890 | 890 | 890 | 885 | 880 | 875 |
| | A | High | 960 | 960 | 965 | 970 | 965 | 965 | 960 | 955 | 950 |
| | B | High | 1120 | 1115 | 1115 | 1115 | 1120 | 1115 | 1115 | 1110 | 1105 |
| | C | High | 1180 | 1180 | 1175 | 1175 | 1175 | 1175 | 1170 | 1165 | 1160 |
| | D | High | 1325 | 1320 | 1315 | 1315 | 1310 | 1310 | 1310 | 1305 | 1300 |
| AVPTC42D14 | A | Low | 600 | 580 | 560 | 545 | 535 | 520 | 505 | 500 | 490 |
| | B | Low | 795 | 780 | 765 | 750 | 740 | 730 | 720 | 715 | 710 |
| | C | Low | 1025 | 1010 | 995 | 985 | 970 | 960 | 950 | 945 | 940 |
| | D | Low | 1250 | 1235 | 1225 | 1215 | 1210 | 1200 | 1195 | 1190 | 1185 |
| | A | High | 835 | 815 | 800 | 790 | 780 | 765 | 755 | 750 | 745 |
| | B | High | 1115 | 1105 | 1090 | 1080 | 1070 | 1065 | 1055 | 1050 | 1045 |
| | C | High | 1445 | 1430 | 1420 | 1410 | 1405 | 1395 | 1390 | 1385 | 1380 |
| | D | High | 1775 | 1760 | 1750 | 1740 | 1735 | 1725 | 1720 | 1715 | 1710 |
| AVPTC48C14 | A | Low | 510 | 505 | 500 | 490 | 485 | 480 | 475 | 465 | 455 |
| | B | Low | 710 | 705 | 700 | 690 | 680 | 680 | 670 | 660 | 650 |
| | C | Low | 940 | 935 | 930 | 920 | 910 | 910 | 905 | 890 | 880 |
| | D | Low | 1165 | 1160 | 1160 | 1155 | 1150 | 1145 | 1140 | 1135 | 1125 |
| | A | High | 735 | 730 | 725 | 715 | 705 | 700 | 695 | 685 | 675 |
| | B | High | 1010 | 1005 | 1000 | 990 | 985 | 980 | 975 | 965 | 955 |
| | C | High | 1340 | 1335 | 1330 | 1320 | 1310 | 1310 | 1305 | 1290 | 1280 |
| | D | High | 1675 | 1665 | 1660 | 1645 | 1635 | 1630 | 1620 | 1605 | 1590 |

| Model | Speed Tap | | 0.1 | 0.2 | 0.3 | 0.4 | 0.5 | 0.6 | 0.7 | 0.8 | 0.9 |
|---|---|---|---|---|---|---|---|---|---|---|---|
| AVPTC48D14 | A | Low | 910 | 910 | 900 | 895 | 885 | 880 | 875 | 870 | 850 |
| | B | Low | 1050 | 1045 | 1035 | 1030 | 1025 | 1020 | 1015 | 1010 | 1010 |
| | C | Low | 1155 | 1145 | 1140 | 1135 | 1130 | 1125 | 1120 | 1120 | 1115 |
| | D | Low | 1215 | 1210 | 1200 | 1195 | 1190 | 1185 | 1180 | 1175 | 1170 |
| | A | High | 1370 | 1360 | 1350 | 1345 | 1340 | 1330 | 1325 | 1325 | 1320 |
| | B | High | 1570 | 1560 | 1550 | 1545 | 1535 | 1530 | 1525 | 1520 | 1515 |
| | C | High | 1720 | 1710 | 1700 | 1695 | 1685 | 1680 | 1670 | 1670 | 1665 |
| | D | High | 1840 | 1820 | 1800 | 1785 | 1775 | 1760 | 1745 | 1740 | 1735 |
| AVPTC49C14AC | A | Low | 705 | 710 | 725 | 735 | 740 | 740 | 740 | 735 | 730 |
| | B | Low | 730 | 745 | 760 | 770 | 775 | 775 | 775 | 770 | 765 |
| | C | Low | 850 | 865 | 870 | 875 | 880 | 880 | 875 | 870 | 865 |
| | D | Low | 950 | 955 | 960 | 965 | 965 | 965 | 965 | 960 | 955 |
| | A | High | 1030 | 1040 | 1040 | 1045 | 1045 | 1045 | 1045 | 1040 | 1035 |
| | B | High | 1090 | 1095 | 1095 | 1095 | 1095 | 1095 | 1095 | 1090 | 1085 |
| | C | High | 1290 | 1290 | 1280 | 1285 | 1280 | 1280 | 1275 | 1275 | 1270 |
| | D | High | 1425 | 1425 | 1420 | 1420 | 1415 | 1410 | 1410 | 1405 | 1400 |
| AVPTC49D14AB | A | Low | 795 | 815 | 820 | 820 | 810 | 800 | 785 | 785 | 770 |
| | B | Low | 870 | 890 | 895 | 895 | 890 | 875 | 865 | 850 | 850 |
| | C | Low | 985 | 990 | 995 | 995 | 990 | 980 | 970 | 955 | 940 |
| | D | Low | 1040 | 1055 | 1055 | 1055 | 1045 | 1035 | 1025 | 1020 | 1005 |
| | A | High | 1195 | 1195 | 1195 | 1200 | 1195 | 1185 | 1175 | 1165 | 1155 |
| | B | High | 1325 | 1320 | 1320 | 1315 | 1315 | 1305 | 1295 | 1285 | 1275 |
| | C | High | 1460 | 1460 | 1455 | 1455 | 1455 | 1450 | 1440 | 1430 | 1420 |
| | D | High | 1520 | 1530 | 1530 | 1530 | 1530 | 1525 | 1515 | 1510 | 1495 |
| AVPTC59C14AC | A | Low | 635 | 620 | 610 | 600 | 600 | 600 | 600 | 600 | 600 |
| | B | Low | 790 | 805 | 810 | 810 | 805 | 805 | 795 | 810 | 800 |
| | C | Low | 930 | 940 | 940 | 935 | 930 | 925 | 920 | 915 | 905 |
| | D | Low | 1065 | 1065 | 1070 | 1065 | 1060 | 1050 | 1045 | 1035 | 1030 |
| | A | High | 870 | 880 | 875 | 875 | 870 | 865 | 860 | 860 | 845 |
| | B | High | 1230 | 1230 | 1225 | 1220 | 1210 | 1205 | 1200 | 1190 | 1180 |
| | C | High | 1420 | 1410 | 1410 | 1405 | 1395 | 1385 | 1380 | 1380 | 1370 |
| | D | High | 1615 | 1600 | 1595 | 1595 | 1585 | 1580 | 1570 | 1565 | 1555 |
| AVPTC59D14AC | A | Low | 1030 | 1035 | 1040 | 1040 | 1030 | 1025 | 1015 | 995 | 970 |
| | B | Low | 1260 | 1260 | 1260 | 1260 | 1260 | 1250 | 1245 | 1235 | 1225 |
| | C | Low | 1330 | 1335 | 1330 | 1330 | 1325 | 1320 | 1315 | 1305 | 1295 |
| | D | Low | 1395 | 1395 | 1395 | 1390 | 1390 | 1385 | 1375 | 1365 | 1355 |
| | A | High | 1450 | 1445 | 1445 | 1435 | 1430 | 1425 | 1420 | 1410 | 1395 |
| | B | High | 1795 | 1790 | 1790 | 1785 | 1775 | 1765 | 1760 | 1750 | 1745 |
| | C | High | 1890 | 1890 | 1890 | 1880 | 1870 | 1865 | 1855 | 1850 | 1840 |
| | D | High | 1995 | 1995 | 1990 | 1985 | 1985 | 1975 | 1965 | 1955 | 1945 |
| AVPTC60D14 | A | Low | 1205 | 1205 | 1210 | 1205 | 1205 | 1200 | 1195 | 1195 | 1195 |
| | B | Low | 1375 | 1370 | 1365 | 1360 | 1360 | 1355 | 1355 | 1350 | 1350 |
| | C | Low | 1445 | 1445 | 1450 | 1445 | 1445 | 1440 | 1440 | 1440 | 1435 |
| | D | Low | 1535 | 1530 | 1525 | 1520 | 1520 | 1515 | 1510 | 1510 | 1510 |
| | A | High | 1615 | 1615 | 1610 | 1610 | 1605 | 1605 | 1600 | 1600 | 1600 |
| | B | High | 1825 | 1820 | 1815 | 1810 | 1810 | 1805 | 1805 | 1805 | 1800 |
| | C | High | 1930 | 1925 | 1920 | 1915 | 1915 | 1910 | 1905 | 1905 | 1900 |
| | D | High | 2040 | 2030 | 2025 | 2020 | 2015 | 2010 | 2005 | 2005 | 2000 |

Note: When applying a humidistat (normally closed), refer to the installation and operating instructions. The humidistat can adjust the cooling airflow to 85%.

| Model | Speed Tap | | 0.1 | 0.2 | 0.3 | 0.4 | 0.5 | 0.6 | 0.7 | 0.8 | 0.9 |
|---|---|---|---|---|---|---|---|---|---|---|---|
| AVPTC61D14AC | A | Low | 1080 | 1085 | 1080 | 1085 | 1080 | 1075 | 1070 | 1065 | 1055 |
| | B | Low | 1200 | 1200 | 1210 | 1210 | 1210 | 1210 | 1205 | 1205 | 1200 |
| | C | Low | 1290 | 1290 | 1280 | 1275 | 1280 | 1280 | 1270 | 1265 | 1265 |
| | D | Low | 1360 | 1355 | 1350 | 1355 | 1350 | 1345 | 1340 | 1340 | 1330 |
| | A | High | 1630 | 1630 | 1630 | 1625 | 1620 | 1615 | 1610 | 1600 | 1590 |
| | B | High | 1820 | 1820 | 1820 | 1815 | 1805 | 1795 | 1785 | 1780 | 1770 |
| | C | High | 1935 | 1930 | 1925 | 1920 | 1905 | 1900 | 1890 | 1875 | 1865 |
| | D | High | 2035 | 2030 | 2025 | 2020 | 2005 | 1995 | 1985 | 1960 | 1955 |

Note: When applying a humidistat (normally closed), refer to the installation and operating instructions. The humidistat can adjust the cooling airflow to 85%.

| HTR kW | 9 | 10 | 11 | AVPTC 24B14 | AVPTC 25B14 | AVPTC 29B14 | AVPTC 31C14 | AVPTC 33C14 | AVPTC 35B14 | AVPTC 37B14 | AVPTC 37C14 | AVPTC 37D14 | AVPTC 39C14 |
|---|---|---|---|---|---|---|---|---|---|---|---|---|---|
| 3 | ON | ON | ON | 730 | 550 | 550 | 600 | 600 | 550 | 550 | --- | --- | --- |
| 5 | ON | ON | OFF | 780 | 650 | 650 | 850 | 700 | 660 | 650 | 850 | 1240 | 850 |
| 6 | ON | OFF | ON | 850 | 700 | 700 | 900 | 750 | 700 | 700 | 900 | 1240 | 900 |
| 8 | ON | OFF | OFF | 950 | 800 | 800 | 1000 | 875 | 800 | 800 | 1000 | 1240 | 1000 |
| 10 | OFF | ON | ON | 1025 | 850 | 875 | 1170 | 950 | 875 | 875 | 1170 | 1240 | 1170 |
| 15 | OFF | ON | OFF | NR | 875 | 875 | 1345 | 950 | 875 | 1050 | 1345 | 1520 | 1345 |
| 19* | OFF | OFF | ON | NR | --- | --- | 1345 | --- | --- | --- | 1345 | --- | 1345 |
| 20 | | | | NR | --- | --- | --- | --- | --- | --- | --- | 1520 | --- |
| 21 or 25* | OFF | OFF | OFF | NR | --- | --- | --- | --- | --- | --- | --- | --- | --- |

Note: Airflow data shown applies to the electric heat only in either legacy mode or communicating mode operation

--- indicates Not Rated

* Within thermostat user menu, CTK0* communicating thermostat will display 20kW for OFF- OFF- ON dipswitch selection, 21kW for OFF-OFF-OFF dipswitch selection.

† For match up with a 2 ton outdoor unit: Heater kit application shall not exceed 10 kW. Airflow for 5 kW up to 10 kW heater kits shall be set to 850 cfm speed tap of ON-ON-ON.

†† For match up with a 3 ton outdoor unit: Heater kit application shall not exceed 15 kW. Airflow for 5 kW up to 15 kW heater kits shall be set to 1300 cfm speed tap of ON-OFF-ON.

††† For match up with a 3.5 ton outdoor unit: Heater kit application shall not exceed 20 kW. Airflow for 5 kW up to 20 kW heater kits shall be set to 1500 cfm speed tap of ON-OFF-OFF

** 3 kW heater kit is not applicable for this indoor application.

| HTR kW | 9 | 10 | 11 | AVPTC 42D14† | AVPTC 48C14 | AVPTC 48D14†† | AVPTC 49C14 | AVPTC 49D14 ŁŁ | AVPTC 59C14 | AVPT C59D14 | AVPTC 60D14††† | AVPTC 61D14 ŁŁŁ |
|---|---|---|---|---|---|---|---|---|---|---|---|---|
| 3 | ON | ON | ON | 850** | NR | NR | --- | --- | --- | --- | NR | --- |
| 5 | ON | ON | OFF | 1400 | 850 | 1400 | 1170 | 1250 | 1170 | 1240 | 1620 | 1250 |
| 6 | ON | OFF | ON | 1630 | 900 | 1630 | 1170 | 1300 | 1170 | 1240 | 1670 | 1300 |
| 8 | ON | OFF | OFF | 1630 | 1000 | 1630 | 1170 | 1500 | 1170 | 1240 | 1720 | 1500 |
| 10 | OFF | ON | ON | 1670 | 1200 | 1670 | 1170 | 1550 | 1170 | 1240 | 1750 | 1550 |
| 15 | OFF | ON | OFF | 1720 | 1440 | 1720 | 1345 | 1720 | 1345 | 1520 | 1780 | 1780 |
| 19* | OFF | OFF | ON | NR | 1500 | NR | 1345 | --- | 1345 | --- | NR | --- |
| 20 | | | | 1800 | 1500 | 1815 | --- | --- | --- | 1520 | 1850 | 1850 |
| 21 or 25* | OFF | OFF | OFF | NR | NR | 1850 | --- | --- | --- | --- | 1850 | 1850 |

Note: Airflow data shown applies to the electric heat only in either legacy mode or communicating mode operation

--- indicates Not Rated

* Within thermostat user menu, CTK0* communicating thermostat will display 20kW for OFF- OFF- ON dipswitch selection, 21kW for OFF-OFF-OFF dipswitch selection.

† For match up with a 2 ton outdoor unit: Heater kit application shall not exceed 10 kW. Airflow for 5 kW up to 10 kW heater kits shall be set to 850 cfm speed tap of ON-ON-ON.

†† For match up with a 3 ton outdoor unit: Heater kit application shall not exceed 15 kW. Airflow for 5 kW up to 15 kW heater kits shall be set to 1300 cfm speed tap of ON-OFF-ON.

††† For match up with a 3.5 ton outdoor unit: Heater kit application shall not exceed 20 kW. Airflow for 5 kW up to 20 kW heater kits shall be set to 1500 cfm speed tap of ON-OFF-OFF

** 3 kW heater kit is not applicable for this indoor application.

| Heater Kit Model | | Circuit 1 | | | Circuit 2 | | | Single-Point Kit | |
|---|---|---|---|---|---|---|---|---|---|
| | | Heater Amps | MCA[1] | MOP[2] | Heater Amps | MCA[1] | MOP[2] | MCA[1] | MOP[2] |
| **AVPTC25B14AB** | | 0/0 | 4.9/4.9 | 15/15 | --- | --- | --- | --- | --- |
| HKSX03XC - 208 V | No Breaker | 10.8 | 18.4 | 20 | --- | --- | --- | --- | --- |
| HKSX05XC - 208 V | | 17.3 | 27 | 30 | --- | --- | --- | --- | --- |
| HKSX06XC - 208 V | | 21.7 | 32 | 35 | --- | --- | --- | --- | --- |
| HKSX08XC - 208 V | | 28.9 | 41 | 45 | --- | --- | --- | --- | --- |
| HKSX10XC - 208 V | | 34.7 | 48 | 50 | --- | --- | --- | --- | --- |
| HKSC05XC - 208 V | Breaker | 17.3 | 27 | 30 | --- | --- | --- | --- | --- |
| HKSC08XC - 208 V | | 28.9 | 41 | 45 | --- | --- | --- | --- | --- |
| HKSC10XC - 208 V | | 34.7 | 48 | 50 | --- | --- | --- | --- | --- |
| HKSC15XA - 208 V | | 34.7 | 48 | 50 | 17.3 | 21.7 | 25 | 69.9 | 70 |
| HKSX03XC - 240 V | No Breaker | 12.5 | 21 | 25 | --- | --- | --- | --- | --- |
| HKSX05XC - 240 V | | 20 | 29.9 | 30 | --- | --- | --- | --- | --- |
| HKSX06XC - 240 V | | 25 | 36.1 | 40 | --- | --- | --- | --- | --- |
| HKSX08XC - 240 V | | 33.3 | 46.5 | 50 | --- | --- | --- | --- | --- |
| HKSX10XC - 240 V | | 40 | 54.9 | 60 | --- | --- | --- | --- | --- |
| HKSC05XC - 240 V | Breaker | 20 | 29.9 | 30 | --- | --- | --- | --- | --- |
| HKSC08XC - 240 V | | 33.3 | 46.5 | 50 | --- | --- | --- | --- | --- |
| HKSC10XC - 240 V | | 40 | 54.9 | 60 | --- | --- | --- | --- | --- |
| HKSC15XB - 240 V | | 40 | 54.9 | 60 | 20 | 25 | 25 | 79.9 | 80 |
| **AVPTC29B14AB** | | 0/0 | 6.5/6.5 | 15/15 | --- | --- | --- | --- | --- |
| HKSX03XC - 208 V | No Breaker | 10.8 | 20 | 20 | --- | --- | --- | --- | --- |
| HKSX05XC - 208 V | | 17.3 | 28.2 | 30 | --- | --- | --- | --- | --- |
| HKSX06XC - 208 V | | 21.7 | 33.6 | 35 | --- | --- | --- | --- | --- |
| HKSX08XC - 208 V | | 28.9 | 42.6 | 45 | --- | --- | --- | --- | --- |
| HKSX10XC - 208 V | | 34.7 | 49.8 | 50 | --- | --- | --- | --- | --- |
| HKSC05XC - 208 V | Breaker | 17.3 | 28.2 | 30 | --- | --- | --- | --- | --- |
| HKSC08XC - 208 V | | 28.9 | 42.6 | 45 | --- | --- | --- | --- | --- |
| HKSC10XC - 208 V | | 34.7 | 49.8 | 50 | --- | --- | --- | --- | --- |
| HKSC15XA - 208 V | | 34.7 | 49.8 | 50 | 17.3 | 21.7 | 25 | 71.5 | 80 |
| HKSX03XC - 240 V | No Breaker | 12.5 | 22.1 | 25 | --- | --- | --- | --- | --- |
| HKSX05XC - 240 V | | 20 | 32 | 35 | --- | --- | --- | --- | --- |
| HKSX06XC - 240 V | | 25 | 38 | 40 | --- | --- | --- | --- | --- |
| HKSX08XC - 240 V | | 33.3 | 48 | 50 | --- | --- | --- | --- | --- |
| HKSX10XC - 240 V | | 40 | 57 | 60 | --- | --- | --- | --- | --- |
| HKSC05XC - 240 V | Breaker | 20 | 32 | 35 | --- | --- | --- | --- | --- |
| HKSC08XC - 240 V | | 33.3 | 48 | 50 | --- | --- | --- | --- | --- |
| HKSC10XC - 240 V | | 40 | 57 | 60 | --- | --- | --- | --- | --- |
| HKSC15XB - 240 V | | 40 | 57 | 60 | 20 | 25 | 25 | 81.5 | 90 |
| **AVPTC30C14AB** | | 0.0/0.0 | 4.9/4.9 | 15/15 | --- | --- | --- | --- | --- |
| HKSX03XC - 208 V | No Breaker | 10.8 | 18 | 20 | --- | --- | --- | --- | --- |
| HKSX05XC - 208 V | | 17.3 | 27 | 30 | --- | --- | --- | --- | --- |
| HKSX06XC - 208 V | | 21.7 | 32 | 35 | --- | --- | --- | --- | --- |
| HKSX08XC - 208 V | | 28.9 | 41 | 45 | --- | --- | --- | --- | --- |
| HKSX10XC - 208 V | | 34.7 | 48 | 50 | --- | --- | --- | --- | --- |

See notes on page 19.

| Heater Kit Model | | Circuit 1 | | | Circuit 2 | | | Single-Point Kit | |
|---|---|---|---|---|---|---|---|---|---|
| | | Heater Amps | MCA[1] | MOP[2] | Heater Amps | MCA[1] | MOP[2] | MCA[1] | MOP[2] |
| HKSC05XC - 208 V | Breaker | 17.3 | 27 | 30 | --- | --- | --- | --- | --- |
| HKSC08XC - 208 V | | 28.9 | 41 | 45 | --- | --- | --- | --- | --- |
| HKSC10XC - 208 V | | 34.7 | 48 | 50 | --- | --- | --- | --- | --- |
| HKSX03XC - 240 V | No Breaker | 12.5 | 21 | 25 | --- | --- | --- | --- | --- |
| HKSX05XC - 240 V | | 20.0 | 30 | 30 | --- | --- | --- | --- | --- |
| HKSX06XC - 240 V | | 25.0 | 36 | 40 | --- | --- | --- | --- | --- |
| HKSX08XC - 240 V | | 33.3 | 47 | 50 | --- | --- | --- | --- | --- |
| HKSX10XC - 240 V | | 40.0 | 55 | 60 | --- | --- | --- | --- | --- |
| HKSC05XC - 240 V | Breaker | 20.0 | 30 | 30 | --- | --- | --- | --- | --- |
| HKSC08XC - 240 V | | 33.3 | 47 | 50 | --- | --- | --- | --- | --- |
| HKSC10XC - 240 V | | 40.0 | 55 | 60 | --- | --- | --- | --- | --- |
| **AVPTC31C14AD** | | 0/0 | 6.5/6.5 | 15/15 | --- | --- | --- | --- | --- |
| HKSX03XC - 208 V | No Breaker | 10.8 | 20 | 20 | --- | --- | --- | --- | --- |
| HKSX05XC - 208 V | | 17.3 | 28.2 | 30 | --- | --- | --- | --- | --- |
| HKSX06XC - 208 V | | 21.7 | 33.6 | 35 | --- | --- | --- | --- | --- |
| HKSX08XC - 208 V | | 28.9 | 42.6 | 45 | --- | --- | --- | --- | --- |
| HKSX10XC - 208 V | | 34.7 | 49.8 | 50 | --- | --- | --- | --- | --- |
| HKSC05XC - 208 V | Breaker | 17.3 | 28.2 | 30 | --- | --- | --- | --- | --- |
| HKSC08XC - 208 V | | 28.9 | 42.6 | 45 | --- | --- | --- | --- | --- |
| HKSC10XC - 208 V | | 34.7 | 49.8 | 50 | --- | --- | --- | --- | --- |
| HKSC15XA - 208 V | | 34.7 | 49.8 | 50 | 17.3 | 21.7 | 25 | 71.5 | 80 |
| HKSC19CA - 208 V | | 34.7 | 49.8 | 50 | 34.7 | 43.3 | 45 | 93.2 | 100 |
| HKSC15XF - 208 V ^ | | 0 | 6.5 | 15 | 30 | 37.5 | 40 | --- | --- |
| HKSX03XC - 240 V | No Breaker | 12.5 | 22.1 | 25 | --- | --- | --- | --- | --- |
| HKSX05XC - 240 V | | 20 | 32 | 35 | --- | --- | --- | --- | --- |
| HKSX06XC - 240 V | | 25 | 38 | 40 | --- | --- | --- | --- | --- |
| HKSX08XC - 240 V | | 33.3 | 48 | 50 | --- | --- | --- | --- | --- |
| HKSX10XC - 240 V | | 40 | 57 | 60 | --- | --- | --- | --- | --- |
| HKSC05XC - 240 V | Breaker | 20 | 32 | 35 | --- | --- | --- | --- | --- |
| HKSC08XC - 240 V | | 33.3 | 48 | 50 | --- | --- | --- | --- | --- |
| HKSC10XC - 240 V | | 40 | 57 | 60 | --- | --- | --- | --- | --- |
| HKSC15XB - 240 V | | 40 | 56.5 | 60 | 20 | 25 | 25 | 81.5 | 90 |
| HKSC19CB - 240 V | | 40 | 56.5 | 60 | 40 | 50 | 50 | 107 | 110 |
| HKSC15XF - 240 V ^ | | 0 | 6.5 | 15 | 34.6 | 43 | 45 | --- | --- |
| **AVPTC33C14AB** | | 0.0/0.0 | 4.9/4.9 | 15/15 | --- | --- | --- | --- | --- |
| HKSX03XC - 208 V | No Breaker | 10.8 | 18.4 | 20 | --- | --- | --- | --- | --- |
| HKSX05XC - 208 V | | 17.3 | 27 | 30 | --- | --- | --- | --- | --- |
| HKSX06XC - 208 V | | 21.7 | 32 | 35 | --- | --- | --- | --- | --- |
| HKSX08XC - 208 V | | 28.9 | 41 | 45 | --- | --- | --- | --- | --- |
| HKSX10XC - 208 V | | 34.7 | 48 | 50 | --- | --- | --- | --- | --- |
| HKSC05XC - 208 V | Breaker | 17.3 | 27 | 30 | --- | --- | --- | --- | --- |
| HKSC08XC - 208 V | | 21.7 | 32 | 35 | --- | --- | --- | --- | --- |
| HKSC10XC - 208 V | | 28.9 | 41 | 45 | --- | --- | --- | --- | --- |
| HKSC15XA - 208 V | | 34.7 | 48 | 50 | 17.3 | 21.7 | 25 | 69.9 | 70 |

See notes on page 19.

| Heater Kit Model | | Circuit 1 | | | Circuit 2 | | | Single-Point Kit | |
|---|---|---|---|---|---|---|---|---|---|
| | | Heater Amps | MCA[1] | MOP[2] | Heater Amps | MCA[1] | MOP[2] | MCA[1] | MOP[2] |
| HKSX03XC - 240 V | No Breaker | 12.5 | 21 | 25 | --- | --- | --- | --- | --- |
| HKSX05XC - 240 V | | 20 | 29.9 | 30 | --- | --- | --- | --- | --- |
| HKSX06XC - 240 V | | 25 | 36.1 | 40 | --- | --- | --- | --- | --- |
| HKSX08XC - 240 V | | 33.3 | 46.5 | 50 | --- | --- | --- | --- | --- |
| HKSX10XC - 240 V | | 40 | 54.9 | 60 | --- | --- | --- | --- | --- |
| HKSC05XC - 240 V | Breaker | 20 | 29.9 | 30 | --- | --- | --- | --- | --- |
| HKSC08XC - 240 V | | 33.3 | 46.5 | 50 | --- | --- | --- | --- | --- |
| HKSC10XC - 240 V | | 40 | 54.9 | 60 | --- | --- | --- | --- | --- |
| HKSC15XB - 240 V | | 40 | 54.9 | 60 | 20 | 25 | 25 | 79.9 | 80 |
| **AVPTC35C14AA** | | 0/0 | 4.9/4.9 | 15/15 | --- | --- | --- | --- | --- |
| HKSX03XC - 208 V | No Breaker | 10.8 | 18.4 | 20 | --- | --- | --- | --- | --- |
| HKSX05XC - 208 V | | 17.3 | 27 | 30 | --- | --- | --- | --- | --- |
| HKSX06XC - 208 V | | 21.7 | 32 | 35 | --- | --- | --- | --- | --- |
| HKSX08XC - 208 V | | 28.9 | 41 | 45 | --- | --- | --- | --- | --- |
| HKSX10XC - 208 V | | 34.7 | 48 | 50 | --- | --- | --- | --- | --- |
| HKSC05XC - 208 V | Breaker | 17.3 | 27 | 30 | --- | --- | --- | --- | --- |
| HKSC08XC - 208 V | | 28.9 | 41 | 45 | --- | --- | --- | --- | --- |
| HKSC10XC - 208 V | | 34.7 | 48 | 50 | --- | --- | --- | --- | --- |
| HKSC15XA - 208 V | | 34.7 | 48 | 50 | 17.3 | 21.7 | 25 | 69.9 | 70 |
| HKSX03XC - 240 V | No Breaker | 12.5 | 21 | 25 | --- | --- | --- | --- | --- |
| HKSX05XC - 240 V | | 20 | 29.9 | 30 | --- | --- | --- | --- | --- |
| HKSX06XC - 240 V | | 25 | 36.1 | 40 | --- | --- | --- | --- | --- |
| HKSX08XC - 240 V | | 33.3 | 46.5 | 50 | --- | --- | --- | --- | --- |
| HKSX10XC - 240 V | | 40 | 54.9 | 60 | --- | --- | --- | --- | --- |
| HKSC05XC - 240 V | Breaker | 20 | 29.9 | 30 | --- | --- | --- | --- | --- |
| HKSC08XC - 240 V | | 33.3 | 46.5 | 50 | --- | --- | --- | --- | --- |
| HKSC10XC - 240 V | | 40 | 54.9 | 60 | --- | --- | --- | --- | --- |
| HKSC15XB - 240 V | | 40 | 54.9 | 60 | 20 | 25 | 25 | 79.9 | 80 |
| **AVPTC36C14AA** | | 0.0/0.0 | 6.5/6.5 | 15/15 | --- | --- | --- | --- | --- |
| HKSX03XC - 208 V | No Breaker | 10.8 | 20 | 20 | --- | --- | --- | --- | --- |
| HKSX05XC - 208 V | | 17.3 | 28 | 30 | --- | --- | --- | --- | --- |
| HKSX06XC - 208 V | | 21.7 | 34 | 35 | --- | --- | --- | --- | --- |
| HKSX08XC - 208 V | | 28.9 | 43 | 45 | --- | --- | --- | --- | --- |
| HKSX10XC - 208 V | | 34.7 | 50 | 50 | --- | --- | --- | --- | --- |
| HKSC05XC - 208 V | Breaker | 17.3 | 28 | 30 | --- | --- | --- | --- | --- |
| HKSC08XC - 208 V | | 28.9 | 43 | 45 | --- | --- | --- | --- | --- |
| HKSC10XC - 208 V | | 34.7 | 50 | 50 | --- | --- | --- | --- | --- |
| HKSC15XA - 208 V | | 34.7 | 50 | 50 | 17.3 | 22 | 25 | 72 | 80 |
| HKSC19CA - 208 V | | 34.7 | 50 | 50 | 34.7 | 43 | 45 | 93 | 100 |
| HKSC15XF - 208 V ^ | | 0.0 | 6.5 | 15 | 30.0 | 38 | 40 | --- | --- |
| HKSC20XF - 208 V ^ | | 0.0 | 6.5 | 15 | 37.5 | 47 | 50 | --- | --- |

See notes on page 19.

| Heater Kit Model | | Circuit 1 | | | Circuit 2 | | | Single-Point Kit | |
|---|---|---|---|---|---|---|---|---|---|
| | | Heater Amps | MCA[1] | MOP[2] | Heater Amps | MCA[1] | MOP[2] | MCA[1] | MOP[2] |
| HKSX03XC - 240 V | No Breaker | 12.5 | 22 | 25 | --- | --- | --- | --- | --- |
| HKSX05XC - 240 V | No Breaker | 20.0 | 32 | 35 | --- | --- | --- | --- | --- |
| HKSX06XC - 240 V | No Breaker | 25.0 | 38 | 40 | --- | --- | --- | --- | --- |
| HKSX08XC - 240 V | No Breaker | 33.3 | 48 | 50 | --- | --- | --- | --- | --- |
| HKSX10XC - 240 V | No Breaker | 40.0 | 57 | 60 | --- | --- | --- | --- | --- |
| HKSC05XC - 240 V | Breaker | 20.0 | 32 | 35 | --- | --- | --- | --- | --- |
| HKSC08XC - 240 V | Breaker | 33.3 | 48 | 50 | --- | --- | --- | --- | --- |
| HKSC10XC - 240 V | Breaker | 40.0 | 57 | 60 | --- | --- | --- | --- | --- |
| HKSC15XB - 240 V | Breaker | 40.0 | 57 | 60 | 20.0 | 25 | 25 | 82 | 90 |
| HKSC19CB - 240 V | Breaker | 40.0 | 57 | 60 | 40 | 50 | 50 | 107 | 110 |
| HKSC15XF - 240 V ^ | Breaker | 0.0 | 6.5 | 15 | 34.6 | 43 | 45 | --- | --- |
| HKSC20XF - 240 ^ | Breaker | 0.0 | 6.5 | 15 | 43.3 | 54 | 60 | --- | --- |
| **AVPTC37B14AB** | | 0/0 | 6.5/6.5 | 15/15 | --- | --- | --- | --- | --- |
| HKSX03XC - 208 V | No Breaker | 10.8 | 20 | 20 | --- | --- | --- | --- | --- |
| HKSX05XC - 208 V | No Breaker | 17.3 | 28.2 | 30 | --- | --- | --- | --- | --- |
| HKSX06XC - 208 V | No Breaker | 21.7 | 33.6 | 35 | --- | --- | --- | --- | --- |
| HKSX08XC - 208 V | No Breaker | 28.9 | 42.6 | 45 | --- | --- | --- | --- | --- |
| HKSX10XC - 208 V | No Breaker | 34.7 | 49.8 | 50 | --- | --- | --- | --- | --- |
| HKSC05XC - 208 V | Breaker | 17.3 | 28.2 | 30 | --- | --- | --- | --- | --- |
| HKSC08XC - 208 V | Breaker | 28.9 | 42.6 | 45 | --- | --- | --- | --- | --- |
| HKSC10XC - 208 V | Breaker | 34.7 | 49.8 | 50 | --- | --- | --- | --- | --- |
| HKSC15XA - 208 V | Breaker | 34.7 | 49.8 | 50 | 17.3 | 21.7 | 25 | 71.5 | 80 |
| HKSX03XC - 240 V | No Breaker | 12.5 | 22.1 | 25 | --- | --- | --- | --- | --- |
| HKSX05XC - 240 V | No Breaker | 20 | 32 | 35 | --- | --- | --- | --- | --- |
| HKSX06XC - 240 V | No Breaker | 25 | 38 | 40 | --- | --- | --- | --- | --- |
| HKSX08XC - 240 V | No Breaker | 33.3 | 48 | 50 | --- | --- | --- | --- | --- |
| HKSX10XC - 240 V | No Breaker | 40 | 57 | 60 | --- | --- | --- | --- | --- |
| HKSC05XC - 240 V | Breaker | 20 | 32 | 35 | --- | --- | --- | --- | --- |
| HKSC08XC - 240 V | Breaker | 33.3 | 48 | 50 | --- | --- | --- | --- | --- |
| HKSC10XC - 240 V | Breaker | 40 | 57 | 60 | --- | --- | --- | --- | --- |
| HKSC15XB - 240 V | Breaker | 40 | 57 | 60 | 20 | 25 | 25 | 81.5 | 90 |
| **AVPTC37C14AC** | | 0/0 | 6.5/6.5 | 15/15 | --- | --- | --- | --- | --- |
| HKSX03XC - 208 V | No Breaker | --- | --- | --- | --- | --- | --- | --- | --- |
| HKSX05XC - 208 V | No Breaker | 17.3 | 28.2 | 30 | --- | --- | --- | --- | --- |
| HKSX06XC - 208 V | No Breaker | 21.7 | 33.6 | 35 | --- | --- | --- | --- | --- |
| HKSX08XC - 208 V | No Breaker | 28.9 | 42.6 | 45 | --- | --- | --- | --- | --- |
| HKSX10XC - 208 V | No Breaker | 34.7 | 49.8 | 50 | --- | --- | --- | --- | --- |
| HKSC05XC - 208 V | Breaker | 17.3 | 28.2 | 30 | --- | --- | --- | --- | --- |
| HKSC08XC - 208 V | Breaker | 28.9 | 42.6 | 45 | --- | --- | --- | --- | --- |
| HKSC10XC - 208 V | Breaker | 34.7 | 49.8 | 50 | --- | --- | --- | --- | --- |
| HKSC15XA - 208 V | Breaker | 34.7 | 49.8 | 50 | 17.3 | 21.7 | 25 | 71.5 | 80 |
| HKSC19CA - 208 V | Breaker | 34.7 | 49.8 | 50 | 34.7 | 43.3 | 45 | 93.2 | 100 |
| HKSC15XF - 208 V ^ | Breaker | 0 | 6.5 | 15 | 30 | 37.5 | 40 | --- | --- |

See notes on page 19.

| Heater Kit Model | | Circuit 1 | | | Circuit 2 | | | Single-Point Kit | |
|---|---|---|---|---|---|---|---|---|---|
| | | Heater Amps | MCA[1] | MOP[2] | Heater Amps | MCA[1] | MOP[2] | MCA[1] | MOP[2] |
| HKSX03XC - 240 V | No Breaker | --- | --- | --- | --- | --- | --- | --- | --- |
| HKSX05XC - 240 V | No Breaker | 20 | 32 | 35 | --- | --- | --- | --- | --- |
| HKSX06XC - 240 V | No Breaker | 25 | 38 | 40 | --- | --- | --- | --- | --- |
| HKSX08XC - 240 V | No Breaker | 33.3 | 48 | 50 | --- | --- | --- | --- | --- |
| HKSX10XC - 240 V | No Breaker | 40 | 57 | 60 | --- | --- | --- | --- | --- |
| HKSC05XC - 240 V | Breaker | 20 | 32 | 35 | --- | --- | --- | --- | --- |
| HKSC08XC - 240 V | Breaker | 33.3 | 48 | 50 | --- | --- | --- | --- | --- |
| HKSC10XC - 240 V | Breaker | 40 | 57 | 60 | --- | --- | --- | --- | --- |
| HKSC15XB - 240 V | Breaker | 40 | 57 | 60 | 20 | 25 | 25 | 81.5 | 90 |
| HKSC19CB - 240 V | Breaker | 40 | 57 | 60 | 40 | 50 | 50 | 106.5 | 110 |
| HKSC15XF - 240 V ^ | Breaker | 0 | 6.5 | 15 | 34.6 | 43 | 45 | --- | --- |
| **AVPTC37D14AC** | | 0/0 | 6.5/6.5 | 15/15 | --- | --- | --- | --- | --- |
| HKSX03XC - 208 V | No Breaker | --- | --- | --- | --- | --- | --- | --- | --- |
| HKSX05XC - 208 V | No Breaker | 17.3 | 28.2 | 30 | --- | --- | --- | --- | --- |
| HKSX06XC - 208 V | No Breaker | 21.7 | 33.6 | 35 | --- | --- | --- | --- | --- |
| HKSX08XC - 208 V | No Breaker | 28.9 | 42.6 | 45 | --- | --- | --- | --- | --- |
| HKSX10XC - 208 V | No Breaker | 34.7 | 49.8 | 50 | --- | --- | --- | --- | --- |
| HKSC05XC - 208 V | Breaker | 17.3 | 28.2 | 30 | --- | --- | --- | --- | --- |
| HKSC08XC - 208 V | Breaker | 28.9 | 42.6 | 45 | --- | --- | --- | --- | --- |
| HKSC10XC - 208 V | Breaker | 34.7 | 49.8 | 50 | --- | --- | --- | --- | --- |
| HKSC15XA - 208 V | Breaker | 34.7 | 49.8 | 50 | 17.3 | 21.7 | 25 | 71.5 | 80 |
| HKSC20DA - 208 V | Breaker | 34.7 | 49.8 | 50 | 34.7 | 43.3 | 45 | 93.2 | 100 |
| HKSC15XF - 208 V ^ | Breaker | 0 | 6.5 | 15 | 30 | 37.5 | 40 | --- | --- |
| HKSC20XF - 208 V ^ | Breaker | 0 | 6.5 | 15 | 37.5 | 47 | 50 | --- | --- |
| HKSX03XC - 240 V | No Breaker | --- | --- | --- | --- | --- | --- | --- | --- |
| HKSX05XC - 240 V | No Breaker | 20 | 32 | 35 | --- | --- | --- | --- | --- |
| HKSX06XC - 240 V | No Breaker | 25 | 38 | 40 | --- | --- | --- | --- | --- |
| HKSX08XC - 240 V | No Breaker | 33.3 | 48 | 50 | --- | --- | --- | --- | --- |
| HKSX10XC - 240 V | No Breaker | 40 | 57 | 60 | --- | --- | --- | --- | --- |
| HKSC05XC - 240 V | Breaker | 20 | 32 | 35 | --- | --- | --- | --- | --- |
| HKSC08XC - 240 V | Breaker | 33.3 | 48 | 50 | --- | --- | --- | --- | --- |
| HKSC10XC - 240 V | Breaker | 40 | 57 | 60 | --- | --- | --- | --- | --- |
| HKSC15XB - 240 V | Breaker | 40 | 57 | 60 | 20 | 25 | 25 | 81.5 | 90 |
| HKSC20DB - 240 V | Breaker | 40 | 57 | 60 | 40 | 50 | 50 | 106.5 | 110 |
| HKSC15XF - 240 V ^ | Breaker | 0 | 6.5 | 15 | 34.6 | 43 | 45 | --- | --- |
| HKSC20XF - 240 V ^ | Breaker | 0 | 6.5 | 15 | 43 | 54 | 60 | --- | --- |
| **AVPTC39C14AC** | | 0.0/0.0 | 6.5/6.5 | 15/15 | --- | --- | --- | --- | --- |
| HKSX03XC - 208 V | No Breaker | --- | --- | --- | --- | --- | --- | --- | --- |
| HKSX05XC - 208 V | No Breaker | 17.3 | 28.2 | 30 | --- | --- | --- | --- | --- |
| HKSX06XC - 208 V | No Breaker | 21.7 | 33.6 | 35 | --- | --- | --- | --- | --- |
| HKSX08XC - 208 V | No Breaker | 28.9 | 42.6 | 45 | --- | --- | --- | --- | --- |
| HKSX10XC - 208 V | No Breaker | 34.7 | 49.8 | 50 | --- | --- | --- | --- | --- |

See notes on page 19.

| Heater Kit Model | | Circuit 1 | | | Circuit 2 | | | Single-Point Kit | |
|---|---|---|---|---|---|---|---|---|---|
| | | Heater Amps | MCA[1] | MOP[2] | Heater Amps | MCA[1] | MOP[2] | MCA[1] | MOP[2] |
| HKSC05XC - 208 V | Breaker | 17.3 | 28.2 | 30 | --- | --- | --- | --- | --- |
| HKSC08XC - 208 V | | 28.9 | 42.6 | 45 | --- | --- | --- | --- | --- |
| HKSC10XC - 208 V | | 34.7 | 49.8 | 50 | --- | --- | --- | --- | --- |
| HKSC15XA - 208 V | | 34.7 | 49.8 | 50 | 17.3 | 21.7 | 25 | 71.5 | 80 |
| HKSC19CA - 208 V | | 34.7 | 49.8 | 50 | 34.7 | 43.3 | 45 | 93.2 | 100 |
| HKSC15XF - 208 V ^ | | 0 | 6.5 | 15 | 30 | 37.5 | 40 | --- | --- |
| HKSX03XC - 240 V | No Breaker | --- | --- | --- | --- | --- | --- | --- | --- |
| HKSX05XC - 240 V | | 20 | 32 | 35 | --- | --- | --- | --- | --- |
| HKSX06XC - 240 V | | 25 | 38 | 40 | --- | --- | --- | --- | --- |
| HKSX08XC - 240 V | | 33.3 | 48 | 50 | --- | --- | --- | --- | --- |
| HKSX10XC - 240 V | | 40 | 57 | 60 | --- | --- | --- | --- | --- |
| HKSC05XC - 240 V | Breaker | 20 | 32 | 35 | --- | --- | --- | --- | --- |
| HKSC08XC - 240 V | | 33.3 | 48 | 50 | --- | --- | --- | --- | --- |
| HKSC10XC - 240 V | | 40 | 57 | 60 | --- | --- | --- | --- | --- |
| HKSC15XB - 240 V | | 40 | 57 | 60 | 20 | 25 | 25 | 81.5 | 90 |
| HKSC19CB - 240 V | | 40 | 57 | 60 | 40 | 50 | 50 | 106.5 | 110 |
| HKSC15XF - 240 V ^ | | 0 | 6.5 | 15 | 34.6 | 43 | 45 | --- | --- |
| **AVPTC48C14AB** | | 0.0/0.0 | 6.5/6.5 | 15/15 | --- | --- | --- | --- | --- |
| HKSX03XC - 208 V | No Breaker | 10.8 | 20 | 20 | --- | --- | --- | --- | --- |
| HKSX05XC - 208 V | | 17.3 | 28 | 30 | --- | --- | --- | --- | --- |
| HKSX06XC - 208 V | | 21.7 | 34 | 35 | --- | --- | --- | --- | --- |
| HKSX08XC - 208 V | | 28.9 | 43 | 45 | --- | --- | --- | --- | --- |
| HKSX10XC - 208 V | | 34.7 | 50 | 50 | --- | --- | --- | --- | --- |
| HKSC05XC - 208 V | Breaker | 17.3 | 28 | 30 | --- | --- | --- | --- | --- |
| HKSC08XC - 208 V | | 28.9 | 43 | 45 | --- | --- | --- | --- | --- |
| HKSC10XC - 208 V | | 34.7 | 50 | 50 | --- | --- | --- | --- | --- |
| HKSC15XA - 208 V | | 34.7 | 50 | 50 | 17.3 | 22 | 25 | 72 | 80 |
| HKSC19CA - 208 V | | 34.7 | 50 | 50 | 34.7 | 43 | 45 | 93 | 100 |
| HKSC15XF - 208 V ^ | | 0 | 6.5 | 15 | 30 | 38 | 40 | --- | --- |
| HKSC20XF - 208 V ^ | | 0 | 6.5 | 15 | 37.5 | 47 | 50 | --- | --- |
| HKSX03XC - 240 V | No Breaker | 12.5 | 22 | 25 | --- | --- | --- | --- | --- |
| HKSX05XC - 240 V | | 20 | 32 | 35 | --- | --- | --- | --- | --- |
| HKSX06XC - 240 V | | 25 | 38 | 40 | --- | --- | --- | --- | --- |
| HKSX08XC - 240 V | | 33.3 | 48 | 50 | --- | --- | --- | --- | --- |
| HKSX10XC - 240 V | | 40 | 57 | 60 | --- | --- | --- | --- | --- |
| HKSC05XC - 240 V | Breaker | 20 | 32 | 35 | --- | --- | --- | --- | --- |
| HKSC08XC - 240 V | | 33.3 | 48 | 50 | --- | --- | --- | --- | --- |
| HKSC10XC - 240 V | | 40 | 57 | 60 | --- | --- | --- | --- | --- |
| HKSC15XB - 240 V | | 40 | 57 | 60 | 20 | 25 | 25 | 82 | 90 |
| HKSC19CB - 240 V | | 40 | 57 | 60 | 40 | 50 | 50 | 107 | 110 |
| HKSC15XF - 240 V ^ | | 0 | 6.5 | 15 | 34.6 | 43 | 45 | --- | --- |
| HKSC20XF - 240 V ^ | | 0 | 6.5 | 15 | 43.3 | 54 | 60 | --- | --- |

See notes on page 19.

| Heater Kit Model | | Circuit 1 | | | Circuit 2 | | | Single-Point Kit | |
|---|---|---|---|---|---|---|---|---|---|
| | | Heater Amps | MCA[1] | MOP[2] | Heater Amps | MCA[1] | MOP[2] | MCA[1] | MOP[2] |
| **AVPTC49C14AC** | | 0.0/0.0 | 6.5/6.5 | 15/15 | --- | --- | --- | --- | --- |
| HKSX03XC - 208 V | No Breaker | --- | --- | --- | --- | --- | --- | --- | --- |
| HKSX05XC - 208 V | | 17.3 | 28.2 | 30 | --- | --- | --- | --- | --- |
| HKSX06XC - 208 V | | 21.7 | 33.6 | 35 | --- | --- | --- | --- | --- |
| HKSX08XC - 208 V | | 28.9 | 42.6 | 45 | --- | --- | --- | --- | --- |
| HKSX10XC - 208 V | | 34.7 | 49.8 | 50 | --- | --- | --- | --- | --- |
| HKSC05XC - 208 V | Breaker | 17.3 | 28.2 | 30 | --- | --- | --- | --- | --- |
| HKSC08XC - 208 V | | 28.9 | 42.6 | 45 | --- | --- | --- | --- | --- |
| HKSC10XC - 208 V | | 34.7 | 49.8 | 50 | --- | --- | --- | --- | --- |
| HKSC15XA - 208 V | | 34.7 | 49.8 | 50 | 17.3 | 21.7 | 25 | 71.5 | 80 |
| HKSC19CA - 208 V | | 34.7 | 49.8 | 50 | 34.7 | 43.3 | 45 | 93.2 | 100 |
| HKSC15XF - 208 V ^ | | 0 | 6.5 | 15 | 30 | 37.5 | 40 | --- | --- |
| HKSX03XC - 240 V | No Breaker | --- | --- | --- | --- | --- | --- | --- | --- |
| HKSX05XC - 240 V | | 20 | 32 | 35 | --- | --- | --- | --- | --- |
| HKSX06XC - 240 V | | 25 | 38 | 40 | --- | --- | --- | --- | --- |
| HKSX08XC - 240 V | | 33.3 | 48 | 50 | --- | --- | --- | --- | --- |
| HKSX10XC - 240 V | | 40 | 57 | 60 | --- | --- | --- | --- | --- |
| HKSC05XC - 240 V | Breaker | 20 | 32 | 35 | --- | --- | --- | --- | --- |
| HKSC08XC - 240 V | | 33.3 | 48 | 50 | --- | --- | --- | --- | --- |
| HKSC10XC - 240 V | | 40 | 57 | 60 | --- | --- | --- | --- | --- |
| HKSC15XB - 240 V | | 40 | 57 | 60 | 20 | 25 | 25 | 81.5 | 90 |
| HKSC19CB - 240 V | | 40 | 57 | 60 | 40 | 50 | 50 | 106.5 | 110 |
| HKSC15XF - 240 V ^ | | 0 | 6.5 | 15 | 34.6 | 43 | 45 | --- | --- |
| **AVPTC49D14AB** | | 0/0 | 6.5/6.5 | 15/15 | --- | --- | --- | --- | --- |
| HKSX03XC - 208 V | No Breaker | --- | --- | --- | --- | --- | --- | --- | --- |
| HKSX05XC - 208 V | | 17.3 | 28.2 | 30 | --- | --- | --- | --- | --- |
| HKSX06XC - 208 V | | 21.7 | 33.6 | 35 | --- | --- | --- | --- | --- |
| HKSX08XC - 208 V | | 28.9 | 42.6 | 45 | --- | --- | --- | --- | --- |
| HKSX10XC - 208 V | | 34.7 | 49.8 | 50 | --- | --- | --- | --- | --- |
| HKSC05XC - 208 V | Breaker | 17.3 | 28.2 | 30 | --- | --- | --- | --- | --- |
| HKSC08XC - 208 V | | 28.9 | 42.6 | 45 | --- | --- | --- | --- | --- |
| HKSC10XC - 208 V | | 34.7 | 49.8 | 50 | --- | --- | --- | --- | --- |
| HKSC15XA - 208 V | | 34.7 | 49.8 | 50 | 17.3 | 21.7 | 25 | 71.5 | 80 |
| HKSC20DA - 208 V | | --- | --- | --- | --- | --- | --- | --- | --- |
| HKSC15XF - 208 V ^ | | --- | --- | --- | --- | --- | --- | --- | --- |
| HKSC20XF - 208 V ^ | | --- | --- | --- | --- | --- | --- | --- | --- |
| HKSC25DA - 208 V | | --- | --- | --- | --- | --- | --- | --- | --- |
| HKSX03XC - 240 V | No Breaker | --- | --- | --- | --- | --- | --- | --- | --- |
| HKSX05XC - 240 V | | 20 | 32 | 35 | --- | --- | --- | --- | --- |
| HKSX06XC - 240 V | | 25 | 38 | 40 | --- | --- | --- | --- | --- |
| HKSX08XC - 240 V | | 33.3 | 48 | 50 | --- | --- | --- | --- | --- |
| HKSX10XC - 240 V | | 40 | 57 | 60 | --- | --- | --- | --- | --- |

See notes on page 19.

| Heater Kit Model | | Circuit 1 | | | Circuit 2 | | | Single-Point Kit | |
|---|---|---|---|---|---|---|---|---|---|
| | | Heater Amps | MCA[1] | MOP[2] | Heater Amps | MCA[1] | MOP[2] | MCA[1] | MOP[2] |
| HKSC05XC - 240 V | Breaker | 20 | 32 | 35 | --- | --- | --- | --- | --- |
| HKSC08XC - 240 V | | 33.3 | 48 | 50 | --- | --- | --- | --- | --- |
| HKSC10XC - 240 V | | 40 | 57 | 60 | --- | --- | --- | --- | --- |
| HKSC15XB - 240 V | | 40 | 57 | 60 | 20 | 25 | 25 | 81.5 | 90 |
| HKSC20DB - 240 V | | --- | --- | --- | --- | --- | --- | --- | --- |
| HKSC15XF - 240 V ^ | | --- | --- | --- | --- | --- | --- | --- | --- |
| HKSC20XF - 240 V ^ | | --- | --- | --- | --- | --- | --- | --- | --- |
| HKSC25DB - 240 V | | --- | --- | --- | --- | --- | --- | --- | --- |
| **AVPTC59C14AC** | | 0/0 | 8.6/8.6 | 15/15 | --- | --- | --- | --- | --- |
| HKSX03XC - 208 V | No Breaker | --- | --- | --- | --- | --- | --- | --- | --- |
| HKSX05XC - 208 V | | 17.3 | 30.3 | 35 | --- | --- | --- | --- | --- |
| HKSX06XC - 208 V | | 21.7 | 36 | 40 | --- | --- | --- | --- | --- |
| HKSX08XC - 208 V | | 28.9 | 45 | 45 | --- | --- | --- | --- | --- |
| HKSX10XC - 208 V | | 34.7 | 52 | 60 | --- | --- | --- | --- | --- |
| HKSC05XC - 208 V | Breaker | 17.3 | 30.3 | 35 | --- | --- | --- | --- | --- |
| HKSC08XC - 208 V | | 28.9 | 45 | 45 | --- | --- | --- | --- | --- |
| HKSC10XC - 208 V | | 34.7 | 52 | 60 | --- | --- | --- | --- | --- |
| HKSC15XB [3] - 208 V | | 34.7 | 52 | 60 | 17.3 | 21.7 | 25 | 73.6 | 80 |
| HKSC19CH - 208 V | | 34.7 | 52 | 60 | 34.7 | 43.3 | 45 | 95.3 | 100 |
| HKSC15XF - 208 V ^ | | 0 | 8.6 | 15 | 30 | 37.5 | 40 | --- | --- |
| HKSC20XF - 208 V ^ | | --- | --- | --- | --- | --- | --- | --- | --- |
| HKSX03XC - 240 V | No Breaker | --- | --- | --- | --- | --- | --- | --- | --- |
| HKSX05XC - 240 V | | 20 | 34 | 35 | --- | --- | --- | --- | --- |
| HKSX06XC - 240 V | | 25 | 39.9 | 40 | --- | --- | --- | --- | --- |
| HKSX08XC - 240 V | | 33.3 | 50.3 | 60 | --- | --- | --- | --- | --- |
| HKSX10XC - 240 V | | 40 | 58.6 | 60 | --- | --- | --- | --- | --- |
| HKSC05XC - 240 V | Breaker | 20 | 34 | 35 | --- | --- | --- | --- | --- |
| HKSC08XC - 240 V | | 33.3 | 50.3 | 60 | --- | --- | --- | --- | --- |
| HKSC10XC - 240 V | | 40 | 58.6 | 60 | --- | --- | --- | --- | --- |
| HKSC15XB - 240 V | | 40 | 58.6 | 60 | 20 | 25 | 25 | 83.6 | 90 |
| HKSC19CB - 240 V | | 40 | 58.6 | 60 | 40 | 50 | 50 | 108.6 | 110 |
| HKSC15XF - 240 V ^ | | 0 | 8.6 | 15 | 34.6 | 43 | 45 | --- | --- |
| HKSC20XF - 240 V ^ | | --- | --- | --- | --- | --- | --- | --- | --- |
| **AVPTC59D14AC** | | 0/0 | 8.6/8.6 | 15/15 | --- | --- | --- | --- | --- |
| HKSX03XC - 208 V | No Breaker | --- | --- | --- | --- | --- | --- | --- | --- |
| HKSX06XC - 208 V | | 21.7 | 36 | 40 | --- | --- | --- | --- | --- |
| HKSX08XC - 208 V | | 28.9 | 45 | 45 | --- | --- | --- | --- | --- |
| HKSX10XC - 208 V | | 34.7 | 52 | 60 | --- | --- | --- | --- | --- |
| HKSC05XC - 208 V | Breaker | 17.3 | 30.3 | 35 | --- | --- | --- | --- | --- |
| HKSC08XC - 208 V | | 28.9 | 45 | 45 | --- | --- | --- | --- | --- |
| HKSC10XC - 208 V | | 34.7 | 52 | 60 | --- | --- | --- | --- | --- |
| HKSC15XB [3] - 208 V | | 34.7 | 52 | 60 | 17.3 | 21.7 | 25 | 73.6 | 80 |
| HKSC20DH - 208 V | | 34.7 | 52 | 60 | 34.7 | 43.3 | 45 | 95.3 | 100 |
| HKSC15XF - 208 V ^ | | 0 | 8.6 | 15 | 30 | 37.5 | 40 | --- | --- |
| HKSC20XF - 208 V ^ | | 0 | 8.6 | 15 | 37.5 | 47 | 50 | --- | --- |

See notes on page 19.

| Heater Kit Model | | Circuit 1 | | | Circuit 2 | | | Single-Point Kit | |
|---|---|---|---|---|---|---|---|---|---|
| | | Heater Amps | MCA[1] | MOP[2] | Heater Amps | MCA[1] | MOP[2] | MCA[1] | MOP[2] |
| HKSX03XC - 240 V | | --- | --- | --- | --- | --- | --- | --- | --- |
| HKSX05XC - 240 V | | 20 | 34 | 35 | --- | --- | --- | --- | --- |
| HKSX06XC - 240 V | No Breaker | 25 | 39.9 | 40 | --- | --- | --- | --- | --- |
| HKSX08XC - 240 V | | 33.3 | 50.3 | 60 | --- | --- | --- | --- | --- |
| HKSX10XC - 240 V | | 40 | 58.6 | 60 | --- | --- | --- | --- | --- |
| HKSC05XC - 240 V | | 20 | 34 | 35 | --- | --- | --- | --- | --- |
| HKSC08XC - 240 V | | 33.3 | 50.3 | 60 | --- | --- | --- | --- | --- |
| HKSC10XC - 240 V | | 40 | 58.6 | 60 | --- | --- | --- | --- | --- |
| HKSC15XB - 240 V | Breaker | 40 | 58.6 | 60 | 20 | 25 | 25 | 83.6 | 90 |
| HKSC20DB - 240 V | | 40 | 58.6 | 60 | 40 | 50 | 50 | 108.6 | 110 |
| HKSC15XF - 240 V ^ | | 0 | 8.6 | 15 | 34.6 | 43 | 45 | --- | --- |
| HKSC20XF - 240 V ^ | | 0 | 8.6 | 15 | 43 | 54 | 60 | --- | --- |
| **AVPTC60D14AA** | | 0.0/0.0 | 8.6/8.6 | 15/15 | --- | --- | --- | --- | --- |
| HKS*03XC* | | 10.8/12.5 | 22/24 | 25/25 | --- | --- | --- | --- | --- |
| HKS*05XC* | | 17.3/20.0 | 30/34 | 35/35 | --- | --- | --- | --- | --- |
| HKS*06XC* | | 21.7/25.0 | 36/40 | 40/40 | --- | --- | --- | --- | --- |
| HKS*08XC* | | 28.9/33.3 | 45/50 | 45/60 | --- | --- | --- | --- | --- |
| HKS*10XC* | | 34.7/40.0 | 52/59 | 60/60 | --- | --- | --- | --- | --- |
| HKSC15*#* | | 34.7/40.0 | 52/59 | 60/60 | 17.3/20 | 22/25 | 25/25 | 74/84 | 80/90 |
| HKSC20D#* | | 34.7/40.0 | 52/59 | 60/60 | 34.7/40.0 | 43/50 | 45/50 | 95/109 | 100/110 |
| HKSC15XF* | | 0.0/0.0 | 8.6/8.6 | 15/15 | 30.0/34.6 | 38/43 | 40/45 | --- | --- |
| HKSC20XF* | | 0.0/0.0 | 8.6/8.6 | 15/15 | 37.5/43.3 | 47/54 | 50/60 | --- | --- |
| HKSC25DC* | | 52.0/60.0 | 74/84 | 80/90 | 35/40 | 43/50 | 45/50 | 117/134 | 125/150 |
| **AVPTC61D14AC** | | 0/0 | 8.6/8.6 | 15/15 | --- | --- | --- | --- | --- |
| HKSX03XC - 208 V | | --- | --- | --- | --- | --- | --- | --- | --- |
| HKSX05XC - 208 V | | 17.3 | 30.3 | 35 | --- | --- | --- | --- | --- |
| HKSX06XC - 208 V | No Breaker | 21.7 | 36 | 40 | --- | --- | --- | --- | --- |
| HKSX08XC - 208 V | | 28.9 | 45 | 45 | --- | --- | --- | --- | --- |
| HKSX10XC - 208 V | | 34.7 | 52 | 60 | --- | --- | --- | --- | --- |
| HKSC05XC - 208 V | | 17.3 | 30.3 | 35 | --- | --- | --- | --- | --- |
| HKSC08XC - 208 V | | 28.9 | 45 | 45 | --- | --- | --- | --- | --- |
| HKSC10XC - 208 V | | 34.7 | 52 | 60 | --- | --- | --- | --- | --- |
| HKSC15XB[3] - 208 V | Breaker | 34.7 | 52 | 60 | 17.3 | 21.7 | 25 | 73.6 | 80 |
| HKSC20DH - 208 V | | 34.7 | 52 | 60 | 34.7 | 43.3 | 45 | 95.3 | 100 |
| HKSC15XF - 208 V ^ | | 0 | 8.6 | 15 | 30 | 37.5 | 40 | --- | --- |
| HKSC20XF - 208 V ^ | | 0 | 8.6 | 15 | 37.5 | 47 | 50 | --- | --- |
| HKSC25DA - 208 V | | 52 | 73.6 | 80 | 34.7 | 43.3 | 45 | 117 | 125 |
| HKSX03XC - 240 V | | --- | --- | --- | --- | --- | --- | --- | --- |
| HKSX05XC - 240 V | | 20 | 34 | 35 | --- | --- | --- | --- | --- |
| HKSX06XC - 240 V | No Breaker | 25 | 39.9 | 40 | --- | --- | --- | --- | --- |
| HKSX08XC - 240 V | | 33.3 | 50.3 | 60 | --- | --- | --- | --- | --- |
| HKSX10XC - 240 V | | 40 | 58.6 | 60 | --- | --- | --- | --- | --- |

See notes on page 19.

| Heater Kit Model | | Circuit 1 | | | Circuit 2 | | | Single-Point Kit | |
|---|---|---|---|---|---|---|---|---|---|
| | | Heater Amps | MCA[1] | MOP[2] | Heater Amps | MCA[1] | MOP[2] | MCA[1] | MOP[2] |
| HKSC05XC - 240 V | Breaker | 20 | 34 | 35 | --- | --- | --- | --- | --- |
| HKSC08XC - 240 V | | 33.3 | 50.3 | 60 | --- | --- | --- | --- | --- |
| HKSC10XC - 240 V | | 40 | 58.6 | 60 | --- | --- | --- | --- | --- |
| HKSC15XB - 240 V | | 40 | 58.6 | 60 | 20 | 25 | 25 | 83.6 | 90 |
| HKSC20DB - 240 V | | 40 | 58.6 | 60 | 40 | 50 | 50 | 108.6 | 110 |
| HKSC15XF - 240 V ^ | | 0 | 8.6 | 15 | 34.6 | 43 | 45 | --- | --- |
| HKSC20XF - 240 V ^ | | 0 | 8.6 | 15 | 43 | 54 | 60 | --- | --- |
| HKSC25DB - 240 V | | 60 | 84 | 90 | 40 | 50 | 50 | 133.6 | 150 |

[1] Minimum Circuit Ampacity (Heater Amps + Motor Amps) X 1.25
[2] Maximum Overcurrent Protection = 2.25 X Motor Amps + Heater Amps
^ Circuit 1: Single-phase for Air Handlers Circuit 2: Three-phase for HKR3 Heater Kits
Note: The 208 or 240 in the heat kit part number field is for clarification of the nominal voltage for this model.
[3]Notation is correct as XB because technically the 240V heater kit application can be used here without any issues.

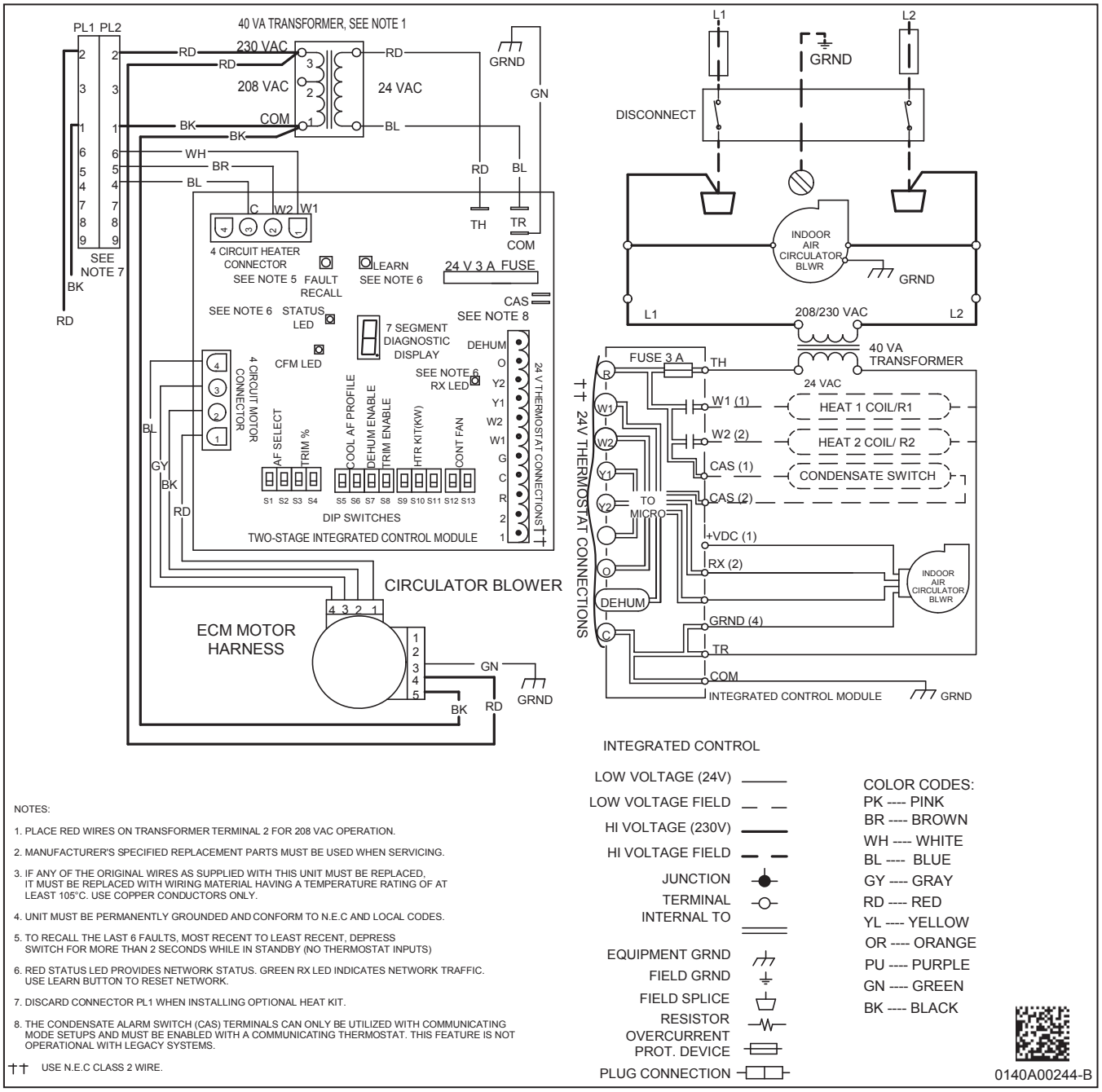


NOTES:

1. PLACE RED WIRES ON TRANSFORMER TERMINAL 2 FOR 208 VAC OPERATION.
2. MANUFACTURER'S SPECIFIED REPLACEMENT PARTS MUST BE USED WHEN SERVICING.
3. IF ANY OF THE ORIGINAL WIRES AS SUPPLIED WITH THIS UNIT MUST BE REPLACED, IT MUST BE REPLACED WITH WIRING MATERIAL HAVING A TEMPERATURE RATING OF AT LEAST 105°C. USE COPPER CONDUCTORS ONLY.
4. UNIT MUST BE PERMANENTLY GROUNDED AND CONFORM TO N.E.C AND LOCAL CODES.
5. TO RECALL THE LAST 6 FAULTS, MOST RECENT TO LEAST RECENT, DEPRESS SWITCH FOR MORE THAN 2 SECONDS WHILE IN STANDBY (NO THERMOSTAT INPUTS)
6. RED STATUS LED PROVIDES NETWORK STATUS. GREEN RX LED INDICATES NETWORK TRAFFIC. USE LEARN BUTTON TO RESET NETWORK.
7. DISCARD CONNECTOR PL1 WHEN INSTALLING OPTIONAL HEAT KIT.
8. THE CONDENSATE ALARM SWITCH (CAS) TERMINALS CAN ONLY BE UTILIZED WITH COMMUNICATING MODE SETUPS AND MUST BE ENABLED WITH A COMMUNICATING THERMOSTAT. THIS FEATURE IS NOT OPERATIONAL WITH LEGACY SYSTEMS.

†† USE N.E.C CLASS 2 WIRE.

Wiring is subject to change. Always refer to the wiring diagram on the unit for the most up-to-date wiring.

**WARNING** — ***High Voltage:*** Disconnect all power before servicing or installing this unit. Multiple power sources may be present. Failure to do so may cause property damage, personal injury, or death.

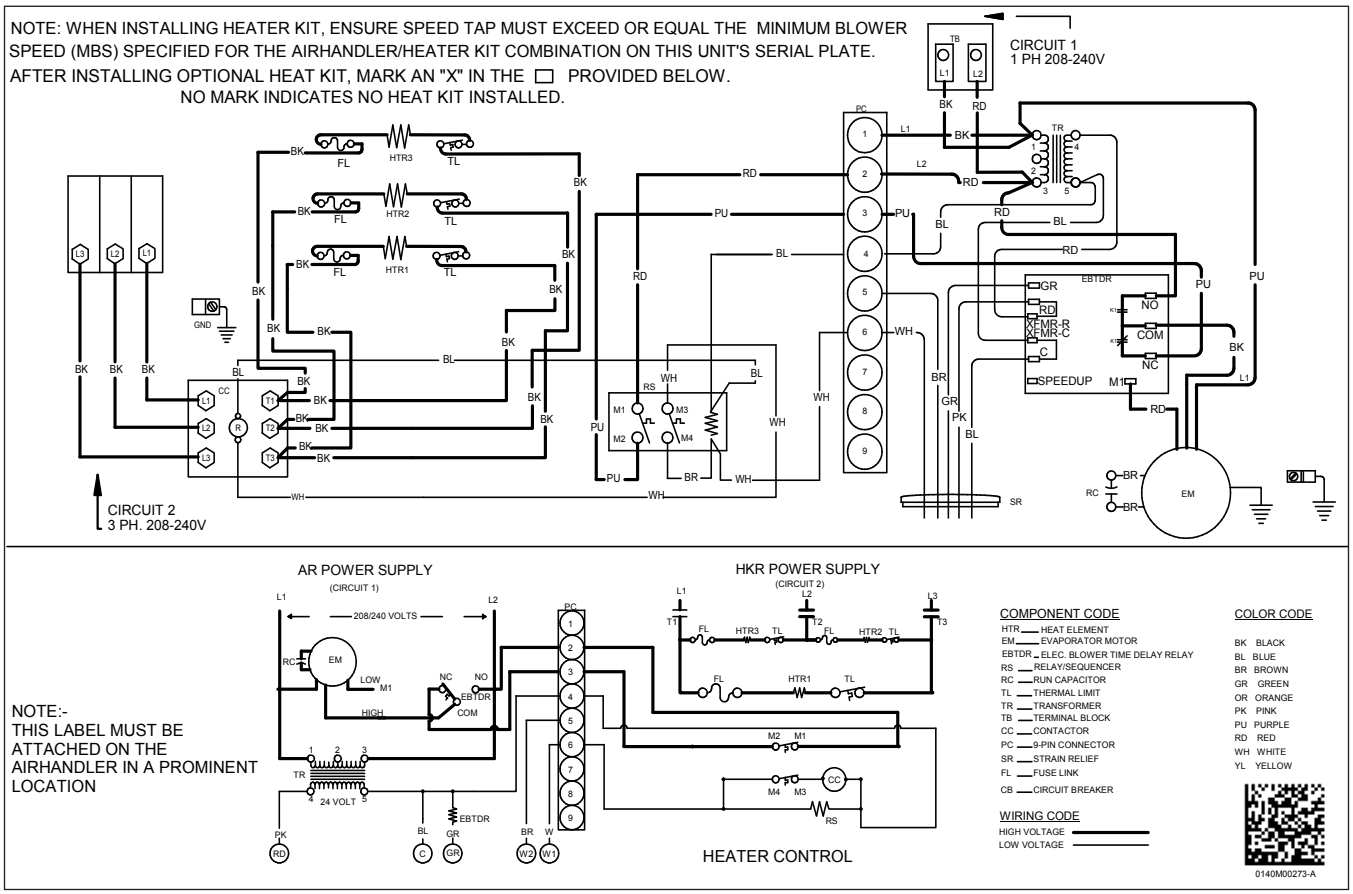


Wiring is subject to change. Always refer to the wiring diagram on the unit for the most up-to-date wiring.

| ⚠ **Warning** | ***High Voltage:*** Disconnect all power before servicing or installing this unit. Multiple power sources may be present. Failure to do so may cause property damage, personal injury, or death. ⚡ |
|---|---|

## Downflow Kits

| DFK-B | DFK-C | DFK-D |
|---|---|---|
| AVPTC24B14** | AVPTC48C14** | AVPTC42D14** |
| AVPTC25B14** | AVPTC31C14** | AVPTC48D14** |
| AVPTC29B14** | AVPTC33C14** | AVPTC60D14** |
| AVPTC35B14** | AVPTC37C14** | AVPTC37D14** |
| AVPTC37B14** | AVPTC39C14** | AVPTC59D14** |
| | AVPTC49C14** | AVPTC49D14** |
| | AVPTC59C14** | AVPTC61D14** |

## Filters

| Chassis | Part # | Size |
|---|---|---|
| B | ALFH16201E | 16.0" x 20.0" |
| C | ALFH1912201E | 19.5” x 20.0” |
| D | ALFH20231E | 23.0” x 20.0” |

## Single Point Kit **

| Model | HKR-15C | HKR-20C | HKR-21C |
|---|---|---|---|
| SPW-01 | X | X | X |

** Must be installed along with any of the above compatible heat kits. This kit will fit any AVPTC air handler as long as a compatible heat kit is installed in the unit.