ARUF Series

Multi-Position, Multi-speed Air Handler with PSC Motor 1½ to 5 Tons

Contents

Nomenclature 2
Product Specifications 3
Heater Kit Nomenclature 3
Dimensions 4
Airflow Data 5
Heat Kit Data 6
Wiring Diagrams 13
Accessories 15

Product Features

- Check flowrator for cooling and heat pump applications
- Direct drive, multi-speed PSC blower motor
- All-aluminum evaporator coil
- Coil mounting track for quick repositioning
- Cabinet air leakage less than 2.0% at 1.0 inch H_2O when tested in accordance with ASHRAE standard 193
- Cabinet air leakage less than 1.4% at 0.5 inch H_2O when tested in accordance with ASHRAE standard 193
- AHRI certified; ETL listed
- Rigid SmartFrame™ cabinet
- Horizontal or vertical configuration capabilities
- 21" depth for easier attic access
- DecaBDE-free thermoplastic drain pan with secondary drain connections
- Screw-less sides and back helps to reduce condensation when installed n humid locations
- Foil-faced insulation covers the internal casing to reduce cabinet condensation
- Galvanized, leather grain-embossed finish
- Glue-less cabinet insulation retention
- Tool-less filter access
- Field Installed 3 kW – 25 kW electric heater kits available

10 YEAR UNIT REPLACEMENT HEAT EXCHANGER LIMITED WARRANTY*

ALL ALUMINUM COIL

AHRI CERTIFIED® www.ahricertified.org

C ETL LISTED US Intertek

COMPANY WITH QUALITY SYSTEM CERTIFIED BY DNV GL ▪ ISO 9001 ▪

COMPANY WITH ENVIRONMENTAL SYSTEM CERTIFIED BY DNV GL ▪ ISO 14001 ▪

* Complete warranty details available from your local dealer or at www.franklinhvacsystems.com. To receive the 10-Year Parts Limited Warranty, online registration must be completed within 60 days of installation. Online registration is not required in California or Quebec.

A	R	U	F	18	B	1	4	AA
1	2	3	4	5,6	7	8	10	11,12

Brand
- A Single-piece Air Handler

Unit Application
- C Ceiling Mount PSC Motor
- D Downflow PSC Motor
- E Multi-Position Variable-Speed Motor
- R Multi-Position PSC Motor
- S Multi-Position EEM Motor
- W Wall Mount PSC Motor

Cabinet Finish
- U Unpainted
- P Painted
- N Uncased

Expansion Device
- F Flowrator
- T Expansion Valve

Nominal Capacity Range @ 13 SEER

25, 29 – 2 Tons	43, 47 – 3½ Tons
31 – 2½ Tons	49 – 4 Tons
37 – 3 Tons	61 – 5 Tons

Cabinet Width
- B 17½"
- C 21"
- D 24½"

Electrical
- 1 208/240 V, 1 Phase, 60 Hz

Refrigerant Charge
- 4 = R-410A

Engineering *
- Major/ Minor Revisions
- * Not used for inventory management

HKS	X	03	X	A	AA
1	2	3	4	5	6,7

Unit Type
- HKS Heat Kit for Air Handlers

Circuit Breaker
- X No circuit breaker
- C Circuit Breaker

Heating Capacity @ 240 Volts

03	3.0 kW	15	14.4 kW
05	4.5 kW	19	19.2 kW wth 150F limit
06	6.0 kW	20	19.2 kW with 170F limit
08	8.0 kW	25	25.0 kW
10	9.6 kW		

Phase

A Single Phase 208 V	E Three Phase 240 V
B Single Phase 240 V	F Three Phase 208/240 V
C Single Phase 208/240 V	G Three Phase 460 V
D Three Phase 208 V	
H Special case 208 V *	

Cabinet Size (MAX)
- C C Cabinet
- D D Cabinet
- X All Cabinet Sizes

Revisions
- Engineering Revisions

	ARUF 25B14*	ARUF 29B14*	ARUF 31B14*	ARUF 37C14*	ARUF 37D14*	ARUF 43C14*	ARUF 43D14*	ARUF 47D14*	ARUF 49C14*	ARUF 49D14*	ARUF 61D14*
Nominal Ratings											
Cooling (Btu/h)	24,000	25,000	30,000	36,000	36,000	42,000	42,000	43,000	48,000	48,000	60,000
Piston Size	0.051	0.057	0.065	0.072	0.072	0.076	0.076	0.076	0.080	0.080	0.080
Blower											
Diameter	9½"	9½"	9½"	10⅝"	10⅝"	10⅝"	10⅝"	10⅝"	10⅝"	10⅝"	11 15/16"
Width	6"	6"	6"	8"	10⅝"	8"	10⅝"	10⅝"	10⅝"	10⅝"	10⅝"
Coil Connections											
Liquid	⅜"	⅜"	⅜"	⅜"	⅜"	⅜"	⅜"	⅜"	⅜"	⅜"	⅜"
Suction	¾"	¾"	⅞"	⅞"	⅞"	⅞"	⅞"	⅞"	⅞"	⅞"	⅞"
Coil Drain Connect (FPT)	¾"	¾"	¾"	¾"	¾"	¾"	¾"	¾"	¾"	¾"	¾"
Electrical Data											
Voltage	208/230	208/230	208/230	208/230	208/230	208/230	208/230	208/230	208/230	208/230	208/230
Min Circuit Ampacity	2.2/2.2	2.2/2.2	2.2/2.2	3.6/3.6	3.6/3.6	3.6/3.6	4/4	4/4	4/4	4/4	6/6
Max. Overcurrent Device (Amps)	15/15	15/15	15/15	15/15	15/15	15/15	15/15	15/15	15/15	15/15	15/15
Minimum VAC	197	197	197	197	197	197	197	197	197	197	197
Maximum VAC	253	253	253	253	253	253	253	253	253	253	253
Blower Motor											
Full Load Amps (FLA)	1.75	1.75	1.75	2.85	2.85	2.85	3.5	3.5	3.1	3.5	4.6
Horsepower (HP)	⅓	⅓	⅓	⅓	⅓	½	⅓	½	½	½	¾
Ship Weight (Lbs.)	100	100	110	130	140	130	145	150	135	145	155

Note: For a properly matched system and piston sizing information, refer to Amana piston kit chart of the corresponding Amana® outdoor unit.
Minimum Circuit Ampacity (MCA) and Maximum Overcurrent Protection (MOP) for blower without supplemental heat installed.
Refer to unit nameplate and/or Heat Kit Data for specification with approved accessory heaters installed.

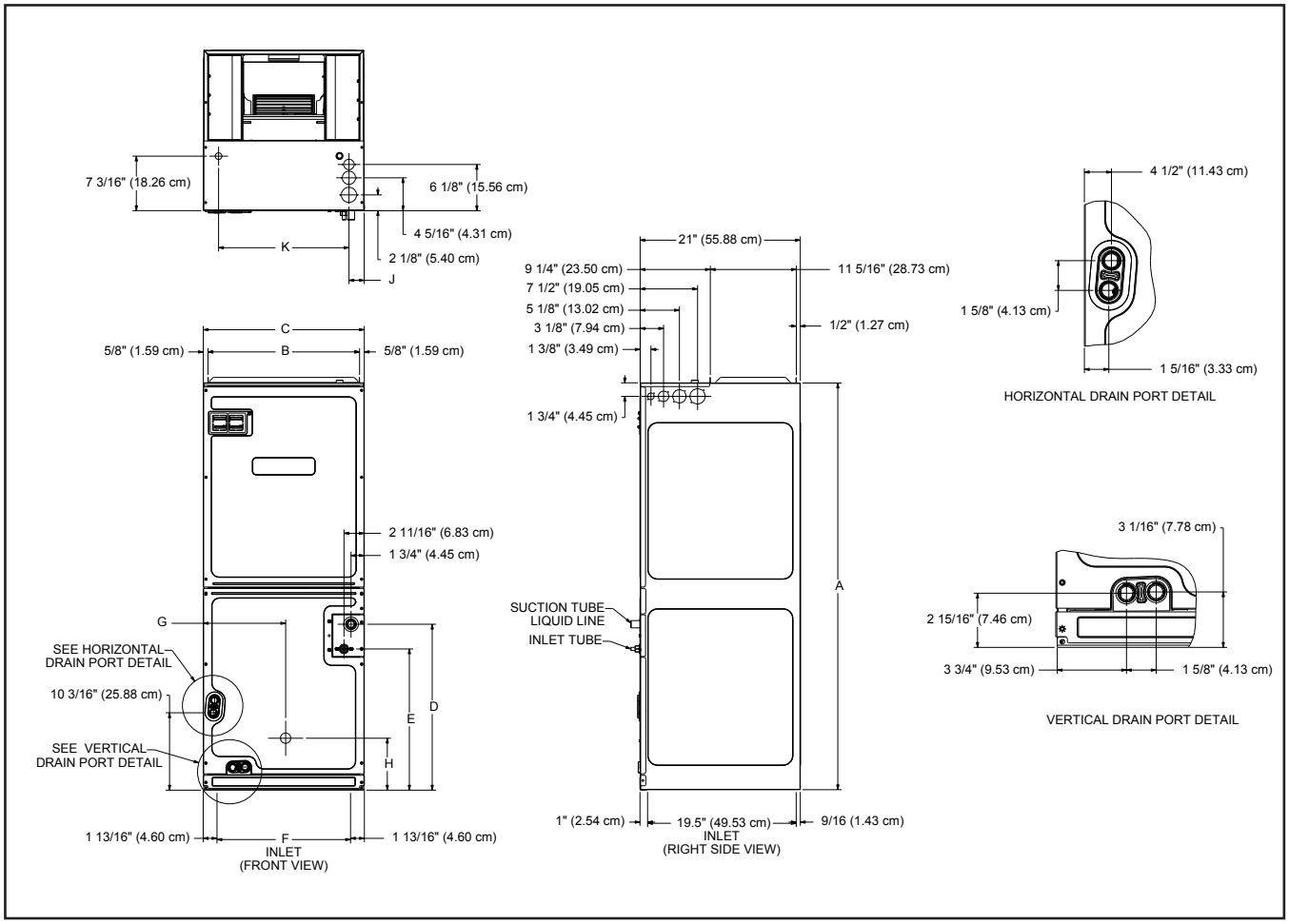

Model	A"	B"	C"	D"	E"	F"	G"	H"
ARUF25B14*	45	16⅜	17½	15¼	12	14⅛	9⅛	11⅞
ARUF29B14*	45	16⅜	17½	15¼	12	14⅛	9⅛	12¾
ARUF31B14*	53 7/16	16⅜	17½	23 11/16	20½	14⅛	9⅛	7⅝
ARUF37C14*	53 7/16	19⅞	21	21 13/16	18⅝	17 11/16	10 13/16	6 13/16
ARUF43C14*	53 7/16	19⅞	21	21 13/16	18⅝	17 11/16	10 13/16	6 13/16
ARUF49C14*	53 7/16	19⅞	21	21 13/16	18⅝	17 11/16	10 13/16	6 13/16
ARUF37D14*	53 7/16	23 5/16	24½	21½	18 5/16	21 3/16	12⅝	6⅞
ARUF43D14*	53 7/16	23 5/16	24½	21½	18 5/16	21 3/16	12⅝	6⅞
ARUF47D14*	58	23 5/16	24½	26⅛	22⅞	21 3/16	12⅝	25 2/16
ARUF49D14*	53 7/16	23 5/16	24½	21½	18 5/16	21 3/16	12⅝	6⅞
ARUF61D14*	58	23 5/16	24½	26⅛	22⅞	21 3/16	12⅝	25 2/16

Model	Motor Speed	Static Pressure (in w.c) Airflow (CFM)						
		0.1	0.2	0.3	0.4	0.5	0.6	0.7
ARUF25B14	Low	650	620	595	540	490	420	275
	Med	885	865	825	815	750	690	560
	High	1255	1225	1130	1090	965	925	800
ARUF29B14	Low	650	620	595	540	490	420	275
	Med	885	865	825	815	750	690	560
	High	1255	1225	1130	1090	965	925	800
ARUF31B14	Low	660	625	595	560	500	430	330
	Med	930	905	865	820	765	700	590
	High	1235	1185	1130	1060	990	910	825
ARUF37C14	Low	1120	1085	1040	1000	940	875	800
	Med	1425	1385	1345	1285	1220	1145	1060
	High	1625	1575	1520	1460	1375	1295	1200
ARUF43C14	Low	1120	1085	1040	1000	940	875	800
	Med	1425	1385	1345	1285	1220	1145	1060
	High	1625	1575	1520	1460	1375	1295	1200
ARUF49C14	Low	1295	1255	1225	1175	1120	1055	970
	Med	1535	1485	1420	1370	1295	1215	1130
	High	1755	1680	1590	1515	1425	1340	1250
ARUF37D14	Low	1155	1115	1070	1015	955	895	840
	Med	1505	1470	1430	1375	1300	1210	1105
	High	1785	1735	1680	1625	1555	1440	1330
ARUF43D14	Low	1410	1360	1290	1210	1120	1010	920
	Med	1610	1540	1470	1390	1300	1190	1060
	High	1900	1830	1740	1645	1540	1420	1280
ARUF47D14	Low	1420	1370	1310	1240	1125	1045	960
	Med	1625	1585	1515	1435	1350	1235	1095
	High	1930	1890	1820	1735	1635	1505	1355
ARUF49D14	Low	1410	1360	1290	1210	1120	1010	920
	Med	1610	1540	1470	1390	1300	1190	1060
	High	1900	1830	1740	1645	1540	1420	1280
ARUF61D14	Low	1530	1500	1460	1405	1350	1280	1155
	Med	1950	1885	1830	1785	1745	1670	1595
	High	2235	2170	2100	2030	1965	1915	1825

Notes

- Airflow data indicated is at 230V without air filter in place.
- The chart is for information only. For satisfactory operation, external static pressure must not exceed value shown on rating plate. The shaded area indicates ranges in excess of maximum design external static pressure.
- Use the CFM adjustment factors of 0.98 for horizontal left and 0.96 for horizontal right & downflow orientations

Heater Kit Model		Circuit 1			Circuit 2			Single-Point Kit	
		Amps	MCA[1]	MOP[2]	Amps	MCA[1]	MOP[2]	MCA[1]	MOP[2]
ARUF25B14AC		0/0	2.2/2.2	15/15	---	---	---	---	---
HKSX03XC- 208 V	No Breaker	10.8	16	20	---	---	---	---	---
HKSX05XC- 208 V		17.3	24	25	---	---	---	---	---
HKSX06XC- 208 V		21.7	29	30	---	---	---	---	---
HKSX08XC- 208 V		28.9	38	40	---	---	---	---	---
HKSX10XC- 208 V		34.7	46	50	---	---	---	---	---
HKSC05XC- 208 V	Breaker	17.3	24	25	---	---	---	---	---
HKSC08XC- 208 V		28.9	38	40	---	---	---	---	---
HKSC10XC- 208 V		34.7	46	50	---	---	---	---	---
HKSX03XC- 240 V	No Breaker	12.5	18	20	---	---	---	---	---
HKSX05XC- 240 V		20	27	30	---	---	---	---	---
HKSX06XC- 240 V		25	33	35	---	---	---	---	---
HKSX08XC- 240 V		33.3	44	45	---	---	---	---	---
HKSX10XC- 240 V		40.0	52	60	---	---	---	---	---
HKSC05XC- 240 V	Breaker	20	27	30	---	---	---	---	---
HKSC08XC- 240 V		33.3	44	45	---	---	---	---	---
HKSC10XC- 240 V		40.0	52	60	---	---	---	---	---
ARUF29B14AC		0/0	2.2/2.2	15/15	---	---	---	---	---
HKSX03XC- 208 V	No Breaker	10.8	16	20	---	---	---	---	---
HKSX05XC- 208 V		17.3	24	25	---	---	---	---	---
HKSX06XC- 208 V		21.7	29	30	---	---	---	---	---
HKSX08XC- 208 V		28.9	38	40	---	---	---	---	---
HKSX10XC- 208 V		34.7	46	50	---	---	---	---	---
HKSC05XC- 208 V	Breaker	17.3	24	25	---	---	---	---	---
HKSC08XC- 208 V		28.9	38	40	---	---	---	---	---
HKSC10XC- 208 V		34.7	46	50	---	---	---	---	---
HKSX03XC- 240 V	No Breaker	12.5	18	20	---	---	---	---	---
HKSX05XC- 240 V		20	27	30	---	---	---	---	---
HKSX06XC- 240 V		25	33	35	---	---	---	---	---
HKSX08XC- 240 V		33.3	44	45	---	---	---	---	---
HKSX10XC- 240 V		40.0	52	60	---	---	---	---	---
HKSC05XC- 240 V	Breaker	20	27	30	---	---	---	---	---
HKSC08XC- 240 V		33.3	44	45	---	---	---	---	---
HKSC10XC- 240 V		40.0	52	60	---	---	---	---	---
ARUF31B14AC		0/0	2.2/2.2	15/15	---	---	---	---	---
HKSX03XC- 208 V	No Breaker	10.8	16	20	---	---	---	---	---
HKSX05XC- 208 V		17.3	24	25	---	---	---	---	---
HKSX06XC- 208 V		21.7	29	30	---	---	---	---	---
HKSX08XC- 208 V		28.9	38	40	---	---	---	---	---
HKSX10XC- 208 V		34.7	46	50	---	---	---	---	---
HKSC05XC- 208 V	Breaker	17.3	24	25	---	---	---	---	---
HKSC08XC- 208 V		28.9	38	40	---	---	---	---	---
HKSC10XC- 208 V		34.7	46	50	---	---	---	---	---
HKSC15XA- 208 V		34.7	46	50	17.3	22	25	67	70

See notes on page 12.

Heater Kit Model		Circuit 1			Circuit 2			Single-Point Kit	
		Amps	MCA[1]	MOP[2]	Amps	MCA[1]	MOP[2]	MCA[1]	MOP[2]
HKSX03XC- 240 V	No Breaker	12.5	18	20	---	---	---	---	---
HKSX05XC- 240 V		20	27	30	---	---	---	---	---
HKSX06XC- 240 V		25	33	35	---	---	---	---	---
HKSX08XC- 240 V		33.3	44	45	---	---	---	---	---
HKSX10XC- 240 V		40.0	52	60	---	---	---	---	---
HKSC05XC- 240 V	Breaker	20	27	30	---	---	---	---	---
HKSC08XC- 240 V		33.3	44	45	---	---	---	---	---
HKSC10XC- 240 V		40.0	52	60	---	---	---	---	---
HKSC15XB- 240 V		40.0	52	60	20	25	25	77	80
ARUF37C14AD		0/0	3.6/3.6	15/15	---	---	---	---	---
HKSX03XC- 208 V	No Breaker	10.8	17	20	---	---	---	---	---
HKSX05XC- 208 V		17.3	25.2	30	---	---	---	---	---
HKSX06XC- 208 V		21.7	31	35	---	---	---	---	---
HKSX08XC- 208 V		28.9	40	40	---	---	---	---	---
HKSX10XC- 208 V		34.7	46.9	50	---	---	---	---	---
HKSC05XC- 208 V	Breaker	17.3	25.2	30	---	---	---	---	---
HKSC08XC- 208 V		28.9	40	40	---	---	---	---	---
HKSC10XC- 208 V		34.7	46.9	50	---	---	---	---	---
HKSC15XA- 208 V		34.7	46.9	50	17.3	22	25	68.6	70
HKSC19CA- 208 V		34.7	46.9	50	34.7	43	45	90.2	100
HKSC15XF- 208 V ^		0	3.6	15	30	38	40	---	---
HKSC20XF- 208 V ^		0	3.6	15	38	47	50	---	---
HKSX03XC- 240 V	No Breaker	12.5	19	20	---	---	---	---	---
HKSX05XC- 240 V		20	29	30	---	---	---	---	---
HKSX06XC- 240 V		25	35	35	---	---	---	---	---
HKSX08XC- 240 V		33.3	45.2	50	---	---	---	---	---
HKSX10XC- 240 V		40	53.6	60	---	---	---	---	---
HKSC05XC- 240 V	Breaker	20	29	30	---	---	---	---	---
HKSC08XC- 240 V		33.3	45.2	50	---	---	---	---	---
HKSC10XC- 240 V		40	53.6	60	---	---	---	---	---
HKSC15XB- 240 V		40	53.6	60	20	25	25	78.6	80
HKSC19CB- 240 V		40	53.6	60	40	50	50	104	110
HKSC15XF- 240 V ^		0	3.6	15	34.6	43	45	---	---
HKSC20XF- 240 V ^		0	3.6	15	43	54	60	---	---
ARUF37D14AD		0/0	3.6/3.6	15/15	---	---	---	---	---
HKSX03XC- 208 V	No Breaker	10.8	17	20	---	---	---	---	---
HKSX05XC- 208 V		17.3	25.2	30	---	---	---	---	---
HKSX06XC- 208 V		21.7	31	35	---	---	---	---	---
HKSX08XC- 208 V		28.9	40	40	---	---	---	---	---
HKSX10XC- 208 V		34.7	46.9	50	---	---	---	---	---

See notes on page 12.

Heater Kit Model		Circuit 1			Circuit 2			Single-Point Kit	
		Amps	MCA[1]	MOP[2]	Amps	MCA[1]	MOP[2]	MCA[1]	MOP[2]
HKSC05XC- 208 V		17.3	25.2	30	---	---	---	---	---
HKSC08XC- 208 V		28.9	40	40	---	---	---	---	---
HKSC10XC- 208 V		34.7	46.9	50	---	---	---	---	---
HKSC15XA- 208 V	Breaker	34.7	46.9	50	17.3	22	25	68.6	70
HKSC20DA- 208 V		34.7	46.9	50	34.7	43	45	90.2	100
HKSC15XF- 208 V ^		0	3.6	15	30	38	40	---	---
HKSC20XF- 208 V ^		0	3.6	15	38	47	50	---	---
HKSX03XC- 240 V		12.5	19	20	---	---	---	---	---
HKSX05XC- 240 V		20	29	30	---	---	---	---	---
HKSX06XC- 240 V	No Breaker	25	35	35	---	---	---	---	---
HKSX08XC- 240 V		33.3	45.2	50	---	---	---	---	---
HKSX10XC- 240 V		40	53.6	60	---	---	---	---	---
HKSC05XC- 240 V		20	29	30	---	---	---	---	---
HKSC08XC- 240 V		33.3	45.2	50	---	---	---	---	---
HKSC10XC- 240 V		40	53.6	60	---	---	---	---	---
HKSC15XB- 240 V	Breaker	40	53.6	60	20	25	25	78.6	80
HKSC20DB- 240 V		40	53.6	60	40	50	50	104	110
HKSC15XF- 240 V ^		0	3.6	15	34.6	43	45	---	---
HKSC20XF- 240 V ^		0	3.6	15	43	54	60	---	---
ARUF43C14AD		0/0	3.6/3.6	15/15	---	---	---	---	---
HKSX03XC- 208 V		10.8	17	20	---	---	---	---	---
HKSX05XC- 208 V		17.3	25.2	30	---	---	---	---	---
HKSX06XC- 208 V	No Breaker	21.7	31	35	---	---	---	---	---
HKSX08XC- 208 V		28.9	40	40	---	---	---	---	---
HKSX10XC- 208 V		34.7	46.9	50	---	---	---	---	---
HKSC05XC- 208 V		17.3	25.2	30	---	---	---	---	---
HKSC08XC- 208 V		28.9	40	40	---	---	---	---	---
HKSC10XC- 208 V		34.7	46.9	50	---	---	---	---	---
HKSC15XA- 208 V	Breaker	34.7	46.9	50	17.3	22	25	68.6	70
HKSC19CA- 208 V		34.7	46.9	50	34.7	43	45	90.2	100
HKSC15XF- 208 V ^		0	3.6	15	30	38	40	---	---
HKSC20XF- 208 V ^		0	3.6	15	38	47	50	---	---
HKSX03XC- 240 V		12.5	19	20	---	---	---	---	---
HKSX05XC- 240 V		20	29	30	---	---	---	---	---
HKSX06XC- 240 V	No Breaker	25	35	35	---	---	---	---	---
HKSX08XC- 240 V		33.3	45.2	50	---	---	---	---	---
HKSX10XC- 240 V		40	53.6	60	---	---	---	---	---
HKSC05XC- 240 V		20	29	30	---	---	---	---	---
HKSC08XC- 240 V		33.3	45.2	50	---	---	---	---	---
HKSC10XC- 240 V		40	53.6	60	---	---	---	---	---
HKSC15XB- 240 V	Breaker	40	53.6	60	20	25	25	78.6	80
HKSC19CB- 240 V		40	53.6	60	40	50	50	104	110
HKSC15XF- 240 V ^		0	3.6	15	34.6	43	45	---	---
HKSC20XF- 240 V ^		0	3.6	15	43	54	60	---	---

See notes on page 12.

Heater Kit Model		Circuit 1			Circuit 2			Single-Point Kit	
		Amps	MCA[1]	MOP[2]	Amps	MCA[1]	MOP[2]	MCA[1]	MOP[2]
ARUF43D14AC		0/0	4/4	15/15	---	---	---	---	---
HKSX03XC- 208 V	No Breaker	10.8	18	20	---	---	---	---	---
HKSX05XC- 208 V		17.3	26	30	---	---	---	---	---
HKSX06XC- 208 V		21.7	31	35	---	---	---	---	---
HKSX08XC- 208 V		28.9	40.5	45	---	---	---	---	---
HKSX10XC- 208 V		34.7	48	50	---	---	---	---	---
HKSC05XC- 208 V	Breaker	17.3	26	30	---	---	---	---	---
HKSC08XC- 208 V		28.9	40.5	45	---	---	---	---	---
HKSC10XC- 208 V		34.7	48	50	---	---	---	---	---
HKSC15XA- 208 V		34.7	48	50	17.3	22	25	69	70
HKSC20DA- 208 V		34.7	48	50	34.7	43	45	91	100
HKSC15XF- 208 V ^		0	4	15	30	38	40	---	---
HKSC20XF- 208 V ^		0	4	15	38	47	50	---	---
HKSX03XC- 240 V	No Breaker	12.5	20	20	---	---	---	---	---
HKSX05XC- 240 V		20	29	30	---	---	---	---	---
HKSX06XC- 240 V		25	36	40	---	---	---	---	---
HKSX08XC- 240 V		33.3	46	50	---	---	---	---	---
HKSX10XC- 240 V		40	54	60	---	---	---	---	---
HKSC05XC- 240 V	Breaker	20	29	30	---	---	---	---	---
HKSC08XC- 240 V		33.3	46	50	---	---	---	---	---
HKSC10XC- 240 V		40	54	60	---	---	---	---	---
HKSC15XB- 240 V		40	54	60	20	25	25	79	80
HKSC20DB- 240 V		40	54	60	40	50	50	104	110
HKSC15XF- 240 V ^		0	4	15	34.6	43	45	---	---
HKSC20XF- 240 V ^		0	4	15	43	54	60	---	---
ARUF47D14AC		0/0	4/4	15/15	---	---	---	---	---
HKSX03XC- 208 V	No Breaker	10.8	18	20	---	---	---	---	---
HKSX05XC- 208 V		17.3	26	30	---	---	---	---	---
HKSX06XC- 208 V		21.7	31	35	---	---	---	---	---
HKSX08XC- 208 V		28.9	40.5	45	---	---	---	---	---
HKSX10XC- 208 V		34.7	48	50	---	---	---	---	---
HKSC05XC- 208 V	Breaker	17.3	26	30	---	---	---	---	---
HKSC08XC- 208 V		28.9	40.5	45	---	---	---	---	---
HKSC10XC- 208 V		34.7	48	50	---	---	---	---	---
HKSC15XA- 208 V		34.7	48	50	17.3	22	25	69	70
HKSC20DA- 208 V		34.7	48	50	34.7	44	45	91	100
HKSC15XF- 208 V ^		0	4	15	30	38	40	---	---
HKSC20XF- 208 V ^		0	4	15	38	47	50	---	---
HKSX03XC- 240 V	No Breaker	12.5	20	20	---	---	---	---	---
HKSX05XC- 240 V		20	29	30	---	---	---	---	---
HKSX06XC- 240 V		25	36	40	---	---	---	---	---
HKSX08XC- 240 V		33.3	46	50	---	---	---	---	---
HKSX10XC- 240 V		40	54	60	---	---	---	---	---

See notes on page 12.

Heater Kit Model		Circuit 1			Circuit 2			Single-Point Kit	
		Amps	MCA[1]	MOP[2]	Amps	MCA[1]	MOP[2]	MCA[1]	MOP[2]
HKSC05XC- 240 V		20	29	30	---	---	---	---	---
HKSC08XC- 240 V		33.3	46	50	---	---	---	---	---
HKSC10XC- 240 V		40	54	60	---	---	---	---	---
HKSC15XB- 240 V	Breaker	40	54	60	20	25	25	79	80
HKSC20DB- 240 V		40	54	60	40	50	50	104	110
HKSC15XF- 240 V ^		0	4	15	34.6	43	45	---	---
HKSC20XF- 240 V ^		0	4	15	43	54	60	---	---
ARUF49C14AD		0/0	4/4	15/15	---	---	---	---	---
HKSX03XC- 208 V		10.8	17	20	---	---	---	---	---
HKSX05XC- 208 V		17.3	26	30	---	---	---	---	---
HKSX06XC- 208 V	No Breaker	21.7	31	35	---	---	---	---	---
HKSX08XC- 208 V		28.9	40	40	---	---	---	---	---
HKSX10XC- 208 V		34.7	47	50	---	---	---	---	---
HKSC05XC- 208 V		17.3	26	30	---	---	---	---	---
HKSC08XC- 208 V		28.9	40	40	---	---	---	---	---
HKSC10XC- 208 V		34.7	47	50	---	---	---	---	---
HKSC15XA- 208 V	Breaker	34.7	47	50	17.3	22	25	69	70
HKSC19CA- 208 V		34.7	47	50	34.7	43	45	91	100
HKSC15XF- 208 V ^		0	4	15	30	38	40	---	---
HKSC20XF- 208 V ^		0	4	15	38	47	50	---	---
HKSX03XC- 240 V		12.5	20	20	---	---	---	---	---
HKSX05XC- 240 V		20	29	30	---	---	---	---	---
HKSX06XC- 240 V	No Breaker	25	35	40	---	---	---	---	---
HKSX08XC- 240 V		33.3	46	50	---	---	---	---	---
HKSX10XC- 240 V		40	54	60	---	---	---	---	---
HKSC05XC- 240 V		20	29	30	---	---	---	---	---
HKSC08XC- 240 V		33.3	46	50	---	---	---	---	---
HKSC10XC- 240 V		40	54	60	---	---	---	---	---
HKSC15XB- 240 V	Breaker	40	54	60	20	25	25	79	80
HKSC19CB- 240 V		40	54	60	40	50	50	104	110
HKSC15XF- 240 V ^		0	4	15	34.6	43	45	---	---
HKSC20XF- 240 V ^		0	4	15	43	54	60	---	---
ARUF49D14AC		0/0	4/4	15/15	---	---	---	---	---
HKSX03XC- 208 V		10.8	18	20	---	---	---	---	---
HKSX05XC- 208 V		17.3	26	30	---	---	---	---	---
HKSX06XC- 208 V	No Breaker	21.7	31	35	---	---	---	---	---
HKSX08XC- 208 V		28.9	40.5	45	---	---	---	---	---
HKSX10XC- 208 V		34.7	48	50	---	---	---	---	---

See notes on page 12.

Heater Kit Model		Circuit 1			Circuit 2			Single-Point Kit	
		Amps	MCA[1]	MOP[2]	Amps	MCA[1]	MOP[2]	MCA[1]	MOP[2]
HKSC05XC- 208 V	Breaker	17.3	26	30	---	---	---	---	---
HKSC08XC- 208 V		28.9	40.5	45	---	---	---	---	---
HKSC10XC- 208 V		34.7	48	50	---	---	---	---	---
HKSC15XA- 208 V		34.7	48	50	17.3	22	25	69	70
HKSC20DA- 208 V		34.7	48	50	34.7	43	45	91	100
HKSC15XF- 208 V ^		0	4	15	30	38	40	---	---
HKSC20XF- 208 V ^		0	4	15	38	47	50	---	---
HKSX03XC- 240 V	No Breaker	12.5	20	20	---	---	---	---	---
HKSX05XC- 240 V		20	29	30	---	---	---	---	---
HKSX06XC- 240 V		25	36	40	---	---	---	---	---
HKSX08XC- 240 V		33.3	46	50	---	---	---	---	---
HKSX10XC- 240 V		40	54	60	---	---	---	---	---
HKSC05XC- 240 V	Breaker	20	29	30	---	---	---	---	---
HKSC08XC- 240 V		33.3	46	50	---	---	---	---	---
HKSC10XC- 240 V		40	54	60	---	---	---	---	---
HKSC15XB- 240 V		40	54	60	20	25	25	79	80
HKSC20DB- 240 V		40	54	60	40	50	50	104	110
HKSC15XF- 240 V ^		0	4	15	34.6	43	45	---	---
HKSC20XF- 240 V ^		0	4	15	43	54	60	---	---
ARUF61D14AC		0/0	6/6	15/15	---	---	---	---	---
HKSX03XC- 208 V	No Breaker	10.8	19	20	---	---	---	---	---
HKSX05XC- 208 V		17.3	27	30	---	---	---	---	---
HKSX06XC- 208 V		21.7	33	35	---	---	---	---	---
HKSX08XC- 208 V		28.9	42	45	---	---	---	---	---
HKSX10XC- 208 V		34.7	49	50	---	---	---	---	---
HKSC05XC- 208 V	Breaker	17.3	27	30	---	---	---	---	---
HKSC08XC- 208 V		28.9	42	45	---	---	---	---	---
HKSC10XC- 208 V		34.7	49	50	---	---	---	---	---
HKSC15XA- 208 V		34.7	49	50	17.3	22	25	71	80
HKSC20DA- 208 V		34.7	49	50	34.7	43	45	92	100
HKSC15XF- 208 V ^		0	6	15	30	38	40	---	---
HKSC20XF- 208 V ^		0	6	15	38	47	50	---	---
HKSC25DA- 208 V		52	71	80	35	43	45	114	125
HKSX03XC- 240 V	No Breaker	12.5	21	25	---	---	---	---	---
HKSX05XC- 240 V		20	31	35	---	---	---	---	---
HKSX06XC- 240 V		25	37	40	---	---	---	---	---
HKSX08XC- 240 V		33.3	47	50	---	---	---	---	---
HKSX10XC- 240 V		40	56	60	---	---	---	---	---

See notes on page 12.

Heater Kit Model		Circuit 1			Circuit 2			Single-Point Kit	
		Amps	MCA[1]	MOP[2]	Amps	MCA[1]	MOP[2]	MCA[1]	MOP[2]
HKSC05XC- 240 V	Breaker	20	31	35	---	---	---	---	---
HKSC08XC- 240 V		33.3	47	50	---	---	---	---	---
HKSC10XC- 240 V		40	56	60	---	---	---	---	---
HKSC15XB- 240 V		40	56	60	20	25	25	81	90
HKSC20DB- 240 V		40	56	60	40	50	50	106	110
HKSC15XF- 240 V ^		0	6	15	34.6	43	45	---	---
HKSC20XF- 240 V ^		0	6	15	43	54	60	---	---
HKSC25DB- 240 V		60	81	90	40	50	50	131	150

[1] Minimum Circuit Ampacity (Heater Amps + Motor Amps) X 1.25
[2] Maximum Overcurrent Protection = 2.25 X Motor Amps + Heater Amps
--- indicates Not Required
Note : The 208 or 240 in the heat kit part number field is for clarification of the nominal voltage for this model.
^ Three Phase
[3] Notation is correct as XB because technically the 240V heater kit application can be used here without any issues.

Heating kW Correction Factor

Supply Voltage	240	230	220	210	208
Correction Factor	1.00	0.92	0.84	0.77	0.75

Multiply the 240-volt heating capacity by correction factors.

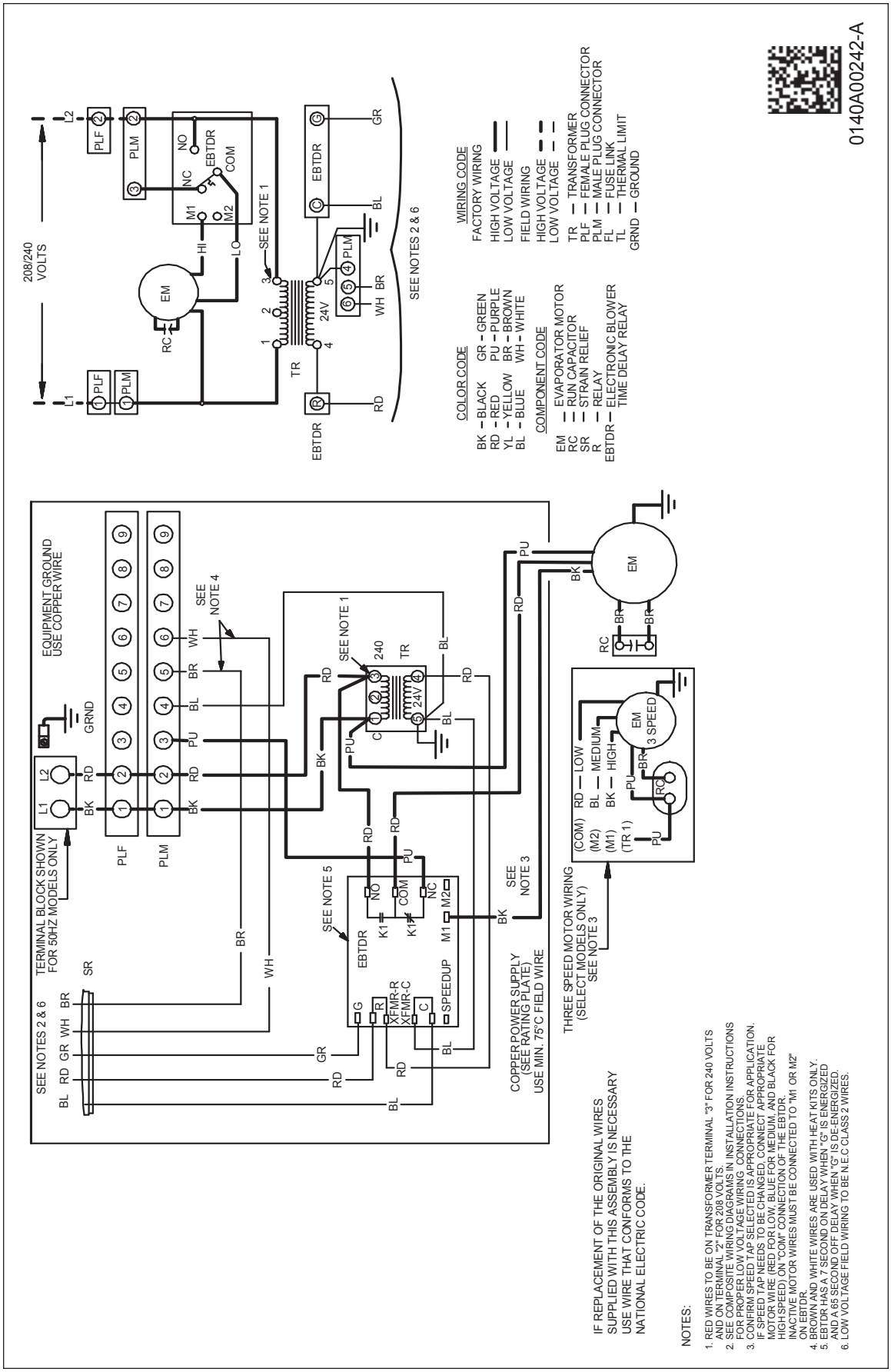

IF REPLACEMENT OF THE ORIGINAL WIRES SUPPLIED WITH THIS ASSEMBLY IS NECESSARY USE WIRE THAT CONFORMS TO THE NATIONAL ELECTRIC CODE.

NOTES:

1. RED WIRES TO BE ON TRANSFORMER TERMINAL "3" FOR 240 VOLTS AND ON TERMINAL "2" FOR 208 VOLTS.
2. SEE COMPOSITE WIRING DIAGRAMS IN INSTALLATION INSTRUCTIONS FOR PROPER LOW VOLTAGE WIRING CONNECTIONS.
3. CONFIRM SPEED TAP SELECTED IS APPROPRIATE FOR APPLICATION. IF SPEED TAP NEEDS TO BE CHANGED, CONNECT APPROPRIATE MOTOR WIRE (RED FOR LOW, BLUE FOR MEDIUM, AND BLACK FOR HIGH SPEED) ON "COM" CONNECTION OF THE EBTDR. INACTIVE MOTOR WIRES MUST BE CONNECTED TO "M1 OR M2" ON EBTDR.
4. BROWN AND WHITE WIRES ARE USED WITH HEAT KITS ONLY.
5. EBTDR HAS A 7 SECOND ON DELAY WHEN "G" IS ENERGIZED AND A 65 SECOND OFF DELAY WHEN "G" IS DE-ENERGIZED.
6. LOW VOLTAGE FIELD WIRING TO BE N.E.C CLASS 2 WIRES.

WARNING

High Voltage: Disconnect all power before servicing or installing this unit. Multiple power sources may be present. Failure to do so may cause property damage, personal injury, or death.

Wiring is subject to change. Always refer to the wiring diagram on the unit for the most up-to-date wiring.

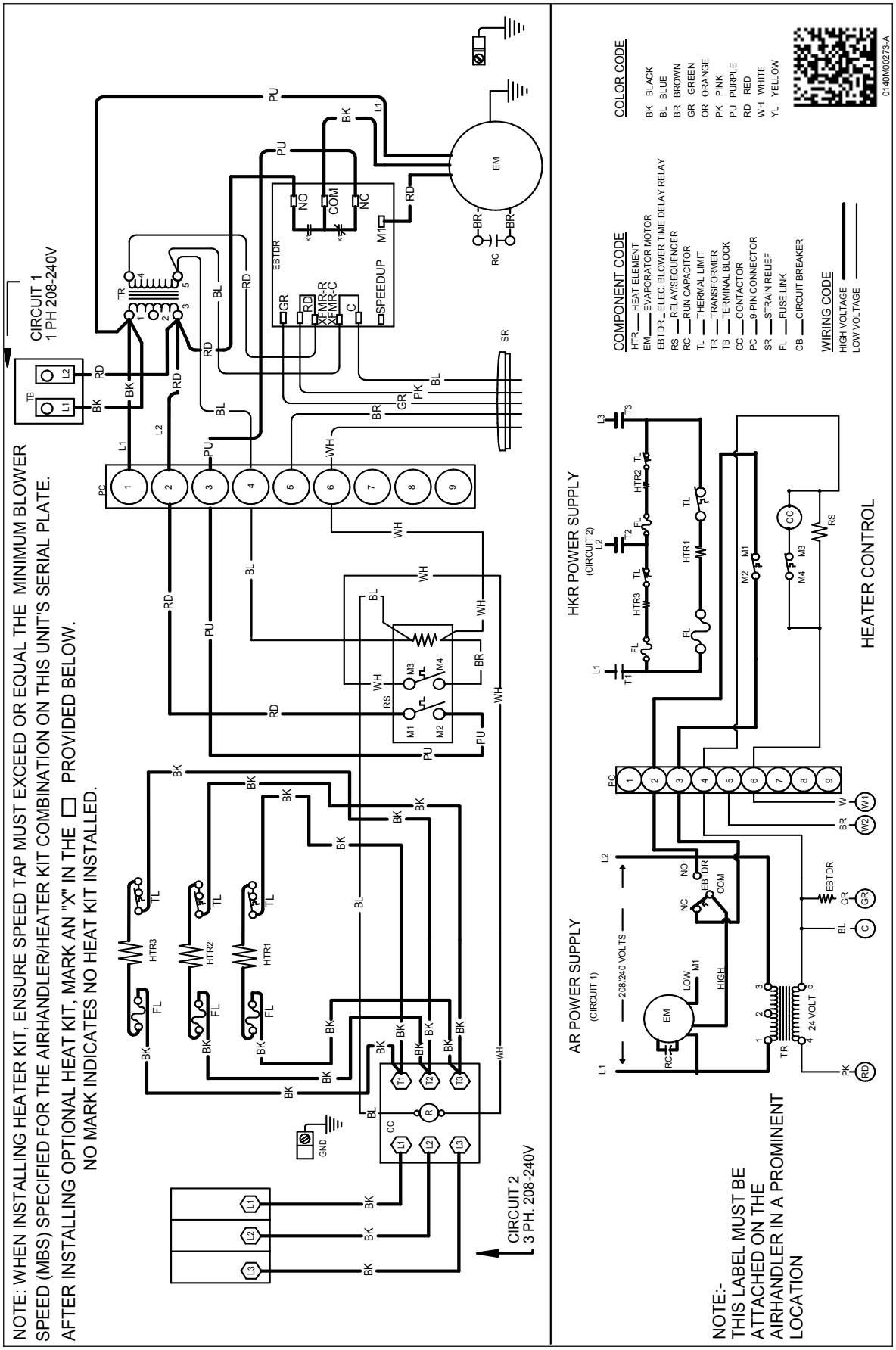

WARNING

High Voltage: Disconnect all power before servicing or installing this unit. Multiple power sources may be present. Failure to do so may cause property damage, personal injury, or death.

Wiring is subject to change. Always refer to the wiring diagram on the unit for the most up-to-date wiring.

EXPANSION VALVE KITS FOR AIR CONDITIONING AND HEAT PUMP APPLICATIONS

KIT NUMBER	DESCRIPTION	APPLICATION	REFRIGERANT	TONNAGE: OUTDOOR UNIT
TX2N4A	Non-bleed Valve	AC or HP	R-410A	1½- 2 Ton
TX3N4	Non-bleed Valve	AC or HP	R-410A	2½- 3 Ton
TX5N4	Non-bleed Valve	AC or HP	R-410A	3½- 5 Ton

DOWNFLOW INSULATION KIT

DFK-B	DFK-C	DFK-D
ARUF25B14**	ARUF37C14**	ARUF37D14**
ARUF29B14**	ARUF43C14**	ARUF43D14**
ARUF31B14**	ARUF49C14**	ARUF47D14**
		ARUF49D14**
		ARUF61D14**

DRAIN PORT PLUG

KIT NUMBER	DESCRIPTION	APPLICATION
DPK1	Side Drain Port Plug	All Models

FILTERS

CHASSIS	PART #	SIZE
B	ALFH16201E	16.0” x 20.0”
C	ALFH1912201E	19.5” x 20.0”
D	ALFH20231E	23.0” x 20.0”

SINGLE POINT WIRING KIT (SPW-01)

HEATER KIT MODEL	SPWK-B	SPWK-C	SPWK-D
HKSC15XA- 208 V	ARUF31B14**	ARUF37C14** ARUF43C14** ARUF49C14**	ARUF37D14** ARUF43D14** ARUF47D14** ARUF49D14** ARUF61D14**
HKSC15XB- 240 V			
HKSC19CA- 208 V			
HKSC19CB- 240 V			
HKSC20DA- 208 V			ARUF37D14** ARUF43D14** ARUF47D14** ARUF49D14** ARUF61D14**
HKSC20DB- 240 V	ARUF37C14**		
HKSC25DA- 208 V			ARUF61D14**
HKSC25DB- 240 V			

The manufacturing entity reserves the right to discontinue or change the specifications or design at any time without notice and without incurring any obligations.