DAIKIN

DX16TC

Up to 17 SEER
2 to 5 Tons

High-Efficiency, Communicating, Split System Air Conditioner

Contents

Nomenclature 2
Product Specifications 3
Expanded Cooling Data 4
AHRI Ratings (see note) 20
Dimensions 34
Wiring Diagram 35
Accessories 36

Standard Features

- Two-Stage Copeland® Ultra-Tech scroll compressor
- High-density foam compressor sound blanket
- Compatible with Daikin *One+* smart thermostat and other Daikin communicating equipment
- Advanced Copeland® CoreSense™ technology
- High-efficiency PSC or ECM condenser fan motor
- In communicating mode, two low-voltage wires to outdoor unit required
- Diagnostic indicator lights and fault code storage
- Color-coded terminal strip
- Factory-installed filter drier
- Coil and ambient temperature sensors
- Sweat connection service valves with easy access to gauge ports
- AHRI Certified; ETL Listed

Cabinet Features

- Heavy-gauge galvanized-steel cabinet with grille-style sound control top design
- Custom Nickel Gray powder-paint finish
- 500-hour salt-spray tested
- Wire fan discharge grille
- Steel louver coil guard
- Top and side maintenance access
- Single-panel access to controls with space provided for field-installed accessories
- When properly anchored, meets the 2017 Florida Building Code unit integrity requirements for hurricane-type winds (Anchor bracket kits available.)

* Complete warranty details available from your local dealer or at www.daikincomfort.com. To receive the 12-Year Unit Replacement Limited Warranty and 12-Year Parts Limited Warranty, online registration must be completed within 60 days of installation. Additional requirements for annual maintenance are required for the Unit Replacement Limited Warranty. Online registration and some of the additional requirements are not required in California or Québec.

D	X	16	T	C	036	1	AA
1	2	3,4	5	6	7,8,9	10	11,12

Brand

D - Daikin

Type

X - AC R-410A

Z - HP R-410A

SEER

13 - 13 SEER

14 - 14 SEER

16 - 16 SEER

18 - 18 SEER

20 - 20 SEER

Compressor

S - Single Stage

T - Two Stage

Engineering

Major & Minor revisions

* Not used for inventory control.

Voltage

1 - 208/230 V Single-Phase 60 Hz

Nominal Tonnage

024 - 2 tons

036 - 3 tons

048 - 4 tons

060 - 5 tons

Feature Set

A - Base

C - Communicating

D - Deluxe

N - Nominal

	DX16TC 0241C*	DX16TC 0361C*	DX16TC 0481C*	DX16TC 0601C*
Cooling Capacity				
Nominal Cooling (BTU/h)	24,000	36,000	48,000	60,000
Decibels	71/70	71/70	72/71	74/70
Compressor				
RLA	10.0	14.8	20.4	22.9
LRA	62.9	84.2	122.1	147.2
Condenser Fan Motor				
Horsepower (RPM)	1/6	1/6	1/6	1/3
FLA	1.1	1.2	1.2	2.8
Refrigeration System				
Refrigerant Line Size				
Liquid Line Size (“O.D.)	⅜"	⅜"	⅜"	⅜"
Suction Line Size (“O.D.)	¾"	⅞"	1⅛"	1⅛"
Refrigerant Connection Size				
Liquid Valve Size (“O.D.)	⅜"	⅜"	⅜"	⅜"
Suction Valve Size (“O.D.)	¾"	¾"	⅞"	⅞"
Valve Connection Type	Sweat	Sweat	Sweat	Sweat
Refrigerant Charge (oz.)	92	114	177	191
Electrical Data				
Voltage-Phase-Hz	208/230-1	208/230-1-60	208/230-1-60	208/230-1-60
Minimum Circuit Ampacity [2]	13.6	19.7	26.7	31.4
Max. Overcurrent Protection [3]	20	30	45	50
Min / Max Volts	197/253	197/253	197/253	197/253
Power Supply	½" or ¾"	½" or ¾"	½" or ¾"	½" or ¾"
Equipment Weight (lbs)	180	201	263	304
Ship Weight (lbs)	197	223	285	326
ENERGY STAR® Certified	ENERGY STAR	ENERGY STAR	ENERGY STAR	ENERGY STAR

^ **Energy Star Notes**

- Proper sizing and installation of equipment is critical to achieving optimal performance. Split system air conditioners and heat pumps must be matched with appropriate coil components to meet ENERGY STAR criteria. Ask your contractor for details or visit www.energystar.gov.
- The www.energystar.gov website provides up-to-date system combinations certified to meet ENERGY STAR requirements. See Pages 20 for all ENERGY STAR certified combinations as of this document’s revision date.

[1] Tested and rated in accordance with AHRI Standard 210/240

[2] Wire size should be determined in accordance with National Electrical Codes; extensive wire runs will require larger wire sizes

[3] Must use time-delay fuses or HACR-type circuit breakers of the same size as noted.

Notes

- Always check the S&R plate for electrical data on the unit being installed.
- Installer will need to supply ⅞” to 1⅛” adapters for suction line connections.
- Unit is charged with refrigerant for 15’ of ⅜” liquid line. System charge must be adjusted per Installation Instructions Final Charge Procedure.
- Installation of these units requires the specified TXV Kit to be installed on the indoor coil. THE SPECIFIED TXV IS DETERMINED BY THE OUTDOOR UNIT NOT THE INDOOR COIL.

Expanded Cooling Data — DX16TC0241C*+CA*F3137*6A*+EEP+TXV - High Stage

			Outdoor Ambient Temperature																							
			65ºF				75ºF				85ºF				95ºF				105ºF				115ºF			
			Entering Indoor Wet Bulb Temperature																							
IDB	Airflow		59	63	67	71	59	63	67	71	59	63	67	71	59	63	67	71	59	63	67	71	59	63	67	71
70	720	MBh	24.3	24.7	25.4	-	24.1	24.4	25.2	-	23.5	23.8	24.5	-	22.4	22.7	23.5	-	21.1	21.4	22.1	-	19.8	20.2	20.9	-
		S/T	0.62	0.55	0.41	-	0.63	0.55	0.42	-	0.66	0.58	0.44	-	1.00	0.60	0.46	-	1.00	0.62	0.48	-	1.00	0.67	0.54	-
		ΔT	21	19	15	-	21	19	15	-	21	19	15	-	21	19	15	-	20	18	15	-	22	20	16	-
		Lo PR	126	128	131	-	134	135	138	-	140	142	145	-	146	148	151	-	152	153	156	-	159	160	163	-
		Hi PR	242	243	244	-	280	281	283	-	320	321	322	-	363	364	365	-	409	410	412	-	458	459	461	-
		Amps	4.8	4.8	4.8	-	5.5	5.5	5.5	-	6.2	6.2	6.2	-	7.0	7.0	7.0	-	7.9	7.9	7.9	-	9.0	9.0	9.0	-
		KW	1.40	1.40	1.40	-	1.56	1.55	1.55	-	1.73	1.73	1.72	-	1.91	1.91	1.91	-	2.12	2.12	2.11	-	2.36	2.36	2.36	-
	800	MBh	24.6	24.9	25.7	-	24.4	24.7	25.4	-	23.7	24.1	24.8	-	22.6	23.0	23.7	-	21.3	21.7	22.4	-	20.1	20.4	21.2	-
		S/T	0.67	0.59	0.46	-	0.68	0.60	0.46	-	0.70	0.63	0.49	-	1.00	0.64	0.51	-	1.00	0.67	0.53	-	1.00	0.72	0.58	-
		ΔT	20	18	14	-	20	18	14	-	20	18	14	-	20	18	14	-	19	18	14	-	21	19	15	-
		Lo PR	128	129	132	-	135	137	140	-	142	143	147	-	148	149	152	-	153	155	158	-	160	162	165	-
		Hi PR	243	244	246	-	281	282	284	-	321	322	324	-	364	365	367	-	411	412	413	-	460	461	463	-
		Amps	4.9	4.8	4.8	-	5.5	5.5	5.5	-	6.3	6.3	6.2	-	7.1	7.1	7.1	-	8.0	8.0	8.0	-	9.0	9.0	9.0	-
		KW	1.41	1.41	1.40	-	1.56	1.56	1.56	-	1.73	1.73	1.73	-	1.92	1.92	1.91	-	2.12	2.12	2.12	-	2.37	2.37	2.36	-
	880	MBh	24.9	25.2	26.0	-	24.7	25.0	25.7	-	24.0	24.4	25.1	-	22.9	23.3	24.0	-	21.6	22.0	22.7	-	20.4	20.7	21.5	-
		S/T	0.70	0.62	0.49	-	0.71	0.63	0.49	-	1.00	0.65	0.52	-	1.00	0.67	0.54	-	1.00	0.70	0.56	-	1.00	0.75	0.61	-
		ΔT	19	17	13	-	19	17	13	-	19	17	14	-	19	17	13	-	19	17	13	-	20	18	14	-
		Lo PR	129	131	134	-	137	138	142	-	143	145	148	-	149	151	154	-	155	156	159	-	162	163	166	-
		Hi PR	245	246	248	-	283	284	286	-	323	324	326	-	366	367	369	-	412	413	415	-	462	463	464	-
		Amps	4.9	4.9	4.9	-	5.5	5.5	5.5	-	6.3	6.3	6.3	-	7.1	7.1	7.1	-	8.0	8.0	8.0	-	9.0	9.0	9.0	-
		KW	1.41	1.41	1.41	-	1.57	1.57	1.56	-	1.74	1.74	1.73	-	1.92	1.92	1.92	-	2.13	2.13	2.13	-	2.37	2.37	2.37	-
75	720	MBh	24.3	24.7	25.4	26.5	24.1	24.5	25.2	26.3	23.5	23.8	24.6	25.7	22.4	22.7	23.5	24.6	21.1	21.4	22.1	23.2	19.8	20.2	20.9	22.0
		S/T	0.75	0.68	0.54	0.40	1.00	0.68	0.55	0.40	1.00	0.71	0.57	0.43	1.00	0.73	0.59	0.45	1.00	0.75	0.61	0.47	1.00	1.00	0.67	0.52
		ΔT	25	23	19	16	25	23	19	16	25	23	20	16	25	23	19	16	25	23	19	15	26	24	20	17
		Lo PR	126	128	131	136	134	135	138	144	140	142	145	151	146	148	151	156	152	153	156	162	159	160	163	169
		Hi PR	242	243	245	249	280	281	283	287	320	321	323	327	363	364	366	370	409	410	412	416	459	460	461	466
		Amps	4.8	4.8	4.8	4.9	5.5	5.5	5.5	5.5	6.2	6.2	6.2	6.3	7.0	7.0	7.0	7.1	7.9	7.9	7.9	8.0	9.0	9.0	9.0	9.0
		KW	1.40	1.40	1.40	1.41	1.55	1.55	1.55	1.56	1.73	1.72	1.72	1.73	1.91	1.91	1.91	1.92	2.12	2.12	2.11	2.13	2.36	2.36	2.36	2.37
	800	MBh	24.6	24.9	25.7	26.8	24.4	24.7	25.4	26.6	23.7	24.1	24.8	25.9	22.7	23.0	23.7	24.8	21.3	21.7	22.4	23.5	20.1	20.5	21.2	22.3
		S/T	0.80	0.72	0.59	0.44	1.00	0.73	0.59	0.45	1.00	0.75	0.62	0.47	1.00	0.77	0.64	0.49	1.00	1.00	0.66	0.52	1.00	1.00	0.71	0.57
		ΔT	24	22	19	15	24	22	18	15	24	22	19	15	24	22	18	15	24	22	18	14	25	23	19	16
		Lo PR	128	129	132	138	135	137	140	145	142	143	147	152	148	149	152	158	153	155	158	163	160	162	165	170
		Hi PR	244	245	246	251	282	283	284	289	322	323	324	328	364	366	367	371	411	412	414	418	460	461	463	467
		Amps	4.9	4.8	4.8	4.9	5.5	5.5	5.5	5.6	6.3	6.3	6.2	6.3	7.1	7.1	7.0	7.1	8.0	8.0	7.9	8.0	9.0	9.0	9.0	9.1
		KW	1.41	1.41	1.40	1.42	1.56	1.56	1.56	1.57	1.73	1.73	1.73	1.74	1.92	1.92	1.91	1.92	2.12	2.12	2.12	2.13	2.37	2.36	2.36	2.37
	880	MBh	24.9	25.2	26.0	27.1	24.7	25.0	25.7	26.9	24.0	24.4	25.1	26.2	23.0	23.3	24.0	25.1	21.6	22.0	22.7	23.8	20.4	20.8	21.5	22.6
		S/T	0.83	0.75	0.62	0.47	1.00	0.76	0.62	0.48	1.00	0.78	0.65	0.50	1.00	0.80	0.67	0.52	1.00	1.00	0.69	0.55	1.00	1.00	0.74	0.60
		ΔT	23	21	18	14	23	21	18	14	24	22	18	14	23	21	18	14	23	21	17	14	24	22	19	15
		Lo PR	129	131	134	139	137	138	142	147	144	145	148	154	149	151	154	159	155	156	159	165	162	163	166	172
		Hi PR	245	246	248	252	283	284	286	290	323	324	326	330	366	367	369	373	412	413	415	419	462	463	465	469
		Amps	4.9	4.9	4.9	4.9	5.5	5.5	5.5	5.6	6.3	6.3	6.3	6.3	7.1	7.1	7.1	7.1	8.0	8.0	8.0	8.0	9.0	9.0	9.0	9.1
		KW	1.41	1.41	1.41	1.42	1.57	1.57	1.56	1.57	1.74	1.74	1.73	1.75	1.92	1.92	1.92	1.93	2.13	2.13	2.13	2.14	2.37	2.37	2.37	2.38

IDB = Entering Indoor Dry Bulb Temperature

Shaded area reflects ACCA (TVA) conditions

Amps = outdoor unit amps (comp.+fan)

High and low pressures are measured at the liquid and suction service valves.

kW = Total system power

Expanded Cooling Data — DX16TC0241C*+CA*F3137*6A*+EEP+TXV - High Stage

			Outdoor Ambient Temperature																							
			65ºF				75ºF				85ºF				95ºF				105ºF				115ºF			
			Entering Indoor Wet Bulb Temperature																							
IDB	Airflow		59	63	67	71	59	63	67	71	59	63	67	71	59	63	67	71	59	63	67	71	59	63	67	71
80	720	MBh	24.5	24.8	25.5	26.6	24.2	24.6	25.3	26.4	23.6	24.0	24.7	25.8	22.5	22.9	23.6	24.7	21.2	21.5	22.3	23.4	20.0	20.3	21.0	22.1
		S/T	1.00	0.80	0.67	0.52	1.00	0.81	0.67	0.53	1.00	0.84	0.70	0.55	1.00	1.00	0.72	0.57	1.00	1.00	0.74	0.60	1.00	1.00	0.79	0.65
		ΔT	29	27	24	20	29	27	24	20	30	28	24	20	29	27	24	20	29	27	23	20	30	28	25	21
		Lo PR	127	128	131	137	134	136	139	144	141	143	146	151	147	148	151	157	152	154	157	162	159	161	164	169
		Hi PR	242	243	245	249	280	282	283	287	320	321	323	327	363	364	366	370	410	411	412	417	459	460	462	466
		Amps	4.8	4.8	4.8	4.9	5.5	5.5	5.5	5.5	6.2	6.2	6.2	6.3	7.0	7.0	7.0	7.1	7.9	7.9	7.9	8.0	9.0	9.0	9.0	9.0
		KW	1.40	1.40	1.40	1.41	1.56	1.55	1.55	1.56	1.73	1.73	1.72	1.73	1.91	1.91	1.91	1.92	2.12	2.12	2.11	2.13	2.36	2.36	2.36	2.37
	800	MBh	24.7	25.1	25.8	26.9	24.5	24.8	25.6	26.7	23.9	24.2	24.9	26.0	22.8	23.1	**23.8**	25.0	21.5	21.8	22.5	23.6	20.2	20.6	21.3	22.4
		S/T	1.00	0.85	0.71	0.57	1.00	0.86	0.72	0.58	1.00	0.88	0.74	0.60	1.00	1.00	**0.76**	0.62	1.00	1.00	0.79	0.64	1.00	1.00	0.84	0.69
		ΔT	28	26	23	19	28	26	23	19	29	27	23	19	28	26	**23**	19	28	26	22	19	29	27	24	20
		Lo PR	128	130	133	138	136	137	141	146	142	144	147	153	148	150	**153**	158	154	155	158	164	161	162	165	171
		Hi PR	244	245	247	251	282	283	285	289	322	323	325	329	365	366	**368**	372	411	412	414	418	461	462	463	468
		Amps	4.9	4.8	4.8	4.9	5.5	5.5	5.5	5.6	6.3	6.3	6.2	6.3	7.1	7.1	**7.1**	7.1	8.0	8.0	8.0	8.0	9.0	9.0	9.0	9.1
		KW	1.41	1.41	1.40	1.42	1.56	1.56	1.56	1.57	1.73	1.73	1.73	1.74	1.92	1.92	**1.91**	1.93	2.12	2.12	2.12	2.13	2.37	2.37	2.36	2.37
	880	MBh	25.0	25.4	26.1	27.2	24.8	25.1	25.9	27.0	24.2	24.5	25.2	26.3	23.1	23.4	24.2	25.3	21.8	22.1	22.8	23.9	20.5	20.9	21.6	22.7
		S/T	1.00	0.88	0.74	0.60	1.00	0.89	0.75	0.60	1.00	1.00	0.77	0.63	1.00	1.00	0.79	0.65	1.00	1.00	0.82	0.67	1.00	1.00	0.87	0.72
		ΔT	28	26	22	18	28	26	22	18	28	26	22	18	28	26	22	18	27	25	22	18	28	27	23	19
		Lo PR	130	131	134	140	137	139	142	147	144	146	149	154	150	151	154	160	155	157	160	165	162	164	167	172
		Hi PR	246	247	248	253	284	285	286	291	324	325	326	331	367	368	369	373	413	414	416	420	462	463	465	469
		Amps	4.9	4.9	4.9	4.9	5.5	5.5	5.5	5.6	6.3	6.3	6.3	6.3	7.1	7.1	7.1	7.1	8.0	8.0	8.0	8.0	9.0	9.0	9.0	9.1
		KW	1.41	1.41	1.41	1.42	1.57	1.57	1.56	1.57	1.74	1.74	1.73	1.75	1.92	1.92	1.92	1.93	2.13	2.13	2.13	2.14	2.37	2.37	2.37	2.38
85	720	MBh	24.9	25.2	25.9	27.0	24.7	25.0	25.7	26.8	24.0	24.4	25.1	26.2	22.9	23.3	24.0	25.1	21.6	21.9	22.7	23.8	20.4	20.7	21.5	22.6
		S/T	1.00	0.91	0.77	0.63	1.00	1.00	0.78	0.63	1.00	1.00	0.80	0.66	1.00	1.00	0.82	0.68	1.00	1.00	1.00	0.70	1.00	1.00	1.00	0.75
		ΔT	33	31	28	24	33	31	28	24	33	31	28	24	33	31	27	24	33	31	27	23	34	32	28	25
		Lo PR	129	130	133	139	136	138	141	146	143	144	148	153	149	150	153	159	154	156	159	164	161	163	166	171
		Hi PR	244	245	246	250	282	283	284	289	321	323	324	328	364	365	367	371	411	412	414	418	460	461	463	467
		Amps	4.8	4.8	4.8	4.9	5.5	5.5	5.5	5.5	6.2	6.2	6.2	6.3	7.1	7.0	7.0	7.1	8.0	7.9	7.9	8.0	9.0	9.0	9.0	9.0
		KW	1.41	1.40	1.40	1.41	1.56	1.56	1.55	1.57	1.73	1.73	1.73	1.74	1.91	1.91	1.91	1.92	2.12	2.12	2.12	2.13	2.36	2.36	2.36	2.37
	800	MBh	25.1	25.5	26.2	27.3	24.9	25.3	26.0	27.1	24.3	24.6	25.3	26.5	23.2	23.5	24.3	25.4	21.9	22.2	22.9	24.0	20.6	21.0	21.7	22.8
		S/T	1.00	0.95	0.82	0.67	1.00	1.00	0.82	0.68	1.00	1.00	0.85	0.70	1.00	1.00	0.87	0.72	1.00	1.00	1.00	0.74	1.00	1.00	1.00	0.80
		ΔT	32	30	27	23	32	30	27	23	32	30	27	23	32	30	27	23	32	30	26	23	33	31	28	24
		Lo PR	130	132	135	140	138	139	142	148	144	146	149	154	150	152	155	160	156	157	160	166	163	164	167	173
		Hi PR	245	246	248	252	283	284	286	290	323	324	326	330	366	367	369	373	412	413	415	419	462	463	465	469
		Amps	4.9	4.9	4.9	4.9	5.5	5.5	5.5	5.6	6.3	6.3	6.3	6.3	7.1	7.1	7.1	7.1	8.0	8.0	8.0	8.0	9.0	9.0	9.0	9.1
		KW	1.41	1.41	1.41	1.42	1.56	1.56	1.56	1.57	1.74	1.73	1.73	1.74	1.92	1.92	1.92	1.93	2.13	2.13	2.12	2.14	2.37	2.37	2.37	2.38
	880	MBh	25.4	25.8	26.5	27.6	25.2	25.6	26.3	27.4	24.6	24.9	25.6	26.8	23.5	23.8	24.6	25.7	22.2	22.5	23.2	24.3	20.9	21.3	22.0	23.1
		S/T	1.00	0.98	0.84	0.70	1.00	1.00	0.85	0.71	1.00	1.00	0.88	0.73	1.00	1.00	0.90	0.75	1.00	1.00	1.00	0.77	1.00	1.00	1.00	0.83
		ΔT	31	29	26	22	31	29	26	22	32	30	26	22	31	29	26	22	31	29	26	22	32	30	27	23
		Lo PR	132	133	136	142	139	141	144	149	146	148	151	156	152	153	156	162	157	159	162	167	164	166	169	174
		Hi PR	247	248	249	254	285	286	288	292	325	326	327	332	368	369	370	375	414	415	417	421	463	464	466	470
		Amps	4.9	4.9	4.9	4.9	5.6	5.6	5.5	5.6	6.3	6.3	6.3	6.3	7.1	7.1	7.1	7.1	8.0	8.0	8.0	8.0	9.1	9.1	9.0	9.1
		KW	1.42	1.42	1.41	1.42	1.57	1.57	1.57	1.58	1.74	1.74	1.74	1.75	1.93	1.92	1.92	1.93	2.13	2.13	2.13	2.14	2.38	2.37	2.37	2.38

IDB = Entering Indoor Dry Bulb Temperature

Shaded area reflects AHRI (TVA) conditions

Amps = outdoor unit amps (comp.+fan)

High and low pressures are measured at the liquid and suction service valves.

kW = Total system power

Expanded Cooling Data — DX16TC0241C*+CA*F3137*6A*+EEP+TXV - Low Stage

			Outdoor Ambient Temperature																							
			65ºF				75ºF				85ºF				95ºF				105ºF				115ºF			
			Entering Indoor Wet Bulb Temperature																							
IDB	Airflow		59	63	67	71	59	63	67	71	59	63	67	71	59	63	67	71	59	63	67	71	59	63	67	71
70	540	MBh	17.5	17.7	18.3	-	17.3	17.6	18.1	-	16.9	17.1	17.6	-	16.1	16.3	16.9	-	15.1	15.4	15.9	-	14.3	14.5	15.0	-
		S/T	0.64	0.56	0.42	-	0.65	0.57	0.43	-	1.00	0.59	0.45	-	1.00	0.61	0.47	-	1.00	0.64	0.50	-	1.00	1.00	0.55	-
		ΔT	20	18	15	-	20	18	15	-	20	18	15	-	20	18	15	-	20	18	14	-	21	19	16	-
		Lo PR	130	131	134	-	137	139	142	-	144	146	149	-	150	152	155	-	156	157	161	-	163	165	168	-
		Hi PR	231	232	234	-	267	268	270	-	306	307	308	-	347	348	349	-	391	392	394	-	438	439	441	-
		Amps	3.0	3.0	3.0	-	3.5	3.5	3.4	-	3.9	3.9	3.9	-	4.4	4.4	4.4	-	5.0	5.0	5.0	-	5.7	5.7	5.6	-
		KW	0.88	0.88	0.88	-	0.98	0.98	0.98	-	1.09	1.09	1.08	-	1.20	1.20	1.20	-	1.33	1.33	1.33	-	1.48	1.48	1.48	-
	600	MBh	17.7	17.9	18.4	-	17.5	17.8	18.3	-	17.1	17.3	17.8	-	16.3	16.5	17.0	-	15.3	15.6	16.1	-	14.4	14.7	15.2	-
		S/T	0.69	0.61	0.47	-	0.69	0.62	0.48	-	1.00	0.64	0.50	-	1.00	0.66	0.52	-	1.00	0.68	0.54	-	1.00	1.00	0.60	-
		ΔT	19	17	14	-	19	17	14	-	19	17	14	-	19	17	14	-	19	17	13	-	20	18	15	-
		Lo PR	131	133	136	-	139	141	144	-	146	147	151	-	152	153	157	-	157	159	162	-	165	166	169	-
		Hi PR	233	234	235	-	269	270	272	-	307	308	310	-	348	349	351	-	393	394	395	-	440	441	442	-
		Amps	3.1	3.1	3.0	-	3.5	3.5	3.5	-	3.9	3.9	3.9	-	4.4	4.4	4.4	-	5.0	5.0	5.0	-	5.7	5.7	5.7	-
		KW	0.89	0.89	0.88	-	0.98	0.98	0.98	-	1.09	1.09	1.09	-	1.21	1.21	1.20	-	1.34	1.34	1.33	-	1.49	1.49	1.49	-
	660	MBh	17.9	18.1	18.7	-	17.7	18.0	18.5	-	17.3	17.5	18.0	-	16.5	16.7	17.3	-	15.5	15.8	16.3	-	14.7	14.9	15.4	-
		S/T	0.72	0.64	0.50	-	0.72	0.65	0.51	-	1.00	0.67	0.53	-	1.00	0.69	0.55	-	1.00	0.71	0.57	-	1.00	1.00	0.63	-
		ΔT	18	16	13	-	18	16	13	-	19	17	13	-	18	16	13	-	18	16	13	-	19	17	14	-
		Lo PR	133	134	138	-	141	142	146	-	148	149	152	-	153	155	158	-	159	161	164	-	166	168	171	-
		Hi PR	234	235	237	-	271	272	273	-	309	310	311	-	350	351	352	-	394	395	397	-	441	442	444	-
		Amps	3.1	3.1	3.1	-	3.5	3.5	3.5	-	4.0	4.0	3.9	-	4.5	4.5	4.5	-	5.0	5.0	5.0	-	5.7	5.7	5.7	-
		KW	0.89	0.89	0.89	-	0.99	0.99	0.98	-	1.09	1.09	1.09	-	1.21	1.21	1.21	-	1.34	1.34	1.34	-	1.49	1.49	1.49	-
75	540	MBh	17.5	17.7	18.3	19.1	17.3	17.6	18.1	18.9	16.9	17.1	17.7	18.5	16.1	16.3	16.9	17.7	15.1	15.4	15.9	16.7	14.3	14.5	15.0	15.8
		S/T	0.77	0.70	0.56	0.41	1.00	0.70	0.56	0.41	1.00	0.73	0.59	0.44	1.00	0.75	0.61	0.46	1.00	1.00	0.63	0.48	1.00	1.00	0.68	0.54
		ΔT	24	22	19	15	24	22	19	15	24	22	19	15	24	22	19	15	24	22	18	15	25	23	20	16
		Lo PR	130	131	134	140	137	139	142	148	144	146	149	155	150	152	155	161	156	157	161	166	163	165	168	173
		Hi PR	231	232	234	238	268	269	270	274	306	307	308	312	347	348	350	354	391	392	394	398	438	439	441	445
		Amps	3.0	3.0	3.0	3.1	3.5	3.4	3.4	3.5	3.9	3.9	3.9	3.9	4.4	4.4	4.4	4.4	5.0	5.0	5.0	5.0	5.7	5.7	5.6	5.7
		KW	0.88	0.88	0.88	0.89	0.98	0.98	0.98	0.98	1.09	1.08	1.08	1.09	1.20	1.20	1.20	1.21	1.33	1.33	1.33	1.34	1.48	1.48	1.48	1.49
	600	MBh	17.7	17.9	18.5	19.2	17.5	17.8	18.3	19.1	17.1	17.3	17.8	18.6	16.3	16.5	17.1	17.9	15.3	15.6	16.1	16.9	14.5	14.7	15.2	16.0
		S/T	0.82	0.74	0.60	0.46	1.00	0.75	0.61	0.46	1.00	0.78	0.64	0.49	1.00	0.80	0.66	0.51	1.00	1.00	0.68	0.53	1.00	1.00	0.73	0.58
		ΔT	23	21	18	14	23	21	18	14	23	22	18	14	23	21	18	14	23	21	18	14	24	22	19	15
		Lo PR	131	133	136	142	139	141	144	149	146	147	151	156	152	153	157	162	157	159	162	168	165	166	169	175
		Hi PR	233	234	235	240	269	270	272	276	307	308	310	314	348	349	351	355	393	394	395	399	440	441	443	447
		Amps	3.1	3.0	3.0	3.1	3.5	3.5	3.5	3.5	3.9	3.9	3.9	4.0	4.4	4.4	4.4	4.5	5.0	5.0	5.0	5.0	5.7	5.7	5.7	5.7
		KW	0.89	0.88	0.88	0.89	0.98	0.98	0.98	0.99	1.09	1.09	1.09	1.09	1.21	1.20	1.20	1.21	1.34	1.33	1.33	1.34	1.49	1.49	1.49	1.49
	660	MBh	17.9	18.1	18.7	19.5	17.7	18.0	18.5	19.3	17.3	17.5	18.1	18.9	16.5	16.8	17.3	18.1	15.5	15.8	16.3	17.1	14.7	14.9	15.4	16.2
		S/T	0.85	0.77	0.63	0.49	1.00	0.78	0.64	0.49	1.00	0.81	0.67	0.52	1.00	1.00	0.69	0.54	1.00	1.00	0.71	0.56	1.00	1.00	0.76	0.61
		ΔT	22	21	17	13	22	21	17	13	23	21	17	14	22	21	17	13	22	20	17	13	23	21	18	14
		Lo PR	133	134	138	143	141	142	146	151	148	149	152	158	153	155	158	164	159	161	164	169	166	168	171	177
		Hi PR	234	235	237	241	271	272	273	277	309	310	312	316	350	351	353	357	394	395	397	401	442	443	444	448
		Amps	3.1	3.1	3.1	3.1	3.5	3.5	3.5	3.5	4.0	3.9	3.9	4.0	4.5	4.5	4.4	4.5	5.0	5.0	5.0	5.0	5.7	5.7	5.7	5.7
		KW	0.89	0.89	0.89	0.89	0.99	0.98	0.98	0.99	1.09	1.09	1.09	1.10	1.21	1.21	1.21	1.21	1.34	1.34	1.34	1.34	1.49	1.49	1.49	1.50

IDB = Entering Indoor Dry Bulb Temperature

Shaded area reflects ACCA (TVA) conditions

Amps = outdoor unit amps (comp.+fan)

High and low pressures are measured at the liquid and suction service valves.

kW = Total system power

Expanded Cooling Data — DX16TC0241C*+CA*F3137*6A*+EEP+TXV - Low Stage

			Outdoor Ambient Temperature																							
			65ºF				75ºF				85ºF				95ºF				105ºF				115ºF			
			Entering Indoor Wet Bulb Temperature																							
IDB	Airflow		59	63	67	71	59	63	67	71	59	63	67	71	59	63	67	71	59	63	67	71	59	63	67	71
80	540	MBh	17.6	17.8	18.4	19.2	17.4	17.7	18.2	19.0	17.0	17.2	17.7	18.5	16.2	16.4	17.0	17.8	15.2	15.5	16.0	16.8	14.4	14.6	15.1	15.9
		S/T	1.00	0.83	0.69	0.54	1.00	0.83	0.69	0.54	1.00	1.00	0.72	0.57	1.00	1.00	0.74	0.59	1.00	1.00	0.76	0.61	1.00	1.00	1.00	0.67
		ΔT	28	26	23	19	28	26	23	19	29	27	23	20	28	26	23	19	28	26	23	19	29	27	24	20
		Lo PR	130	132	135	141	138	140	143	148	145	147	150	155	151	152	156	161	156	158	161	167	164	165	168	174
		Hi PR	232	233	234	238	268	269	271	275	306	307	309	313	347	348	350	354	392	393	394	398	439	440	441	445
		Amps	3.0	3.0	3.0	3.1	3.5	3.5	3.4	3.5	3.9	3.9	3.9	3.9	4.4	4.4	4.4	4.5	5.0	5.0	5.0	5.0	5.7	5.7	5.6	5.7
		KW	0.88	0.88	0.88	0.89	0.98	0.98	0.98	0.98	1.09	1.09	1.08	1.09	1.20	1.20	1.20	1.21	1.33	1.33	1.33	1.34	1.48	1.48	1.48	1.49
	600	MBh	17.8	18.0	18.5	19.3	17.6	17.9	18.4	19.2	17.2	17.4	17.9	18.7	16.4	16.6	**17.1**	17.9	15.4	15.7	16.2	17.0	14.5	14.8	15.3	16.1
		S/T	1.00	0.87	0.73	0.58	1.00	0.88	0.74	0.59	1.00	1.00	0.76	0.62	1.00	1.00	**0.78**	0.64	1.00	1.00	0.81	0.66	1.00	1.00	1.00	0.71
		ΔT	27	26	22	18	27	25	22	18	28	26	22	19	27	25	**22**	18	27	25	22	18	28	26	23	19
		Lo PR	132	133	137	142	140	141	144	150	146	148	151	157	152	154	**157**	163	158	160	163	168	165	167	170	176
		Hi PR	233	234	236	240	270	271	272	276	308	309	310	314	349	350	**352**	356	393	394	396	400	440	441	443	447
		Amps	3.1	3.1	3.0	3.1	3.5	3.5	3.5	3.5	3.9	3.9	3.9	4.0	4.4	4.4	**4.4**	4.5	5.0	5.0	5.0	5.0	5.7	5.7	5.7	5.7
		KW	0.89	0.89	0.88	0.89	0.98	0.98	0.98	0.99	1.09	1.09	1.09	1.09	1.21	1.21	**1.20**	1.21	1.34	1.34	1.33	1.34	1.49	1.49	1.49	1.49
	660	MBh	18.0	18.2	18.8	19.6	17.8	18.1	18.6	19.4	17.4	17.6	18.1	18.9	16.6	16.8	17.4	18.2	15.6	15.9	16.4	17.2	14.8	15.0	15.5	16.3
		S/T	1.00	0.90	0.76	0.61	1.00	0.91	0.77	0.62	1.00	1.00	0.79	0.65	1.00	1.00	0.81	0.67	1.00	1.00	0.84	0.69	1.00	1.00	1.00	0.74
		ΔT	27	25	21	18	27	25	21	18	27	25	21	18	27	25	21	18	26	24	21	17	27	26	22	18
		Lo PR	133	135	138	144	141	143	146	152	148	150	153	158	154	156	159	164	160	161	165	170	167	168	172	177
		Hi PR	235	236	237	241	271	272	274	278	309	310	312	316	350	351	353	357	395	396	397	401	442	443	445	449
		Amps	3.1	3.1	3.1	3.1	3.5	3.5	3.5	3.5	4.0	4.0	3.9	4.0	4.5	4.5	4.5	4.5	5.0	5.0	5.0	5.0	5.7	5.7	5.7	5.7
		KW	0.89	0.89	0.89	0.89	0.99	0.98	0.98	0.99	1.09	1.09	1.09	1.10	1.21	1.21	1.21	1.21	1.34	1.34	1.34	1.34	1.49	1.49	1.49	1.50
85	540	MBh	17.9	18.1	18.7	19.4	17.7	18.0	18.5	19.3	17.3	17.5	18.0	18.8	16.5	16.7	17.3	18.1	15.5	15.8	16.3	17.1	14.7	14.9	15.4	16.2
		S/T	1.00	0.93	0.79	0.64	1.00	1.00	0.80	0.65	1.00	1.00	0.82	0.67	1.00	1.00	0.84	0.69	1.00	1.00	1.00	0.72	1.00	1.00	1.00	0.77
		ΔT	32	30	27	23	32	30	27	23	32	30	27	23	32	30	27	23	32	30	26	23	33	31	27	24
		Lo PR	132	134	137	142	140	142	145	150	147	148	152	157	153	154	158	163	158	160	163	169	166	167	170	176
		Hi PR	233	234	235	239	269	270	272	276	307	308	310	314	348	349	351	355	393	394	395	399	440	441	443	447
		Amps	3.0	3.0	3.0	3.1	3.5	3.5	3.5	3.5	3.9	3.9	3.9	4.0	4.4	4.4	4.4	4.5	5.0	5.0	5.0	5.0	5.7	5.7	5.7	5.7
		KW	0.88	0.88	0.88	0.89	0.98	0.98	0.98	0.99	1.09	1.09	1.09	1.09	1.20	1.20	1.20	1.21	1.33	1.33	1.33	1.34	1.49	1.49	1.48	1.49
	600	MBh	18.1	18.3	18.8	19.6	17.9	18.2	18.7	19.5	17.5	17.7	18.2	19.0	16.7	16.9	17.4	18.2	15.7	16.0	16.5	17.3	14.8	15.1	15.6	16.4
		S/T	1.00	0.98	0.84	0.69	1.00	1.00	0.84	0.70	1.00	1.00	0.87	0.72	1.00	1.00	1.00	0.74	1.00	1.00	1.00	0.76	1.00	1.00	1.00	0.82
		ΔT	31	29	26	22	31	29	26	22	31	29	26	22	31	29	26	22	31	29	25	22	32	30	27	23
		Lo PR	134	135	139	144	141	143	146	152	148	150	153	159	154	156	159	165	160	162	165	170	167	169	172	177
		Hi PR	234	235	237	241	271	272	273	277	309	310	312	316	350	351	353	357	394	395	397	401	441	442	444	448
		Amps	3.1	3.1	3.1	3.1	3.5	3.5	3.5	3.5	3.9	3.9	3.9	4.0	4.5	4.5	4.4	4.5	5.0	5.0	5.0	5.0	5.7	5.7	5.7	5.7
		KW	0.89	0.89	0.89	0.89	0.98	0.98	0.98	0.99	1.09	1.09	1.09	1.10	1.21	1.21	1.21	1.21	1.34	1.34	1.34	1.34	1.49	1.49	1.49	1.50
	660	MBh	18.3	18.5	19.1	19.8	18.1	18.4	18.9	19.7	17.7	17.9	18.4	19.2	16.9	17.1	17.7	18.5	15.9	16.2	16.7	17.5	15.1	15.3	15.8	16.6
		S/T	1.00	1.00	0.87	0.72	1.00	1.00	0.87	0.73	1.00	1.00	0.90	0.75	1.00	1.00	1.00	0.77	1.00	1.00	1.00	0.79	1.00	1.00	1.00	0.85
		ΔT	30	28	25	21	30	28	25	21	31	29	25	22	30	28	25	21	30	28	25	21	31	29	26	22
		Lo PR	135	137	140	146	143	145	148	154	150	152	155	160	156	157	161	166	162	163	166	172	169	170	174	179
		Hi PR	236	237	239	243	272	273	275	279	310	311	313	317	351	352	354	358	396	397	398	402	443	444	446	450
		Amps	3.1	3.1	3.1	3.1	3.5	3.5	3.5	3.5	4.0	4.0	4.0	4.0	4.5	4.5	4.5	4.5	5.0	5.0	5.0	5.1	5.7	5.7	5.7	5.7
		KW	0.89	0.89	0.89	0.90	0.99	0.99	0.99	0.99	1.10	1.09	1.09	1.10	1.21	1.21	1.21	1.22	1.34	1.34	1.34	1.35	1.49	1.49	1.49	1.50

IDB = Entering Indoor Dry Bulb Temperature

Shaded area reflects AHRI (TVA) conditions

Amps = outdoor unit amps (comp.+fan)

High and low pressures are measured at the liquid and suction service valves.

kW = Total system power

Expanded Cooling Data — DX16TC0361C*+CA*F3137*6A*+EEP+TXV - High Stage

			Outdoor Ambient Temperature																							
			65ºF				75ºF				85ºF				95ºF				105ºF				115ºF			
			Entering Indoor Wet Bulb Temperature																							
IDB	Airflow		59	63	67	71	59	63	67	71	59	63	67	71	59	63	67	71	59	63	67	71	59	63	67	71
70	1000	MBh	35.8	36.3	37.4	-	35.5	36.0	37.0	-	34.5	35.0	36.1	-	32.9	33.4	34.5	-	31.0	31.5	32.5	-	29.2	29.7	30.7	-
		S/T	0.61	0.53	0.40	-	0.61	0.54	0.40	-	0.64	0.56	0.43	-	0.66	0.58	0.45	-	1.00	0.60	0.47	-	1.00	0.65	0.52	-
		ΔT	20	18	15	-	20	18	15	-	21	19	15	-	20	18	15	-	20	18	15	-	21	19	16	-
		Lo PR	122	123	127	-	129	131	134	-	136	137	140	-	141	143	146	-	147	148	151	-	154	155	158	-
		Hi PR	245	246	247	-	283	284	286	-	323	325	326	-	367	368	370	-	414	415	417	-	464	465	467	-
		Amps	7.2	7.1	7.1	-	8.2	8.1	8.1	-	9.3	9.3	9.2	-	10.5	10.5	10.5	-	11.8	11.8	11.8	-	13.4	13.4	13.4	-
		KW	2.06	2.06	2.05	-	2.29	2.29	2.28	-	2.54	2.54	2.54	-	2.82	2.82	2.82	-	3.13	3.13	3.13	-	3.50	3.50	3.49	-
	1130	MBh	36.2	36.7	37.8	-	35.9	36.4	37.5	-	35.0	35.5	36.5	-	33.4	33.9	34.9	-	31.4	31.9	33.0	-	29.6	30.1	31.2	-
		S/T	0.66	0.58	0.45	-	0.66	0.59	0.46	-	0.69	0.61	0.48	-	0.71	0.63	0.50	-	1.00	0.66	0.52	-	1.00	0.71	0.57	-
		ΔT	19	17	14	-	19	17	14	-	20	18	14	-	19	17	14	-	19	17	14	-	20	18	15	-
		Lo PR	124	125	128	-	131	133	136	-	138	139	142	-	143	145	148	-	148	150	153	-	155	157	160	-
		Hi PR	246	247	249	-	285	286	288	-	325	326	328	-	369	370	372	-	416	417	419	-	466	467	469	-
		Amps	7.2	7.2	7.2	-	8.2	8.2	8.2	-	9.3	9.3	9.3	-	10.5	10.5	10.5	-	11.9	11.9	11.9	-	13.5	13.5	13.4	-
		KW	2.07	2.07	2.06	-	2.30	2.30	2.29	-	2.56	2.55	2.55	-	2.83	2.83	2.83	-	3.14	3.14	3.14	-	3.51	3.51	3.50	-
	1250	MBh	36.7	37.2	38.3	-	36.4	36.9	37.9	-	35.4	35.9	37.0	-	33.8	34.3	35.4	-	31.9	32.4	33.4	-	30.1	30.6	31.7	-
		S/T	0.69	0.61	0.48	-	0.69	0.62	0.49	-	0.72	0.64	0.51	-	1.00	0.66	0.53	-	1.00	0.69	0.55	-	1.00	0.74	0.60	-
		ΔT	19	17	13	-	18	17	13	-	19	17	13	-	18	17	13	-	18	16	13	-	19	17	14	-
		Lo PR	125	127	130	-	133	134	137	-	139	141	144	-	145	146	149	-	150	152	155	-	157	158	161	-
		Hi PR	248	249	251	-	287	288	289	-	327	328	330	-	371	372	373	-	417	419	420	-	468	469	470	-
		Amps	7.2	7.2	7.2	-	8.2	8.2	8.2	-	9.4	9.3	9.3	-	10.6	10.6	10.5	-	11.9	11.9	11.9	-	13.5	13.5	13.5	-
		KW	2.08	2.08	2.07	-	2.31	2.31	2.30	-	2.56	2.56	2.56	-	2.84	2.84	2.84	-	3.15	3.15	3.15	-	3.52	3.51	3.51	-
75	1000	MBh	35.8	36.3	37.4	39.0	35.5	36.0	37.1	38.7	34.6	35.1	36.1	37.8	32.9	33.5	34.5	36.1	31.0	31.5	32.6	34.2	29.2	29.7	30.8	32.4
		S/T	0.73	0.66	0.52	0.38	0.74	0.66	0.53	0.39	1.00	0.69	0.55	0.41	1.00	0.71	0.57	0.43	1.00	0.73	0.60	0.45	1.00	1.00	0.65	0.51
		ΔT	25	23	19	15	24	23	19	15	25	23	19	16	24	23	19	15	24	22	19	15	25	24	20	16
		Lo PR	122	124	127	132	129	131	134	139	136	137	141	146	141	143	146	151	147	148	151	157	154	155	158	163
		Hi PR	245	246	248	252	283	284	286	290	324	325	326	331	367	368	370	374	414	415	417	421	464	465	467	471
		Amps	7.1	7.1	7.1	7.2	8.1	8.1	8.1	8.2	9.3	9.3	9.2	9.3	10.5	10.5	10.4	10.5	11.8	11.8	11.8	11.9	13.4	13.4	13.4	13.5
		KW	2.06	2.05	2.05	2.07	2.29	2.28	2.28	2.30	2.54	2.54	2.54	2.55	2.82	2.82	2.82	2.83	3.13	3.13	3.13	3.14	3.50	3.49	3.49	3.51
	1130	MBh	36.2	36.7	37.8	39.4	35.9	36.4	37.5	39.1	35.0	35.5	36.6	38.2	33.4	33.9	35.0	36.6	31.4	31.9	33.0	34.6	29.6	30.1	31.2	32.8
		S/T	0.79	0.71	0.58	0.44	0.79	0.72	0.58	0.44	1.00	0.74	0.61	0.47	1.00	0.76	0.63	0.49	1.00	0.78	0.65	0.51	1.00	1.00	0.70	0.56
		ΔT	24	22	18	14	23	22	18	14	24	22	18	15	23	22	18	14	23	21	18	14	24	22	19	15
		Lo PR	124	125	128	133	131	133	136	141	138	139	142	147	143	145	148	153	148	150	153	158	155	157	160	165
		Hi PR	247	248	249	254	285	286	288	292	326	327	328	333	369	370	372	376	416	417	419	423	466	467	469	473
		Amps	7.2	7.2	7.2	7.2	8.2	8.2	8.2	8.2	9.3	9.3	9.3	9.4	10.5	10.5	10.5	10.6	11.9	11.9	11.8	11.9	13.5	13.4	13.4	13.5
		KW	2.07	2.06	2.06	2.08	2.30	2.30	2.29	2.31	2.55	2.55	2.55	2.57	2.83	2.83	2.83	2.84	3.14	3.14	3.14	3.15	3.51	3.50	3.50	3.52
	1250	MBh	36.7	37.2	38.3	39.9	36.4	36.9	38.0	39.6	35.5	36.0	37.0	38.7	33.9	34.4	35.4	37.1	31.9	32.4	33.5	35.1	30.1	30.6	31.7	33.3
		S/T	0.82	0.74	0.61	0.47	0.82	0.75	0.61	0.47	1.00	0.77	0.64	0.50	1.00	0.79	0.66	0.52	1.00	0.81	0.68	0.54	1.00	1.00	0.73	0.59
		ΔT	23	21	17	14	23	21	17	14	23	21	17	14	23	21	17	14	22	20	17	13	24	22	18	14
		Lo PR	125	127	130	135	133	134	137	143	139	141	144	149	145	146	149	155	150	152	155	160	157	158	161	167
		Hi PR	248	249	251	255	287	288	290	294	327	328	330	334	371	372	374	378	418	419	420	425	468	469	471	475
		Amps	7.2	7.2	7.2	7.3	8.2	8.2	8.2	8.3	9.3	9.3	9.3	9.4	10.6	10.5	10.5	10.6	11.9	11.9	11.9	12.0	13.5	13.5	13.5	13.5
		KW	2.08	2.07	2.07	2.09	2.31	2.30	2.30	2.32	2.56	2.56	2.56	2.57	2.84	2.84	2.83	2.85	3.15	3.15	3.15	3.16	3.52	3.51	3.51	3.53

IDB = Entering Indoor Dry Bulb Temperature

Shaded area reflects ACCA (TVA) conditions

Amps = outdoor unit amps (comp.+fan)

High and low pressures are measured at the liquid and suction service valves.

kW = Total system power

Expanded Cooling Data — DX16TC0361C*+CA*F3137*6A*+EEP+TXV - High Stage

			Outdoor Ambient Temperature																							
			65ºF				75ºF				85ºF				95ºF				105ºF				115ºF			
			Entering Indoor Wet Bulb Temperature																							
IDB	Airflow		59	63	67	71	59	63	67	71	59	63	67	71	59	63	67	71	59	63	67	71	59	63	67	71
80	1000	MBh	36.0	36.5	37.6	39.2	35.7	36.2	37.2	38.9	34.7	35.2	36.3	37.9	33.1	33.6	34.7	36.3	31.2	31.7	32.7	34.4	29.4	29.9	30.9	32.6
		S/T	1.00	0.78	0.65	0.51	1.00	0.79	0.65	0.51	1.00	0.81	0.68	0.54	1.00	0.83	0.70	0.56	1.00	1.00	0.72	0.58	1.00	1.00	0.77	0.63
		ΔT	29	27	23	20	29	27	23	20	29	27	24	20	29	27	23	20	28	27	23	19	30	28	24	21
		Lo PR	123	124	127	132	130	131	135	140	136	138	141	146	142	143	147	152	147	149	152	157	154	156	159	164
		Hi PR	245	246	248	252	284	285	287	291	324	325	327	331	368	369	370	375	415	416	417	422	465	466	467	472
		Amps	7.2	7.1	7.1	7.2	8.2	8.1	8.1	8.2	9.3	9.3	9.2	9.3	10.5	10.5	10.5	10.5	11.8	11.8	11.8	11.9	13.4	13.4	13.4	13.5
		KW	2.06	2.06	2.05	2.07	2.29	2.29	2.28	2.30	2.54	2.54	2.54	2.56	2.82	2.82	2.82	2.83	3.13	3.13	3.13	3.14	3.50	3.50	3.49	3.51
	1130	MBh	36.4	36.9	38.0	39.6	36.1	36.6	37.7	39.3	35.2	35.7	36.7	38.4	33.6	34.1	**35.1**	36.8	31.6	32.1	33.2	34.8	29.8	30.3	31.4	33.0
		S/T	1.00	0.84	0.70	0.56	1.00	0.84	0.71	0.57	1.00	0.87	0.73	0.59	1.00	0.89	**0.75**	0.61	1.00	1.00	0.77	0.63	1.00	1.00	0.82	0.68
		ΔT	28	26	22	19	28	26	22	19	28	26	22	19	28	26	**22**	19	27	25	22	18	29	27	23	19
		Lo PR	124	126	129	134	132	133	136	141	138	140	143	148	144	145	**148**	153	149	150	154	159	156	157	160	166
		Hi PR	247	248	250	254	286	287	288	293	326	327	329	333	370	371	**372**	377	416	417	419	423	466	468	469	474
		Amps	7.2	7.2	7.2	7.2	8.2	8.2	8.2	8.3	9.3	9.3	9.3	9.4	10.5	10.5	**10.5**	10.6	11.9	11.9	11.8	11.9	13.5	13.5	13.4	13.5
		KW	2.07	2.07	2.06	2.08	2.30	2.30	2.29	2.31	2.55	2.55	2.55	2.57	2.83	2.83	**2.83**	2.84	3.14	3.14	3.14	3.16	3.51	3.51	3.50	3.52
	1250	MBh	36.9	37.4	38.5	40.1	36.6	37.1	38.2	39.8	35.6	36.1	37.2	38.8	34.0	34.5	35.6	37.2	32.1	32.6	33.6	35.3	30.3	30.8	31.9	33.5
		S/T	1.00	0.87	0.73	0.59	1.00	0.87	0.74	0.60	1.00	0.90	0.76	0.62	1.00	1.00	0.78	0.64	1.00	1.00	0.80	0.66	1.00	1.00	0.85	0.71
		ΔT	27	25	21	18	27	25	21	18	27	25	22	18	27	25	21	18	27	25	21	17	28	26	22	19
		Lo PR	126	127	130	136	133	135	138	143	140	141	144	150	145	147	150	155	151	152	155	160	157	159	162	167
		Hi PR	249	250	252	256	287	288	290	294	328	329	331	335	371	372	374	378	418	419	421	425	468	469	471	475
		Amps	7.2	7.2	7.2	7.3	8.2	8.2	8.2	8.3	9.4	9.3	9.3	9.4	10.6	10.6	10.5	10.6	11.9	11.9	11.9	12.0	13.5	13.5	13.5	13.5
		KW	2.08	2.07	2.07	2.09	2.31	2.30	2.30	2.32	2.56	2.56	2.56	2.58	2.84	2.84	2.84	2.85	3.15	3.15	3.15	3.16	3.52	3.51	3.51	3.53
85	1000	MBh	36.6	37.1	38.2	39.8	36.3	36.8	37.8	39.5	35.3	35.8	36.9	38.5	33.7	34.2	35.3	36.9	31.8	32.3	33.3	35.0	30.0	30.5	31.6	33.2
		S/T	1.00	0.88	0.75	0.61	1.00	0.89	0.75	0.61	1.00	1.00	0.78	0.64	1.00	1.00	0.80	0.66	1.00	1.00	0.82	0.68	1.00	1.00	1.00	0.73
		ΔT	32	31	27	23	32	31	27	23	33	31	27	24	32	30	27	23	32	30	27	23	33	31	28	24
		Lo PR	124	126	129	134	132	133	136	142	138	140	143	148	144	145	148	154	149	151	154	159	156	157	161	166
		Hi PR	246	247	249	253	285	286	288	292	325	326	328	332	369	370	372	376	416	417	418	423	466	467	469	473
		Amps	7.2	7.2	7.1	7.2	8.2	8.2	8.1	8.2	9.3	9.3	9.3	9.3	10.5	10.5	10.5	10.5	11.8	11.8	11.8	11.9	13.4	13.4	13.4	13.5
		KW	2.06	2.06	2.06	2.07	2.29	2.29	2.29	2.30	2.55	2.55	2.54	2.56	2.83	2.82	2.82	2.84	3.14	3.14	3.13	3.15	3.50	3.50	3.50	3.51
	1130	MBh	37.0	37.5	38.6	40.2	36.7	37.2	38.3	39.9	35.8	36.3	37.3	39.0	34.2	34.7	35.7	37.4	32.2	32.7	33.8	35.4	30.4	30.9	32.0	33.6
		S/T	1.00	0.94	0.80	0.66	1.00	0.94	0.81	0.67	1.00	1.00	0.83	0.69	1.00	1.00	0.85	0.71	1.00	1.00	0.87	0.73	1.00	1.00	1.00	0.78
		ΔT	31	30	26	22	31	29	26	22	32	30	26	23	31	29	26	22	31	29	26	22	32	30	27	23
		Lo PR	126	128	131	136	133	135	138	143	140	141	145	150	145	147	150	155	151	152	155	161	158	159	162	167
		Hi PR	248	249	251	255	287	288	290	294	327	328	330	334	371	372	373	378	418	419	420	425	468	469	470	475
		Amps	7.2	7.2	7.2	7.3	8.2	8.2	8.2	8.3	9.3	9.3	9.3	9.4	10.5	10.5	10.5	10.6	11.9	11.9	11.9	11.9	13.5	13.5	13.5	13.5
		KW	2.07	2.07	2.07	2.08	2.30	2.30	2.30	2.31	2.56	2.56	2.55	2.57	2.84	2.84	2.83	2.85	3.15	3.15	3.14	3.16	3.51	3.51	3.51	3.52
	1250	MBh	37.5	38.0	39.1	40.7	37.2	37.7	38.8	40.4	36.2	36.8	37.8	39.5	34.6	35.1	36.2	37.8	32.7	33.2	34.3	35.9	30.9	31.4	32.5	34.1
		S/T	1.00	0.97	0.83	0.69	1.00	1.00	0.84	0.70	1.00	1.00	0.86	0.72	1.00	1.00	0.88	0.74	1.00	1.00	0.90	0.76	1.00	1.00	1.00	0.81
		ΔT	31	29	25	21	31	29	25	21	31	29	25	22	31	29	25	21	30	28	25	21	31	30	26	22
		Lo PR	128	129	132	137	135	137	140	145	142	143	146	151	147	149	152	157	152	154	157	162	159	161	164	169
		Hi PR	250	251	253	257	289	290	291	296	329	330	332	336	372	373	375	379	419	420	422	426	469	470	472	476
		Amps	7.3	7.2	7.2	7.3	8.3	8.2	8.2	8.3	9.4	9.4	9.3	9.4	10.6	10.6	10.6	10.6	11.9	11.9	11.9	12.0	13.5	13.5	13.5	13.6
		KW	2.08	2.08	2.08	2.09	2.31	2.31	2.31	2.32	2.57	2.57	2.56	2.58	2.85	2.84	2.84	2.86	3.16	3.15	3.15	3.17	3.52	3.52	3.52	3.53

IDB = Entering Indoor Dry Bulb Temperature

Shaded area reflects AHRI (TVA) conditions

Amps = outdoor unit amps (comp.+fan)

High and low pressures are measured at the liquid and suction service valves.

kW = Total system power

			Outdoor Ambient Temperature																							
			65ºF				75ºF				85ºF				95ºF				105ºF				115ºF			
			Entering Indoor Wet Bulb Temperature																							
IDB	Airflow		59	63	67	71	59	63	67	71	59	63	67	71	59	63	67	71	59	63	67	71	59	63	67	71
70	700	MBh	25.7	26.1	26.8	-	25.5	25.8	26.6	-	24.8	25.2	25.9	-	23.6	24.0	24.8	-	22.2	22.6	23.4	-	20.9	21.3	22.1	-
		S/T	0.62	0.54	0.40	-	0.62	0.54	0.41	-	0.65	0.57	0.43	-	1.00	0.59	0.45	-	1.00	0.61	0.47	-	1.00	0.66	0.53	-
		ΔT	20	18	15	-	20	18	14	-	20	18	15	-	20	18	14	-	19	18	14	-	21	19	15	-
		Lo PR	125	127	130	-	133	134	138	-	140	141	144	-	145	147	150	-	151	152	155	-	158	159	162	-
		Hi PR	234	235	236	-	270	271	273	-	309	310	312	-	351	352	353	-	395	397	398	-	443	444	446	-
		Amps	4.5	4.5	4.5	-	5.1	5.1	5.1	-	5.8	5.8	5.8	-	6.6	6.6	6.6	-	7.4	7.4	7.4	-	8.4	8.4	8.4	-
		KW	1.29	1.29	1.29	-	1.44	1.44	1.43	-	1.60	1.60	1.60	-	1.77	1.77	1.77	-	1.97	1.97	1.97	-	2.20	2.20	2.20	-
	800	MBh	26.0	26.4	27.2	-	25.8	26.2	26.9	-	25.1	25.5	26.3	-	24.0	24.3	25.1	-	22.6	22.9	23.7	-	21.3	21.6	22.4	-
		S/T	0.68	0.60	0.46	-	0.68	0.61	0.47	-	0.71	0.63	0.49	-	1.00	0.65	0.51	-	1.00	0.67	0.54	-	1.00	0.73	0.59	-
		ΔT	19	17	13	-	19	17	13	-	19	17	14	-	19	17	13	-	18	17	13	-	19	18	14	-
		Lo PR	127	129	132	-	135	136	139	-	141	143	146	-	147	149	152	-	153	154	157	-	160	161	164	-
		Hi PR	236	237	238	-	272	273	275	-	311	312	314	-	353	354	355	-	397	398	400	-	445	446	448	-
		Amps	4.5	4.5	4.5	-	5.2	5.2	5.1	-	5.9	5.9	5.8	-	6.6	6.6	6.6	-	7.5	7.5	7.5	-	8.5	8.5	8.5	-
		KW	1.30	1.30	1.30	-	1.45	1.44	1.44	-	1.61	1.61	1.60	-	1.78	1.78	1.78	-	1.98	1.98	1.97	-	2.21	2.21	2.20	-
	900	MBh	26.4	26.8	27.6	-	26.2	26.6	27.3	-	25.5	25.9	26.7	-	24.4	24.8	25.5	-	23.0	23.3	24.1	-	21.7	22.1	22.8	-
		S/T	0.71	0.63	0.50	-	0.72	0.64	0.50	-	1.00	0.67	0.53	-	1.00	0.69	0.55	-	1.00	0.71	0.57	-	1.00	0.76	0.62	-
		ΔT	18	16	12	-	18	16	12	-	18	16	13	-	18	16	12	-	17	16	12	-	19	17	13	-
		Lo PR	129	131	134	-	137	138	141	-	143	145	148	-	149	151	154	-	155	156	159	-	162	163	166	-
		Hi PR	238	239	240	-	274	275	277	-	313	314	316	-	355	356	357	-	399	400	402	-	447	448	450	-
		Amps	4.6	4.6	4.5	-	5.2	5.2	5.2	-	5.9	5.9	5.9	-	6.6	6.6	6.6	-	7.5	7.5	7.5	-	8.5	8.5	8.5	-
		KW	1.31	1.31	1.30	-	1.45	1.45	1.45	-	1.61	1.61	1.61	-	1.79	1.79	1.78	-	1.98	1.98	1.98	-	2.21	2.21	2.21	-
75	700	MBh	25.7	26.1	26.9	28.0	25.5	25.9	26.6	27.8	24.8	25.2	25.9	27.1	23.7	24.0	24.8	26.0	22.3	22.6	23.4	24.6	21.0	21.3	22.1	23.3
		S/T	0.75	0.67	0.53	0.39	0.75	0.68	0.54	0.39	1.00	0.70	0.56	0.42	1.00	0.72	0.58	0.44	1.00	0.74	0.61	0.46	1.00	1.00	0.66	0.51
		ΔT	24	22	19	15	24	22	18	15	24	22	19	15	24	22	18	15	23	22	18	15	25	23	19	16
		Lo PR	125	127	130	135	133	134	138	143	140	141	144	150	145	147	150	155	151	152	155	161	158	159	162	168
		Hi PR	234	235	236	241	271	272	273	277	309	310	312	316	351	352	354	358	396	397	398	402	444	445	446	450
		Amps	4.5	4.5	4.5	4.5	5.1	5.1	5.1	5.2	5.8	5.8	5.8	5.9	6.6	6.6	6.6	6.6	7.4	7.4	7.4	7.5	8.4	8.4	8.4	8.5
		KW	1.29	1.29	1.29	1.30	1.44	1.44	1.43	1.44	1.60	1.60	1.60	1.61	1.77	1.77	1.77	1.78	1.97	1.97	1.97	1.98	2.20	2.20	2.19	2.21
	800	MBh	26.1	26.4	27.2	28.4	25.8	26.2	27.0	28.1	25.2	25.5	26.3	27.5	24.0	24.4	25.1	26.3	22.6	23.0	23.7	24.9	21.3	21.7	22.4	23.6
		S/T	0.81	0.73	0.59	0.45	1.00	0.74	0.60	0.45	1.00	0.76	0.62	0.48	1.00	0.78	0.64	0.50	1.00	0.80	0.67	0.52	1.00	1.00	0.72	0.57
		ΔT	23	21	17	14	23	21	17	14	23	21	18	14	23	21	17	14	22	21	17	14	24	22	18	15
		Lo PR	127	129	132	137	135	136	139	145	141	143	146	151	147	149	152	157	153	154	157	163	160	161	164	170
		Hi PR	236	237	238	243	273	274	275	279	311	312	314	318	353	354	356	360	398	399	400	404	446	447	448	452
		Amps	4.5	4.5	4.5	4.6	5.2	5.1	5.1	5.2	5.9	5.9	5.8	5.9	6.6	6.6	6.6	6.6	7.5	7.5	7.4	7.5	8.5	8.5	8.4	8.5
		KW	1.30	1.30	1.30	1.31	1.44	1.44	1.44	1.45	1.61	1.61	1.60	1.61	1.78	1.78	1.78	1.79	1.98	1.98	1.97	1.98	2.21	2.20	2.20	2.21
	900	MBh	26.5	26.8	27.6	28.8	26.2	26.6	27.4	28.5	25.6	25.9	26.7	27.9	24.4	24.8	25.5	26.7	23.0	23.4	24.1	25.3	21.7	22.1	22.8	24.0
		S/T	0.84	0.76	0.63	0.48	1.00	0.77	0.63	0.49	1.00	0.80	0.66	0.51	1.00	0.82	0.68	0.53	1.00	1.00	0.70	0.56	1.00	1.00	0.75	0.61
		ΔT	22	20	17	13	22	20	16	13	22	20	17	13	22	20	16	13	21	20	16	13	23	21	17	14
		Lo PR	129	131	134	139	137	138	142	147	143	145	148	154	149	151	154	159	155	156	159	165	162	163	166	172
		Hi PR	238	239	240	244	275	276	277	281	313	314	316	320	355	356	357	362	400	401	402	406	447	448	450	454
		Amps	4.6	4.5	4.5	4.6	5.2	5.2	5.2	5.2	5.9	5.9	5.9	5.9	6.6	6.6	6.6	6.7	7.5	7.5	7.5	7.5	8.5	8.5	8.5	8.5
		KW	1.31	1.31	1.30	1.31	1.45	1.45	1.45	1.46	1.61	1.61	1.61	1.62	1.79	1.79	1.78	1.79	1.98	1.98	1.98	1.99	2.21	2.21	2.21	2.22

IDB = Entering Indoor Dry Bulb Temperature

Shaded area reflects ACCA (TVA) conditions

Amps = outdoor unit amps (comp.+fan)

High and low pressures are measured at the liquid and suction service valves.

kW = Total system power

Expanded Cooling Data — DX16TC0361C*+CA*F3137*6A*+EEP+TXV - Low Stage

			Outdoor Ambient Temperature																							
			65ºF				75ºF				85ºF				95ºF				105ºF				115ºF			
			Entering Indoor Wet Bulb Temperature																							
IDB	Airflow		59	63	67	71	59	63	67	71	59	63	67	71	59	63	67	71	59	63	67	71	59	63	67	71
80	700	MBh	25.9	26.2	27.0	28.2	25.6	26.0	26.8	27.9	25.0	25.3	26.1	27.3	23.8	24.2	24.9	26.1	22.4	22.7	23.5	24.7	21.1	21.5	22.2	23.4
		S/T	1.00	0.80	0.66	0.51	1.00	0.80	0.67	0.52	1.00	0.83	0.69	0.55	1.00	1.00	0.71	0.57	1.00	1.00	0.73	0.59	1.00	1.00	0.79	0.64
		ΔT	28	26	23	19	28	26	23	19	28	26	23	19	28	26	23	19	28	26	22	19	29	27	23	20
		Lo PR	126	127	131	136	133	135	138	144	140	142	145	150	146	147	151	156	151	153	156	161	158	160	163	168
		Hi PR	234	235	237	241	271	272	274	278	310	311	312	316	351	352	354	358	396	397	399	403	444	445	447	451
		Amps	4.5	4.5	4.5	4.5	5.1	5.1	5.1	5.2	5.8	5.8	5.8	5.9	6.6	6.6	6.6	6.6	7.4	7.4	7.4	7.5	8.4	8.4	8.4	8.5
		KW	1.29	1.29	1.29	1.30	1.44	1.44	1.43	1.45	1.60	1.60	1.60	1.61	1.77	1.77	1.77	1.78	1.97	1.97	1.97	1.98	2.20	2.20	2.20	2.21
	800	MBh	26.2	26.6	27.3	28.5	26.0	26.3	27.1	28.3	25.3	25.7	26.4	27.6	24.1	24.5	**25.3**	26.4	22.7	23.1	23.9	25.0	21.4	21.8	22.6	23.7
		S/T	1.00	0.86	0.72	0.57	1.00	0.86	0.73	0.58	1.00	0.89	0.75	0.61	1.00	1.00	**0.77**	0.63	1.00	1.00	0.79	0.65	1.00	1.00	0.85	0.70
		ΔT	27	25	21	18	27	25	21	18	27	25	22	18	27	25	**21**	18	26	25	21	18	28	26	22	19
		Lo PR	128	129	132	138	135	137	140	145	142	144	147	152	148	149	**152**	158	153	155	158	163	160	162	165	170
		Hi PR	236	237	239	243	273	274	276	280	312	313	314	318	353	354	**356**	360	398	399	401	405	446	447	449	453
		Amps	4.5	4.5	4.5	4.6	5.2	5.2	5.1	5.2	5.9	5.9	5.8	5.9	6.6	6.6	**6.6**	6.7	7.5	7.5	7.5	7.5	8.5	8.5	8.4	8.5
		KW	1.30	1.30	1.30	1.31	1.45	1.44	1.44	1.45	1.61	1.61	1.60	1.61	1.78	1.78	**1.78**	1.79	1.98	1.98	1.97	1.98	2.21	2.21	2.20	2.21
	900	MBh	26.6	27.0	27.7	28.9	26.4	26.7	27.5	28.7	25.7	26.1	26.8	28.0	24.5	24.9	25.7	26.8	23.1	23.5	24.3	25.4	21.8	22.2	23.0	24.1
		S/T	1.00	0.89	0.75	0.61	1.00	0.90	0.76	0.62	1.00	1.00	0.79	0.64	1.00	1.00	0.81	0.66	1.00	1.00	0.83	0.68	1.00	1.00	0.88	0.74
		ΔT	26	24	21	17	26	24	21	17	26	24	21	17	26	24	20	17	25	24	20	17	27	25	21	18
		Lo PR	130	131	134	140	137	139	142	147	144	146	149	154	150	151	154	160	155	157	160	165	162	164	167	172
		Hi PR	238	239	241	245	275	276	278	282	314	315	316	320	355	356	358	362	400	401	403	407	448	449	451	455
		Amps	4.6	4.6	4.5	4.6	5.2	5.2	5.2	5.2	5.9	5.9	5.9	5.9	6.6	6.6	6.6	6.7	7.5	7.5	7.5	7.5	8.5	8.5	8.5	8.5
		KW	1.31	1.31	1.30	1.31	1.45	1.45	1.45	1.46	1.61	1.61	1.61	1.62	1.79	1.79	1.78	1.80	1.98	1.98	1.98	1.99	2.21	2.21	2.21	2.22
85	700	MBh	26.3	26.6	27.4	28.6	26.1	26.4	27.2	28.4	25.4	25.7	26.5	27.7	24.2	24.6	25.4	26.5	22.8	23.2	23.9	25.1	21.5	21.9	22.7	23.8
		S/T	1.00	0.90	0.76	0.62	1.00	1.00	0.77	0.62	1.00	1.00	0.79	0.65	1.00	1.00	0.81	0.67	1.00	1.00	0.84	0.69	1.00	1.00	1.00	0.74
		ΔT	31	30	26	23	31	30	26	23	32	30	26	23	31	30	26	23	31	29	26	22	32	30	27	23
		Lo PR	128	129	132	138	135	137	140	145	142	144	147	152	148	149	152	158	153	155	158	163	160	162	165	170
		Hi PR	235	236	238	242	272	273	275	279	311	312	313	318	352	353	355	359	397	398	400	404	445	446	448	452
		Amps	4.5	4.5	4.5	4.5	5.1	5.1	5.1	5.2	5.8	5.8	5.8	5.9	6.6	6.6	6.6	6.6	7.4	7.4	7.4	7.5	8.4	8.4	8.4	8.5
		KW	1.30	1.29	1.29	1.30	1.44	1.44	1.44	1.45	1.60	1.60	1.60	1.61	1.78	1.78	1.77	1.78	1.97	1.97	1.97	1.98	2.20	2.20	2.20	2.21
	800	MBh	26.6	27.0	27.8	28.9	26.4	26.8	27.5	28.7	25.7	26.1	26.9	28.0	24.6	24.9	25.7	26.9	23.2	23.5	24.3	25.5	21.9	22.2	23.0	24.2
		S/T	1.00	0.96	0.82	0.68	1.00	1.00	0.83	0.68	1.00	1.00	0.85	0.71	1.00	1.00	0.87	0.73	1.00	1.00	1.00	0.75	1.00	1.00	1.00	0.80
		ΔT	30	28	25	22	30	28	25	21	31	29	25	22	30	28	25	21	30	28	25	21	31	29	26	22
		Lo PR	130	131	134	140	137	139	142	147	144	145	149	154	149	151	154	160	155	157	160	165	162	164	167	172
		Hi PR	237	238	240	244	274	275	277	281	313	314	315	320	354	355	357	361	399	400	402	406	447	448	450	454
		Amps	4.5	4.5	4.5	4.6	5.2	5.2	5.2	5.2	5.9	5.9	5.9	5.9	6.6	6.6	6.6	6.7	7.5	7.5	7.5	7.5	8.5	8.5	8.5	8.5
		KW	1.30	1.30	1.30	1.31	1.45	1.45	1.44	1.46	1.61	1.61	1.61	1.62	1.78	1.78	1.78	1.79	1.98	1.98	1.98	1.99	2.21	2.21	2.21	2.22
	900	MBh	27.0	27.4	28.2	29.3	26.8	27.2	27.9	29.1	26.1	26.5	27.3	28.4	25.0	25.3	26.1	27.3	23.6	23.9	24.7	25.9	22.3	22.6	23.4	24.6
		S/T	1.00	1.00	0.86	0.71	1.00	1.00	0.86	0.72	1.00	1.00	0.89	0.74	1.00	1.00	0.91	0.76	1.00	1.00	1.00	0.79	1.00	1.00	1.00	0.84
		ΔT	29	28	24	21	29	28	24	21	30	28	24	21	29	27	24	21	29	27	24	20	30	28	25	21
		Lo PR	132	133	136	142	139	141	144	149	146	147	151	156	152	153	156	162	157	159	162	167	164	166	169	174
		Hi PR	239	240	242	246	276	277	279	283	315	316	317	321	356	357	359	363	401	402	404	408	449	450	452	456
		Amps	4.6	4.6	4.6	4.6	5.2	5.2	5.2	5.2	5.9	5.9	5.9	5.9	6.7	6.7	6.6	6.7	7.5	7.5	7.5	7.5	8.5	8.5	8.5	8.5
		KW	1.31	1.31	1.31	1.32	1.45	1.45	1.45	1.46	1.62	1.62	1.61	1.62	1.79	1.79	1.79	1.80	1.99	1.99	1.98	1.99	2.22	2.21	2.21	2.22

IDB = Entering Indoor Dry Bulb Temperature

Shaded area reflects AHRI (TVA) conditions

Amps = outdoor unit amps (comp.+fan)

High and low pressures are measured at the liquid and suction service valves.

kW = Total system power

Expanded Cooling Data — DX16TC0481C*+CA*F4961*6D*+EEP+TXV - High Stage

			Outdoor Ambient Temperature																							
			65ºF				75ºF				85ºF				95ºF				105ºF				115ºF			
			Entering Indoor Wet Bulb Temperature																							
IDB	Airflow		59	63	67	71	59	63	67	71	59	63	67	71	59	63	67	71	59	63	67	71	59	63	67	71
70	1260	MBh	49.5	50.2	51.7	-	49.0	49.7	51.2	-	47.7	48.4	49.9	-	45.5	46.2	47.7	-	42.8	43.5	45.0	-	40.3	41.0	42.5	-
		S/T	0.57	0.50	0.37	-	0.57	0.50	0.37	-	0.60	0.52	0.40	-	0.61	0.54	0.42	-	1.00	0.56	0.44	-	1.00	0.61	0.48	-
		ΔT	22	20	16	-	22	20	16	-	22	20	17	-	22	20	16	-	22	20	16	-	23	21	17	-
		Lo PR	120	121	124	-	127	129	132	-	133	135	138	-	139	140	143	-	144	146	149	-	151	152	155	-
		Hi PR	244	245	247	-	282	284	285	-	323	324	326	-	366	367	369	-	413	414	416	-	463	464	466	-
		Amps	9.7	9.6	9.6	-	11.1	11.1	11.0	-	12.6	12.6	12.6	-	14.3	14.3	14.3	-	16.3	16.2	16.2	-	18.5	18.5	18.5	-
		KW	2.73	2.73	2.72	-	3.06	3.05	3.05	-	3.42	3.42	3.41	-	3.81	3.81	3.80	-	4.25	4.25	4.24	-	4.76	4.76	4.76	-
	1450	MBh	50.2	50.9	52.3	-	49.7	50.4	51.9	-	48.4	49.1	50.6	-	46.2	46.9	48.4	-	43.5	44.2	45.7	-	41.0	41.7	43.2	-
		S/T	0.63	0.56	0.43	-	0.63	0.56	0.43	-	0.66	0.58	0.46	-	0.67	0.60	0.48	-	1.00	0.62	0.50	-	1.00	0.67	0.54	-
		ΔT	21	19	15	-	21	19	15	-	21	19	15	-	21	19	15	-	21	19	15	-	22	20	16	-
		Lo PR	122	123	126	-	129	130	133	-	135	137	140	-	141	142	145	-	146	147	151	-	153	154	157	-
		Hi PR	246	247	249	-	285	286	287	-	325	326	328	-	368	370	371	-	415	416	418	-	465	466	468	-
		Amps	9.7	9.7	9.7	-	11.1	11.1	11.1	-	12.7	12.7	12.7	-	14.4	14.4	14.4	-	16.3	16.3	16.3	-	18.6	18.6	18.5	-
		KW	2.75	2.75	2.74	-	3.07	3.07	3.07	-	3.44	3.43	3.43	-	3.83	3.83	3.82	-	4.27	4.26	4.26	-	4.78	4.78	4.77	-
	1650	MBh	51.0	51.7	53.2	-	50.6	51.3	52.8	-	49.3	50.0	51.5	-	47.1	47.8	49.2	-	44.4	45.1	46.5	-	41.9	42.6	44.0	-
		S/T	0.66	0.59	0.46	-	0.67	0.60	0.47	-	0.69	0.62	0.49	-	0.71	0.64	0.51	-	1.00	0.66	0.53	-	1.00	0.71	0.58	-
		ΔT	20	18	14	-	20	18	14	-	20	18	14	-	20	18	14	-	19	17	14	-	21	19	15	-
		Lo PR	124	125	128	-	131	133	136	-	137	139	142	-	143	144	147	-	148	150	153	-	155	156	159	-
		Hi PR	248	249	251	-	287	288	290	-	327	328	330	-	371	372	373	-	418	419	420	-	468	469	470	-
		Amps	9.8	9.8	9.8	-	11.2	11.2	11.2	-	12.8	12.8	12.8	-	14.5	14.5	14.5	-	16.4	16.4	16.4	-	18.6	18.6	18.6	-
		KW	2.76	2.76	2.76	-	3.09	3.09	3.08	-	3.45	3.45	3.44	-	3.84	3.84	3.84	-	4.28	4.28	4.27	-	4.80	4.79	4.79	-
75	1260	MBh	49.5	50.2	51.7	53.9	49.1	49.8	51.2	53.5	47.8	48.5	50.0	52.2	45.6	46.3	47.7	50.0	42.8	43.5	45.0	47.3	40.4	41.1	42.5	44.8
		S/T	0.69	0.62	0.49	0.35	0.69	0.62	0.50	0.36	1.00	0.65	0.52	0.38	1.00	0.66	0.54	0.40	1.00	0.69	0.56	0.42	1.00	0.73	0.61	0.47
		ΔT	27	25	21	17	27	25	21	17	27	25	21	17	27	25	21	17	26	24	21	17	28	26	22	18
		Lo PR	120	121	124	129	127	129	132	137	133	135	138	143	139	140	143	148	144	146	149	154	151	152	155	160
		Hi PR	244	245	247	251	283	284	285	290	323	324	326	330	367	368	369	374	413	414	416	420	463	464	466	470
		Amps	9.6	9.6	9.6	9.7	11.1	11.0	11.0	11.1	12.6	12.6	12.6	12.7	14.3	14.3	14.3	14.4	16.2	16.2	16.2	16.3	18.5	18.5	18.4	18.6
		KW	2.73	2.73	2.72	2.75	3.05	3.05	3.05	3.07	3.42	3.41	3.41	3.43	3.81	3.81	3.80	3.83	4.25	4.24	4.24	4.26	4.76	4.76	4.75	4.78
	1450	MBh	50.2	50.9	52.4	54.6	49.7	50.4	51.9	54.2	48.5	49.2	50.6	52.9	46.2	46.9	48.4	50.7	43.5	44.2	45.7	47.9	41.0	41.7	43.2	45.5
		S/T	0.75	0.68	0.55	0.41	0.75	0.68	0.56	0.42	1.00	0.71	0.58	0.44	1.00	0.72	0.60	0.46	1.00	0.75	0.62	0.48	1.00	0.79	0.67	0.53
		ΔT	25	23	20	16	25	23	20	16	26	24	20	16	25	23	19	16	25	23	19	15	26	24	21	17
		Lo PR	122	123	126	131	129	130	133	139	135	137	140	145	141	142	145	150	146	147	151	156	153	154	157	162
		Hi PR	246	247	249	253	285	286	288	292	325	326	328	332	369	370	371	376	416	417	418	423	466	467	468	473
		Amps	9.7	9.7	9.7	9.8	11.1	11.1	11.1	11.2	12.7	12.7	12.7	12.8	14.4	14.4	14.4	14.5	16.3	16.3	16.3	16.4	18.6	18.5	18.5	18.6
		KW	2.75	2.74	2.74	2.76	3.07	3.07	3.06	3.09	3.43	3.43	3.43	3.45	3.83	3.82	3.82	3.84	4.27	4.26	4.26	4.28	4.78	4.78	4.77	4.80
	1650	MBh	51.1	51.8	53.2	55.5	50.6	51.3	52.8	55.1	49.3	50.0	51.5	53.8	47.1	47.8	49.3	51.5	44.4	45.1	46.6	48.8	41.9	42.6	44.1	46.3
		S/T	0.78	0.71	0.58	0.45	0.79	0.72	0.59	0.45	1.00	0.74	0.61	0.48	1.00	0.76	0.63	0.50	1.00	0.78	0.65	0.52	1.00	1.00	0.70	0.57
		ΔT	24	22	18	14	24	22	18	14	25	22	19	15	24	22	18	14	24	22	18	14	25	23	19	15
		Lo PR	124	125	128	133	131	133	136	141	137	139	142	147	143	144	147	153	148	150	153	158	155	156	159	164
		Hi PR	249	250	251	256	287	288	290	294	327	329	330	334	371	372	374	378	418	419	421	425	468	469	471	475
		Amps	9.8	9.8	9.8	9.9	11.2	11.2	11.2	11.3	12.8	12.8	12.7	12.9	14.5	14.5	14.4	14.6	16.4	16.4	16.4	16.5	18.6	18.6	18.6	18.7
		KW	2.76	2.76	2.75	2.78	3.09	3.08	3.08	3.10	3.45	3.45	3.44	3.47	3.84	3.84	3.83	3.86	4.28	4.28	4.27	4.30	4.79	4.79	4.79	4.81

IDB = Entering Indoor Dry Bulb Temperature

Shaded area reflects ACCA (TVA) conditions

Amps = outdoor unit amps (comp.+fan)

High and low pressures are measured at the liquid and suction service valves.

kW = Total system power

Expanded Cooling Data — DX16TC0481C*+CA*F4961*6D*+EEP+TXV - High Stage

			Outdoor Ambient Temperature																							
			65ºF				75ºF				85ºF				95ºF				105ºF				115ºF			
			Entering Indoor Wet Bulb Temperature																							
IDB	Airflow		59	63	67	71	59	63	67	71	59	63	67	71	59	63	67	71	59	63	67	71	59	63	67	71
80	1260	MBh	49.8	50.5	51.9	54.2	49.3	50.0	51.5	53.8	48.0	48.7	50.2	52.5	45.8	46.5	48.0	50.2	43.1	43.8	45.3	47.5	40.6	41.3	42.8	45.0
		S/T	0.81	0.74	0.61	0.47	1.00	0.74	0.61	0.48	1.00	0.76	0.64	0.50	1.00	0.78	0.66	0.52	1.00	1.00	0.68	0.54	1.00	1.00	0.72	0.59
		ΔT	31	29	25	21	31	29	25	21	32	29	26	22	31	29	25	21	31	29	25	21	32	30	26	22
		Lo PR	120	122	125	130	128	129	132	137	134	135	139	144	139	141	144	149	145	146	149	154	151	153	156	161
		Hi PR	245	246	247	252	283	284	286	290	324	325	326	331	367	368	370	374	414	415	417	421	464	465	467	471
		Amps	9.7	9.6	9.6	9.7	11.1	11.1	11.0	11.1	12.6	12.6	12.6	12.7	14.3	14.3	14.3	14.4	16.3	16.2	16.2	16.3	18.5	18.5	18.5	18.6
		KW	2.73	2.73	2.72	2.75	3.06	3.05	3.05	3.07	3.42	3.42	3.41	3.44	3.81	3.81	3.80	3.83	4.25	4.25	4.24	4.27	4.76	4.76	4.76	4.78
	1450	MBh	50.4	51.1	52.6	54.9	50.0	50.7	52.2	54.4	48.7	49.4	50.9	53.1	46.5	47.2	**48.7**	50.9	43.8	44.5	45.9	48.2	41.3	42.0	43.5	45.7
		S/T	0.87	0.80	0.67	0.53	1.00	0.80	0.67	0.54	1.00	0.82	0.70	0.56	1.00	0.84	**0.72**	0.58	1.00	1.00	0.74	0.60	1.00	1.00	0.78	0.65
		ΔT	30	28	24	20	30	28	24	20	30	28	24	20	30	28	**24**	20	30	28	24	20	31	29	25	21
		Lo PR	122	124	127	132	129	131	134	139	136	137	140	145	141	143	**146**	151	147	148	151	156	153	155	158	163
		Hi PR	247	248	250	254	285	286	288	292	326	327	328	333	369	370	**372**	376	416	417	419	423	466	467	469	473
		Amps	9.7	9.7	9.7	9.8	11.1	11.1	11.1	11.2	12.7	12.7	12.7	12.8	14.4	14.4	**14.4**	14.5	16.3	16.3	16.3	16.4	18.6	18.6	18.5	18.6
		KW	2.75	2.75	2.74	2.77	3.07	3.07	3.07	3.09	3.44	3.43	3.43	3.45	3.83	3.83	**3.82**	3.85	4.27	4.26	4.26	4.28	4.78	4.78	4.77	4.80
	1650	MBh	51.3	52.0	53.5	55.8	50.9	51.6	53.1	55.3	49.6	50.3	51.8	54.0	47.4	48.1	49.5	51.8	44.6	45.3	46.8	49.1	42.2	42.9	44.3	46.6
		S/T	1.00	0.83	0.70	0.57	1.00	0.83	0.71	0.57	1.00	0.86	0.73	0.60	1.00	0.88	0.75	0.61	1.00	1.00	0.77	0.64	1.00	1.00	0.82	0.68
		ΔT	29	27	23	19	29	27	23	19	29	27	23	19	29	27	23	19	29	26	23	19	30	28	24	20
		Lo PR	124	126	129	134	132	133	136	141	138	139	143	148	143	145	148	153	149	150	153	158	155	157	160	165
		Hi PR	249	250	252	256	288	289	290	295	328	329	331	335	371	372	374	378	418	419	421	425	468	469	471	475
		Amps	9.8	9.8	9.8	9.9	11.2	11.2	11.2	11.3	12.8	12.8	12.7	12.9	14.5	14.5	14.5	14.6	16.4	16.4	16.4	16.5	18.6	18.6	18.6	18.7
		KW	2.76	2.76	2.76	2.78	3.09	3.09	3.08	3.11	3.45	3.45	3.44	3.47	3.84	3.84	3.84	3.86	4.28	4.28	4.27	4.30	4.80	4.79	4.79	4.81
85	1260	MBh	50.6	51.3	52.8	55.0	50.2	50.9	52.3	54.6	48.9	49.6	51.0	53.3	46.6	47.3	48.8	51.1	43.9	44.6	46.1	48.4	41.4	42.1	43.6	45.9
		S/T	1.00	0.83	0.70	0.57	1.00	0.84	0.71	0.57	1.00	1.00	0.73	0.60	1.00	1.00	0.75	0.62	1.00	1.00	0.77	0.64	1.00	1.00	0.82	0.69
		ΔT	35	33	29	25	35	33	29	25	36	34	30	26	35	33	29	25	35	33	29	25	36	34	30	26
		Lo PR	122	124	127	132	129	131	134	139	136	137	140	145	141	143	146	151	146	148	151	156	153	155	158	163
		Hi PR	246	247	249	253	284	285	287	291	325	326	327	332	368	369	371	375	415	416	418	422	465	466	468	472
		Amps	9.7	9.7	9.6	9.8	11.1	11.1	11.1	11.2	12.7	12.7	12.6	12.7	14.4	14.4	14.3	14.4	16.3	16.3	16.2	16.4	18.5	18.5	18.5	18.6
		KW	2.74	2.73	2.73	2.75	3.06	3.06	3.05	3.08	3.42	3.42	3.42	3.44	3.82	3.81	3.81	3.83	4.26	4.25	4.25	4.27	4.77	4.77	4.76	4.79
	1450	MBh	51.3	52.0	53.5	55.7	50.8	51.5	53.0	55.3	49.5	50.2	51.7	54.0	47.3	48.0	49.5	51.8	44.6	45.3	46.8	49.0	42.1	42.8	44.3	46.6
		S/T	1.00	0.89	0.76	0.63	1.00	0.90	0.77	0.63	1.00	1.00	0.79	0.66	1.00	1.00	0.81	0.68	1.00	1.00	0.83	0.70	1.00	1.00	1.00	0.75
		ΔT	34	32	28	24	34	32	28	24	34	32	28	24	34	32	28	24	34	32	28	24	35	33	29	25
		Lo PR	124	125	128	134	131	133	136	141	138	139	142	147	143	145	148	153	148	150	153	158	155	156	159	165
		Hi PR	248	249	251	255	286	288	289	294	327	328	330	334	370	371	373	377	417	418	420	424	467	468	470	474
		Amps	9.8	9.7	9.7	9.8	11.2	11.2	11.1	11.2	12.7	12.7	12.7	12.8	14.5	14.4	14.4	14.5	16.4	16.3	16.3	16.4	18.6	18.6	18.6	18.7
		KW	2.75	2.75	2.75	2.77	3.08	3.08	3.07	3.10	3.44	3.44	3.43	3.46	3.83	3.83	3.83	3.85	4.27	4.27	4.26	4.29	4.79	4.78	4.78	4.80
	1650	MBh	52.2	52.9	54.3	56.6	51.7	52.4	53.9	56.1	50.4	51.1	52.6	54.9	48.2	48.9	50.4	52.6	45.5	46.2	47.7	49.9	43.0	43.7	45.2	47.4
		S/T	1.00	0.92	0.80	0.66	1.00	0.93	0.80	0.67	1.00	1.00	0.83	0.69	1.00	1.00	0.84	0.71	1.00	1.00	0.87	0.73	1.00	1.00	1.00	0.78
		ΔT	33	31	27	23	33	31	27	23	33	31	27	23	33	31	27	23	33	30	27	23	34	32	28	24
		Lo PR	126	128	131	136	133	135	138	143	140	141	144	149	145	147	150	155	150	152	155	160	157	159	162	167
		Hi PR	250	251	253	257	289	290	291	296	329	330	332	336	373	374	375	380	419	420	422	426	469	470	472	476
		Amps	9.8	9.8	9.8	9.9	11.2	11.2	11.2	11.3	12.8	12.8	12.8	12.9	14.5	14.5	14.5	14.6	16.4	16.4	16.4	16.5	18.7	18.6	18.6	18.7
		KW	2.77	2.77	2.76	2.79	3.10	3.09	3.09	3.11	3.46	3.46	3.45	3.47	3.85	3.85	3.84	3.87	4.29	4.29	4.28	4.31	4.80	4.80	4.79	4.82

IDB = Entering Indoor Dry Bulb Temperature

Shaded area reflects AHRI (TVA) conditions

Amps = outdoor unit amps (comp.+fan)

High and low pressures are measured at the liquid and suction service valves.

kW = Total system power

Expanded Cooling Data — DX16TC0481C*+CA*F4961*6D*+EEP+TXV - Low Stage

			Outdoor Ambient Temperature																							
			65ºF				75ºF				85ºF				95ºF				105ºF				115ºF			
			Entering Indoor Wet Bulb Temperature																							
IDB	Airflow		59	63	67	71	59	63	67	71	59	63	67	71	59	63	67	71	59	63	67	71	59	63	67	71
70	950	MBh	35.7	36.2	37.3	-	35.4	35.9	36.9	-	34.5	35.0	36.0	-	32.9	33.4	34.4	-	30.9	31.4	32.5	-	29.1	29.6	30.7	-
		S/T	0.60	0.53	0.40	-	0.61	0.53	0.40	-	0.63	0.56	0.43	-	1.00	0.58	0.45	-	1.00	0.60	0.47	-	1.00	0.65	0.52	-
		ΔT	21	19	15	-	21	19	15	-	21	19	16	-	21	19	15	-	21	19	15	-	22	20	16	-
		Lo PR	124	125	128	-	131	133	136	-	138	139	142	-	143	145	148	-	149	150	153	-	155	157	160	-
		Hi PR	234	235	236	-	271	272	273	-	309	310	312	-	351	352	353	-	396	397	398	-	443	444	446	-
		Amps	6.1	6.1	6.1	-	7.0	7.0	7.0	-	8.0	8.0	7.9	-	9.0	9.0	9.0	-	10.2	10.2	10.2	-	11.6	11.6	11.6	-
		KW	1.72	1.72	1.72	-	1.93	1.92	1.92	-	2.15	2.15	2.15	-	2.40	2.40	2.40	-	2.68	2.67	2.67	-	3.00	3.00	2.99	-
	1050	MBh	36.1	36.6	37.6	-	35.7	36.3	37.3	-	34.8	35.3	36.4	-	33.2	33.7	34.8	-	31.3	31.8	32.8	-	29.5	30.0	31.0	-
		S/T	0.64	0.57	0.44	-	0.65	0.58	0.45	-	0.67	0.60	0.47	-	1.00	0.62	0.49	-	1.00	0.64	0.51	-	1.00	0.69	0.56	-
		ΔT	20	18	15	-	20	18	14	-	20	18	15	-	20	18	14	-	20	18	14	-	21	19	15	-
		Lo PR	125	127	130	-	132	134	137	-	139	141	144	-	145	146	149	-	150	152	155	-	157	158	162	-
		Hi PR	235	236	238	-	272	273	275	-	311	312	313	-	352	353	355	-	397	398	400	-	445	446	447	-
		Amps	6.1	6.1	6.1	-	7.0	7.0	7.0	-	8.0	8.0	8.0	-	9.1	9.1	9.1	-	10.3	10.3	10.3	-	11.7	11.7	11.7	-
		KW	1.73	1.73	1.72	-	1.93	1.93	1.93	-	2.16	2.16	2.16	-	2.41	2.41	2.40	-	2.68	2.68	2.68	-	3.01	3.01	3.00	-
	1150	MBh	36.5	37.0	38.1	-	36.2	36.7	37.7	-	35.2	35.7	36.8	-	33.6	34.1	35.2	-	31.7	32.2	33.2	-	29.9	30.4	31.5	-
		S/T	0.67	0.60	0.47	-	0.68	0.60	0.47	-	0.70	0.63	0.50	-	1.00	0.65	0.52	-	1.00	0.67	0.54	-	1.00	0.72	0.59	-
		ΔT	19	17	14	-	19	17	14	-	20	18	14	-	19	17	14	-	19	17	13	-	20	18	15	-
		Lo PR	127	128	131	-	134	136	139	-	141	142	145	-	146	148	151	-	152	153	156	-	158	160	163	-
		Hi PR	237	238	239	-	274	275	276	-	312	313	315	-	354	355	356	-	399	400	401	-	446	447	449	-
		Amps	6.2	6.1	6.1	-	7.0	7.0	7.0	-	8.0	8.0	8.0	-	9.1	9.1	9.1	-	10.3	10.3	10.3	-	11.7	11.7	11.7	-
		KW	1.74	1.73	1.73	-	1.94	1.94	1.94	-	2.17	2.17	2.16	-	2.42	2.41	2.41	-	2.69	2.69	2.69	-	3.01	3.01	3.01	-
75	950	MBh	35.7	36.2	37.3	38.9	35.4	35.9	37.0	38.6	34.5	35.0	36.0	37.7	32.9	33.4	34.4	36.1	30.9	31.4	32.5	34.1	29.1	29.6	30.7	32.3
		S/T	0.73	0.65	0.52	0.38	0.73	0.66	0.53	0.39	1.00	0.68	0.55	0.41	1.00	0.70	0.57	0.43	1.00	0.72	0.59	0.45	1.00	1.00	0.64	0.50
		ΔT	25	23	20	16	25	23	20	16	26	24	20	16	25	23	20	16	25	23	19	16	26	24	21	17
		Lo PR	124	125	128	134	131	133	136	141	138	139	142	148	143	145	148	153	149	150	153	159	156	157	160	165
		Hi PR	234	235	237	241	271	272	274	278	309	310	312	316	351	352	354	358	396	397	398	402	444	445	446	450
		Amps	6.1	6.1	6.1	6.1	7.0	7.0	6.9	7.0	8.0	8.0	7.9	8.0	9.0	9.0	9.0	9.1	10.2	10.2	10.2	10.3	11.6	11.6	11.6	11.7
		KW	1.72	1.72	1.71	1.73	1.92	1.92	1.92	1.93	2.15	2.15	2.15	2.16	2.40	2.40	2.39	2.41	2.67	2.67	2.67	2.69	3.00	3.00	2.99	3.01
	1050	MBh	36.1	36.6	37.7	39.3	35.8	36.3	37.3	39.0	34.8	35.3	36.4	38.0	33.2	33.7	34.8	36.4	31.3	31.8	32.9	34.5	29.5	30.0	31.1	32.7
		S/T	0.77	0.70	0.56	0.43	0.77	0.70	0.57	0.43	1.00	0.73	0.59	0.46	1.00	0.74	0.61	0.48	1.00	0.77	0.63	0.50	1.00	1.00	0.68	0.55
		ΔT	25	23	19	15	25	23	19	15	25	23	19	15	24	23	19	15	24	22	19	15	25	23	20	16
		Lo PR	125	127	130	135	133	134	137	142	139	141	144	149	145	146	149	155	150	152	155	160	157	158	162	167
		Hi PR	236	237	238	242	272	273	275	279	311	312	314	318	352	353	355	359	397	398	400	404	445	446	448	452
		Amps	6.1	6.1	6.1	6.2	7.0	7.0	7.0	7.0	8.0	8.0	8.0	8.0	9.1	9.1	9.0	9.1	10.3	10.3	10.2	10.3	11.7	11.7	11.7	11.7
		KW	1.73	1.73	1.72	1.74	1.93	1.93	1.93	1.94	2.16	2.16	2.16	2.17	2.41	2.41	2.40	2.42	2.68	2.68	2.68	2.69	3.01	3.00	3.00	3.02
	1150	MBh	36.5	37.0	38.1	39.7	36.2	36.7	37.8	39.4	35.3	35.8	36.8	38.4	33.7	34.2	35.2	36.8	31.7	32.2	33.3	34.9	29.9	30.4	31.5	33.1
		S/T	0.80	0.72	0.59	0.45	1.00	0.73	0.60	0.46	1.00	0.75	0.62	0.48	1.00	0.77	0.64	0.50	1.00	0.79	0.66	0.52	1.00	1.00	0.71	0.57
		ΔT	24	22	18	14	24	22	18	14	24	22	18	15	24	22	18	14	23	21	18	14	25	23	19	15
		Lo PR	127	128	131	136	134	136	139	144	141	142	145	151	146	148	151	156	152	153	156	162	158	160	163	168
		Hi PR	237	238	240	244	274	275	276	281	312	313	315	319	354	355	357	361	399	400	401	405	447	448	449	453
		Amps	6.1	6.1	6.1	6.2	7.0	7.0	7.0	7.1	8.0	8.0	8.0	8.1	9.1	9.1	9.1	9.1	10.3	10.3	10.3	10.3	11.7	11.7	11.7	11.7
		KW	1.73	1.73	1.73	1.75	1.94	1.94	1.93	1.95	2.17	2.17	2.16	2.18	2.41	2.41	2.41	2.42	2.69	2.69	2.68	2.70	3.01	3.01	3.01	3.02

IDB = Entering Indoor Dry Bulb Temperature

Shaded area reflects ACCA (TVA) conditions

Amps = outdoor unit amps (comp.+fan)

High and low pressures are measured at the liquid and suction service valves.

kW = Total system power

Expanded Cooling Data — DX16TC0481C*+CA*F4961*6D*+EEP+TXV - Low Stage

			Outdoor Ambient Temperature																							
			65ºF				75ºF				85ºF				95ºF				105ºF				115ºF			
			Entering Indoor Wet Bulb Temperature																							
IDB	Airflow		59	63	67	71	59	63	67	71	59	63	67	71	59	63	67	71	59	63	67	71	59	63	67	71
80	950	MBh	35.9	36.4	37.5	39.1	35.6	36.1	37.2	38.8	34.7	35.2	36.2	37.8	33.1	33.6	34.6	36.3	31.1	31.6	32.7	34.3	29.3	29.8	30.9	32.5
		S/T	1.00	0.77	0.64	0.51	1.00	0.78	0.65	0.51	1.00	0.81	0.67	0.54	1.00	1.00	0.69	0.55	1.00	1.00	0.71	0.58	1.00	1.00	0.76	0.63
		ΔT	30	28	24	20	30	28	24	20	30	28	24	21	30	28	24	20	29	28	24	20	31	29	25	21
		Lo PR	124	126	129	134	132	133	136	142	138	140	143	148	144	145	148	154	149	151	154	159	156	158	161	166
		Hi PR	234	235	237	241	271	272	274	278	310	311	313	317	351	352	354	358	396	397	399	403	444	445	447	451
		Amps	6.1	6.1	6.1	6.1	7.0	7.0	7.0	7.0	8.0	8.0	7.9	8.0	9.0	9.0	9.0	9.1	10.2	10.2	10.2	10.3	11.6	11.6	11.6	11.7
		KW	1.72	1.72	1.72	1.73	1.93	1.92	1.92	1.94	2.15	2.15	2.15	2.16	2.40	2.40	2.40	2.41	2.68	2.67	2.67	2.69	3.00	3.00	2.99	3.01
	1050	MBh	36.3	36.8	37.8	39.5	36.0	36.5	37.5	39.1	35.0	35.5	36.6	38.2	33.4	33.9	**35.0**	36.6	31.5	32.0	33.0	34.7	29.7	30.2	31.3	32.9
		S/T	1.00	0.82	0.69	0.55	1.00	0.82	0.69	0.55	1.00	0.85	0.72	0.58	1.00	1.00	**0.73**	0.60	1.00	1.00	0.76	0.62	1.00	1.00	0.81	0.67
		ΔT	29	27	23	19	29	27	23	19	29	27	23	20	29	27	**23**	19	29	27	23	19	30	28	24	20
		Lo PR	126	127	130	135	133	135	138	143	140	141	144	150	145	147	**150**	155	151	152	155	161	157	159	162	167
		Hi PR	236	237	239	243	273	274	275	280	311	312	314	318	353	354	**356**	360	398	399	400	404	445	446	448	452
		Amps	6.1	6.1	6.1	6.2	7.0	7.0	7.0	7.1	8.0	8.0	8.0	8.0	9.1	9.1	**9.1**	9.1	10.3	10.3	10.2	10.3	11.7	11.7	11.7	11.7
		KW	1.73	1.73	1.72	1.74	1.93	1.93	1.93	1.94	2.16	2.16	2.16	2.17	2.41	2.41	**2.40**	2.42	2.68	2.68	2.68	2.69	3.01	3.01	3.00	3.02
	1150	MBh	36.7	37.2	38.3	39.9	36.4	36.9	37.9	39.6	35.4	35.9	37.0	38.6	33.8	34.3	35.4	37.0	31.9	32.4	33.5	35.1	30.1	30.6	31.7	33.3
		S/T	1.00	0.84	0.71	0.57	1.00	0.85	0.72	0.58	1.00	0.87	0.74	0.60	1.00	1.00	0.76	0.62	1.00	1.00	0.78	0.64	1.00	1.00	0.83	0.69
		ΔT	28	26	22	19	28	26	22	19	28	26	23	19	28	26	22	19	28	26	22	18	29	27	23	20
		Lo PR	127	129	132	137	135	136	139	144	141	143	146	151	147	148	151	157	152	154	157	162	159	160	164	169
		Hi PR	237	238	240	244	274	275	277	281	313	314	315	320	354	355	357	361	399	400	402	406	447	448	450	454
		Amps	6.1	6.1	6.1	6.2	7.0	7.0	7.0	7.1	8.0	8.0	8.0	8.1	9.1	9.1	9.1	9.1	10.3	10.3	10.3	10.3	11.7	11.7	11.7	11.8
		KW	1.74	1.73	1.73	1.75	1.94	1.94	1.94	1.95	2.17	2.17	2.16	2.18	2.41	2.41	2.41	2.43	2.69	2.69	2.69	2.70	3.01	3.01	3.01	3.02
85	950	MBh	36.5	37.0	38.1	39.7	36.2	36.7	37.8	39.4	35.3	35.8	36.8	38.4	33.7	34.2	35.2	36.9	31.7	32.2	33.3	34.9	29.9	30.4	31.5	33.1
		S/T	1.00	0.87	0.74	0.60	1.00	0.88	0.75	0.61	1.00	1.00	0.77	0.63	1.00	1.00	0.79	0.65	1.00	1.00	0.81	0.67	1.00	1.00	1.00	0.72
		ΔT	34	32	28	24	34	32	28	24	34	32	28	24	34	32	28	24	33	31	28	24	35	33	29	25
		Lo PR	126	128	131	136	134	135	138	143	140	142	145	150	146	147	150	156	151	153	156	161	158	159	163	168
		Hi PR	236	237	238	242	272	273	275	279	311	312	314	318	352	354	355	359	397	398	400	404	445	446	448	452
		Amps	6.1	6.1	6.1	6.1	7.0	7.0	7.0	7.0	8.0	8.0	8.0	8.0	9.1	9.0	9.0	9.1	10.3	10.2	10.2	10.3	11.7	11.7	11.6	11.7
		KW	1.72	1.72	1.72	1.74	1.93	1.93	1.92	1.94	2.16	2.16	2.15	2.17	2.40	2.40	2.40	2.41	2.68	2.68	2.67	2.69	3.00	3.00	3.00	3.01
	1050	MBh	36.9	37.4	38.4	40.1	36.6	37.1	38.1	39.7	35.6	36.1	37.2	38.8	34.0	34.5	35.6	37.2	32.1	32.6	33.6	35.3	30.3	30.8	31.9	33.5
		S/T	1.00	0.91	0.78	0.65	1.00	1.00	0.79	0.65	1.00	1.00	0.81	0.68	1.00	1.00	0.83	0.69	1.00	1.00	0.85	0.72	1.00	1.00	1.00	0.77
		ΔT	33	31	27	23	33	31	27	23	33	31	27	24	33	31	27	23	32	31	27	23	34	32	28	24
		Lo PR	127	129	132	137	135	136	140	145	141	143	146	151	147	149	152	157	152	154	157	162	159	161	164	169
		Hi PR	237	238	240	244	274	275	277	281	312	313	315	319	354	355	357	361	399	400	401	406	447	448	449	453
		Amps	6.1	6.1	6.1	6.2	7.0	7.0	7.0	7.1	8.0	8.0	8.0	8.1	9.1	9.1	9.1	9.1	10.3	10.3	10.3	10.3	11.7	11.7	11.7	11.7
		KW	1.73	1.73	1.73	1.74	1.94	1.94	1.93	1.95	2.17	2.16	2.16	2.18	2.41	2.41	2.41	2.42	2.69	2.69	2.68	2.70	3.01	3.01	3.01	3.02
	1150	MBh	37.3	37.8	38.9	40.5	37.0	37.5	38.5	40.2	36.0	36.5	37.6	39.2	34.4	34.9	36.0	37.6	32.5	33.0	34.1	35.7	30.7	31.2	32.3	33.9
		S/T	1.00	0.94	0.81	0.67	1.00	1.00	0.82	0.68	1.00	1.00	0.84	0.70	1.00	1.00	0.86	0.72	1.00	1.00	1.00	0.74	1.00	1.00	1.00	0.79
		ΔT	32	30	26	23	32	30	26	22	32	30	27	23	32	30	26	22	32	30	26	22	33	31	27	23
		Lo PR	129	130	134	139	136	138	141	146	143	145	148	153	149	150	153	158	154	156	159	164	161	162	165	171
		Hi PR	239	240	241	245	275	276	278	282	314	315	317	321	355	356	358	362	400	401	403	407	448	449	451	455
		Amps	6.2	6.2	6.1	6.2	7.1	7.0	7.0	7.1	8.0	8.0	8.0	8.1	9.1	9.1	9.1	9.2	10.3	10.3	10.3	10.4	11.7	11.7	11.7	11.8
		KW	1.74	1.74	1.73	1.75	1.94	1.94	1.94	1.95	2.17	2.17	2.17	2.18	2.42	2.42	2.41	2.43	2.69	2.69	2.69	2.71	3.02	3.02	3.01	3.03

IDB = Entering Indoor Dry Bulb Temperature

Shaded area reflects AHRI (TVA) conditions

Amps = outdoor unit amps (comp.+fan)

High and low pressures are measured at the liquid and suction service valves.

kW = Total system power

Expanded Cooling Data — DX16TC0601C*+CA*F4961*6D*+EEP+TXV - High Stage

			Outdoor Ambient Temperature																							
			65ºF				75ºF				85ºF				95ºF				105ºF				115ºF			
			Entering Indoor Wet Bulb Temperature																							
IDB	Airflow		59	63	67	71	59	63	67	71	59	63	67	71	59	63	67	71	59	63	67	71	59	63	67	71
70	1480	MBh	58.1	58.9	60.7	-	57.6	58.4	60.1	-	56.1	56.9	58.6	-	53.5	54.4	56.1	-	50.4	51.2	52.9	-	47.5	48.3	50.0	-
		S/T	0.61	0.54	0.42	-	0.62	0.55	0.42	-	0.64	0.57	0.45	-	0.66	0.59	0.46	-	0.68	0.61	0.48	-	1.00	0.66	0.53	-
		ΔT	22	20	16	-	22	20	16	-	22	20	16	-	22	20	16	-	22	19	15	-	23	21	17	-
		Lo PR	114	116	118	-	121	122	125	-	127	128	131	-	132	134	136	-	137	139	141	-	143	145	148	-
		Hi PR	244	245	246	-	282	283	284	-	322	323	324	-	365	366	367	-	411	412	414	-	460	461	463	-
		Amps	11.6	11.6	11.5	-	13.2	13.2	13.2	-	15.1	15.1	15.1	-	17.2	17.2	17.1	-	19.4	19.4	19.4	-	22.1	22.1	22.1	-
		KW	3.20	3.20	3.19	-	3.59	3.58	3.58	-	4.02	4.02	4.01	-	4.49	4.49	4.48	-	5.01	5.01	5.00	-	5.63	5.62	5.62	-
	1600	MBh	58.7	59.5	61.2	-	58.2	59.0	60.7	-	56.7	57.5	59.2	-	54.1	54.9	56.6	-	51.0	51.8	53.5	-	48.1	48.9	50.6	-
		S/T	0.63	0.56	0.44	-	0.64	0.57	0.45	-	0.66	0.59	0.47	-	0.68	0.61	0.49	-	0.70	0.63	0.51	-	1.00	0.68	0.55	-
		ΔT	21	19	15	-	21	19	15	-	21	19	15	-	21	19	15	-	21	19	15	-	22	20	16	-
		Lo PR	115	117	120	-	122	124	127	-	128	130	133	-	133	135	138	-	138	140	143	-	145	146	149	-
		Hi PR	245	246	248	-	283	284	286	-	323	324	326	-	366	367	369	-	412	413	415	-	462	463	464	-
		Amps	11.6	11.6	11.6	-	13.3	13.3	13.3	-	15.2	15.2	15.1	-	17.2	17.2	17.2	-	19.5	19.5	19.4	-	22.2	22.1	22.1	-
		KW	3.21	3.21	3.20	-	3.60	3.60	3.59	-	4.03	4.03	4.02	-	4.50	4.50	4.49	-	5.02	5.02	5.01	-	5.64	5.63	5.63	-
	1750	MBh	59.5	60.3	62.0	-	59.0	59.8	61.5	-	57.5	58.3	60.0	-	54.9	55.7	57.5	-	51.8	52.6	54.3	-	48.9	49.7	51.4	-
		S/T	0.65	0.58	0.46	-	0.66	0.59	0.46	-	0.68	0.61	0.48	-	0.70	0.63	0.50	-	0.72	0.65	0.52	-	1.00	0.69	0.57	-
		ΔT	20	18	14	-	20	18	14	-	21	18	14	-	20	18	14	-	20	18	14	-	21	19	15	-
		Lo PR	117	118	121	-	124	125	128	-	130	131	134	-	135	136	139	-	140	141	144	-	146	148	150	-
		Hi PR	246	248	249	-	285	286	287	-	325	326	327	-	368	369	370	-	414	415	417	-	463	464	466	-
		Amps	11.7	11.7	11.6	-	13.4	13.3	13.3	-	15.2	15.2	15.2	-	17.3	17.3	17.2	-	19.5	19.5	19.5	-	22.2	22.2	22.2	-
		KW	3.22	3.22	3.21	-	3.61	3.61	3.60	-	4.04	4.04	4.03	-	4.51	4.51	4.50	-	5.04	5.03	5.03	-	5.65	5.65	5.64	-
75	1480	MBh	58.2	59.0	60.7	63.3	57.7	58.5	60.2	62.8	56.2	57.0	58.7	61.3	53.6	54.4	56.1	58.7	50.4	51.2	53.0	55.6	47.6	48.4	50.1	52.7
		S/T	0.73	0.66	0.54	0.40	0.74	0.67	0.54	0.41	0.76	0.69	0.57	0.43	0.78	0.71	0.58	0.45	1.00	0.73	0.60	0.47	1.00	0.78	0.65	0.52
		ΔT	27	25	21	16	27	24	20	16	27	25	21	17	27	24	20	16	26	24	20	16	28	25	21	17
		Lo PR	114	116	119	123	121	122	125	130	127	128	131	136	132	134	136	141	137	139	141	146	143	145	148	152
		Hi PR	244	245	247	251	282	283	285	289	322	323	325	329	365	366	368	372	411	412	414	418	461	462	463	468
		Amps	11.6	11.5	11.5	11.6	13.2	13.2	13.2	13.3	15.1	15.1	15.1	15.2	17.2	17.1	17.1	17.2	19.4	19.4	19.4	19.5	22.1	22.1	22.1	22.2
		KW	3.20	3.19	3.19	3.22	3.59	3.58	3.58	3.61	4.02	4.01	4.01	4.04	4.49	4.48	4.48	4.51	5.01	5.01	5.00	5.03	5.62	5.62	5.61	5.64
	1600	MBh	58.7	59.5	61.3	63.9	58.2	59.0	60.7	63.4	56.7	57.5	59.3	61.9	54.1	55.0	56.7	59.3	51.0	51.8	53.5	56.1	48.1	48.9	50.6	53.3
		S/T	0.75	0.68	0.56	0.43	0.76	0.69	0.56	0.43	0.78	0.71	0.59	0.46	1.00	0.73	0.61	0.47	1.00	0.75	0.63	0.49	1.00	0.80	0.67	0.54
		ΔT	26	24	20	16	26	24	20	16	26	24	20	16	26	24	20	16	26	23	19	15	27	25	21	17
		Lo PR	115	117	120	124	122	124	127	131	128	130	133	137	133	135	138	142	138	140	143	147	145	146	149	154
		Hi PR	245	246	248	252	283	284	286	290	323	324	326	330	366	367	369	373	412	413	415	419	462	463	465	469
		Amps	11.6	11.6	11.6	11.7	13.3	13.3	13.2	13.4	15.2	15.2	15.1	15.3	17.2	17.2	17.2	17.3	19.5	19.5	19.4	19.6	22.1	22.1	22.1	22.2
		KW	3.21	3.21	3.20	3.23	3.60	3.59	3.59	3.62	4.03	4.03	4.02	4.05	4.50	4.49	4.49	4.52	5.02	5.02	5.01	5.04	5.63	5.63	5.62	5.65
	1750	MBh	59.6	60.4	62.1	64.7	59.0	59.8	61.6	64.2	57.5	58.3	60.1	62.7	55.0	55.8	57.5	60.1	51.8	52.6	54.3	57.0	48.9	49.7	51.5	54.1
		S/T	0.77	0.70	0.57	0.44	0.78	0.71	0.58	0.45	0.80	0.73	0.60	0.47	1.00	0.75	0.62	0.49	1.00	0.77	0.64	0.51	1.00	0.81	0.69	0.56
		ΔT	25	23	19	15	25	23	19	15	25	23	19	15	25	23	19	15	25	23	19	14	26	24	20	16
		Lo PR	117	118	121	126	124	125	128	133	130	131	134	139	135	136	139	144	140	141	144	149	146	148	150	155
		Hi PR	247	248	249	254	285	286	288	292	325	326	327	332	368	369	370	375	414	415	417	421	464	465	466	470
		Amps	11.7	11.6	11.6	11.7	13.3	13.3	13.3	13.4	15.2	15.2	15.2	15.3	17.3	17.2	17.2	17.3	19.5	19.5	19.5	19.6	22.2	22.2	22.2	22.3
		KW	3.22	3.22	3.21	3.24	3.61	3.61	3.60	3.63	4.04	4.04	4.03	4.06	4.51	4.51	4.50	4.53	5.03	5.03	5.02	5.05	5.65	5.64	5.64	5.67

IDB = Entering Indoor Dry Bulb Temperature

Shaded area reflects ACCA (TVA) conditions

Amps = outdoor unit amps (comp.+fan)

High and low pressures are measured at the liquid and suction service valves.

kW = Total system power

Expanded Cooling Data — DX16TC0601C*+CA*F4961*6D*+EEP+TXV - High Stage

			Outdoor Ambient Temperature																							
			65ºF				75ºF				85ºF				95ºF				105ºF				115ºF			
			Entering Indoor Wet Bulb Temperature																							
IDB	Airflow		59	63	67	71	59	63	67	71	59	63	67	71	59	63	67	71	59	63	67	71	59	63	67	71
80	1480	MBh	58.5	59.3	61.0	63.6	58.0	58.8	60.5	63.1	56.5	57.3	59.0	61.6	53.9	54.7	56.4	59.0	50.7	51.5	53.3	55.9	47.9	48.7	50.4	53.0
		S/T	0.85	0.78	0.65	0.52	0.85	0.78	0.66	0.53	1.00	0.80	0.68	0.55	1.00	0.82	0.70	0.57	1.00	0.84	0.72	0.59	1.00	0.89	0.77	0.63
		ΔT	31	29	25	21	31	29	25	21	32	30	26	21	31	29	25	21	31	29	25	21	32	30	26	22
		Lo PR	115	116	119	124	122	123	126	131	128	129	132	137	133	134	137	142	138	139	142	147	144	145	148	153
		Hi PR	244	245	247	251	282	283	285	289	322	323	325	329	365	366	368	372	412	413	414	419	461	462	464	468
		Amps	11.6	11.5	11.5	11.6	13.2	13.2	13.2	13.3	15.1	15.1	15.1	15.2	17.2	17.2	17.1	17.3	19.4	19.4	19.4	19.5	22.1	22.1	22.1	22.2
		KW	3.20	3.20	3.19	3.22	3.59	3.58	3.58	3.61	4.02	4.02	4.01	4.04	4.49	4.48	4.48	4.51	5.01	5.01	5.00	5.03	5.62	5.62	5.61	5.64
	1600	MBh	59.0	59.8	61.6	64.2	58.5	59.3	61.0	63.7	57.0	57.8	59.5	62.2	54.4	55.3	**57.0**	59.6	51.3	52.1	53.8	56.4	48.4	49.2	50.9	53.6
		S/T	0.87	0.80	0.67	0.54	1.00	0.80	0.68	0.55	1.00	0.83	0.70	0.57	1.00	0.85	**0.72**	0.59	1.00	0.87	0.74	0.61	1.00	1.00	0.79	0.66
		ΔT	31	29	25	20	31	28	24	20	31	29	25	21	31	28	**24**	20	30	28	24	20	32	30	26	21
		Lo PR	116	117	120	125	123	124	127	132	129	130	133	138	134	135	**138**	143	139	140	143	148	145	146	149	154
		Hi PR	246	247	248	252	284	285	286	291	324	325	326	330	367	368	**369**	373	413	414	416	420	462	463	465	469
		Amps	11.6	11.6	11.6	11.7	13.3	13.3	13.3	13.4	15.2	15.2	15.1	15.3	17.2	17.2	**17.2**	17.3	19.5	19.5	19.4	19.6	22.2	22.1	22.1	22.2
		KW	3.21	3.21	3.20	3.23	3.60	3.60	3.59	3.62	4.03	4.03	4.02	4.05	4.50	4.50	**4.49**	4.52	5.02	5.02	5.01	5.04	5.64	5.63	5.63	5.66
	1750	MBh	59.8	60.7	62.4	65.0	59.3	60.1	61.9	64.5	57.8	58.6	60.4	63.0	55.3	56.1	57.8	60.4	52.1	52.9	54.6	57.3	49.2	50.0	51.8	54.4
		S/T	0.88	0.81	0.69	0.56	1.00	0.82	0.70	0.56	1.00	0.84	0.72	0.59	1.00	0.86	0.74	0.61	1.00	0.88	0.76	0.63	1.00	1.00	0.80	0.67
		ΔT	30	28	24	20	30	28	24	19	30	28	24	20	30	28	24	19	30	27	23	19	31	29	25	21
		Lo PR	118	119	122	127	124	126	129	133	130	132	135	139	135	137	140	144	140	142	145	149	147	148	151	156
		Hi PR	247	248	250	254	285	286	288	292	325	326	328	332	368	369	371	375	415	416	417	421	464	465	467	471
		Amps	11.7	11.7	11.6	11.8	13.4	13.3	13.3	13.4	15.2	15.2	15.2	15.3	17.3	17.3	17.2	17.4	19.5	19.5	19.5	19.6	22.2	22.2	22.2	22.3
		KW	3.22	3.22	3.21	3.24	3.61	3.61	3.60	3.63	4.04	4.04	4.03	4.06	4.51	4.51	4.50	4.53	5.03	5.03	5.03	5.05	5.65	5.65	5.64	5.67
85	1480	MBh	59.4	60.2	62.0	64.6	58.9	59.7	61.4	64.1	57.4	58.2	59.9	62.6	54.8	55.7	57.4	60.0	51.7	52.5	54.2	56.8	48.8	49.6	51.3	54.0
		S/T	1.00	0.87	0.74	0.61	1.00	0.88	0.75	0.62	1.00	0.90	0.77	0.64	1.00	1.00	0.79	0.66	1.00	1.00	0.81	0.68	1.00	1.00	0.86	0.73
		ΔT	36	33	29	25	36	33	29	25	36	34	30	26	36	33	29	25	35	33	29	25	37	34	30	26
		Lo PR	116	118	121	125	123	125	128	132	129	131	134	138	134	136	139	143	139	141	144	148	146	147	150	155
		Hi PR	245	246	248	252	283	285	286	290	323	324	326	330	366	367	369	373	413	414	415	420	462	463	465	469
		Amps	11.6	11.6	11.6	11.7	13.3	13.3	13.2	13.4	15.2	15.1	15.1	15.2	17.2	17.2	17.2	17.3	19.5	19.5	19.4	19.6	22.1	22.1	22.1	22.2
		KW	3.21	3.20	3.20	3.23	3.59	3.59	3.58	3.61	4.03	4.02	4.02	4.05	4.50	4.49	4.49	4.52	5.02	5.02	5.01	5.04	5.63	5.63	5.62	5.65
	1600	MBh	60.0	60.8	62.5	65.1	59.5	60.3	62.0	64.6	58.0	58.8	60.5	63.1	55.4	56.2	57.9	60.6	52.3	53.1	54.8	57.4	49.4	50.2	51.9	54.5
		S/T	1.00	0.89	0.77	0.64	1.00	0.90	0.77	0.64	1.00	0.92	0.80	0.66	1.00	1.00	0.81	0.68	1.00	1.00	0.83	0.70	1.00	1.00	0.88	0.75
		ΔT	35	33	29	25	35	33	29	25	35	33	29	25	35	33	29	25	35	32	28	24	36	34	30	26
		Lo PR	118	119	122	127	124	126	129	134	130	132	135	140	136	137	140	145	141	142	145	150	147	148	151	156
		Hi PR	247	248	249	254	285	286	287	292	325	326	327	332	368	369	370	375	414	415	417	421	463	465	466	470
		Amps	11.6	11.6	11.6	11.7	13.3	13.3	13.3	13.4	15.2	15.2	15.2	15.3	17.2	17.2	17.2	17.3	19.5	19.5	19.5	19.6	22.2	22.2	22.1	22.3
		KW	3.22	3.22	3.21	3.24	3.61	3.60	3.60	3.63	4.04	4.04	4.03	4.06	4.51	4.50	4.50	4.53	5.03	5.03	5.02	5.05	5.64	5.64	5.63	5.66
	1750	MBh	60.8	61.6	63.3	66.0	60.3	61.1	62.8	65.4	58.8	59.6	61.3	63.9	56.2	57.0	58.8	61.4	53.1	53.9	55.6	58.2	50.2	51.0	52.7	55.3
		S/T	1.00	0.91	0.78	0.65	1.00	0.91	0.79	0.66	1.00	0.94	0.81	0.68	1.00	1.00	0.83	0.70	1.00	1.00	0.85	0.72	1.00	1.00	0.90	0.77
		ΔT	34	32	28	24	34	32	28	24	34	32	28	24	34	32	28	24	34	32	28	23	35	33	29	25
		Lo PR	119	121	123	128	126	127	130	135	132	133	136	141	137	139	141	146	142	143	146	151	148	150	153	157
		Hi PR	248	249	251	255	286	287	289	293	326	327	329	333	369	370	372	376	416	417	418	423	465	466	468	472
		Amps	11.7	11.7	11.7	11.8	13.4	13.4	13.3	13.5	15.3	15.3	15.2	15.4	17.3	17.3	17.3	17.4	19.6	19.6	19.5	19.7	22.2	22.2	22.2	22.3
		KW	3.23	3.23	3.22	3.25	3.62	3.62	3.61	3.64	4.05	4.05	4.04	4.07	4.52	4.52	4.51	4.54	5.04	5.04	5.03	5.06	5.66	5.65	5.65	5.68

IDB = Entering Indoor Dry Bulb Temperature

Shaded area reflects AHRI (TVA) conditions

Amps = outdoor unit amps (comp.+fan)

High and low pressures are measured at the liquid and suction service valves.

kW = Total system power

			Outdoor Ambient Temperature																							
			65ºF				75ºF				85ºF				95ºF				105ºF				115ºF			
			Entering Indoor Wet Bulb Temperature																							
IDB	Airflow		59	63	67	71	59	63	67	71	59	63	67	71	59	63	67	71	59	63	67	71	59	63	67	71
70	1150	MBh	41.4	42.0	43.3	-	41.1	41.7	42.9	-	40.0	40.6	41.8	-	38.1	38.7	40.0	-	35.9	36.5	37.7	-	33.8	34.4	35.6	-
		S/T	0.60	0.52	0.40	-	0.60	0.53	0.40	-	0.63	0.55	0.43	-	0.64	0.57	0.44	-	0.66	0.59	0.46	-	1.00	0.64	0.51	-
		ΔT	22	20	16	-	22	20	16	-	22	20	16	-	22	20	16	-	22	20	16	-	23	21	17	-
		Lo PR	116	118	121	-	123	125	128	-	130	131	134	-	135	136	139	-	140	141	144	-	146	148	151	-
		Hi PR	232	233	234	-	268	269	271	-	306	307	309	-	347	348	350	-	392	393	394	-	439	440	442	-
		Amps	7.2	7.2	7.2	-	8.3	8.3	8.3	-	9.5	9.5	9.5	-	10.8	10.8	10.7	-	12.2	12.2	12.2	-	13.9	13.9	13.8	-
		KW	2.01	2.00	2.00	-	2.25	2.25	2.24	-	2.52	2.52	2.51	-	2.82	2.81	2.81	-	3.14	3.14	3.14	-	3.53	3.53	3.52	-
	1250	MBh	41.8	42.4	43.6	-	41.4	42.0	43.2	-	40.4	40.9	42.2	-	38.5	39.1	40.3	-	36.2	36.8	38.1	-	34.2	34.7	36.0	-
		S/T	0.63	0.56	0.43	-	0.63	0.56	0.43	-	0.66	0.59	0.46	-	0.68	0.60	0.48	-	0.70	0.63	0.50	-	1.00	0.67	0.55	-
		ΔT	21	19	15	-	21	19	15	-	21	19	15	-	21	19	15	-	21	19	15	-	22	20	16	-
		Lo PR	117	119	122	-	124	126	129	-	131	132	135	-	136	137	140	-	141	142	145	-	147	149	152	-
		Hi PR	233	234	235	-	269	270	272	-	307	308	310	-	349	350	351	-	393	394	395	-	440	441	443	-
		Amps	7.3	7.3	7.2	-	8.3	8.3	8.3	-	9.5	9.5	9.5	-	10.8	10.8	10.8	-	12.2	12.2	12.2	-	13.9	13.9	13.9	-
		KW	2.01	2.01	2.01	-	2.26	2.25	2.25	-	2.53	2.53	2.52	-	2.82	2.82	2.82	-	3.15	3.15	3.15	-	3.54	3.54	3.53	-
	1400	MBh	42.4	43.0	44.2	-	42.1	42.6	43.9	-	41.0	41.6	42.8	-	39.1	39.7	40.9	-	36.9	37.4	38.7	-	34.8	35.4	36.6	-
		S/T	0.66	0.59	0.46	-	0.67	0.59	0.47	-	0.69	0.62	0.49	-	0.71	0.64	0.51	-	0.73	0.66	0.53	-	1.00	0.71	0.58	-
		ΔT	20	18	14	-	20	18	14	-	20	18	14	-	20	18	14	-	20	18	14	-	21	19	15	-
		Lo PR	119	121	124	-	126	128	131	-	132	134	137	-	138	139	142	-	143	144	147	-	149	151	154	-
		Hi PR	235	236	237	-	271	272	274	-	309	310	312	-	350	351	353	-	395	396	397	-	442	443	445	-
		Amps	7.3	7.3	7.3	-	8.4	8.4	8.4	-	9.6	9.6	9.5	-	10.8	10.8	10.8	-	12.3	12.3	12.2	-	14.0	13.9	13.9	-
		KW	2.02	2.02	2.02	-	2.27	2.26	2.26	-	2.54	2.54	2.53	-	2.83	2.83	2.83	-	3.16	3.16	3.16	-	3.55	3.55	3.54	-
75	1150	MBh	41.5	42.0	43.3	45.2	41.1	41.7	42.9	44.8	40.0	40.6	41.8	43.7	38.2	38.7	40.0	41.9	35.9	36.5	37.7	39.6	33.8	34.4	35.6	37.5
		S/T	0.72	0.65	0.52	0.38	0.72	0.65	0.52	0.39	0.75	0.68	0.55	0.41	1.00	0.69	0.57	0.43	1.00	0.71	0.59	0.45	1.00	0.76	0.64	0.50
		ΔT	27	24	21	17	26	24	21	16	27	25	21	17	26	24	20	16	26	24	20	16	27	25	22	17
		Lo PR	116	118	121	126	123	125	128	133	130	131	134	139	135	136	139	144	140	141	144	149	146	148	151	156
		Hi PR	232	233	234	238	268	269	271	275	306	307	309	313	348	349	350	354	392	393	394	398	439	440	442	446
		Amps	7.2	7.2	7.2	7.3	8.3	8.3	8.3	8.3	9.5	9.5	9.4	9.5	10.8	10.7	10.7	10.8	12.2	12.2	12.2	12.2	13.9	13.9	13.8	13.9
		KW	2.00	2.00	2.00	2.02	2.25	2.25	2.24	2.26	2.52	2.52	2.51	2.53	2.81	2.81	2.81	2.83	3.14	3.14	3.14	3.16	3.53	3.53	3.52	3.54
	1250	MBh	41.8	42.4	43.6	45.5	41.5	42.0	43.3	45.2	40.4	41.0	42.2	44.1	38.5	39.1	40.3	42.2	36.3	36.8	38.1	40.0	34.2	34.8	36.0	37.9
		S/T	0.75	0.68	0.55	0.42	0.76	0.68	0.56	0.42	0.78	0.71	0.58	0.45	1.00	0.73	0.60	0.46	1.00	0.75	0.62	0.48	1.00	0.80	0.67	0.53
		ΔT	26	24	20	16	26	24	20	16	26	24	20	16	26	24	20	16	25	23	19	15	27	25	21	17
		Lo PR	117	119	122	127	124	126	129	134	131	132	135	140	136	137	140	145	141	142	145	150	147	149	152	157
		Hi PR	233	234	236	240	269	270	272	276	308	309	310	314	349	350	351	355	393	394	396	400	440	441	443	447
		Amps	7.3	7.3	7.2	7.3	8.3	8.3	8.3	8.4	9.5	9.5	9.5	9.6	10.8	10.8	10.8	10.8	12.2	12.2	12.2	12.3	13.9	13.9	13.9	14.0
		KW	2.01	2.01	2.01	2.02	2.26	2.25	2.25	2.27	2.53	2.53	2.52	2.54	2.82	2.82	2.82	2.83	3.15	3.15	3.14	3.16	3.54	3.53	3.53	3.55
	1400	MBh	42.4	43.0	44.3	46.1	42.1	42.7	43.9	45.8	41.0	41.6	42.8	44.7	39.1	39.7	41.0	42.8	36.9	37.5	38.7	40.6	34.8	35.4	36.6	38.5
		S/T	0.78	0.71	0.58	0.45	0.79	0.72	0.59	0.45	0.81	0.74	0.61	0.48	1.00	0.76	0.63	0.49	1.00	0.78	0.65	0.52	1.00	0.83	0.70	0.56
		ΔT	25	23	19	15	25	23	19	15	25	23	19	15	25	23	19	15	24	22	18	14	26	24	20	16
		Lo PR	119	121	124	129	126	128	131	136	132	134	137	142	138	139	142	147	143	144	147	152	149	151	154	159
		Hi PR	235	236	237	242	271	272	274	278	309	310	312	316	351	352	353	357	395	396	398	402	442	443	445	449
		Amps	7.3	7.3	7.3	7.4	8.4	8.4	8.3	8.4	9.6	9.5	9.5	9.6	10.8	10.8	10.8	10.9	12.3	12.3	12.2	12.3	13.9	13.9	13.9	14.0
		KW	2.02	2.02	2.02	2.03	2.27	2.26	2.26	2.28	2.54	2.54	2.53	2.55	2.83	2.83	2.83	2.84	3.16	3.16	3.15	3.17	3.55	3.54	3.54	3.56

IDB = Entering Indoor Dry Bulb Temperature

Shaded area reflects ACCA (TVA) conditions

Amps = outdoor unit amps (comp.+fan)

High and low pressures are measured at the liquid and suction service valves.

kW = Total system power

Expanded Cooling Data — DX16TC0601C*+CA*F4961*6D*+EEP+TXV - Low Stage

			Outdoor Ambient Temperature																							
			65ºF				75ºF				85ºF				95ºF				105ºF				115ºF			
			Entering Indoor Wet Bulb Temperature																							
IDB	Airflow		59	63	67	71	59	63	67	71	59	63	67	71	59	63	67	71	59	63	67	71	59	63	67	71
80	1150	MBh	41.7	42.3	43.5	45.4	41.3	41.9	43.1	45.0	40.2	40.8	42.0	43.9	38.4	39.0	40.2	42.1	36.1	36.7	37.9	39.8	34.0	34.6	35.9	37.7
		S/T	0.84	0.76	0.64	0.50	1.00	0.77	0.64	0.51	1.00	0.79	0.67	0.53	1.00	0.81	0.68	0.55	1.00	0.83	0.70	0.57	1.00	1.00	0.75	0.62
		ΔT	31	29	25	21	31	29	25	21	31	29	25	21	31	29	25	21	31	29	25	21	32	30	26	22
		Lo PR	117	118	121	126	124	125	128	133	130	132	134	139	135	137	140	145	140	142	145	150	147	148	151	156
		Hi PR	232	233	235	239	269	270	271	275	307	308	309	313	348	349	351	355	392	393	395	399	440	441	442	446
		Amps	7.2	7.2	7.2	7.3	8.3	8.3	8.3	8.4	9.5	9.5	9.5	9.5	10.8	10.8	10.7	10.8	12.2	12.2	12.2	12.2	13.9	13.9	13.8	13.9
		KW	2.00	2.00	2.00	2.02	2.25	2.25	2.24	2.26	2.52	2.52	2.51	2.53	2.82	2.81	2.81	2.83	3.14	3.14	3.14	3.16	3.53	3.53	3.52	3.54
	1250	MBh	42.0	42.6	43.9	45.7	41.7	42.3	43.5	45.4	40.6	41.2	42.4	44.3	38.7	39.3	**40.6**	42.4	36.5	37.1	38.3	40.2	34.4	35.0	36.2	38.1
		S/T	0.87	0.80	0.67	0.53	1.00	0.80	0.68	0.54	1.00	0.83	0.70	0.56	1.00	0.85	**0.72**	0.58	1.00	0.87	0.74	0.60	1.00	1.00	0.79	0.65
		ΔT	30	28	24	20	30	28	24	20	31	28	25	21	30	28	**24**	20	30	28	24	20	31	29	25	21
		Lo PR	118	119	122	127	125	126	129	134	131	133	136	140	136	138	**141**	146	142	143	146	151	148	149	152	157
		Hi PR	233	234	236	240	270	271	273	277	308	309	311	315	349	350	**352**	356	393	394	396	400	441	442	443	447
		Amps	7.3	7.3	7.2	7.3	8.3	8.3	8.3	8.4	9.5	9.5	9.5	9.6	10.8	10.8	**10.8**	10.9	12.2	12.2	12.2	12.3	13.9	13.9	13.9	14.0
		KW	2.01	2.01	2.01	2.03	2.26	2.25	2.25	2.27	2.53	2.53	2.52	2.54	2.82	2.82	**2.82**	2.84	3.15	3.15	3.15	3.16	3.54	3.54	3.53	3.55
	1400	MBh	42.7	43.2	44.5	46.4	42.3	42.9	44.1	46.0	41.2	41.8	43.0	44.9	39.4	39.9	41.2	43.1	37.1	37.7	38.9	40.8	35.0	35.6	36.8	38.7
		S/T	0.90	0.83	0.70	0.57	1.00	0.83	0.71	0.57	1.00	0.86	0.73	0.59	1.00	0.88	0.75	0.61	1.00	0.90	0.77	0.63	1.00	1.00	0.82	0.68
		ΔT	29	27	23	19	29	27	23	19	30	27	24	20	29	27	23	19	29	27	23	19	30	28	24	20
		Lo PR	120	121	124	129	127	128	131	136	133	134	137	142	138	140	143	148	143	145	148	153	150	151	154	159
		Hi PR	235	236	238	242	272	273	274	278	310	311	313	317	351	352	354	358	395	396	398	402	443	444	445	449
		Amps	7.3	7.3	7.3	7.4	8.4	8.4	8.4	8.4	9.6	9.6	9.5	9.6	10.8	10.8	10.8	10.9	12.3	12.3	12.2	12.3	13.9	13.9	13.9	14.0
		KW	2.02	2.02	2.02	2.04	2.27	2.26	2.26	2.28	2.54	2.54	2.53	2.55	2.83	2.83	2.83	2.85	3.16	3.16	3.16	3.17	3.55	3.55	3.54	3.56
85	1150	MBh	42.4	43.0	44.2	46.1	42.0	42.6	43.8	45.7	40.9	41.5	42.7	44.6	39.1	39.7	40.9	42.8	36.8	37.4	38.6	40.5	34.7	35.3	36.6	38.4
		S/T	1.00	0.86	0.73	0.60	1.00	0.87	0.74	0.60	1.00	0.89	0.76	0.63	1.00	1.00	0.78	0.64	1.00	1.00	0.80	0.67	1.00	1.00	0.85	0.71
		ΔT	35	33	29	25	35	33	29	25	35	33	29	25	35	33	29	25	35	33	29	25	36	34	30	26
		Lo PR	119	120	123	128	126	127	130	135	132	133	136	141	137	138	141	146	142	144	147	151	149	150	153	158
		Hi PR	233	234	236	240	270	271	272	276	308	309	311	315	349	350	352	356	393	394	396	400	441	442	443	447
		Amps	7.3	7.3	7.2	7.3	8.3	8.3	8.3	8.4	9.5	9.5	9.5	9.6	10.8	10.8	10.8	10.8	12.2	12.2	12.2	12.3	13.9	13.9	13.9	13.9
		KW	2.01	2.01	2.00	2.02	2.25	2.25	2.25	2.27	2.53	2.52	2.52	2.54	2.82	2.82	2.81	2.83	3.15	3.15	3.14	3.16	3.53	3.53	3.53	3.55
	1250	MBh	42.7	43.3	44.5	46.4	42.4	42.9	44.2	46.1	41.3	41.9	43.1	45.0	39.4	40.0	41.2	43.1	37.2	37.8	39.0	40.9	35.1	35.7	36.9	38.8
		S/T	1.00	0.89	0.76	0.63	1.00	0.90	0.77	0.64	1.00	0.92	0.79	0.66	1.00	1.00	0.81	0.68	1.00	1.00	0.83	0.70	1.00	1.00	0.88	0.75
		ΔT	34	32	28	24	34	32	28	24	35	33	29	25	34	32	28	24	34	32	28	24	35	33	29	25
		Lo PR	120	121	124	129	127	128	131	136	133	134	137	142	138	140	143	147	143	145	148	153	150	151	154	159
		Hi PR	235	236	237	241	271	272	274	278	309	310	312	316	350	351	353	357	395	396	397	401	442	443	444	449
		Amps	7.3	7.3	7.3	7.3	8.4	8.3	8.3	8.4	9.5	9.5	9.5	9.6	10.8	10.8	10.8	10.9	12.2	12.2	12.2	12.3	13.9	13.9	13.9	14.0
		KW	2.02	2.02	2.01	2.03	2.26	2.26	2.25	2.27	2.53	2.53	2.53	2.55	2.83	2.83	2.82	2.84	3.16	3.15	3.15	3.17	3.54	3.54	3.54	3.56
	1400	MBh	43.4	43.9	45.2	47.1	43.0	43.6	44.8	46.7	41.9	42.5	43.7	45.6	40.1	40.6	41.9	43.8	37.8	38.4	39.6	41.5	35.7	36.3	37.5	39.4
		S/T	1.00	0.92	0.80	0.66	1.00	0.93	0.80	0.67	1.00	1.00	0.83	0.69	1.00	1.00	0.84	0.71	1.00	1.00	0.86	0.73	1.00	1.00	0.91	0.78
		ΔT	33	31	27	23	33	31	27	23	34	32	28	24	33	31	27	23	33	31	27	23	34	32	28	24
		Lo PR	122	123	126	131	129	130	133	138	135	136	139	144	140	141	144	149	145	146	149	154	151	153	156	161
		Hi PR	236	237	239	243	273	274	275	279	311	312	314	318	352	353	355	359	396	397	399	403	444	445	446	450
		Amps	7.3	7.3	7.3	7.4	8.4	8.4	8.4	8.5	9.6	9.6	9.6	9.6	10.9	10.9	10.8	10.9	12.3	12.3	12.3	12.3	14.0	14.0	13.9	14.0
		KW	2.03	2.03	2.02	2.04	2.27	2.27	2.27	2.28	2.54	2.54	2.54	2.56	2.84	2.84	2.83	2.85	3.17	3.16	3.16	3.18	3.55	3.55	3.55	3.57

IDB = Entering Indoor Dry Bulb Temperature

Shaded area reflects AHRI (TVA) conditions

Amps = outdoor unit amps (comp.+fan)

High and low pressures are measured at the liquid and suction service valves.

kW = Total system power

All AHRI system ratings are accessible in the Unitary Matchup Tool via Daikin City or in the Daikin System Configurator tool via PartnerLink.

ECN	REV	ZONE	DESCRIPTION	CHK	D	DATE
XXXXXXX	A	XXXXX		-	GL	

MODEL	DIMENSIONS		
	W"	D"	H"
DX16TC0241C*	29¼	29¼	32½
DX16TC0361C*	35¾	35¾	36½
DX16TC0481C*	35¾	35¾	37
DX16TC0601C*	35¾	35¾	42¼

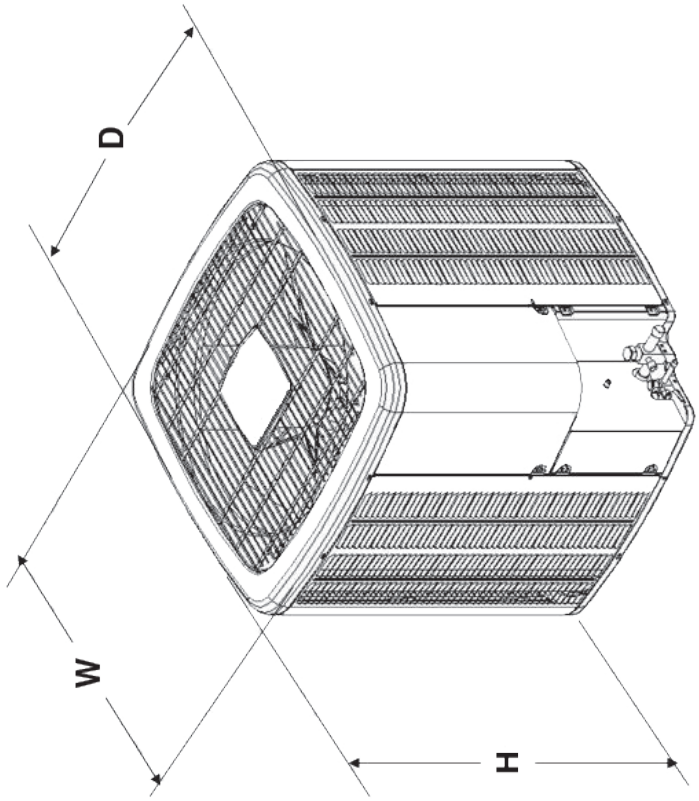

Daikin Manufacturing Co., LP

DX16TC

DRAWING TO BE INTERPRETED IN ACCORDANCE WITH ASME Y14.100

DIMENSIONS ARE IN INCHES UNLESS OTHERWISE NOTED

TOLERANCES:
ANGLES ± 1.5°
.X ± .1 .XX ± .03
.XXX ± .015
HOLE Ø ± .005
TUBE CUT LG ± .063

DWN BY: ENG:

DO NOT SCALE DRAWING

SHT 1 OF 1

REV A

COMPONENTS AND MATERIALS SPECIFIED HEREIN WILL ALSO CONFORM TO THE APPLICABLE SECTION OF GOODMAN MSP 824.01 WORKMANSHIP STANDARD FOR FIT, FEEL AND FINISH.

CONFIDENTIAL PROPERTY OF THE GOODMAN MANUFACTURING COMPANY, LP. NOT TO BE DISCLOSED TO OTHERS, COPIED, OR USED FOR ANY PURPOSE EXCEPT AS AUTHORIZED IN WRITING. MUST BE RETURNED UPON DEMAND, ON COMPLETION OF ORDER, OR OTHER PURPOSE FOR WHICH IT WAS LENT.

SPECIAL CHARACTERISTICS:

6σ = 6SIGMA

CC CRITICAL CHARACTERISTIC

SC SIGNIFICANT CHARACTERISTIC

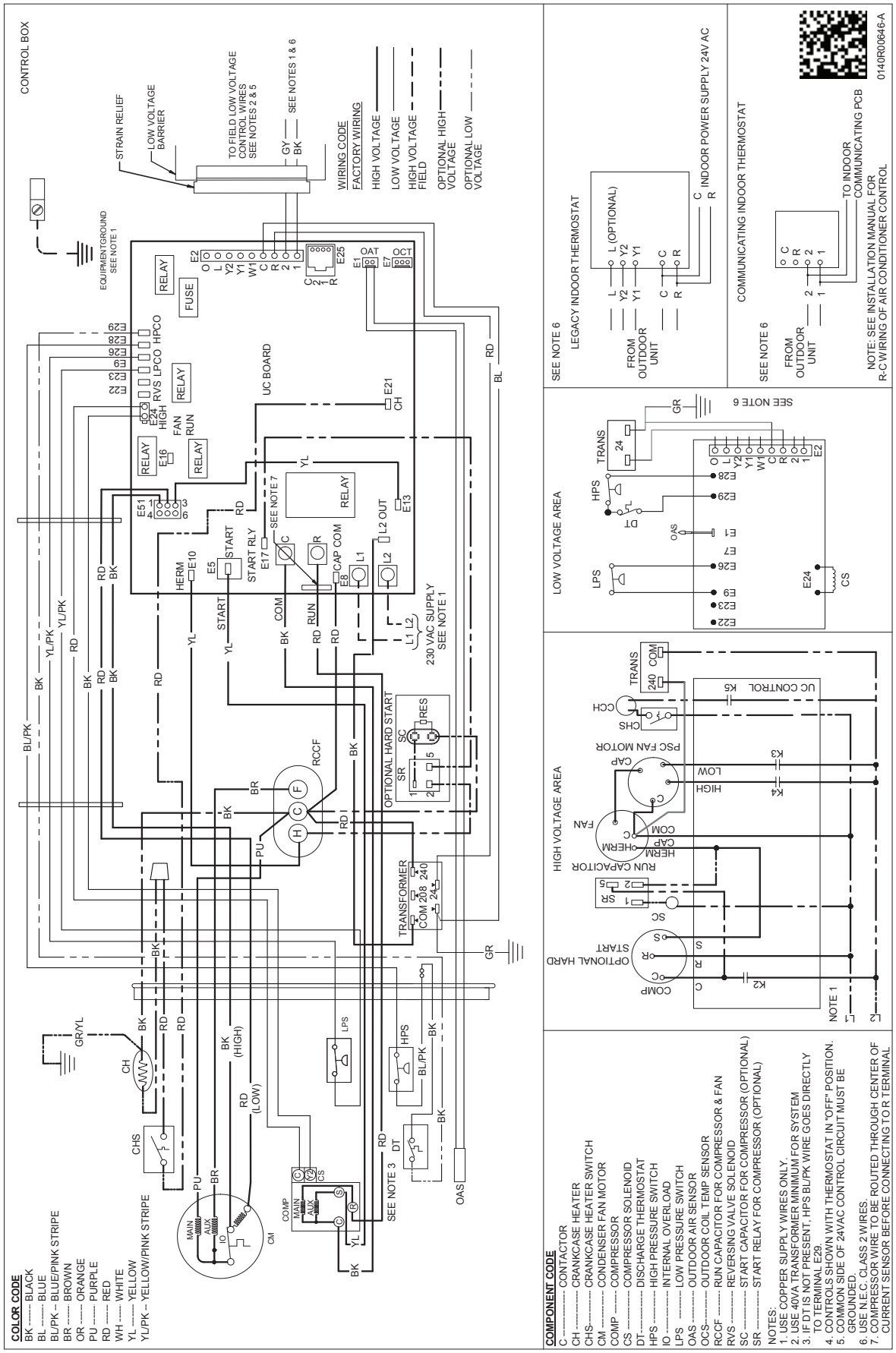

WARNING

High Voltage: Disconnect all power before servicing or installing this unit. Multiple power sources may be present. Failure to do so may cause property damage, personal injury, or death.

Wiring is subject to change. Always refer to the wiring diagram on the unit for the most up-to-date wiring.

Model	Description	DX16TC 024**	DX16TC 036**	DX16TC 048**	DX16TC 060**
ABK-20	Anchor Bracket Kit^	X	X	X	X
ASC-01	Anti-Short Cycle Kit	X	X	X	X
B1141643[1]	24V Transformer	X	X	X	X
CSR-U-1	Hard-start Kit	X	X	X	
CSR-U-2	Hard-start Kit		X		
CSR-U-3	Hard-start Kit				X
FSK01A[2]	Freeze Protection Kit	X	X	X	X
LSK02A	Liquid Line Solenoid Valve	X	X	X	X
OT18-60A[3]	Outdoor Thermostat/Lockout Thermostat	X	X	X	X
TX2N4	TXV Kit				
TX2N4A	TXV Kit	X			
TX3N4[4]	TXV Kit		X		
TX5N4	TXV Kit			X	X

^ Contains 20 brackets; four brackets needed to anchor unit to pad
[1] This component is included in the CTK01AA communicating thermostat kit.
[2] Installed on indoor coil
[3] Available in 24V legacy mode only. This feature is integrated in the communicating mode.
Note: Maximum number of installed accessories at the same time is limited by the size of the unit's control box.

Our continuing commitment to quality products may mean a change in specifications without notice.
©2019 **DAIKIN MANUFACTURING COMPANY, L.P.** • Houston, Texas • Printed in the USA