DAIKIN

NEXIO MAX

R-32 High-Efficiency Heat Pump Direct-Drive Packaged Rooftop Unit DVH Commercial 7.5 - 10 Nominal Tons

7.5-10 TON / Up To 22 IEER / Up To 12.4 EER

5 YEAR PARTS LIMITED WARRANTY*

C ETL LISTED US Intertek

AHRI CERTIFIED www.ahridirectory.org Unitary Small AC AHRI Standard 210/240

ISO 9001 QUALITY MANAGEMENT SYSTEM GLOBAL QUALITY STANDARDS

ISO 14001 CERTIFIED ENVIRONMENTAL MANAGEMENT SYSTEM

R32

*Complete warranty details available from your local distributor or manufacturer's representative or at www.daikincomfort.com

Supersedes 05/26

Our Perfect Package:

Harnessing energy-efficient performance, proven technology, and enhanced comfort for life.

Since becoming the first company in Japan to manufacture packaged air conditioning systems, in 1951, Daikin has supported comfortable indoor living based on the strengths and technologies that have led to the growth of the company becoming one of the world's largest manufacturers of HVAC products, systems and refrigerants.

Today, as a comprehensive global manufacturer of HVAC products and systems, the Daikin brand is committed to being recognized as a truly global and excellent company capable of continually creating new value for its customers. The company plans to pursue sustainable growth and foster business operations that consistently harmonize with the goals of improving indoor comfort.

The group philosophy of the company includes:

- Creating new value continuously for customers
- Developing world leading energy-saving technology
- Being a flexible and dynamic organization
- Allowing employees to be the driving force for the success of the company
- Fostering an atmosphere of best practices, boldness, and innovation
- Thinking and acting globally

Contents

2	**Introduction**	2
4	**Nomenclature**	4
5	**Features and Benefits**	5
	Applications	8
	Serviceability	8
9	**Product Specifications**	9
	Coil Dimensions	11
	AHRI Ratings	11
	Sound Data	12
13	**Dimensional Data**	13
15	**Expanded Cooling Data**	15
42	**Electric Heating Data**	42
43	**Airflow**	43
51	**Expanding Heating Data**	51
60	**Static Pressure**	60
61	**Electrical Data**	61
64	**Wiring Diagrams**	64
65	**Electrical Connections**	65
	Unit Clearances	65
66	**Installation**	67
	Weights	67

For details on accessories refer to document **PM-LC-ACCESSORIES**

DAIKIN

Nomenclature

D	V	H	120	3	S	400	C	A	A	X	X	X	X	X	X	X	X	A	*
1	2	3	4,5,6	7	8	9,10,11	12	13	14	15	16	17	18	19	20	21	22	23	24

Brand
D Daikin

Configuration
S R-32 Standard Efficiency
H R-32 High Efficiency
V Inverter (variable speed compressor)

Application
C Cooling
G Gas Heat
H Heat Pump

Nominal Cooling Capacity

036	3 Tons	090	7½ Tons	180	15 Tons
048	4 Tons	102	8½ Tons	240	20 Tons
060	5 Tons	120	10 Tons	300	25 Tons
072	6 Tons	150	12½ tons		

Voltage

1	208-230/1/60	4	460/3/60
3	208-230/3/60	7	575/3/60

Supply Fan/Drive Type/Motor
D Direct Drive - Standard Static
L Direct Drive -Medium Static
W Direct Drive - High Static

Nominal Heating Capacity

Gas/Electric		A/C H/P Factory-Installed Electric Heat	
045	45,000 BTU/h	XXX	No Heat
060	60,000 BTU/h	005	5kW
070	70,000 BTU/h	010	10 kW
080	80,000 BTU/h	015	15 kW
090	90,000 BTU/h	020	20 kW
100	100,000 BTU/h	030	30 kW
115	115,000 BTU/h	045	45 kW
125	125,000 BTU/h	060	60 kW
130	130,000 BTU/h	075	75kW
140	140,000 BTU/h		
150	150,000 BTU/h	**Electric Heat w/ SCR controls**	
180	180,000 BTU/h	S05	5kW
210	210,000 BTU/h	S10	10 kW
225	225,000 BTU/h	S20	20 kW
240	240,000 BTU/h	S22	20 kW
260	260,000 BTU/h	S25	25 kW
350	350,000 BTU/h		
360	360,000 BTU/h		
400	400,000 BTU/h		
480	480,000 BTU/h		

S30	30 kW
S45	45 kW
S60	60 kW
S75	75kW

See product specifications for heat size(s) available for each capacity.

Refrigeration Systems
A Single stage cooling modes
C Two stage cooling modes
F Two stage cooling modes with Hot Gas Reheat and Low-ambient control
G Single stage cooling mode with Low-ambient controller
H Two stage cooling mode with Low-ambient controller
I Inverter (variable speed compressor)
J Inverter hot gas reheat (variable speed compressor)

Heat Exchanger
X No options
A Standard Aluminized Exchanger
S Stainless Steel Exchanger
U Ultra Low No_x

Controls
A Electromechanical controls
B DDC w/ BACnet interface
I Inverter with Single-Zone Variable Air Volume (SZ VAV)
M Inverter with Multi-Zone Variable Air Volume (MZ VAV)
D Inverter with DKN+ (SZ VAV)
E Inverter with DKN+ (3rd Party Thermostat)

Sensors
D R-32 Sensor
E RA Smoke Detector w/ R32 Sensor
F SA Smoke Detector w/ R32 Sensor
G RA & SA Smoke Detector w/ R32 Sensor

Coils, Hail guard
X No Options
C Hail Guard

Economizer
X No Options
A Ultra Low-Leak Downflow Economizer w/ Enthalpy Sensor
C Ultra Low-Leak Internal Horizontal Economizer w/ Enthalpy Sensor
E Ultra Low-Leak Downflow Economizer for DDC controls w/ Enthalpy Sensor
F Ultra Low-Leak Horizontal Economizer for DDC controls w/ Enthalpy Sensor
G Ultra Low-Leak Downflow Economizer w/ Dry Bulb Sensor
J Ultra Low-Leak Internal Horizontal Economizer w/ Dry Bulb Sensor
L Ultra Low-Leak Downflow Economizer for DDC controls w/ Dry Bulb Sensor
M Ultra Low-Leak Horizontal Economizer for DDC controls w/ Dry Bulb Sensor

Electrical
X No Options
A Non-Fused Disconnect
B Phase Monitor
C Thru-the-base connections
D SCCR
E Non-Fused Disconnect and Phase Monitor
F Non-Fused Disconnect and Thru-the-base connectons
G Non-Fused Disconnect and SCCR
H Phase Monitor and Thru-the-base connections
J Phase Monitor and SCCR
K Thru-the-base connections and SCCR
L Non-Fused Disconnect, Thru-the-base connectons and Phase Monitor
M Non-Fused Disconnect, Phase Monitor and SCCR
N Non-Fused Disconnect, Thru-the-base connectons and SCCR
P Phase Monitor, Thru-the-base connections and SCCR
Q Non-Fused Disconnect, Thru-the-base connectons, Phase Monitor and SCCR

Service Options
A Powered convenience outlet
B Non-powered convenience outlet
C Hinge Panels
D Hinged Panels and Powered convenience outlet
E Hinged Panels and non-powered convenience outlet
X No Options

IAQ
X No Options

PE Connection
X No Options
B Single point power connection for Power Exhaust
T Single point power connection for Power Exhaust (w/ Transformer)

X No Options

Revision Levels
Major & Minor

HP Stocking Models

Model Number	Code String
DVH0903D000001S	DVH0903DXXXIXIXXXXXXXX
DVH0904D000001S	DVH0904DXXXIXIXXXXXXXX
DVH1023D000001S	DVH1023DXXXIXIXXXXXXXX
DVH1024D000001S	DVH1024DXXXIXIXXXXXXXX
DVH1203D000001S	DVH1203DXXXIXIXXXXXXXX
DVH1204D000001S	DVH1204DXXXIXIXXXXXXXX
DVH0903W000001F	DVH0903WXXXIXIXXXXXXXX
DVH0904W000001F	DVH0904WXXXIXIXXXXXXXX
DVH1023W000001F	DVH1023WXXXIXIXXXXXXXX
DVH1024W000001F	DVH1024WXXXIXIXXXXXXXX
DVH1203W000001F	DVH1203WXXXIXIXXXXXXXX
DVH1204W000001F	DVH1204WXXXIXIXXXXXXXX

Daikin Packaged Rooftop Units (RTUs) are built to perform, with features and options that help provide low installation and operation costs, superior indoor air quality, efficient operation, and longevity.

Installation

Daikin Packaged units are designed with fast and easy installation in mind and are ideal for both new construction and retrofit projects. Our packaged rooftop units are built to be a direct replacement for most rooftop units on the field without the need of a curb adapter, to be able to replace the unit in a shorter time and at a lower cost (compared to the previous design).

Cabinet Construction

Daikin packaged rooftop units are made with high quality galvanized steel with a powder-paint finish to provide higher corrosion resistance.

» Easy accessibility using our tool-less filter access.

» The interior surface in the indoor air section is fully insulated to prevent sweating and thermal losses, using our foil face fiberglass insulation which also omits exposed filter fibers into the airstream.

» 1" Raised flanged edges around the supply and return offer easy installation for the duct connections.

» The full perimeter base rail is built using heavy gauge galvanized steel for a stronger structural installation, the base rails are a minimum of 3 ½" tall and include holes to allow for overhead rigging and lifting with forklifts.

» Electrical lines and can be brought through the base of the unit or through the horizontal knockout for easy installation and accessibility on the field.

Compressor

High performance, low noise scroll compressors to match the required total load.

» Two-stage scroll compressor for partial load applications.

» Resiliently factory-mounted on rubber grommets for vibration isolation

» Unit is factory charged with environmentally friendly Low GWP R-32 refrigerant.

» Compressor location outside the condenser section to avoid air bypass.

» Internal overload protection included with compressor.

Supply Fan

The direct-drive with airfoil single width, single inlet (SWSI) Class II construction supply fan with aluminum fan +blades provides efficient and quiet operation at wide ranging static pressure and air flow requirements.

» Fan wheel is continuously welded to the hub plate and end rim for long lasting reliable operation.

» Direct-drive ECM motor removes the need for belts, sheaves, or bearings and its permanently lubricated motors provides low maintenance cost.

» Each fan assembly is dynamically trim balanced at the factory before shipment for quick start-up and efficient operation.

» Electromechanical integrated controls modulate the supply fan motor

» Motor with thermal overload is provided for motor long lasting operation.

Coils

All units use large face area outdoor coils. These coils are constructed with seamless copper tubes, mechanically bonded into aluminum plate-type fins with full drawn collars to completely cover the tubes for high operating efficiencies.

The indoor coil section is installed in a draw through configuration to provide better dehumidification.

» Coils are factory pressure tested to ensure pressure and leak integrity.

» Copper tube / aluminum fin coils on condenser and evaporator

» 5mm Smart Coil Technology on all condenser coils for improved performance and reduced refrigerant load.

Heat Pump Heating

Evaporator coil, condenser coil, compressors and refrigerant circuit are designed for heat pump operation.

» The refrigerant circuit contains a 4-way reversing valve to provide heat.

» The outdoor coil includes a thermal expansion valve to control the refrigerant flow during heat pump operation.

» Hybrid heating option is provided for auxiliary heating.

» The refrigerant system includes a pump-down cycle for durable operation.

Controls and Wiring

Packaged rooftop units come equipped with a well-organized, large, easy to use weatherproof internal control box with easy access, for a better user experience.

» Units are factory-wired with labeled color-coded wires and complete 24-volt electromechanical controls package.

» Units include single-point power entry as standard and also available with electric heat kits if selected.

» Terminal blocks are provided as standard for easy installation and field power wiring.

» The Daikin iLINQ Controller is a factory-installed solution to provide intelligent control for Daikin Light Commercial rooftop units* (RTUs). iLINQ provides physical inputs and outputs to control and monitor the RTU and features a graphic web interface for remote access (via a computer or tablet). Equipped with built-in BACnet™ IP and MS/TP interface or it can be used with an optional LonWorks® card that is available to integrate the Daikin RTU with building automation systems (BMS).

Filtration

Unit provides a draw-through filter section as standard for better air quality and long lasting component maintenance.

» Filters installed on the units are standard off the shelf sizes for easy replacement.

» One or two size filter per unit for low maintenance cost and easy replacement.

» Easy and fast filter service access.

Heating Section

Wide ranging of electric heat selections effectively handle most comfort heating demand from morning warm-up control to full heat.

Electric Heat

ETL approved electric heat is factory assembled, installed and tested.

» Heating control is fully integrated into the unit's control system for quick start-up and reliable control.

» Durable low watt density, nickel chromium elements provide longer life (compared to units without).

» Fuses are provided in each branch circuit to a maximum of 48 Amps per NEC requirements.

» Single-point power connection reduces installation cost.

» For operational safeties electric heat includes automatic reset, and high temperature limit safety protection and an airflow safety switch to prevent electric heat operation in the event of no airflow.

Electrical

Units are completely wired and tested at the factory to provide faster commissioning and start-up.

» Wiring complies with NEC requirements and all applicable UL standards.

» For ease of use, wiring and electrical components are number coded and labeled according to the electrical diagram.

» A 115V GFI convenience receptacle requiring independent power supply for the receptacle is optional.

» An optional unit powered 20 amp 115 V convenience receptacle, complete with factory mounted transformer, disconnect switch, and primary and secondary overload protection, eliminates the need to pull a separate 115 V power source.

» Unit includes knockouts in the bottom of the main control panels for field wiring entrance.

» A single-point power connection with power block is standard and a terminal board is provided for connecting low voltage control wiring.

» For better serviceability an optional non-fused disconnect switch can be installed inside the control panel and operated by an externally mounted handle to disconnect the electrical power at the unit.

DAIKIN

Applications

Daikin Rooftop units are intended for comfort cooling applications in normal heating, ventilating, and air conditioning. Consult your local Daikin sales representative for applications involving operations at high ambient temperatures, high altitudes, non-cataloged voltages, or for job-specific unit selections that fall outside of the range of the catalog tables.

For proper operation, units should be rigged in accordance with instructions stated on the installation manual. Fire dampers, if required, must be installed in the ductwork according to local and/or state codes. No space is allowed for these dampers in the unit.

Follow factory check, test and start procedures explicitly to achieve satisfactory start-up and operation.

Most rooftop applications take advantage of the significant energy savings provided with economizer operation. When an economizer system is used, mechanical refrigeration is typically not required below an ambient temperature of 50°F.

Serviceability

Daikin packaged rooftop units are built with serviceability in mind, designed to make future maintenance and service on the unit easy and accessible.

- Our packaged rooftop units offer a slide out blower to facilitate the access and removal of the fan.
- Filter panels on the small chassis line offer tool-less access for easy maintenance.
- Independent compressor outside of the air bypass to eliminate component blockage and provide easy access.
- Labeled field connections, color coded and continuously marked wire to identify point-to-point component connections.
- All 7.5 - 10 ton units are designed for convertible airflow orientation to serve downflow or horizontal applications. Every unit ships prepared to convert to horizontal orientation in the field if required.
- Condenser clean out from inside-out.
- Easy access to gas valves and control panel.

Model	DVH0903D000001S	DVH0904D000001S	DVH1023D000001S	DVH1024D000001S	DVH1203D000001S	DVH1204D000001S
COOLING CAPACITY						
Total BTU/H	90,000	90,000	102,000	102,000	114,000	114,000
IEER / EER	22.0/12.4	22.0/12.4	21.0/12.3	21.0/12.3	21.5/12.1	21.5/12.1
SEER2 / EER2	N/A	N/A	N/A	N/A	N/A	N/A
AHRI Reference #	218426757	218426757	218426758	218426758	218426759	218426759
EVAPORATOR MOTOR / RTPF (ROUND TUBE PLATE FIN)						
Motor Type	Direct Drive	Direct Drive	Direct Drive	Direct Drive	Direct Drive	Direct Drive
External Static Pressure (ESP)	Standard	Standard	Standard	Standard	Standard	Standard
Wheel Dia. X Width	15x12	15x12	15x12	15x12	15x12	15x12
Indoor Nominal CFM	2950	2950	3100	3100	3600	3600
RPM	300-1600	300-1600	300-1600	300-1600	300-1600	300-1600
Indoor Horsepower	3.5	3.5	3.5	3.5	3.5	3.5
Filter Size (in)	20 X 25 X 2 (2) 25 X 25 X 2 (2)	20 X 25 X 2 (2) 25 X 25 X 2 (2)	20 X 25 X 2 (2) 25 X 25 X 2 (2)	20 X 25 X 2 (2) 25 X 25 X 2 (2)	20 X 25 X 2 (2) 25 X 25 X 2 (2)	20 X 25 X 2 (2) 25 X 25 X 2 (2)
Drain Size (NPT)	3/4	3/4	3/4	3/4	3/4	3/4
R-32 Refrigerant Charge (oz.)	335	335	335	335	335	335
Evaporator Coil Face Area (ft^2)	16.6	16.6	16.6	16.6	16.6	16.6
Rows Deep/ Fins per Inch	$^4/_{16}$	$^4/_{16}$	$^4/_{16}$	$^4/_{16}$	$^4/_{16}$	$^4/_{16}$
CONDENSER FAN / RTPF (ROUND TUBE PLATE FIN)						
Quantity of Condenser Fan Motors	2	2	2	2	2	2
RPM (max-min)	1324-200	1324-200	1324-200	1324-200	1324-200	1324-200
Outdoor Horsepower	7/8	7/8	7/8	7/8	7/8	7/8
Fan Diameter/ # Fan Blades	21.3 / 3	21.3 / 3	21.3 / 3	21.3 / 3	21.3 / 3	21.3 / 3
Face Area (ft^2)	27.0	27.0	27.0	27.0	27.0	27.0
Rows Deep / Fins per Inch	$^3/_{16}$	$^3/_{16}$	$^3/_{16}$	$^3/_{16}$	$^3/_{16}$	$^3/_{16}$
COMPRESSOR						
Quantity / Type / Stages	1/ Scroll / Inverter	1/ Scroll / Inverter	1/ Scroll / Inverter	1/ Scroll / Inverter	1/ Scroll / Inverter	1/ Scroll / Inverter
ELECTRICAL DATA						
Voltage-Phase-Frequency	208/230-3-60	460-3-60	208/230-3-60	460-3-60	208/230-3-60	460-3-60
Inverter Drive Input (Compressor(s) and Condensor fan(s))	27.3/24.7	12.0	32.1/29.2	14.2	32.7/29.6	14.5
Indoor Blower FLA	11.7	7.2	11.7	7.2	11.7	7.2
Max External Static (In. W.C.)	1.4	1.4	1.4	1.4	1.4	1.4
Min. Circuit Ampacity[1]	49.9/49.9	24.8	52.7/52.7	26.0	54.0/54.0	26.5
Max. Overcurrent Protection (A)[2]	60/60	30	60/60	30	70/70	35
Power Supply Conduit Hole Dia. (in)	1.375	1.375	1.375	1.375	1.375	1.375
Low-Voltage Conduit Hole Dia. (in)	0.5	0.5	0.5	0.5	0.5	0.5
OPERATING WEIGHT (LBS.)						
Operating Weight (lbs)	1293	1293	1293	1293	1293	1293
SHIPPING WEIGHT (LBS.)						
Ship Weight (lbs)	1365	1365	1365	1365	1365	1365

[1] Wire size should be determined in accordance with National Electrical Codes. Extensive wire runs will require larger wire sizes.
[2] May use fuses or HACR-type circuit breakers of the same size as noted.
Note: Always check the S&R plate for electrical data on the unit being installed.

Model	DVH0903W000001S	DVH0904W000001S	DVH1023W000001S	DVH1024W000001S	DVH1203W000001S	DVH1204W000001S
COOLING CAPACITY						
Total BTU/H	90,000	90,000	102,000	102,000	114,000	114,000
IEER / EER	22.0/12.4	22.0/12.4	21.0/12.3	21.0/12.3	21.5/12.1	21.5/12.1
SEER2 / EER2	N/A	N/A	N/A	N/A	N/A	N/A
AHRI Reference #	218426757	218426757	218426758	218426758	218426759	218426759
EVAPORATOR MOTOR / RTPF (ROUND TUBE PLATE FIN)						
Motor Type	Direct Drive	Direct Drive	Direct Drive	Direct Drive	Direct Drive	Direct Drive
External Static Pressure (ESP)	High	High	High	High	High	High
Wheel Dia. X Width	15x12	15x12	15x12	15x12	15x12	15x12
Indoor Nominal CFM	2950	2950	3100	3100	3600	3600
RPM	300-1600	300-1600	300-1600	300-1600	300-1600	300-1600
Indoor Horsepower	3.5	3.5	5.0	5.0	5.0	5.0
Filter Size (in)	20 X 25 X 2 (2) 25 X 25 X 2 (2)	20 X 25 X 2 (2) 25 X 25 X 2 (2)	20 X 25 X 2 (2) 25 X 25 X 2 (2)	20 X 25 X 2 (2) 25 X 25 X 2 (2)	20 X 25 X 2 (2) 25 X 25 X 2 (2)	20 X 25 X 2 (2) 25 X 25 X 2 (2)
Drain Size (NPT)	3/4	3/4	3/4	3/4	3/4	3/4
R-32 Refrigerant Charge (oz.)	335	335	335	335	335	335
Evaporator Coil Face Area (ft^2)	16.6	16.6	16.6	16.6	16.6	16.6
Rows Deep/ Fins per Inch	$^4/_{16}$	$^4/_{16}$	$^4/_{16}$	$^4/_{16}$	$^4/_{16}$	$^4/_{16}$
CONDENSER FAN / RTPF (ROUND TUBE PLATE FIN)						
Quantity of Condenser Fan Motors	2	2	2	2	2	2
RPM (max-min)	1324-200	1324-200	1324-200	1324-200	1324-200	1324-200
Outdoor Horsepower	7/8	7/8	7/8	7/8	7/8	7/8
Fan Diameter/ # Fan Blades	21.3 / 3	21.3 / 3	21.3 / 3	21.3 / 3	21.3 / 3	21.3 / 3
Face Area (ft^2)	27.0	27.0	27.0	27.0	27.0	27.0
Rows Deep / Fins per Inch	$^3/_{16}$	$^3/_{16}$	$^3/_{16}$	$^3/_{16}$	$^3/_{16}$	$^3/_{16}$
COMPRESSOR						
Quantity / Type / Stages	1/ Scroll / Inverter	1/ Scroll / Inverter	1/ Scroll / Inverter	1/ Scroll / Inverter	1/ Scroll / Inverter	1/ Scroll / Inverter
ELECTRICAL DATA						
Voltage-Phase-Frequency	208/230-3-60	460-3-60	208/230-3-60	460-3-60	208/230-3-60	460-3-60
Inverter Drive Input (Compressor(s) and Condensor fan(s))	27.3/24.7	12.0	32.1/29.2	14.2	32.7/29.6	14.5
Indoor Blower FLA	11.7	7.2	15.1	10.6	15.1	10.6
Max External Static (In. W.C.)	2.0	2.0	2.0	2.0	2.0	2.0
Min. Circuit Ampacity[1]	49.9/49.9	24.8	56.5/56.5	29.7	57.8/57.8	30.3
Max. Overcurrent Protection (A)[2]	60/60	30	70/70	35	70/70	35
Power Supply Conduit Hole Dia. (in)	1.375	1.375	1.375	1.375	1.375	1.375
Low-Voltage Conduit Hole Dia. (in)	0.5	0.5	0.5	0.5	0.5	0.5
OPERATING WEIGHT (LBS.)						
Operating Weight (lbs)	1293	1293	1293	1293	1293	1293
SHIPPING WEIGHT (LBS.)						
Ship Weight (lbs)	1365	1365	1365	1365	1365	1365

[1] Wire size should be determined in accordance with National Electrical Codes. Extensive wire runs will require larger wire sizes.
[2] May use fuses or HACR-type circuit breakers of the same size as noted.
Note: Always check the S&R plate for electrical data on the unit being installed.

AHRI Ratings

MODEL	CAPACITY	EER	IEER	47 Capacity	47 COP	17 Capacity	17 COP
DVH0903D	90,000	12.4	22	90,000	3.85	63,000	2.5
DVH0904D	90,000	12.4	22	90,000	3.85	63,000	2.5
DVH1023D	102,000	12.3	21	102,000	3.85	72,000	2.5
DVH1024D	102,000	12.3	21	102,000	3.85	72,000	2.5
DVH1203D	114,000	12.1	21.5	114,000	3.74	80,000	2.5
DVH1204D	114,000	12.1	21.5	114,000	3.74	80,000	2.5

Coil Dimensions

Model	Fin height in.	Fin length in.	Area (Ft^2)	Fin height in.	Fin length in.	Area (Ft^2)
7.5	45.0	53.1	16.6	48.5	80.1	27.0
8.5	45.0	53.1	16.6	48.5	80.1	27.0
10	45.0	53.1	16.6	48.5	80.1	27.0

Sound Data

STATIC PRESSURE	7.5 TON SOUND (DB) AT 60 HZ										
	INDOOR CFM	COMPONET	A-WEIGHTED	63	125	250	500	1000	2000	4000	8000
0.8	3,000	Discharge	74.5	86.9	81.5	66.4	68.7	69.1	67.0	65.2	59.0
		Inlet	65.9	85.9	79.1	65.7	60.1	56.7	50.9	48.1	42.1
1.4		Discharge	78.6	92.5	84.6	72.3	71.6	74.3	70.9	69	63.7
		Inlet	70.1	89.6	83.2	70.6	64.5	60.9	55.6	53.3	47.9
2.0		Discharge	80.8	96.5	87.2	74.8	73.8	75.8	73.3	71	66
		Inlet	72.4	92.8	85.2	72.4	66.8	63.6	58.2	55.3	50.1
N/A	N/A	Outdoor	76.3	-	75.5	70.4	66.4	62.3	59.3	57.1	44.1

STATIC PRESSURE	8.5 TON SOUND (DB) AT 60 HZ										
	INDOOR CFM	COMPONET	A-WEIGHTED	63	125	250	500	1000	2000	4000	8000
0.8	3,400	Discharge	75.1	87.7	78.9	67.2	69.4	70.1	68.0	66.3	60.2
		Inlet	66.6	85.9	79.9	66.2	60.7	57.3	51.5	48.9	43.2
1.4		Discharge	79.1	90.1	84.1	71.7	72.2	74.8	71.7	70.0	64.9
		Inlet	71.2	89.7	84.2	72.1	65.8	62.6	56.8	54.5	49.1
2.0		Discharge	82.3	96.8	88.2	76.3	75.4	77.6	74.7	72.7	68.3
		Inlet	74.4	93.9	86.9	74.7	69.3	66.4	60.6	58.1	53.1
N/A	N/A	Outdoor	80	-	74.5	74.3	70.9	71.4	66.8	64.4	51.3

STATIC PRESSURE	10 TON SOUND (DB) AT 60 HZ										
	INDOOR CFM	COMPONET	A-WEIGHTED	63	125	250	500	1000	2000	4000	8000
0.8	4,000	Discharge	78	87.2	80.8	69.2	71.4	74.2	70.6	69.2	63.7
		Inlet	67.7	83.6	81.2	69.3	61.7	58.7	53.0	50.8	45.3
1.4		Discharge	80.4	89.6	83.6	73.0	73.3	76.4	73.1	71.5	66.7
		Inlet	71.7	90.1	84.7	73	66.4	63.1	57.5	55.5	50.3
2.0		Discharge	82.8	94	87.6	75.8	75.4	78.5	75.3	73.6	69.5
		Inlet	75.6	93.9	87.8	77	70.7	67.4	62.2	60.5	55.3
N/A	N/A	Outdoor	82.5	-	77.7	77.4	73.8	74.5	67.8	64.5	53.1

Notes:

[1] Outdoor sound data is measured in accordance with AHRI standard 230.

[2] Discharge and Inlet sound data was measured in accordanced with AHRI standard 260..

[3] Measurements expressed in terms of sound power. Do not compare these values to sound pressure values because sound pressure depends on specific environment factors which normally do not match individual applications. Sound power values are independent of the environment and therefore more accurate.

[4] A-weighted sound ratings filter out high and very low frequencies, to better approximate the response of "average"human ear. A-weighted measurements for Daikin units are taken in accordance with AHRI standards 230 and 260.

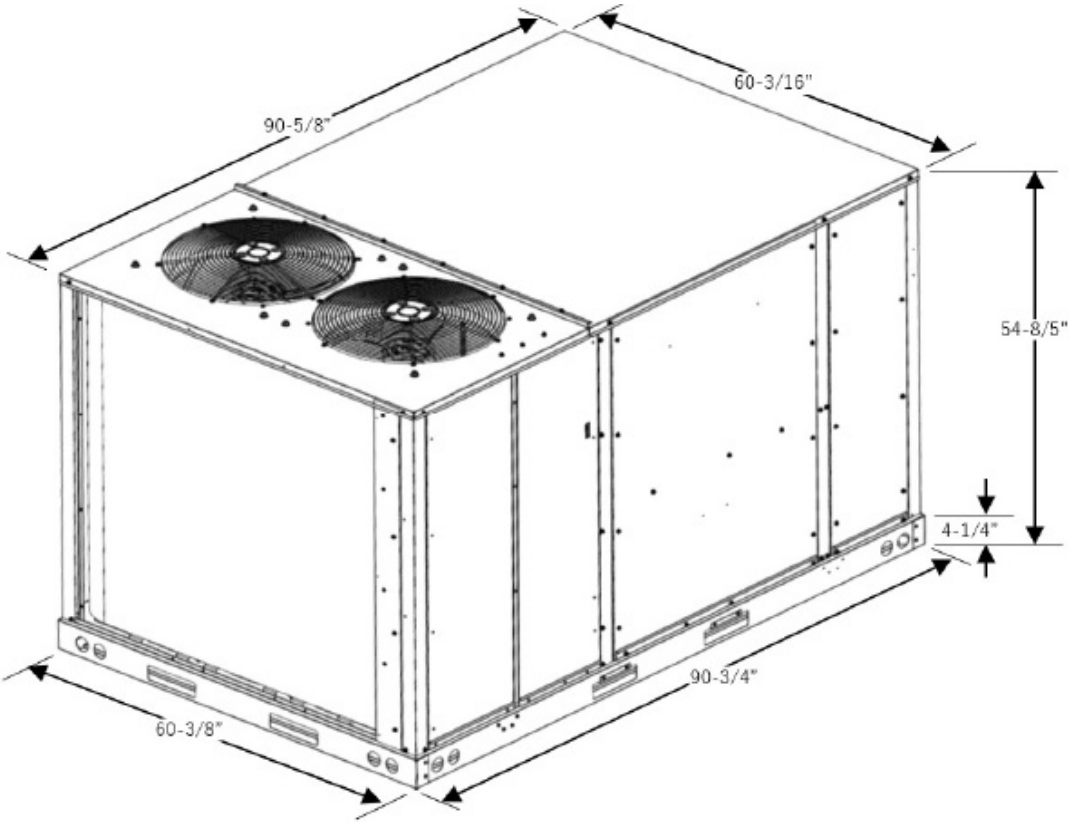
90-5/8"
60-3/16"
54-8/5"
4-1/4"
90-3/4"
60-3/8"

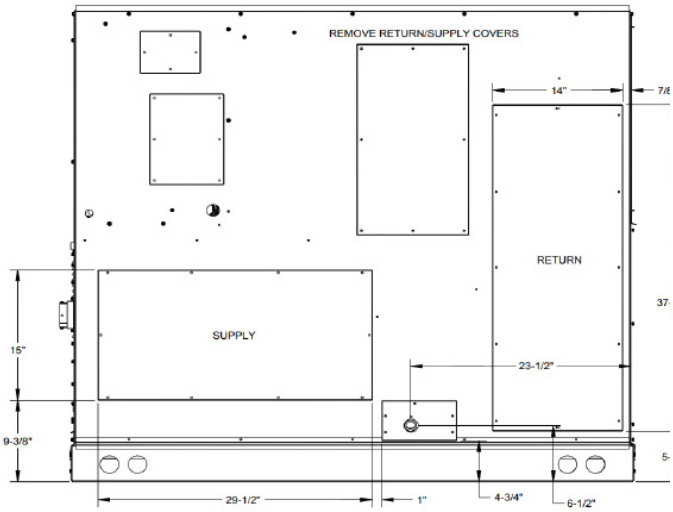
REMOVE RETURN/SUPPLY COVERS
14"
RETURN
SUPPLY
15"
23-1/2"
9-3/8"
29-1/2"
1"
4-3/4"
6-1/2"

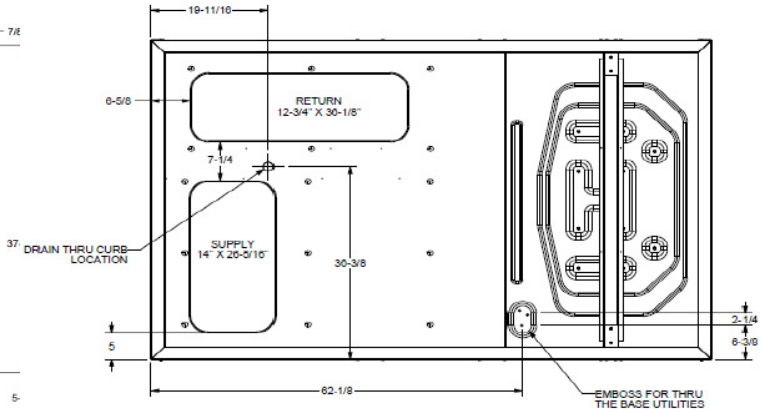
19-11/16
6-5/8
RETURN
12-3/4" X 30-1/8"
7-1/4
DRAIN THRU CURB LOCATION
SUPPLY
14" X 26-5/16"
30-3/8
5
62-1/8
2-1/4
6-3/8
EMBOSS FOR THRU THE BASE UTILITIES

Light Commercial Base Rails

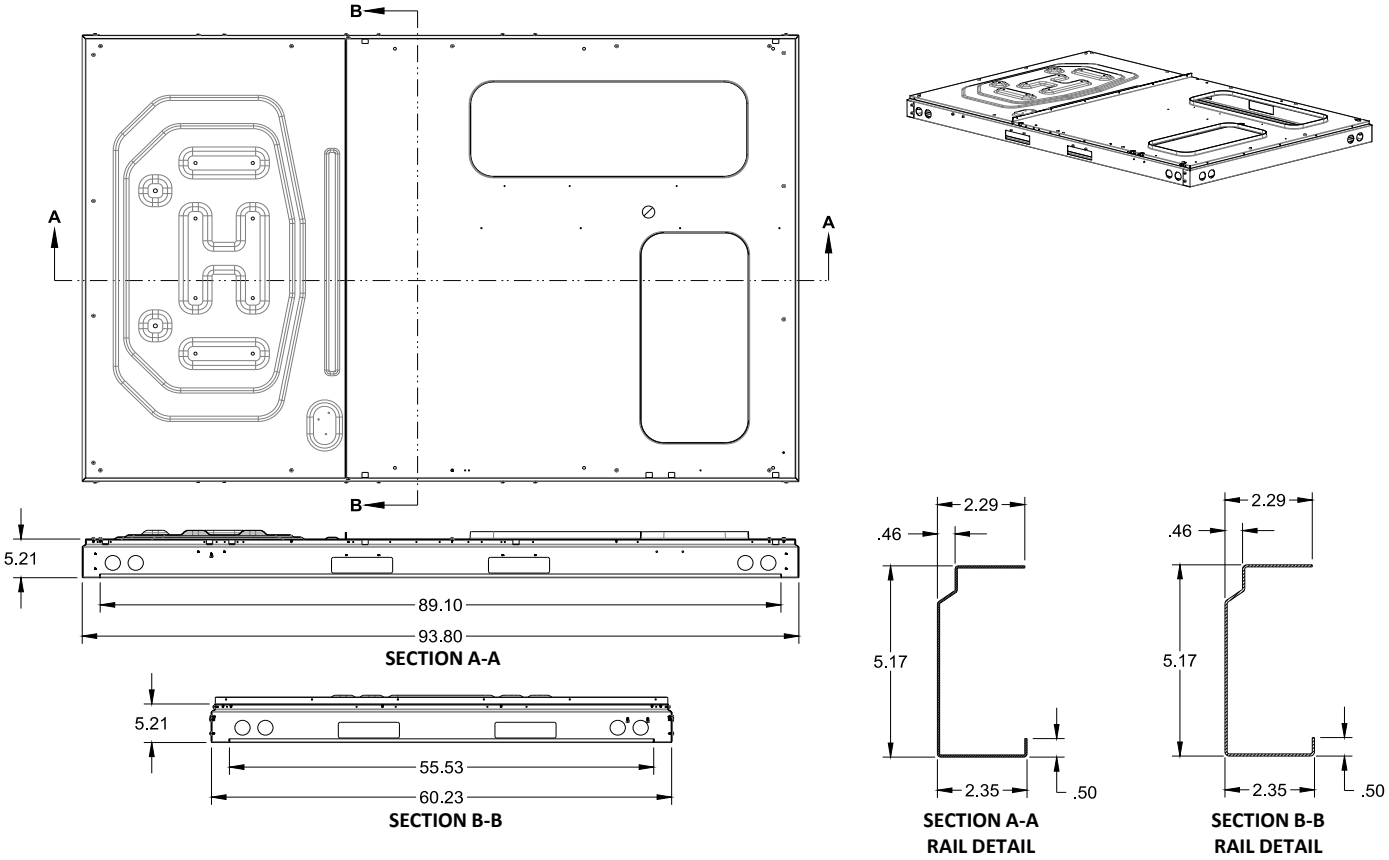

ID DB		70												75																	
ID WB		57			61			64			67			57			61			64			67			70			72		
ID CFM	OD DB	TC	SC	PI	TC	SC	PI	TC	SC	PI	TC	SC	PI	TC	SC	PI	TC	SC	PI	TC	SC	PI	TC	SC	PI	TC	SC	PI	TC	SC	PI
	23	23.0	23.0	0.54	23.0	23.0	0.54	23.6	18.1	0.53	24.8	12.6	0.52	24.8	24.8	0.52	24.8	24.8	0.52	24.8	24.8	0.52	24.9	21.5	0.52	26.3	16.1	0.50	27.3	13.2	0.46
	30	23.0	23.0	0.54	23.0	23.0	0.54	23.6	18.1	0.53	24.8	12.6	0.52	24.8	24.8	0.52	24.8	24.8	0.52	24.8	24.8	0.52	24.9	21.5	0.52	26.3	16.1	0.50	27.3	13.2	0.46
	40	23.0	23.0	0.54	23.0	23.0	0.54	23.6	18.1	0.53	24.8	12.6	0.52	24.8	24.8	0.52	24.8	24.8	0.52	24.8	24.8	0.52	24.9	21.5	0.52	26.3	16.1	0.50	27.3	13.2	0.46
	50	23.0	23.0	0.54	23.0	23.0	0.54	23.6	18.1	0.53	24.8	12.6	0.52	24.8	24.8	0.52	24.8	24.8	0.52	24.8	24.8	0.52	24.9	21.5	0.52	26.3	16.1	0.51	27.3	13.2	0.46
	54	23.0	23.0	0.54	23.0	23.0	0.54	23.5	18.0	0.53	24.8	12.6	0.52	24.8	24.8	0.52	24.8	24.8	0.52	24.8	24.8	0.52	24.9	21.5	0.52	26.3	16.1	0.51	27.3	13.2	0.46
	58	23.0	23.0	0.54	23.0	23.0	0.54	23.5	18.0	0.53	24.8	12.6	0.52	24.8	24.8	0.52	24.8	24.8	0.52	24.8	24.8	0.52	24.9	21.5	0.52	26.3	16.1	0.51	27.3	13.2	0.46
	62	23.0	23.0	0.54	23.0	23.0	0.54	23.5	18.0	0.53	24.8	12.6	0.52	24.8	24.8	0.52	24.8	24.8	0.52	24.8	24.8	0.52	24.9	21.5	0.52	26.2	16.1	0.51	27.3	13.2	0.46
	66	23.0	23.0	0.54	23.0	23.0	0.54	23.5	18.0	0.54	24.8	12.6	0.52	24.8	24.8	0.52	24.8	24.8	0.52	24.8	24.8	0.52	24.9	21.5	0.52	26.2	16.1	0.51	27.2	13.2	0.46
	70	23.0	23.0	0.58	23.0	23.0	0.58	23.5	18.0	0.57	24.8	12.6	0.56	24.8	24.8	0.56	24.8	24.8	0.56	24.8	24.8	0.56	24.9	21.5	0.56	26.2	16.1	0.54	27.2	13.2	0.49
	72	22.9	22.9	0.63	22.9	22.9	0.63	23.4	18.0	0.62	24.7	12.6	0.61	24.6	24.6	0.61	24.6	24.6	0.61	24.6	24.6	0.61	24.8	21.4	0.61	26.1	16.0	0.59	27.1	13.1	0.59
	75	22.6	22.6	0.71	22.6	22.6	0.71	23.2	17.9	0.70	24.4	12.5	0.68	24.4	24.4	0.68	24.4	24.4	0.68	24.4	24.4	0.68	24.5	21.4	0.68	25.8	16.0	0.66	26.8	13.0	0.66
2550	79	22.3	22.3	0.81	22.3	22.3	0.81	22.8	17.8	0.80	24.0	12.4	0.78	24.0	24.0	0.78	24.0	24.0	0.78	24.0	24.0	0.78	24.1	21.2	0.78	25.4	15.9	0.76	26.4	12.8	0.75
CFM	83	22.0	22.0	0.91	21.9	21.9	0.91	22.5	17.7	0.90	23.7	12.4	0.88	23.6	23.6	0.88	23.6	23.6	0.88	23.6	23.6	0.88	23.8	21.1	0.88	25.1	15.7	0.85	26.0	12.6	0.84
	87	21.6	21.6	1.01	21.6	21.6	1.01	22.1	17.6	1.00	23.3	12.3	0.98	23.3	23.3	0.98	23.3	23.3	0.98	23.3	23.3	0.98	23.4	20.9	0.97	24.7	15.6	0.95	25.6	12.4	0.94
	91	21.3	21.3	1.11	21.3	21.3	1.11	21.8	17.4	1.10	23.0	12.2	1.07	22.9	22.9	1.07	22.9	22.9	1.07	22.9	22.9	1.07	23.0	20.8	1.07	24.3	15.5	1.04	25.2	12.2	1.03
	93	21.1	21.1	1.16	21.1	21.1	1.16	21.6	17.4	1.15	22.8	12.1	1.12	22.7	22.7	1.12	22.7	22.7	1.12	22.8	22.8	1.12	22.9	20.7	1.12	24.1	15.5	1.09	25.0	12.1	1.08
	95	21.0	21.0	1.21	20.9	20.9	1.21	21.5	17.3	1.20	22.6	12.1	1.17	22.6	22.6	1.17	22.6	22.6	1.17	22.6	22.6	1.17	22.7	20.6	1.17	23.9	15.4	1.14	24.8	12.0	1.13
	99	20.6	20.6	1.31	20.6	20.6	1.31	21.1	17.2	1.30	22.2	12.0	1.27	22.2	22.2	1.27	22.2	22.2	1.27	22.2	22.2	1.27	22.3	20.5	1.27	23.5	15.3	1.23	24.4	11.8	1.22
	103	20.3	20.3	1.42	20.3	20.3	1.42	20.8	17.0	1.40	21.9	11.9	1.37	21.9	21.9	1.37	21.9	21.9	1.37	21.9	21.9	1.37	22.0	20.3	1.36	23.2	15.2	1.33	24.0	11.6	1.32
	106	20.0	20.0	1.49	20.0	20.0	1.49	20.5	16.9	1.48	21.6	11.8	1.44	21.6	21.6	1.44	21.6	21.6	1.44	21.6	21.6	1.44	21.7	20.2	1.44	22.9	15.1	1.40	23.8	11.5	1.39
	110	19.7	19.7	1.59	19.7	19.7	1.59	20.2	16.8	1.58	21.3	11.7	1.54	21.2	21.2	1.54	21.2	21.2	1.54	21.2	21.2	1.54	21.3	21.3	1.54	22.5	14.9	1.49	23.4	11.3	1.48
	115	19.3	19.3	1.72	19.3	19.3	1.72	19.7	16.6	1.70	20.8	11.6	1.66	20.8	20.8	1.66	20.8	20.8	1.66	20.8	20.8	1.66	20.9	20.9	1.66	22.0	14.8	1.61	22.9	11.0	1.60
	118	19.0	19.0	1.80	19.0	19.0	1.80	19.5	16.5	1.78	20.5	11.5	1.73	20.5	20.5	1.73	20.5	20.5	1.73	20.5	20.5	1.74	20.6	20.6	1.73	21.7	14.7	1.68	22.6	10.9	1.67
	122	18.7	18.7	1.90	18.7	18.7	1.90	19.2	16.3	1.88	20.2	11.4	1.83	20.1	20.1	1.83	20.1	20.1	1.83	20.2	20.2	1.83	20.3	20.3	1.83	21.4	14.5	1.78	22.2	10.7	1.76
	23	23.3	23.3	0.53	23.3	23.3	0.53	23.8	19.5	0.53	25.1	13.6	0.51	25.1	25.1	0.51	25.1	25.1	0.51	25.1	25.1	0.51	25.2	23.3	0.51	26.6	17.4	0.50	27.6	14.3	0.45
	30	23.3	23.3	0.53	23.2	23.2	0.53	23.8	19.5	0.53	25.1	13.6	0.51	25.1	25.1	0.52	25.1	25.1	0.52	25.1	25.1	0.52	25.2	23.3	0.51	26.6	17.4	0.50	27.6	14.2	0.45
	40	23.3	23.3	0.53	23.2	23.2	0.53	23.8	19.5	0.53	25.1	13.6	0.52	25.0	25.0	0.52	25.0	25.0	0.52	25.0	25.0	0.52	25.2	23.2	0.51	26.5	17.4	0.50	27.6	14.2	0.45
	50	23.2	23.2	0.54	23.2	23.2	0.54	23.8	19.5	0.53	25.1	13.6	0.52	25.0	25.0	0.52	25.0	25.0	0.52	25.0	25.0	0.52	25.2	23.2	0.52	26.5	17.4	0.50	27.5	14.2	0.45
	54	23.2	23.2	0.54	23.2	23.2	0.54	23.8	19.5	0.53	25.1	13.6	0.52	25.0	25.0	0.52	25.0	25.0	0.52	25.0	25.0	0.52	25.2	23.2	0.52	26.5	17.4	0.50	27.5	14.2	0.45
	58	23.2	23.2	0.54	23.2	23.2	0.54	23.8	19.5	0.53	25.1	13.6	0.52	25.0	25.0	0.52	25.0	25.0	0.52	25.0	25.0	0.52	25.2	23.2	0.52	26.5	17.4	0.50	27.5	14.2	0.46
	62	23.2	23.2	0.54	23.2	23.2	0.54	23.8	19.5	0.53	25.1	13.6	0.52	25.0	25.0	0.52	25.0	25.0	0.52	25.0	25.0	0.52	25.1	23.2	0.52	26.5	17.4	0.50	27.5	14.2	0.46
	66	23.2	23.2	0.54	23.2	23.2	0.54	23.8	19.5	0.53	25.0	13.6	0.52	25.0	25.0	0.52	25.0	25.0	0.52	25.0	25.0	0.52	25.1	23.2	0.52	26.5	17.3	0.50	27.5	14.2	0.46
	70	23.2	23.2	0.58	23.2	23.2	0.58	23.8	19.5	0.57	25.0	13.6	0.56	25.0	25.0	0.56	25.0	25.0	0.56	25.0	25.0	0.56	25.1	23.2	0.55	26.5	17.3	0.54	27.5	14.2	0.49
	72	23.1	23.1	0.63	23.1	23.1	0.63	23.7	19.4	0.62	24.9	13.6	0.60	24.9	24.9	0.60	24.9	24.9	0.60	24.9	24.9	0.60	25.0	23.2	0.60	26.4	17.3	0.59	27.4	14.2	0.58
	75	22.9	22.9	0.70	22.8	22.8	0.70	23.4	19.4	0.69	24.6	13.5	0.68	24.6	24.6	0.68	24.6	24.6	0.68	24.6	24.6	0.68	24.7	23.1	0.68	26.1	17.2	0.66	27.1	14.0	0.65
2950	79	22.5	22.5	0.80	22.5	22.5	0.80	23.1	19.2	0.79	24.3	13.4	0.77	24.2	24.2	0.77	24.2	24.2	0.77	24.3	24.3	0.77	24.4	22.9	0.77	25.7	17.1	0.75	26.7	13.8	0.75
CFM	83	22.2	22.2	0.90	22.2	22.2	0.90	22.7	19.1	0.89	23.9	13.3	0.87	23.9	23.9	0.87	23.9	23.9	0.87	23.9	23.9	0.87	24.0	22.8	0.87	25.3	17.0	0.85	26.3	13.6	0.84
	87	21.8	21.8	1.00	21.8	21.8	1.00	22.4	19.0	0.99	23.6	13.3	0.97	23.5	23.5	0.97	23.5	23.5	0.97	23.5	23.5	0.97	23.6	22.6	0.97	24.9	16.9	0.94	25.9	13.4	0.93
	91	21.5	21.5	1.10	21.5	21.5	1.10	22.0	18.8	1.09	23.2	13.2	1.07	23.2	23.2	1.07	23.2	23.2	1.07	23.2	23.2	1.07	23.3	22.5	1.06	24.6	16.8	1.03	25.5	13.2	1.03
	93	21.3	21.3	1.15	21.3	21.3	1.15	21.8	18.8	1.14	23.0	13.1	1.11	23.0	23.0	1.12	23.0	23.0	1.12	23.0	23.0	1.12	23.1	22.4	1.11	24.4	16.7	1.08	25.3	13.1	1.07
	95	21.2	21.2	1.20	21.2	21.2	1.20	21.7	18.7	1.19	22.8	13.1	1.16	22.8	22.8	1.16	22.8	22.8	1.16	22.8	22.8	1.16	22.9	22.3	1.16	24.2	16.6	1.13	25.1	13.0	1.12
	99	20.8	20.8	1.31	20.8	20.8	1.31	21.3	18.6	1.29	22.5	13.0	1.26	22.4	22.4	1.26	22.4	22.4	1.26	22.4	22.4	1.26	22.6	22.1	1.26	23.8	16.5	1.22	24.7	12.8	1.21
	103	20.5	20.5	1.41	20.5	20.5	1.41	21.0	18.4	1.39	22.1	12.9	1.36	22.1	22.1	1.36	22.1	22.1	1.36	22.1	22.1	1.36	22.2	21.9	1.36	23.4	16.4	1.32	24.3	12.6	1.31
	106	20.2	20.2	1.48	20.2	20.2	1.48	20.7	18.3	1.47	21.8	12.8	1.43	21.8	21.8	1.43	21.8	21.8	1.43	21.8	21.8	1.43	21.9	21.8	1.43	23.1	16.3	1.39	24.0	12.4	1.38
	110	19.9	19.9	1.58	19.9	19.9	1.58	20.4	18.1	1.57	21.5	12.7	1.53	21.4	21.4	1.53	21.4	21.4	1.53	21.4	21.4	1.53	21.6	21.6	1.53	22.7	16.1	1.48	23.6	12.2	1.47
	115	19.5	19.5	1.71	19.5	19.5	1.71	20.0	17.9	1.69	21.0	12.5	1.65	21.0	21.0	1.65	21.0	21.0	1.65	21.0	21.0	1.65	21.1	21.1	1.65	22.2	16.0	1.60	23.1	11.9	1.59
	118	19.2	19.2	1.78	19.2	19.2	1.78	19.7	17.8	1.77	20.7	12.4	1.72	20.7	20.7	1.72	20.7	20.7	1.72	20.7	20.7	1.72	20.8	20.8	1.72	22.0	15.8	1.67	22.8	11.8	1.66
	122	18.9	18.9	1.88	18.9	18.9	1.88	19.3	17.6	1.87	20.4	12.3	1.82	20.4	20.4	1.82	20.4	20.4	1.82	20.4	20.4	1.82	20.5	20.5	1.82	21.6	15.7	1.77	22.4	11.6	1.75
	23	23.5	23.5	0.53	23.4	23.4	0.53	24.0	21.0	0.52	25.3	14.6	0.51	25.3	25.3	0.51	25.3	25.3	0.51	25.3	25.3	0.51	25.4	25.0	0.51	26.8	18.7	0.50	27.8	15.3	0.45
	30	23.4	23.4	0.53	23.4	23.4	0.53	24.0	21.0	0.53	25.3	14.6	0.51	25.2	25.2	0.51	25.2	25.2	0.51	25.3	25.3	0.51	25.4	25.0	0.51	26.8	18.7	0.50	27.8	15.3	0.45
	40	23.4	23.4	0.53	23.4	23.4	0.53	24.0	21.0	0.53	25.3	14.6	0.51	25.2	25.2	0.51	25.2	25.2	0.51	25.2	25.2	0.51	25.4	25.0	0.51	26.8	18.7	0.50	27.8	15.3	0.45
	50	23.4	23.4	0.53	23.4	23.4	0.53	24.0	21.0	0.53	25.3	14.6	0.51	25.2	25.2	0.51	25.2	25.2	0.51	25.2	25.2	0.51	25.4	25.0	0.51	26.7	18.7	0.50	27.8	15.3	0.45
	54	23.4	23.4	0.53	23.4	23.4	0.53	24.0	20.9	0.53	25.3	14.6	0.51	25.2	25.2	0.52	25.2	25.2	0.52	25.2	25.2	0.52	25.4	25.0	0.51	26.7	18.6	0.50	27.8	15.3	0.45
	58	23.4	23.4	0.53	23.4	23.4	0.53	24.0	20.9	0.53	25.3	14.6	0.51	25.2	25.2	0.52	25.2	25.2	0.52	25.2	25.2	0.52	25.4	25.0	0.51	26.7	18.6	0.50	27.8	15.3	0.45
	62	23.4	23.4	0.53	23.4	23.4	0.53	24.0	20.9	0.53	25.2	14.6	0.52	25.2	25.2	0.52	25.2	25.2	0.52	25.2	25.2	0.52	25.3	25.0	0.51	26.7	18.6	0.50	27.7	15.3	0.45
	66	23.4	23.4	0.53	23.4	23.4	0.53	24.0	20.9	0.53	25.2	14.6	0.52	25.2	25.2	0.52	25.2	25.2	0.52	25.2	25.2	0.52	25.3	25.0	0.51	26.7	18.6	0.50	27.7	15.3	0.45
	70	23.4	23.4	0.57	23.4	23.4	0.57	24.0	20.9	0.57	25.2	14.6	0.55	25.2	25.2	0.55	25.2	25.2	0.55	25.2	25.2	0.55	25.3	24.9	0.55	26.7	18.6	0.54	27.7	15.3	0.49
	72	23.3	23.3	0.62	23.3	23.3	0.62	23.8	20.9	0.62	25.1	14.6	0.60	25.1	25.1	0.60	25.1	25.1	0.60	25.1	25.1	0.60	25.2	24.9	0.60	26.6	18.6	0.58	27.6	15.2	0.58
	75	23.0	23.0	0.70	23.0	23.0	0.70	23.6	20.8	0.69	24.8	14.5	0.67	24.8	24.8	0.67	24.8	24.8	0.67	24.8	24.8	0.67	24.9	24.8	0.67	26.3	18.5	0.65	27.3	15.0	0.65
3350	79	22.7	22.7	0.80	22.7	22.7	0.80	23.2	20.7	0.79	24.5	14.4	0.77	24.4	24.4	0.77	24.4	24.4	0.77	24.4	24.4	0.77	24.6	24.6	0.77	25.9	18.4	0.75	26.9	14.8	0.74
CFM	83	22.4	22.4	0.90	22.3	22.3	0.90	22.9	20.5	0.89	24.1	14.3	0.87	24.1	24.1	0.87	24.1	24.1	0.87	24.1	24.1	0.87	24.2	24.5	0.87	25.5	18.3	0.84	26.5	14.6	0.84
	87	22.0	22.0	1.00	22.0	22.0	1.00	22.5	20.4	0.99	23.7	14.2	0.96	23.7	23.7	0.96	23.7	23.7	0.96	23.7	23.7	0.96	23.8	24.3	0.96	25.1	18.2	0.94	26.1	14.4	0.93
	91	21.7	21.7	1.10	21.7	21.7	1.10	22.2	20.2	1.09	23.4	14.1	1.06	23.3	23.3	1.06	23.3	23.3	1.06	23.4	23.4	1.06	23.5	24.1	1.06	24.7	18.0	1.03	25.7	14.2	1.02
	93	21.5	21.5	1.15	21.5	21.5	1.15	22.0	20.2	1.14	23.2	14.1	1.11	23.2	23.2	1.11	23.2	23.2	1.11	23.2	23.2	1.11	23.3	24.0	1.11	24.6	18.0	1.08	25.5	14.0	1.07
	95	21.3	21.3	1.20	21.3	21.3	1.20	21.8	20.1	1.19	23.0	14.0	1.16	23.0	23.0	1.16	23.0	23.0	1.16	23.0	23.0	1.16	23.1	23.9	1.16	24.4	17.9	1.12	25.3	13.9	1.11
	99	21.0	21.0	1.30	21.0	21.0	1.30	21.5	19.9	1.29	22.6	13.9	1.25	22.6	22.6	1.25	22.6	22.6	1.26	22.6	22.6	1.26	22.7	23.8	1.25	24.0	17.7	1.22	24.9	13.7	1.21
	103	20.7	20.7	1.40	20.6	20.6	1.40	21.2	19.8	1.38	22.3	13.8	1.35	22.2	22.2	1.35	22.3	22.3	1.35	22.3	22.3	1.35	22.4	23.6	1.35	23.6	17.6	1.31	24.5	13.5	1.30
	106	20.4	20.4	1.47	20.4	20.4	1.47	20.9	19.7	1.46	22.0	13.7	1.42	22.0	22.0	1.42	22.0	22.0	1.42	22.0	22.0	1.42	22.1	23.4	1.42	23.3	17.5	1.38	24.2	13.3	1.37
	110	20.1	20.1	1.57	20.1	20.1	1.57	20.5	19.5	1.56	21.6	13.6	1.52	21.6	21.6	1.52	21.6	21.6	1.52	21.6	21.6	1.52	21.7	21.7	1.52	22.9	17.3	1.48	23.8	13.1	1.46
	115	19.6	19.6	1.70	19.6	19.6	1.70	20.1	19.3	1.68	21.2	13.4	1.64	21.2	21.2	1.64	21.2	21.2	1.64	21.2	21.2	1.64	21.3	21.3	1.64	22.4	17.1	1.59	23.3	12.8	1.58
	118	19.4	19.4	1.78	19.4	19.4	1.78	19.9	19.1	1.76	20.9	13.4	1.71	20.9	20.9	1.71	20.9	20.9	1.71	20.9	20.9	1.72	21.0	21.0	1.71	22.1	17.0	1.66	23.0	12.7	1.65
	122	19.0	19.0	1.88	19.0	19.0	1.88	19.5	18.9	1.86	20.5	13.2	1.81	20.5	20.5	1.81	20.5	20.5	1.81	20.5	20.5	1.81	20.6	20.6	1.81	21.7	16.9	1.76	22.6	12.4	1.74

TC: Evaporator Total Capacity (1,000 BTU/h) Net TC = TC - Blower input

SC: Evaporator Sensible Capacity(1,000 BTU/h) Net SC = SC - Blower input

PI: Power input(kW) Compressor + outdoor fan System PI = PI + Blower input

Note: TC and SC represent the evaporator's heat load and do not account for the blower input. To calculate the net capacity, subtract the blower input from each value.

is shown as reference data

The blank areas indicate that operation at this compressor speed is not possible under those conditions.

ID DB		80																				
ID WB		57			61			64			67			70			72			75		
ID CFM	OD DB	TC	SC	PI	TC	SC	PI	TC	SC	PI	TC	SC	PI	TC	SC	PI	TC	SC	PI	TC	SC	PI
2550 CFM	23	26.7	26.7	0.50	26.7	26.7	0.50	26.7	26.7	0.50	26.7	26.7	0.50	26.7	26.7	0.50	27.3	22.4	0.46	29.1	16.1	0.39
	30	26.6	26.6	0.50	26.6	26.6	0.50	26.6	26.6	0.50	26.7	26.7	0.50	26.6	26.6	0.50	27.3	22.4	0.46	29.1	16.1	0.39
	40	26.6	26.6	0.50	26.6	26.6	0.50	26.6	26.6	0.50	26.6	26.6	0.50	26.6	26.6	0.50	27.3	22.4	0.46	29.1	16.1	0.39
	50	26.6	26.6	0.50	26.6	26.6	0.50	26.6	26.6	0.50	26.6	26.6	0.50	26.6	26.6	0.50	27.3	22.4	0.46	29.1	16.1	0.39
	54	26.6	26.6	0.50	26.6	26.6	0.50	26.6	26.6	0.50	26.6	26.6	0.50	26.6	26.6	0.50	27.3	22.4	0.46	29.1	16.1	0.39
	58	26.6	26.6	0.50	26.6	26.6	0.50	26.6	26.6	0.50	26.6	26.6	0.50	26.6	26.6	0.50	27.3	22.4	0.46	29.1	16.1	0.39
	62	26.6	26.6	0.50	26.6	26.6	0.50	26.6	26.6	0.50	26.6	26.6	0.50	26.6	26.6	0.50	27.3	22.4	0.46	29.1	16.1	0.39
	66	26.6	26.6	0.50	26.6	26.6	0.50	26.6	26.6	0.50	26.6	26.6	0.50	26.6	26.6	0.50	27.2	22.4	0.46	29.1	16.1	0.39
	70	26.6	26.6	0.54	26.6	26.6	0.54	26.6	26.6	0.54	26.6	26.6	0.54	26.6	26.6	0.54	27.2	22.4	0.49	29.1	16.1	0.45
	72	26.5	26.5	0.59	26.5	26.5	0.59	26.5	26.5	0.59	26.5	26.5	0.59	26.5	26.5	0.59	27.1	22.3	0.59	28.9	16.1	0.50
	75	26.2	26.2	0.66	26.2	26.2	0.66	26.2	26.2	0.66	26.2	26.2	0.66	26.2	26.2	0.66	26.8	22.0	0.66	28.5	16.0	0.57
	79	25.8	25.8	0.75	25.8	25.8	0.75	25.8	25.8	0.75	25.8	25.8	0.75	25.8	25.8	0.75	26.4	21.7	0.75	28.0	15.8	0.68
	83	25.4	25.4	0.85	25.4	25.4	0.85	25.4	25.4	0.85	25.4	25.4	0.84	25.4	25.4	0.84	26.0	21.4	0.84	27.6	15.7	0.78
	87	25.0	25.0	0.94	25.0	25.0	0.94	25.0	25.0	0.94	25.0	25.0	0.94	25.0	25.0	0.94	25.6	21.1	0.94	27.1	15.6	0.88
	91	24.6	24.6	1.03	24.6	24.6	1.03	24.6	24.6	1.03	24.6	24.6	1.03	24.6	24.6	1.03	25.2	20.7	1.03	26.6	15.4	0.98
	93	24.4	24.4	1.08	24.4	24.4	1.08	24.4	24.4	1.08	24.5	24.5	1.08	24.4	24.4	1.08	25.0	20.6	1.08	26.4	15.4	1.03
	95	24.3	24.3	1.13	24.3	24.3	1.13	24.3	24.3	1.13	24.3	24.3	1.13	24.3	24.3	1.13	24.8	20.4	1.13	26.2	15.3	1.08
	99	23.9	23.9	1.22	23.9	23.9	1.22	23.9	23.9	1.22	23.9	23.9	1.22	23.9	23.9	1.22	24.4	20.1	1.22	25.7	15.1	1.18
	103	23.5	23.5	1.32	23.5	23.5	1.32	23.5	23.5	1.32	23.5	23.5	1.32	23.5	23.5	1.32	24.0	19.8	1.32	25.2	15.0	1.28
	106	23.2	23.2	1.39	23.2	23.2	1.39	23.2	23.2	1.39	23.2	23.2	1.39	23.2	23.2	1.39	23.8	19.5	1.39	24.9	14.9	1.36
	110	22.8	22.8	1.48	22.8	22.8	1.48	22.8	22.8	1.48	22.8	22.8	1.48	22.8	22.8	1.48	23.4	19.2	1.48	24.4	14.7	1.46
	115	22.3	22.3	1.60	22.3	22.3	1.60	22.3	22.3	1.60	22.3	22.3	1.60	22.3	22.3	1.60	22.9	18.8	1.60	23.8	14.5	1.58
	118	22.0	22.0	1.67	22.0	22.0	1.67	22.0	22.0	1.67	22.0	22.0	1.67	22.0	22.0	1.67	22.6	18.5	1.67	23.5	14.4	1.66
	122	21.7	21.7	1.76	21.7	21.7	1.76	21.7	21.7	1.76	21.7	21.7	1.76	21.7	21.7	1.76	22.2	18.2	1.76	23.0	14.2	1.76
2950 CFM	23	26.9	26.9	0.50	26.9	26.9	0.50	26.9	26.9	0.50	26.9	26.9	0.50	26.9	26.9	0.50	27.6	24.2	0.45	29.4	17.4	0.39
	30	26.9	26.9	0.50	26.9	26.9	0.50	26.9	26.9	0.50	26.9	26.9	0.50	26.9	26.9	0.50	27.6	24.2	0.45	29.4	17.4	0.39
	40	26.9	26.9	0.50	26.9	26.9	0.50	26.9	26.9	0.50	26.9	26.9	0.50	26.9	26.9	0.50	27.6	24.2	0.45	29.4	17.4	0.39
	50	26.9	26.9	0.50	26.9	26.9	0.50	26.9	26.9	0.50	26.9	26.9	0.50	26.9	26.9	0.50	27.5	24.2	0.45	29.4	17.4	0.39
	54	26.9	26.9	0.50	26.9	26.9	0.50	26.9	26.9	0.50	26.9	26.9	0.50	26.9	26.9	0.50	27.5	24.2	0.45	29.4	17.4	0.39
	58	26.9	26.9	0.50	26.9	26.9	0.50	26.9	26.9	0.50	26.9	26.9	0.50	26.9	26.9	0.50	27.5	24.2	0.46	29.4	17.4	0.39
	62	26.9	26.9	0.50	26.9	26.9	0.50	26.9	26.9	0.50	26.9	26.9	0.50	26.9	26.9	0.50	27.5	24.2	0.46	29.4	17.4	0.39
	66	26.9	26.9	0.50	26.9	26.9	0.50	26.9	26.9	0.50	26.9	26.9	0.50	26.9	26.9	0.50	27.5	24.2	0.46	29.4	17.4	0.39
	70	26.9	26.9	0.54	26.9	26.9	0.54	26.9	26.9	0.54	26.9	26.9	0.53	26.9	26.9	0.54	27.5	24.2	0.49	29.4	17.4	0.45
	72	26.7	26.7	0.58	26.7	26.7	0.58	26.7	26.7	0.58	26.7	26.7	0.58	26.7	26.7	0.58	27.4	24.1	0.58	29.2	17.4	0.50
	75	26.4	26.4	0.65	26.4	26.4	0.65	26.4	26.4	0.65	26.5	26.5	0.65	26.5	26.5	0.65	27.1	23.8	0.65	28.8	17.3	0.57
	79	26.1	26.1	0.75	26.1	26.1	0.75	26.1	26.1	0.75	26.1	26.1	0.75	26.1	26.1	0.75	26.7	23.5	0.75	28.3	17.1	0.67
	83	25.7	25.7	0.84	25.7	25.7	0.84	25.7	25.7	0.84	25.7	25.7	0.84	25.7	25.7	0.84	26.3	23.1	0.84	27.8	17.0	0.77
	87	25.3	25.3	0.93	25.3	25.3	0.93	25.3	25.3	0.93	25.3	25.3	0.93	25.3	25.3	0.93	25.9	22.8	0.93	27.4	16.8	0.87
	91	24.9	24.9	1.03	24.9	24.9	1.03	24.9	24.9	1.03	24.9	24.9	1.03	24.9	24.9	1.03	25.5	22.4	1.03	26.9	16.7	0.97
	93	24.7	24.7	1.07	24.7	24.7	1.07	24.7	24.7	1.07	24.7	24.7	1.07	24.7	24.7	1.07	25.3	22.2	1.07	26.7	16.6	1.02
	95	24.5	24.5	1.12	24.5	24.5	1.12	24.5	24.5	1.12	24.5	24.5	1.12	24.5	24.5	1.12	25.1	22.0	1.12	26.4	16.5	1.07
	99	24.1	24.1	1.21	24.1	24.1	1.21	24.1	24.1	1.21	24.1	24.1	1.21	24.1	24.1	1.21	24.7	21.7	1.21	25.9	16.3	1.17
	103	23.7	23.7	1.31	23.7	23.7	1.31	23.7	23.7	1.31	23.7	23.7	1.31	23.7	23.7	1.31	24.3	21.3	1.31	25.5	16.2	1.27
	106	23.4	23.4	1.38	23.4	23.4	1.38	23.4	23.4	1.38	23.4	23.4	1.38	23.4	23.4	1.38	24.0	21.1	1.38	25.1	16.0	1.35
	110	23.0	23.0	1.47	23.0	23.0	1.47	23.0	23.0	1.47	23.0	23.0	1.47	23.0	23.0	1.47	23.6	20.7	1.47	24.6	15.9	1.45
	115	22.6	22.6	1.59	22.6	22.6	1.59	22.6	22.6	1.59	22.6	22.6	1.59	22.6	22.6	1.59	23.1	20.3	1.59	24.0	15.6	1.57
	118	22.3	22.3	1.66	22.3	22.3	1.66	22.3	22.3	1.66	22.3	22.3	1.66	22.3	22.3	1.66	22.8	20.0	1.66	23.7	15.5	1.65
	122	21.9	21.9	1.75	21.9	21.9	1.75	21.9	21.9	1.75	21.9	21.9	1.75	21.9	21.9	1.75	22.4	19.7	1.75	23.2	15.3	1.75
3350 CFM	23	27.1	27.1	0.49	27.1	27.1	0.49	27.1	27.1	0.49	27.1	27.1	0.49	27.1	27.1	0.49	27.8	26.0	0.45	29.6	18.7	0.39
	30	27.1	27.1	0.49	27.1	27.1	0.49	27.1	27.1	0.49	27.1	27.1	0.49	27.1	27.1	0.49	27.8	26.0	0.45	29.6	18.7	0.39
	40	27.1	27.1	0.49	27.1	27.1	0.49	27.1	27.1	0.49	27.1	27.1	0.49	27.1	27.1	0.49	27.8	26.0	0.45	29.6	18.7	0.39
	50	27.1	27.1	0.50	27.1	27.1	0.50	27.1	27.1	0.50	27.1	27.1	0.50	27.1	27.1	0.50	27.8	26.0	0.45	29.6	18.7	0.39
	54	27.1	27.1	0.50	27.1	27.1	0.50	27.1	27.1	0.50	27.1	27.1	0.50	27.1	27.1	0.50	27.8	26.0	0.45	29.6	18.7	0.39
	58	27.1	27.1	0.50	27.1	27.1	0.50	27.1	27.1	0.50	27.1	27.1	0.50	27.1	27.1	0.50	27.8	26.0	0.45	29.6	18.7	0.39
	62	27.1	27.1	0.50	27.1	27.1	0.50	27.1	27.1	0.50	27.1	27.1	0.50	27.1	27.1	0.50	27.7	26.0	0.45	29.6	18.7	0.39
	66	27.1	27.1	0.50	27.1	27.1	0.50	27.1	27.1	0.50	27.1	27.1	0.50	27.1	27.1	0.50	27.7	26.0	0.45	29.6	18.7	0.39
	70	27.1	27.1	0.53	27.1	27.1	0.53	27.1	27.1	0.53	27.1	27.1	0.53	27.1	27.1	0.53	27.7	26.0	0.49	29.6	18.7	0.44
	72	26.9	26.9	0.58	26.9	26.9	0.58	26.9	26.9	0.58	27.0	27.0	0.58	27.0	27.0	0.58	27.6	25.9	0.58	29.4	18.6	0.49
	75	26.7	26.7	0.65	26.7	26.7	0.65	26.7	26.7	0.65	26.7	26.7	0.65	26.7	26.7	0.65	27.3	25.6	0.65	29.0	18.5	0.57
	79	26.3	26.3	0.74	26.3	26.3	0.74	26.3	26.3	0.74	26.3	26.3	0.74	26.3	26.3	0.74	26.9	25.2	0.74	28.5	18.4	0.67
	83	25.9	25.9	0.84	25.9	25.9	0.84	25.9	25.9	0.84	25.9	25.9	0.84	25.9	25.9	0.84	26.5	24.8	0.84	28.1	18.2	0.77
	87	25.5	25.5	0.93	25.5	25.5	0.93	25.5	25.5	0.93	25.5	25.5	0.93	25.5	25.5	0.93	26.1	24.4	0.93	27.6	18.1	0.87
	91	25.1	25.1	1.02	25.1	25.1	1.02	25.1	25.1	1.02	25.1	25.1	1.02	25.1	25.1	1.02	25.7	24.1	1.02	27.1	17.9	0.97
	93	24.9	24.9	1.07	24.9	24.9	1.07	24.9	24.9	1.07	24.9	24.9	1.07	24.9	24.9	1.07	25.5	23.9	1.07	26.9	17.8	1.02
	95	24.7	24.7	1.12	24.7	24.7	1.12	24.7	24.7	1.12	24.7	24.7	1.12	24.7	24.7	1.12	25.3	23.7	1.11	26.6	17.7	1.07
	99	24.3	24.3	1.21	24.3	24.3	1.21	24.3	24.3	1.21	24.3	24.3	1.21	24.3	24.3	1.21	24.9	23.3	1.21	26.2	17.6	1.17
	103	23.9	23.9	1.30	23.9	23.9	1.30	23.9	23.9	1.30	23.9	23.9	1.30	23.9	23.9	1.30	24.5	22.9	1.30	25.7	17.4	1.27
	106	23.6	23.6	1.37	23.6	23.6	1.37	23.6	23.6	1.37	23.6	23.6	1.37	23.6	23.6	1.37	24.2	22.7	1.37	25.3	17.2	1.34
	110	23.2	23.2	1.46	23.2	23.2	1.46	23.2	23.2	1.46	23.2	23.2	1.46	23.2	23.2	1.46	23.8	22.3	1.46	24.8	17.1	1.44
	115	22.7	22.7	1.58	22.7	22.7	1.58	22.7	22.7	1.58	22.7	22.7	1.58	22.7	22.7	1.58	23.3	21.8	1.58	24.2	16.8	1.56
	118	22.4	22.4	1.65	22.4	22.4	1.65	22.4	22.4	1.65	22.4	22.4	1.65	22.4	22.4	1.65	23.0	21.5	1.65	23.9	16.7	1.64
	122	22.0	22.0	1.74	22.0	22.0	1.74	22.0	22.0	1.74	22.1	22.1	1.74	22.0	22.0	1.74	22.6	21.1	1.74	23.4	16.5	1.74

TC: Evaporator Total Capacity (1,000 BTU/h) Net TC = TC - Blower input

SC: Evaporator Sensible Capacity(1,000 BTU/h) Net SC = SC - Blower input

PI: Power input(kW) Compressor + outdoor fan System PI = PI + Blower input

Note: TC and SC represent the evaporator's heat load and do not account for the blower input. To calculate the net capacity, subtract the blower input from each value.

is shown as reference data

The blank areas indicate that operation at this compressor speed is not possible under those conditions.

ID DB		85																				
ID WB		57			61			64			67			70			72			75		
ID CFM	OD DB	TC	SC	PI	TC	SC	PI	TC	SC	PI	TC	SC	PI	TC	SC	PI	TC	SC	PI	TC	SC	PI
2550 CFM	23	28.6	28.6	0.48	28.6	28.6	0.48	28.6	28.6	0.48	28.6	28.6	0.48	28.6	28.6	0.48	28.6	28.6	0.44	29.1	25.0	0.39
	30	28.6	28.6	0.48	28.6	28.6	0.48	28.6	28.6	0.48	28.6	28.6	0.48	28.6	28.6	0.48	28.6	28.6	0.44	29.1	25.0	0.39
	40	28.5	28.5	0.48	28.5	28.5	0.48	28.6	28.6	0.48	28.6	28.6	0.48	28.6	28.6	0.48	28.6	28.6	0.44	29.1	25.0	0.39
	50	28.5	28.5	0.48	28.5	28.5	0.48	28.5	28.5	0.48	28.5	28.5	0.48	28.6	28.6	0.48	28.6	28.6	0.44	29.1	25.0	0.39
	54	28.5	28.5	0.48	28.5	28.5	0.48	28.5	28.5	0.48	28.5	28.5	0.48	28.5	28.5	0.48	28.5	28.5	0.45	29.1	25.0	0.39
	58	28.5	28.5	0.48	28.5	28.5	0.48	28.5	28.5	0.48	28.5	28.5	0.48	28.5	28.5	0.48	28.5	28.5	0.45	29.1	25.0	0.39
	62	28.5	28.5	0.48	28.5	28.5	0.48	28.5	28.5	0.48	28.5	28.5	0.48	28.5	28.5	0.48	28.5	28.5	0.45	29.1	25.0	0.39
	66	28.5	28.5	0.48	28.5	28.5	0.48	28.5	28.5	0.48	28.5	28.5	0.48	28.5	28.5	0.48	28.5	28.5	0.45	29.1	25.0	0.39
	70	28.5	28.5	0.52	28.5	28.5	0.52	28.5	28.5	0.52	28.5	28.5	0.52	28.5	28.5	0.52	28.5	28.5	0.48	29.1	25.0	0.45
	72	28.4	28.4	0.56	28.4	28.4	0.56	28.4	28.4	0.56	28.4	28.4	0.56	28.4	28.4	0.56	28.4	28.4	0.57	28.9	24.9	0.50
	75	28.1	28.1	0.63	28.1	28.1	0.63	28.1	28.1	0.63	28.1	28.1	0.63	28.1	28.1	0.63	28.1	28.1	0.64	28.5	24.7	0.57
	79	27.6	27.6	0.72	27.6	27.6	0.72	27.6	27.6	0.72	27.7	27.7	0.72	27.7	27.7	0.72	27.7	27.7	0.73	28.0	24.5	0.68
	83	27.2	27.2	0.81	27.2	27.2	0.81	27.2	27.2	0.81	27.2	27.2	0.81	27.2	27.2	0.81	27.2	27.2	0.82	27.6	24.3	0.78
	87	26.8	26.8	0.90	26.8	26.8	0.90	26.8	26.8	0.90	26.8	26.8	0.90	26.8	26.8	0.90	26.8	26.8	0.91	27.1	24.1	0.88
	91	26.4	26.4	0.99	26.4	26.4	0.99	26.4	26.4	0.99	26.4	26.4	0.99	26.4	26.4	0.99	26.4	26.4	1.01	26.6	23.9	0.98
	93	26.2	26.2	1.04	26.2	26.2	1.04	26.2	26.2	1.04	26.2	26.2	1.04	26.2	26.2	1.04	26.2	26.2	1.05	26.4	23.8	1.03
	95	26.0	26.0	1.08	26.0	26.0	1.08	26.0	26.0	1.08	26.0	26.0	1.08	26.0	26.0	1.08	26.0	26.0	1.10	26.2	23.7	1.08
	99	25.6	25.6	1.17	25.6	25.6	1.17	25.6	25.6	1.17	25.6	25.6	1.17	25.6	25.6	1.17	25.6	25.6	1.19	25.7	23.4	1.18
	103	25.2	25.2	1.26	25.2	25.2	1.26	25.2	25.2	1.26	25.2	25.2	1.26	25.2	25.2	1.26	25.2	25.2	1.28	25.2	23.2	1.28
	106	24.9	24.9	1.33	24.9	24.9	1.33	24.9	24.9	1.33	24.9	24.9	1.33	24.9	24.9	1.33	24.9	24.9	1.35	24.9	23.0	1.36
	110	24.4	24.4	1.42	24.4	24.4	1.42	24.4	24.4	1.42	24.5	24.5	1.42	24.5	24.5	1.42	24.5	24.5	1.44	24.4	22.8	1.46
	115	23.9	23.9	1.53	23.9	23.9	1.53	23.9	23.9	1.54	23.9	23.9	1.54	23.9	23.9	1.54	23.9	23.9	1.56	23.8	23.8	1.58
	118	23.6	23.6	1.60	23.6	23.6	1.60	23.6	23.6	1.60	23.6	23.6	1.60	23.6	23.6	1.60	23.6	23.6	1.62	23.5	23.5	1.66
	122	23.2	23.2	1.69	23.2	23.2	1.69	23.2	23.2	1.69	23.2	23.2	1.69	23.2	23.2	1.69	23.2	23.2	1.72	23.0	23.0	1.76
2950 CFM	23	28.9	28.9	0.48	28.9	28.9	0.48	28.9	28.9	0.48	28.9	28.9	0.48	28.9	28.9	0.48	28.9	28.9	0.44	29.4	27.0	0.39
	30	28.9	28.9	0.48	28.9	28.9	0.48	28.9	28.9	0.48	28.9	28.9	0.48	28.9	28.9	0.48	28.9	28.9	0.44	29.4	27.0	0.39
	40	28.8	28.8	0.48	28.8	28.8	0.48	28.8	28.8	0.48	28.9	28.9	0.48	28.9	28.9	0.48	28.9	28.9	0.44	29.4	27.0	0.39
	50	28.8	28.8	0.48	28.8	28.8	0.48	28.8	28.8	0.48	28.8	28.8	0.48	28.8	28.8	0.48	28.8	28.8	0.44	29.4	27.0	0.39
	54	28.8	28.8	0.48	28.8	28.8	0.48	28.8	28.8	0.48	28.8	28.8	0.48	28.8	28.8	0.48	28.8	28.8	0.44	29.4	27.0	0.39
	58	28.8	28.8	0.48	28.8	28.8	0.48	28.8	28.8	0.48	28.8	28.8	0.48	28.8	28.8	0.48	28.8	28.8	0.44	29.4	27.0	0.39
	62	28.8	28.8	0.48	28.8	28.8	0.48	28.8	28.8	0.48	28.8	28.8	0.48	28.8	28.8	0.48	28.8	28.8	0.44	29.4	27.0	0.39
	66	28.8	28.8	0.48	28.8	28.8	0.48	28.8	28.8	0.48	28.8	28.8	0.48	28.8	28.8	0.48	28.8	28.8	0.44	29.4	27.0	0.39
	70	28.8	28.8	0.51	28.8	28.8	0.51	28.8	28.8	0.51	28.8	28.8	0.51	28.8	28.8	0.51	28.8	28.8	0.47	29.4	27.0	0.45
	72	28.7	28.7	0.56	28.7	28.7	0.56	28.7	28.7	0.56	28.7	28.7	0.56	28.7	28.7	0.56	28.7	28.7	0.57	29.2	26.9	0.50
	75	28.3	28.3	0.63	28.3	28.3	0.63	28.4	28.4	0.63	28.4	28.4	0.63	28.4	28.4	0.63	28.4	28.4	0.63	28.8	26.7	0.57
	79	27.9	27.9	0.72	27.9	27.9	0.72	27.9	27.9	0.72	27.9	27.9	0.72	27.9	27.9	0.72	27.9	27.9	0.73	28.3	26.5	0.67
	83	27.5	27.5	0.81	27.5	27.5	0.81	27.5	27.5	0.81	27.5	27.5	0.81	27.5	27.5	0.81	27.5	27.5	0.82	27.8	26.3	0.77
	87	27.1	27.1	0.90	27.1	27.1	0.90	27.1	27.1	0.90	27.1	27.1	0.90	27.1	27.1	0.90	27.1	27.1	0.91	27.4	26.0	0.87
	91	26.7	26.7	0.99	26.7	26.7	0.99	26.7	26.7	0.99	26.7	26.7	0.99	26.7	26.7	0.99	26.7	26.7	1.00	26.9	25.8	0.97
	93	26.5	26.5	1.03	26.5	26.5	1.03	26.5	26.5	1.03	26.5	26.5	1.03	26.5	26.5	1.03	26.5	26.5	1.04	26.7	25.7	1.02
	95	26.3	26.3	1.08	26.3	26.3	1.08	26.3	26.3	1.08	26.3	26.3	1.08	26.3	26.3	1.08	26.3	26.3	1.09	26.4	25.6	1.07
	99	25.8	25.8	1.17	25.8	25.8	1.17	25.8	25.8	1.17	25.9	25.9	1.17	25.9	25.9	1.17	25.9	25.9	1.18	25.9	25.3	1.17
	103	25.4	25.4	1.26	25.4	25.4	1.26	25.4	25.4	1.26	25.4	25.4	1.26	25.4	25.4	1.26	25.4	25.4	1.27	25.5	25.1	1.27
	106	25.1	25.1	1.32	25.1	25.1	1.32	25.1	25.1	1.32	25.1	25.1	1.32	25.1	25.1	1.32	25.1	25.1	1.34	25.1	24.9	1.35
	110	24.7	24.7	1.41	24.7	24.7	1.41	24.7	24.7	1.41	24.7	24.7	1.41	24.7	24.7	1.41	24.7	24.7	1.43	24.6	24.6	1.45
	115	24.2	24.2	1.52	24.2	24.2	1.52	24.2	24.2	1.53	24.2	24.2	1.53	24.2	24.2	1.53	24.2	24.2	1.55	24.0	24.0	1.57
	118	23.9	23.9	1.59	23.9	23.9	1.59	23.9	23.9	1.59	23.9	23.9	1.59	23.9	23.9	1.59	23.9	23.9	1.61	23.7	23.7	1.65
	122	23.4	23.4	1.68	23.4	23.4	1.68	23.4	23.4	1.68	23.5	23.5	1.68	23.5	23.5	1.68	23.5	23.5	1.70	23.2	23.2	1.75
3350 CFM	23	29.1	29.1	0.47	29.1	29.1	0.47	29.1	29.1	0.47	29.1	29.1	0.47	29.1	29.1	0.47	29.1	29.1	0.44	29.6	29.0	0.39
	30	29.1	29.1	0.47	29.1	29.1	0.47	29.1	29.1	0.47	29.1	29.1	0.47	29.1	29.1	0.47	29.1	29.1	0.44	29.6	29.0	0.39
	40	29.1	29.1	0.47	29.1	29.1	0.47	29.1	29.1	0.47	29.1	29.1	0.47	29.1	29.1	0.47	29.1	29.1	0.44	29.6	29.0	0.39
	50	29.1	29.1	0.48	29.1	29.1	0.48	29.1	29.1	0.48	29.1	29.1	0.48	29.1	29.1	0.48	29.1	29.1	0.44	29.6	29.0	0.39
	54	29.1	29.1	0.48	29.1	29.1	0.48	29.1	29.1	0.48	29.1	29.1	0.48	29.1	29.1	0.48	29.1	29.1	0.44	29.6	29.0	0.39
	58	29.0	29.0	0.48	29.0	29.0	0.48	29.1	29.1	0.48	29.1	29.1	0.48	29.1	29.1	0.48	29.1	29.1	0.44	29.6	29.0	0.39
	62	29.0	29.0	0.48	29.0	29.0	0.48	29.0	29.0	0.48	29.1	29.1	0.48	29.1	29.1	0.48	29.1	29.1	0.44	29.6	29.0	0.39
	66	29.0	29.0	0.48	29.0	29.0	0.48	29.0	29.0	0.48	29.1	29.1	0.48	29.1	29.1	0.48	29.1	29.1	0.44	29.6	29.0	0.39
	70	29.0	29.0	0.51	29.0	29.0	0.51	29.0	29.0	0.51	29.0	29.0	0.51	29.1	29.1	0.51	29.1	29.1	0.47	29.6	29.0	0.44
	72	28.9	28.9	0.56	28.9	28.9	0.56	28.9	28.9	0.56	28.9	28.9	0.56	28.9	28.9	0.56	28.9	28.9	0.56	29.4	28.9	0.49
	75	28.6	28.6	0.62	28.6	28.6	0.62	28.6	28.6	0.62	28.6	28.6	0.62	28.6	28.6	0.62	28.6	28.6	0.63	29.0	28.7	0.57
	79	28.1	28.1	0.71	28.1	28.1	0.71	28.2	28.2	0.71	28.2	28.2	0.71	28.2	28.2	0.71	28.2	28.2	0.72	28.5	28.5	0.67
	83	27.7	27.7	0.80	27.7	27.7	0.80	27.7	27.7	0.80	27.7	27.7	0.80	27.7	27.7	0.80	27.7	27.7	0.81	28.1	28.2	0.77
	87	27.3	27.3	0.89	27.3	27.3	0.89	27.3	27.3	0.89	27.3	27.3	0.89	27.3	27.3	0.89	27.3	27.3	0.90	27.6	28.0	0.87
	91	26.9	26.9	0.98	26.9	26.9	0.98	26.9	26.9	0.98	26.9	26.9	0.98	26.9	26.9	0.98	26.9	26.9	0.99	27.1	27.7	0.97
	93	26.7	26.7	1.03	26.7	26.7	1.03	26.7	26.7	1.03	26.7	26.7	1.03	26.7	26.7	1.03	26.7	26.7	1.04	26.9	27.6	1.02
	95	26.5	26.5	1.07	26.5	26.5	1.07	26.5	26.5	1.07	26.5	26.5	1.07	26.5	26.5	1.07	26.5	26.5	1.08	26.6	27.5	1.07
	99	26.0	26.0	1.16	26.0	26.0	1.16	26.1	26.1	1.16	26.1	26.1	1.16	26.1	26.1	1.16	26.1	26.1	1.18	26.2	27.2	1.17
	103	25.6	25.6	1.25	25.6	25.6	1.25	25.6	25.6	1.25	25.6	25.6	1.25	25.6	25.6	1.25	25.6	25.6	1.27	25.7	26.9	1.27
	106	25.3	25.3	1.32	25.3	25.3	1.32	25.3	25.3	1.32	25.3	25.3	1.32	25.3	25.3	1.32	25.3	25.3	1.33	25.3	26.7	1.34
	110	24.9	24.9	1.41	24.9	24.9	1.41	24.9	24.9	1.41	24.9	24.9	1.41	24.9	24.9	1.41	24.9	24.9	1.42	24.8	26.4	1.44
	115	24.4	24.4	1.52	24.4	24.4	1.52	24.4	24.4	1.52	24.4	24.4	1.52	24.4	24.4	1.52	24.4	24.4	1.54	24.2	24.2	1.56
	118	24.0	24.0	1.58	24.1	24.1	1.58	24.1	24.1	1.58	24.1	24.1	1.58	24.1	24.1	1.58	24.1	24.1	1.61	23.9	23.9	1.64
	122	23.6	23.6	1.67	23.6	23.6	1.67	23.6	23.6	1.67	23.6	23.6	1.67	23.6	23.6	1.67	23.6	23.6	1.70	23.4	23.4	1.74

TC: Evaporator Total Capacity (1,000 BTU/h) Net TC = TC - Blower input

SC: Evaporator Sensible Capacity(1,000 BTU/h) Net SC = SC - Blower input

PI: Power input(kW) Compressor + outdoor fan System PI = PI + Blower input

Note: TC and SC represent the evaporator's heat load and do not account for the blower input. To calculate the net capacity, subtract the blower input from each value.

is shown as reference data

The blank areas indicate that operation at this compressor speed is not possible under those conditions.

ID DB		70												75																	
ID WB		57			61			64			67			57			61			64			67			70			72		
ID CFM	OD DB	TC	SC	PI	TC	SC	PI	TC	SC	PI	TC	SC	PI	TC	SC	PI	TC	SC	PI	TC	SC	PI	TC	SC	PI	TC	SC	PI	TC	SC	PI
	23	84.6	75.6	3.40	94.0	65.7	3.42	99.0	52.0	3.33	105.3	43.2	3.19	88.7	88.7	3.41	93.8	81.7	3.42	99.0	67.3	3.33	105.3	58.8	3.19	111.8	50.2	3.04	116.1	43.4	2.95
	30	84.4	75.4	3.42	93.8	65.5	3.44	98.8	51.9	3.35	105.0	43.1	3.22	88.5	88.5	3.43	93.6	81.6	3.44	98.8	67.1	3.35	105.0	58.7	3.22	111.6	50.1	3.07	115.8	43.3	2.97
	40	84.1	75.1	3.44	93.4	65.3	3.48	98.5	51.7	3.39	104.7	43.0	3.25	88.2	88.2	3.45	93.3	81.3	3.48	98.5	66.9	3.39	104.7	58.5	3.25	111.2	49.9	3.10	115.4	43.2	3.00
	50	83.8	74.9	3.46	93.1	65.1	3.52	98.2	51.6	3.43	104.3	42.9	3.29	87.9	87.9	3.47	93.0	81.0	3.52	98.2	66.7	3.43	104.3	58.3	3.29	110.8	49.8	3.13	115.0	43.1	3.03
	54	83.7	74.8	3.47	93.0	65.0	3.41	98.0	51.5	3.36	104.2	42.8	3.30	87.7	87.7	3.48	92.8	80.9	3.41	98.0	66.6	3.36	104.2	58.2	3.30	110.7	49.7	3.24	114.9	43.0	3.20
	58	83.6	74.7	3.66	92.9	64.9	3.64	97.9	51.4	3.62	104.0	42.7	3.59	87.6	87.6	3.67	92.7	80.8	3.64	97.9	66.5	3.62	104.0	58.1	3.59	110.5	49.6	3.55	114.7	42.9	3.53
	62	83.0	74.1	3.97	92.0	64.6	3.96	97.0	51.2	3.94	103.1	42.5	3.91	87.0	87.0	3.99	91.8	80.4	3.96	97.0	66.2	3.94	103.1	57.8	3.91	109.5	49.4	3.89	113.6	42.7	3.87
	66	81.9	73.3	4.29	90.6	64.2	4.28	95.4	50.8	4.26	101.4	42.2	4.24	85.8	85.8	4.30	90.4	79.8	4.28	95.4	65.7	4.26	101.4	57.4	4.24	107.8	49.0	4.22	111.9	42.4	4.20
	70	80.8	72.6	4.60	89.1	61.7	4.60	93.9	50.5	4.59	99.8	41.9	4.57	84.7	84.7	4.61	89.0	76.8	4.60	93.9	65.3	4.59	99.8	57.0	4.57	106.0	48.7	4.55	110.1	42.1	4.54
	72	80.3	72.3	4.75	88.4	61.4	4.76	93.2	50.3	4.75	99.0	41.8	4.73	84.2	84.2	4.77	88.2	76.4	4.76	93.2	65.0	4.75	99.0	56.8	4.73	105.2	48.5	4.72	109.2	42.0	4.70
	75	79.5	71.8	4.99	87.3	60.8	5.00	92.0	50.0	4.99	97.8	41.6	4.98	83.3	83.3	5.00	87.2	75.7	5.00	92.0	64.7	4.99	97.8	56.5	4.98	103.9	48.2	4.96	107.9	41.7	4.95
2550	79	78.4	71.2	5.30	85.9	60.1	5.31	90.5	49.6	5.32	96.2	41.2	5.31	82.2	82.2	5.32	85.7	74.8	5.31	90.5	64.2	5.32	96.2	56.1	5.31	102.2	47.9	5.30	106.1	41.4	5.29
CFM	83	77.3	70.5	5.61	84.4	59.3	5.63	89.0	49.2	5.64	94.6	40.9	5.63	81.1	81.1	5.63	84.3	73.8	5.63	89.0	63.6	5.64	94.6	55.6	5.63	100.5	47.5	5.63	104.3	41.1	5.62
	87	76.3	69.8	5.92	83.0	58.6	5.95	87.5	48.8	5.96	93.0	40.5	5.96	79.9	79.9	5.94	82.8	72.9	5.95	87.5	63.1	5.96	93.0	55.1	5.96	98.8	47.1	5.96	102.5	40.7	5.96
	91	75.2	69.1	6.24	81.6	57.8	6.27	86.0	48.3	6.29	91.4	40.2	6.29	78.8	78.8	6.26	81.4	71.9	6.27	86.0	62.5	6.29	91.4	54.6	6.29	97.0	46.6	6.29	100.7	40.4	6.29
	93	74.7	68.8	6.39	80.8	57.4	6.43	85.2	48.1	6.45	90.6	40.0	6.45	78.3	78.3	6.41	80.7	71.4	6.43	85.2	62.2	6.45	90.6	54.4	6.45	96.2	46.4	6.46	99.9	40.2	6.46
	95	74.1	68.4	6.55	80.1	57.0	6.59	84.4	47.9	6.61	89.7	39.8	6.62	77.7	77.7	6.57	80.0	71.0	6.59	84.4	62.0	6.61	89.7	54.1	6.62	95.3	46.2	6.62	99.0	40.0	6.63
	99	73.1	67.7	6.86	78.7	56.2	6.91	82.9	47.4	6.93	88.1	39.4	6.94	76.6	76.6	6.88	78.5	70.0	6.91	82.9	61.4	6.93	88.1	53.6	6.94	93.6	45.8	6.95	97.2	39.6	6.96
	103	72.0	67.0	7.17	77.2	55.4	7.23	81.4	46.9	7.26	86.5	39.0	7.27	75.5	75.5	7.19	77.1	69.0	7.23	81.4	60.7	7.26	86.5	53.1	7.27	91.9	45.3	7.28	95.4	39.2	7.29
	106	71.2	66.5	7.41	76.2	54.8	7.47	80.3	46.6	7.50	85.3	38.7	7.52	74.6	74.6	7.43	76.0	68.2	7.47	80.3	60.3	7.50	85.3	52.7	7.52	90.6	44.9	7.53	94.1	38.9	7.54
	110	70.1	65.8	7.72	74.7	54.0	7.79	78.7	46.1	7.82	83.7	38.3	7.84	73.5	73.5	7.74	74.6	67.2	7.79	78.7	59.6	7.82	83.7	52.1	7.84	88.9	44.5	7.86	92.3	38.5	7.88
	115	68.8	64.8	8.11	72.9	53.0	8.19	76.8	45.4	8.23	81.7	37.8	8.25	72.1	72.1	8.13	72.8	66.0	8.18	76.8	58.8	8.23	81.7	51.4	8.25	86.8	43.8	8.28	90.1	37.9	8.30
	118	68.0	64.3	8.34	71.8	52.4	8.42	75.7	45.0	8.47	80.5	37.4	8.50	71.2	71.2	8.37	71.7	65.2	8.42	75.7	58.2	8.47	80.5	50.9	8.50	85.5	43.4	8.53	88.7	37.6	8.55
	122																														
	23	86.8	80.0	3.42	96.4	69.5	3.43	101.6	55.1	3.35	108.0	45.8	3.21	91.0	91.0	3.43	96.2	86.5	3.43	101.6	71.2	3.35	108.0	62.3	3.21	114.7	53.1	3.06	119.1	46.0	2.96
	30	86.6	79.8	3.43	96.2	69.4	3.46	101.4	54.9	3.37	107.7	45.7	3.23	90.8	90.8	3.45	96.0	86.3	3.46	101.4	71.1	3.37	107.7	62.1	3.23	114.5	53.0	3.08	118.8	45.9	2.98
	40	86.3	79.5	3.46	95.9	69.1	3.50	101.0	54.8	3.41	107.4	45.5	3.27	90.5	90.5	3.47	95.7	86.0	3.50	101.0	70.8	3.41	107.4	61.9	3.27	114.1	52.8	3.11	118.4	45.7	3.02
	50	86.0	79.3	3.48	95.5	68.9	3.54	100.7	54.6	3.44	107.0	45.4	3.30	90.1	90.1	3.49	95.4	85.7	3.54	100.7	70.6	3.44	107.0	61.7	3.30	113.7	52.7	3.15	118.0	45.6	3.05
	54	85.9	79.1	3.49	95.4	68.8	3.43	100.6	54.5	3.38	106.9	45.3	3.32	90.0	90.0	3.50	95.2	85.6	3.43	100.6	70.5	3.38	106.9	61.6	3.32	113.5	52.6	3.26	117.9	45.5	3.22
	58	85.8	79.0	3.68	95.3	68.7	3.66	100.4	54.4	3.64	106.7	45.2	3.60	89.9	89.9	3.69	95.1	85.5	3.66	100.4	70.4	3.64	106.7	61.5	3.60	113.4	52.5	3.57	117.7	45.4	3.55
	62	85.1	78.4	3.99	94.4	68.4	3.98	99.5	54.2	3.96	105.7	45.0	3.93	89.2	89.2	4.01	94.2	85.1	3.98	99.5	70.1	3.96	105.7	61.2	3.93	112.3	52.3	3.91	116.6	45.2	3.89
	66	84.0	77.6	4.31	92.9	67.9	4.30	97.9	53.8	4.29	104.1	44.7	4.26	88.1	88.1	4.32	92.7	84.5	4.30	97.9	69.6	4.29	104.1	60.8	4.26	110.6	51.9	4.24	114.8	44.9	4.22
	70	82.9	76.9	4.62	91.4	65.4	4.62	96.4	53.4	4.61	102.4	44.4	4.59	86.9	86.9	4.64	91.3	81.3	4.62	96.4	69.1	4.61	102.4	60.4	4.59	108.8	51.5	4.57	112.9	44.6	4.56
	72	82.4	76.6	4.78	90.7	65.0	4.78	95.6	53.2	4.77	101.6	44.2	4.76	86.3	86.3	4.79	90.5	80.9	4.78	95.6	68.8	4.77	101.6	60.2	4.76	107.9	51.4	4.74	112.0	44.4	4.73
	75	81.6	76.0	5.01	89.6	64.4	5.02	94.4	52.9	5.02	100.4	44.0	5.00	85.5	85.5	5.03	89.4	80.1	5.02	94.4	68.5	5.02	100.4	59.8	5.00	106.6	51.1	4.99	110.7	44.2	4.98
2950	79	80.5	75.3	5.33	88.1	63.6	5.34	92.9	52.5	5.34	98.7	43.6	5.33	84.3	84.3	5.34	87.9	79.2	5.34	92.9	67.9	5.34	98.7	59.4	5.33	104.8	50.7	5.32	108.8	43.8	5.32
CFM	83	79.4	74.6	5.64	86.6	62.8	5.66	91.3	52.1	5.67	97.0	43.3	5.66	83.2	83.2	5.66	86.5	78.2	5.66	91.3	67.4	5.67	97.0	58.9	5.66	103.1	50.3	5.66	107.0	43.5	5.65
	87	78.3	73.9	5.95	85.2	62.0	5.98	89.8	51.6	5.99	95.4	42.9	5.99	82.0	82.0	5.97	85.0	77.2	5.98	89.8	66.8	5.99	95.4	58.4	5.99	101.3	49.8	5.99	105.2	43.1	5.99
	91	77.2	73.2	6.27	83.7	61.2	6.30	88.2	51.2	6.32	93.7	42.5	6.32	80.9	80.9	6.29	83.5	76.1	6.30	88.2	66.2	6.32	93.7	57.8	6.32	99.6	49.4	6.32	103.4	42.7	6.32
	93	76.6	72.8	6.42	82.9	60.8	6.46	87.4	50.9	6.48	92.9	42.3	6.48	80.3	80.3	6.44	82.8	75.6	6.46	87.4	65.9	6.48	92.9	57.6	6.48	98.7	49.1	6.49	102.4	42.5	6.49
	95	76.1	72.4	6.58	82.2	60.4	6.62	86.6	50.7	6.64	92.1	42.1	6.65	79.7	79.7	6.60	82.0	75.1	6.62	86.6	65.6	6.64	92.1	57.3	6.65	97.8	48.9	6.65	101.5	42.3	6.66
	99	75.0	71.7	6.89	80.7	59.5	6.94	85.1	50.2	6.97	90.4	41.7	6.98	78.6	78.6	6.92	80.6	74.1	6.94	85.1	64.9	6.97	90.4	56.8	6.98	96.1	48.4	6.99	99.7	41.9	6.99
	103	73.9	71.0	7.21	79.2	58.7	7.26	83.5	49.7	7.29	88.8	41.3	7.31	77.4	77.4	7.23	79.1	73.0	7.26	83.5	64.3	7.29	88.8	56.2	7.31	94.3	48.0	7.32	97.9	41.5	7.33
	106	73.0	70.4	7.44	78.1	58.0	7.51	82.4	49.3	7.54	87.5	41.0	7.55	76.5	76.5	7.47	78.0	72.2	7.50	82.4	63.8	7.54	87.5	55.7	7.55	93.0	47.6	7.57	96.5	41.2	7.58
	110	71.9	69.6	7.76	76.7	57.2	7.83	80.8	48.8	7.86	85.9	40.5	7.88	75.4	75.4	7.78	76.5	71.2	7.82	80.8	63.1	7.86	85.9	55.1	7.88	91.2	47.1	7.90	94.7	40.7	7.92
	115	70.6	68.6	8.15	74.8	56.1	8.23	78.8	48.1	8.27	83.8	40.0	8.29	74.0	74.0	8.17	74.7	69.8	8.23	78.8	62.2	8.27	83.8	54.4	8.29	89.0	46.4	8.32	92.4	40.2	8.34
	118	69.7	68.0	8.38	73.7	55.4	8.47	77.7	47.7	8.51	82.6	39.6	8.54	73.1	73.1	8.41	73.6	69.0	8.47	77.7	61.7	8.51	82.6	53.9	8.54	87.7	46.0	8.57	91.0	39.8	8.59
	122																														
	23	88.5	84.0	3.43	98.3	73.0	3.45	103.6	57.8	3.36	110.1	48.0	3.22	92.7	92.7	3.44	98.1	90.8	3.45	103.6	74.8	3.36	110.1	65.3	3.22	116.9	55.8	3.07	121.4	48.3	2.97
	30	88.3	83.8	3.45	98.0	72.8	3.48	103.3	57.7	3.39	109.8	47.9	3.25	92.5	92.5	3.46	97.8	90.6	3.48	103.3	74.6	3.39	109.8	65.2	3.25	116.6	55.6	3.09	121.1	48.2	3.00
	40	88.0	83.5	3.47	97.7	72.6	3.51	103.0	57.5	3.42	109.4	47.8	3.28	92.2	92.2	3.48	97.5	90.3	3.51	103.0	74.3	3.42	109.4	65.0	3.28	116.3	55.5	3.13	120.7	48.0	3.03
	50	87.7	83.2	3.49	97.4	72.3	3.55	102.6	57.3	3.46	109.1	47.6	3.32	91.9	91.9	3.51	97.2	90.0	3.55	102.6	74.1	3.46	109.1	64.8	3.32	115.9	55.3	3.16	120.3	47.8	3.06
	54	87.5	83.1	3.50	97.2	72.2	3.44	102.5	57.2	3.39	108.9	47.6	3.33	91.7	91.7	3.52	97.1	89.9	3.44	102.5	74.0	3.39	108.9	64.7	3.33	115.7	55.2	3.27	120.1	47.8	3.23
	58	87.4	83.0	3.70	97.1	72.1	3.67	102.4	57.1	3.65	108.8	47.5	3.62	91.6	91.6	3.71	96.9	89.8	3.67	102.4	73.9	3.65	108.8	64.6	3.62	115.6	55.1	3.59	120.0	47.7	3.57
	62	86.8	82.3	4.01	96.2	71.8	4.00	101.4	56.8	3.98	107.8	47.3	3.95	90.9	90.9	4.02	96.0	89.3	4.00	101.4	73.5	3.98	107.8	64.3	3.95	114.5	54.9	3.92	118.8	47.5	3.90
	66	85.6	81.4	4.33	94.7	71.3	4.32	99.8	56.5	4.30	106.1	46.9	4.28	89.8	89.8	4.34	94.5	88.7	4.32	99.8	73.0	4.30	106.1	63.8	4.28	112.7	54.5	4.26	117.0	47.1	4.24
	70	84.5	80.7	4.64	93.2	68.6	4.64	98.2	56.1	4.63	104.4	46.6	4.61	88.6	88.6	4.66	93.0	85.4	4.64	98.2	72.5	4.63	104.4	63.4	4.61	110.9	54.1	4.59	115.1	46.8	4.58
	72	84.0	80.4	4.80	92.4	68.2	4.80	97.4	55.9	4.79	103.5	46.4	4.78	88.0	88.0	4.81	92.3	84.9	4.80	97.4	72.3	4.79	103.5	63.1	4.78	110.0	53.9	4.76	114.2	46.6	4.75
	75	83.1	79.8	5.03	91.3	67.6	5.04	96.2	55.5	5.04	102.3	46.2	5.02	87.1	87.1	5.05	91.1	84.1	5.04	96.2	71.8	5.04	102.3	62.8	5.02	108.6	53.6	5.01	112.8	46.4	5.00
3350	79	82.0	79.1	5.35	89.8	66.7	5.36	94.6	55.1	5.37	100.6	45.8	5.35	85.9	85.9	5.37	89.6	83.1	5.36	94.6	71.3	5.37	100.6	62.3	5.35	106.9	53.2	5.34	110.9	46.0	5.34
CFM	83	80.9	78.3	5.66	88.3	65.9	5.69	93.1	54.7	5.69	98.9	45.4	5.69	84.8	84.8	5.68	88.1	82.0	5.69	93.1	70.7	5.69	98.9	61.8	5.69	105.1	52.7	5.68	109.1	45.6	5.67
	87	79.8	77.6	5.98	86.8	65.1	6.01	91.5	54.2	6.02	97.2	45.0	6.02	83.6	83.6	6.00	86.6	81.0	6.01	91.5	70.1	6.02	97.2	61.3	6.02	103.3	52.3	6.01	107.2	45.2	6.01
	91	78.6	76.8	6.29	85.3	64.2	6.33	89.9	53.7	6.34	95.5	44.6	6.35	82.4	82.4	6.31	85.1	79.9	6.33	89.9	69.5	6.34	95.5	60.7	6.35	101.5	51.8	6.35	105.3	44.8	6.35
	93	78.1	76.4	6.45	84.5	63.8	6.49	89.1	53.5	6.51	94.7	44.4	6.51	81.8	81.8	6.47	84.4	79.4	6.49	89.1	69.2	6.51	94.7	60.4	6.51	100.6	51.6	6.52	104.4	44.6	6.52
	95	77.5	76.0	6.61	83.8	63.3	6.65	88.3	53.2	6.67	93.8	44.2	6.68	81.2	81.2	6.63	83.6	78.8	6.65	88.3	68.8	6.67	93.8	60.1	6.68	99.7	51.3	6.68	103.5	44.4	6.69
	99	76.4	75.3	6.92	82.3	62.5	6.97	86.7	52.7	7.00	92.2	43.8	7.01	80.1	80.1	6.95	82.1	77.8	6.97	86.7	68.2	7.00	92.2	59.6	7.01	97.9	50.8	7.02	101.6	44.0	7.02
	103	75.3	74.5	7.24	80.8	61.6	7.30	85.1	52.2	7.32	90.5	43.4	7.34	78.9	78.9	7.26	80.6	76.6	7.29	85.1	67.5	7.32	90.5	59.0	7.34	96.1	50.3	7.35	99.8	43.6	7.36
	106	74.4	73.9	7.47	79.6	60.9	7.54	83.9	51.7	7.57	89.2	43.0	7.59	78.0	78.0	7.50	79.5	75.8	7.54	83.9	66.9	7.57	89.2	58.5	7.59	94.8	49.9	7.60	98.4	43.2	7.61
	110	73.3	73.1	7.79	78.1	60.0	7.86	82.3	51.2	7.90	87.5	42.6	7.92	76.8	76.8	7.81	78.0	74.7	7.86	82.3	66.2	7.90	87.5	57.9	7.92	93.0	49.4	7.94	96.5	42.7	7.95
	115	71.9	72.0	8.18	76.2	58.9	8.26	80.4	50.5	8.30	85.4	42.0	8.33	75.4	75.4	8.21	76.1	73.3	8.26	80.4	65.3	8.30	85.4	57.1	8.33	90.7	48.7	8.36	94.2	42.1	8.37
	118	71.1	71.4	8.42	75.1	58.2	8.50	79.2	50.0	8.55	84.1	41.6	8.58	74.5	74.5	8.45	75.0	72.4	8.50	79.2	64.7	8.55	84.1	56.5	8.58	89.4	48.3	8.61	92.8	41.8	8.63
	122																														

TC: Evaporator Total Capacity (1,000 BTU/h) Net TC = TC - Blower input

SC: Evaporator Sensible Capacity(1,000 BTU/h) Net SC = SC - Blower input

PI: Power input(kW) Compressor + outdoor fan System PI = PI + Blower input

Note: TC and SC represent the evaporator's heat load and do not account for the blower input. To calculate the net capacity, subtract the blower input from each value.

is shown as reference data

The blank areas indicate that operation at this compressor speed is not possible under those conditions.

ID DB		80																				
ID WB		57			61			64			67			70			72			75		
ID CFM	OD DB	TC	SC	PI	TC	SC	PI	TC	SC	PI	TC	SC	PI	TC	SC	PI	TC	SC	PI	TC	SC	PI
	23	94.3	94.3	3.43	96.7	92.1	3.42	99.0	82.3	3.33	105.3	74.2	3.19	111.8	65.9	3.04	116.1	59.1	2.95	121.7	50.5	2.79
	30	94.0	94.0	3.44	96.5	91.9	3.45	98.8	82.1	3.35	105.0	74.0	3.22	111.6	65.8	3.07	115.8	59.0	2.97	121.6	50.4	2.82
	40	93.7	93.7	3.47	96.2	91.6	3.49	98.5	81.9	3.39	104.7	73.8	3.25	111.2	65.6	3.10	115.4	58.8	3.00	121.4	50.4	2.85
	50	93.4	93.4	3.49	95.9	91.3	3.53	98.2	81.6	3.43	104.3	73.5	3.29	110.8	65.3	3.13	115.0	58.6	3.03	121.3	50.3	2.88
	54	93.3	93.3	3.50	95.7	91.1	3.42	98.0	81.5	3.36	104.2	73.4	3.30	110.7	65.2	3.24	114.9	58.5	3.20	121.2	50.3	3.10
	58	93.1	93.1	3.69	95.6	91.0	3.65	97.9	81.4	3.62	104.0	73.3	3.59	110.5	65.2	3.55	114.7	58.4	3.53	121.2	50.3	3.44
	62	92.4	92.4	4.00	94.7	90.6	3.97	97.0	81.0	3.94	103.1	73.0	3.91	109.5	64.8	3.89	113.6	58.1	3.87	119.7	49.7	3.79
	66	91.2	91.2	4.32	93.2	89.9	4.29	95.4	80.4	4.26	101.4	72.5	4.24	107.8	64.4	4.22	111.9	57.7	4.20	117.8	49.0	4.13
	70	90.0	90.0	4.63	91.7	91.7	4.61	93.9	79.8	4.59	99.8	72.0	4.57	106.0	63.9	4.55	110.1	57.3	4.54	116.0	48.4	4.47
	72	89.5	89.5	4.79	91.0	91.0	4.77	93.2	79.5	4.75	99.0	71.7	4.73	105.2	63.7	4.72	109.2	57.1	4.70	115.1	48.1	4.65
	75	88.6	88.6	5.03	89.9	89.9	5.01	92.0	79.1	4.99	97.8	71.3	4.98	103.9	63.3	4.96	107.9	56.8	4.95	113.7	47.7	4.91
2550	79	87.4	87.4	5.34	88.4	88.4	5.33	90.5	78.5	5.32	96.2	70.7	5.31	102.2	62.9	5.30	106.1	56.3	5.29	111.8	47.1	5.25
CFM	83	86.2	86.2	5.65	86.9	86.9	5.65	89.0	77.8	5.64	94.6	70.2	5.63	100.5	62.3	5.63	104.3	55.9	5.62	109.9	46.6	5.59
	87	85.0	85.0	5.97	85.4	85.4	5.97	87.5	77.2	5.96	93.0	69.6	5.96	98.8	61.8	5.96	102.5	55.4	5.96	108.1	46.0	5.94
	91	83.8	83.8	6.28	84.0	84.0	6.28	86.0	76.5	6.29	91.4	68.9	6.29	97.0	61.3	6.29	100.7	54.9	6.29	106.2	45.4	6.28
	93	83.2	83.2	6.44	83.2	83.2	6.44	85.2	76.1	6.45	90.6	68.6	6.45	96.2	61.0	6.46	99.9	54.7	6.46	105.3	45.1	6.46
	95	82.6	82.6	6.60	82.5	82.5	6.60	84.4	75.8	6.61	89.7	68.3	6.62	95.3	60.7	6.62	99.0	54.4	6.63	104.4	44.8	6.63
	99	81.4	81.4	6.91	81.0	81.0	6.92	82.9	75.0	6.93	88.1	67.6	6.94	93.6	60.1	6.95	97.2	53.9	6.96	102.5	44.2	6.97
	103	80.2	80.2	7.23	79.5	79.5	7.24	81.4	74.3	7.26	86.5	67.0	7.27	91.9	59.5	7.28	95.4	53.3	7.29	100.7	43.5	7.32
	106	79.3	79.3	7.46	78.4	78.4	7.48	80.3	73.7	7.50	85.3	66.4	7.52	90.6	59.0	7.53	94.1	52.9	7.54	99.3	43.1	7.58
	110	78.1	78.1	7.78	76.9	76.9	7.80	78.7	72.9	7.82	83.7	65.7	7.84	88.9	58.4	7.86	92.3	52.3	7.88	97.4	42.4	7.92
	115	76.6	76.6	8.17	75.1	75.1	8.20	76.8	71.9	8.23	81.7	64.8	8.25	86.8	57.6	8.28	90.1	51.6	8.30	95.1	41.7	8.35
	118	75.7	75.7	8.40	73.9	73.9	8.44	75.7	71.2	8.47	80.5	64.2	8.50	85.5	57.1	8.53	88.7	51.1	8.55	93.7	41.2	8.61
	122																					
	23	96.7	96.7	3.44	99.3	97.5	3.44	101.6	87.1	3.35	108.0	78.5	3.21	114.7	69.8	3.06	119.1	62.5	2.96	124.8	53.4	2.81
	30	96.5	96.5	3.46	99.0	97.2	3.47	101.4	86.9	3.37	107.7	78.4	3.23	114.5	69.6	3.08	118.8	62.4	2.98	124.7	53.4	2.83
	40	96.1	96.1	3.48	98.7	96.9	3.51	101.0	86.6	3.41	107.4	78.1	3.27	114.1	69.4	3.11	118.4	62.2	3.02	124.6	53.3	2.86
	50	95.8	95.8	3.51	98.4	96.6	3.54	100.7	86.3	3.44	107.0	77.8	3.30	113.7	69.2	3.15	118.0	62.0	3.05	124.4	53.3	2.89
	54	95.7	95.7	3.52	98.2	96.5	3.44	100.6	86.2	3.38	106.9	77.7	3.32	113.5	69.1	3.26	117.9	61.9	3.22	124.4	53.2	3.11
	58	95.6	95.6	3.71	98.1	96.3	3.67	100.4	86.1	3.64	106.7	77.6	3.60	113.4	69.0	3.57	117.7	61.8	3.55	124.3	53.2	3.46
	62	94.8	94.8	4.02	97.2	95.9	3.99	99.5	85.7	3.96	105.7	77.2	3.93	112.3	68.6	3.91	116.6	61.5	3.89	122.8	52.6	3.80
	66	93.6	93.6	4.34	95.7	95.2	4.31	97.9	85.1	4.29	104.1	76.7	4.26	110.6	68.2	4.24	114.8	61.1	4.22	120.9	51.9	4.15
	70	92.4	92.4	4.66	94.1	94.1	4.63	96.4	84.5	4.61	102.4	76.2	4.59	108.8	67.7	4.57	112.9	60.7	4.56	119.0	51.3	4.50
	72	91.8	91.8	4.81	93.4	93.4	4.79	95.6	84.2	4.77	101.6	75.9	4.76	107.9	67.4	4.74	112.0	60.4	4.73	118.0	51.0	4.67
	75	90.9	90.9	5.05	92.2	92.2	5.03	94.4	83.7	5.02	100.4	75.5	5.00	106.6	67.1	4.99	110.7	60.1	4.98	116.6	50.5	4.93
2950	79	89.6	89.6	5.37	90.7	90.7	5.35	92.9	83.1	5.34	98.7	74.9	5.33	104.8	66.5	5.32	108.8	59.6	5.32	114.7	49.9	5.28
CFM	83	88.4	88.4	5.68	89.2	89.2	5.67	91.3	82.4	5.67	97.0	74.3	5.66	103.1	66.0	5.66	107.0	59.1	5.65	112.8	49.3	5.62
	87	87.2	87.2	6.00	87.7	87.7	6.00	89.8	81.7	5.99	95.4	73.6	5.99	101.3	65.4	5.99	105.2	58.6	5.99	110.9	48.7	5.97
	91	86.0	86.0	6.31	86.1	86.1	6.32	88.2	81.0	6.32	93.7	73.0	6.32	99.6	64.8	6.32	103.4	58.1	6.32	109.0	48.0	6.31
	93	85.3	85.3	6.47	85.4	85.4	6.48	87.4	80.6	6.48	92.9	72.6	6.48	98.7	64.5	6.49	102.4	57.8	6.49	108.0	47.7	6.49
	95	84.7	84.7	6.63	84.6	84.6	6.64	86.6	80.2	6.64	92.1	72.3	6.65	97.8	64.2	6.65	101.5	57.6	6.66	107.1	47.4	6.66
	99	83.5	83.5	6.95	83.1	83.1	6.96	85.1	79.4	6.97	90.4	71.6	6.98	96.1	63.6	6.99	99.7	57.0	6.99	105.2	46.7	7.01
	103	82.3	82.3	7.26	81.6	81.6	7.28	83.5	78.6	7.29	88.8	70.9	7.31	94.3	63.0	7.32	97.9	56.4	7.33	103.3	46.1	7.35
	106	81.4	81.4	7.50	80.4	80.4	7.52	82.4	78.0	7.54	87.5	70.3	7.55	93.0	62.5	7.57	96.5	56.0	7.58	101.8	45.6	7.61
	110	80.1	80.1	7.81	78.9	78.9	7.84	80.8	77.2	7.86	85.9	69.6	7.88	91.2	61.8	7.90	94.7	55.4	7.92	99.9	44.9	7.96
	115	78.6	78.6	8.21	77.0	77.0	8.24	78.8	76.1	8.27	83.8	68.6	8.29	89.0	60.9	8.32	92.4	54.6	8.34	97.6	44.1	8.39
	118	77.7	77.7	8.45	75.9	75.9	8.48	77.7	75.4	8.51	82.6	68.0	8.54	87.7	60.4	8.57	91.0	54.1	8.59	96.1	43.6	8.65
	122																					
	23	98.6	98.6	3.46	101.2	102.3	3.46	103.6	91.5	3.36	110.1	82.4	3.22	116.9	73.2	3.07	121.4	65.6	2.97	127.2	56.1	2.82
	30	98.3	98.3	3.47	100.9	102.1	3.48	103.3	91.2	3.39	109.8	82.2	3.25	116.6	73.1	3.09	121.1	65.5	3.00	127.1	56.0	2.84
	40	98.0	98.0	3.50	100.6	101.7	3.52	103.0	90.9	3.42	109.4	82.0	3.28	116.3	72.8	3.13	120.7	65.3	3.03	127.0	56.0	2.87
	50	97.7	97.7	3.52	100.2	101.4	3.56	102.6	90.6	3.46	109.1	81.7	3.32	115.9	72.6	3.16	120.3	65.1	3.06	126.8	55.9	2.90
	54	97.5	97.5	3.53	100.1	101.2	3.45	102.5	90.5	3.39	108.9	81.6	3.33	115.7	72.5	3.27	120.1	65.0	3.23	126.7	55.9	3.12
	58	97.4	97.4	3.72	100.0	101.1	3.68	102.4	90.4	3.65	108.8	81.5	3.62	115.6	72.4	3.59	120.0	64.9	3.57	126.7	55.9	3.47
	62	96.7	96.7	4.04	99.0	100.6	4.00	101.4	89.9	3.98	107.8	81.1	3.95	114.5	72.0	3.92	118.8	64.6	3.90	125.2	55.2	3.82
	66	95.4	95.4	4.36	97.5	99.9	4.33	99.8	89.3	4.30	106.1	80.5	4.28	112.7	71.5	4.26	117.0	64.1	4.24	123.2	54.4	4.17
	70	94.2	94.2	4.68	95.9	95.9	4.65	98.2	88.7	4.63	104.4	80.0	4.61	110.9	71.0	4.59	115.1	63.7	4.58	121.3	53.8	4.52
	72	93.5	93.5	4.83	95.2	95.2	4.81	97.4	88.4	4.79	103.5	79.7	4.78	110.0	70.8	4.76	114.2	63.4	4.75	120.3	53.5	4.69
	75	92.6	92.6	5.07	94.0	94.0	5.05	96.2	87.9	5.04	102.3	79.2	5.02	108.6	70.4	5.01	112.8	63.1	5.00	118.8	53.0	4.95
3350	79	91.3	91.3	5.39	92.4	92.4	5.38	94.6	87.2	5.37	100.6	78.6	5.35	106.9	69.8	5.34	110.9	62.6	5.34	116.9	52.4	5.30
CFM	83	90.1	90.1	5.71	90.9	90.9	5.70	93.1	86.5	5.69	98.9	77.9	5.69	105.1	69.3	5.68	109.1	62.1	5.67	115.0	51.7	5.65
	87	88.9	88.9	6.02	89.3	89.3	6.02	91.5	85.7	6.02	97.2	77.3	6.02	103.3	68.7	6.01	107.2	61.5	6.01	113.0	51.1	5.99
	91	87.6	87.6	6.34	87.8	87.8	6.34	89.9	85.0	6.34	95.5	76.6	6.35	101.5	68.1	6.35	105.3	61.0	6.35	111.1	50.4	6.34
	93	87.0	87.0	6.50	87.0	87.0	6.50	89.1	84.6	6.51	94.7	76.2	6.51	100.6	67.7	6.52	104.4	60.7	6.52	110.1	50.1	6.52
	95	86.4	86.4	6.66	86.2	86.2	6.67	88.3	84.2	6.67	93.8	75.9	6.68	99.7	67.4	6.68	103.5	60.4	6.69	109.1	49.7	6.69
	99	85.1	85.1	6.98	84.7	84.7	6.99	86.7	83.4	7.00	92.2	75.1	7.01	97.9	66.8	7.02	101.6	59.8	7.02	107.2	49.1	7.04
	103	83.9	83.9	7.29	83.1	83.1	7.31	85.1	82.5	7.32	90.5	74.4	7.34	96.1	66.1	7.35	99.8	59.2	7.36	105.3	48.4	7.38
	106	82.9	82.9	7.53	82.0	82.0	7.55	83.9	81.9	7.57	89.2	73.8	7.59	94.8	65.6	7.60	98.4	58.8	7.61	103.8	47.9	7.65
	110	81.7	81.7	7.85	80.4	80.4	7.88	82.3	81.0	7.90	87.5	73.0	7.92	93.0	64.9	7.94	96.5	58.1	7.95	101.9	47.2	7.99
	115	80.1	80.1	8.24	78.5	78.5	8.28	80.4	79.9	8.30	85.4	72.0	8.33	90.7	64.0	8.36	94.2	57.3	8.37	99.4	46.3	8.43
	118	79.2	79.2	8.48	77.3	77.3	8.52	79.2	79.1	8.55	84.1	71.3	8.58	89.4	63.4	8.61	92.8	56.8	8.63	98.0	45.7	8.69
	122																					

TC: Evaporator Total Capacity (1,000 BTU/h) Net TC = TC - Blower input

SC: Evaporator Sensible Capacity(1,000 BTU/h) Net SC = SC - Blower input

PI: Power input(kW) Compressor + outdoor fan System PI = PI + Blower input

Note: TC and SC represent the evaporator's heat load and do not account for the blower input. To calculate the net capacity, subtract the blower input from each value.

is shown as reference data

The blank areas indicate that operation at this compressor speed is not possible under those conditions.

ID DB		85																				
ID WB		57			61			64			67			70			72			75		
ID CFM	OD DB	TC	SC	PI	TC	SC	PI	TC	SC	PI	TC	SC	PI	TC	SC	PI	TC	SC	PI	TC	SC	PI
2550 CFM	23	99.9	99.9	3.44	102.6	97.6	3.44	102.3	91.5	3.34	105.3	89.3	3.19	111.8	81.4	3.04	116.1	74.6	2.95	121.7	66.3	2.79
	30	99.7	99.7	3.46	102.3	97.4	3.47	102.1	91.3	3.36	105.0	89.0	3.22	111.6	81.2	3.07	115.8	74.4	2.97	121.6	66.3	2.82
	40	99.4	99.4	3.48	102.0	97.1	3.51	101.7	91.0	3.40	104.7	88.8	3.25	111.2	80.9	3.10	115.4	74.1	3.00	121.4	66.2	2.85
	50	99.0	99.0	3.51	101.6	96.7	3.54	101.4	90.7	3.44	104.3	88.5	3.29	110.8	80.7	3.13	115.0	73.9	3.03	121.3	66.1	2.88
	54	98.9	98.9	3.52	101.5	96.6	3.44	101.3	90.6	3.37	104.2	88.3	3.30	110.7	80.6	3.24	114.9	73.8	3.20	121.2	66.1	3.10
	58	98.7	98.7	3.71	101.4	96.5	3.67	101.1	90.5	3.63	104.0	88.2	3.59	110.5	80.5	3.55	114.7	73.7	3.53	121.2	66.1	3.44
	62	98.0	98.0	4.02	100.4	96.0	3.99	100.2	90.0	3.95	103.1	87.8	3.91	109.5	80.1	3.89	113.6	73.3	3.87	119.7	65.3	3.79
	66	96.7	96.7	4.34	98.8	95.4	4.31	98.6	89.4	4.28	101.4	87.2	4.24	107.8	79.5	4.22	111.9	72.8	4.20	117.8	64.4	4.13
	70	95.5	95.5	4.66	97.3	97.3	4.63	97.0	88.8	4.60	99.8	86.6	4.57	106.0	79.0	4.55	110.1	72.3	4.54	116.0	63.6	4.47
	72	94.8	94.8	4.81	96.5	96.5	4.79	96.3	88.4	4.76	99.0	86.3	4.73	105.2	78.7	4.72	109.2	72.1	4.70	115.1	63.3	4.65
	75	93.9	93.9	5.05	95.3	95.3	5.03	95.1	87.9	5.01	97.8	85.8	4.98	103.9	78.2	4.96	107.9	71.7	4.95	113.7	62.7	4.91
	79	92.6	92.6	5.37	93.7	93.7	5.35	93.5	87.3	5.33	96.2	85.1	5.31	102.2	77.6	5.30	106.1	71.1	5.29	111.8	61.9	5.25
	83	91.4	91.4	5.68	92.2	92.2	5.67	91.9	86.5	5.66	94.6	84.4	5.63	100.5	77.0	5.63	104.3	70.5	5.62	109.9	61.2	5.59
	87	90.1	90.1	6.00	90.6	90.6	5.99	90.4	85.8	5.98	93.0	83.7	5.96	98.8	76.3	5.96	102.5	69.9	5.96	108.1	60.4	5.94
	91	88.8	88.8	6.31	89.0	89.0	6.32	88.8	85.0	6.30	91.4	82.9	6.29	97.0	75.6	6.29	100.7	69.3	6.29	106.2	59.6	6.28
	93	88.2	88.2	6.47	88.2	88.2	6.48	88.0	84.6	6.47	90.6	82.6	6.45	96.2	75.3	6.46	99.9	69.0	6.46	105.3	59.2	6.46
	95	87.6	87.6	6.63	87.4	87.4	6.64	87.2	84.2	6.63	89.7	82.2	6.62	95.3	74.9	6.62	99.0	68.6	6.63	104.4	58.8	6.63
	99	86.3	86.3	6.95	85.9	85.9	6.96	85.7	85.7	6.95	88.1	81.4	6.94	93.6	74.2	6.95	97.2	68.0	6.96	102.5	58.0	6.97
	103	85.0	85.0	7.26	84.3	84.3	7.28	84.1	84.1	7.28	86.5	80.5	7.27	91.9	73.5	7.28	95.4	67.3	7.29	100.7	57.2	7.32
	106	84.1	84.1	7.50	83.1	83.1	7.52	82.9	82.9	7.52	85.3	79.9	7.52	90.6	72.9	7.53	94.1	66.8	7.54	99.3	56.6	7.58
	110	82.8	82.8	7.81	81.5	81.5	7.84	81.4	81.4	7.85	83.7	79.0	7.84	88.9	72.1	7.86	92.3	66.0	7.88	97.4	55.8	7.92
	115	81.2	81.2	8.21	79.6	79.6	8.24	79.4	79.4	8.25	81.7	77.9	8.25	86.8	71.1	8.28	90.1	65.1	8.30	95.1	54.7	8.35
	118	80.3	80.3	8.45	78.4	78.4	8.48	78.2	78.2	8.50	80.5	77.2	8.50	85.5	70.5	8.53	88.7	64.5	8.55	93.7	54.1	8.61
	122																					
2950 CFM	23	102.5	102.5	3.46	105.2	103.3	3.46	105.0	96.9	3.36	108.0	94.5	3.21	114.7	86.2	3.06	119.1	78.9	2.96	124.8	70.2	2.81
	30	102.3	102.3	3.48	105.0	103.1	3.49	104.7	96.7	3.38	107.7	94.3	3.23	114.5	86.0	3.08	118.8	78.7	2.98	124.7	70.2	2.83
	40	101.9	101.9	3.50	104.6	102.8	3.52	104.4	96.3	3.42	107.4	93.9	3.27	114.1	85.7	3.11	118.4	78.5	3.02	124.6	70.1	2.86
	50	101.6	101.6	3.52	104.3	102.4	3.56	104.0	96.0	3.45	107.0	93.6	3.30	113.7	85.4	3.15	118.0	78.2	3.05	124.4	70.0	2.89
	54	101.4	101.4	3.53	104.1	102.3	3.45	103.9	95.9	3.39	106.9	93.5	3.32	113.5	85.3	3.26	117.9	78.1	3.22	124.4	70.0	3.11
	58	101.3	101.3	3.73	104.0	102.1	3.68	103.8	95.7	3.65	106.7	93.4	3.60	113.4	85.2	3.57	117.7	78.0	3.55	124.3	69.9	3.46
	62	100.5	100.5	4.04	103.0	101.6	4.01	102.8	95.3	3.97	105.7	92.9	3.93	112.3	84.7	3.91	116.6	77.6	3.89	122.8	69.1	3.80
	66	99.2	99.2	4.36	101.4	100.9	4.33	101.2	94.6	4.30	104.1	92.3	4.26	110.6	84.2	4.24	114.8	77.1	4.22	120.9	68.1	4.15
	70	98.0	98.0	4.68	99.8	99.8	4.65	99.6	94.0	4.62	102.4	91.6	4.59	108.8	83.6	4.57	112.9	76.6	4.56	119.0	67.4	4.50
	72	97.3	97.3	4.84	99.0	99.0	4.81	98.8	93.6	4.79	101.6	91.3	4.76	107.9	83.3	4.74	112.0	76.3	4.73	118.0	67.0	4.67
	75	96.3	96.3	5.08	97.8	97.8	5.06	97.6	93.1	5.03	100.4	90.8	5.00	106.6	82.8	4.99	110.7	75.8	4.98	116.6	66.4	4.93
	79	95.0	95.0	5.39	96.2	96.2	5.38	95.9	92.4	5.36	98.7	90.1	5.33	104.8	82.2	5.32	108.8	75.3	5.32	114.7	65.6	5.28
	83	93.7	93.7	5.71	94.6	94.6	5.70	94.3	91.6	5.68	97.0	89.3	5.66	103.1	81.5	5.66	107.0	74.6	5.65	112.8	64.8	5.62
	87	92.4	92.4	6.03	92.9	92.9	6.02	92.7	90.8	6.01	95.4	88.6	5.99	101.3	80.8	5.99	105.2	74.0	5.99	110.9	63.9	5.97
	91	91.1	91.1	6.35	91.3	91.3	6.35	91.1	90.0	6.34	93.7	87.8	6.32	99.6	80.1	6.32	103.4	73.3	6.32	109.0	63.1	6.31
	93	90.5	90.5	6.50	90.5	90.5	6.51	90.3	89.6	6.50	92.9	87.4	6.48	98.7	79.7	6.49	102.4	73.0	6.49	108.0	62.7	6.49
	95	89.8	89.8	6.66	89.7	89.7	6.67	89.5	89.2	6.66	92.1	87.0	6.65	97.8	79.3	6.65	101.5	72.7	6.66	107.1	62.3	6.66
	99	88.5	88.5	6.98	88.1	88.1	6.99	87.9	87.9	6.99	90.4	86.1	6.98	96.1	78.6	6.99	99.7	72.0	6.99	105.2	61.4	7.01
	103	87.2	87.2	7.30	86.5	86.5	7.32	86.3	86.3	7.31	88.8	85.3	7.31	94.3	77.8	7.32	97.9	71.2	7.33	103.3	60.6	7.35
	106	86.3	86.3	7.54	85.3	85.3	7.56	85.1	85.1	7.56	87.5	84.6	7.55	93.0	77.2	7.57	96.5	70.7	7.58	101.8	59.9	7.61
	110	85.0	85.0	7.85	83.7	83.7	7.88	83.5	83.5	7.89	85.9	83.7	7.88	91.2	76.3	7.90	94.7	69.9	7.92	99.9	59.0	7.96
	115	83.3	83.3	8.25	81.6	81.6	8.28	81.5	81.5	8.29	83.8	82.5	8.29	89.0	75.2	8.32	92.4	68.9	8.34	97.6	57.9	8.39
	118	82.4	82.4	8.49	80.4	80.4	8.53	80.3	80.3	8.54	82.6	81.8	8.54	87.7	74.6	8.57	91.0	68.3	8.59	96.1	57.3	8.65
	122																					
3350 CFM	23	104.5	104.5	3.48	107.2	108.5	3.47	107.0	101.7	3.37	110.1	99.2	3.22	116.9	90.4	3.07	121.4	82.8	2.97	127.2	73.7	2.82
	30	104.2	104.2	3.49	107.0	108.2	3.50	106.7	101.4	3.40	109.8	98.9	3.25	116.6	90.2	3.09	121.1	82.7	3.00	127.1	73.6	2.84
	40	103.9	103.9	3.52	106.6	107.9	3.54	106.4	101.1	3.43	109.4	98.6	3.28	116.3	89.9	3.13	120.7	82.4	3.03	127.0	73.6	2.87
	50	103.5	103.5	3.54	106.3	107.5	3.58	106.0	100.8	3.47	109.1	98.3	3.32	115.9	89.6	3.16	120.3	82.1	3.06	126.8	73.5	2.90
	54	103.4	103.4	3.55	106.1	107.3	3.47	105.9	100.6	3.40	108.9	98.1	3.33	115.7	89.5	3.27	120.1	82.0	3.23	126.7	73.4	3.12
	58	103.2	103.2	3.74	106.0	107.2	3.70	105.7	100.5	3.66	108.8	98.0	3.62	115.6	89.4	3.59	120.0	81.9	3.57	126.7	73.4	3.47
	62	102.5	102.5	4.06	105.0	106.7	4.02	104.7	100.0	3.99	107.8	97.5	3.95	114.5	88.9	3.92	118.8	81.5	3.90	125.2	72.5	3.82
	66	101.1	101.1	4.38	103.3	105.9	4.35	103.1	99.3	4.32	106.1	96.9	4.28	112.7	88.3	4.26	117.0	80.9	4.24	123.2	71.5	4.17
	70	99.8	99.8	4.70	101.7	101.7	4.67	101.5	98.6	4.64	104.4	96.2	4.61	110.9	87.7	4.59	115.1	80.4	4.58	121.3	70.7	4.52
	72	99.2	99.2	4.86	100.9	100.9	4.83	100.6	98.3	4.81	103.5	95.8	4.78	110.0	87.4	4.76	114.2	80.1	4.75	120.3	70.3	4.69
	75	98.2	98.2	5.10	99.7	99.7	5.08	99.4	97.7	5.05	102.3	95.3	5.02	108.6	86.9	5.01	112.8	79.6	5.00	118.8	69.7	4.95
	79	96.8	96.8	5.42	98.0	98.0	5.40	97.8	96.9	5.38	100.6	94.5	5.35	106.9	86.2	5.34	110.9	79.0	5.34	116.9	68.8	5.30
	83	95.5	95.5	5.73	96.4	96.4	5.73	96.1	96.1	5.71	98.9	93.8	5.69	105.1	85.5	5.68	109.1	78.3	5.67	115.0	68.0	5.65
	87	94.2	94.2	6.05	94.7	94.7	6.05	94.5	95.3	6.04	97.2	93.0	6.02	103.3	84.8	6.01	107.2	77.7	6.01	113.0	67.1	5.99
	91	92.9	92.9	6.37	93.1	93.1	6.37	92.9	94.5	6.36	95.5	92.1	6.35	101.5	84.0	6.35	105.3	77.0	6.35	111.1	66.2	6.34
	93	92.2	92.2	6.53	92.3	92.3	6.54	92.0	94.0	6.53	94.7	91.7	6.51	100.6	83.6	6.52	104.4	76.6	6.52	110.1	65.8	6.52
	95	91.6	91.6	6.69	91.4	91.4	6.70	91.2	93.6	6.69	93.8	91.3	6.68	99.7	83.3	6.68	103.5	76.3	6.69	109.1	65.4	6.69
	99	90.2	90.2	7.01	89.8	89.8	7.02	89.6	89.6	7.02	92.2	90.4	7.01	97.9	82.4	7.02	101.6	75.5	7.02	107.2	64.5	7.04
	103	88.9	88.9	7.33	88.1	88.1	7.35	87.9	87.9	7.35	90.5	89.5	7.34	96.1	81.6	7.35	99.8	74.8	7.36	105.3	63.6	7.38
	106	87.9	87.9	7.57	86.9	86.9	7.59	86.7	86.7	7.59	89.2	88.8	7.59	94.8	81.0	7.60	98.4	74.2	7.61	103.8	62.9	7.65
	110	86.6	86.6	7.89	85.3	85.3	7.91	85.1	85.1	7.92	87.5	87.8	7.92	93.0	80.1	7.94	96.5	73.4	7.95	101.9	62.0	7.99
	115	84.9	84.9	8.29	83.2	83.2	8.32	83.0	83.0	8.33	85.4	86.6	8.33	90.7	79.0	8.36	94.2	72.3	8.37	99.4	60.8	8.43
	118	83.9	83.9	8.52	82.0	82.0	8.56	81.8	81.8	8.57	84.1	85.8	8.58	89.4	78.3	8.61	92.8	71.7	8.63	98.0	60.1	8.69
	122																					

TC: Evaporator Total Capacity (1,000 BTU/h) Net TC = TC - Blower input

SC: Evaporator Sensible Capacity(1,000 BTU/h) Net SC = SC - Blower input

PI: Power input(kW) Compressor + outdoor fan System PI = PI + Blower input

Note: TC and SC represent the evaporator's heat load and do not account for the blower input. To calculate the net capacity, subtract the blower input from each value.

is shown as reference data

The blank areas indicate that operation at this compressor speed is not possible under those conditions.

ID DB		70												75																	
ID WB		57			61			64			67			57			61			64			67			70			72		
ID CFM	OD DB	TC	SC	PI	TC	SC	PI	TC	SC	PI	TC	SC	PI	TC	SC	PI	TC	SC	PI	TC	SC	PI	TC	SC	PI	TC	SC	PI	TC	SC	PI
	23	92.3	79.6	4.23	100.8	67.6	4.28	108.8	56.5	4.13	114.6	47.2	4.01	95.0	95.0	4.24	99.7	82.5	4.27	108.8	72.0	4.13	114.6	62.8	4.01	121.9	54.3	3.84	126.2	47.3	3.74
	30	92.2	79.4	4.25	100.6	67.5	4.30	108.6	56.4	4.15	114.4	47.1	4.02	94.8	94.8	4.26	99.5	82.3	4.29	108.6	71.9	4.15	114.4	62.7	4.02	121.6	54.2	3.85	126.0	47.3	3.76
	40	91.9	79.2	4.28	100.3	67.3	4.33	108.3	56.2	4.17	114.0	47.0	4.05	94.5	94.5	4.29	99.2	82.1	4.32	108.3	71.7	4.17	114.0	62.5	4.05	121.3	54.0	3.88	125.6	47.1	3.78
	50	91.6	78.9	4.31	100.0	67.1	4.36	107.9	56.1	4.16	113.7	46.8	4.07	94.3	94.3	4.32	98.9	81.8	4.35	107.9	71.5	4.16	113.7	62.3	4.07	120.9	53.9	3.92	125.2	47.0	3.83
	54	91.5	78.8	4.32	99.9	67.0	4.37	107.8	56.0	4.26	113.6	46.8	4.21	94.1	94.1	4.34	98.8	81.7	4.37	107.8	71.4	4.26	113.6	62.3	4.21	120.8	53.8	4.14	125.1	46.9	4.10
	58	91.1	78.5	4.42	99.5	66.7	4.48	107.3	55.8	4.54	113.1	46.6	4.57	93.8	93.8	4.44	98.4	81.4	4.47	107.3	71.1	4.54	113.1	62.0	4.57	120.3	53.6	4.52	124.6	46.7	4.48
	62	90.1	77.7	4.78	98.3	66.1	4.84	105.8	55.4	4.91	111.5	46.3	4.94	92.7	92.7	4.80	97.2	80.6	4.84	105.8	70.5	4.91	111.5	61.5	4.94	118.5	53.2	4.89	122.8	46.4	4.86
	66	89.0	77.0	5.15	97.1	65.5	5.21	104.3	55.0	5.27	109.8	45.9	5.30	91.6	91.6	5.17	96.1	79.9	5.20	104.3	70.1	5.27	109.8	61.1	5.30	116.8	52.8	5.26	121.0	46.1	5.24
	70	87.9	76.4	5.51	96.0	64.9	5.58	102.7	54.6	5.64	108.2	45.6	5.66	90.5	90.5	5.53	94.9	79.1	5.57	102.7	69.5	5.64	108.2	60.7	5.66	115.1	52.4	5.64	119.2	45.7	5.62
	72	87.4	76.0	5.69	95.4	64.6	5.76	101.9	54.4	5.82	107.4	45.4	5.85	89.9	89.9	5.71	94.3	78.8	5.75	101.9	69.3	5.82	107.4	60.5	5.85	114.2	52.2	5.82	118.3	45.6	5.81
	75	86.6	75.5	5.96	94.5	64.1	6.04	100.8	54.1	6.09	106.2	45.2	6.12	89.1	89.1	5.98	93.5	78.2	6.03	100.8	68.9	6.09	106.2	60.1	6.12	112.9	51.9	6.10	116.9	45.3	6.09
2550	79	85.5	74.8	6.32	93.3	63.5	6.40	99.2	53.6	6.46	104.6	44.8	6.48	88.0	88.0	6.35	92.3	77.5	6.39	99.2	68.4	6.46	104.6	59.6	6.48	111.2	51.5	6.48	115.2	44.9	6.48
CFM	83	84.4	74.1	6.69	92.2	62.9	6.77	97.7	53.2	6.82	102.9	44.5	6.85	86.9	86.9	6.71	91.1	76.8	6.76	97.7	67.8	6.82	102.9	59.2	6.85	109.4	51.1	6.85	113.4	44.6	6.86
	87	83.3	73.3	7.05	91.0	62.3	7.14	96.2	52.8	7.19	101.3	44.1	7.21	85.8	85.8	7.08	90.0	76.0	7.12	96.2	67.2	7.19	101.3	58.7	7.21	107.7	50.7	7.23	111.6	44.2	7.24
	91	82.3	72.6	7.41	89.8	61.7	7.50	94.6	52.3	7.55	99.7	43.7	7.58	84.7	84.7	7.44	88.8	75.3	7.49	94.6	66.6	7.55	99.7	58.1	7.58	106.0	50.2	7.60	109.8	43.8	7.62
	93	81.7	72.3	7.59	89.2	61.4	7.69	93.8	52.1	7.74	98.9	43.5	7.76	84.1	84.1	7.62	88.2	74.9	7.67	93.8	66.3	7.74	98.9	57.9	7.76	105.1	50.0	7.79	108.9	43.6	7.81
	95	81.2	71.9	7.77	88.6	61.1	7.87	93.1	51.8	7.92	98.1	43.3	7.94	83.6	83.6	7.80	87.7	74.5	7.86	93.1	66.0	7.92	98.1	57.6	7.94	104.3	49.8	7.97	108.0	43.4	8.00
	99	80.1	71.2	8.14	87.5	60.5	8.24	91.5	51.3	8.28	96.4	42.9	8.30	82.5	82.5	8.17	86.5	73.8	8.22	91.5	65.4	8.28	96.4	57.1	8.30	102.5	49.3	8.35	106.2	43.0	8.38
	103	79.0	70.4	8.50	86.3	59.8	8.60	90.0	50.8	8.65	94.8	42.5	8.67	81.3	81.3	8.53	85.3	73.0	8.59	90.0	64.8	8.65	94.8	56.5	8.67	100.8	48.8	8.72	104.4	42.6	8.76
	106	78.2	69.9	8.77	85.4	59.4	8.88	88.8	50.5	8.92	93.6	42.1	8.94	80.5	80.5	8.80	84.5	72.4	8.86	88.8	64.3	8.92	93.6	56.1	8.94	99.5	48.5	9.00	103.1	42.3	9.04
	110	77.2	69.1	9.13	84.2	58.7	9.24	87.3	49.9	9.29	92.0	41.7	9.31	79.4	79.4	9.17	83.3	71.6	9.23	87.3	63.6	9.29	92.0	55.5	9.31	97.8	48.0	9.38	101.3	41.8	9.43
	115	75.8	68.2	9.58	82.8	57.9	9.70	85.4	49.3	9.74	89.9	41.2	9.76	78.0	78.0	9.62	81.9	70.6	9.69	85.4	62.8	9.74	89.9	54.8	9.76	95.6	47.3	9.84	99.0	41.3	9.90
	118	75.0	67.6	9.86	81.9	57.4	9.98	84.2	48.9	10.02	88.7	40.8	10.03	77.2	77.2	9.89	81.0	70.1	9.96	84.2	62.2	10.02	88.7	54.3	10.03	94.3	46.9	10.13	97.7	40.9	10.19
	122																														
	23	95.0	84.1	4.27	103.7	71.5	4.33	111.9	59.7	4.18	117.9	49.9	4.05	97.8	97.8	4.29	102.6	87.2	4.32	111.9	76.1	4.18	117.9	66.4	4.05	125.4	57.4	3.88	129.9	50.0	3.78
	30	94.8	83.9	4.29	103.5	71.3	4.35	111.7	59.6	4.20	117.7	49.8	4.07	97.6	97.6	4.31	102.4	87.0	4.34	111.7	76.0	4.20	117.7	66.3	4.07	125.1	57.3	3.90	129.6	49.9	3.80
	40	94.5	83.7	4.32	103.2	71.1	4.38	111.4	59.4	4.22	117.3	49.7	4.09	97.3	97.3	4.34	102.0	86.7	4.37	111.4	75.7	4.22	117.3	66.1	4.09	124.8	57.1	3.92	129.2	49.8	3.82
	50	94.2	83.4	4.35	102.9	70.9	4.41	111.1	59.3	4.20	117.0	49.5	4.12	97.0	97.0	4.37	101.7	86.5	4.40	111.1	75.5	4.20	117.0	65.9	4.12	124.4	56.9	3.97	128.9	49.6	3.87
	54	94.1	83.3	4.37	102.7	70.8	4.42	110.9	59.2	4.30	116.9	49.4	4.25	96.9	96.9	4.38	101.6	86.4	4.41	110.9	75.4	4.30	116.9	65.8	4.25	124.3	56.9	4.19	128.7	49.6	4.14
	58	93.8	83.0	4.47	102.4	70.5	4.52	110.4	58.9	4.59	116.3	49.2	4.62	96.5	96.5	4.49	101.2	86.0	4.52	110.4	75.1	4.59	116.3	65.5	4.62	123.7	56.6	4.56	128.1	49.4	4.53
	62	92.7	82.1	4.84	101.1	69.8	4.90	108.9	58.5	4.96	114.7	48.9	4.99	95.4	95.4	4.85	100.0	85.1	4.89	108.9	74.5	4.96	114.7	65.0	4.99	121.9	56.2	4.94	126.3	49.0	4.91
	66	91.5	81.4	5.20	99.9	69.2	5.27	107.3	58.1	5.33	113.0	48.5	5.36	94.2	94.2	5.22	98.8	84.4	5.26	107.3	74.0	5.33	113.0	64.6	5.36	120.2	55.8	5.32	124.5	48.7	5.30
	70	90.4	80.7	5.57	98.7	68.6	5.64	105.7	57.7	5.70	111.3	48.2	5.73	93.1	93.1	5.59	97.6	83.6	5.63	105.7	73.5	5.70	111.3	64.1	5.73	118.4	55.4	5.70	122.6	48.3	5.68
	72	89.9	80.3	5.75	98.1	68.3	5.82	104.9	57.5	5.88	110.5	48.0	5.91	92.5	92.5	5.77	97.1	83.3	5.81	104.9	73.2	5.88	110.5	63.9	5.91	117.5	55.2	5.89	121.7	48.1	5.87
	75	89.1	79.8	6.03	97.2	67.8	6.10	103.7	57.1	6.16	109.2	47.7	6.19	91.7	91.7	6.05	96.2	82.7	6.09	103.7	72.8	6.16	109.2	63.5	6.19	116.2	54.9	6.17	120.3	47.9	6.16
2950	79	88.0	79.0	6.39	96.0	67.1	6.47	102.1	56.7	6.53	107.6	47.4	6.55	90.5	90.5	6.42	95.0	81.9	6.46	102.1	72.2	6.53	107.6	63.0	6.55	114.4	54.5	6.55	118.5	47.5	6.55
CFM	83	86.8	78.3	6.76	94.8	66.5	6.84	100.5	56.2	6.90	105.9	47.0	6.92	89.4	89.4	6.78	93.8	81.1	6.83	100.5	71.6	6.90	105.9	62.5	6.92	112.6	54.0	6.93	116.6	47.1	6.93
	87	85.7	77.5	7.13	93.6	65.9	7.21	98.9	55.8	7.27	104.2	46.6	7.29	88.2	88.2	7.15	92.6	80.3	7.20	98.9	71.0	7.27	104.2	62.0	7.29	110.8	53.6	7.31	114.8	46.7	7.32
	91	84.6	76.7	7.49	92.4	65.2	7.58	97.3	55.3	7.64	102.5	46.2	7.66	87.1	87.1	7.52	91.4	79.5	7.57	97.3	70.4	7.64	102.5	61.4	7.66	109.0	53.1	7.68	112.9	46.3	7.70
	93	84.1	76.4	7.67	91.8	64.9	7.77	96.5	55.0	7.82	101.7	46.0	7.84	86.5	86.5	7.70	90.8	79.1	7.76	96.5	70.1	7.82	101.7	61.2	7.84	108.2	52.9	7.87	112.0	46.1	7.89
	95	83.5	76.0	7.86	91.2	64.6	7.95	95.8	54.8	8.00	100.9	45.8	8.03	86.0	86.0	7.89	90.2	78.7	7.94	95.8	69.8	8.00	100.9	60.9	8.03	107.3	52.6	8.06	111.1	45.9	8.08
	99	82.4	75.2	8.22	90.0	63.9	8.33	94.2	54.3	8.37	99.2	45.3	8.39	84.8	84.8	8.26	89.0	77.9	8.31	94.2	69.1	8.37	99.2	60.3	8.39	105.5	52.1	8.44	109.3	45.4	8.47
	103	81.3	74.4	8.59	88.8	63.2	8.70	92.6	53.7	8.74	97.5	44.9	8.76	83.7	83.7	8.62	87.8	77.1	8.68	92.6	68.5	8.74	97.5	59.7	8.76	103.7	51.6	8.82	107.4	45.0	8.85
	106	80.5	73.8	8.86	87.9	62.7	8.97	91.4	53.3	9.02	96.3	44.5	9.04	82.8	82.8	8.90	86.9	76.5	8.96	91.4	67.9	9.02	96.3	59.3	9.04	102.4	51.2	9.10	106.0	44.7	9.14
	110	79.4	73.0	9.23	86.7	62.1	9.35	89.8	52.8	9.39	94.6	44.1	9.41	81.7	81.7	9.27	85.7	75.7	9.33	89.8	67.2	9.39	94.6	58.7	9.41	100.6	50.7	9.48	104.2	44.2	9.53
	115	78.0	72.0	9.69	85.2	61.2	9.81	87.8	52.1	9.85	92.5	43.5	9.87	80.3	80.3	9.73	84.2	74.7	9.79	87.8	66.3	9.85	92.5	57.9	9.87	98.4	50.0	9.95	101.9	43.6	10.01
	118	77.2	71.4	9.96	84.3	60.7	10.09	86.6	51.6	10.13	91.3	43.1	10.14	79.4	79.4	10.00	83.3	74.0	10.07	86.6	65.8	10.13	91.3	57.4	10.14	97.0	49.6	10.24	100.5	43.2	10.30
	122																														
	23	96.9	88.0	4.29	105.8	74.8	4.34	114.2	62.5	4.19	120.3	52.2	4.06	99.8	99.8	4.30	104.7	91.2	4.33	114.2	79.6	4.19	120.3	69.5	4.06	127.9	60.0	3.89	132.5	52.4	3.79
	30	96.7	87.8	4.31	105.6	74.6	4.36	114.0	62.4	4.21	120.1	52.1	4.08	99.6	99.6	4.33	104.4	91.0	4.36	114.0	79.5	4.21	120.1	69.3	4.08	127.7	59.9	3.91	132.2	52.2	3.81
	40	96.4	87.5	4.34	105.3	74.4	4.39	113.6	62.2	4.24	119.7	52.0	4.11	99.3	99.3	4.36	104.1	90.7	4.39	113.6	79.2	4.24	119.7	69.1	4.11	127.3	59.7	3.93	131.9	52.1	3.83
	50	96.1	87.3	4.37	105.0	74.2	4.42	113.3	62.0	4.22	119.4	51.8	4.13	98.9	98.9	4.39	103.8	90.5	4.42	113.3	79.0	4.22	119.4	68.9	4.13	126.9	59.6	3.98	131.5	51.9	3.88
	54	96.0	87.2	4.38	104.8	74.1	4.44	113.2	61.9	4.32	119.2	51.7	4.27	98.8	98.8	4.40	103.7	90.4	4.43	113.2	78.9	4.32	119.2	68.9	4.27	126.8	59.5	4.20	131.3	51.9	4.16
	58	95.7	86.8	4.49	104.4	73.8	4.54	112.7	61.7	4.61	118.7	51.5	4.64	98.5	98.5	4.50	103.3	90.0	4.53	112.7	78.6	4.61	118.7	68.6	4.64	126.2	59.2	4.58	130.8	51.7	4.54
	62	94.5	86.0	4.85	103.2	73.0	4.91	111.1	61.2	4.98	117.0	51.1	5.01	97.3	97.3	4.87	102.1	89.1	4.91	111.1	78.0	4.98	117.0	68.1	5.01	124.4	58.8	4.96	128.9	51.3	4.93
	66	93.4	85.2	5.22	102.0	72.4	5.29	109.4	60.8	5.35	115.3	50.8	5.38	96.1	96.1	5.24	100.9	88.3	5.28	109.4	77.5	5.35	115.3	67.6	5.38	122.6	58.4	5.34	127.0	50.9	5.31
	70	92.3	84.4	5.59	100.7	71.7	5.66	107.8	60.4	5.72	113.6	50.4	5.75	95.0	95.0	5.61	99.6	87.5	5.65	107.8	76.9	5.72	113.6	67.1	5.75	120.8	58.0	5.72	125.1	50.6	5.70
	72	91.7	84.0	5.77	100.1	71.4	5.84	107.0	60.1	5.90	112.7	50.2	5.93	94.4	94.4	5.79	99.0	87.1	5.83	107.0	76.6	5.90	112.7	66.8	5.93	119.9	57.8	5.91	124.2	50.4	5.89
	75	90.9	83.5	6.05	99.2	70.9	6.12	105.8	59.8	6.18	111.5	49.9	6.21	93.5	93.5	6.07	98.1	86.5	6.11	105.8	76.2	6.18	111.5	66.5	6.21	118.5	57.4	6.19	122.8	50.1	6.18
3350	79	89.7	82.7	6.42	98.0	70.3	6.49	104.2	59.3	6.55	109.8	49.6	6.58	92.4	92.4	6.44	96.9	85.7	6.48	104.2	75.6	6.55	109.8	65.9	6.58	116.7	57.0	6.57	120.9	49.7	6.57
CFM	83	88.6	81.9	6.78	96.7	69.6	6.87	102.6	58.8	6.92	108.0	49.2	6.95	91.2	91.2	6.81	95.7	84.9	6.86	102.6	75.0	6.92	108.0	65.4	6.95	114.9	56.5	6.95	119.0	49.3	6.96
	87	87.5	81.1	7.15	95.5	68.9	7.24	100.9	58.3	7.29	106.3	48.7	7.32	90.0	90.0	7.18	94.5	84.1	7.23	100.9	74.3	7.29	106.3	64.9	7.32	113.1	56.0	7.33	117.1	48.9	7.34
	91	86.4	80.3	7.52	94.3	68.2	7.61	99.3	57.8	7.66	104.6	48.3	7.69	88.9	88.9	7.55	93.2	83.2	7.60	99.3	73.7	7.66	104.6	64.3	7.69	111.3	55.6	7.71	115.2	48.4	7.73
	93	85.8	79.9	7.70	93.7	67.9	7.80	98.5	57.6	7.85	103.8	48.1	7.87	88.3	88.3	7.73	92.6	82.8	7.78	98.5	73.4	7.85	103.8	64.0	7.87	110.4	55.3	7.90	114.3	48.2	7.92
	95	85.2	79.5	7.89	93.0	67.5	7.98	97.7	57.3	8.03	102.9	47.9	8.05	87.7	87.7	7.92	92.0	82.4	7.97	97.7	73.0	8.03	102.9	63.7	8.05	109.4	55.1	8.09	113.4	48.0	8.11
	99	84.1	78.7	8.25	91.8	66.9	8.36	96.1	56.8	8.40	101.2	47.4	8.42	86.6	86.6	8.28	90.8	81.6	8.34	96.1	72.3	8.40	101.2	63.1	8.42	107.6	54.5	8.47	111.5	47.6	8.50
	103	83.0	77.9	8.62	90.6	66.2	8.73	94.5	56.2	8.77	99.5	47.0	8.79	85.4	85.4	8.65	89.6	80.7	8.71	94.5	71.6	8.77	99.5	62.5	8.79	105.8	54.0	8.85	109.6	47.1	8.89
	106	82.1	77.2	8.90	89.7	65.6	9.01	93.2	55.8	9.05	98.2	46.6	9.07	84.5	84.5	8.93	88.7	80.1	8.99	93.2	71.1	9.05	98.2	62.0	9.07	104.5	53.6	9.13	108.2	46.7	9.18
	110	81.0	76.4	9.26	88.4	64.9	9.38	91.6	55.2	9.42	96.5	46.1	9.44	83.4	83.4	9.30	87.5	79.2	9.36	91.6	70.3	9.42	96.5	61.4	9.44	102.6	53.0	9.51	106.3	46.3	9.56
	115	79.6	75.4	9.72	86.9	64.0	9.84	89.6	54.5	9.88	94.4	45.5	9.90	81.9	81.9	9.76	85.9	78.1	9.83	89.6	69.4	9.88	94.4	60.6	9.90	100.4	52.3	9.99	104.0	45.6	10.04
	118	78.7	74.7	10.00	86.0	63.5	10.12	88.4	54.0	10.16	93.1	45.1	10.18	81.0	81.0	10.04	85.0	77.5	10.11	88.4	68.8	10.16	93.1	60.0	10.18	99.0	51.9	10.27	102.6	45.3	10.33
	122																														

TC: Evaporator Total Capacity (1,000 BTU/h) Net TC = TC - Blower input

SC: Evaporator Sensible Capacity(1,000 BTU/h) Net SC = SC - Blower input

PI: Power input(kW) Compressor + outdoor fan System PI = PI + Blower input

Note: TC and SC represent the evaporator's heat load and do not account for the blower input. To calculate the net capacity, subtract the blower input from each value.

is shown as reference data

The blank areas indicate that operation at this compressor speed is not possible under those conditions.

ID DB		80																				
ID WB		57			61			64			67			70			72			75		
ID CFM	OD DB	TC	SC	PI	TC	SC	PI	TC	SC	PI	TC	SC	PI	TC	SC	PI	TC	SC	PI	TC	SC	PI
	23	100.8	100.8	4.28	100.8	100.8	4.28	108.8	87.3	4.13	114.6	78.3	4.01	121.9	70.1	3.84	126.2	63.0	3.74	132.7	54.5	3.56
	30	100.6	100.6	4.30	100.6	100.6	4.30	108.6	87.1	4.15	114.4	78.1	4.02	121.6	69.9	3.85	126.0	62.9	3.76	132.5	54.5	3.59
	40	100.3	100.3	4.33	100.3	100.3	4.33	108.3	86.8	4.17	114.0	77.9	4.05	121.3	69.7	3.88	125.6	62.7	3.78	132.3	54.4	3.63
	50	100.0	100.0	4.36	100.0	100.0	4.36	107.9	86.6	4.16	113.7	77.6	4.07	120.9	69.5	3.92	125.2	62.5	3.83	132.1	54.3	3.68
	54	99.9	99.9	4.37	99.9	99.9	4.37	107.8	86.5	4.26	113.6	77.6	4.21	120.8	69.4	4.14	125.1	62.5	4.10	132.0	54.2	4.03
	58	99.5	99.5	4.48	99.5	99.5	4.48	107.3	86.1	4.54	113.1	77.2	4.57	120.3	69.1	4.52	124.6	62.2	4.48	131.2	53.9	4.42
	62	98.3	98.3	4.84	98.3	98.3	4.84	105.8	85.5	4.91	111.5	76.7	4.94	118.5	68.6	4.89	122.8	61.7	4.86	129.4	53.3	4.81
	66	97.1	97.1	5.21	97.1	97.1	5.21	104.3	84.9	5.27	109.8	76.1	5.30	116.8	68.2	5.26	121.0	61.3	5.24	127.6	52.7	5.20
	70	96.0	96.0	5.58	96.0	96.0	5.58	102.7	84.3	5.64	108.2	75.6	5.66	115.1	67.7	5.64	119.2	60.9	5.62	125.7	52.1	5.59
	72	95.4	95.4	5.76	95.4	95.4	5.76	101.9	84.0	5.82	107.4	75.3	5.85	114.2	67.4	5.82	118.3	60.6	5.81	124.8	51.8	5.79
	75	94.5	94.5	6.04	94.5	94.5	6.04	100.8	83.5	6.09	106.2	74.9	6.12	112.9	67.0	6.10	116.9	60.3	6.09	123.4	51.3	6.08
2550	79	93.3	93.3	6.40	93.3	93.3	6.40	99.2	82.8	6.46	104.6	74.3	6.48	111.2	66.5	6.48	115.2	59.8	6.48	121.6	50.7	6.47
CFM	83	92.2	92.2	6.77	92.2	92.2	6.77	97.7	82.1	6.82	102.9	73.7	6.85	109.4	66.0	6.85	113.4	59.3	6.86	119.8	50.1	6.86
	87	91.0	91.0	7.14	91.0	91.0	7.14	96.2	81.5	7.19	101.3	73.1	7.21	107.7	65.4	7.23	111.6	58.8	7.24	117.9	49.5	7.25
	91	89.8	89.8	7.50	89.8	89.8	7.50	94.6	80.7	7.55	99.7	72.4	7.58	106.0	64.8	7.60	109.8	58.3	7.62	116.1	48.9	7.64
	93	89.2	89.2	7.69	89.2	89.2	7.69	93.8	80.4	7.74	98.9	72.1	7.76	105.1	64.5	7.79	108.9	58.1	7.81	115.2	48.6	7.84
	95	88.6	88.6	7.87	88.6	88.6	7.87	93.1	80.0	7.92	98.1	71.8	7.94	104.3	64.3	7.97	108.0	57.8	8.00	114.3	48.3	8.03
	99	87.5	87.5	8.24	87.5	87.5	8.24	91.5	79.3	8.28	96.4	71.1	8.30	102.5	63.6	8.35	106.2	57.2	8.38	112.4	47.6	8.42
	103	86.3	86.3	8.60	86.3	86.3	8.60	90.0	78.5	8.65	94.8	70.4	8.67	100.8	63.0	8.72	104.4	56.7	8.76	110.6	47.0	8.81
	106	85.4	85.4	8.88	85.4	85.4	8.88	88.8	77.9	8.92	93.6	69.9	8.94	99.5	62.6	9.00	103.1	56.3	9.04	109.2	46.5	9.11
	110	84.2	84.2	9.24	84.2	84.2	9.24	87.3	77.1	9.29	92.0	69.1	9.31	97.8	61.9	9.38	101.3	55.7	9.43	107.4	45.9	9.50
	115	82.8	82.8	9.70	82.8	82.8	9.70	85.4	76.1	9.74	89.9	68.2	9.76	95.6	61.1	9.84	99.0	54.9	9.90	105.1	45.1	9.99
	118	81.9	81.9	9.98	81.9	81.9	9.98	84.2	75.4	10.02	88.7	67.6	10.03	94.3	60.6	10.13	97.7	54.5	10.19	103.7	44.6	10.28
	122																					
	23	103.7	103.7	4.33	103.7	103.7	4.33	111.9	92.2	4.18	117.9	82.7	4.05	125.4	74.1	3.88	129.9	66.6	3.78	136.5	57.6	3.60
	30	103.5	103.5	4.35	103.5	103.5	4.35	111.7	92.0	4.20	117.7	82.5	4.07	125.1	73.9	3.90	129.6	66.5	3.80	136.3	57.5	3.63
	40	103.2	103.2	4.38	103.2	103.2	4.38	111.4	91.8	4.22	117.3	82.3	4.09	124.8	73.7	3.92	129.2	66.3	3.82	136.1	57.5	3.67
	50	102.9	102.9	4.41	102.9	102.9	4.41	111.1	91.5	4.20	117.0	82.1	4.12	124.4	73.5	3.97	128.9	66.1	3.87	135.9	57.4	3.72
	54	102.7	102.7	4.42	102.7	102.7	4.42	110.9	91.4	4.30	116.9	82.0	4.25	124.3	73.4	4.19	128.7	66.0	4.14	135.8	57.3	4.07
	58	102.4	102.4	4.52	102.4	102.4	4.52	110.4	91.0	4.59	116.3	81.6	4.62	123.7	73.1	4.56	128.1	65.7	4.53	135.0	57.0	4.47
	62	101.1	101.1	4.90	101.1	101.1	4.90	108.9	90.3	4.96	114.7	81.0	4.99	121.9	72.5	4.94	126.3	65.2	4.91	133.1	56.3	4.86
	66	99.9	99.9	5.27	99.9	99.9	5.27	107.3	89.7	5.33	113.0	80.4	5.36	120.2	72.0	5.32	124.5	64.8	5.30	131.2	55.7	5.26
	70	98.7	98.7	5.64	98.7	98.7	5.64	105.7	89.1	5.70	111.3	79.9	5.73	118.4	71.5	5.70	122.6	64.3	5.68	129.4	55.0	5.65
	72	98.1	98.1	5.82	98.1	98.1	5.82	104.9	88.7	5.88	110.5	79.6	5.91	117.5	71.3	5.89	121.7	64.1	5.87	128.4	54.7	5.85
	75	97.2	97.2	6.10	97.2	97.2	6.10	103.7	88.2	6.16	109.2	79.1	6.19	116.2	70.8	6.17	120.3	63.7	6.16	127.0	54.2	6.15
2950	79	96.0	96.0	6.47	96.0	96.0	6.47	102.1	87.5	6.53	107.6	78.5	6.55	114.4	70.3	6.55	118.5	63.2	6.55	125.1	53.6	6.54
CFM	83	94.8	94.8	6.84	94.8	94.8	6.84	100.5	86.8	6.90	105.9	77.9	6.92	112.6	69.7	6.93	116.6	62.7	6.93	123.2	53.0	6.94
	87	93.6	93.6	7.21	93.6	93.6	7.21	98.9	86.1	7.27	104.2	77.2	7.29	110.8	69.1	7.31	114.8	62.2	7.32	121.3	52.3	7.33
	91	92.4	92.4	7.58	92.4	92.4	7.58	97.3	85.3	7.64	102.5	76.5	7.66	109.0	68.5	7.68	112.9	61.6	7.70	119.4	51.7	7.73
	93	91.8	91.8	7.77	91.8	91.8	7.77	96.5	84.9	7.82	101.7	76.2	7.84	108.2	68.2	7.87	112.0	61.4	7.89	118.5	51.3	7.92
	95	91.2	91.2	7.95	91.2	91.2	7.95	95.8	84.6	8.00	100.9	75.8	8.03	107.3	67.9	8.06	111.1	61.1	8.08	117.6	51.0	8.12
	99	90.0	90.0	8.33	90.0	90.0	8.33	94.2	83.8	8.37	99.2	75.1	8.39	105.5	67.3	8.44	109.3	60.5	8.47	115.7	50.3	8.52
	103	88.8	88.8	8.70	88.8	88.8	8.70	92.6	82.9	8.74	97.5	74.4	8.76	103.7	66.6	8.82	107.4	59.9	8.85	113.8	49.7	8.91
	106	87.9	87.9	8.97	87.9	87.9	8.97	91.4	82.3	9.02	96.3	73.8	9.04	102.4	66.1	9.10	106.0	59.5	9.14	112.4	49.1	9.21
	110	86.7	86.7	9.35	86.7	86.7	9.35	89.8	81.5	9.39	94.6	73.1	9.41	100.6	65.4	9.48	104.2	58.8	9.53	110.5	48.5	9.60
	115	85.2	85.2	9.81	85.2	85.2	9.81	87.8	80.4	9.85	92.5	72.1	9.87	98.4	64.5	9.95	101.9	58.1	10.01	108.1	47.6	10.09
	118	84.3	84.3	10.09	84.3	84.3	10.09	86.6	79.7	10.13	91.3	71.5	10.14	97.0	64.0	10.24	100.5	57.6	10.30	106.7	47.1	10.39
	122																					
	23	105.8	105.8	4.34	105.8	105.8	4.34	114.2	96.5	4.19	120.3	86.5	4.06	127.9	77.5	3.89	132.5	69.7	3.79	139.3	60.3	3.61
	30	105.6	105.6	4.36	105.6	105.6	4.36	114.0	96.3	4.21	120.1	86.4	4.08	127.7	77.3	3.91	132.2	69.6	3.81	139.1	60.2	3.64
	40	105.3	105.3	4.39	105.3	105.3	4.39	113.6	96.0	4.24	119.7	86.1	4.11	127.3	77.1	3.93	131.9	69.3	3.83	138.9	60.1	3.69
	50	105.0	105.0	4.42	105.0	105.0	4.42	113.3	95.7	4.22	119.4	85.9	4.13	126.9	76.9	3.98	131.5	69.1	3.88	138.6	60.0	3.73
	54	104.8	104.8	4.44	104.8	104.8	4.44	113.2	95.6	4.32	119.2	85.8	4.27	126.8	76.8	4.20	131.3	69.1	4.16	138.5	60.0	4.09
	58	104.4	104.4	4.54	104.4	104.4	4.54	112.7	95.2	4.61	118.7	85.4	4.64	126.2	76.5	4.58	130.8	68.8	4.54	137.8	59.6	4.48
	62	103.2	103.2	4.91	103.2	103.2	4.91	111.1	94.5	4.98	117.0	84.8	5.01	124.4	75.9	4.96	128.9	68.3	4.93	135.8	58.9	4.88
	66	102.0	102.0	5.29	102.0	102.0	5.29	109.4	93.9	5.35	115.3	84.2	5.38	122.6	75.4	5.34	127.0	67.8	5.31	133.9	58.2	5.28
	70	100.7	100.7	5.66	100.7	100.7	5.66	107.8	93.2	5.72	113.6	83.6	5.75	120.8	74.8	5.72	125.1	67.3	5.70	132.0	57.6	5.67
	72	100.1	100.1	5.84	100.1	100.1	5.84	107.0	92.8	5.90	112.7	83.3	5.93	119.9	74.6	5.91	124.2	67.1	5.89	131.0	57.3	5.87
	75	99.2	99.2	6.12	99.2	99.2	6.12	105.8	92.3	6.18	111.5	82.8	6.21	118.5	74.1	6.19	122.8	66.7	6.18	129.6	56.8	6.17
3350	79	98.0	98.0	6.49	98.0	98.0	6.49	104.2	91.6	6.55	109.8	82.1	6.58	116.7	73.5	6.57	120.9	66.2	6.57	127.7	56.1	6.56
CFM	83	96.7	96.7	6.87	96.7	96.7	6.87	102.6	90.8	6.92	108.0	81.5	6.95	114.9	72.9	6.95	119.0	65.6	6.96	125.7	55.4	6.96
	87	95.5	95.5	7.24	95.5	95.5	7.24	100.9	90.1	7.29	106.3	80.8	7.32	113.1	72.3	7.33	117.1	65.1	7.34	123.8	54.7	7.36
	91	94.3	94.3	7.61	94.3	94.3	7.61	99.3	89.3	7.66	104.6	80.1	7.69	111.3	71.7	7.71	115.2	64.5	7.73	121.9	54.0	7.75
	93	93.7	93.7	7.80	93.7	93.7	7.80	98.5	88.9	7.85	103.8	79.7	7.87	110.4	71.4	7.90	114.3	64.2	7.92	120.9	53.7	7.95
	95	93.0	93.0	7.98	93.0	93.0	7.98	97.7	88.5	8.03	102.9	79.3	8.05	109.4	71.0	8.09	113.4	63.9	8.11	120.0	53.4	8.15
	99	91.8	91.8	8.36	91.8	91.8	8.36	96.1	87.6	8.40	101.2	78.6	8.42	107.6	70.4	8.47	111.5	63.3	8.50	118.0	52.7	8.55
	103	90.6	90.6	8.73	90.6	90.6	8.73	94.5	86.8	8.77	99.5	77.8	8.79	105.8	69.7	8.85	109.6	62.7	8.89	116.1	52.0	8.94
	106	89.7	89.7	9.01	89.7	89.7	9.01	93.2	86.1	9.05	98.2	77.2	9.07	104.5	69.2	9.13	108.2	62.2	9.18	114.7	51.4	9.24
	110	88.4	88.4	9.38	88.4	88.4	9.38	91.6	85.2	9.42	96.5	76.4	9.44	102.6	68.5	9.51	106.3	61.6	9.56	112.7	50.7	9.64
	115	86.9	86.9	9.84	86.9	86.9	9.84	89.6	84.1	9.88	94.4	75.4	9.90	100.4	67.5	9.99	104.0	60.7	10.04	110.3	49.8	10.13
	118	86.0	86.0	10.12	86.0	86.0	10.12	88.4	83.4	10.16	93.1	74.8	10.18	99.0	67.0	10.27	102.6	60.2	10.33	108.9	49.3	10.43
	122																					

TC: Evaporator Total Capacity (1,000 BTU/h) Net TC = TC - Blower input

SC: Evaporator Sensible Capacity(1,000 BTU/h) Net SC = SC - Blower input

PI: Power input(kW) Compressor + outdoor fan System PI = PI + Blower input

Note: TC and SC represent the evaporator's heat load and do not account for the blower input. To calculate the net capacity, subtract the blower input from each value.

is shown as reference data

The blank areas indicate that operation at this compressor speed is not possible under those conditions.

ID DB			85																				
ID WB			57			61			64			67			70			72			75		
ID CFM	OD DB	TC	SC	PI	TC	SC	PI	TC	SC	PI	TC	SC	PI	TC	SC	PI	TC	SC	PI	TC	SC	PI	PI
	23	106.7	106.7	4.32	106.7	106.7	4.32	110.0	99.9	4.14	114.6	93.4	4.01	121.9	85.7	3.84	126.2	78.5	3.74	132.7	70.4	3.56	2.79
	30	106.5	106.5	4.34	106.5	106.5	4.34	109.8	99.7	4.16	114.4	93.2	4.02	121.6	85.5	3.85	126.0	78.4	3.76	132.5	70.3	3.59	2.82
	40	106.1	106.1	4.37	106.2	106.2	4.37	109.5	99.4	4.18	114.0	93.0	4.05	121.3	85.2	3.88	125.6	78.1	3.78	132.3	70.2	3.63	2.85
	50	105.8	105.8	4.40	105.8	105.8	4.40	109.2	99.1	4.17	113.7	92.7	4.07	120.9	85.0	3.92	125.2	77.9	3.83	132.1	70.1	3.68	2.88
	54	105.7	105.7	4.41	105.7	105.7	4.41	109.1	99.0	4.27	113.6	92.6	4.21	120.8	84.9	4.14	125.1	77.8	4.10	132.0	70.1	4.03	3.10
	58	105.3	105.3	4.52	105.3	105.3	4.52	108.6	98.6	4.55	113.1	92.2	4.57	120.3	84.5	4.52	124.6	77.5	4.48	131.2	69.7	4.42	3.44
	62	104.1	104.1	4.89	104.1	104.1	4.89	107.0	97.9	4.92	111.5	91.5	4.94	118.5	83.9	4.89	122.8	76.9	4.86	129.4	68.8	4.81	3.79
	66	102.8	102.8	5.26	102.8	102.8	5.26	105.5	97.2	5.28	109.8	90.9	5.30	116.8	83.3	5.26	121.0	76.4	5.24	127.6	68.0	5.20	4.13
	70	101.6	101.6	5.63	101.6	101.6	5.63	103.9	96.5	5.65	108.2	90.2	5.66	115.1	82.7	5.64	119.2	75.8	5.62	125.7	67.3	5.59	4.47
	72	100.9	100.9	5.81	101.0	101.0	5.81	103.1	96.1	5.83	107.4	89.9	5.85	114.2	82.4	5.82	118.3	75.5	5.81	124.8	66.9	5.79	4.65
	75	100.0	100.0	6.09	100.0	100.0	6.09	102.0	95.6	6.11	106.2	89.4	6.12	112.9	81.9	6.10	116.9	75.1	6.09	123.4	66.3	6.08	4.91
2550	79	98.8	98.8	6.46	98.8	98.8	6.46	100.4	94.8	6.47	104.6	88.7	6.48	111.2	81.3	6.48	115.2	74.5	6.48	121.6	65.5	6.47	5.25
CFM	83	97.5	97.5	6.83	97.5	97.5	6.83	98.8	94.0	6.84	102.9	87.9	6.85	109.4	80.6	6.85	113.4	73.9	6.86	119.8	64.7	6.86	5.59
	87	96.3	96.3	7.20	96.3	96.3	7.20	97.3	93.2	7.20	101.3	87.2	7.21	107.7	80.0	7.23	111.6	73.3	7.24	117.9	63.9	7.25	5.94
	91	95.1	95.1	7.57	95.1	95.1	7.57	95.7	92.4	7.57	99.7	86.4	7.58	106.0	79.3	7.60	109.8	72.6	7.62	116.1	63.1	7.64	6.28
	93	94.4	94.4	7.76	94.4	94.4	7.76	94.9	92.0	7.75	98.9	86.0	7.76	105.1	78.9	7.79	108.9	72.3	7.81	115.2	62.7	7.84	6.46
	95	93.8	93.8	7.94	93.8	93.8	7.94	94.1	91.6	7.93	98.1	85.7	7.94	104.3	78.5	7.97	108.0	72.0	8.00	114.3	62.3	8.03	6.63
	99	92.6	92.6	8.31	92.6	92.6	8.31	92.6	92.6	8.30	96.4	84.8	8.30	102.5	77.8	8.35	106.2	71.3	8.38	112.4	61.5	8.42	6.97
	103	91.3	91.3	8.68	91.3	91.3	8.68	91.0	91.0	8.67	94.8	84.0	8.67	100.8	77.0	8.72	104.4	70.6	8.76	110.6	60.7	8.81	7.32
	106	90.4	90.4	8.96	90.4	90.4	8.96	89.9	89.9	8.94	93.6	83.4	8.94	99.5	76.5	9.00	103.1	70.1	9.04	109.2	60.1	9.11	7.58
	110	89.2	89.2	9.33	89.2	89.2	9.33	88.3	88.3	9.31	92.0	82.5	9.31	97.8	75.7	9.38	101.3	69.4	9.43	107.4	59.2	9.50	7.92
	115	87.6	87.6	9.79	87.6	87.6	9.80	86.3	86.3	9.76	89.9	81.4	9.76	95.6	74.7	9.84	99.0	68.4	9.90	105.1	58.2	9.99	8.35
	118	86.7	86.7	10.07	86.7	86.7	10.07	85.2	85.2	10.04	88.7	80.7	10.03	94.3	74.0	10.13	97.7	67.9	10.19	103.7	57.6	10.28	8.61
	122																						
	23	109.8	109.8	4.37	109.8	109.8	4.37	113.2	105.6	4.19	117.9	98.7	4.05	125.4	90.5	3.88	129.9	83.0	3.78	136.5	74.4	3.60	2.81
	30	109.5	109.5	4.39	109.5	109.5	4.39	113.0	105.4	4.20	117.7	98.5	4.07	125.1	90.3	3.90	129.6	82.8	3.80	136.3	74.3	3.63	2.83
	40	109.2	109.2	4.42	109.2	109.2	4.42	112.7	105.0	4.23	117.3	98.2	4.09	124.8	90.1	3.92	129.2	82.6	3.82	136.1	74.2	3.67	2.86
	50	108.9	108.9	4.45	108.9	108.9	4.45	112.3	104.7	4.21	117.0	97.9	4.12	124.4	89.8	3.97	128.9	82.3	3.87	135.9	74.1	3.72	2.89
	54	108.7	108.7	4.46	108.7	108.7	4.46	112.2	104.6	4.31	116.9	97.8	4.25	124.3	89.7	4.19	128.7	82.2	4.14	135.8	74.0	4.07	3.11
	58	108.3	108.3	4.57	108.3	108.3	4.57	111.7	104.2	4.60	116.3	97.4	4.62	123.7	89.3	4.56	128.1	81.9	4.53	135.0	73.6	4.47	3.46
	62	107.0	107.0	4.94	107.1	107.1	4.94	110.1	103.4	4.97	114.7	96.7	4.99	121.9	88.7	4.94	126.3	81.3	4.91	133.1	72.7	4.86	3.80
	66	105.8	105.8	5.32	105.8	105.8	5.32	108.5	102.7	5.34	113.0	96.0	5.36	120.2	88.1	5.32	124.5	80.7	5.30	131.2	71.9	5.26	4.15
	70	104.5	104.5	5.69	104.5	104.5	5.69	106.9	102.0	5.71	111.3	95.3	5.73	118.4	87.4	5.70	122.6	80.1	5.68	129.4	71.1	5.65	4.50
	72	103.9	103.9	5.88	103.9	103.9	5.88	106.1	101.6	5.90	110.5	95.0	5.91	117.5	87.1	5.89	121.7	79.8	5.87	128.4	70.7	5.85	4.67
	75	102.9	102.9	6.16	102.9	102.9	6.16	104.9	101.0	6.17	109.2	94.4	6.19	116.2	86.6	6.17	120.3	79.4	6.16	127.0	70.1	6.15	4.93
2950	79	101.6	101.6	6.53	101.6	101.6	6.53	103.3	100.2	6.54	107.6	93.7	6.55	114.4	85.9	6.55	118.5	78.8	6.55	125.1	69.2	6.54	5.28
CFM	83	100.3	100.3	6.91	100.3	100.3	6.91	101.7	99.4	6.91	105.9	92.9	6.92	112.6	85.2	6.93	116.6	78.1	6.93	123.2	68.4	6.94	5.62
	87	99.1	99.1	7.28	99.1	99.1	7.28	100.1	98.5	7.28	104.2	92.2	7.29	110.8	84.5	7.31	114.8	77.5	7.32	121.3	67.6	7.33	5.97
	91	97.8	97.8	7.66	97.8	97.8	7.66	98.5	97.7	7.65	102.5	91.3	7.66	109.0	83.8	7.68	112.9	76.8	7.70	119.4	66.7	7.73	6.31
	93	97.2	97.2	7.84	97.2	97.2	7.84	97.7	97.2	7.84	101.7	90.9	7.84	108.2	83.4	7.87	112.0	76.4	7.89	118.5	66.3	7.92	6.49
	95	96.5	96.5	8.03	96.5	96.5	8.03	96.9	96.8	8.02	100.9	90.5	8.03	107.3	83.0	8.06	111.1	76.1	8.08	117.6	65.9	8.12	6.66
	99	95.2	95.2	8.40	95.2	95.2	8.40	95.3	95.3	8.39	99.2	89.7	8.39	105.5	82.2	8.44	109.3	75.4	8.47	115.7	65.0	8.52	7.01
	103	94.0	94.0	8.78	94.0	94.0	8.78	93.6	93.6	8.76	97.5	88.8	8.76	103.7	81.4	8.82	107.4	74.6	8.85	113.8	64.1	8.91	7.35
	106	93.0	93.0	9.06	93.0	93.0	9.06	92.4	92.4	9.04	96.3	88.1	9.04	102.4	80.8	9.10	106.0	74.1	9.14	112.4	63.5	9.21	7.61
	110	91.7	91.7	9.43	91.7	91.7	9.43	90.8	90.8	9.41	94.6	87.2	9.41	100.6	80.0	9.48	104.2	73.3	9.53	110.5	62.6	9.60	7.96
	115	90.1	90.1	9.90	90.1	90.1	9.90	88.8	88.8	9.87	92.5	86.0	9.87	98.4	78.9	9.95	101.9	72.3	10.01	108.1	61.5	10.09	8.39
	118	89.2	89.2	10.18	89.2	89.2	10.18	87.6	87.6	10.15	91.3	85.3	10.14	97.0	78.2	10.24	100.5	71.7	10.30	106.7	60.8	10.39	8.65
	122																						
	23	112.0	112.0	4.38	112.0	112.0	4.38	115.5	110.5	4.20	120.3	103.3	4.06	127.9	94.7	3.89	132.5	86.8	3.79	139.3	77.9	3.61	2.82
	30	111.8	111.8	4.40	111.8	111.8	4.40	115.3	110.2	4.22	120.1	103.1	4.08	127.7	94.5	3.91	132.2	86.6	3.81	139.1	77.8	3.64	2.84
	40	111.4	111.4	4.43	111.4	111.4	4.44	115.0	109.9	4.24	119.7	102.8	4.11	127.3	94.2	3.93	131.9	86.4	3.83	138.9	77.6	3.69	2.87
	50	111.1	111.1	4.47	111.1	111.1	4.47	114.6	109.6	4.23	119.4	102.5	4.13	126.9	94.0	3.98	131.5	86.1	3.88	138.6	77.5	3.73	2.90
	54	111.0	111.0	4.48	111.0	111.0	4.48	114.5	109.5	4.33	119.2	102.4	4.27	126.8	93.9	4.20	131.3	86.0	4.16	138.5	77.5	4.09	3.12
	58	110.5	110.5	4.58	110.5	110.5	4.58	114.0	109.0	4.62	118.7	101.9	4.64	126.2	93.5	4.58	130.8	85.7	4.54	137.8	77.0	4.48	3.47
	62	109.2	109.2	4.96	109.2	109.2	4.96	112.3	108.2	4.99	117.0	101.2	5.01	124.4	92.8	4.96	128.9	85.0	4.93	135.8	76.1	4.88	3.82
	66	107.9	107.9	5.33	107.9	107.9	5.34	110.7	107.4	5.36	115.3	100.5	5.38	122.6	92.1	5.34	127.0	84.5	5.31	133.9	75.2	5.28	4.17
	70	106.6	106.6	5.71	106.6	106.6	5.71	109.1	106.7	5.73	113.6	99.8	5.75	120.8	91.5	5.72	125.1	83.8	5.70	132.0	74.4	5.67	4.52
	72	106.0	106.0	5.90	106.0	106.0	5.90	108.3	106.3	5.92	112.7	99.4	5.93	119.9	91.1	5.91	124.2	83.5	5.89	131.0	74.0	5.87	4.69
	75	105.0	105.0	6.18	105.0	105.0	6.18	107.0	105.7	6.20	111.5	98.8	6.21	118.5	90.6	6.19	122.8	83.1	6.18	129.6	73.3	6.17	4.95
3350	79	103.7	103.7	6.56	103.7	103.7	6.56	105.4	104.8	6.57	109.8	98.0	6.58	116.7	89.9	6.57	120.9	82.4	6.57	127.7	72.4	6.56	5.30
CFM	83	102.4	102.4	6.93	102.4	102.4	6.93	103.7	104.0	6.94	108.0	97.2	6.95	114.9	89.2	6.95	119.0	81.7	6.96	125.7	71.6	6.96	5.65
	87	101.1	101.1	7.31	101.1	101.1	7.31	102.1	103.1	7.31	106.3	96.4	7.32	113.1	88.4	7.33	117.1	81.0	7.34	123.8	70.7	7.36	5.99
	91	99.8	99.8	7.68	99.8	99.8	7.68	100.5	102.2	7.68	104.6	95.6	7.69	111.3	87.6	7.71	115.2	80.3	7.73	121.9	69.8	7.75	6.34
	93	99.1	99.1	7.87	99.1	99.1	7.87	99.6	101.7	7.86	103.8	95.1	7.87	110.4	87.2	7.90	114.3	80.0	7.92	120.9	69.4	7.95	6.52
	95	98.5	98.5	8.06	98.5	98.5	8.06	98.8	101.3	8.05	102.9	94.7	8.05	109.4	86.8	8.09	113.4	79.6	8.11	120.0	68.9	8.15	6.69
	99	97.2	97.2	8.43	97.2	97.2	8.43	97.2	97.2	8.42	101.2	93.8	8.42	107.6	86.0	8.47	111.5	78.9	8.50	118.0	68.0	8.55	7.04
	103	95.9	95.9	8.81	95.9	95.9	8.81	95.6	95.6	8.79	99.5	92.9	8.79	105.8	85.2	8.85	109.6	78.1	8.89	116.1	67.1	8.94	7.38
	106	94.9	94.9	9.09	94.9	94.9	9.09	94.3	94.3	9.07	98.2	92.2	9.07	104.5	84.5	9.13	108.2	77.5	9.18	114.7	66.4	9.24	7.65
	110	93.6	93.6	9.47	93.6	93.6	9.47	92.7	92.7	9.44	96.5	91.2	9.44	102.6	83.7	9.51	106.3	76.7	9.56	112.7	65.5	9.64	7.99
	115	92.0	92.0	9.94	92.0	92.0	9.94	90.6	90.6	9.90	94.4	90.0	9.90	100.4	82.6	9.99	104.0	75.7	10.04	110.3	64.3	10.13	8.43
	118	91.0	91.0	10.22	91.0	91.0	10.22	89.4	89.4	10.18	93.1	89.3	10.18	99.0	81.9	10.27	102.6	75.0	10.33	108.9	63.6	10.43	8.69
	122																						

TC: Evaporator Total Capacity (1,000 BTU/h) Net TC = TC - Blower input

SC: Evaporator Sensible Capacity(1,000 BTU/h) Net SC = SC - Blower input

PI: Power input(kW) Compressor + outdoor fan System PI = PI + Blower input

Note: TC and SC represent the evaporator's heat load and do not account for the blower input. To calculate the net capacity, subtract the blower input from each value.

is shown as reference data

The blank areas indicate that operation at this compressor speed is not possible under those conditions.

ID DB		70																		75											
ID WB		57			61			64			67			57			61			64			67			70			72		
ID CFM	OD DB	TC	SC	PI	TC	SC	PI	TC	SC	PI	TC	SC	PI	TC	SC	PI	TC	SC	PI	TC	SC	PI	TC	SC	PI	TC	SC	PI	TC	SC	PI
	23	24.1	24.1	0.49	24.1	24.1	0.49	24.4	19.7	0.48	25.7	13.5	0.47	26.0	26.0	0.47	26.0	26.0	0.47	26.0	26.0	0.47	26.0	26.0	0.47	27.2	17.4	0.45	28.3	14.2	0.42
	30	24.1	24.1	0.49	24.1	24.1	0.49	24.4	19.7	0.48	25.7	13.5	0.47	26.0	26.0	0.47	26.0	26.0	0.47	26.0	26.0	0.47	26.0	26.0	0.47	27.2	17.4	0.45	28.3	14.2	0.42
	40	24.1	24.1	0.49	24.1	24.1	0.49	24.4	19.6	0.48	25.7	13.5	0.47	26.0	26.0	0.47	26.0	26.0	0.47	26.0	26.0	0.47	25.9	25.9	0.47	27.2	17.4	0.45	28.3	14.2	0.42
	50	24.1	24.1	0.49	24.1	24.1	0.49	24.4	19.6	0.48	25.7	13.4	0.47	26.0	26.0	0.47	26.0	26.0	0.47	26.0	26.0	0.47	25.9	25.9	0.47	27.2	17.4	0.45	28.2	14.2	0.42
	54	24.1	24.1	0.49	24.1	24.1	0.49	24.4	19.6	0.48	25.7	13.4	0.47	26.0	26.0	0.47	26.0	26.0	0.47	26.0	26.0	0.47	25.9	25.9	0.47	27.2	17.4	0.45	28.2	14.2	0.42
	58	24.0	24.0	0.49	24.0	24.0	0.49	24.4	19.6	0.49	25.7	13.4	0.47	26.0	26.0	0.47	26.0	26.0	0.47	26.0	26.0	0.47	25.9	25.9	0.47	27.2	17.4	0.46	28.2	14.2	0.42
	62	24.0	24.0	0.49	24.0	24.0	0.49	24.4	19.6	0.49	25.7	13.4	0.47	25.9	25.9	0.47	26.0	26.0	0.47	26.0	26.0	0.47	25.9	25.9	0.47	27.1	17.4	0.46	28.2	14.2	0.42
	66	24.0	24.0	0.49	24.0	24.0	0.49	24.4	19.6	0.49	25.7	13.4	0.47	25.9	25.9	0.47	25.9	25.9	0.47	25.9	25.9	0.47	25.9	25.9	0.47	27.1	17.4	0.46	28.2	14.2	0.42
	70	24.0	24.0	0.53	24.0	24.0	0.53	24.4	19.6	0.52	25.7	13.4	0.51	25.9	25.9	0.50	25.9	25.9	0.50	25.9	25.9	0.50	25.9	25.9	0.50	27.1	17.4	0.49	28.2	14.2	0.45
	72	23.8	23.8	0.57	23.8	23.8	0.57	24.2	19.6	0.57	25.5	13.4	0.55	25.7	25.7	0.55	25.7	25.7	0.55	25.7	25.7	0.55	25.7	25.7	0.55	26.9	17.3	0.54	28.0	14.1	0.53
	75	23.6	23.6	0.65	23.6	23.6	0.65	23.9	19.5	0.65	25.2	13.3	0.63	25.4	25.4	0.62	25.4	25.4	0.62	25.4	25.4	0.62	25.4	25.4	0.62	26.6	17.2	0.61	27.7	13.9	0.59
2700	79	23.2	23.2	0.75	23.2	23.2	0.75	23.5	19.3	0.74	24.8	13.2	0.72	25.0	25.0	0.72	25.0	25.0	0.72	25.0	25.0	0.72	25.0	25.0	0.72	26.2	17.1	0.70	27.2	13.7	0.69
CFM	83	22.8	22.8	0.85	22.8	22.8	0.85	23.1	19.2	0.84	24.4	13.2	0.82	24.6	24.6	0.81	24.6	24.6	0.81	24.6	24.6	0.81	24.6	24.6	0.81	25.8	17.0	0.79	26.8	13.4	0.78
	87	22.4	22.4	0.95	22.4	22.4	0.95	22.7	19.1	0.94	24.0	13.1	0.92	24.2	24.2	0.91	24.2	24.2	0.91	24.2	24.2	0.91	24.2	24.2	0.91	25.3	16.9	0.88	26.3	13.2	0.87
	91	22.1	22.1	1.05	22.1	22.1	1.05	22.4	18.9	1.04	23.6	13.0	1.01	23.8	23.8	1.01	23.8	23.8	1.01	23.8	23.8	1.01	23.8	23.8	1.01	24.9	16.8	0.98	25.9	13.0	0.96
	93	21.9	21.9	1.10	21.9	21.9	1.10	22.2	18.9	1.09	23.4	12.9	1.06	23.6	23.6	1.05	23.6	23.6	1.05	23.6	23.6	1.05	23.6	23.6	1.05	24.7	16.7	1.02	25.7	12.9	1.00
	95	21.7	21.7	1.15	21.7	21.7	1.15	22.0	18.8	1.14	23.2	12.9	1.11	23.4	23.4	1.10	23.4	23.4	1.10	23.4	23.4	1.10	23.4	23.4	1.10	24.5	16.6	1.07	25.5	12.8	1.05
	99	21.3	21.3	1.25	21.3	21.3	1.25	21.6	18.6	1.24	22.8	12.8	1.20	23.0	23.0	1.20	23.0	23.0	1.20	23.0	23.0	1.20	23.0	23.0	1.20	24.1	16.5	1.16	25.0	12.6	1.14
	103	20.9	20.9	1.35	20.9	20.9	1.35	21.2	18.5	1.34	22.4	12.7	1.30	22.6	22.6	1.29	22.6	22.6	1.29	22.6	22.6	1.29	22.6	22.6	1.29	23.7	16.4	1.26	24.6	12.3	1.23
	106	20.7	20.7	1.42	20.7	20.7	1.42	20.9	18.4	1.41	22.1	12.6	1.37	22.3	22.3	1.36	22.3	22.3	1.36	22.3	22.3	1.36	22.3	22.3	1.36	23.3	16.2	1.32	24.3	12.2	1.30
	110	20.3	20.3	1.52	20.3	20.3	1.52	20.6	18.2	1.51	21.7	12.5	1.47	21.9	21.9	1.46	21.9	21.9	1.46	21.9	21.9	1.46	21.9	21.9	1.46	22.9	16.1	1.42	23.8	12.0	1.39
	115	19.8	19.8	1.65	19.8	19.8	1.65	20.1	18.0	1.63	21.2	12.3	1.59	21.4	21.4	1.58	21.4	21.4	1.58	21.4	21.4	1.58	21.4	21.4	1.58	22.4	15.9	1.53	23.3	11.7	1.51
	118	19.5	19.5	1.72	19.5	19.5	1.72	19.8	17.8	1.71	20.9	12.2	1.66	21.1	21.1	1.65	21.1	21.1	1.65	21.1	21.1	1.65	21.1	21.1	1.65	22.1	15.8	1.60	22.9	11.5	1.57
	122	19.2	19.2	1.82	19.2	19.2	1.82	19.4	17.6	1.81	20.5	12.1	1.76	20.7	20.7	1.75	20.7	20.7	1.75	20.7	20.7	1.75	20.7	20.7	1.75	21.6	15.6	1.70	22.5	11.3	1.67
	23	24.3	24.3	0.48	24.3	24.3	0.48	24.6	21.2	0.48	25.9	14.5	0.46	26.2	26.2	0.46	26.2	26.2	0.46	26.2	26.2	0.46	26.2	26.2	0.46	27.4	18.8	0.45	28.5	15.3	0.41
	30	24.3	24.3	0.48	24.3	24.3	0.48	24.6	21.2	0.48	25.9	14.5	0.47	26.2	26.2	0.46	26.2	26.2	0.46	26.2	26.2	0.46	26.2	26.2	0.46	27.4	18.8	0.45	28.5	15.3	0.41
	40	24.3	24.3	0.48	24.3	24.3	0.48	24.6	21.2	0.48	25.9	14.5	0.47	26.2	26.2	0.46	26.2	26.2	0.46	26.2	26.2	0.46	26.2	26.2	0.46	27.4	18.8	0.45	28.5	15.3	0.41
	50	24.3	24.3	0.48	24.3	24.3	0.48	24.6	21.2	0.48	25.9	14.5	0.47	26.2	26.2	0.46	26.2	26.2	0.46	26.2	26.2	0.46	26.2	26.2	0.46	27.4	18.8	0.45	28.5	15.3	0.41
	54	24.3	24.3	0.48	24.3	24.3	0.48	24.6	21.2	0.48	25.9	14.5	0.47	26.2	26.2	0.47	26.2	26.2	0.47	26.2	26.2	0.47	26.2	26.2	0.46	27.4	18.8	0.45	28.5	15.3	0.42
	58	24.3	24.3	0.49	24.3	24.3	0.49	24.6	21.2	0.48	25.9	14.5	0.47	26.2	26.2	0.47	26.2	26.2	0.47	26.2	26.2	0.47	26.1	26.1	0.47	27.4	18.8	0.45	28.5	15.3	0.42
	62	24.2	24.2	0.49	24.2	24.2	0.49	24.6	21.2	0.48	25.9	14.5	0.47	26.2	26.2	0.47	26.2	26.2	0.47	26.2	26.2	0.47	26.1	26.1	0.47	27.4	18.8	0.45	28.5	15.3	0.42
	66	24.2	24.2	0.49	24.2	24.2	0.49	24.6	21.2	0.48	25.9	14.5	0.47	26.2	26.2	0.47	26.2	26.2	0.47	26.2	26.2	0.47	26.1	26.1	0.47	27.4	18.8	0.45	28.5	15.3	0.42
	70	24.2	24.2	0.52	24.2	24.2	0.52	24.6	21.2	0.52	25.9	14.5	0.50	26.2	26.2	0.50	26.2	26.2	0.50	26.2	26.2	0.50	26.1	26.1	0.50	27.4	18.7	0.49	28.5	15.3	0.45
	72	24.0	24.0	0.57	24.0	24.0	0.57	24.4	21.1	0.57	25.7	14.5	0.55	26.0	26.0	0.55	26.0	26.0	0.55	26.0	26.0	0.55	25.9	25.9	0.55	27.1	18.7	0.53	28.2	15.2	0.52
	75	23.8	23.8	0.65	23.8	23.8	0.65	24.1	21.0	0.64	25.4	14.4	0.62	25.6	25.6	0.62	25.6	25.6	0.62	25.6	25.6	0.62	25.6	25.6	0.62	26.8	18.6	0.60	27.9	15.0	0.59
3100	79	23.4	23.4	0.74	23.4	23.4	0.74	23.7	20.9	0.74	25.0	14.3	0.72	25.2	25.2	0.71	25.2	25.2	0.71	25.2	25.2	0.71	25.2	25.2	0.71	26.4	18.5	0.69	27.5	14.8	0.68
CFM	83	23.0	23.0	0.84	23.0	23.0	0.84	23.3	20.8	0.84	24.6	14.2	0.81	24.8	24.8	0.81	24.8	24.8	0.81	24.8	24.8	0.81	24.8	24.8	0.81	26.0	18.4	0.79	27.0	14.5	0.77
	87	22.6	22.6	0.94	22.6	22.6	0.94	22.9	20.6	0.94	24.2	14.1	0.91	24.4	24.4	0.90	24.4	24.4	0.90	24.4	24.4	0.90	24.4	24.4	0.90	25.6	18.2	0.88	26.6	14.3	0.86
	91	22.3	22.3	1.04	22.3	22.3	1.04	22.6	20.5	1.03	23.8	14.0	1.00	24.0	24.0	1.00	24.0	24.0	1.00	24.0	24.0	1.00	24.0	24.0	1.00	25.1	18.1	0.97	26.1	14.0	0.95
	93	22.1	22.1	1.09	22.1	22.1	1.09	22.4	20.4	1.08	23.6	13.9	1.05	23.8	23.8	1.05	23.8	23.8	1.05	23.8	23.8	1.05	23.8	23.8	1.05	24.9	18.0	1.02	25.9	13.9	1.00
	95	21.9	21.9	1.14	21.9	21.9	1.14	22.2	20.3	1.13	23.4	13.9	1.10	23.6	23.6	1.09	23.6	23.6	1.09	23.6	23.6	1.09	23.6	23.6	1.09	24.7	18.0	1.06	25.7	13.8	1.04
	99	21.5	21.5	1.24	21.5	21.5	1.24	21.8	20.1	1.23	23.0	13.8	1.20	23.2	23.2	1.19	23.2	23.2	1.19	23.2	23.2	1.19	23.2	23.2	1.19	24.3	17.8	1.15	25.2	13.6	1.13
	103	21.1	21.1	1.34	21.1	21.1	1.34	21.4	20.0	1.33	22.6	13.7	1.29	22.8	22.8	1.28	22.8	22.8	1.28	22.8	22.8	1.28	22.8	22.8	1.28	23.9	17.7	1.25	24.8	13.3	1.22
	106	20.8	20.8	1.41	20.8	20.8	1.41	21.1	19.8	1.40	22.3	13.6	1.36	22.5	22.5	1.35	22.5	22.5	1.35	22.5	22.5	1.35	22.5	22.5	1.35	23.5	17.5	1.32	24.5	13.2	1.29
	110	20.5	20.5	1.51	20.5	20.5	1.51	20.7	19.6	1.50	21.8	13.4	1.46	22.1	22.1	1.45	22.1	22.1	1.45	22.1	22.1	1.45	22.1	22.1	1.45	23.1	17.4	1.41	24.0	12.9	1.38
	115	20.0	20.0	1.63	20.0	20.0	1.63	20.3	19.4	1.62	21.3	13.3	1.58	21.6	21.6	1.57	21.6	21.6	1.57	21.6	21.6	1.57	21.6	21.6	1.57	22.6	17.2	1.52	23.5	12.6	1.50
	118	19.7	19.7	1.71	19.7	19.7	1.71	20.0	19.3	1.70	21.0	13.2	1.65	21.3	21.3	1.64	21.3	21.3	1.64	21.3	21.3	1.64	21.3	21.3	1.64	22.3	17.0	1.59	23.1	12.4	1.56
	122	19.3	19.3	1.81	19.3	19.3	1.81	19.6	19.0	1.80	20.6	13.0	1.74	20.9	20.9	1.73	20.9	20.9	1.73	20.9	20.9	1.73	20.8	20.8	1.73	21.8	16.9	1.68	22.7	12.2	1.65
	23	24.4	24.4	0.48	24.4	24.4	0.48	24.8	22.8	0.48	26.1	15.6	0.46	26.4	26.4	0.46	26.4	26.4	0.46	26.4	26.4	0.46	26.4	26.4	0.46	27.6	20.1	0.45	28.7	16.4	0.41
	30	24.4	24.4	0.48	24.4	24.4	0.48	24.8	22.7	0.48	26.1	15.6	0.46	26.4	26.4	0.46	26.4	26.4	0.46	26.4	26.4	0.46	26.3	26.3	0.46	27.6	20.1	0.45	28.7	16.4	0.41
	40	24.4	24.4	0.48	24.4	24.4	0.48	24.8	22.7	0.48	26.1	15.6	0.46	26.4	26.4	0.46	26.4	26.4	0.46	26.4	26.4	0.46	26.3	26.3	0.46	27.6	20.1	0.45	28.7	16.4	0.41
	50	24.4	24.4	0.48	24.4	24.4	0.48	24.8	22.7	0.48	26.1	15.6	0.46	26.4	26.4	0.46	26.4	26.4	0.46	26.4	26.4	0.46	26.3	26.3	0.46	27.6	20.1	0.45	28.7	16.4	0.41
	54	24.4	24.4	0.48	24.4	24.4	0.48	24.7	22.7	0.48	26.1	15.6	0.46	26.3	26.3	0.46	26.4	26.4	0.46	26.4	26.4	0.46	26.3	26.3	0.46	27.6	20.1	0.45	28.7	16.4	0.41
	58	24.4	24.4	0.48	24.4	24.4	0.48	24.7	22.7	0.48	26.1	15.6	0.47	26.3	26.3	0.46	26.3	26.3	0.46	26.3	26.3	0.46	26.3	26.3	0.46	27.6	20.1	0.45	28.7	16.4	0.41
	62	24.4	24.4	0.48	24.4	24.4	0.48	24.7	22.7	0.48	26.1	15.6	0.47	26.3	26.3	0.46	26.3	26.3	0.46	26.3	26.3	0.46	26.3	26.3	0.46	27.6	20.1	0.45	28.7	16.4	0.41
	66	24.4	24.4	0.48	24.4	24.4	0.48	24.7	22.7	0.48	26.1	15.6	0.47	26.3	26.3	0.46	26.3	26.3	0.46	26.3	26.3	0.46	26.3	26.3	0.46	27.6	20.1	0.45	28.7	16.4	0.41
	70	24.4	24.4	0.52	24.4	24.4	0.52	24.7	22.7	0.51	26.0	15.5	0.50	26.3	26.3	0.50	26.3	26.3	0.50	26.3	26.3	0.50	26.3	26.3	0.50	27.5	20.1	0.48	28.6	16.4	0.44
	72	24.2	24.2	0.57	24.2	24.2	0.57	24.5	22.6	0.56	25.8	15.5	0.55	26.1	26.1	0.54	26.1	26.1	0.54	26.1	26.1	0.54	26.1	26.1	0.54	27.3	20.0	0.53	28.4	16.3	0.52
	75	23.9	23.9	0.64	23.9	23.9	0.64	24.2	22.5	0.64	25.5	15.4	0.62	25.8	25.8	0.62	25.8	25.8	0.62	25.8	25.8	0.62	25.8	25.8	0.62	27.0	19.9	0.60	28.1	16.1	0.59
3500	79	23.5	23.5	0.74	23.5	23.5	0.74	23.9	22.4	0.73	25.1	15.3	0.71	25.4	25.4	0.71	25.4	25.4	0.71	25.4	25.4	0.71	25.4	25.4	0.71	26.6	19.8	0.69	27.6	15.8	0.68
CFM	83	23.2	23.2	0.84	23.2	23.2	0.84	23.5	22.2	0.83	24.7	15.2	0.81	25.0	25.0	0.80	25.0	25.0	0.80	25.0	25.0	0.80	25.0	25.0	0.80	26.1	19.7	0.78	27.2	15.6	0.77
	87	22.8	22.8	0.94	22.8	22.8	0.94	23.1	22.1	0.93	24.3	15.1	0.90	24.6	24.6	0.90	24.6	24.6	0.90	24.6	24.6	0.90	24.6	24.6	0.90	25.7	19.5	0.87	26.7	15.3	0.86
	91	22.4	22.4	1.03	22.4	22.4	1.03	22.7	21.9	1.03	23.9	15.0	1.00	24.2	24.2	0.99	24.2	24.2	0.99	24.2	24.2	0.99	24.1	24.1	0.99	25.3	19.4	0.96	26.3	15.1	0.95
	93	22.2	22.2	1.08	22.2	22.2	1.08	22.5	21.8	1.08	23.7	15.0	1.05	24.0	24.0	1.04	24.0	24.0	1.04	24.0	24.0	1.04	23.9	23.9	1.04	25.1	19.3	1.01	26.1	14.9	0.99
	95	22.0	22.0	1.13	22.0	22.0	1.13	22.3	21.8	1.13	23.5	14.9	1.09	23.8	23.8	1.09	23.8	23.8	1.09	23.8	23.8	1.09	23.7	23.7	1.09	24.9	19.3	1.06	25.9	14.8	1.04
	99	21.6	21.6	1.23	21.6	21.6	1.23	21.9	21.6	1.22	23.1	14.8	1.19	23.4	23.4	1.18	23.4	23.4	1.18	23.4	23.4	1.18	23.3	23.3	1.18	24.4	19.1	1.15	25.4	14.5	1.13
	103	21.3	21.3	1.33	21.3	21.3	1.33	21.6	21.4	1.32	22.7	14.6	1.28	22.9	22.9	1.28	23.0	23.0	1.28	23.0	23.0	1.28	22.9	22.9	1.28	24.0	18.9	1.24	25.0	14.3	1.22
	106	21.0	21.0	1.40	21.0	21.0	1.40	21.3	21.2	1.39	22.4	14.5	1.35	22.6	22.6	1.35	22.6	22.6	1.35	22.6	22.6	1.35	22.6	22.6	1.35	23.7	18.8	1.31	24.6	14.1	1.28
	110	20.6	20.6	1.50	20.6	20.6	1.50	20.9	21.1	1.49	22.0	14.4	1.45	22.2	22.2	1.44	22.2	22.2	1.44	22.2	22.2	1.44	22.2	22.2	1.44	23.3	18.6	1.40	24.2	13.8	1.37
	115	20.1	20.1	1.63	20.1	20.1	1.63	20.4	20.8	1.61	21.5	14.2	1.57	21.7	21.7	1.56	21.7	21.7	1.56	21.7	21.7	1.56	21.7	21.7	1.56	22.7	18.4	1.51	23.6	13.5	1.49
	118	19.8	19.8	1.70	19.8	19.8	1.70	20.1	20.6	1.69	21.2	14.1	1.64	21.4	21.4	1.63	21.4	21.4	1.63	21.4	21.4	1.63	21.4	21.4	1.63	22.4	18.3	1.58	23.3	13.3	1.55
	122	19.5	19.5	1.80	19.5	19.5	1.80	19.7	20.4	1.79	20.8	14.0	1.73	21.0	21.0	1.72	21.0	21.0	1.72	21.0	21.0	1.72	21.0	21.0	1.72	22.0	18.1	1.67	22.8	13.1	1.64

TC: Evaporator Total Capacity (1,000 BTU/h) Net TC = TC - Blower input

SC: Evaporator Sensible Capacity(1,000 BTU/h) Net SC = SC - Blower input

PI: Power input(kW) Compressor + outdoor fan System PI = PI + Blower input

Note: TC and SC represent the evaporator's heat load and do not account for the blower input. To calculate the net capacity, subtract the blower input from each value.

is shown as reference data

The blank areas indicate that operation at this compressor speed is not possible under those conditions.

ID DB		80																				
ID WB		57			61			64			67			70			72			75		
ID CFM	OD DB	TC	SC	PI	TC	SC	PI	TC	SC	PI	TC	SC	PI	TC	SC	PI	TC	SC	PI	TC	SC	PI
2700 CFM	23	27.9	27.9	0.44	27.9	27.9	0.44	27.9	27.9	0.44	27.9	27.9	0.44	27.9	27.9	0.44	28.3	24.8	0.42	30.1	17.5	0.35
	30	27.9	27.9	0.44	27.9	27.9	0.44	27.9	27.9	0.44	27.9	27.9	0.44	27.9	27.9	0.44	28.3	24.8	0.42	30.1	17.5	0.36
	40	27.9	27.9	0.45	27.9	27.9	0.45	27.9	27.9	0.45	27.9	27.9	0.45	27.9	27.9	0.45	28.3	24.8	0.42	30.1	17.5	0.36
	50	27.9	27.9	0.45	27.9	27.9	0.45	27.9	27.9	0.45	27.9	27.9	0.45	27.9	27.9	0.45	28.2	24.8	0.42	30.1	17.5	0.36
	54	27.9	27.9	0.45	27.9	27.9	0.45	27.9	27.9	0.45	27.9	27.9	0.45	27.9	27.9	0.45	28.2	24.8	0.42	30.1	17.5	0.36
	58	27.9	27.9	0.45	27.9	27.9	0.45	27.9	27.9	0.45	27.9	27.9	0.45	27.9	27.9	0.45	28.2	24.7	0.42	30.1	17.5	0.36
	62	27.9	27.9	0.45	27.9	27.9	0.45	27.9	27.9	0.45	27.9	27.9	0.45	27.9	27.9	0.45	28.2	24.7	0.42	30.1	17.5	0.36
	66	27.9	27.9	0.45	27.9	27.9	0.45	27.9	27.9	0.45	27.9	27.9	0.45	27.9	27.9	0.45	28.2	24.7	0.42	30.1	17.5	0.36
	70	27.9	27.9	0.48	27.9	27.9	0.48	27.9	27.9	0.48	27.9	27.9	0.48	27.9	27.9	0.48	28.2	24.7	0.45	30.0	17.4	0.40
	72	27.7	27.7	0.53	27.7	27.7	0.53	27.7	27.7	0.53	27.7	27.7	0.53	27.7	27.7	0.53	28.0	24.5	0.53	29.8	17.4	0.45
	75	27.3	27.3	0.59	27.3	27.3	0.59	27.3	27.3	0.59	27.3	27.3	0.59	27.3	27.3	0.59	27.7	24.3	0.59	29.4	17.3	0.52
	79	26.9	26.9	0.69	26.9	26.9	0.69	26.9	26.9	0.69	26.9	26.9	0.69	26.9	26.9	0.69	27.2	23.9	0.69	28.9	17.1	0.62
	83	26.5	26.5	0.78	26.5	26.5	0.78	26.5	26.5	0.78	26.5	26.5	0.78	26.5	26.5	0.78	26.8	23.5	0.78	28.4	17.0	0.71
	87	26.0	26.0	0.87	26.0	26.0	0.87	26.0	26.0	0.87	26.0	26.0	0.87	26.0	26.0	0.87	26.3	23.1	0.87	27.8	16.8	0.81
	91	25.6	25.6	0.96	25.6	25.6	0.96	25.6	25.6	0.96	25.6	25.6	0.96	25.6	25.6	0.96	25.9	22.7	0.96	27.3	16.7	0.91
	93	25.4	25.4	1.00	25.4	25.4	1.00	25.4	25.4	1.00	25.4	25.4	1.00	25.4	25.4	1.00	25.7	22.5	1.00	27.1	16.6	0.95
	95	25.2	25.2	1.05	25.2	25.2	1.05	25.2	25.2	1.05	25.2	25.2	1.05	25.2	25.2	1.05	25.5	22.3	1.05	26.8	16.5	1.00
	99	24.7	24.7	1.14	24.7	24.7	1.14	24.7	24.7	1.14	24.7	24.7	1.14	24.7	24.7	1.14	25.0	21.9	1.14	26.3	16.3	1.10
	103	24.3	24.3	1.23	24.3	24.3	1.23	24.3	24.3	1.23	24.3	24.3	1.23	24.3	24.3	1.23	24.6	21.6	1.23	25.8	16.2	1.19
	106	24.0	24.0	1.30	24.0	24.0	1.30	24.0	24.0	1.30	24.0	24.0	1.30	24.0	24.0	1.30	24.3	21.3	1.30	25.4	16.0	1.27
	110	23.5	23.5	1.39	23.5	23.5	1.39	23.5	23.5	1.39	23.5	23.5	1.39	23.5	23.5	1.39	23.8	20.9	1.39	24.9	15.9	1.36
	115	23.0	23.0	1.51	23.0	23.0	1.51	23.0	23.0	1.51	23.0	23.0	1.51	23.0	23.0	1.51	23.3	20.4	1.51	24.2	15.6	1.48
	118	22.7	22.7	1.57	22.7	22.7	1.57	22.7	22.7	1.57	22.7	22.7	1.57	22.7	22.7	1.57	22.9	20.1	1.57	23.8	15.5	1.55
	122	22.2	22.2	1.67	22.2	22.2	1.67	22.2	22.2	1.67	22.2	22.2	1.67	22.2	22.2	1.67	22.5	19.7	1.67	23.3	15.3	1.65
3100 CFM	23	28.2	28.2	0.44	28.2	28.2	0.44	28.2	28.2	0.44	28.2	28.2	0.44	28.2	28.2	0.44	28.5	26.8	0.41	30.4	18.9	0.35
	30	28.2	28.2	0.44	28.2	28.2	0.44	28.2	28.2	0.44	28.2	28.2	0.44	28.2	28.2	0.44	28.5	26.8	0.41	30.4	18.9	0.35
	40	28.2	28.2	0.44	28.2	28.2	0.44	28.2	28.2	0.44	28.2	28.2	0.44	28.2	28.2	0.44	28.5	26.7	0.41	30.4	18.9	0.35
	50	28.1	28.1	0.44	28.1	28.1	0.44	28.1	28.1	0.44	28.2	28.2	0.44	28.1	28.1	0.44	28.5	26.7	0.41	30.4	18.9	0.35
	54	28.1	28.1	0.44	28.1	28.1	0.44	28.1	28.1	0.44	28.1	28.1	0.44	28.1	28.1	0.44	28.5	26.7	0.42	30.4	18.9	0.36
	58	28.1	28.1	0.44	28.1	28.1	0.44	28.1	28.1	0.44	28.1	28.1	0.44	28.1	28.1	0.44	28.5	26.7	0.42	30.4	18.9	0.36
	62	28.1	28.1	0.44	28.1	28.1	0.44	28.1	28.1	0.44	28.1	28.1	0.44	28.1	28.1	0.44	28.5	26.7	0.42	30.4	18.9	0.36
	66	28.1	28.1	0.44	28.1	28.1	0.44	28.1	28.1	0.44	28.1	28.1	0.44	28.1	28.1	0.44	28.5	26.7	0.42	30.4	18.9	0.36
	70	28.1	28.1	0.48	28.1	28.1	0.48	28.1	28.1	0.48	28.1	28.1	0.48	28.1	28.1	0.48	28.5	26.7	0.45	30.3	18.8	0.40
	72	27.9	27.9	0.52	27.9	27.9	0.52	27.9	27.9	0.52	27.9	27.9	0.52	27.9	27.9	0.52	28.2	26.5	0.52	30.0	18.8	0.45
	75	27.6	27.6	0.59	27.6	27.6	0.59	27.6	27.6	0.59	27.6	27.6	0.59	27.6	27.6	0.59	27.9	26.2	0.59	29.6	18.6	0.52
	79	27.1	27.1	0.68	27.1	27.1	0.68	27.1	27.1	0.68	27.1	27.1	0.68	27.1	27.1	0.68	27.5	25.8	0.68	29.1	18.5	0.61
	83	26.7	26.7	0.77	26.7	26.7	0.77	26.7	26.7	0.77	26.7	26.7	0.77	26.7	26.7	0.77	27.0	25.4	0.77	28.6	18.3	0.71
	87	26.3	26.3	0.86	26.3	26.3	0.86	26.3	26.3	0.86	26.3	26.3	0.86	26.3	26.3	0.86	26.6	24.9	0.86	28.1	18.2	0.80
	91	25.8	25.8	0.95	25.8	25.8	0.95	25.8	25.8	0.95	25.8	25.8	0.95	25.8	25.8	0.95	26.1	24.5	0.95	27.6	18.0	0.90
	93	25.6	25.6	1.00	25.6	25.6	1.00	25.6	25.6	1.00	25.6	25.6	1.00	25.6	25.6	1.00	25.9	24.3	1.00	27.3	17.9	0.95
	95	25.4	25.4	1.04	25.4	25.4	1.04	25.4	25.4	1.04	25.4	25.4	1.04	25.4	25.4	1.04	25.7	24.1	1.04	27.0	17.8	1.00
	99	24.9	24.9	1.13	24.9	24.9	1.13	24.9	24.9	1.13	25.0	25.0	1.13	24.9	24.9	1.13	25.2	23.7	1.13	26.5	17.6	1.09
	103	24.5	24.5	1.22	24.5	24.5	1.22	24.5	24.5	1.22	24.5	24.5	1.22	24.5	24.5	1.22	24.8	23.3	1.22	26.0	17.5	1.19
	106	24.2	24.2	1.29	24.2	24.2	1.29	24.2	24.2	1.29	24.2	24.2	1.29	24.2	24.2	1.29	24.5	23.0	1.29	25.6	17.3	1.26
	110	23.7	23.7	1.38	23.7	23.7	1.38	23.7	23.7	1.38	23.7	23.7	1.38	23.7	23.7	1.38	24.0	22.5	1.38	25.1	17.1	1.35
	115	23.2	23.2	1.50	23.2	23.2	1.50	23.2	23.2	1.50	23.2	23.2	1.50	23.2	23.2	1.50	23.5	22.0	1.50	24.4	16.9	1.47
	118	22.9	22.9	1.56	22.9	22.9	1.56	22.9	22.9	1.56	22.9	22.9	1.56	22.9	22.9	1.56	23.1	21.7	1.56	24.0	16.7	1.54
	122	22.4	22.4	1.65	22.4	22.4	1.65	22.4	22.4	1.65	22.4	22.4	1.65	22.4	22.4	1.65	22.7	21.3	1.65	23.5	16.5	1.64
3500 CFM	23	28.4	28.4	0.44	28.4	28.4	0.44	28.4	28.4	0.44	28.4	28.4	0.44	28.4	28.4	0.44	28.7	28.7	0.41	30.6	20.2	0.35
	30	28.4	28.4	0.44	28.4	28.4	0.44	28.4	28.4	0.44	28.4	28.4	0.44	28.4	28.4	0.44	28.7	28.7	0.41	30.6	20.2	0.35
	40	28.3	28.3	0.44	28.3	28.3	0.44	28.3	28.3	0.44	28.3	28.3	0.44	28.3	28.3	0.44	28.7	28.7	0.41	30.6	20.2	0.35
	50	28.3	28.3	0.44	28.3	28.3	0.44	28.3	28.3	0.44	28.3	28.3	0.44	28.3	28.3	0.44	28.7	28.7	0.41	30.6	20.2	0.35
	54	28.3	28.3	0.44	28.3	28.3	0.44	28.3	28.3	0.44	28.3	28.3	0.44	28.3	28.3	0.44	28.7	28.7	0.41	30.6	20.2	0.35
	58	28.3	28.3	0.44	28.3	28.3	0.44	28.3	28.3	0.44	28.3	28.3	0.44	28.3	28.3	0.44	28.7	28.6	0.41	30.6	20.2	0.35
	62	28.3	28.3	0.44	28.3	28.3	0.44	28.3	28.3	0.44	28.3	28.3	0.44	28.3	28.3	0.44	28.7	28.6	0.41	30.6	20.2	0.35
	66	28.3	28.3	0.44	28.3	28.3	0.44	28.3	28.3	0.44	28.3	28.3	0.44	28.3	28.3	0.44	28.7	28.6	0.41	30.6	20.2	0.35
	70	28.3	28.3	0.47	28.3	28.3	0.47	28.3	28.3	0.47	28.3	28.3	0.47	28.3	28.3	0.47	28.6	28.6	0.44	30.5	20.2	0.40
	72	28.1	28.1	0.52	28.1	28.1	0.52	28.1	28.1	0.52	28.1	28.1	0.52	28.1	28.1	0.52	28.4	28.4	0.52	30.2	20.1	0.44
	75	27.7	27.7	0.59	27.7	27.7	0.59	27.7	27.7	0.59	27.8	27.8	0.59	27.7	27.7	0.59	28.1	28.1	0.59	29.8	20.0	0.52
	79	27.3	27.3	0.68	27.3	27.3	0.68	27.3	27.3	0.68	27.3	27.3	0.68	27.3	27.3	0.68	27.6	27.6	0.68	29.3	19.8	0.61
	83	26.9	26.9	0.77	26.9	26.9	0.77	26.9	26.9	0.77	26.9	26.9	0.77	26.9	26.9	0.77	27.2	27.2	0.77	28.8	19.7	0.71
	87	26.4	26.4	0.86	26.4	26.4	0.86	26.4	26.4	0.86	26.4	26.4	0.86	26.4	26.4	0.86	26.7	26.7	0.86	28.3	19.5	0.80
	91	26.0	26.0	0.95	26.0	26.0	0.95	26.0	26.0	0.95	26.0	26.0	0.95	26.0	26.0	0.95	26.3	26.3	0.95	27.7	19.3	0.89
	93	25.8	25.8	0.99	25.8	25.8	0.99	25.8	25.8	0.99	25.8	25.8	0.99	25.8	25.8	0.99	26.1	26.1	0.99	27.5	19.2	0.94
	95	25.5	25.5	1.04	25.5	25.5	1.04	25.5	25.5	1.04	25.6	25.6	1.04	25.5	25.5	1.04	25.9	25.8	1.04	27.2	19.1	0.99
	99	25.1	25.1	1.13	25.1	25.1	1.13	25.1	25.1	1.13	25.1	25.1	1.13	25.1	25.1	1.13	25.4	25.4	1.13	26.7	18.9	1.08
	103	24.7	24.7	1.22	24.7	24.7	1.22	24.7	24.7	1.22	24.7	24.7	1.22	24.7	24.7	1.22	25.0	25.0	1.22	26.2	18.7	1.18
	106	24.3	24.3	1.28	24.3	24.3	1.28	24.3	24.3	1.28	24.3	24.3	1.28	24.3	24.3	1.28	24.6	24.6	1.28	25.8	18.6	1.25
	110	23.9	23.9	1.37	23.9	23.9	1.37	23.9	23.9	1.37	23.9	23.9	1.37	23.9	23.9	1.37	24.2	24.2	1.37	25.2	18.3	1.35
	115	23.3	23.3	1.49	23.3	23.3	1.49	23.3	23.3	1.49	23.4	23.4	1.49	23.3	23.3	1.49	23.6	23.6	1.49	24.6	18.1	1.46
	118	23.0	23.0	1.56	23.0	23.0	1.56	23.0	23.0	1.56	23.0	23.0	1.55	23.0	23.0	1.56	23.3	23.3	1.55	24.2	17.9	1.53
	122	22.6	22.6	1.65	22.6	22.6	1.65	22.6	22.6	1.65	22.6	22.6	1.64	22.6	22.6	1.65	22.8	22.8	1.64	23.7	17.7	1.63

TC: Evaporator Total Capacity (1,000 BTU/h) Net TC = TC - Blower input

SC: Evaporator Sensible Capacity(1,000 BTU/h) Net SC = SC - Blower input

PI: Power input(kW) Compressor + outdoor fan System PI = PI + Blower input

Note: TC and SC represent the evaporator's heat load and do not account for the blower input. To calculate the net capacity, subtract the blower input from each value.

is shown as reference data

The blank areas indicate that operation at this compressor speed is not possible under those conditions.

ID DB		85																				
ID WB		57			61			64			67			70			72			75		
ID CFM	OD DB	TC	SC	PI	TC	SC	PI	TC	SC	PI	TC	SC	PI	TC	SC	PI	TC	SC	PI	TC	SC	PI
2700 CFM	23	30.0	30.0	0.42	30.0	30.0	0.42	30.0	30.0	0.42	30.0	30.0	0.42	30.0	30.0	0.42	30.0	30.0	0.40	30.1	26.6	0.35
	30	30.0	30.0	0.42	30.0	30.0	0.42	30.0	30.0	0.42	30.0	30.0	0.42	30.0	30.0	0.42	30.0	30.0	0.40	30.1	26.6	0.36
	40	30.0	30.0	0.42	30.0	30.0	0.42	30.0	30.0	0.42	30.0	30.0	0.42	29.9	29.9	0.42	30.0	30.0	0.40	30.1	26.6	0.36
	50	30.0	30.0	0.42	30.0	30.0	0.42	30.0	30.0	0.42	30.0	30.0	0.42	29.9	29.9	0.42	30.0	30.0	0.40	30.1	26.6	0.36
	54	30.0	30.0	0.42	30.0	30.0	0.42	30.0	30.0	0.42	30.0	30.0	0.42	29.9	29.9	0.42	30.0	30.0	0.40	30.1	26.6	0.36
	58	29.9	29.9	0.42	30.0	30.0	0.42	30.0	30.0	0.42	30.0	30.0	0.42	29.9	29.9	0.42	30.0	30.0	0.40	30.1	26.6	0.36
	62	29.9	29.9	0.42	29.9	29.9	0.42	29.9	29.9	0.42	30.0	30.0	0.42	29.9	29.9	0.42	30.0	30.0	0.40	30.1	26.6	0.36
	66	29.9	29.9	0.42	29.9	29.9	0.42	29.9	29.9	0.42	30.0	30.0	0.42	29.9	29.9	0.42	30.0	30.0	0.40	30.1	26.6	0.36
	70	29.9	29.9	0.46	29.9	29.9	0.46	29.9	29.9	0.46	29.9	29.9	0.46	29.9	29.9	0.46	29.9	29.9	0.43	30.0	26.6	0.40
	72	29.7	29.7	0.50	29.7	29.7	0.50	29.7	29.7	0.50	29.7	29.7	0.50	29.7	29.7	0.50	29.7	29.7	0.50	29.8	26.5	0.45
	75	29.3	29.3	0.56	29.3	29.3	0.56	29.3	29.3	0.56	29.4	29.4	0.56	29.3	29.3	0.56	29.4	29.4	0.57	29.4	26.3	0.52
	79	28.9	28.9	0.65	28.9	28.9	0.65	28.9	28.9	0.65	28.9	28.9	0.65	28.9	28.9	0.65	28.9	28.9	0.65	28.9	26.1	0.62
	83	28.4	28.4	0.74	28.4	28.4	0.74	28.4	28.4	0.74	28.4	28.4	0.74	28.4	28.4	0.74	28.4	28.4	0.74	28.4	25.9	0.71
	87	27.9	27.9	0.82	28.0	28.0	0.82	28.0	28.0	0.82	28.0	28.0	0.82	27.9	27.9	0.82	28.0	28.0	0.83	27.8	25.6	0.81
	91	27.5	27.5	0.91	27.5	27.5	0.91	27.5	27.5	0.91	27.5	27.5	0.91	27.5	27.5	0.91	27.5	27.5	0.92	27.3	25.4	0.91
	93	27.3	27.3	0.95	27.3	27.3	0.95	27.3	27.3	0.95	27.3	27.3	0.95	27.2	27.2	0.95	27.3	27.3	0.96	27.1	27.1	0.95
	95	27.0	27.0	1.00	27.0	27.0	1.00	27.0	27.0	1.00	27.0	27.0	1.00	27.0	27.0	1.00	27.0	27.0	1.00	26.8	26.8	1.00
	99	26.6	26.6	1.08	26.6	26.6	1.08	26.6	26.6	1.08	26.6	26.6	1.08	26.5	26.5	1.08	26.6	26.6	1.09	26.3	26.3	1.10
	103	26.1	26.1	1.17	26.1	26.1	1.17	26.1	26.1	1.17	26.1	26.1	1.17	26.1	26.1	1.17	26.1	26.1	1.18	25.8	25.8	1.19
	106	25.7	25.7	1.23	25.7	25.7	1.23	25.7	25.7	1.23	25.7	25.7	1.23	25.7	25.7	1.23	25.8	25.8	1.24	25.4	25.4	1.27
	110	25.3	25.3	1.32	25.3	25.3	1.32	25.3	25.3	1.32	25.3	25.3	1.32	25.3	25.3	1.32	25.3	25.3	1.33	24.9	24.9	1.36
	115	24.7	24.7	1.43	24.7	24.7	1.43	24.7	24.7	1.43	24.7	24.7	1.43	24.7	24.7	1.43	24.7	24.7	1.44	24.2	24.2	1.48
	118	24.3	24.3	1.49	24.3	24.3	1.49	24.3	24.3	1.49	24.4	24.4	1.49	24.3	24.3	1.49	24.4	24.4	1.50	23.8	23.8	1.55
	122	23.9	23.9	1.58	23.9	23.9	1.58	23.9	23.9	1.58	23.9	23.9	1.58	23.9	23.9	1.58	23.9	23.9	1.59	23.3	23.3	1.65
3100 CFM	23	30.2	30.2	0.42	30.3	30.3	0.42	30.3	30.3	0.42	30.3	30.3	0.42	30.2	30.2	0.42	30.3	30.3	0.39	30.4	28.7	0.35
	30	30.2	30.2	0.42	30.2	30.2	0.42	30.2	30.2	0.42	30.3	30.3	0.42	30.2	30.2	0.42	30.3	30.3	0.39	30.4	28.7	0.35
	40	30.2	30.2	0.42	30.2	30.2	0.42	30.2	30.2	0.42	30.2	30.2	0.42	30.2	30.2	0.42	30.2	30.2	0.40	30.4	28.7	0.35
	50	30.2	30.2	0.42	30.2	30.2	0.42	30.2	30.2	0.42	30.2	30.2	0.42	30.2	30.2	0.42	30.2	30.2	0.40	30.4	28.8	0.35
	54	30.2	30.2	0.42	30.2	30.2	0.42	30.2	30.2	0.42	30.2	30.2	0.42	30.2	30.2	0.42	30.2	30.2	0.40	30.4	28.8	0.36
	58	30.2	30.2	0.42	30.2	30.2	0.42	30.2	30.2	0.42	30.2	30.2	0.42	30.2	30.2	0.42	30.2	30.2	0.40	30.4	28.8	0.36
	62	30.2	30.2	0.42	30.2	30.2	0.42	30.2	30.2	0.42	30.2	30.2	0.42	30.2	30.2	0.42	30.2	30.2	0.40	30.4	28.8	0.36
	66	30.2	30.2	0.42	30.2	30.2	0.42	30.2	30.2	0.42	30.2	30.2	0.42	30.2	30.2	0.42	30.2	30.2	0.40	30.4	28.8	0.36
	70	30.2	30.2	0.45	30.2	30.2	0.45	30.2	30.2	0.45	30.2	30.2	0.45	30.2	30.2	0.45	30.2	30.2	0.43	30.3	28.7	0.40
	72	29.9	29.9	0.50	29.9	29.9	0.50	30.0	30.0	0.50	30.0	30.0	0.50	29.9	29.9	0.50	30.0	30.0	0.50	30.0	28.6	0.45
	75	29.6	29.6	0.56	29.6	29.6	0.56	29.6	29.6	0.56	29.6	29.6	0.56	29.6	29.6	0.56	29.6	29.6	0.56	29.6	28.4	0.52
	79	29.1	29.1	0.65	29.1	29.1	0.65	29.1	29.1	0.65	29.1	29.1	0.65	29.1	29.1	0.65	29.1	29.1	0.65	29.1	28.2	0.61
	83	28.7	28.7	0.73	28.7	28.7	0.73	28.7	28.7	0.73	28.7	28.7	0.73	28.6	28.6	0.73	28.7	28.7	0.74	28.6	27.9	0.71
	87	28.2	28.2	0.82	28.2	28.2	0.82	28.2	28.2	0.82	28.2	28.2	0.82	28.2	28.2	0.82	28.2	28.2	0.82	28.1	27.7	0.80
	91	27.7	27.7	0.90	27.7	27.7	0.90	27.7	27.7	0.90	27.7	27.7	0.90	27.7	27.7	0.90	27.7	27.7	0.91	27.6	27.4	0.90
	93	27.5	27.5	0.95	27.5	27.5	0.95	27.5	27.5	0.95	27.5	27.5	0.95	27.5	27.5	0.95	27.5	27.5	0.95	27.3	27.3	0.95
	95	27.2	27.2	0.99	27.3	27.3	0.99	27.3	27.3	0.99	27.3	27.3	0.99	27.2	27.2	0.99	27.3	27.3	1.00	27.0	27.0	1.00
	99	26.8	26.8	1.07	26.8	26.8	1.07	26.8	26.8	1.07	26.8	26.8	1.07	26.8	26.8	1.07	26.8	26.8	1.08	26.5	26.5	1.09
	103	26.3	26.3	1.16	26.3	26.3	1.16	26.3	26.3	1.16	26.3	26.3	1.16	26.3	26.3	1.16	26.3	26.3	1.17	26.0	26.0	1.19
	106	26.0	26.0	1.22	26.0	26.0	1.22	26.0	26.0	1.22	26.0	26.0	1.22	25.9	25.9	1.22	26.0	26.0	1.23	25.6	25.6	1.26
	110	25.5	25.5	1.31	25.5	25.5	1.31	25.5	25.5	1.31	25.5	25.5	1.31	25.5	25.5	1.31	25.5	25.5	1.32	25.1	25.1	1.35
	115	24.9	24.9	1.42	24.9	24.9	1.42	24.9	24.9	1.42	24.9	24.9	1.42	24.9	24.9	1.42	24.9	24.9	1.43	24.4	24.4	1.47
	118	24.6	24.6	1.48	24.6	24.6	1.48	24.6	24.6	1.48	24.6	24.6	1.48	24.5	24.5	1.48	24.6	24.6	1.49	24.0	24.0	1.54
	122	24.1	24.1	1.57	24.1	24.1	1.57	24.1	24.1	1.57	24.1	24.1	1.57	24.1	24.1	1.57	24.1	24.1	1.58	23.5	23.5	1.64
3500 CFM	23	30.4	30.4	0.42	30.4	30.4	0.42	30.4	30.4	0.42	30.5	30.5	0.42	30.4	30.4	0.42	30.5	30.5	0.39	30.6	30.8	0.35
	30	30.4	30.4	0.42	30.4	30.4	0.42	30.4	30.4	0.42	30.5	30.5	0.42	30.4	30.4	0.42	30.5	30.5	0.39	30.6	30.8	0.35
	40	30.4	30.4	0.42	30.4	30.4	0.42	30.4	30.4	0.42	30.4	30.4	0.42	30.4	30.4	0.42	30.4	30.4	0.39	30.6	30.8	0.35
	50	30.4	30.4	0.42	30.4	30.4	0.42	30.4	30.4	0.42	30.4	30.4	0.42	30.4	30.4	0.42	30.4	30.4	0.39	30.6	30.8	0.35
	54	30.4	30.4	0.42	30.4	30.4	0.42	30.4	30.4	0.42	30.4	30.4	0.42	30.4	30.4	0.42	30.4	30.4	0.39	30.6	30.8	0.35
	58	30.4	30.4	0.42	30.4	30.4	0.42	30.4	30.4	0.42	30.4	30.4	0.42	30.4	30.4	0.42	30.4	30.4	0.39	30.6	30.8	0.35
	62	30.4	30.4	0.42	30.4	30.4	0.42	30.4	30.4	0.42	30.4	30.4	0.42	30.4	30.4	0.42	30.4	30.4	0.39	30.6	30.8	0.35
	66	30.4	30.4	0.42	30.4	30.4	0.42	30.4	30.4	0.42	30.4	30.4	0.42	30.4	30.4	0.42	30.4	30.4	0.40	30.6	30.8	0.35
	70	30.4	30.4	0.45	30.4	30.4	0.45	30.4	30.4	0.45	30.4	30.4	0.45	30.4	30.4	0.45	30.4	30.4	0.42	30.5	30.7	0.40
	72	30.1	30.1	0.49	30.1	30.1	0.49	30.1	30.1	0.49	30.2	30.2	0.49	30.1	30.1	0.49	30.2	30.2	0.50	30.2	30.6	0.44
	75	29.8	29.8	0.56	29.8	29.8	0.56	29.8	29.8	0.56	29.8	29.8	0.56	29.8	29.8	0.56	29.8	29.8	0.56	29.8	30.5	0.52
	79	29.3	29.3	0.64	29.3	29.3	0.64	29.3	29.3	0.64	29.3	29.3	0.64	29.3	29.3	0.64	29.3	29.3	0.65	29.3	30.2	0.61
	83	28.8	28.8	0.73	28.8	28.8	0.73	28.8	28.8	0.73	28.9	28.9	0.73	28.8	28.8	0.73	28.9	28.9	0.73	28.8	29.9	0.71
	87	28.4	28.4	0.81	28.4	28.4	0.81	28.4	28.4	0.81	28.4	28.4	0.81	28.3	28.3	0.81	28.4	28.4	0.82	28.3	29.7	0.80
	91	27.9	27.9	0.90	27.9	27.9	0.90	27.9	27.9	0.90	27.9	27.9	0.90	27.9	27.9	0.90	27.9	27.9	0.90	27.7	29.4	0.89
	93	27.7	27.7	0.94	27.7	27.7	0.94	27.7	27.7	0.94	27.7	27.7	0.94	27.6	27.6	0.94	27.7	27.7	0.95	27.5	27.5	0.94
	95	27.4	27.4	0.98	27.4	27.4	0.98	27.4	27.4	0.98	27.4	27.4	0.98	27.4	27.4	0.98	27.4	27.4	0.99	27.2	27.2	0.99
	99	27.0	27.0	1.07	27.0	27.0	1.07	27.0	27.0	1.07	27.0	27.0	1.07	26.9	26.9	1.07	27.0	27.0	1.08	26.7	26.7	1.08
	103	26.5	26.5	1.15	26.5	26.5	1.15	26.5	26.5	1.15	26.5	26.5	1.15	26.5	26.5	1.15	26.5	26.5	1.16	26.2	26.2	1.18
	106	26.1	26.1	1.22	26.1	26.1	1.22	26.1	26.1	1.22	26.1	26.1	1.22	26.1	26.1	1.22	26.1	26.1	1.23	25.8	25.8	1.25
	110	25.7	25.7	1.30	25.7	25.7	1.30	25.7	25.7	1.30	25.7	25.7	1.30	25.6	25.6	1.30	25.7	25.7	1.31	25.2	25.2	1.35
	115	25.1	25.1	1.41	25.1	25.1	1.41	25.1	25.1	1.41	25.1	25.1	1.41	25.0	25.0	1.41	25.1	25.1	1.42	24.6	24.6	1.46
	118	24.7	24.7	1.47	24.7	24.7	1.47	24.7	24.7	1.47	24.7	24.7	1.47	24.7	24.7	1.47	24.7	24.7	1.49	24.2	24.2	1.53
	122	24.2	24.2	1.56	24.2	24.2	1.56	24.2	24.2	1.56	24.2	24.2	1.56	24.2	24.2	1.56	24.3	24.3	1.57	23.7	23.7	1.63

TC: Evaporator Total Capacity (1,000 BTU/h) Net TC = TC - Blower input

SC: Evaporator Sensible Capacity(1,000 BTU/h) Net SC = SC - Blower input

PI: Power input(kW) Compressor + outdoor fan System PI = PI + Blower input

Note: TC and SC represent the evaporator's heat load and do not account for the blower input. To calculate the net capacity, subtract the blower input from each value.

is shown as reference data

The blank areas indicate that operation at this compressor speed is not possible under those conditions.

ID DB		70												75																	
ID WB		57			61			64			67			57			61			64			67			70			72		
ID CFM	OD DB	TC	SC	PI	TC	SC	PI	TC	SC	PI	TC	SC	PI	TC	SC	PI	TC	SC	PI	TC	SC	PI	TC	SC	PI	TC	SC	PI	TC	SC	PI
	23	94.9	82.6	3.99	104.9	70.0	4.04	110.4	57.9	3.93	117.1	48.3	3.79	98.1	98.1	4.01	104.7	86.4	4.03	110.4	74.1	3.93	117.1	65.1	3.79	124.1	55.9	3.63	128.6	48.4	3.53
	30	94.7	82.5	4.02	104.8	69.9	4.08	110.3	57.8	3.97	116.9	48.3	3.83	98.0	98.0	4.04	104.5	86.3	4.07	110.3	74.0	3.97	116.9	65.0	3.83	123.9	55.8	3.67	128.4	48.3	3.56
	40	94.6	82.4	4.05	104.6	69.8	4.13	110.1	57.7	4.03	116.7	48.2	3.88	97.8	97.8	4.07	104.3	86.1	4.13	110.1	73.9	4.03	116.7	64.8	3.88	123.6	55.7	3.72	128.2	48.2	3.61
	50	94.4	82.2	4.08	104.4	69.6	4.19	109.8	57.6	4.08	116.4	48.1	3.93	97.6	97.6	4.10	104.1	85.9	4.18	109.8	73.7	4.08	116.4	64.7	3.93	123.4	55.6	3.77	127.9	48.1	3.66
	54	94.3	82.2	4.10	104.3	69.6	4.12	109.7	57.5	4.12	116.3	48.0	4.10	97.6	97.6	4.12	104.0	85.8	4.12	109.7	73.7	4.12	116.3	64.7	4.10	123.3	55.5	4.08	127.8	48.1	4.07
	58	94.3	82.1	4.40	104.2	69.5	4.44	109.7	57.5	4.45	116.3	48.0	4.44	97.5	97.5	4.42	104.0	85.8	4.44	109.7	73.6	4.45	116.3	64.6	4.44	123.2	55.5	4.44	127.7	48.1	4.43
	62	94.1	81.9	4.73	103.9	69.4	4.78	109.3	57.4	4.79	115.9	47.9	4.79	97.3	97.3	4.75	103.7	85.7	4.78	109.3	73.5	4.79	115.9	64.5	4.79	122.8	55.4	4.78	127.3	48.0	4.78
	66	93.0	81.0	5.06	102.4	68.9	5.12	107.7	57.0	5.13	114.2	47.6	5.13	96.1	96.1	5.08	102.1	85.1	5.11	107.7	73.0	5.13	114.2	64.1	5.13	121.0	55.0	5.13	125.5	47.7	5.13
	70	91.8	80.3	5.38	100.9	68.5	5.45	106.1	56.6	5.47	112.5	47.3	5.47	95.0	95.0	5.41	100.6	84.5	5.45	106.1	72.5	5.47	112.5	63.6	5.47	119.2	54.6	5.47	123.6	47.3	5.47
	72	91.3	80.0	5.55	100.1	68.2	5.62	105.3	56.4	5.64	111.7	47.1	5.64	94.4	94.4	5.58	99.9	84.1	5.62	105.3	72.2	5.64	111.7	63.4	5.64	118.3	54.4	5.65	122.7	47.1	5.65
	75	90.4	79.5	5.80	99.0	67.8	5.87	104.1	56.1	5.90	110.4	46.8	5.90	93.5	93.5	5.83	98.7	83.7	5.87	104.1	71.8	5.90	110.4	63.0	5.90	117.0	54.1	5.91	121.3	46.9	5.91
2700	79	89.3	78.7	6.12	97.4	67.3	6.21	102.5	55.6	6.24	108.7	46.4	6.24	92.3	92.3	6.16	97.2	83.0	6.21	102.5	71.2	6.24	108.7	62.5	6.24	115.2	53.7	6.25	119.4	46.5	6.26
CFM	83	88.2	78.0	6.45	95.9	66.0	6.55	100.9	55.2	6.58	107.0	46.1	6.59	91.2	91.2	6.49	95.7	81.5	6.54	100.9	70.7	6.58	107.0	62.0	6.59	113.4	53.3	6.60	117.5	46.1	6.61
	87	87.1	77.3	6.78	94.4	65.2	6.88	99.3	54.7	6.92	105.3	45.7	6.93	90.0	90.0	6.82	94.2	80.5	6.88	99.3	70.1	6.92	105.3	61.5	6.93	111.6	52.8	6.94	115.7	45.8	6.95
	91	85.9	76.6	7.11	92.9	64.4	7.22	97.8	54.2	7.26	103.6	45.3	7.27	88.8	88.8	7.15	92.7	79.4	7.22	97.8	69.5	7.26	103.6	61.0	7.27	109.8	52.3	7.29	113.8	45.4	7.30
	93	85.4	76.2	7.27	92.1	64.0	7.39	97.0	54.0	7.43	102.8	45.1	7.44	88.3	88.3	7.31	91.9	78.9	7.38	97.0	69.1	7.43	102.8	60.7	7.44	108.9	52.1	7.46	112.9	45.1	7.47
	95	84.8	75.9	7.44	91.4	63.6	7.56	96.2	53.8	7.60	101.9	44.9	7.62	87.7	87.7	7.48	91.2	78.4	7.55	96.2	68.8	7.60	101.9	60.4	7.62	108.0	51.9	7.64	112.0	44.9	7.65
	99	83.7	75.1	7.77	89.8	62.7	7.89	94.6	53.3	7.94	100.2	44.5	7.96	86.5	86.5	7.81	89.6	77.4	7.89	94.6	68.2	7.94	100.2	59.8	7.96	106.2	51.4	7.98	110.1	44.5	8.00
	103	82.5	74.4	8.10	88.3	61.9	8.23	93.0	52.7	8.28	98.5	44.0	8.30	85.4	85.4	8.14	88.1	76.3	8.23	93.0	67.5	8.28	98.5	59.3	8.30	104.4	50.9	8.33	108.2	44.1	8.34
	106	81.7	73.8	8.34	87.2	61.2	8.48	91.8	52.3	8.53	97.3	43.7	8.56	84.5	84.5	8.39	87.0	75.6	8.48	91.8	67.0	8.53	97.3	58.8	8.56	103.1	50.5	8.59	106.8	43.8	8.60
	110	80.6	73.0	8.67	85.7	60.4	8.82	90.2	51.8	8.87	95.6	43.2	8.90	83.3	83.3	8.72	85.5	74.5	8.81	90.2	66.3	8.87	95.6	58.2	8.90	101.3	50.0	8.93	105.0	43.3	8.95
	115	79.2	72.1	9.08	83.8	59.3	9.24	88.2	51.1	9.30	93.5	42.7	9.33	81.9	81.9	9.13	83.6	73.2	9.23	88.2	65.4	9.30	93.5	57.4	9.33	99.0	49.3	9.36	102.7	42.7	9.39
	118	78.3	71.5	9.33	82.6	58.7	9.49	87.0	50.7	9.55	92.2	42.3	9.59	81.0	81.0	9.38	82.4	72.4	9.49	87.0	64.9	9.55	92.2	56.9	9.59	97.7	48.9	9.62	101.3	42.4	9.65
	122																														
	23	97.1	87.1	3.99	107.4	73.8	4.04	113.0	61.1	3.93	119.8	51.0	3.79	100.4	100.4	4.01	107.1	91.1	4.03	113.0	78.2	3.93	119.8	68.6	3.79	127.0	58.9	3.63	131.6	51.0	3.53
	30	97.0	87.0	4.01	107.2	73.7	4.07	112.9	61.0	3.97	119.6	50.9	3.83	100.3	100.3	4.04	107.0	91.0	4.07	112.9	78.1	3.97	119.6	68.5	3.83	126.8	58.8	3.66	131.4	51.0	3.56
	40	96.8	86.8	4.05	107.0	73.6	4.13	112.6	60.9	4.02	119.4	50.8	3.88	100.1	100.1	4.07	106.8	90.8	4.13	112.6	77.9	4.02	119.4	68.4	3.88	126.5	58.7	3.71	131.2	50.9	3.61
	50	96.6	86.7	4.08	106.8	73.4	4.19	112.4	60.7	4.08	119.2	50.7	3.93	99.9	99.9	4.10	106.6	90.6	4.18	112.4	77.8	4.08	119.2	68.2	3.93	126.3	58.6	3.76	130.9	50.8	3.66
	54	96.6	86.6	4.09	106.7	73.4	4.12	112.3	60.7	4.12	119.1	50.7	4.10	99.8	99.8	4.12	106.5	90.5	4.12	112.3	77.7	4.12	119.1	68.2	4.10	126.2	58.5	4.08	130.8	50.7	4.07
	58	96.5	86.6	4.40	106.6	73.3	4.44	112.2	60.6	4.45	119.0	50.6	4.44	99.8	99.8	4.42	106.4	90.5	4.44	112.2	77.6	4.45	119.0	68.1	4.44	126.1	58.5	4.43	130.7	50.7	4.43
	62	96.3	86.4	4.72	106.3	73.2	4.78	111.9	60.5	4.79	118.6	50.5	4.78	99.6	99.6	4.75	106.1	90.3	4.78	111.9	77.5	4.79	118.6	68.0	4.78	125.7	58.4	4.78	130.3	50.6	4.78
	66	95.1	85.4	5.05	104.8	72.7	5.11	110.3	60.1	5.13	116.9	50.2	5.13	98.4	98.4	5.08	104.5	89.7	5.11	110.3	77.0	5.13	116.9	67.6	5.13	123.9	58.0	5.13	128.4	50.3	5.13
	70	94.0	84.7	5.38	103.2	72.2	5.45	108.6	59.7	5.47	115.2	49.8	5.47	97.2	97.2	5.41	103.0	89.1	5.45	108.6	76.4	5.47	115.2	67.1	5.47	122.0	57.6	5.47	126.5	49.9	5.47
	72	93.4	84.3	5.55	102.4	71.9	5.62	107.8	59.5	5.64	114.3	49.7	5.64	96.6	96.6	5.58	102.2	88.7	5.62	107.8	76.2	5.64	114.3	66.8	5.64	121.1	57.4	5.64	125.5	49.7	5.65
	75	92.5	83.8	5.79	101.3	71.5	5.87	106.6	59.1	5.89	113.0	49.4	5.90	95.7	95.7	5.82	101.0	88.2	5.87	106.6	75.7	5.89	113.0	66.5	5.90	119.7	57.1	5.90	124.1	49.4	5.91
3100	79	91.4	83.0	6.12	99.7	71.0	6.21	104.9	58.7	6.23	111.3	49.0	6.24	94.5	94.5	6.15	99.5	87.5	6.21	104.9	75.1	6.23	111.3	65.9	6.24	117.9	56.6	6.25	122.2	49.1	6.26
CFM	83	90.2	82.3	6.45	98.2	69.6	6.54	103.3	58.2	6.57	109.5	48.6	6.58	93.3	93.3	6.48	97.9	85.9	6.54	103.3	74.5	6.57	109.5	65.4	6.58	116.1	56.2	6.60	120.3	48.7	6.60
	87	89.1	81.5	6.78	96.6	68.8	6.88	101.7	57.7	6.91	107.8	48.2	6.93	92.1	92.1	6.81	96.4	84.8	6.88	101.7	73.9	6.91	107.8	64.9	6.93	114.2	55.7	6.94	118.4	48.2	6.95
	91	87.9	80.8	7.11	95.1	67.9	7.22	100.0	57.2	7.25	106.1	47.8	7.27	90.9	90.9	7.14	94.8	83.8	7.21	100.0	73.2	7.25	106.1	64.3	7.27	112.4	55.2	7.29	116.5	47.8	7.30
	93	87.4	80.4	7.27	94.3	67.5	7.39	99.2	57.0	7.42	105.2	47.5	7.44	90.3	90.3	7.31	94.1	83.2	7.38	99.2	72.9	7.42	105.2	64.0	7.44	111.5	55.0	7.46	115.5	47.6	7.47
	95	86.8	80.0	7.44	93.5	67.0	7.55	98.4	56.7	7.59	104.3	47.3	7.61	89.7	89.7	7.47	93.3	82.7	7.55	98.4	72.6	7.59	104.3	63.7	7.61	110.5	54.7	7.63	114.6	47.4	7.65
	99	85.6	79.2	7.76	91.9	66.2	7.89	96.8	56.2	7.93	102.6	46.9	7.96	88.5	88.5	7.81	91.7	81.6	7.89	96.8	71.9	7.93	102.6	63.1	7.96	108.7	54.2	7.98	112.7	47.0	7.99
	103	84.5	78.4	8.09	90.4	65.3	8.23	95.1	55.6	8.27	100.8	46.4	8.30	87.3	87.3	8.14	90.2	80.5	8.22	95.1	71.2	8.27	100.8	62.5	8.30	106.9	53.7	8.32	110.8	46.5	8.34
	106	83.6	77.8	8.34	89.2	64.6	8.48	93.9	55.2	8.53	99.5	46.1	8.56	86.5	86.5	8.38	89.0	79.7	8.47	93.9	70.7	8.53	99.5	62.0	8.56	105.5	53.3	8.58	109.3	46.1	8.60
	110	82.5	77.0	8.67	87.7	63.7	8.82	92.3	54.6	8.87	97.8	45.6	8.90	85.3	85.3	8.71	87.5	78.6	8.81	92.3	69.9	8.87	97.8	61.4	8.90	103.6	52.7	8.93	107.4	45.7	8.95
	115	81.0	76.0	9.08	85.7	62.6	9.24	90.2	53.9	9.30	95.6	45.0	9.33	83.8	83.8	9.13	85.5	77.2	9.23	90.2	69.0	9.30	95.6	60.6	9.33	101.3	52.0	9.36	105.1	45.1	9.38
	118	80.2	75.4	9.33	84.6	61.9	9.49	89.0	53.5	9.55	94.3	44.6	9.59	82.9	82.9	9.37	84.4	76.3	9.48	89.0	68.4	9.55	94.3	60.1	9.59	100.0	51.6	9.62	103.6	44.7	9.64
	122																														
	23	98.8	90.7	3.99	109.3	76.8	4.03	115.1	63.6	3.93	122.0	53.1	3.79	102.2	102.2	4.01	109.1	94.8	4.03	115.1	81.4	3.93	122.0	71.4	3.79	129.2	61.3	3.63	134.0	53.1	3.53
	30	98.7	90.6	4.01	109.2	76.7	4.07	114.9	63.5	3.97	121.8	53.0	3.82	102.1	102.1	4.03	108.9	94.7	4.07	114.9	81.3	3.97	121.8	71.3	3.82	129.1	61.2	3.66	133.8	53.1	3.56
	40	98.5	90.4	4.05	108.9	76.6	4.13	114.7	63.3	4.02	121.6	52.9	3.88	101.9	101.9	4.07	108.7	94.5	4.13	114.7	81.1	4.02	121.6	71.2	3.88	128.8	61.1	3.71	133.5	52.9	3.61
	50	98.4	90.2	4.08	108.7	76.4	4.18	114.4	63.2	4.08	121.3	52.8	3.93	101.7	101.7	4.10	108.5	94.3	4.18	114.4	80.9	4.08	121.3	71.0	3.93	128.5	61.0	3.76	133.3	52.8	3.66
	54	98.3	90.2	4.09	108.6	76.4	4.12	114.3	63.2	4.11	121.2	52.7	4.10	101.6	101.6	4.11	108.4	94.2	4.12	114.3	80.9	4.11	121.2	71.0	4.10	128.4	60.9	4.08	133.1	52.8	4.07
	58	98.2	90.1	4.39	108.6	76.3	4.44	114.2	63.1	4.45	121.1	52.7	4.44	101.6	101.6	4.42	108.3	94.2	4.44	114.2	80.8	4.45	121.1	70.9	4.44	128.3	60.9	4.43	133.0	52.8	4.43
	62	98.0	89.9	4.72	108.2	76.2	4.78	113.9	63.0	4.79	120.8	52.6	4.78	101.3	101.3	4.75	108.0	94.0	4.77	113.9	80.7	4.79	120.8	70.8	4.78	128.0	60.8	4.78	132.6	52.7	4.78
	66	96.8	88.9	5.05	106.7	75.7	5.11	112.2	62.6	5.13	119.0	52.2	5.13	100.1	100.1	5.08	106.4	93.4	5.11	112.2	80.1	5.13	119.0	70.3	5.13	126.1	60.4	5.12	130.7	52.3	5.12
	70	95.7	88.2	5.38	105.1	75.1	5.45	110.6	62.1	5.47	117.2	51.9	5.47	98.9	98.9	5.41	104.8	92.7	5.45	110.6	79.6	5.47	117.2	69.8	5.47	124.2	60.0	5.47	128.8	51.9	5.47
	72	95.1	87.8	5.54	104.3	74.9	5.62	109.8	61.9	5.64	116.3	51.7	5.64	98.3	98.3	5.57	104.0	92.4	5.61	109.8	79.3	5.64	116.3	69.6	5.64	123.3	59.7	5.64	127.8	51.8	5.64
	75	94.2	87.2	5.79	103.1	74.4	5.87	108.5	61.6	5.89	115.0	51.4	5.90	97.4	97.4	5.82	102.9	91.8	5.87	108.5	78.8	5.89	115.0	69.2	5.90	121.9	59.4	5.90	126.3	51.5	5.91
3500	79	93.0	86.4	6.12	101.5	73.9	6.21	106.8	61.1	6.23	113.3	51.0	6.24	96.2	96.2	6.15	101.3	91.1	6.20	106.8	78.2	6.23	113.3	68.6	6.24	120.0	58.9	6.25	124.4	51.1	6.25
CFM	83	91.9	85.7	6.45	99.9	72.5	6.54	105.2	60.6	6.57	111.5	50.6	6.58	95.0	95.0	6.48	99.7	89.4	6.54	105.2	77.6	6.57	111.5	68.1	6.58	118.1	58.5	6.59	122.5	50.6	6.60
	87	90.7	84.9	6.78	98.3	71.6	6.88	103.5	60.1	6.91	109.7	50.1	6.93	93.8	93.8	6.81	98.1	88.3	6.87	103.5	76.9	6.91	109.7	67.5	6.93	116.3	58.0	6.94	120.5	50.2	6.95
	91	89.5	84.1	7.10	96.8	70.7	7.21	101.8	59.5	7.25	108.0	49.7	7.27	92.6	92.6	7.14	96.5	87.2	7.21	101.8	76.2	7.25	108.0	66.9	7.27	114.4	57.5	7.28	118.6	49.8	7.29
	93	88.9	83.7	7.27	96.0	70.2	7.38	101.0	59.3	7.42	107.1	49.5	7.44	92.0	92.0	7.31	95.8	86.6	7.38	101.0	75.9	7.42	107.1	66.6	7.44	113.5	57.2	7.46	117.6	49.6	7.47
	95	88.3	83.3	7.43	95.2	69.8	7.55	100.2	59.0	7.59	106.2	49.3	7.61	91.3	91.3	7.47	95.0	86.1	7.55	100.2	75.6	7.59	106.2	66.3	7.61	112.5	56.9	7.63	116.6	49.3	7.64
	99	87.2	82.5	7.76	93.6	68.9	7.89	98.5	58.5	7.93	104.4	48.8	7.95	90.1	90.1	7.80	93.4	84.9	7.88	98.5	74.8	7.93	104.4	65.7	7.95	110.7	56.4	7.98	114.7	48.9	7.99
	103	86.0	81.6	8.09	92.0	67.9	8.22	96.8	57.9	8.27	102.7	48.3	8.30	88.9	88.9	8.13	91.8	83.8	8.22	96.8	74.1	8.27	102.7	65.0	8.30	108.8	55.9	8.32	112.8	48.4	8.34
	106	85.1	81.0	8.34	90.8	67.2	8.48	95.6	57.5	8.53	101.3	48.0	8.55	88.0	88.0	8.38	90.6	82.9	8.47	95.6	73.6	8.53	101.3	64.6	8.55	107.4	55.4	8.58	111.3	48.0	8.60
	110	84.0	80.2	8.67	89.3	66.3	8.81	93.9	56.9	8.87	99.6	47.5	8.90	86.8	86.8	8.71	89.0	81.8	8.81	93.9	72.8	8.87	99.6	63.9	8.90	105.5	54.9	8.93	109.4	47.5	8.95
	115	82.5	79.1	9.08	87.3	65.1	9.23	91.8	56.1	9.29	97.4	46.8	9.32	85.3	85.3	9.12	87.1	80.3	9.23	91.8	71.8	9.29	97.4	63.0	9.32	103.2	54.1	9.36	107.0	46.9	9.38
	118	81.6	78.5	9.32	86.1	64.4	9.48	90.6	55.6	9.55	96.0	46.4	9.58	84.4	84.4	9.37	85.9	79.4	9.48	90.6	71.2	9.55	96.0	62.5	9.58	101.8	53.7	9.62	105.5	46.5	9.64
	122																														

TC: Evaporator Total Capacity (1,000 BTU/h) Net TC = TC - Blower input

SC: Evaporator Sensible Capacity(1,000 BTU/h) Net SC = SC - Blower input

PI: Power input(kW) Compressor + outdoor fan System PI = PI + Blower input

Note: TC and SC represent the evaporator's heat load and do not account for the blower input. To calculate the net capacity, subtract the blower input from each value.

is shown as reference data

The blank areas indicate that operation at this compressor speed is not possible under those conditions.

ID DB		80																				
ID WB		57			61			64			67			70			72			75		
ID CFM	OD DB	TC	SC	PI	TC	SC	PI	TC	SC	PI	TC	SC	PI	TC	SC	PI	TC	SC	PI	TC	SC	PI
2700 CFM	23	104.0	104.0	4.05	106.5	99.1	4.05	110.4	90.0	3.93	117.1	81.3	3.79	124.1	72.4	3.63	128.6	65.2	3.53	135.5	56.2	3.37
	30	103.8	103.8	4.08	106.4	99.0	4.09	110.3	89.9	3.97	116.9	81.2	3.83	123.9	72.3	3.67	128.4	65.1	3.56	135.4	56.1	3.40
	40	103.6	103.6	4.11	106.2	98.8	4.14	110.1	89.7	4.03	116.7	81.0	3.88	123.6	72.2	3.72	128.2	64.9	3.61	135.1	56.0	3.44
	50	103.5	103.5	4.14	106.0	98.6	4.20	109.8	89.5	4.08	116.4	80.8	3.93	123.4	72.0	3.77	127.9	64.8	3.66	134.9	55.9	3.73
	54	103.4	103.4	4.16	105.9	98.5	4.13	109.7	89.4	4.12	116.3	80.8	4.10	123.3	72.0	4.08	127.8	64.8	4.07	134.8	55.8	4.08
	58	103.3	103.3	4.47	105.8	98.4	4.46	109.7	89.4	4.45	116.3	80.7	4.44	123.2	71.9	4.44	127.7	64.7	4.43	134.7	55.8	4.44
	62	103.1	103.1	4.80	105.5	98.3	4.79	109.3	89.3	4.79	115.9	80.6	4.79	122.8	71.8	4.78	127.3	64.6	4.78	133.7	55.4	4.80
	66	101.9	101.9	5.13	103.9	97.6	5.13	107.7	88.6	5.13	114.2	80.0	5.13	121.0	71.3	5.13	125.5	64.2	5.13	131.8	54.6	5.16
	70	100.6	100.6	5.47	102.4	96.9	5.47	106.1	88.0	5.47	112.5	79.5	5.47	119.2	70.8	5.47	123.6	63.7	5.47	129.9	54.0	5.51
	72	100.0	100.0	5.63	101.6	96.6	5.64	105.3	87.7	5.64	111.7	79.2	5.64	118.3	70.5	5.65	122.7	63.5	5.65	128.9	53.7	5.69
	75	99.1	99.1	5.88	100.5	96.0	5.89	104.1	87.2	5.90	110.4	78.7	5.90	117.0	70.1	5.91	121.3	63.1	5.91	127.5	53.3	5.96
	79	97.9	97.9	6.22	98.9	95.3	6.23	102.5	86.5	6.24	108.7	78.1	6.24	115.2	69.6	6.25	119.4	62.6	6.26	125.5	52.7	6.31
	83	96.6	96.6	6.55	97.4	97.4	6.57	100.9	85.8	6.58	107.0	77.5	6.59	113.4	69.0	6.60	117.5	62.1	6.61	123.6	52.1	6.67
	87	95.4	95.4	6.89	95.8	95.8	6.90	99.3	85.1	6.92	105.3	76.8	6.93	111.6	68.5	6.94	115.7	61.6	6.95	121.7	51.4	7.03
	91	94.2	94.2	7.22	94.3	94.3	7.24	97.8	84.3	7.26	103.6	76.2	7.27	109.8	67.9	7.29	113.8	61.1	7.30	119.8	50.8	7.39
	93	93.5	93.5	7.39	93.5	93.5	7.41	97.0	84.0	7.43	102.8	75.8	7.44	108.9	67.6	7.46	112.9	60.8	7.47	118.8	50.5	7.56
	95	92.9	92.9	7.55	92.8	92.8	7.58	96.2	83.6	7.60	101.9	75.5	7.62	108.0	67.2	7.64	112.0	60.5	7.65	117.8	50.2	7.74
	99	91.7	91.7	7.89	91.2	91.2	7.92	94.6	82.8	7.94	100.2	74.8	7.96	106.2	66.6	7.98	110.1	59.9	8.00	115.9	49.5	8.10
	103	90.5	90.5	8.22	89.7	89.7	8.25	93.0	82.0	8.28	98.5	74.0	8.30	104.4	66.0	8.33	108.2	59.4	8.34	114.0	48.9	8.46
	106	89.5	89.5	8.47	88.5	88.5	8.51	91.8	81.4	8.53	97.3	73.5	8.56	103.1	65.5	8.59	106.8	58.9	8.60	112.6	48.4	8.72
	110	88.3	88.3	8.80	87.0	87.0	8.84	90.2	80.5	8.87	95.6	72.7	8.90	101.3	64.8	8.93	105.0	58.3	8.95	110.6	47.7	9.08
	115	86.8	86.8	9.22	85.0	85.0	9.27	88.2	79.5	9.30	93.5	71.7	9.33	99.0	63.9	9.36	102.7	57.5	9.39	108.2	46.9	9.53
	118	85.8	85.8	9.47	83.9	83.9	9.52	87.0	78.8	9.55	92.2	71.1	9.59	97.7	63.4	9.62	101.3	57.0	9.65	106.8	46.4	9.79
	122																					
3100 CFM	23	106.4	106.4	4.05	109.0	104.6	4.05	113.0	94.9	3.93	119.8	85.7	3.79	127.0	76.4	3.63	131.6	68.7	3.53	138.7	59.2	3.37
	30	106.3	106.3	4.08	108.9	104.4	4.09	112.9	94.8	3.97	119.6	85.6	3.83	126.8	76.3	3.66	131.4	68.6	3.56	138.5	59.1	3.40
	40	106.1	106.1	4.11	108.7	104.2	4.14	112.6	94.6	4.02	119.4	85.4	3.88	126.5	76.1	3.71	131.2	68.5	3.61	138.3	59.0	3.44
	50	105.9	105.9	4.14	108.4	104.0	4.20	112.4	94.4	4.08	119.2	85.3	3.93	126.3	76.0	3.76	130.9	68.3	3.66	138.0	58.9	3.73
	54	105.8	105.8	4.16	108.3	103.9	4.13	112.3	94.3	4.12	119.1	85.2	4.10	126.2	75.9	4.08	130.8	68.3	4.07	137.9	58.9	4.08
	58	105.7	105.7	4.46	108.3	103.8	4.45	112.2	94.3	4.45	119.0	85.1	4.44	126.1	75.8	4.43	130.7	68.2	4.43	137.8	58.8	4.44
	62	105.5	105.5	4.80	107.9	103.7	4.79	111.9	94.1	4.79	118.6	85.0	4.78	125.7	75.7	4.78	130.3	68.1	4.78	136.8	58.4	4.80
	66	104.3	104.3	5.13	106.4	103.0	5.13	110.3	93.5	5.13	116.9	84.4	5.13	123.9	75.2	5.13	128.4	67.7	5.13	134.9	57.6	5.15
	70	103.0	103.0	5.46	104.8	102.2	5.47	108.6	92.8	5.47	115.2	83.8	5.47	122.0	74.7	5.47	126.5	67.2	5.47	132.9	57.0	5.51
	72	102.4	102.4	5.63	104.0	101.9	5.64	107.8	92.5	5.64	114.3	83.5	5.64	121.1	74.4	5.64	125.5	66.9	5.65	131.9	56.7	5.69
	75	101.4	101.4	5.88	102.8	101.3	5.89	106.6	91.9	5.89	113.0	83.0	5.90	119.7	74.0	5.90	124.1	66.6	5.91	130.4	56.2	5.96
	79	100.2	100.2	6.22	101.2	100.5	6.23	104.9	91.2	6.23	111.3	82.4	6.24	117.9	73.4	6.25	122.2	66.0	6.26	128.5	55.5	6.31
	83	98.9	98.9	6.55	99.7	99.7	6.56	103.3	90.5	6.57	109.5	81.7	6.58	116.1	72.8	6.60	120.3	65.5	6.60	126.5	54.9	6.67
	87	97.6	97.6	6.88	98.1	98.1	6.90	101.7	89.7	6.91	107.8	81.0	6.93	114.2	72.2	6.94	118.4	65.0	6.95	124.5	54.2	7.03
	91	96.4	96.4	7.22	96.5	96.5	7.24	100.0	88.9	7.25	106.1	80.3	7.27	112.4	71.6	7.29	116.5	64.4	7.30	122.6	53.6	7.38
	93	95.7	95.7	7.38	95.7	95.7	7.41	99.2	88.5	7.42	105.2	80.0	7.44	111.5	71.2	7.46	115.5	64.1	7.47	121.6	53.2	7.56
	95	95.1	95.1	7.55	94.9	94.9	7.58	98.4	88.1	7.59	104.3	79.6	7.61	110.5	70.9	7.63	114.6	63.8	7.65	120.6	52.9	7.74
	99	93.8	93.8	7.88	93.3	93.3	7.91	96.8	87.3	7.93	102.6	78.8	7.96	108.7	70.3	7.98	112.7	63.2	7.99	118.6	52.2	8.10
	103	92.6	92.6	8.22	91.8	91.8	8.25	95.1	86.5	8.27	100.8	78.1	8.30	106.9	69.6	8.32	110.8	62.6	8.34	116.7	51.5	8.45
	106	91.6	91.6	8.47	90.6	90.6	8.50	93.9	85.8	8.53	99.5	77.5	8.56	105.5	69.0	8.58	109.3	62.1	8.60	115.2	51.0	8.72
	110	90.4	90.4	8.80	89.0	89.0	8.84	92.3	84.9	8.87	97.8	76.7	8.90	103.6	68.3	8.93	107.4	61.5	8.95	113.2	50.3	9.08
	115	88.8	88.8	9.22	87.0	87.0	9.26	90.2	83.8	9.30	95.6	75.7	9.33	101.3	67.4	9.36	105.1	60.7	9.38	110.8	49.4	9.52
	118	87.8	87.8	9.47	85.9	85.9	9.52	89.0	83.1	9.55	94.3	75.0	9.59	100.0	66.9	9.62	103.6	60.2	9.64	109.3	48.9	9.79
	122																					
3500 CFM	23	108.3	108.3	4.05	111.0	108.8	4.05	115.1	98.8	3.93	122.0	89.2	3.79	129.2	79.5	3.63	134.0	71.5	3.53	141.2	61.6	3.37
	30	108.2	108.2	4.07	110.8	108.7	4.08	114.9	98.7	3.97	121.8	89.1	3.82	129.1	79.4	3.66	133.8	71.4	3.56	141.0	61.6	3.40
	40	108.0	108.0	4.11	110.6	108.5	4.14	114.7	98.5	4.02	121.6	88.9	3.88	128.8	79.2	3.71	133.5	71.3	3.61	140.8	61.4	3.44
	50	107.8	107.8	4.14	110.4	108.2	4.20	114.4	98.3	4.08	121.3	88.7	3.93	128.5	79.1	3.76	133.3	71.1	3.66	140.5	61.3	3.73
	54	107.7	107.7	4.16	110.3	108.2	4.13	114.3	98.2	4.11	121.2	88.7	4.10	128.4	79.0	4.08	133.1	71.1	4.07	140.4	61.3	4.08
	58	107.6	107.6	4.46	110.2	108.1	4.45	114.2	98.1	4.45	121.1	88.6	4.44	128.3	78.9	4.43	133.0	71.0	4.43	140.3	61.2	4.44
	62	107.4	107.4	4.80	109.9	107.9	4.79	113.9	98.0	4.79	120.8	88.5	4.78	128.0	78.8	4.78	132.6	70.9	4.78	139.3	60.8	4.79
	66	106.1	106.1	5.13	108.3	107.2	5.13	112.2	97.3	5.13	119.0	87.9	5.13	126.1	78.3	5.12	130.7	70.4	5.12	137.3	60.0	5.15
	70	104.8	104.8	5.46	106.7	106.4	5.46	110.6	96.6	5.47	117.2	87.2	5.47	124.2	77.7	5.47	128.8	69.9	5.47	135.3	59.3	5.51
	72	104.2	104.2	5.63	105.9	106.0	5.63	109.8	96.2	5.64	116.3	86.9	5.64	123.3	77.4	5.64	127.8	69.7	5.64	134.3	59.0	5.69
	75	103.2	103.2	5.88	104.7	105.4	5.89	108.5	95.7	5.89	115.0	86.4	5.90	121.9	77.0	5.90	126.3	69.3	5.91	132.8	58.5	5.95
	79	102.0	102.0	6.21	103.1	104.6	6.22	106.8	94.9	6.23	113.3	85.7	6.24	120.0	76.4	6.25	124.4	68.7	6.25	130.8	57.8	6.31
	83	100.7	100.7	6.55	101.5	101.5	6.56	105.2	94.2	6.57	111.5	85.0	6.58	118.1	75.8	6.59	122.5	68.2	6.60	128.8	57.1	6.67
	87	99.4	99.4	6.88	99.8	99.8	6.90	103.5	93.4	6.91	109.7	84.3	6.93	116.3	75.1	6.94	120.5	67.6	6.95	126.8	56.4	7.02
	91	98.1	98.1	7.21	98.2	98.2	7.24	101.8	92.6	7.25	108.0	83.6	7.27	114.4	74.5	7.28	118.6	67.0	7.29	124.8	55.8	7.38
	93	97.5	97.5	7.38	97.4	97.4	7.40	101.0	92.2	7.42	107.1	83.2	7.44	113.5	74.2	7.46	117.6	66.7	7.47	123.8	55.4	7.56
	95	96.8	96.8	7.55	96.6	96.6	7.57	100.2	91.7	7.59	106.2	82.8	7.61	112.5	73.8	7.63	116.6	66.4	7.64	122.8	55.1	7.74
	99	95.5	95.5	7.88	95.0	95.0	7.91	98.5	90.9	7.93	104.4	82.1	7.95	110.7	73.1	7.98	114.7	65.8	7.99	120.8	54.4	8.09
	103	94.2	94.2	8.21	93.4	93.4	8.25	96.8	90.0	8.27	102.7	81.3	8.30	108.8	72.4	8.32	112.8	65.1	8.34	118.8	53.6	8.45
	106	93.3	93.3	8.46	92.2	92.2	8.50	95.6	89.3	8.53	101.3	80.7	8.55	107.4	71.9	8.58	111.3	64.7	8.60	117.3	53.1	8.72
	110	92.0	92.0	8.80	90.6	90.6	8.84	93.9	88.4	8.87	99.6	79.8	8.90	105.5	71.1	8.93	109.4	64.0	8.95	115.3	52.4	9.07
	115	90.4	90.4	9.21	88.6	88.6	9.26	91.8	87.2	9.29	97.4	78.8	9.32	103.2	70.2	9.36	107.0	63.1	9.38	112.8	51.5	9.52
	118	89.4	89.4	9.47	87.4	87.4	9.51	90.6	86.5	9.55	96.0	78.1	9.58	101.8	69.6	9.62	105.5	62.6	9.64	111.3	50.9	9.79
	122																					

TC: Evaporator Total Capacity (1,000 BTU/h) Net TC = TC - Blower input

SC: Evaporator Sensible Capacity(1,000 BTU/h) Net SC = SC - Blower input

PI: Power input(kW) Compressor + outdoor fan System PI = PI + Blower input

Note: TC and SC represent the evaporator's heat load and do not account for the blower input. To calculate the net capacity, subtract the blower input from each value.

is shown as reference data

The blank areas indicate that operation at this compressor speed is not possible under those conditions.

ID DB		85																				
ID WB		57			61			64			67			70			72			75		
ID CFM	OD DB	TC	SC	PI	TC	SC	PI	TC	SC	PI	TC	SC	PI	TC	SC	PI	TC	SC	PI	TC	SC	PI
	23	109.9	109.9	4.10	112.7	104.9	4.09	112.5	102.0	3.95	117.1	97.2	3.79	124.1	88.8	3.63	128.6	81.5	3.53	135.5	72.9	3.37
	30	109.8	109.8	4.12	112.5	104.7	4.13	112.3	101.9	3.99	116.9	97.1	3.83	123.9	88.6	3.67	128.4	81.3	3.56	135.4	72.8	3.40
	40	109.6	109.6	4.16	112.3	104.5	4.19	112.1	101.7	4.04	116.7	96.9	3.88	123.6	88.5	3.72	128.2	81.2	3.61	135.1	72.7	3.44
	50	109.4	109.4	4.19	112.1	104.3	4.25	111.9	101.5	4.10	116.4	96.7	3.93	123.4	88.3	3.77	127.9	81.0	3.66	134.9	72.5	3.73
	54	109.3	109.3	4.21	112.0	104.2	4.18	111.8	101.4	4.13	116.3	96.6	4.10	123.3	88.2	4.08	127.8	80.9	4.07	134.8	72.5	4.08
	58	109.3	109.3	4.52	111.9	104.1	4.51	111.7	101.3	4.47	116.3	96.5	4.44	123.2	88.1	4.44	127.7	80.9	4.43	134.7	72.4	4.44
	62	109.0	109.0	4.85	111.6	104.0	4.85	111.3	101.2	4.81	115.9	96.4	4.79	122.8	88.0	4.78	127.3	80.8	4.78	133.7	71.9	4.80
	66	107.7	107.7	5.19	109.9	103.3	5.19	109.7	100.5	5.15	114.2	95.7	5.13	121.0	87.4	5.13	125.5	80.2	5.13	131.8	70.9	5.16
	70	106.4	106.4	5.53	108.3	102.5	5.53	108.1	99.7	5.49	112.5	95.0	5.47	119.2	86.8	5.47	123.6	79.6	5.47	129.9	70.2	5.51
	72	105.8	105.8	5.70	107.5	102.1	5.70	107.3	99.4	5.66	111.7	94.7	5.64	118.3	86.5	5.65	122.7	79.3	5.65	128.9	69.8	5.69
	75	104.8	104.8	5.95	106.3	101.6	5.96	106.1	98.8	5.92	110.4	94.2	5.90	117.0	86.0	5.91	121.3	78.9	5.91	127.5	69.2	5.96
2700	79	103.5	103.5	6.29	104.6	100.8	6.30	104.4	98.0	6.26	108.7	93.4	6.24	115.2	85.3	6.25	119.4	78.3	6.26	125.5	68.4	6.31
CFM	83	102.2	102.2	6.63	103.0	103.0	6.64	102.8	97.2	6.60	107.0	92.7	6.59	113.4	84.6	6.60	117.5	77.6	6.61	123.6	67.6	6.67
	87	100.9	100.9	6.96	101.4	101.4	6.98	101.2	96.4	6.94	105.3	91.9	6.93	111.6	83.9	6.94	115.7	77.0	6.95	121.7	66.8	7.03
	91	99.6	99.6	7.30	99.7	99.7	7.32	99.5	95.6	7.29	103.6	91.1	7.27	109.8	83.2	7.29	113.8	76.3	7.30	119.8	65.9	7.39
	93	98.9	98.9	7.47	98.9	98.9	7.49	98.7	95.2	7.46	102.8	90.7	7.44	108.9	82.8	7.46	112.9	76.0	7.47	118.8	65.5	7.56
	95	98.3	98.3	7.64	98.1	98.1	7.66	97.9	94.7	7.63	101.9	90.3	7.62	108.0	82.4	7.64	112.0	75.6	7.65	117.8	65.1	7.74
	99	97.0	97.0	7.98	96.5	96.5	8.01	96.3	96.3	7.97	100.2	89.4	7.96	106.2	81.6	7.98	110.1	74.9	8.00	115.9	64.3	8.10
	103	95.7	95.7	8.31	94.8	94.8	8.35	94.7	94.7	8.31	98.5	88.5	8.30	104.4	80.9	8.33	108.2	74.2	8.34	114.0	63.4	8.46
	106	94.7	94.7	8.57	93.6	93.6	8.60	93.4	93.4	8.57	97.3	87.9	8.56	103.1	80.2	8.59	106.8	73.6	8.60	112.6	62.8	8.72
	110	93.4	93.4	8.90	92.0	92.0	8.94	91.8	91.8	8.91	95.6	87.0	8.90	101.3	79.4	8.93	105.0	72.9	8.95	110.6	62.0	9.08
	115	91.8	91.8	9.33	89.9	89.9	9.37	89.8	89.8	9.34	93.5	85.8	9.33	99.0	78.4	9.36	102.7	71.9	9.39	108.2	60.9	9.53
	118	90.8	90.8	9.58	88.7	88.7	9.63	88.6	88.6	9.59	92.2	85.1	9.59	97.7	77.7	9.62	101.3	71.3	9.65	106.8	60.2	9.79
	122																					
	23	112.5	112.5	4.10	115.3	110.6	4.09	115.1	107.6	3.95	119.8	102.5	3.79	127.0	93.6	3.63	131.6	85.9	3.53	138.7	76.9	3.37
	30	112.4	112.4	4.12	115.1	110.4	4.13	114.9	107.4	3.99	119.6	102.4	3.83	126.8	93.5	3.66	131.4	85.8	3.56	138.5	76.8	3.40
	40	112.2	112.2	4.16	114.9	110.2	4.19	114.7	107.2	4.04	119.4	102.2	3.88	126.5	93.3	3.71	131.2	85.6	3.61	138.3	76.6	3.44
	50	112.0	112.0	4.19	114.7	110.0	4.24	114.5	107.0	4.09	119.2	102.0	3.93	126.3	93.1	3.76	130.9	85.4	3.66	138.0	76.5	3.73
	54	111.9	111.9	4.20	114.6	109.9	4.18	114.4	106.9	4.13	119.1	101.9	4.10	126.2	93.0	4.08	130.8	85.4	4.07	137.9	76.4	4.08
	58	111.8	111.8	4.51	114.5	109.8	4.50	114.3	106.8	4.47	119.0	101.8	4.44	126.1	93.0	4.43	130.7	85.3	4.43	137.8	76.4	4.44
	62	111.6	111.6	4.85	114.2	109.7	4.85	114.0	106.7	4.81	118.6	101.7	4.78	125.7	92.8	4.78	130.3	85.2	4.78	136.8	75.8	4.80
	66	110.3	110.3	5.19	112.5	108.9	5.19	112.3	105.9	5.15	116.9	101.0	5.13	123.9	92.2	5.13	128.4	84.6	5.13	134.9	74.8	5.15
	70	108.9	108.9	5.53	110.8	108.1	5.53	110.6	105.2	5.49	115.2	100.2	5.47	122.0	91.5	5.47	126.5	84.0	5.47	132.9	74.0	5.51
	72	108.2	108.2	5.70	110.0	107.7	5.70	109.8	104.8	5.66	114.3	99.9	5.64	121.1	91.2	5.64	125.5	83.7	5.65	131.9	73.6	5.69
	75	107.2	107.2	5.95	108.7	107.1	5.96	108.5	104.2	5.92	113.0	99.3	5.90	119.7	90.7	5.90	124.1	83.2	5.91	130.4	73.0	5.96
3100	79	105.9	105.9	6.29	107.1	106.3	6.30	106.9	103.4	6.26	111.3	98.5	6.24	117.9	90.0	6.25	122.2	82.6	6.26	128.5	72.1	6.31
CFM	83	104.6	104.6	6.62	105.4	105.4	6.64	105.2	102.6	6.60	109.5	97.7	6.58	116.1	89.2	6.60	120.3	81.9	6.60	126.5	71.3	6.67
	87	103.2	103.2	6.96	103.7	103.7	6.98	103.5	101.7	6.94	107.8	96.9	6.93	114.2	88.5	6.94	118.4	81.2	6.95	124.5	70.4	7.03
	91	101.9	101.9	7.30	102.1	102.1	7.32	101.9	100.8	7.28	106.1	96.1	7.27	112.4	87.7	7.29	116.5	80.5	7.30	122.6	69.6	7.38
	93	101.2	101.2	7.47	101.2	101.2	7.49	101.0	100.4	7.45	105.2	95.6	7.44	111.5	87.3	7.46	115.5	80.1	7.47	121.6	69.1	7.56
	95	100.6	100.6	7.64	100.4	100.4	7.66	100.2	99.9	7.62	104.3	95.2	7.61	110.5	86.9	7.63	114.6	79.8	7.65	120.6	68.7	7.74
	99	99.2	99.2	7.97	98.7	98.7	8.00	98.5	98.5	7.97	102.6	94.3	7.96	108.7	86.1	7.98	112.7	79.0	7.99	118.6	67.8	8.10
	103	97.9	97.9	8.31	97.1	97.1	8.34	96.9	96.9	8.31	100.8	93.4	8.30	106.9	85.3	8.32	110.8	78.2	8.34	116.7	66.9	8.45
	106	96.9	96.9	8.56	95.8	95.8	8.60	95.6	95.6	8.56	99.5	92.7	8.56	105.5	84.6	8.58	109.3	77.7	8.60	115.2	66.2	8.72
	110	95.6	95.6	8.90	94.1	94.1	8.94	94.0	94.0	8.90	97.8	91.7	8.90	103.6	83.8	8.93	107.4	76.9	8.95	113.2	65.3	9.08
	115	93.9	93.9	9.32	92.1	92.1	9.37	91.9	91.9	9.33	95.6	90.5	9.33	101.3	82.6	9.36	105.1	75.8	9.38	110.8	64.2	9.52
	118	92.9	92.9	9.58	90.8	90.8	9.62	90.6	90.6	9.59	94.3	89.7	9.59	100.0	81.9	9.62	103.6	75.2	9.64	109.3	63.5	9.79
	122																					
	23	114.5	114.5	4.10	117.4	115.1	4.09	117.2	112.0	3.95	122.0	106.7	3.79	129.2	97.4	3.63	134.0	89.4	3.53	141.2	80.0	3.37
	30	114.4	114.4	4.12	117.2	114.9	4.13	117.0	111.8	3.98	121.8	106.6	3.82	129.1	97.3	3.66	133.8	89.3	3.56	141.0	79.9	3.40
	40	114.2	114.2	4.15	117.0	114.7	4.19	116.8	111.6	4.04	121.6	106.3	3.88	128.8	97.1	3.71	133.5	89.1	3.61	140.8	79.8	3.44
	50	114.0	114.0	4.19	116.8	114.5	4.24	116.5	111.4	4.09	121.3	106.1	3.93	128.5	96.9	3.76	133.3	88.9	3.66	140.5	79.6	3.73
	54	113.9	113.9	4.20	116.7	114.4	4.18	116.4	111.3	4.13	121.2	106.0	4.10	128.4	96.8	4.08	133.1	88.9	4.07	140.4	79.6	4.08
	58	113.8	113.8	4.51	116.6	114.3	4.50	116.3	111.2	4.46	121.1	106.0	4.44	128.3	96.8	4.43	133.0	88.8	4.43	140.3	79.5	4.44
	62	113.6	113.6	4.85	116.2	114.1	4.84	116.0	111.0	4.80	120.8	105.8	4.78	128.0	96.6	4.78	132.6	88.7	4.78	139.3	78.9	4.79
	66	112.2	112.2	5.19	114.5	113.4	5.19	114.3	110.3	5.15	119.0	105.1	5.13	126.1	96.0	5.12	130.7	88.1	5.12	137.3	77.9	5.15
	70	110.9	110.9	5.52	112.8	112.5	5.53	112.6	109.5	5.49	117.2	104.3	5.47	124.2	95.3	5.47	128.8	87.4	5.47	135.3	77.0	5.51
	72	110.2	110.2	5.69	112.0	112.1	5.70	111.8	109.1	5.66	116.3	103.9	5.64	123.3	94.9	5.64	127.8	87.1	5.64	134.3	76.6	5.69
	75	109.2	109.2	5.95	110.7	111.5	5.95	110.5	108.5	5.91	115.0	103.4	5.90	121.9	94.4	5.90	126.3	86.6	5.91	132.8	75.9	5.95
3500	79	107.8	107.8	6.28	109.0	110.6	6.29	108.8	107.6	6.26	113.3	102.6	6.24	120.0	93.6	6.25	124.4	85.9	6.25	130.8	75.1	6.31
CFM	83	106.5	106.5	6.62	107.3	107.3	6.63	107.1	106.7	6.60	111.5	101.7	6.58	118.1	92.9	6.59	122.5	85.2	6.60	128.8	74.2	6.67
	87	105.1	105.1	6.96	105.6	105.6	6.98	105.4	105.8	6.94	109.7	100.9	6.93	116.3	92.1	6.94	120.5	84.5	6.95	126.8	73.3	7.02
	91	103.7	103.7	7.30	103.9	103.9	7.32	103.7	104.9	7.28	108.0	100.0	7.27	114.4	91.3	7.28	118.6	83.8	7.29	124.8	72.4	7.38
	93	103.1	103.1	7.46	103.1	103.1	7.49	102.9	104.5	7.45	107.1	99.5	7.44	113.5	90.9	7.46	117.6	83.4	7.47	123.8	71.9	7.56
	95	102.4	102.4	7.63	102.2	102.2	7.66	102.0	104.0	7.62	106.2	99.1	7.61	112.5	90.5	7.63	116.6	83.0	7.64	122.8	71.5	7.74
	99	101.0	101.0	7.97	100.5	100.5	8.00	100.3	100.3	7.96	104.4	98.2	7.95	110.7	89.6	7.98	114.7	82.2	7.99	120.8	70.6	8.09
	103	99.7	99.7	8.31	98.8	98.8	8.34	98.6	98.6	8.30	102.7	97.2	8.30	108.8	88.8	8.32	112.8	81.4	8.34	118.8	69.6	8.45
	106	98.7	98.7	8.56	97.5	97.5	8.60	97.4	97.4	8.56	101.3	96.5	8.55	107.4	88.1	8.58	111.3	80.8	8.60	117.3	68.9	8.72
	110	97.3	97.3	8.90	95.8	95.8	8.94	95.7	95.7	8.90	99.6	95.5	8.90	105.5	87.2	8.93	109.4	80.0	8.95	115.3	68.0	9.07
	115	95.6	95.6	9.32	93.7	93.7	9.36	93.5	93.5	9.33	97.4	94.2	9.32	103.2	86.0	9.36	107.0	78.9	9.38	112.8	66.8	9.52
	118	94.6	94.6	9.57	92.4	92.4	9.62	92.3	92.3	9.58	96.0	93.4	9.58	101.8	85.3	9.62	105.5	78.3	9.64	111.3	66.1	9.79
	122																					

TC: Evaporator Total Capacity (1,000 BTU/h) Net TC = TC - Blower input

SC: Evaporator Sensible Capacity(1,000 BTU/h) Net SC = SC - Blower input

PI: Power input(kW) Compressor + outdoor fan System PI = PI + Blower input

Note: TC and SC represent the evaporator's heat load and do not account for the blower input. To calculate the net capacity, subtract the blower input from each value.

is shown as reference data

The blank areas indicate that operation at this compressor speed is not possible under those conditions.

ID DB		70												75																	
ID WB		57			61			64			67			57			61			64			67			70			72		
ID CFM	OD DB	TC	SC	PI	TC	SC	PI	TC	SC	PI	TC	SC	PI	TC	SC	PI	TC	SC	PI	TC	SC	PI	TC	SC	PI	TC	SC	PI	TC	SC	PI
	23	99.4	84.9	4.47	110.5	71.3	4.55	116.5	61.0	4.40	122.7	50.7	4.28	101.9	101.9	4.49	110.5	87.6	4.55	116.5	77.5	4.40	122.7	67.5	4.28	129.9	58.1	4.11	134.4	50.6	4.01
	30	99.3	84.8	4.50	110.3	71.2	4.57	116.3	60.9	4.42	122.5	50.6	4.30	101.7	101.7	4.52	110.3	87.5	4.57	116.3	77.4	4.42	122.5	67.4	4.30	129.7	58.1	4.12	134.2	50.5	4.03
	40	99.2	84.7	4.54	110.1	71.0	4.60	116.0	60.8	4.45	122.2	50.5	4.33	101.6	101.6	4.56	110.1	87.3	4.60	116.0	77.2	4.45	122.2	67.2	4.33	129.4	57.9	4.15	133.9	50.4	4.05
	50	99.0	84.6	4.58	109.8	70.9	4.54	115.8	60.6	4.44	121.9	50.4	4.35	101.4	101.4	4.60	109.8	87.1	4.54	115.8	77.0	4.44	121.9	67.1	4.35	129.2	57.8	4.32	133.6	50.3	4.30
	54	98.9	84.5	4.59	109.7	70.8	4.67	115.7	60.6	4.68	121.8	50.3	4.68	101.3	101.3	4.61	109.7	87.0	4.67	115.7	77.0	4.68	121.8	67.0	4.68	129.0	57.8	4.67	133.5	50.2	4.66
	58	98.9	84.5	4.74	109.6	70.8	4.91	115.6	60.5	4.98	121.7	50.3	5.04	101.3	101.3	4.77	109.6	87.0	4.91	115.6	76.9	4.98	121.7	66.9	5.04	128.9	57.7	5.03	133.4	50.2	5.03
	62	98.3	84.0	5.11	108.9	70.5	5.28	114.8	60.3	5.34	121.0	50.1	5.40	100.7	100.7	5.13	108.9	86.6	5.28	114.8	76.6	5.34	121.0	66.7	5.40	128.1	57.5	5.40	132.5	50.0	5.40
	66	97.2	83.3	5.47	107.4	70.0	5.65	113.2	59.9	5.71	119.3	49.8	5.76	99.5	99.5	5.50	107.4	86.0	5.65	113.2	76.1	5.71	119.3	66.2	5.76	126.3	57.1	5.77	130.7	49.7	5.78
	70	96.0	82.6	5.84	105.9	69.5	6.01	111.6	59.4	6.07	117.5	49.4	6.13	98.4	98.4	5.86	105.9	85.4	6.01	111.6	75.5	6.07	117.5	65.7	6.13	124.5	56.7	6.14	128.8	49.3	6.15
	72	95.5	82.2	6.02	105.1	69.2	6.20	110.8	59.2	6.25	116.7	49.2	6.31	97.8	97.8	6.05	105.1	85.1	6.20	110.8	75.2	6.25	116.7	65.5	6.31	123.6	56.5	6.33	127.9	49.1	6.34
	75	94.6	81.7	6.29	104.0	68.8	6.47	109.6	58.9	6.53	115.4	48.9	6.58	96.9	96.9	6.32	104.0	84.6	6.47	109.6	74.8	6.53	115.4	65.1	6.58	122.3	56.1	6.60	126.5	48.8	6.62
2700	79	93.5	80.9	6.65	102.4	68.3	6.84	108.0	58.4	6.89	113.7	48.6	6.94	95.8	95.8	6.69	102.4	84.0	6.84	108.0	74.2	6.89	113.7	64.6	6.94	120.4	55.7	6.97	124.6	48.5	6.99
CFM	83	92.4	80.2	7.02	100.9	67.8	7.21	106.3	58.0	7.26	112.0	48.2	7.30	94.6	94.6	7.05	100.9	83.3	7.21	106.3	73.6	7.26	112.0	64.1	7.30	118.6	55.3	7.34	122.7	48.1	7.36
	87	91.2	79.4	7.38	99.3	67.2	7.57	104.7	57.5	7.62	110.3	47.8	7.67	93.5	93.5	7.42	99.3	82.6	7.57	104.7	73.0	7.62	110.3	63.6	7.67	116.8	54.8	7.71	120.9	47.7	7.74
	91	90.1	78.7	7.75	97.8	66.6	7.94	103.1	57.0	7.98	108.6	47.4	8.03	92.3	92.3	7.78	97.8	81.9	7.94	103.1	72.4	7.98	108.6	63.0	8.03	115.0	54.3	8.08	119.0	47.3	8.11
	93	89.6	78.3	7.93	97.0	66.3	8.12	102.3	56.7	8.17	107.7	47.1	8.21	91.7	91.7	7.97	97.0	81.5	8.12	102.3	72.1	8.17	107.7	62.7	8.21	114.1	54.1	8.26	118.1	47.1	8.30
	95	89.0	77.9	8.11	96.3	65.9	8.31	101.5	56.5	8.35	106.9	46.9	8.39	91.2	91.2	8.15	96.3	81.0	8.31	101.5	71.7	8.35	106.9	62.5	8.39	113.2	53.8	8.45	117.1	46.8	8.48
	99	87.9	77.1	8.47	94.7	65.0	8.67	99.9	56.0	8.71	105.2	46.5	8.75	90.0	90.0	8.51	94.7	79.9	8.67	99.9	71.1	8.71	105.2	61.9	8.75	111.4	53.3	8.82	115.3	46.4	8.86
	103	86.7	76.4	8.84	93.2	64.1	9.04	98.3	55.4	9.08	103.5	46.1	9.12	88.8	88.8	8.88	93.2	78.8	9.04	98.3	70.4	9.08	103.5	61.3	9.12	109.6	52.8	9.19	113.4	46.0	9.23
	106	85.9	75.8	9.11	92.1	63.5	9.32	97.0	55.0	9.35	102.2	45.7	9.39	88.0	88.0	9.15	92.1	78.0	9.32	97.0	69.9	9.35	102.2	60.9	9.39	108.3	52.5	9.46	112.0	45.6	9.51
	110	84.8	75.0	9.47	90.5	62.6	9.68	95.4	54.5	9.72	100.5	45.3	9.75	86.8	86.8	9.52	90.5	76.9	9.68	95.4	69.2	9.72	100.5	60.2	9.75	106.4	51.9	9.83	110.1	45.2	9.88
	115	83.3	74.0	9.93	88.6	61.5	10.14	93.4	53.8	10.17	98.4	44.7	10.20	85.4	85.4	9.98	88.6	75.6	10.14	93.4	68.3	10.17	98.4	59.5	10.20	104.2	51.2	10.29	107.8	44.6	10.35
	118																														
	122																														
	23	101.9	89.5	4.47	113.2	75.1	4.55	119.3	64.3	4.40	125.7	53.4	4.28	104.3	104.3	4.49	113.2	92.3	4.55	119.3	81.6	4.40	125.7	71.1	4.28	133.1	61.3	4.11	137.7	53.3	4.01
	30	101.7	89.4	4.50	113.0	75.0	4.57	119.1	64.2	4.43	125.5	53.3	4.30	104.2	104.2	4.52	113.0	92.2	4.57	119.1	81.5	4.43	125.5	71.0	4.30	132.9	61.2	4.13	137.5	53.2	4.03
	40	101.6	89.2	4.54	112.8	74.8	4.61	118.9	64.0	4.45	125.2	53.2	4.33	104.1	104.1	4.56	112.8	92.0	4.61	118.9	81.3	4.45	125.2	70.8	4.33	132.6	61.0	4.15	137.2	53.1	4.05
	50	101.4	89.1	4.58	112.5	74.7	4.54	118.6	63.9	4.45	124.9	53.1	4.36	103.9	103.9	4.60	112.5	91.8	4.54	118.6	81.1	4.45	124.9	70.7	4.36	132.3	60.9	4.32	136.9	53.0	4.30
	54	101.4	89.0	4.59	112.4	74.6	4.68	118.5	63.8	4.68	124.8	53.0	4.68	103.8	103.8	4.62	112.4	91.7	4.68	118.5	81.1	4.68	124.8	70.6	4.68	132.2	60.8	4.67	136.8	52.9	4.66
	58	101.3	89.0	4.75	112.3	74.6	4.92	118.4	63.8	4.98	124.7	53.0	5.04	103.8	103.8	4.77	112.3	91.6	4.92	118.4	81.0	4.98	124.7	70.5	5.04	132.1	60.8	5.04	136.6	52.9	5.03
	62	100.7	88.5	5.11	111.6	74.3	5.28	117.7	63.5	5.34	123.9	52.8	5.40	103.2	103.2	5.14	111.6	91.3	5.28	117.7	80.7	5.34	123.9	70.3	5.40	131.3	60.6	5.41	135.8	52.7	5.41
	66	99.5	87.8	5.47	110.0	73.7	5.65	116.0	63.1	5.71	122.2	52.4	5.77	102.0	102.0	5.50	110.0	90.6	5.65	116.0	80.1	5.71	122.2	69.8	5.77	129.4	60.1	5.77	133.9	52.3	5.78
	70	98.4	87.0	5.84	108.5	73.2	6.02	114.3	62.6	6.07	120.4	52.0	6.13	100.8	100.8	5.87	108.5	90.0	6.02	114.3	79.6	6.07	120.4	69.3	6.13	127.6	59.7	6.14	132.0	51.9	6.15
	72	97.8	86.6	6.02	107.7	72.9	6.20	113.5	62.4	6.26	119.5	51.9	6.31	100.2	100.2	6.05	107.7	89.6	6.20	113.5	79.3	6.26	119.5	69.0	6.31	126.6	59.5	6.33	131.0	51.8	6.34
	75	96.9	86.0	6.29	106.5	72.5	6.48	112.3	62.0	6.53	118.2	51.6	6.58	99.3	99.3	6.32	106.5	89.1	6.48	112.3	78.8	6.53	118.2	68.6	6.58	125.2	59.1	6.61	129.6	51.5	6.62
3100	79	95.8	85.2	6.66	104.9	72.0	6.84	110.6	61.6	6.89	116.5	51.2	6.95	98.1	98.1	6.69	104.9	88.4	6.84	110.6	78.2	6.89	116.5	68.1	6.95	123.4	58.7	6.97	127.6	51.1	6.99
CFM	83	94.6	84.5	7.02	103.3	71.4	7.21	108.9	61.1	7.26	114.7	50.7	7.31	96.9	96.9	7.06	103.3	87.7	7.21	108.9	77.6	7.26	114.7	67.5	7.31	121.5	58.2	7.34	125.7	50.6	7.37
	87	93.5	83.7	7.38	101.8	70.8	7.58	107.3	60.6	7.62	113.0	50.3	7.67	95.7	95.7	7.42	101.8	87.0	7.58	107.3	76.9	7.62	113.0	67.0	7.67	119.7	57.7	7.71	123.8	50.2	7.74
	91	92.3	82.9	7.75	100.2	70.2	7.94	105.6	60.0	7.99	111.3	49.9	8.03	94.6	94.6	7.79	100.2	86.3	7.94	105.6	76.3	7.99	111.3	66.4	8.03	117.8	57.2	8.08	121.9	49.8	8.11
	93	91.7	82.5	7.93	99.4	69.9	8.13	104.8	59.8	8.17	110.4	49.7	8.21	94.0	94.0	7.97	99.4	85.9	8.13	104.8	75.9	8.17	110.4	66.1	8.21	116.9	57.0	8.27	121.0	49.6	8.30
	95	91.2	82.1	8.11	98.6	69.4	8.31	104.0	59.5	8.35	109.5	49.4	8.40	93.4	93.4	8.15	98.6	85.3	8.31	104.0	75.6	8.35	109.5	65.8	8.40	116.0	56.7	8.45	120.0	49.4	8.49
	99	90.0	81.3	8.48	97.1	68.5	8.68	102.3	59.0	8.72	107.8	49.0	8.76	92.2	92.2	8.52	97.1	84.2	8.68	102.3	74.9	8.72	107.8	65.2	8.76	114.1	56.2	8.82	118.1	48.9	8.86
	103	88.9	80.4	8.84	95.5	67.6	9.05	100.7	58.4	9.08	106.0	48.5	9.12	91.0	91.0	8.88	95.5	83.1	9.05	100.7	74.2	9.08	106.0	64.6	9.12	112.3	55.7	9.19	116.2	48.4	9.24
	106	88.0	79.8	9.11	94.3	66.9	9.32	99.4	58.0	9.36	104.7	48.2	9.39	90.1	90.1	9.16	94.3	82.2	9.32	99.4	73.6	9.36	104.7	64.1	9.39	110.9	55.3	9.47	114.7	48.1	9.52
	110	86.8	79.0	9.48	92.7	66.0	9.69	97.7	57.4	9.72	103.0	47.7	9.75	88.9	88.9	9.52	92.7	81.1	9.69	97.7	72.9	9.72	103.0	63.5	9.75	109.0	54.7	9.84	112.8	47.6	9.89
	115	85.4	78.0	9.93	90.8	64.8	10.15	95.7	56.6	10.18	100.8	47.1	10.21	87.5	87.5	9.98	90.8	79.6	10.15	95.7	71.9	10.18	100.8	62.6	10.21	106.7	54.0	10.30	110.4	47.0	10.36
	118																														
	122																														
	23	103.8	93.0	4.47	115.3	78.1	4.55	121.6	66.8	4.41	128.0	55.5	4.28	106.3	106.3	4.49	115.3	96.0	4.55	121.6	84.8	4.41	128.0	73.9	4.28	135.6	63.7	4.11	140.3	55.4	4.01
	30	103.7	92.9	4.50	115.1	78.0	4.58	121.4	66.7	4.43	127.8	55.4	4.30	106.2	106.2	4.52	115.1	95.8	4.58	121.4	84.7	4.43	127.8	73.8	4.30	135.4	63.6	4.13	140.1	55.3	4.03
	40	103.5	92.7	4.54	114.9	77.8	4.61	121.1	66.5	4.46	127.6	55.3	4.33	106.0	106.0	4.56	114.9	95.6	4.61	121.1	84.5	4.46	127.6	73.6	4.33	135.1	63.4	4.16	139.8	55.2	4.05
	50	103.3	92.6	4.58	114.6	77.6	4.54	120.8	66.4	4.45	127.3	55.2	4.36	105.8	105.8	4.60	114.6	95.4	4.54	120.8	84.3	4.45	127.3	73.4	4.36	134.8	63.3	4.32	139.5	55.1	4.30
	54	103.3	92.5	4.59	114.5	77.6	4.68	120.7	66.3	4.68	127.2	55.1	4.68	105.8	105.8	4.62	114.5	95.3	4.68	120.7	84.3	4.68	127.2	73.4	4.68	134.7	63.2	4.67	139.4	55.0	4.66
	58	103.2	92.5	4.75	114.4	77.5	4.92	120.6	66.3	4.98	127.1	55.1	5.04	105.7	105.7	4.77	114.4	95.2	4.92	120.6	84.2	4.98	127.1	73.3	5.04	134.6	63.2	5.04	139.2	55.0	5.03
	62	102.6	92.0	5.11	113.7	77.2	5.28	119.9	66.0	5.34	126.3	54.9	5.41	105.1	105.1	5.14	113.7	94.9	5.28	119.9	83.9	5.34	126.3	73.0	5.41	133.7	62.9	5.41	138.4	54.8	5.41
	66	101.4	91.2	5.48	112.1	76.6	5.65	118.2	65.6	5.71	124.5	54.5	5.77	103.9	103.9	5.50	112.1	94.2	5.65	118.2	83.3	5.71	124.5	72.5	5.77	131.8	62.5	5.78	136.4	54.4	5.78
	70	100.3	90.4	5.84	110.5	76.1	6.02	116.5	65.1	6.07	122.7	54.1	6.13	102.7	102.7	5.87	110.5	93.5	6.02	116.5	82.7	6.07	122.7	72.0	6.13	130.0	62.1	6.14	134.5	54.0	6.15
	72	99.7	90.0	6.02	109.7	75.8	6.20	115.7	64.8	6.26	121.8	53.9	6.31	102.1	102.1	6.05	109.7	93.2	6.20	115.7	82.4	6.26	121.8	71.7	6.31	129.0	61.8	6.33	133.5	53.8	6.34
	75	98.8	89.4	6.29	108.5	75.4	6.48	114.4	64.5	6.53	120.5	53.6	6.58	101.2	101.2	6.33	108.5	92.6	6.48	114.4	81.9	6.53	120.5	71.3	6.58	127.6	61.5	6.61	132.0	53.5	6.62
3500	79	97.6	88.6	6.66	106.9	74.8	6.84	112.7	64.0	6.90	118.7	53.2	6.95	100.0	100.0	6.69	106.9	91.9	6.84	112.7	81.3	6.90	118.7	70.8	6.95	125.7	61.0	6.98	130.1	53.1	7.00
CFM	83	96.4	87.8	7.02	105.3	74.2	7.21	111.0	63.5	7.26	116.9	52.7	7.31	98.8	98.8	7.06	105.3	91.2	7.21	111.0	80.6	7.26	116.9	70.2	7.31	123.8	60.5	7.34	128.1	52.6	7.37
	87	95.2	87.0	7.39	103.7	73.6	7.58	109.3	62.9	7.63	115.1	52.3	7.67	97.6	97.6	7.42	103.7	90.4	7.58	109.3	79.9	7.63	115.1	69.6	7.67	122.0	60.0	7.71	126.2	52.2	7.74
	91	94.1	86.1	7.75	102.1	73.0	7.95	107.6	62.4	7.99	113.4	51.9	8.03	96.4	96.4	7.79	102.1	89.7	7.95	107.6	79.3	7.99	113.4	69.0	8.03	120.1	59.5	8.08	124.2	51.8	8.12
	93	93.5	85.7	7.93	101.3	72.6	8.13	106.8	62.1	8.17	112.5	51.6	8.22	95.7	95.7	7.97	101.3	89.3	8.13	106.8	78.9	8.17	112.5	68.7	8.22	119.1	59.2	8.27	123.2	51.5	8.30
	95	92.9	85.3	8.11	100.5	72.1	8.31	105.9	61.8	8.35	111.6	51.4	8.40	95.1	95.1	8.15	100.5	88.7	8.31	105.9	78.6	8.35	111.6	68.4	8.40	118.2	59.0	8.45	122.3	51.3	8.49
	99	91.7	84.5	8.48	98.9	71.2	8.68	104.2	61.3	8.72	109.8	50.9	8.76	93.9	93.9	8.52	98.9	87.5	8.68	104.2	77.8	8.72	109.8	67.8	8.76	116.3	58.4	8.82	120.3	50.8	8.86
	103	90.5	83.6	8.84	97.3	70.2	9.05	102.6	60.7	9.08	108.0	50.4	9.12	92.7	92.7	8.89	97.3	86.3	9.05	102.6	77.1	9.08	108.0	67.1	9.12	114.4	57.9	9.19	118.4	50.3	9.24
	106	89.6	83.0	9.12	96.1	69.5	9.32	101.3	60.2	9.36	106.7	50.1	9.39	91.8	91.8	9.16	96.1	85.4	9.32	101.3	76.5	9.36	106.7	66.6	9.39	113.0	57.4	9.47	116.9	50.0	9.52
	110	88.5	82.1	9.48	94.5	68.6	9.69	99.6	59.6	9.72	104.9	49.6	9.76	90.6	90.6	9.53	94.5	84.2	9.69	99.6	75.8	9.72	104.9	66.0	9.76	111.1	56.9	9.84	114.9	49.5	9.89
	115	87.0	81.0	9.93	92.5	67.3	10.15	97.5	58.9	10.18	102.7	48.9	10.21	89.1	89.1	9.98	92.5	82.8	10.15	97.5	74.8	10.18	102.7	65.1	10.21	108.8	56.1	10.30	112.5	48.8	10.36
	118																														
	122																														

TC: Evaporator Total Capacity (1,000 BTU/h) Net TC = TC - Blower input

SC: Evaporator Sensible Capacity(1,000 BTU/h) Net SC = SC - Blower input

PI: Power input(kW) Compressor + outdoor fan System PI = PI + Blower input

Note: TC and SC represent the evaporator's heat load and do not account for the blower input. To calculate the net capacity, subtract the blower input from each value.

is shown as reference data

The blank areas indicate that operation at this compressor speed is not possible under those conditions.

ID DB		80																				
ID WB		57			61			64			67			70			72			75		
ID CFM	OD DB	TC	SC	PI	TC	SC	PI	TC	SC	PI	TC	SC	PI	TC	SC	PI	TC	SC	PI	TC	SC	PI
2700 CFM	23	107.8	107.8	4.55	110.5	101.3	4.55	116.5	93.6	4.40	122.7	83.7	4.28	129.9	74.9	4.11	134.4	67.4	4.01	142.0	58.5	3.82
	30	107.7	107.7	4.58	110.3	101.2	4.57	116.3	93.4	4.42	122.5	83.6	4.30	129.7	74.8	4.12	134.2	67.3	4.03	141.8	58.5	3.86
	40	107.5	107.5	4.62	110.1	100.9	4.60	116.0	93.2	4.45	122.2	83.4	4.33	129.4	74.7	4.15	133.9	67.1	4.05	141.6	58.4	3.91
	50	107.4	107.4	4.66	109.8	100.7	4.54	115.8	93.0	4.44	121.9	83.2	4.35	129.2	74.5	4.32	133.6	67.0	4.30	141.3	58.3	4.26
	54	107.3	107.3	4.67	109.7	100.6	4.67	115.7	93.0	4.68	121.8	83.1	4.68	129.0	74.4	4.67	133.5	66.9	4.66	141.2	58.2	4.64
	58	107.2	107.2	4.83	109.6	100.5	4.91	115.6	92.9	4.98	121.7	83.1	5.04	128.9	74.4	5.03	133.4	66.8	5.03	141.1	58.2	5.02
	62	106.6	106.6	5.20	108.9	100.2	5.28	114.8	92.5	5.34	121.0	82.7	5.40	128.1	74.1	5.40	132.5	66.6	5.40	139.6	57.6	5.40
	66	105.4	105.4	5.57	107.4	99.5	5.65	113.2	91.9	5.71	119.3	82.2	5.76	126.3	73.6	5.77	130.7	66.1	5.78	137.7	56.9	5.78
	70	104.2	104.2	5.94	105.9	98.7	6.01	111.6	91.2	6.07	117.5	81.6	6.13	124.5	73.0	6.14	128.8	65.6	6.15	135.7	56.3	6.16
	72	103.6	103.6	6.12	105.1	98.4	6.20	110.8	90.9	6.25	116.7	81.3	6.31	123.6	72.8	6.33	127.9	65.4	6.34	134.8	56.0	6.35
	75	102.6	102.6	6.40	104.0	97.8	6.47	109.6	90.4	6.53	115.4	80.8	6.58	122.3	72.4	6.60	126.5	65.0	6.62	133.3	55.5	6.64
	79	101.4	101.4	6.77	102.4	97.1	6.84	108.0	89.7	6.89	113.7	80.2	6.94	120.4	71.8	6.97	124.6	64.5	6.99	131.4	54.9	7.02
	83	100.2	100.2	7.14	100.9	96.3	7.21	106.3	88.9	7.26	112.0	79.5	7.30	118.6	71.2	7.34	122.7	64.0	7.36	129.5	54.2	7.40
	87	99.0	99.0	7.51	99.3	95.5	7.57	104.7	88.2	7.62	110.3	78.9	7.67	116.8	70.6	7.71	120.9	63.5	7.74	127.5	53.6	7.78
	91	97.7	97.7	7.88	97.8	94.7	7.94	103.1	87.4	7.98	108.6	78.2	8.03	115.0	70.0	8.08	119.0	62.9	8.11	125.6	52.9	8.16
	93	97.1	97.1	8.07	97.0	94.2	8.12	102.3	87.1	8.17	107.7	77.9	8.21	114.1	69.7	8.26	118.1	62.7	8.30	124.6	52.6	8.35
	95	96.5	96.5	8.25	96.3	96.3	8.31	101.5	86.7	8.35	106.9	77.5	8.39	113.2	69.4	8.45	117.1	62.4	8.48	123.7	52.2	8.54
	99	95.3	95.3	8.62	94.7	94.7	8.67	99.9	85.9	8.71	105.2	76.8	8.75	111.4	68.8	8.82	115.3	61.8	8.86	121.7	51.6	8.92
	103	94.1	94.1	8.99	93.2	93.2	9.04	98.3	85.1	9.08	103.5	76.1	9.12	109.6	68.1	9.19	113.4	61.2	9.23	119.8	50.9	9.30
	106	93.1	93.1	9.27	92.1	92.1	9.32	97.0	84.4	9.35	102.2	75.5	9.39	108.3	67.6	9.46	112.0	60.8	9.51	118.3	50.4	9.59
	110	91.9	91.9	9.64	90.5	90.5	9.68	95.4	83.6	9.72	100.5	74.7	9.75	106.4	66.9	9.83	110.1	60.2	9.88	116.4	49.7	9.97
	115	90.4	90.4	10.10	88.6	88.6	10.14	93.4	82.5	10.17	98.4	73.8	10.20	104.2	66.0	10.29	107.8	59.4	10.35	114.0	48.8	10.44
	118																					
	122																					
3100 CFM	23	110.5	110.5	4.55	113.2	106.7	4.55	119.3	98.6	4.40	125.7	88.2	4.28	133.1	78.9	4.11	137.7	71.0	4.01	145.5	61.7	3.83
	30	110.4	110.4	4.58	113.0	106.6	4.57	119.1	98.5	4.43	125.5	88.1	4.30	132.9	78.8	4.13	137.5	70.9	4.03	145.3	61.6	3.86
	40	110.2	110.2	4.62	112.8	106.4	4.61	118.9	98.2	4.45	125.2	87.9	4.33	132.6	78.7	4.15	137.2	70.7	4.05	145.1	61.5	3.92
	50	110.0	110.0	4.66	112.5	106.1	4.54	118.6	98.0	4.45	124.9	87.7	4.36	132.3	78.5	4.32	136.9	70.5	4.30	144.8	61.4	4.27
	54	109.9	109.9	4.67	112.4	106.0	4.68	118.5	97.9	4.68	124.8	87.6	4.68	132.2	78.4	4.67	136.8	70.5	4.66	144.7	61.3	4.65
	58	109.9	109.9	4.83	112.3	105.9	4.92	118.4	97.9	4.98	124.7	87.5	5.04	132.1	78.3	5.04	136.6	70.4	5.03	144.6	61.3	5.03
	62	109.2	109.2	5.20	111.6	105.5	5.28	117.7	97.5	5.34	123.9	87.2	5.40	131.3	78.0	5.41	135.8	70.1	5.41	143.0	60.7	5.41
	66	108.0	108.0	5.57	110.0	104.8	5.65	116.0	96.8	5.71	122.2	86.6	5.77	129.4	77.5	5.77	133.9	69.7	5.78	141.0	60.0	5.79
	70	106.7	106.7	5.94	108.5	104.0	6.02	114.3	96.1	6.07	120.4	85.9	6.13	127.6	76.9	6.14	132.0	69.2	6.15	139.0	59.3	6.17
	72	106.1	106.1	6.13	107.7	103.7	6.20	113.5	95.7	6.26	119.5	85.6	6.31	126.6	76.7	6.33	131.0	68.9	6.34	138.1	59.0	6.36
	75	105.1	105.1	6.40	106.5	103.1	6.48	112.3	95.2	6.53	118.2	85.1	6.58	125.2	76.2	6.61	129.6	68.5	6.62	136.6	58.5	6.64
	79	103.9	103.9	6.77	104.9	102.3	6.84	110.6	94.5	6.89	116.5	84.5	6.95	123.4	75.6	6.97	127.6	68.0	6.99	134.6	57.8	7.02
	83	102.6	102.6	7.14	103.3	101.4	7.21	108.9	93.7	7.26	114.7	83.8	7.31	121.5	75.0	7.34	125.7	67.4	7.37	132.6	57.1	7.40
	87	101.4	101.4	7.52	101.8	100.6	7.58	107.3	92.9	7.62	113.0	83.1	7.67	119.7	74.4	7.71	123.8	66.9	7.74	130.6	56.4	7.78
	91	100.1	100.1	7.89	100.2	99.7	7.94	105.6	92.1	7.99	111.3	82.4	8.03	117.8	73.8	8.08	121.9	66.3	8.11	128.7	55.7	8.16
	93	99.5	99.5	8.07	99.4	99.3	8.13	104.8	91.7	8.17	110.4	82.0	8.21	116.9	73.4	8.27	121.0	66.0	8.30	127.7	55.4	8.35
	95	98.9	98.9	8.26	98.6	98.6	8.31	104.0	91.3	8.35	109.5	81.7	8.40	116.0	73.1	8.45	120.0	65.7	8.49	126.7	55.0	8.54
	99	97.6	97.6	8.63	97.1	97.1	8.68	102.3	90.5	8.72	107.8	80.9	8.76	114.1	72.4	8.82	118.1	65.1	8.86	124.7	54.3	8.92
	103	96.4	96.4	9.00	95.5	95.5	9.05	100.7	89.6	9.08	106.0	80.1	9.12	112.3	71.7	9.19	116.2	64.5	9.24	122.7	53.6	9.30
	106	95.4	95.4	9.27	94.3	94.3	9.32	99.4	89.0	9.36	104.7	79.6	9.39	110.9	71.2	9.47	114.7	64.0	9.52	121.2	53.1	9.59
	110	94.2	94.2	9.64	92.7	92.7	9.69	97.7	88.1	9.72	103.0	78.8	9.75	109.0	70.5	9.84	112.8	63.4	9.89	119.3	52.4	9.97
	115	92.6	92.6	10.11	90.8	90.8	10.15	95.7	86.9	10.18	100.8	77.7	10.21	106.7	69.6	10.30	110.4	62.5	10.36	116.8	51.5	10.45
	118																					
	122																					
3500 CFM	23	112.6	112.6	4.55	115.3	110.9	4.55	121.6	102.5	4.41	128.0	91.7	4.28	135.6	82.1	4.11	140.3	73.8	4.01	148.2	64.1	3.83
	30	112.4	112.4	4.58	115.1	110.8	4.58	121.4	102.3	4.43	127.8	91.5	4.30	135.4	81.9	4.13	140.1	73.6	4.03	148.1	64.0	3.86
	40	112.3	112.3	4.62	114.9	110.5	4.61	121.1	102.1	4.46	127.6	91.3	4.33	135.1	81.8	4.16	139.8	73.5	4.05	147.8	63.9	3.92
	50	112.1	112.1	4.66	114.6	110.3	4.54	120.8	101.9	4.45	127.3	91.1	4.36	134.8	81.6	4.32	139.5	73.3	4.30	147.5	63.8	4.27
	54	112.0	112.0	4.68	114.5	110.2	4.68	120.7	101.8	4.68	127.2	91.0	4.68	134.7	81.5	4.67	139.4	73.3	4.66	147.4	63.8	4.65
	58	111.9	111.9	4.83	114.4	110.1	4.92	120.6	101.7	4.98	127.1	91.0	5.04	134.6	81.4	5.04	139.2	73.2	5.03	147.3	63.7	5.03
	62	111.3	111.3	5.20	113.7	109.7	5.28	119.9	101.3	5.34	126.3	90.6	5.41	133.7	81.1	5.41	138.4	72.9	5.41	145.7	63.0	5.41
	66	110.0	110.0	5.57	112.1	108.9	5.65	118.2	100.6	5.71	124.5	90.0	5.77	131.8	80.5	5.78	136.4	72.4	5.78	143.7	62.4	5.79
	70	108.7	108.7	5.94	110.5	108.1	6.02	116.5	99.9	6.07	122.7	89.3	6.13	130.0	80.0	6.14	134.5	71.9	6.15	141.7	61.7	6.17
	72	108.1	108.1	6.13	109.7	107.7	6.20	115.7	99.5	6.26	121.8	89.0	6.31	129.0	79.7	6.33	133.5	71.6	6.34	140.7	61.3	6.36
	75	107.1	107.1	6.41	108.5	107.1	6.48	114.4	99.0	6.53	120.5	88.5	6.58	127.6	79.2	6.61	132.0	71.2	6.62	139.2	60.8	6.64
	79	105.9	105.9	6.78	106.9	106.3	6.84	112.7	98.2	6.90	118.7	87.8	6.95	125.7	78.6	6.98	130.1	70.7	7.00	137.1	60.1	7.02
	83	104.6	104.6	7.15	105.3	105.4	7.21	111.0	97.4	7.26	116.9	87.1	7.31	123.8	78.0	7.34	128.1	70.1	7.37	135.1	59.4	7.40
	87	103.3	103.3	7.52	103.7	104.6	7.58	109.3	96.6	7.63	115.1	86.4	7.67	122.0	77.3	7.71	126.2	69.5	7.74	133.1	58.6	7.79
	91	102.0	102.0	7.89	102.1	103.7	7.95	107.6	95.8	7.99	113.4	85.6	8.03	120.1	76.7	8.08	124.2	68.9	8.12	131.1	57.9	8.17
	93	101.4	101.4	8.07	101.3	103.2	8.13	106.8	95.3	8.17	112.5	85.3	8.22	119.1	76.3	8.27	123.2	68.6	8.30	130.1	57.6	8.36
	95	100.7	100.7	8.26	100.5	100.5	8.31	105.9	94.9	8.35	111.6	84.9	8.40	118.2	76.0	8.45	122.3	68.3	8.49	129.1	57.2	8.55
	99	99.5	99.5	8.63	98.9	98.9	8.68	104.2	94.0	8.72	109.8	84.1	8.76	116.3	75.3	8.82	120.3	67.7	8.86	127.1	56.5	8.93
	103	98.2	98.2	9.00	97.3	97.3	9.05	102.6	93.1	9.08	108.0	83.3	9.12	114.4	74.6	9.19	118.4	67.0	9.24	125.0	55.7	9.31
	106	97.2	97.2	9.28	96.1	96.1	9.32	101.3	92.5	9.36	106.7	82.7	9.39	113.0	74.0	9.47	116.9	66.5	9.52	123.5	55.2	9.59
	110	96.0	96.0	9.65	94.5	94.5	9.69	99.6	91.5	9.72	104.9	81.9	9.76	111.1	73.3	9.84	114.9	65.9	9.89	121.5	54.4	9.97
	115	94.4	94.4	10.11	92.5	92.5	10.15	97.5	90.3	10.18	102.7	80.8	10.21	108.8	72.3	10.30	112.5	65.0	10.36	119.0	53.5	10.45
	118																					
	122																					

TC: Evaporator Total Capacity (1,000 BTU/h) Net TC = TC - Blower input

SC: Evaporator Sensible Capacity(1,000 BTU/h) Net SC = SC - Blower input

PI: Power input(kW) Compressor + outdoor fan System PI = PI + Blower input

Note: TC and SC represent the evaporator's heat load and do not account for the blower input. To calculate the net capacity, subtract the blower input from each value.

is shown as reference data

The blank areas indicate that operation at this compressor speed is not possible under those conditions.

ID DB		85																				
ID WB		57			61			64			67			70			72			75		
ID CFM	OD DB	TC	SC	PI	TC	SC	PI	TC	SC	PI	TC	SC	PI	TC	SC	PI	TC	SC	PI	TC	SC	PI
	23	113.9	113.9	4.61	116.7	107.0	4.62	116.5	106.9	4.40	122.7	99.7	4.28	129.9	91.3	4.11	134.4	83.6	4.01	142.0	75.3	3.82
	30	113.8	113.8	4.64	116.5	106.9	4.64	116.3	106.8	4.42	122.5	99.5	4.30	129.7	91.2	4.12	134.2	83.5	4.03	141.8	75.3	3.86
	40	113.6	113.6	4.68	116.3	106.6	4.67	116.0	106.5	4.45	122.2	99.3	4.33	129.4	91.0	4.15	133.9	83.3	4.05	141.6	75.1	3.91
	50	113.4	113.4	4.72	116.0	106.4	4.60	115.8	106.3	4.44	121.9	99.1	4.35	129.2	90.8	4.32	133.6	83.1	4.30	141.3	75.0	4.26
	54	113.4	113.4	4.74	115.9	106.3	4.74	115.7	106.2	4.68	121.8	99.0	4.68	129.0	90.7	4.67	133.5	83.1	4.66	141.2	74.9	4.64
	58	113.3	113.3	4.90	115.8	106.2	4.98	115.6	106.1	4.98	121.7	98.9	5.04	128.9	90.6	5.03	133.4	83.0	5.03	141.1	74.9	5.02
	62	112.6	112.6	5.27	115.1	105.8	5.36	114.8	105.7	5.34	121.0	98.5	5.40	128.1	90.3	5.40	132.5	82.7	5.40	139.6	74.1	5.40
	66	111.3	111.3	5.65	113.5	105.1	5.73	113.2	105.0	5.71	119.3	97.9	5.76	126.3	89.6	5.77	130.7	82.1	5.78	137.7	73.3	5.78
	70	110.0	110.0	6.02	111.9	104.3	6.10	111.6	104.2	6.07	117.5	97.2	6.13	124.5	89.0	6.14	128.8	81.5	6.15	135.7	72.5	6.16
	72	109.4	109.4	6.21	111.0	103.9	6.29	110.8	103.8	6.25	116.7	96.8	6.31	123.6	88.7	6.33	127.9	81.2	6.34	134.8	72.1	6.35
	75	108.4	108.4	6.49	109.8	103.3	6.57	109.6	103.2	6.53	115.4	96.3	6.58	122.3	88.2	6.60	126.5	80.7	6.62	133.3	71.4	6.64
2700	79	107.1	107.1	6.87	108.2	102.5	6.94	108.0	102.4	6.89	113.7	95.5	6.94	120.4	87.5	6.97	124.6	80.1	6.99	131.4	70.6	7.02
CFM	83	105.8	105.8	7.24	106.6	101.7	7.31	106.3	101.6	7.26	112.0	94.7	7.30	118.6	86.8	7.34	122.7	79.5	7.36	129.5	69.8	7.40
	87	104.6	104.6	7.62	105.0	100.9	7.68	104.7	100.8	7.62	110.3	94.0	7.67	116.8	86.1	7.71	120.9	78.8	7.74	127.5	68.9	7.78
	91	103.3	103.3	7.99	103.3	100.0	8.05	103.1	99.9	7.98	108.6	93.1	8.03	115.0	85.3	8.08	119.0	78.1	8.11	125.6	68.1	8.16
	93	102.6	102.6	8.18	102.5	99.6	8.24	102.3	99.5	8.17	107.7	92.7	8.21	114.1	84.9	8.26	118.1	77.8	8.30	124.6	67.7	8.35
	95	102.0	102.0	8.37	101.7	101.7	8.43	101.5	101.5	8.35	106.9	92.3	8.39	113.2	84.6	8.45	117.1	77.4	8.48	123.7	67.2	8.54
	99	100.7	100.7	8.75	100.1	100.1	8.80	99.9	99.9	8.71	105.2	91.5	8.75	111.4	83.8	8.82	115.3	76.7	8.86	121.7	66.4	8.92
	103	99.4	99.4	9.12	98.5	98.5	9.17	98.3	98.3	9.08	103.5	90.6	9.12	109.6	83.0	9.19	113.4	76.0	9.23	119.8	65.5	9.30
	106	98.4	98.4	9.40	97.2	97.2	9.45	97.0	97.0	9.35	102.2	89.9	9.39	108.3	82.4	9.46	112.0	75.4	9.51	118.3	64.9	9.59
	110	97.1	97.1	9.78	95.6	95.6	9.82	95.4	95.4	9.72	100.5	89.0	9.75	106.4	81.6	9.83	110.1	74.7	9.88	116.4	64.0	9.97
	115	95.5	95.5	10.25	93.6	93.6	10.29	93.4	93.4	10.17	98.4	87.9	10.20	104.2	80.5	10.29	107.8	73.7	10.35	114.0	62.9	10.44
	118																					
	122																					
	23	116.7	116.7	4.61	119.6	112.8	4.62	119.3	112.6	4.40	125.7	105.0	4.28	133.1	96.2	4.11	137.7	88.1	4.01	145.5	79.4	3.83
	30	116.6	116.6	4.64	119.4	112.6	4.64	119.1	112.5	4.43	125.5	104.9	4.30	132.9	96.1	4.13	137.5	88.0	4.03	145.3	79.3	3.86
	40	116.4	116.4	4.68	119.1	112.4	4.67	118.9	112.2	4.45	125.2	104.6	4.33	132.6	95.9	4.15	137.2	87.8	4.05	145.1	79.1	3.92
	50	116.2	116.2	4.72	118.9	112.1	4.60	118.6	112.0	4.45	124.9	104.4	4.36	132.3	95.6	4.32	136.9	87.6	4.30	144.8	79.0	4.27
	54	116.1	116.1	4.74	118.8	112.0	4.74	118.5	111.9	4.68	124.8	104.3	4.68	132.2	95.6	4.67	136.8	87.5	4.66	144.7	79.0	4.65
	58	116.1	116.1	4.90	118.7	111.9	4.99	118.4	111.8	4.98	124.7	104.2	5.04	132.1	95.5	5.04	136.6	87.4	5.03	144.6	78.9	5.03
	62	115.4	115.4	5.27	117.9	111.5	5.36	117.7	111.3	5.34	123.9	103.8	5.40	131.3	95.1	5.41	135.8	87.1	5.41	143.0	78.1	5.41
	66	114.1	114.1	5.65	116.2	110.7	5.73	116.0	110.6	5.71	122.2	103.1	5.77	129.4	94.4	5.77	133.9	86.5	5.78	141.0	77.2	5.79
	70	112.7	112.7	6.03	114.6	109.9	6.10	114.3	109.8	6.07	120.4	102.4	6.13	127.6	93.8	6.14	132.0	85.9	6.15	139.0	76.4	6.17
	72	112.1	112.1	6.21	113.8	109.5	6.29	113.5	109.4	6.26	119.5	102.0	6.31	126.6	93.4	6.33	131.0	85.6	6.34	138.1	75.9	6.36
	75	111.1	111.1	6.50	112.5	108.9	6.57	112.3	108.8	6.53	118.2	101.4	6.58	125.2	92.9	6.61	129.6	85.1	6.62	136.6	75.3	6.64
3100	79	109.8	109.8	6.87	110.8	108.0	6.94	110.6	107.9	6.89	116.5	100.6	6.95	123.4	92.2	6.97	127.6	84.4	6.99	134.6	74.4	7.02
CFM	83	108.4	108.4	7.25	109.2	107.2	7.31	108.9	107.0	7.26	114.7	99.8	7.31	121.5	91.4	7.34	125.7	83.7	7.37	132.6	73.5	7.40
	87	107.1	107.1	7.62	107.5	106.3	7.69	107.3	106.2	7.62	113.0	99.0	7.67	119.7	90.7	7.71	123.8	83.0	7.74	130.6	72.6	7.78
	91	105.8	105.8	8.00	105.9	105.4	8.06	105.6	105.2	7.99	111.3	98.1	8.03	117.8	89.9	8.08	121.9	82.3	8.11	128.7	71.7	8.16
	93	105.1	105.1	8.19	105.0	104.9	8.24	104.8	104.8	8.17	110.4	97.7	8.21	116.9	89.5	8.27	121.0	82.0	8.30	127.7	71.3	8.35
	95	104.5	104.5	8.37	104.2	104.2	8.43	104.0	104.0	8.35	109.5	97.3	8.40	116.0	89.1	8.45	120.0	81.6	8.49	126.7	70.8	8.54
	99	103.1	103.1	8.75	102.5	102.5	8.80	102.3	102.3	8.72	107.8	96.4	8.76	114.1	88.3	8.82	118.1	80.8	8.86	124.7	69.9	8.92
	103	101.8	101.8	9.12	100.9	100.9	9.18	100.7	100.7	9.08	106.0	95.5	9.12	112.3	87.4	9.19	116.2	80.1	9.24	122.7	69.0	9.30
	106	100.8	100.8	9.41	99.6	99.6	9.45	99.4	99.4	9.36	104.7	94.7	9.39	110.9	86.8	9.47	114.7	79.5	9.52	121.2	68.3	9.59
	110	99.5	99.5	9.78	98.0	98.0	9.83	97.7	97.7	9.72	103.0	93.8	9.75	109.0	85.9	9.84	112.8	78.7	9.89	119.3	67.4	9.97
	115	97.8	97.8	10.25	95.9	95.9	10.29	95.7	95.7	10.18	100.8	92.6	10.21	106.7	84.8	10.30	110.4	77.7	10.36	116.8	66.2	10.45
	118																					
	122																					
	23	118.9	118.9	4.62	121.8	117.2	4.62	121.6	117.1	4.41	128.0	109.2	4.28	135.6	100.0	4.11	140.3	91.6	4.01	148.2	82.5	3.83
	30	118.8	118.8	4.64	121.6	117.0	4.64	121.4	116.9	4.43	127.8	109.0	4.30	135.4	99.8	4.13	140.1	91.4	4.03	148.1	82.4	3.86
	40	118.6	118.6	4.68	121.4	116.8	4.67	121.1	116.6	4.46	127.6	108.8	4.33	135.1	99.6	4.16	139.8	91.2	4.05	147.8	82.3	3.92
	50	118.4	118.4	4.73	121.1	116.5	4.60	120.8	116.4	4.45	127.3	108.5	4.36	134.8	99.4	4.32	139.5	91.0	4.30	147.5	82.1	4.27
	54	118.3	118.3	4.74	121.0	116.4	4.74	120.7	116.3	4.68	127.2	108.4	4.68	134.7	99.3	4.67	139.4	91.0	4.66	147.4	82.1	4.65
	58	118.3	118.3	4.90	120.9	116.3	4.99	120.6	116.2	4.98	127.1	108.3	5.04	134.6	99.2	5.04	139.2	90.9	5.03	147.3	82.0	5.03
	62	117.6	117.6	5.28	120.1	115.9	5.36	119.9	115.7	5.34	126.3	107.9	5.41	133.7	98.8	5.41	138.4	90.5	5.41	145.7	81.1	5.41
	66	116.2	116.2	5.65	118.4	115.1	5.73	118.2	114.9	5.71	124.5	107.2	5.77	131.8	98.2	5.78	136.4	89.9	5.78	143.7	80.3	5.79
	70	114.9	114.9	6.03	116.8	114.2	6.10	116.5	114.1	6.07	122.7	106.4	6.13	130.0	97.5	6.14	134.5	89.2	6.15	141.7	79.4	6.17
	72	114.2	114.2	6.22	115.9	113.8	6.29	115.7	113.7	6.26	121.8	106.0	6.31	129.0	97.1	6.33	133.5	88.9	6.34	140.7	78.9	6.36
	75	113.2	113.2	6.50	114.6	113.2	6.57	114.4	113.0	6.53	120.5	105.4	6.58	127.6	96.5	6.61	132.0	88.4	6.62	139.2	78.2	6.64
3500	79	111.8	111.8	6.87	112.9	112.3	6.94	112.7	112.2	6.90	118.7	104.6	6.95	125.7	95.8	6.98	130.1	87.7	7.00	137.1	77.3	7.02
CFM	83	110.5	110.5	7.25	111.2	111.4	7.31	111.0	111.3	7.26	116.9	103.7	7.31	123.8	95.0	7.34	128.1	87.0	7.37	135.1	76.4	7.40
	87	109.1	109.1	7.62	109.6	110.5	7.69	109.3	110.3	7.63	115.1	102.9	7.67	122.0	94.2	7.71	126.2	86.3	7.74	133.1	75.5	7.79
	91	107.8	107.8	8.00	107.9	109.5	8.06	107.6	109.4	7.99	113.4	102.0	8.03	120.1	93.4	8.08	124.2	85.6	8.12	131.1	74.6	8.17
	93	107.1	107.1	8.19	107.0	109.0	8.25	106.8	108.9	8.17	112.5	101.5	8.22	119.1	93.0	8.27	123.2	85.2	8.30	130.1	74.1	8.36
	95	106.4	106.4	8.38	106.2	106.2	8.43	105.9	105.9	8.35	111.6	101.1	8.40	118.2	92.6	8.45	122.3	84.8	8.49	129.1	73.6	8.55
	99	105.1	105.1	8.75	104.5	104.5	8.80	104.2	104.2	8.72	109.8	100.2	8.76	116.3	91.7	8.82	120.3	84.0	8.86	127.1	72.7	8.93
	103	103.7	103.7	9.13	102.8	102.8	9.18	102.6	102.6	9.08	108.0	99.2	9.12	114.4	90.9	9.19	118.4	83.2	9.24	125.0	71.7	9.31
	106	102.7	102.7	9.41	101.5	101.5	9.46	101.3	101.3	9.36	106.7	98.5	9.39	113.0	90.2	9.47	116.9	82.6	9.52	123.5	71.0	9.59
	110	101.4	101.4	9.78	99.8	99.8	9.83	99.6	99.6	9.72	104.9	97.5	9.76	111.1	89.3	9.84	114.9	81.8	9.89	121.5	70.1	9.97
	115	99.7	99.7	10.25	97.7	97.7	10.29	97.5	97.5	10.18	102.7	96.2	10.21	108.8	88.1	10.30	112.5	80.7	10.36	119.0	68.8	10.45
	118																					
	122																					

TC: Evaporator Total Capacity (1,000 BTU/h) Net TC = TC - Blower input

SC: Evaporator Sensible Capacity(1,000 BTU/h) Net SC = SC - Blower input

PI: Power input(kW) Compressor + outdoor fan System PI = PI + Blower input

Note: TC and SC represent the evaporator's heat load and do not account for the blower input. To calculate the net capacity, subtract the blower input from each value.

is shown as reference data

The blank areas indicate that operation at this compressor speed is not possible under those conditions.

ID DB		70												75																	
ID WB		57			61			64			67			57			61			64			67			70			72		
ID CFM	OD DB	TC	SC	PI	TC	SC	PI	TC	SC	PI	TC	SC	PI	TC	SC	PI	TC	SC	PI	TC	SC	PI	TC	SC	PI	TC	SC	PI	TC	SC	PI
	23	26.5	26.5	0.44	26.5	26.5	0.44	26.5	26.5	0.44	27.7	15.5	0.43	28.6	28.6	0.42	28.6	28.6	0.42	28.6	28.6	0.42	28.6	28.6	0.42	29.4	20.7	0.41	30.4	15.4	0.40
	30	26.4	26.4	0.44	26.4	26.4	0.44	26.4	26.4	0.44	27.7	15.5	0.43	28.6	28.6	0.42	28.6	28.6	0.42	28.6	28.6	0.42	28.6	28.6	0.42	29.3	20.7	0.41	30.3	15.3	0.40
	40	26.3	26.3	0.44	26.3	26.3	0.44	26.3	26.3	0.44	27.6	15.4	0.43	28.5	28.5	0.42	28.5	28.5	0.42	28.5	28.5	0.42	28.5	28.5	0.42	29.2	20.6	0.41	30.2	15.3	0.40
	50	26.2	26.2	0.44	26.2	26.2	0.44	26.2	26.2	0.44	27.5	15.4	0.43	28.4	28.4	0.42	28.4	28.4	0.42	28.4	28.4	0.42	28.3	28.3	0.42	29.1	20.5	0.41	30.1	15.2	0.40
	54	26.2	26.2	0.44	26.2	26.2	0.44	26.2	26.2	0.44	27.4	15.3	0.43	28.3	28.3	0.42	28.3	28.3	0.42	28.3	28.3	0.42	28.3	28.3	0.42	29.1	20.5	0.41	30.0	15.2	0.40
	58	26.1	26.1	0.44	26.1	26.1	0.44	26.1	26.1	0.44	27.4	15.3	0.43	28.3	28.3	0.42	28.3	28.3	0.42	28.3	28.3	0.42	28.3	28.3	0.42	29.0	20.5	0.41	30.0	15.2	0.40
	62	26.1	26.1	0.44	26.1	26.1	0.44	26.1	26.1	0.44	27.3	15.3	0.43	28.2	28.2	0.42	28.2	28.2	0.42	28.2	28.2	0.42	28.2	28.2	0.42	29.0	20.4	0.41	29.9	15.1	0.40
	66	26.1	26.1	0.44	26.1	26.1	0.44	26.1	26.1	0.44	27.3	15.3	0.43	28.2	28.2	0.42	28.2	28.2	0.42	28.2	28.2	0.42	28.2	28.2	0.42	28.9	20.4	0.41	29.9	15.1	0.40
	70	26.0	26.0	0.49	26.0	26.0	0.49	26.0	26.0	0.49	27.3	15.4	0.48	28.2	28.2	0.47	28.2	28.2	0.47	28.2	28.2	0.47	28.1	28.1	0.47	28.9	20.6	0.46	29.8	15.2	0.44
	72	25.8	25.8	0.54	25.8	25.8	0.54	25.8	25.8	0.54	27.1	15.4	0.53	27.9	27.9	0.52	27.9	27.9	0.52	27.9	27.9	0.52	27.9	27.9	0.52	28.7	20.5	0.51	29.6	15.2	0.50
	75	25.5	25.5	0.62	25.5	25.5	0.62	25.5	25.5	0.62	26.7	15.3	0.60	27.6	27.6	0.59	27.6	27.6	0.59	27.6	27.6	0.59	27.6	27.6	0.59	28.3	20.4	0.58	29.3	15.1	0.57
3200	79	25.1	25.1	0.72	25.1	25.1	0.72	25.1	25.1	0.72	26.3	15.2	0.70	27.1	27.1	0.69	27.1	27.1	0.69	27.1	27.1	0.69	27.1	27.1	0.69	27.9	20.3	0.68	28.8	15.1	0.66
CFM	83	24.7	24.7	0.82	24.7	24.7	0.82	24.7	24.7	0.82	25.8	15.1	0.80	26.7	26.7	0.79	26.7	26.7	0.79	26.7	26.7	0.79	26.7	26.7	0.79	27.4	20.2	0.77	28.3	15.0	0.76
	87	24.2	24.2	0.93	24.2	24.2	0.93	24.2	24.2	0.93	25.4	15.0	0.90	26.2	26.2	0.89	26.2	26.2	0.89	26.2	26.2	0.89	26.2	26.2	0.89	26.9	20.1	0.87	27.8	14.9	0.85
	91	23.8	23.8	1.03	23.8	23.8	1.03	23.8	23.8	1.03	25.0	14.9	1.00	25.8	25.8	0.99	25.8	25.8	0.99	25.8	25.8	0.99	25.8	25.8	0.99	26.4	19.9	0.97	27.3	14.8	0.95
	93	23.6	23.6	1.08	23.6	23.6	1.08	23.6	23.6	1.08	24.7	14.9	1.05	25.5	25.5	1.03	25.5	25.5	1.03	25.5	25.5	1.03	25.5	25.5	1.03	26.2	19.9	1.02	27.1	14.7	0.99
	95	23.4	23.4	1.13	23.4	23.4	1.13	23.4	23.4	1.13	24.5	14.8	1.11	25.3	25.3	1.08	25.3	25.3	1.08	25.3	25.3	1.08	25.3	25.3	1.08	26.0	19.8	1.07	26.8	14.6	1.04
	99	23.0	23.0	1.24	23.0	23.0	1.24	23.0	23.0	1.24	24.1	14.7	1.21	24.9	24.9	1.18	24.9	24.9	1.18	24.9	24.9	1.18	24.8	24.8	1.18	25.5	19.6	1.16	26.3	14.5	1.14
	103	22.6	22.6	1.34	22.5	22.5	1.34	22.5	22.5	1.34	23.6	14.6	1.31	24.4	24.4	1.28	24.4	24.4	1.28	24.4	24.4	1.28	24.4	24.4	1.28	25.0	19.5	1.26	25.9	14.4	1.23
	106	22.2	22.2	1.42	22.2	22.2	1.42	22.2	22.2	1.42	23.3	14.5	1.38	24.1	24.1	1.36	24.1	24.1	1.36	24.1	24.1	1.36	24.0	24.0	1.36	24.7	19.3	1.33	25.5	14.3	1.30
	110	21.8	21.8	1.52	21.8	21.8	1.52	21.8	21.8	1.52	22.8	14.3	1.48	23.6	23.6	1.45	23.6	23.6	1.45	23.6	23.6	1.45	23.6	23.6	1.45	24.2	19.2	1.43	25.0	14.2	1.40
	115	21.3	21.3	1.65	21.3	21.3	1.65	21.3	21.3	1.65	22.3	14.2	1.61	23.0	23.0	1.58	23.0	23.0	1.58	23.0	23.0	1.58	23.0	23.0	1.58	23.6	18.9	1.55	24.4	14.0	1.52
	118	21.0	21.0	1.73	21.0	21.0	1.73	21.0	21.0	1.73	22.0	14.1	1.68	22.7	22.7	1.65	22.7	22.7	1.65	22.7	22.7	1.65	22.7	22.7	1.65	23.3	18.8	1.62	24.0	13.9	1.59
	122	20.5	20.5	1.83	20.5	20.5	1.83	20.5	20.5	1.83	21.5	13.9	1.78	22.2	22.2	1.75	22.2	22.2	1.75	22.2	22.2	1.75	22.2	22.2	1.75	22.8	18.6	1.72	23.6	13.8	1.68
	23	26.6	26.6	0.44	26.6	26.6	0.44	26.6	26.6	0.44	27.9	16.7	0.43	28.8	28.8	0.42	28.8	28.8	0.42	28.8	28.8	0.42	28.8	28.8	0.42	29.6	22.3	0.41	30.5	16.5	0.40
	30	26.6	26.6	0.44	26.6	26.6	0.44	26.6	26.6	0.44	27.8	16.6	0.43	28.7	28.7	0.42	28.7	28.7	0.42	28.7	28.7	0.42	28.7	28.7	0.42	29.5	22.2	0.41	30.5	16.4	0.40
	40	26.5	26.5	0.44	26.5	26.5	0.44	26.5	26.5	0.44	27.7	16.6	0.43	28.6	28.6	0.42	28.6	28.6	0.42	28.6	28.6	0.42	28.6	28.6	0.42	29.4	22.1	0.41	30.4	16.4	0.40
	50	26.4	26.4	0.44	26.4	26.4	0.44	26.4	26.4	0.44	27.6	16.5	0.43	28.5	28.5	0.42	28.5	28.5	0.42	28.5	28.5	0.42	28.5	28.5	0.42	29.3	22.0	0.41	30.2	16.3	0.40
	54	26.3	26.3	0.44	26.3	26.3	0.44	26.3	26.3	0.44	27.6	16.5	0.43	28.5	28.5	0.42	28.5	28.5	0.42	28.5	28.5	0.42	28.5	28.5	0.42	29.2	22.0	0.41	30.2	16.3	0.40
	58	26.3	26.3	0.44	26.3	26.3	0.44	26.3	26.3	0.44	27.6	16.4	0.43	28.4	28.4	0.42	28.4	28.4	0.42	28.4	28.4	0.42	28.4	28.4	0.42	29.2	22.0	0.41	30.2	16.3	0.40
	62	26.3	26.3	0.44	26.3	26.3	0.44	26.3	26.3	0.44	27.5	16.4	0.43	28.4	28.4	0.42	28.4	28.4	0.42	28.4	28.4	0.42	28.4	28.4	0.42	29.2	21.9	0.41	30.1	16.2	0.40
	66	26.2	26.2	0.44	26.2	26.2	0.44	26.2	26.2	0.44	27.5	16.4	0.43	28.4	28.4	0.42	28.4	28.4	0.42	28.4	28.4	0.42	28.4	28.4	0.42	29.1	21.9	0.41	30.1	16.2	0.40
	70	26.2	26.2	0.49	26.2	26.2	0.49	26.2	26.2	0.49	27.4	16.5	0.47	28.3	28.3	0.47	28.3	28.3	0.47	28.3	28.3	0.47	28.3	28.3	0.47	29.1	22.1	0.46	30.0	16.4	0.44
	72	26.0	26.0	0.54	26.0	26.0	0.54	26.0	26.0	0.54	27.2	16.5	0.52	28.1	28.1	0.51	28.1	28.1	0.51	28.1	28.1	0.51	28.1	28.1	0.51	28.8	22.0	0.51	29.8	16.3	0.49
	75	25.7	25.7	0.62	25.7	25.7	0.62	25.7	25.7	0.62	26.9	16.4	0.60	27.8	27.8	0.59	27.8	27.8	0.59	27.8	27.8	0.59	27.8	27.8	0.59	28.5	21.9	0.58	29.4	16.3	0.56
3600	79	25.2	25.2	0.72	25.2	25.2	0.72	25.2	25.2	0.72	26.4	16.3	0.70	27.3	27.3	0.69	27.3	27.3	0.69	27.3	27.3	0.69	27.3	27.3	0.69	28.0	21.8	0.67	28.9	16.2	0.66
CFM	83	24.8	24.8	0.82	24.8	24.8	0.82	24.8	24.8	0.82	26.0	16.2	0.80	26.8	26.8	0.78	26.8	26.8	0.78	26.8	26.8	0.78	26.8	26.8	0.78	27.5	21.7	0.77	28.5	16.1	0.75
	87	24.4	24.4	0.92	24.4	24.4	0.92	24.4	24.4	0.92	25.6	16.1	0.90	26.4	26.4	0.88	26.4	26.4	0.88	26.4	26.4	0.88	26.4	26.4	0.88	27.1	21.5	0.87	28.0	16.0	0.85
	91	24.0	24.0	1.03	24.0	24.0	1.03	24.0	24.0	1.03	25.1	16.0	1.00	25.9	25.9	0.98	25.9	25.9	0.98	25.9	25.9	0.98	25.9	25.9	0.98	26.6	21.4	0.96	27.5	15.8	0.94
	93	23.8	23.8	1.08	23.7	23.7	1.08	23.7	23.7	1.08	24.9	15.9	1.05	25.7	25.7	1.03	25.7	25.7	1.03	25.7	25.7	1.03	25.7	25.7	1.03	26.4	21.3	1.01	27.2	15.8	0.99
	95	23.5	23.5	1.13	23.5	23.5	1.13	23.5	23.5	1.13	24.7	15.9	1.10	25.5	25.5	1.08	25.5	25.5	1.08	25.5	25.5	1.08	25.4	25.4	1.08	26.1	21.2	1.06	27.0	15.7	1.04
	99	23.1	23.1	1.23	23.1	23.1	1.23	23.1	23.1	1.23	24.2	15.8	1.20	25.0	25.0	1.18	25.0	25.0	1.18	25.0	25.0	1.18	25.0	25.0	1.18	25.7	21.1	1.16	26.5	15.6	1.13
	103	22.7	22.7	1.33	22.7	22.7	1.33	22.7	22.7	1.33	23.8	15.6	1.30	24.5	24.5	1.27	24.5	24.5	1.27	24.5	24.5	1.27	24.5	24.5	1.27	25.2	20.9	1.25	26.0	15.5	1.22
	106	22.4	22.4	1.41	22.4	22.4	1.41	22.4	22.4	1.41	23.4	15.5	1.37	24.2	24.2	1.35	24.2	24.2	1.35	24.2	24.2	1.35	24.2	24.2	1.35	24.8	20.7	1.32	25.6	15.4	1.30
	110	21.9	21.9	1.51	21.9	21.9	1.51	21.9	21.9	1.51	23.0	15.4	1.47	23.7	23.7	1.45	23.7	23.7	1.45	23.7	23.7	1.45	23.7	23.7	1.45	24.4	20.6	1.42	25.2	15.2	1.39
	115	21.4	21.4	1.64	21.4	21.4	1.64	21.4	21.4	1.64	22.4	15.2	1.60	23.2	23.2	1.57	23.2	23.2	1.57	23.2	23.2	1.57	23.1	23.1	1.57	23.8	20.3	1.54	24.5	15.0	1.51
	118	21.1	21.1	1.72	21.1	21.1	1.72	21.1	21.1	1.72	22.1	15.1	1.67	22.8	22.8	1.64	22.8	22.8	1.64	22.8	22.8	1.64	22.8	22.8	1.64	23.4	20.1	1.61	24.2	14.9	1.58
	122	20.7	20.7	1.82	20.7	20.7	1.82	20.7	20.7	1.82	21.6	14.9	1.77	22.4	22.4	1.74	22.4	22.4	1.74	22.4	22.4	1.74	22.3	22.3	1.74	22.9	19.9	1.71	23.7	14.8	1.67
	23	26.8	26.8	0.44	26.8	26.8	0.44	26.8	26.8	0.44	28.0	17.8	0.43	29.0	29.0	0.42	29.0	29.0	0.42	29.0	29.0	0.42	28.9	28.9	0.42	29.7	23.7	0.41	30.7	17.6	0.40
	30	26.7	26.7	0.44	26.7	26.7	0.44	26.7	26.7	0.44	28.0	17.7	0.43	28.9	28.9	0.42	28.9	28.9	0.42	28.9	28.9	0.42	28.9	28.9	0.42	29.6	23.7	0.41	30.6	17.5	0.40
	40	26.6	26.6	0.44	26.6	26.6	0.44	26.6	26.6	0.44	27.9	17.6	0.43	28.8	28.8	0.42	28.8	28.8	0.42	28.8	28.8	0.42	28.8	28.8	0.42	29.5	23.6	0.41	30.5	17.5	0.40
	50	26.5	26.5	0.44	26.5	26.5	0.44	26.5	26.5	0.44	27.8	17.6	0.43	28.7	28.7	0.42	28.7	28.7	0.42	28.7	28.7	0.42	28.7	28.7	0.42	29.4	23.5	0.41	30.4	17.4	0.40
	54	26.5	26.5	0.44	26.5	26.5	0.44	26.5	26.5	0.44	27.7	17.6	0.43	28.6	28.6	0.42	28.6	28.6	0.42	28.6	28.6	0.42	28.6	28.6	0.42	29.4	23.5	0.41	30.4	17.4	0.40
	58	26.4	26.4	0.44	26.4	26.4	0.44	26.4	26.4	0.44	27.7	17.5	0.43	28.6	28.6	0.42	28.6	28.6	0.42	28.6	28.6	0.42	28.6	28.6	0.42	29.3	23.4	0.41	30.3	17.3	0.40
	62	26.4	26.4	0.44	26.4	26.4	0.44	26.4	26.4	0.44	27.7	17.5	0.43	28.6	28.6	0.42	28.6	28.6	0.42	28.6	28.6	0.42	28.5	28.5	0.42	29.3	23.4	0.41	30.3	17.3	0.40
	66	26.4	26.4	0.44	26.4	26.4	0.44	26.3	26.3	0.44	27.6	17.5	0.43	28.5	28.5	0.42	28.5	28.5	0.42	28.5	28.5	0.42	28.5	28.5	0.42	29.3	23.3	0.41	30.2	17.3	0.40
	70	26.3	26.3	0.48	26.3	26.3	0.48	26.3	26.3	0.48	27.6	17.6	0.47	28.5	28.5	0.46	28.5	28.5	0.46	28.5	28.5	0.46	28.5	28.5	0.46	29.2	23.5	0.46	30.2	17.4	0.44
	72	26.1	26.1	0.54	26.1	26.1	0.54	26.1	26.1	0.54	27.4	17.6	0.52	28.3	28.3	0.51	28.3	28.3	0.51	28.3	28.3	0.51	28.2	28.2	0.51	29.0	23.5	0.50	29.9	17.4	0.49
	75	25.8	25.8	0.61	25.8	25.8	0.61	25.8	25.8	0.61	27.0	17.5	0.60	27.9	27.9	0.59	27.9	27.9	0.59	27.9	27.9	0.59	27.9	27.9	0.59	28.6	23.4	0.58	29.6	17.3	0.56
4000	79	25.4	25.4	0.71	25.4	25.4	0.71	25.4	25.4	0.71	26.6	17.4	0.70	27.4	27.4	0.68	27.4	27.4	0.68	27.4	27.4	0.68	27.4	27.4	0.68	28.2	23.3	0.67	29.1	17.2	0.66
CFM	83	24.9	24.9	0.82	24.9	24.9	0.82	24.9	24.9	0.82	26.1	17.3	0.80	27.0	27.0	0.78	27.0	27.0	0.78	27.0	27.0	0.78	27.0	27.0	0.78	27.7	23.1	0.77	28.6	17.1	0.75
	87	24.5	24.5	0.92	24.5	24.5	0.92	24.5	24.5	0.92	25.7	17.2	0.90	26.5	26.5	0.88	26.5	26.5	0.88	26.5	26.5	0.88	26.5	26.5	0.88	27.2	23.0	0.86	28.1	17.0	0.84
	91	24.1	24.1	1.02	24.1	24.1	1.02	24.1	24.1	1.02	25.2	17.1	1.00	26.1	26.1	0.98	26.1	26.1	0.98	26.1	26.1	0.98	26.0	26.0	0.98	26.7	22.8	0.96	27.6	16.9	0.94
	93	23.9	23.9	1.07	23.9	23.9	1.07	23.9	23.9	1.07	25.0	17.0	1.04	25.8	25.8	1.03	25.8	25.8	1.03	25.8	25.8	1.03	25.8	25.8	1.02	26.5	22.7	1.01	27.4	16.8	0.98
	95	23.7	23.7	1.12	23.7	23.7	1.12	23.7	23.7	1.12	24.8	16.9	1.09	25.6	25.6	1.07	25.6	25.6	1.07	25.6	25.6	1.07	25.6	25.6	1.07	26.3	22.6	1.06	27.1	16.8	1.03
	99	23.2	23.2	1.23	23.2	23.2	1.23	23.2	23.2	1.23	24.3	16.8	1.19	25.1	25.1	1.17	25.1	25.1	1.17	25.1	25.1	1.17	25.1	25.1	1.17	25.8	22.4	1.15	26.6	16.6	1.13
	103	22.8	22.8	1.33	22.8	22.8	1.33	22.8	22.8	1.33	23.9	16.7	1.29	24.7	24.7	1.27	24.7	24.7	1.27	24.7	24.7	1.27	24.7	24.7	1.27	25.3	22.3	1.25	26.1	16.5	1.22
	106	22.5	22.5	1.40	22.5	22.5	1.40	22.5	22.5	1.40	23.6	16.6	1.37	24.3	24.3	1.34	24.3	24.3	1.34	24.3	24.3	1.34	24.3	24.3	1.34	25.0	22.1	1.32	25.8	16.4	1.29
	110	22.1	22.1	1.51	22.0	22.0	1.51	22.0	22.0	1.51	23.1	16.4	1.47	23.9	23.9	1.44	23.9	23.9	1.44	23.9	23.9	1.44	23.8	23.8	1.44	24.5	21.9	1.42	25.3	16.2	1.38
	115	21.5	21.5	1.63	21.5	21.5	1.63	21.5	21.5	1.63	22.5	16.2	1.59	23.3	23.3	1.56	23.3	23.3	1.56	23.3	23.3	1.56	23.3	23.3	1.56	23.9	21.6	1.54	24.7	16.0	1.50
	118	21.2	21.2	1.71	21.2	21.2	1.71	21.2	21.2	1.71	22.2	16.1	1.67	22.9	22.9	1.64	22.9	22.9	1.64	22.9	22.9	1.64	22.9	22.9	1.64	23.5	21.5	1.61	24.3	15.9	1.57
	122	20.8	20.8	1.81	20.8	20.8	1.81	20.8	20.8	1.81	21.8	15.9	1.77	22.5	22.5	1.73	22.5	22.5	1.73	22.5	22.5	1.73	22.5	22.5	1.73	23.1	21.3	1.70	23.8	15.7	1.67

TC: Evaporator Total Capacity (1,000 BTU/h) Net TC = TC - Blower input

SC: Evaporator Sensible Capacity(1,000 BTU/h) Net SC = SC - Blower input

PI: Power input(kW) Compressor + outdoor fan System PI = PI + Blower input

Note: TC and SC represent the evaporator's heat load and do not account for the blower input. To calculate the net capacity, subtract the blower input from each value.

is shown as reference data

The blank areas indicate that operation at this compressor speed is not possible under those conditions.

ID DB		80																				
ID WB		57			61			64			67			70			72			75		
ID CFM	OD DB	TC	SC	PI	TC	SC	PI	TC	SC	PI	TC	SC	PI	TC	SC	PI	TC	SC	PI	TC	SC	PI
3200 CFM	23	30.9	30.9	0.40	30.9	30.9	0.40	30.9	30.9	0.40	30.9	30.9	0.40	30.9	30.9	0.40	30.9	30.9	0.39	32.6	20.9	0.33
	30	30.8	30.8	0.40	30.8	30.8	0.40	30.8	30.8	0.40	30.8	30.8	0.40	30.8	30.8	0.40	30.8	30.8	0.39	32.5	20.8	0.33
	40	30.7	30.7	0.40	30.7	30.7	0.40	30.7	30.7	0.40	30.7	30.7	0.40	30.7	30.7	0.40	30.7	30.7	0.39	32.4	20.7	0.34
	50	30.6	30.6	0.40	30.6	30.6	0.40	30.6	30.6	0.40	30.6	30.6	0.40	30.6	30.6	0.40	30.6	30.6	0.40	32.2	20.7	0.34
	54	30.5	30.5	0.40	30.5	30.5	0.40	30.5	30.5	0.40	30.5	30.5	0.40	30.5	30.5	0.40	30.5	30.5	0.40	32.2	20.6	0.34
	58	30.5	30.5	0.40	30.5	30.5	0.40	30.5	30.5	0.40	30.5	30.5	0.40	30.5	30.5	0.40	30.5	30.5	0.40	32.1	20.6	0.34
	62	30.4	30.4	0.40	30.4	30.4	0.40	30.4	30.4	0.40	30.4	30.4	0.40	30.4	30.4	0.40	30.4	30.4	0.40	32.1	20.6	0.34
	66	30.4	30.4	0.40	30.4	30.4	0.40	30.4	30.4	0.40	30.4	30.4	0.40	30.4	30.4	0.40	30.4	30.4	0.40	32.0	20.5	0.34
	70	30.3	30.3	0.44	30.3	30.3	0.44	30.3	30.3	0.44	30.3	30.3	0.44	30.3	30.3	0.44	30.4	30.4	0.44	32.0	20.7	0.39
	72	30.1	30.1	0.49	30.1	30.1	0.49	30.1	30.1	0.49	30.1	30.1	0.49	30.1	30.1	0.49	30.1	30.1	0.49	31.7	20.6	0.44
	75	29.7	29.7	0.56	29.7	29.7	0.56	29.7	29.7	0.56	29.8	29.8	0.56	29.7	29.7	0.56	29.8	29.8	0.56	31.2	20.5	0.51
	79	29.3	29.3	0.65	29.3	29.3	0.65	29.3	29.3	0.65	29.3	29.3	0.65	29.3	29.3	0.65	29.3	29.3	0.65	30.7	20.3	0.61
	83	28.8	28.8	0.75	28.8	28.8	0.75	28.8	28.8	0.75	28.8	28.8	0.75	28.8	28.8	0.75	28.8	28.8	0.75	30.1	20.2	0.71
	87	28.3	28.3	0.84	28.3	28.3	0.84	28.3	28.3	0.84	28.3	28.3	0.84	28.3	28.3	0.84	28.3	28.3	0.84	29.5	20.0	0.80
	91	27.8	27.8	0.94	27.8	27.8	0.94	27.8	27.8	0.94	27.8	27.8	0.94	27.8	27.8	0.94	27.8	27.8	0.94	29.0	19.8	0.90
	93	27.5	27.5	0.98	27.5	27.5	0.98	27.5	27.5	0.98	27.5	27.5	0.98	27.5	27.5	0.98	27.5	27.5	0.98	28.7	19.7	0.95
	95	27.3	27.3	1.03	27.3	27.3	1.03	27.3	27.3	1.03	27.3	27.3	1.03	27.3	27.3	1.03	27.3	27.3	1.03	28.4	19.6	1.00
	99	26.8	26.8	1.12	26.8	26.8	1.12	26.8	26.8	1.12	26.8	26.8	1.12	26.8	26.8	1.12	26.8	26.8	1.12	27.8	19.4	1.09
	103	26.3	26.3	1.22	26.3	26.3	1.22	26.3	26.3	1.22	26.3	26.3	1.22	26.3	26.3	1.22	26.3	26.3	1.22	27.3	19.2	1.19
	106	25.9	25.9	1.29	25.9	25.9	1.29	25.9	25.9	1.29	25.9	25.9	1.29	25.9	25.9	1.29	25.9	25.9	1.29	26.8	19.1	1.26
	110	25.4	25.4	1.38	25.4	25.4	1.38	25.4	25.4	1.38	25.4	25.4	1.38	25.4	25.4	1.38	25.4	25.4	1.38	26.3	18.9	1.36
	115	24.8	24.8	1.50	24.8	24.8	1.50	24.8	24.8	1.50	24.8	24.8	1.50	24.8	24.8	1.50	24.8	24.8	1.50	25.5	18.6	1.48
	118	24.4	24.4	1.57	24.4	24.4	1.57	24.4	24.4	1.57	24.4	24.4	1.57	24.4	24.4	1.57	24.5	24.5	1.57	25.1	18.4	1.56
	122	23.9	23.9	1.66	23.9	23.9	1.66	23.9	23.9	1.66	24.0	24.0	1.66	23.9	23.9	1.66	24.0	24.0	1.66	24.6	18.2	1.65
3600 CFM	23	31.1	31.1	0.40	31.1	31.1	0.40	31.1	31.1	0.40	31.1	31.1	0.40	31.1	31.1	0.40	31.1	31.1	0.39	32.8	22.4	0.33
	30	31.0	31.0	0.40	31.0	31.0	0.40	31.0	31.0	0.40	31.0	31.0	0.40	31.0	31.0	0.40	31.0	31.0	0.39	32.7	22.4	0.33
	40	30.9	30.9	0.40	30.9	30.9	0.40	30.9	30.9	0.40	30.9	30.9	0.40	30.9	30.9	0.40	30.9	30.9	0.39	32.6	22.3	0.33
	50	30.7	30.7	0.40	30.7	30.7	0.40	30.7	30.7	0.40	30.8	30.8	0.40	30.7	30.7	0.40	30.8	30.8	0.39	32.4	22.2	0.34
	54	30.7	30.7	0.40	30.7	30.7	0.40	30.7	30.7	0.40	30.7	30.7	0.40	30.7	30.7	0.40	30.7	30.7	0.39	32.4	22.1	0.34
	58	30.7	30.7	0.40	30.7	30.7	0.40	30.7	30.7	0.40	30.7	30.7	0.40	30.7	30.7	0.40	30.7	30.7	0.39	32.3	22.1	0.34
	62	30.6	30.6	0.40	30.6	30.6	0.40	30.6	30.6	0.40	30.6	30.6	0.40	30.6	30.6	0.40	30.6	30.6	0.39	32.3	22.1	0.34
	66	30.6	30.6	0.40	30.6	30.6	0.40	30.6	30.6	0.40	30.6	30.6	0.40	30.6	30.6	0.40	30.6	30.6	0.39	32.2	22.0	0.34
	70	30.5	30.5	0.44	30.5	30.5	0.44	30.5	30.5	0.44	30.5	30.5	0.44	30.5	30.5	0.44	30.5	30.5	0.44	32.2	22.2	0.39
	72	30.3	30.3	0.49	30.3	30.3	0.49	30.3	30.3	0.49	30.3	30.3	0.49	30.3	30.3	0.49	30.3	30.3	0.49	31.9	22.1	0.44
	75	29.9	29.9	0.56	29.9	29.9	0.56	29.9	29.9	0.56	29.9	29.9	0.56	29.9	29.9	0.56	29.9	29.9	0.56	31.4	22.0	0.51
	79	29.4	29.4	0.65	29.4	29.4	0.65	29.4	29.4	0.65	29.4	29.4	0.65	29.4	29.4	0.65	29.4	29.4	0.65	30.9	21.8	0.60
	83	28.9	28.9	0.74	28.9	28.9	0.74	28.9	28.9	0.74	28.9	28.9	0.74	28.9	28.9	0.74	28.9	28.9	0.74	30.3	21.7	0.70
	87	28.4	28.4	0.84	28.4	28.4	0.84	28.4	28.4	0.84	28.4	28.4	0.84	28.4	28.4	0.84	28.4	28.4	0.84	29.7	21.5	0.80
	91	27.9	27.9	0.93	27.9	27.9	0.93	27.9	27.9	0.93	27.9	27.9	0.93	27.9	27.9	0.93	28.0	28.0	0.93	29.1	21.3	0.90
	93	27.7	27.7	0.98	27.7	27.7	0.98	27.7	27.7	0.98	27.7	27.7	0.98	27.7	27.7	0.98	27.7	27.7	0.98	28.9	21.2	0.94
	95	27.4	27.4	1.02	27.4	27.4	1.02	27.4	27.4	1.02	27.4	27.4	1.02	27.4	27.4	1.02	27.5	27.5	1.02	28.6	21.1	0.99
	99	26.9	26.9	1.12	26.9	26.9	1.12	26.9	26.9	1.12	26.9	26.9	1.12	26.9	26.9	1.12	27.0	27.0	1.12	28.0	20.9	1.09
	103	26.4	26.4	1.21	26.4	26.4	1.21	26.4	26.4	1.21	26.5	26.5	1.21	26.4	26.4	1.21	26.5	26.5	1.21	27.4	20.7	1.19
	106	26.1	26.1	1.28	26.1	26.1	1.28	26.1	26.1	1.28	26.1	26.1	1.28	26.1	26.1	1.28	26.1	26.1	1.28	27.0	20.5	1.26
	110	25.6	25.6	1.37	25.6	25.6	1.37	25.6	25.6	1.37	25.6	25.6	1.37	25.6	25.6	1.37	25.6	25.6	1.37	26.4	20.3	1.35
	115	25.0	25.0	1.49	25.0	25.0	1.49	25.0	25.0	1.49	25.0	25.0	1.49	25.0	25.0	1.49	25.0	25.0	1.49	25.7	19.9	1.48
	118	24.6	24.6	1.56	24.6	24.6	1.56	24.6	24.6	1.56	24.6	24.6	1.56	24.6	24.6	1.56	24.6	24.6	1.56	25.3	19.8	1.55
	122	24.1	24.1	1.65	24.1	24.1	1.65	24.1	24.1	1.65	24.1	24.1	1.65	24.1	24.1	1.65	24.1	24.1	1.65	24.7	19.5	1.64
4000 CFM	23	31.2	31.2	0.40	31.2	31.2	0.40	31.2	31.2	0.40	31.2	31.2	0.40	31.2	31.2	0.40	31.2	31.2	0.39	33.0	23.9	0.33
	30	31.1	31.1	0.40	31.1	31.1	0.40	31.1	31.1	0.40	31.1	31.1	0.40	31.1	31.1	0.40	31.1	31.1	0.39	32.9	23.8	0.33
	40	31.0	31.0	0.40	31.0	31.0	0.40	31.0	31.0	0.40	31.0	31.0	0.40	31.0	31.0	0.40	31.0	31.0	0.39	32.7	23.7	0.33
	50	30.9	30.9	0.40	30.9	30.9	0.40	30.9	30.9	0.40	30.9	30.9	0.40	30.9	30.9	0.40	30.9	30.9	0.39	32.6	23.6	0.33
	54	30.9	30.9	0.40	30.9	30.9	0.40	30.9	30.9	0.40	30.9	30.9	0.40	30.9	30.9	0.40	30.9	30.9	0.39	32.6	23.6	0.33
	58	30.8	30.8	0.40	30.8	30.8	0.40	30.8	30.8	0.40	30.8	30.8	0.40	30.8	30.8	0.40	30.8	30.8	0.39	32.5	23.6	0.33
	62	30.8	30.8	0.40	30.8	30.8	0.40	30.8	30.8	0.40	30.8	30.8	0.40	30.8	30.8	0.40	30.8	30.8	0.39	32.4	23.5	0.33
	66	30.7	30.7	0.40	30.7	30.7	0.40	30.7	30.7	0.40	30.7	30.7	0.40	30.7	30.7	0.40	30.7	30.7	0.39	32.4	23.5	0.34
	70	30.7	30.7	0.44	30.7	30.7	0.44	30.7	30.7	0.44	30.7	30.7	0.44	30.7	30.7	0.44	30.7	30.7	0.43	32.3	23.6	0.39
	72	30.4	30.4	0.49	30.4	30.4	0.49	30.4	30.4	0.49	30.5	30.5	0.49	30.4	30.4	0.49	30.5	30.5	0.49	32.0	23.6	0.43
	75	30.1	30.1	0.56	30.1	30.1	0.56	30.1	30.1	0.56	30.1	30.1	0.56	30.1	30.1	0.56	30.1	30.1	0.56	31.6	23.4	0.51
	79	29.6	29.6	0.65	29.6	29.6	0.65	29.6	29.6	0.65	29.6	29.6	0.65	29.6	29.6	0.65	29.6	29.6	0.65	31.0	23.3	0.60
	83	29.1	29.1	0.74	29.1	29.1	0.74	29.1	29.1	0.74	29.1	29.1	0.74	29.1	29.1	0.74	29.1	29.1	0.74	30.4	23.1	0.70
	87	28.6	28.6	0.83	28.6	28.6	0.83	28.6	28.6	0.83	28.6	28.6	0.83	28.6	28.6	0.83	28.6	28.6	0.83	29.9	22.9	0.79
	91	28.1	28.1	0.93	28.1	28.1	0.93	28.1	28.1	0.93	28.1	28.1	0.93	28.1	28.1	0.93	28.1	28.1	0.93	29.3	22.7	0.89
	93	27.8	27.8	0.97	27.8	27.8	0.97	27.8	27.8	0.97	27.8	27.8	0.97	27.8	27.8	0.97	27.8	27.8	0.97	29.0	22.6	0.94
	95	27.6	27.6	1.02	27.6	27.6	1.02	27.6	27.6	1.02	27.6	27.6	1.02	27.6	27.6	1.02	27.6	27.6	1.02	28.7	22.5	0.99
	99	27.1	27.1	1.11	27.1	27.1	1.11	27.1	27.1	1.11	27.1	27.1	1.11	27.1	27.1	1.11	27.1	27.1	1.11	28.1	22.2	1.08
	103	26.6	26.6	1.21	26.6	26.6	1.21	26.6	26.6	1.21	26.6	26.6	1.21	26.6	26.6	1.21	26.6	26.6	1.21	27.6	22.0	1.18
	106	26.2	26.2	1.27	26.2	26.2	1.27	26.2	26.2	1.27	26.2	26.2	1.27	26.2	26.2	1.27	26.2	26.2	1.27	27.1	21.8	1.25
	110	25.7	25.7	1.37	25.7	25.7	1.37	25.7	25.7	1.37	25.7	25.7	1.37	25.7	25.7	1.37	25.7	25.7	1.37	26.6	21.6	1.35
	115	25.1	25.1	1.48	25.1	25.1	1.48	25.1	25.1	1.48	25.1	25.1	1.48	25.1	25.1	1.48	25.1	25.1	1.48	25.8	21.3	1.47
	118	24.7	24.7	1.55	24.7	24.7	1.55	24.7	24.7	1.55	24.7	24.7	1.55	24.7	24.7	1.55	24.7	24.7	1.55	25.4	21.1	1.54
	122	24.2	24.2	1.65	24.2	24.2	1.65	24.2	24.2	1.65	24.2	24.2	1.65	24.2	24.2	1.65	24.2	24.2	1.65	24.8	20.8	1.64

TC: Evaporator Total Capacity (1,000 BTU/h) Net TC = TC - Blower input

SC: Evaporator Sensible Capacity(1,000 BTU/h) Net SC = SC - Blower input

PI: Power input(kW) Compressor + outdoor fan System PI = PI + Blower input

Note: TC and SC represent the evaporator's heat load and do not account for the blower input. To calculate the net capacity, subtract the blower input from each value.

is shown as reference data

The blank areas indicate that operation at this compressor speed is not possible under those conditions.

ID DB		85																				
ID WB		57			61			64			67			70			72			75		
ID CFM	OD DB	TC	SC	PI	TC	SC	PI	TC	SC	PI	TC	SC	PI	TC	SC	PI	TC	SC	PI	TC	SC	PI
3200 CFM	23	33.2	33.2	0.38	33.2	33.2	0.38	33.2	33.2	0.38	33.2	33.2	0.38	33.2	33.2	0.38	33.2	33.2	0.37	33.6	29.4	0.33
	30	33.1	33.1	0.38	33.1	33.1	0.38	33.1	33.1	0.38	33.1	33.1	0.38	33.1	33.1	0.38	33.1	33.1	0.37	33.5	29.3	0.33
	40	33.0	33.0	0.38	33.0	33.0	0.38	33.0	33.0	0.38	33.0	33.0	0.38	33.0	33.0	0.38	33.0	33.0	0.37	33.4	29.2	0.33
	50	32.9	32.9	0.38	32.9	32.9	0.38	32.9	32.9	0.38	32.9	32.9	0.38	32.9	32.9	0.38	32.9	32.9	0.37	33.3	29.0	0.33
	54	32.8	32.8	0.38	32.8	32.8	0.38	32.8	32.8	0.38	32.8	32.8	0.38	32.8	32.8	0.38	32.8	32.8	0.37	33.2	29.0	0.33
	58	32.8	32.8	0.38	32.8	32.8	0.38	32.8	32.8	0.38	32.8	32.8	0.38	32.8	32.8	0.38	32.8	32.8	0.37	33.2	29.0	0.33
	62	32.7	32.7	0.38	32.7	32.7	0.38	32.7	32.7	0.38	32.7	32.7	0.38	32.7	32.7	0.38	32.7	32.7	0.37	33.1	28.9	0.33
	66	32.7	32.7	0.38	32.7	32.7	0.38	32.7	32.7	0.38	32.7	32.7	0.38	32.7	32.7	0.38	32.7	32.7	0.37	33.1	28.9	0.33
	70	32.6	32.6	0.42	32.6	32.6	0.42	32.6	32.6	0.42	32.6	32.6	0.42	32.6	32.6	0.42	32.6	32.6	0.41	33.0	29.1	0.38
	72	32.4	32.4	0.46	32.4	32.4	0.46	32.4	32.4	0.46	32.4	32.4	0.46	32.4	32.4	0.46	32.4	32.4	0.46	32.7	29.0	0.43
	75	32.0	32.0	0.53	32.0	32.0	0.53	32.0	32.0	0.53	32.0	32.0	0.53	32.0	32.0	0.53	32.0	32.0	0.53	32.2	28.8	0.50
	79	31.4	31.4	0.62	31.4	31.4	0.62	31.4	31.4	0.62	31.4	31.4	0.62	31.4	31.4	0.62	31.5	31.5	0.62	31.7	28.6	0.59
	83	30.9	30.9	0.71	30.9	30.9	0.71	30.9	30.9	0.71	30.9	30.9	0.71	30.9	30.9	0.71	30.9	30.9	0.71	31.1	28.4	0.69
	87	30.4	30.4	0.79	30.4	30.4	0.79	30.4	30.4	0.79	30.4	30.4	0.79	30.4	30.4	0.79	30.4	30.4	0.79	30.5	28.1	0.78
	91	29.8	29.8	0.88	29.9	29.9	0.88	29.9	29.9	0.88	29.9	29.9	0.88	29.8	29.8	0.88	29.9	29.9	0.88	29.9	27.9	0.88
	93	29.6	29.6	0.93	29.6	29.6	0.93	29.6	29.6	0.93	29.6	29.6	0.93	29.6	29.6	0.93	29.6	29.6	0.93	29.6	29.6	0.92
	95	29.3	29.3	0.97	29.3	29.3	0.97	29.3	29.3	0.97	29.3	29.3	0.97	29.3	29.3	0.97	29.3	29.3	0.97	29.3	29.3	0.97
	99	28.8	28.8	1.06	28.8	28.8	1.06	28.8	28.8	1.06	28.8	28.8	1.06	28.8	28.8	1.06	28.8	28.8	1.06	28.7	28.7	1.06
	103	28.3	28.3	1.15	28.3	28.3	1.15	28.3	28.3	1.15	28.3	28.3	1.15	28.3	28.3	1.15	28.3	28.3	1.15	28.1	28.1	1.16
	106	27.9	27.9	1.21	27.9	27.9	1.21	27.9	27.9	1.21	27.9	27.9	1.21	27.9	27.9	1.21	27.9	27.9	1.21	27.7	27.7	1.23
	110	27.3	27.3	1.30	27.3	27.3	1.30	27.3	27.3	1.30	27.3	27.3	1.30	27.3	27.3	1.30	27.3	27.3	1.30	27.1	27.1	1.32
	115	26.7	26.7	1.41	26.7	26.7	1.41	26.7	26.7	1.41	26.7	26.7	1.41	26.7	26.7	1.41	26.7	26.7	1.41	26.4	26.4	1.44
	118	26.3	26.3	1.48	26.3	26.3	1.48	26.3	26.3	1.48	26.3	26.3	1.48	26.3	26.3	1.48	26.3	26.3	1.48	25.9	25.9	1.51
	122	25.7	25.7	1.57	25.7	25.7	1.57	25.7	25.7	1.57	25.7	25.7	1.57	25.7	25.7	1.57	25.7	25.7	1.57	25.3	25.3	1.61
3600 CFM	23	33.4	33.4	0.38	33.4	33.4	0.38	33.4	33.4	0.38	33.4	33.4	0.38	33.4	33.4	0.38	33.4	33.4	0.37	33.8	31.5	0.32
	30	33.3	33.3	0.38	33.3	33.3	0.38	33.3	33.3	0.38	33.3	33.3	0.38	33.3	33.3	0.38	33.3	33.3	0.37	33.7	31.4	0.32
	40	33.2	33.2	0.38	33.2	33.2	0.38	33.2	33.2	0.38	33.2	33.2	0.38	33.2	33.2	0.38	33.2	33.2	0.37	33.6	31.3	0.32
	50	33.1	33.1	0.38	33.1	33.1	0.38	33.1	33.1	0.38	33.1	33.1	0.38	33.0	33.0	0.38	33.1	33.1	0.37	33.5	31.2	0.33
	54	33.0	33.0	0.38	33.0	33.0	0.38	33.0	33.0	0.38	33.0	33.0	0.38	33.0	33.0	0.38	33.0	33.0	0.37	33.4	31.1	0.33
	58	33.0	33.0	0.38	33.0	33.0	0.38	33.0	33.0	0.38	33.0	33.0	0.38	33.0	33.0	0.38	33.0	33.0	0.37	33.4	31.1	0.33
	62	32.9	32.9	0.38	32.9	32.9	0.38	32.9	32.9	0.38	32.9	32.9	0.38	32.9	32.9	0.38	32.9	32.9	0.37	33.3	31.0	0.33
	66	32.9	32.9	0.38	32.9	32.9	0.38	32.9	32.9	0.38	32.9	32.9	0.38	32.9	32.9	0.38	32.9	32.9	0.37	33.3	31.0	0.33
	70	32.8	32.8	0.42	32.8	32.8	0.42	32.8	32.8	0.42	32.8	32.8	0.42	32.8	32.8	0.42	32.8	32.8	0.41	33.2	31.2	0.38
	72	32.6	32.6	0.46	32.6	32.6	0.46	32.6	32.6	0.46	32.6	32.6	0.46	32.6	32.6	0.46	32.6	32.6	0.46	32.9	31.1	0.42
	75	32.2	32.2	0.53	32.2	32.2	0.53	32.2	32.2	0.53	32.2	32.2	0.53	32.2	32.2	0.53	32.2	32.2	0.53	32.4	30.9	0.49
	79	31.6	31.6	0.61	31.6	31.6	0.61	31.6	31.6	0.61	31.6	31.6	0.61	31.6	31.6	0.61	31.6	31.6	0.61	31.8	30.7	0.59
	83	31.1	31.1	0.70	31.1	31.1	0.70	31.1	31.1	0.70	31.1	31.1	0.70	31.1	31.1	0.70	31.1	31.1	0.70	31.2	30.4	0.68
	87	30.6	30.6	0.79	30.6	30.6	0.79	30.6	30.6	0.79	30.6	30.6	0.79	30.6	30.6	0.79	30.6	30.6	0.79	30.7	30.2	0.78
	91	30.0	30.0	0.88	30.0	30.0	0.88	30.0	30.0	0.88	30.0	30.0	0.88	30.0	30.0	0.88	30.0	30.0	0.88	30.1	29.9	0.87
	93	29.8	29.8	0.92	29.8	29.8	0.92	29.8	29.8	0.92	29.8	29.8	0.92	29.8	29.8	0.92	29.8	29.8	0.92	29.8	29.8	0.92
	95	29.5	29.5	0.96	29.5	29.5	0.96	29.5	29.5	0.96	29.5	29.5	0.96	29.5	29.5	0.96	29.5	29.5	0.96	29.5	29.5	0.96
	99	29.0	29.0	1.05	29.0	29.0	1.05	29.0	29.0	1.05	29.0	29.0	1.05	29.0	29.0	1.05	29.0	29.0	1.05	28.9	28.9	1.06
	103	28.4	28.4	1.14	28.4	28.4	1.14	28.4	28.4	1.14	28.4	28.4	1.14	28.4	28.4	1.14	28.4	28.4	1.14	28.3	28.3	1.15
	106	28.0	28.0	1.21	28.0	28.0	1.21	28.0	28.0	1.21	28.0	28.0	1.21	28.0	28.0	1.21	28.0	28.0	1.21	27.8	27.8	1.22
	110	27.5	27.5	1.29	27.5	27.5	1.29	27.5	27.5	1.29	27.5	27.5	1.29	27.5	27.5	1.29	27.5	27.5	1.29	27.3	27.3	1.32
	115	26.8	26.8	1.40	26.8	26.8	1.40	26.8	26.8	1.40	26.8	26.8	1.40	26.8	26.8	1.40	26.8	26.8	1.40	26.5	26.5	1.44
	118	26.4	26.4	1.47	26.4	26.4	1.47	26.4	26.4	1.47	26.4	26.4	1.47	26.4	26.4	1.47	26.4	26.4	1.47	26.1	26.1	1.51
	122	25.9	25.9	1.56	25.9	25.9	1.56	25.9	25.9	1.56	25.9	25.9	1.56	25.9	25.9	1.56	25.9	25.9	1.56	25.5	25.5	1.60
4000 CFM	23	33.6	33.6	0.37	33.6	33.6	0.37	33.6	33.6	0.37	33.6	33.6	0.37	33.5	33.5	0.37	33.6	33.6	0.37	34.0	33.6	0.32
	30	33.5	33.5	0.37	33.5	33.5	0.37	33.5	33.5	0.37	33.5	33.5	0.37	33.5	33.5	0.37	33.5	33.5	0.37	33.9	33.5	0.32
	40	33.3	33.3	0.37	33.3	33.3	0.37	33.3	33.3	0.37	33.3	33.3	0.37	33.3	33.3	0.37	33.4	33.4	0.37	33.8	33.4	0.32
	50	33.2	33.2	0.37	33.2	33.2	0.37	33.2	33.2	0.37	33.2	33.2	0.37	33.2	33.2	0.37	33.2	33.2	0.37	33.6	33.2	0.32
	54	33.2	33.2	0.37	33.2	33.2	0.37	33.2	33.2	0.37	33.2	33.2	0.37	33.2	33.2	0.37	33.2	33.2	0.37	33.6	33.2	0.32
	58	33.1	33.1	0.37	33.1	33.1	0.37	33.1	33.1	0.37	33.1	33.1	0.37	33.1	33.1	0.37	33.1	33.1	0.37	33.5	33.1	0.33
	62	33.1	33.1	0.37	33.1	33.1	0.37	33.1	33.1	0.37	33.1	33.1	0.37	33.1	33.1	0.37	33.1	33.1	0.37	33.5	33.1	0.33
	66	33.0	33.0	0.37	33.0	33.0	0.37	33.0	33.0	0.37	33.0	33.0	0.37	33.0	33.0	0.37	33.0	33.0	0.37	33.4	33.0	0.33
	70	33.0	33.0	0.41	33.0	33.0	0.41	33.0	33.0	0.41	33.0	33.0	0.41	33.0	33.0	0.41	33.0	33.0	0.41	33.3	33.2	0.38
	72	32.7	32.7	0.46	32.7	32.7	0.46	32.7	32.7	0.46	32.7	32.7	0.46	32.7	32.7	0.46	32.7	32.7	0.46	33.0	33.1	0.42
	75	32.3	32.3	0.52	32.3	32.3	0.52	32.3	32.3	0.52	32.3	32.3	0.52	32.3	32.3	0.52	32.3	32.3	0.52	32.6	33.0	0.49
	79	31.8	31.8	0.61	31.8	31.8	0.61	31.8	31.8	0.61	31.8	31.8	0.61	31.8	31.8	0.61	31.8	31.8	0.61	32.0	32.7	0.59
	83	31.3	31.3	0.70	31.3	31.3	0.70	31.3	31.3	0.70	31.3	31.3	0.70	31.3	31.3	0.70	31.3	31.3	0.70	31.4	32.4	0.68
	87	30.7	30.7	0.79	30.7	30.7	0.79	30.7	30.7	0.79	30.7	30.7	0.79	30.7	30.7	0.79	30.7	30.7	0.79	30.8	32.2	0.77
	91	30.2	30.2	0.87	30.2	30.2	0.87	30.2	30.2	0.87	30.2	30.2	0.87	30.2	30.2	0.87	30.2	30.2	0.87	30.2	31.9	0.87
	93	29.9	29.9	0.92	29.9	29.9	0.92	29.9	29.9	0.92	29.9	29.9	0.92	29.9	29.9	0.92	29.9	29.9	0.92	29.9	29.9	0.91
	95	29.6	29.6	0.96	29.6	29.6	0.96	29.6	29.6	0.96	29.7	29.7	0.96	29.6	29.6	0.96	29.7	29.7	0.96	29.6	29.6	0.96
	99	29.1	29.1	1.05	29.1	29.1	1.05	29.1	29.1	1.05	29.1	29.1	1.05	29.1	29.1	1.05	29.1	29.1	1.05	29.0	29.0	1.05
	103	28.6	28.6	1.14	28.6	28.6	1.14	28.6	28.6	1.14	28.6	28.6	1.14	28.6	28.6	1.14	28.6	28.6	1.14	28.4	28.4	1.15
	106	28.2	28.2	1.20	28.2	28.2	1.20	28.2	28.2	1.20	28.2	28.2	1.20	28.2	28.2	1.20	28.2	28.2	1.20	28.0	28.0	1.22
	110	27.6	27.6	1.29	27.6	27.6	1.29	27.6	27.6	1.29	27.6	27.6	1.29	27.6	27.6	1.29	27.6	27.6	1.29	27.4	27.4	1.31
	115	27.0	27.0	1.40	27.0	27.0	1.40	27.0	27.0	1.40	27.0	27.0	1.40	27.0	27.0	1.40	27.0	27.0	1.40	26.7	26.7	1.43
	118	26.6	26.6	1.46	26.6	26.6	1.46	26.6	26.6	1.46	26.6	26.6	1.46	26.6	26.6	1.46	26.6	26.6	1.46	26.2	26.2	1.50
	122	26.0	26.0	1.55	26.0	26.0	1.55	26.0	26.0	1.55	26.0	26.0	1.55	26.0	26.0	1.55	26.0	26.0	1.55	25.6	25.6	1.59

TC: Evaporator Total Capacity (1,000 BTU/h) Net TC = TC - Blower input

SC: Evaporator Sensible Capacity(1,000 BTU/h) Net SC = SC - Blower input

PI: Power input(kW) Compressor + outdoor fan System PI = PI + Blower input

Note: TC and SC represent the evaporator's heat load and do not account for the blower input. To calculate the net capacity, subtract the blower input from each value.

is shown as reference data

The blank areas indicate that operation at this compressor speed is not possible under those conditions.

ID DB		70												75																	
ID WB		57			61			64			67			57			61			64			67			70			72		
ID CFM	OD DB	TC	SC	PI	TC	SC	PI	TC	SC	PI	TC	SC	PI	TC	SC	PI	TC	SC	PI	TC	SC	PI	TC	SC	PI	TC	SC	PI	TC	SC	PI
	23	108.0	93.9	4.37	120.6	79.1	4.48	126.4	66.6	4.35	133.9	55.9	4.21	111.0	111.0	4.40	120.6	97.0	4.48	126.4	84.9	4.35	133.9	74.6	4.21	141.5	63.9	4.06	146.6	55.7	3.96
	30	107.8	93.7	4.40	120.4	78.9	4.54	126.1	66.5	4.41	133.6	55.8	4.27	110.8	110.8	4.43	120.4	96.8	4.54	126.1	84.8	4.41	133.6	74.4	4.27	141.2	63.7	4.12	146.2	55.6	4.02
	40	107.5	93.4	4.45	120.0	78.7	4.63	125.7	66.3	4.50	133.2	55.6	4.36	110.4	110.4	4.48	120.0	96.5	4.63	125.7	84.5	4.50	133.2	74.2	4.36	140.7	63.5	4.20	145.8	55.4	4.10
	50	107.2	93.1	4.50	119.6	78.4	4.84	125.3	66.1	4.69	132.8	55.4	4.55	110.1	110.1	4.54	119.6	96.2	4.84	125.3	84.2	4.69	132.8	73.9	4.55	140.3	63.3	4.39	145.3	55.3	4.28
	54	107.0	93.0	4.67	119.4	78.3	4.83	125.1	66.0	4.86	132.6	55.3	4.89	110.0	110.0	4.70	119.4	96.1	4.83	125.1	84.1	4.86	132.6	73.8	4.89	140.1	63.2	4.93	145.1	55.2	4.95
	58	106.9	92.9	5.00	119.3	78.2	5.17	125.0	65.9	5.21	132.4	55.3	5.24	109.8	109.8	5.03	119.3	96.0	5.17	125.0	84.0	5.21	132.4	73.7	5.24	139.9	63.2	5.27	144.9	55.1	5.30
	62	106.4	92.4	5.33	118.8	78.1	5.51	124.4	65.8	5.55	131.9	55.2	5.59	109.3	109.3	5.37	118.8	95.9	5.51	124.4	83.9	5.55	131.9	73.7	5.59	139.3	63.1	5.62	144.3	55.1	5.65
	66	105.0	91.5	5.66	116.9	77.5	5.86	122.5	65.3	5.89	129.8	54.8	5.93	107.9	107.9	5.70	116.9	95.1	5.86	122.5	83.3	5.89	129.8	73.1	5.93	137.2	62.6	5.97	142.1	54.6	6.00
	70	103.7	90.6	5.99	115.1	76.9	6.20	120.5	64.8	6.24	127.7	54.3	6.28	106.5	106.5	6.04	115.1	94.3	6.20	120.5	82.6	6.24	127.7	72.5	6.28	135.0	62.1	6.32	139.8	54.2	6.34
	72	103.0	90.2	6.16	114.1	76.5	6.37	119.6	64.5	6.41	126.7	54.1	6.45	105.8	105.8	6.20	114.1	93.9	6.37	119.6	82.2	6.41	126.7	72.2	6.45	133.9	61.8	6.49	138.7	53.9	6.52
	75	102.0	89.5	6.41	112.8	76.0	6.63	118.1	64.1	6.67	125.2	53.7	6.71	104.8	104.8	6.45	112.8	93.3	6.63	118.1	81.7	6.67	125.2	71.7	6.71	132.3	61.4	6.75	137.0	53.6	6.78
3200	79	100.6	88.6	6.74	110.9	75.4	6.97	116.2	63.5	7.01	123.1	53.2	7.06	103.4	103.4	6.79	110.9	92.5	6.97	116.2	80.9	7.01	123.1	71.1	7.06	130.1	60.9	7.10	134.7	53.1	7.13
CFM	83	99.2	87.7	7.07	109.0	74.7	7.31	114.2	62.9	7.36	121.0	52.8	7.40	102.0	102.0	7.12	109.0	91.6	7.31	114.2	80.2	7.36	121.0	70.4	7.40	127.9	60.3	7.45	132.5	52.6	7.48
	87	97.9	86.8	7.40	107.2	73.9	7.65	112.3	62.3	7.70	119.0	52.2	7.75	100.6	100.6	7.45	107.2	90.7	7.65	112.3	79.4	7.70	119.0	69.7	7.75	125.7	59.7	7.80	130.2	52.1	7.83
	91	96.5	85.9	7.73	105.3	73.2	8.00	110.3	61.7	8.05	116.9	51.7	8.09	99.2	99.2	7.79	105.3	89.8	8.00	110.3	78.6	8.05	116.9	69.0	8.09	123.6	59.1	8.14	128.0	51.6	8.18
	93	95.8	85.5	7.89	104.4	72.8	8.17	109.4	61.4	8.22	115.9	51.5	8.27	98.5	98.5	7.95	104.4	89.4	8.17	109.4	78.2	8.22	115.9	68.7	8.27	122.5	58.8	8.32	126.8	51.3	8.35
	95	95.2	85.0	8.06	103.5	72.3	8.34	108.4	61.0	8.39	114.9	51.2	8.44	97.8	97.8	8.12	103.5	88.8	8.34	108.4	77.8	8.39	114.9	68.3	8.44	121.4	58.5	8.49	125.7	51.1	8.53
	99	93.8	84.1	8.39	101.6	71.3	8.68	106.4	60.4	8.73	112.8	50.6	8.79	96.4	96.4	8.45	101.6	87.5	8.68	106.4	77.0	8.73	112.8	67.6	8.79	119.2	57.9	8.84	123.5	50.5	8.88
	103	92.4	83.1	8.72	99.8	70.2	9.02	104.5	59.7	9.08	110.7	50.1	9.13	95.0	95.0	8.79	99.8	86.2	9.02	104.5	76.1	9.08	110.7	66.8	9.13	117.0	57.2	9.19	121.2	49.9	9.23
	106	91.4	82.4	8.97	98.4	69.4	9.28	103.0	59.2	9.34	109.2	49.6	9.39	93.9	93.9	9.04	98.4	85.2	9.28	103.0	75.5	9.34	109.2	66.2	9.39	115.4	56.7	9.45	119.5	49.5	9.49
	110	90.1	81.5	9.30	96.5	68.3	9.62	101.1	58.5	9.68	107.1	49.1	9.74	92.5	92.5	9.37	96.5	83.9	9.62	101.1	74.6	9.68	107.1	65.5	9.74	113.2	56.1	9.80	117.3	48.9	9.84
	115	88.3	80.3	9.72	94.2	67.0	10.05	98.7	57.6	10.11	104.6	48.3	10.17	90.8	90.8	9.79	94.2	82.2	10.05	98.7	73.4	10.11	104.6	64.5	10.17	110.5	55.2	10.23	114.4	48.2	10.27
	118																														
	122																														
	23	110.3	97.2	4.37	123.2	81.9	4.48	129.1	69.0	4.35	136.8	57.9	4.21	113.4	113.4	4.40	123.2	100.5	4.48	129.1	88.0	4.35	136.8	77.2	4.21	144.5	66.1	4.06	149.7	57.7	3.97
	30	110.1	97.0	4.41	122.9	81.7	4.55	128.8	68.9	4.41	136.5	57.7	4.28	113.1	113.1	4.44	122.9	100.3	4.55	128.8	87.8	4.41	136.5	77.1	4.28	144.2	66.0	4.12	149.3	57.6	4.03
	40	109.8	96.7	4.46	122.5	81.5	4.64	128.4	68.7	4.50	136.0	57.6	4.36	112.8	112.8	4.49	122.5	100.0	4.64	128.4	87.5	4.50	136.0	76.8	4.36	143.7	65.8	4.21	148.9	57.4	4.11
	50	109.5	96.4	4.51	122.1	81.2	4.84	128.0	68.4	4.70	135.6	57.4	4.55	112.4	112.4	4.54	122.1	99.6	4.84	128.0	87.2	4.70	135.6	76.6	4.55	143.3	65.6	4.39	148.4	57.2	4.29
	54	109.3	96.3	4.67	122.0	81.1	4.84	127.8	68.3	4.87	135.4	57.3	4.90	112.3	112.3	4.71	122.0	99.5	4.84	127.8	87.1	4.87	135.4	76.5	4.90	143.1	65.5	4.93	148.2	57.2	4.95
	58	109.2	96.2	5.00	121.8	81.0	5.18	127.6	68.3	5.21	135.3	57.2	5.25	112.2	112.2	5.04	121.8	99.4	5.18	127.6	87.0	5.21	135.3	76.4	5.25	142.9	65.4	5.28	148.0	57.1	5.30
	62	108.7	95.7	5.34	121.3	80.9	5.52	127.1	68.2	5.56	134.7	57.2	5.59	111.6	111.6	5.37	121.3	99.3	5.52	127.1	86.9	5.56	134.7	76.3	5.59	142.3	65.3	5.63	147.4	57.0	5.65
	66	107.3	94.8	5.67	119.4	80.3	5.86	125.1	67.6	5.90	132.6	56.7	5.94	110.2	110.2	5.71	119.4	98.5	5.86	125.1	86.2	5.90	132.6	75.7	5.94	140.1	64.8	5.98	145.1	56.6	6.00
	70	105.9	93.9	6.00	117.5	79.6	6.21	123.1	67.1	6.25	130.5	56.3	6.29	108.8	108.8	6.04	117.5	97.7	6.21	123.1	85.5	6.25	130.5	75.1	6.29	137.9	64.3	6.33	142.8	56.1	6.35
	72	105.2	93.4	6.16	116.6	79.3	6.38	122.1	66.8	6.42	129.4	56.0	6.46	108.1	108.1	6.21	116.6	97.3	6.38	122.1	85.2	6.42	129.4	74.7	6.46	136.8	64.0	6.50	141.6	55.9	6.53
	75	104.1	92.7	6.41	115.2	78.8	6.63	120.6	66.4	6.68	127.8	55.6	6.72	107.0	107.0	6.46	115.2	96.6	6.63	120.6	84.6	6.68	127.8	74.3	6.72	135.1	63.6	6.76	139.9	55.5	6.79
3600	79	102.8	91.8	6.74	113.3	78.1	6.98	118.6	65.8	7.02	125.7	55.1	7.07	105.6	105.6	6.79	113.3	95.8	6.98	118.6	83.8	7.02	125.7	73.6	7.07	132.9	63.0	7.11	137.6	55.0	7.14
CFM	83	101.4	90.9	7.08	111.4	77.3	7.32	116.7	65.2	7.37	123.6	54.6	7.41	104.1	104.1	7.13	111.4	94.9	7.32	116.7	83.1	7.37	123.6	72.9	7.41	130.6	62.4	7.46	135.3	54.5	7.49
	87	100.0	89.9	7.41	109.5	76.6	7.66	114.7	64.5	7.71	121.5	54.1	7.76	102.7	102.7	7.46	109.5	94.0	7.66	114.7	82.3	7.71	121.5	72.2	7.76	128.4	61.8	7.81	133.0	54.0	7.84
	91	98.6	89.0	7.74	107.6	75.8	8.00	112.7	63.9	8.05	119.4	53.6	8.10	101.3	101.3	7.80	107.6	93.0	8.00	112.7	81.4	8.05	119.4	71.5	8.10	126.2	61.2	8.15	130.7	53.4	8.19
	93	97.9	88.5	7.90	106.6	75.4	8.18	111.7	63.6	8.23	118.4	53.3	8.28	100.6	100.6	7.96	106.6	92.5	8.18	111.7	81.0	8.23	118.4	71.1	8.28	125.1	60.9	8.33	129.5	53.2	8.36
	95	97.2	88.0	8.07	105.7	74.9	8.35	110.7	63.2	8.40	117.3	53.0	8.45	99.8	99.8	8.13	105.7	91.9	8.35	110.7	80.6	8.40	117.3	70.7	8.45	124.0	60.6	8.50	128.4	52.9	8.54
	99	95.8	87.1	8.40	103.8	73.8	8.69	108.7	62.5	8.74	115.2	52.4	8.80	98.4	98.4	8.46	103.8	90.6	8.69	108.7	79.7	8.74	115.2	70.0	8.80	121.7	59.9	8.85	126.1	52.3	8.89
	103	94.4	86.1	8.73	101.9	72.7	9.03	106.7	61.9	9.09	113.1	51.9	9.14	97.0	97.0	8.80	101.9	89.2	9.03	106.7	78.8	9.09	113.1	69.2	9.14	119.5	59.3	9.20	123.8	51.7	9.24
	106	93.4	85.4	8.98	100.5	71.9	9.29	105.2	61.3	9.35	111.5	51.4	9.40	95.9	95.9	9.05	100.5	88.2	9.29	105.2	78.2	9.35	111.5	68.6	9.40	117.8	58.8	9.46	122.1	51.3	9.50
	110	92.0	84.4	9.31	98.6	70.8	9.63	103.2	60.6	9.69	109.4	50.8	9.75	94.5	94.5	9.38	98.6	86.8	9.63	103.2	77.2	9.69	109.4	67.8	9.75	115.6	58.1	9.81	119.7	50.7	9.85
	115	90.2	83.1	9.73	96.2	69.4	10.06	100.8	59.7	10.12	106.8	50.0	10.18	92.7	92.7	9.80	96.2	85.1	10.06	100.8	76.1	10.12	106.8	66.8	10.18	112.8	57.2	10.24	116.9	49.9	10.28
	118																														
	122																														
	23	112.3	100.9	4.38	125.4	85.0	4.48	131.4	71.6	4.35	139.2	60.1	4.22	115.4	115.4	4.41	125.4	104.3	4.48	131.4	91.3	4.35	139.2	80.1	4.22	147.1	68.6	4.07	152.3	59.9	3.97
	30	112.1	100.7	4.41	125.1	84.8	4.55	131.1	71.5	4.42	138.9	59.9	4.28	115.1	115.1	4.44	125.1	104.1	4.55	131.1	91.1	4.42	138.9	80.0	4.28	146.8	68.5	4.13	152.0	59.8	4.03
	40	111.7	100.4	4.46	124.7	84.5	4.64	130.7	71.2	4.51	138.5	59.7	4.37	114.8	114.8	4.49	124.7	103.7	4.64	130.7	90.8	4.51	138.5	79.7	4.37	146.3	68.3	4.21	151.5	59.6	4.11
	50	111.4	100.1	4.51	124.3	84.3	4.85	130.2	71.0	4.70	138.0	59.5	4.56	114.5	114.5	4.54	124.3	103.4	4.85	130.2	90.5	4.70	138.0	79.5	4.56	145.8	68.1	4.39	151.0	59.4	4.29
	54	111.3	99.9	4.68	124.2	84.2	4.84	130.1	70.9	4.87	137.8	59.5	4.90	114.3	114.3	4.71	124.2	103.3	4.84	130.1	90.4	4.87	137.8	79.4	4.90	145.7	68.0	4.94	150.9	59.3	4.96
	58	111.1	99.8	5.01	124.0	84.1	5.18	129.9	70.8	5.22	137.7	59.4	5.25	114.2	114.2	5.05	124.0	103.1	5.18	129.9	90.3	5.22	137.7	79.3	5.25	145.5	67.9	5.29	150.7	59.2	5.31
	62	110.6	99.3	5.34	123.5	84.0	5.53	129.4	70.8	5.56	137.1	59.3	5.60	113.6	113.6	5.38	123.5	103.0	5.53	129.4	90.2	5.56	137.1	79.2	5.60	144.9	67.8	5.63	150.0	59.2	5.66
	66	109.2	98.4	5.67	121.6	83.3	5.87	127.3	70.2	5.91	134.9	58.9	5.94	112.2	112.2	5.71	121.6	102.2	5.87	127.3	89.5	5.91	134.9	78.5	5.94	142.6	67.3	5.98	147.7	58.7	6.01
	70	107.8	97.4	6.00	119.6	82.6	6.21	125.3	69.6	6.25	132.8	58.4	6.29	110.7	110.7	6.05	119.6	101.4	6.21	125.3	88.7	6.25	132.8	77.9	6.29	140.3	66.7	6.33	145.3	58.2	6.36
	72	107.1	96.9	6.17	118.7	82.3	6.38	124.3	69.3	6.42	131.7	58.1	6.46	110.0	110.0	6.21	118.7	100.9	6.38	124.3	88.4	6.42	131.7	77.6	6.46	139.2	66.4	6.51	144.2	58.0	6.53
	75	106.0	96.2	6.42	117.2	81.7	6.64	122.8	68.9	6.68	130.1	57.7	6.72	108.9	108.9	6.47	117.2	100.3	6.64	122.8	87.8	6.68	130.1	77.1	6.72	137.5	66.0	6.77	142.4	57.6	6.80
4000	79	104.6	95.3	6.75	115.3	81.0	6.98	120.8	68.3	7.03	128.0	57.2	7.07	107.4	107.4	6.80	115.3	99.4	6.98	120.8	87.0	7.03	128.0	76.4	7.07	135.2	65.4	7.12	140.1	57.1	7.14
CFM	83	103.2	94.3	7.08	113.4	80.2	7.33	118.7	67.6	7.37	125.8	56.7	7.42	106.0	106.0	7.13	113.4	98.5	7.33	118.7	86.2	7.37	125.8	75.7	7.42	133.0	64.8	7.46	137.7	56.6	7.49
	87	101.8	93.3	7.41	111.4	79.5	7.67	116.7	67.0	7.72	123.7	56.1	7.76	104.5	104.5	7.47	111.4	97.5	7.67	116.7	85.4	7.72	123.7	74.9	7.76	130.7	64.2	7.81	135.4	56.0	7.84
	91	100.3	92.3	7.75	109.5	78.7	8.01	114.7	66.3	8.06	121.5	55.6	8.11	103.1	103.1	7.80	109.5	96.5	8.01	114.7	84.5	8.06	121.5	74.2	8.11	128.4	63.5	8.16	133.0	55.5	8.19
	93	99.6	91.9	7.91	108.5	78.3	8.18	113.7	66.0	8.23	120.5	55.3	8.28	102.4	102.4	7.97	108.5	96.0	8.18	113.7	84.1	8.23	120.5	73.8	8.28	127.3	63.2	8.34	131.9	55.2	8.37
	95	98.9	91.4	8.08	107.6	77.8	8.35	112.7	65.6	8.41	119.4	55.0	8.46	101.6	101.6	8.14	107.6	95.4	8.35	112.7	83.6	8.41	119.4	73.4	8.46	126.2	62.9	8.51	130.7	54.9	8.54
	99	97.5	90.4	8.41	105.6	76.6	8.70	110.7	64.9	8.75	117.3	54.4	8.80	100.2	100.2	8.47	105.6	94.0	8.70	110.7	82.7	8.75	117.3	72.6	8.80	123.9	62.2	8.86	128.3	54.3	8.89
	103	96.1	89.3	8.74	103.7	75.5	9.04	108.6	64.2	9.10	115.1	53.8	9.15	98.7	98.7	8.80	103.7	92.6	9.04	108.6	81.8	9.10	115.1	71.8	9.15	121.6	61.5	9.21	126.0	53.7	9.24
	106	95.0	88.6	8.99	102.3	74.6	9.30	107.1	63.6	9.35	113.5	53.4	9.41	97.6	97.6	9.06	102.3	91.5	9.30	107.1	81.1	9.35	113.5	71.2	9.41	120.0	61.0	9.47	124.2	53.2	9.51
	110	93.6	87.6	9.32	100.3	73.5	9.64	105.1	62.9	9.70	111.4	52.7	9.76	96.2	96.2	9.39	100.3	90.1	9.64	105.1	80.2	9.70	111.4	70.4	9.76	117.7	60.3	9.82	121.9	52.6	9.86
	115	91.8	86.3	9.74	97.9	72.0	10.07	102.6	61.9	10.13	108.7	51.9	10.19	94.4	94.4	9.81	97.9	88.3	10.07	102.6	78.9	10.13	108.7	69.3	10.19	114.9	59.3	10.25	119.0	51.8	10.29
	118																														
	122																														

TC: Evaporator Total Capacity (1,000 BTU/h) Net TC = TC - Blower input

SC: Evaporator Sensible Capacity(1,000 BTU/h) Net SC = SC - Blower input

PI: Power input(kW) Compressor + outdoor fan System PI = PI + Blower input

Note: TC and SC represent the evaporator's heat load and do not account for the blower input. To calculate the net capacity, subtract the blower input from each value.

is shown as reference data

The blank areas indicate that operation at this compressor speed is not possible under those conditions.

ID DB		80																				
ID WB		57			61			64			67			70			72			75		
ID CFM	OD DB	TC	SC	PI	TC	SC	PI	TC	SC	PI	TC	SC	PI	TC	SC	PI	TC	SC	PI	TC	SC	PI
3200 CFM	23	117.7	117.7	4.48	120.6	111.5	4.48	126.4	102.5	4.35	133.9	92.7	4.21	141.5	82.6	4.06	146.6	74.4	3.96	154.7	64.4	3.82
	30	117.5	117.5	4.52	120.4	111.3	4.54	126.1	102.2	4.41	133.6	92.5	4.27	141.2	82.4	4.12	146.2	74.3	4.02	154.6	64.4	3.87
	40	117.1	117.1	4.57	120.0	110.9	4.63	125.7	101.9	4.50	133.2	92.3	4.36	140.7	82.1	4.20	145.8	74.0	4.10	154.5	64.3	3.95
	50	116.8	116.8	4.62	119.6	110.6	4.84	125.3	101.6	4.69	132.8	92.0	4.55	140.3	81.9	4.39	145.3	73.8	4.28	154.4	64.3	4.41
	54	116.6	116.6	4.79	119.4	110.4	4.83	125.1	101.5	4.86	132.6	91.8	4.89	140.1	81.8	4.93	145.1	73.7	4.95	154.3	64.3	4.78
	58	116.5	116.5	5.13	119.3	110.3	5.17	125.0	101.3	5.21	132.4	91.7	5.24	139.9	81.7	5.27	144.9	73.6	5.30	153.3	63.8	5.15
	62	115.9	115.9	5.47	118.8	110.2	5.51	124.4	101.2	5.55	131.9	91.6	5.59	139.3	81.6	5.62	144.3	73.5	5.65	151.1	62.9	5.52
	66	114.4	114.4	5.81	116.9	109.3	5.86	122.5	100.4	5.89	129.8	90.9	5.93	137.2	80.9	5.97	142.1	72.9	6.00	148.8	62.2	5.89
	70	113.0	113.0	6.15	115.1	108.4	6.20	120.5	99.6	6.24	127.7	90.2	6.28	135.0	80.3	6.32	139.8	72.3	6.34	146.6	61.4	6.25
	72	112.2	112.2	6.32	114.1	107.9	6.37	119.6	99.2	6.41	126.7	89.8	6.45	133.9	79.9	6.49	138.7	72.0	6.52	145.5	61.1	6.44
	75	111.1	111.1	6.57	112.8	107.2	6.63	118.1	98.5	6.67	125.2	89.2	6.71	132.3	79.4	6.75	137.0	71.6	6.78	143.9	60.5	6.72
	79	109.6	109.6	6.91	110.9	106.3	6.97	116.2	97.6	7.01	123.1	88.4	7.06	130.1	78.7	7.10	134.7	70.9	7.13	141.6	59.8	7.08
	83	108.1	108.1	7.25	109.0	105.3	7.31	114.2	96.7	7.36	121.0	87.6	7.40	127.9	78.0	7.45	132.5	70.3	7.48	139.4	59.1	7.45
	87	106.7	106.7	7.59	107.2	104.3	7.65	112.3	95.8	7.70	119.0	86.7	7.75	125.7	77.2	7.80	130.2	69.6	7.83	137.2	58.3	7.82
	91	105.2	105.2	7.93	105.3	103.2	8.00	110.3	94.8	8.05	116.9	85.8	8.09	123.6	76.4	8.14	128.0	68.9	8.18	135.0	57.6	8.19
	93	104.4	104.4	8.10	104.4	102.7	8.17	109.4	94.4	8.22	115.9	85.4	8.27	122.5	76.0	8.32	126.8	68.5	8.35	133.9	57.2	8.37
	95	103.7	103.7	8.27	103.5	103.5	8.34	108.4	93.9	8.39	114.9	85.0	8.44	121.4	75.6	8.49	125.7	68.2	8.53	132.8	56.8	8.56
	99	102.2	102.2	8.61	101.6	101.6	8.68	106.4	92.9	8.73	112.8	84.0	8.79	119.2	74.8	8.84	123.5	67.4	8.88	130.5	56.1	8.93
	103	100.7	100.7	8.95	99.8	99.8	9.02	104.5	91.8	9.08	110.7	83.1	9.13	117.0	74.0	9.19	121.2	66.7	9.23	128.3	55.3	9.30
	106	99.6	99.6	9.20	98.4	98.4	9.28	103.0	91.0	9.34	109.2	82.4	9.39	115.4	73.4	9.45	119.5	66.1	9.49	126.7	54.7	9.57
	110	98.1	98.1	9.54	96.5	96.5	9.62	101.1	90.0	9.68	107.1	81.4	9.74	113.2	72.5	9.80	117.3	65.3	9.84	124.4	54.0	9.94
	115	96.3	96.3	9.97	94.2	94.2	10.05	98.7	88.6	10.11	104.6	80.2	10.17	110.5	71.4	10.23	114.4	64.3	10.27	121.7	53.0	10.40
	118																					
	122																					
3600 CFM	23	120.2	120.2	4.48	123.2	115.5	4.48	129.1	106.1	4.35	136.8	96.1	4.21	144.5	85.5	4.06	149.7	77.1	3.97	157.9	66.7	3.83
	30	120.0	120.0	4.52	122.9	115.3	4.55	128.8	105.9	4.41	136.5	95.8	4.28	144.2	85.3	4.12	149.3	76.9	4.03	157.9	66.7	3.88
	40	119.6	119.6	4.57	122.5	114.9	4.64	128.4	105.6	4.50	136.0	95.5	4.36	143.7	85.1	4.21	148.9	76.7	4.11	157.8	66.6	3.95
	50	119.3	119.3	4.62	122.1	114.5	4.84	128.0	105.2	4.70	135.6	95.2	4.55	143.3	84.8	4.39	148.4	76.4	4.29	157.7	66.6	4.42
	54	119.1	119.1	4.79	122.0	114.4	4.84	127.8	105.1	4.87	135.4	95.1	4.90	143.1	84.7	4.93	148.2	76.3	4.95	157.6	66.6	4.79
	58	119.0	119.0	5.13	121.8	114.2	5.18	127.6	105.0	5.21	135.3	95.0	5.25	142.9	84.6	5.28	148.0	76.2	5.30	156.5	66.1	5.15
	62	118.4	118.4	5.47	121.3	114.1	5.52	127.1	104.8	5.56	134.7	94.9	5.59	142.3	84.5	5.63	147.4	76.2	5.65	154.3	65.2	5.52
	66	116.9	116.9	5.81	119.4	113.2	5.86	125.1	104.0	5.90	132.6	94.1	5.94	140.1	83.8	5.98	145.1	75.6	6.00	152.0	64.4	5.89
	70	115.4	115.4	6.15	117.5	112.3	6.21	123.1	103.2	6.25	130.5	93.4	6.29	137.9	83.1	6.33	142.8	74.9	6.35	149.8	63.6	6.26
	72	114.6	114.6	6.32	116.6	111.8	6.38	122.1	102.7	6.42	129.4	93.0	6.46	136.8	82.8	6.50	141.6	74.6	6.53	148.6	63.3	6.45
	75	113.5	113.5	6.58	115.2	111.1	6.63	120.6	102.0	6.68	127.8	92.4	6.72	135.1	82.2	6.76	139.9	74.1	6.79	146.9	62.7	6.72
	79	112.0	112.0	6.92	113.3	110.1	6.98	118.6	101.1	7.02	125.7	91.5	7.07	132.9	81.5	7.11	137.6	73.5	7.14	144.7	61.9	7.09
	83	110.4	110.4	7.26	111.4	109.1	7.32	116.7	100.2	7.37	123.6	90.7	7.41	130.6	80.8	7.46	135.3	72.8	7.49	142.4	61.2	7.46
	87	108.9	108.9	7.60	109.5	108.0	7.66	114.7	99.2	7.71	121.5	89.8	7.76	128.4	80.0	7.81	133.0	72.1	7.84	140.1	60.4	7.83
	91	107.4	107.4	7.94	107.6	106.9	8.00	112.7	98.2	8.05	119.4	88.9	8.10	126.2	79.2	8.15	130.7	71.4	8.19	137.9	59.6	8.20
	93	106.7	106.7	8.11	106.6	106.4	8.18	111.7	97.7	8.23	118.4	88.5	8.28	125.1	78.8	8.33	129.5	71.0	8.36	136.7	59.3	8.38
	95	105.9	105.9	8.28	105.7	105.7	8.35	110.7	97.2	8.40	117.3	88.0	8.45	124.0	78.4	8.50	128.4	70.6	8.54	135.6	58.9	8.57
	99	104.4	104.4	8.62	103.8	103.8	8.69	108.7	96.2	8.74	115.2	87.0	8.80	121.7	77.5	8.85	126.1	69.9	8.89	133.3	58.1	8.94
	103	102.9	102.9	8.96	101.9	101.9	9.03	106.7	95.1	9.09	113.1	86.1	9.14	119.5	76.6	9.20	123.8	69.1	9.24	131.1	57.3	9.31
	106	101.7	101.7	9.21	100.5	100.5	9.29	105.2	94.3	9.35	111.5	85.3	9.40	117.8	76.0	9.46	122.1	68.5	9.50	129.4	56.7	9.58
	110	100.2	100.2	9.55	98.6	98.6	9.63	103.2	93.2	9.69	109.4	84.3	9.75	115.6	75.1	9.81	119.7	67.7	9.85	127.1	55.9	9.95
	115	98.3	98.3	9.98	96.2	96.2	10.06	100.8	91.7	10.12	106.8	83.0	10.18	112.8	73.9	10.24	116.9	66.6	10.28	124.3	54.9	10.41
	118																					
	122																					
4000 CFM	23	122.4	122.4	4.49	125.4	119.9	4.48	131.4	110.1	4.35	139.2	99.7	4.22	147.1	88.8	4.07	152.3	80.0	3.97	160.8	69.2	3.83
	30	122.1	122.1	4.52	125.1	119.6	4.55	131.1	109.9	4.42	138.9	99.5	4.28	146.8	88.6	4.13	152.0	79.8	4.03	160.7	69.2	3.88
	40	121.8	121.8	4.58	124.7	119.2	4.64	130.7	109.5	4.51	138.5	99.1	4.37	146.3	88.3	4.21	151.5	79.6	4.11	160.6	69.1	3.96
	50	121.4	121.4	4.63	124.3	118.8	4.85	130.2	109.2	4.70	138.0	98.8	4.56	145.8	88.0	4.39	151.0	79.3	4.29	160.5	69.1	4.42
	54	121.2	121.2	4.80	124.2	118.7	4.84	130.1	109.1	4.87	137.8	98.7	4.90	145.7	87.9	4.94	150.9	79.2	4.96	160.4	69.1	4.79
	58	121.1	121.1	5.14	124.0	118.5	5.18	129.9	108.9	5.22	137.7	98.6	5.25	145.5	87.8	5.29	150.7	79.1	5.31	159.3	68.6	5.16
	62	120.5	120.5	5.48	123.5	118.4	5.53	129.4	108.8	5.56	137.1	98.5	5.60	144.9	87.7	5.63	150.0	79.0	5.66	157.0	67.6	5.53
	66	119.0	119.0	5.82	121.6	117.5	5.87	127.3	107.9	5.91	134.9	97.7	5.94	142.6	87.0	5.98	147.7	78.4	6.01	154.7	66.8	5.90
	70	117.4	117.4	6.16	119.6	116.5	6.21	125.3	107.0	6.25	132.8	96.9	6.29	140.3	86.3	6.33	145.3	77.8	6.36	152.4	66.0	6.27
	72	116.7	116.7	6.33	118.7	116.0	6.38	124.3	106.6	6.42	131.7	96.5	6.46	139.2	85.9	6.51	144.2	77.4	6.53	151.3	65.7	6.45
	75	115.5	115.5	6.58	117.2	115.3	6.64	122.8	105.9	6.68	130.1	95.9	6.72	137.5	85.3	6.77	142.4	76.9	6.80	149.5	65.1	6.73
	79	114.0	114.0	6.92	115.3	114.2	6.98	120.8	104.9	7.03	128.0	95.0	7.07	135.2	84.6	7.12	140.1	76.2	7.14	147.2	64.3	7.10
	83	112.4	112.4	7.27	113.4	113.2	7.33	118.7	104.0	7.37	125.8	94.1	7.42	133.0	83.8	7.46	137.7	75.5	7.49	144.9	63.5	7.47
	87	110.9	110.9	7.61	111.4	112.1	7.67	116.7	103.0	7.72	123.7	93.2	7.76	130.7	83.0	7.81	135.4	74.8	7.84	142.6	62.7	7.84
	91	109.3	109.3	7.95	109.5	111.0	8.01	114.7	101.9	8.06	121.5	92.3	8.11	128.4	82.2	8.16	133.0	74.0	8.19	140.3	61.9	8.21
	93	108.6	108.6	8.12	108.5	110.4	8.18	113.7	101.4	8.23	120.5	91.8	8.28	127.3	81.7	8.34	131.9	73.7	8.37	139.2	61.5	8.39
	95	107.8	107.8	8.29	107.6	107.6	8.35	112.7	100.9	8.41	119.4	91.3	8.46	126.2	81.3	8.51	130.7	73.3	8.54	138.0	61.1	8.58
	99	106.2	106.2	8.63	105.6	105.6	8.70	110.7	99.8	8.75	117.3	90.3	8.80	123.9	80.4	8.86	128.3	72.5	8.89	135.7	60.3	8.95
	103	104.7	104.7	8.97	103.7	103.7	9.04	108.6	98.7	9.10	115.1	89.3	9.15	121.6	79.5	9.21	126.0	71.7	9.24	133.4	59.4	9.31
	106	103.5	103.5	9.22	102.3	102.3	9.30	107.1	97.8	9.35	113.5	88.6	9.41	120.0	78.9	9.47	124.2	71.1	9.51	131.7	58.8	9.59
	110	102.0	102.0	9.56	100.3	100.3	9.64	105.1	96.7	9.70	111.4	87.5	9.76	117.7	77.9	9.82	121.9	70.2	9.86	129.4	58.0	9.96
	115	100.1	100.1	9.99	97.9	97.9	10.07	102.6	95.2	10.13	108.7	86.2	10.19	114.9	76.7	10.25	119.0	69.2	10.29	126.5	56.9	10.42
	118																					
	122																					

TC: Evaporator Total Capacity (1,000 BTU/h) Net TC = TC - Blower input

SC: Evaporator Sensible Capacity(1,000 BTU/h) Net SC = SC - Blower input

PI: Power input(kW) Compressor + outdoor fan System PI = PI + Blower input

Note: TC and SC represent the evaporator's heat load and do not account for the blower input. To calculate the net capacity, subtract the blower input from each value.

is shown as reference data

The blank areas indicate that operation at this compressor speed is not possible under those conditions.

ID DB		85																				
ID WB		57			61			64			67			70			72			75		
ID CFM	OD DB	TC	SC	PI	TC	SC	PI	TC	SC	PI	TC	SC	PI	TC	SC	PI	TC	SC	PI	TC	SC	PI
	23	124.6	124.6	4.58	127.7	118.0	4.57	126.4	116.5	4.35	133.9	110.3	4.21	141.5	100.7	4.06	146.6	92.8	3.96	154.7	83.6	3.82
	30	124.3	124.3	4.61	127.4	117.8	4.64	126.1	116.2	4.41	133.6	110.1	4.27	141.2	100.5	4.12	146.2	92.6	4.02	154.6	83.6	3.87
	40	123.9	123.9	4.67	127.0	117.4	4.73	125.7	115.8	4.50	133.2	109.7	4.36	140.7	100.2	4.20	145.8	92.3	4.10	154.5	83.5	3.95
	50	123.6	123.6	4.72	126.6	117.0	4.94	125.3	115.5	4.69	132.8	109.4	4.55	140.3	99.9	4.39	145.3	92.0	4.28	154.4	83.4	4.41
	54	123.4	123.4	4.89	126.4	116.9	4.94	125.1	115.3	4.86	132.6	109.2	4.89	140.1	99.7	4.93	145.1	91.9	4.95	154.3	83.4	4.78
	58	123.3	123.3	5.24	126.2	116.7	5.29	125.0	115.2	5.21	132.4	109.1	5.24	139.9	99.6	5.27	144.9	91.7	5.30	153.3	82.9	5.15
	62	122.7	122.7	5.59	125.7	116.6	5.63	124.4	115.1	5.55	131.9	109.0	5.59	139.3	99.5	5.62	144.3	91.6	5.65	151.1	81.7	5.52
	66	121.1	121.1	5.93	123.7	115.7	5.98	122.5	114.1	5.89	129.8	108.1	5.93	137.2	98.7	5.97	142.1	90.9	6.00	148.8	80.7	5.89
	70	119.5	119.5	6.28	121.8	114.7	6.33	120.5	113.2	6.24	127.7	107.2	6.28	135.0	97.9	6.32	139.8	90.2	6.34	146.6	79.8	6.25
	72	118.8	118.8	6.45	120.8	114.2	6.51	119.6	112.7	6.41	126.7	106.8	6.45	133.9	97.5	6.49	138.7	89.8	6.52	145.5	79.3	6.44
	75	117.6	117.6	6.71	119.3	113.5	6.77	118.1	112.0	6.67	125.2	106.1	6.71	132.3	96.9	6.75	137.0	89.2	6.78	143.9	78.6	6.72
3200	79	116.0	116.0	7.06	117.4	112.5	7.12	116.2	111.0	7.01	123.1	105.1	7.06	130.1	96.0	7.10	134.7	88.4	7.13	141.6	77.6	7.08
CFM	83	114.4	114.4	7.41	115.4	111.4	7.47	114.2	110.0	7.36	121.0	104.1	7.40	127.9	95.1	7.45	132.5	87.6	7.48	139.4	76.7	7.45
	87	112.9	112.9	7.75	113.4	110.3	7.82	112.3	108.9	7.70	119.0	103.1	7.75	125.7	94.2	7.80	130.2	86.7	7.83	137.2	75.7	7.82
	91	111.3	111.3	8.10	111.5	109.2	8.17	110.3	107.8	8.05	116.9	102.1	8.09	123.6	93.2	8.14	128.0	85.9	8.18	135.0	74.8	8.19
	93	110.5	110.5	8.27	110.5	108.7	8.34	109.4	107.2	8.22	115.9	101.6	8.27	122.5	92.8	8.32	126.8	85.4	8.35	133.9	74.3	8.37
	95	109.7	109.7	8.45	109.5	109.5	8.52	108.4	106.7	8.39	114.9	101.0	8.44	121.4	92.3	8.49	125.7	85.0	8.53	132.8	73.8	8.56
	99	108.2	108.2	8.80	107.5	107.5	8.87	106.4	106.4	8.73	112.8	100.0	8.79	119.2	91.3	8.84	123.5	84.1	8.88	130.5	72.8	8.93
	103	106.6	106.6	9.14	105.6	105.6	9.22	104.5	104.5	9.08	110.7	98.8	9.13	117.0	90.3	9.19	121.2	83.1	9.23	128.3	71.8	9.30
	106	105.4	105.4	9.40	104.1	104.1	9.48	103.0	103.0	9.34	109.2	98.0	9.39	115.4	89.5	9.45	119.5	82.4	9.49	126.7	71.0	9.57
	110	103.8	103.8	9.75	102.1	102.1	9.83	101.1	101.1	9.68	107.1	96.8	9.74	113.2	88.4	9.80	117.3	81.4	9.84	124.4	70.0	9.94
	115	101.9	101.9	10.18	99.7	99.7	10.27	98.7	98.7	10.11	104.6	95.3	10.17	110.5	87.1	10.23	114.4	80.2	10.27	121.7	68.8	10.40
	118																					
	122																					
	23	127.2	127.2	4.58	130.4	122.2	4.58	129.1	120.6	4.35	136.8	114.2	4.21	144.5	104.3	4.06	149.7	96.1	3.97	157.9	86.6	3.83
	30	127.0	127.0	4.62	130.1	122.0	4.64	128.8	120.4	4.41	136.5	114.0	4.28	144.2	104.1	4.12	149.3	95.9	4.03	157.9	86.5	3.88
	40	126.6	126.6	4.67	129.7	121.6	4.74	128.4	120.0	4.50	136.0	113.6	4.36	143.7	103.8	4.21	148.9	95.6	4.11	157.8	86.5	3.95
	50	126.2	126.2	4.72	129.3	121.2	4.95	128.0	119.6	4.70	135.6	113.3	4.55	143.3	103.4	4.39	148.4	95.3	4.29	157.7	86.4	4.42
	54	126.1	126.1	4.90	129.1	121.0	4.94	127.8	119.4	4.87	135.4	113.1	4.90	143.1	103.3	4.93	148.2	95.1	4.95	157.6	86.4	4.79
	58	125.9	125.9	5.25	128.9	120.9	5.29	127.6	119.3	5.21	135.3	113.0	5.25	142.9	103.2	5.28	148.0	95.0	5.30	156.5	85.8	5.15
	62	125.3	125.3	5.59	128.4	120.8	5.64	127.1	119.2	5.56	134.7	112.9	5.59	142.3	103.1	5.63	147.4	94.9	5.65	154.3	84.6	5.52
	66	123.7	123.7	5.94	126.4	119.8	5.99	125.1	118.2	5.90	132.6	112.0	5.94	140.1	102.2	5.98	145.1	94.2	6.00	152.0	83.6	5.89
	70	122.1	122.1	6.29	124.4	118.8	6.34	123.1	117.3	6.25	130.5	111.0	6.29	137.9	101.4	6.33	142.8	93.4	6.35	149.8	82.6	6.26
	72	121.3	121.3	6.46	123.4	118.3	6.52	122.1	116.8	6.42	129.4	110.6	6.46	136.8	101.0	6.50	141.6	93.0	6.53	148.6	82.1	6.45
	75	120.1	120.1	6.72	121.9	117.5	6.78	120.6	116.0	6.68	127.8	109.9	6.72	135.1	100.3	6.76	139.9	92.4	6.79	146.9	81.4	6.72
3600	79	118.5	118.5	7.07	119.9	116.5	7.13	118.6	114.9	7.02	125.7	108.9	7.07	132.9	99.4	7.11	137.6	91.6	7.14	144.7	80.4	7.09
CFM	83	116.9	116.9	7.42	117.9	115.4	7.48	116.7	113.9	7.37	123.6	107.9	7.41	130.6	98.5	7.46	135.3	90.7	7.49	142.4	79.4	7.46
	87	115.3	115.3	7.76	115.8	114.3	7.83	114.7	112.8	7.71	121.5	106.8	7.76	128.4	97.5	7.81	133.0	89.8	7.84	140.1	78.4	7.83
	91	113.7	113.7	8.11	113.8	113.1	8.18	112.7	111.7	8.05	119.4	105.7	8.10	126.2	96.6	8.15	130.7	88.9	8.19	137.9	77.4	8.20
	93	112.9	112.9	8.28	112.8	112.6	8.35	111.7	111.1	8.23	118.4	105.2	8.28	125.1	96.1	8.33	129.5	88.5	8.36	136.7	76.9	8.38
	95	112.1	112.1	8.46	111.8	111.8	8.53	110.7	110.5	8.40	117.3	104.6	8.45	124.0	95.6	8.50	128.4	88.0	8.54	135.6	76.4	8.57
	99	110.5	110.5	8.81	109.8	109.8	8.88	108.7	108.7	8.74	115.2	103.5	8.80	121.7	94.5	8.85	126.1	87.1	8.89	133.3	75.4	8.94
	103	108.9	108.9	9.15	107.8	107.8	9.23	106.7	106.7	9.09	113.1	102.4	9.14	119.5	93.5	9.20	123.8	86.1	9.24	131.1	74.4	9.31
	106	107.7	107.7	9.41	106.3	106.3	9.49	105.2	105.2	9.35	111.5	101.5	9.40	117.8	92.7	9.46	122.1	85.4	9.50	129.4	73.6	9.58
	110	106.0	106.0	9.76	104.3	104.3	9.84	103.2	103.2	9.69	109.4	100.3	9.75	115.6	91.6	9.81	119.7	84.4	9.85	127.1	72.5	9.95
	115	104.0	104.0	10.20	101.8	101.8	10.28	100.8	100.8	10.12	106.8	98.8	10.18	112.8	90.2	10.24	116.9	83.1	10.28	124.3	71.2	10.41
	118																					
	122																					
	23	129.5	129.5	4.59	132.7	126.9	4.58	131.4	125.2	4.35	139.2	118.6	4.22	147.1	108.3	4.07	152.3	99.7	3.97	160.8	89.8	3.83
	30	129.2	129.2	4.62	132.4	126.6	4.65	131.1	124.9	4.42	138.9	118.3	4.28	146.8	108.0	4.13	152.0	99.5	4.03	160.7	89.8	3.88
	40	128.8	128.8	4.68	132.0	126.2	4.74	130.7	124.5	4.51	138.5	117.9	4.37	146.3	107.7	4.21	151.5	99.2	4.11	160.6	89.7	3.96
	50	128.5	128.5	4.73	131.6	125.8	4.95	130.2	124.1	4.70	138.0	117.5	4.56	145.8	107.3	4.39	151.0	98.9	4.29	160.5	89.7	4.42
	54	128.3	128.3	4.90	131.4	125.6	4.95	130.1	124.0	4.87	137.8	117.4	4.90	145.7	107.2	4.94	150.9	98.7	4.96	160.4	89.7	4.79
	58	128.1	128.1	5.25	131.2	125.4	5.30	129.9	123.8	5.22	137.7	117.2	5.25	145.5	107.1	5.29	150.7	98.6	5.31	159.3	89.0	5.16
	62	127.5	127.5	5.60	130.7	125.3	5.65	129.4	123.7	5.56	137.1	117.1	5.60	144.9	106.9	5.63	150.0	98.5	5.66	157.0	87.8	5.53
	66	125.9	125.9	5.95	128.6	124.3	6.00	127.3	122.7	5.91	134.9	116.2	5.94	142.6	106.1	5.98	147.7	97.7	6.01	154.7	86.7	5.90
	70	124.3	124.3	6.29	126.6	123.3	6.35	125.3	121.7	6.25	132.8	115.2	6.29	140.3	105.2	6.33	145.3	96.9	6.36	152.4	85.7	6.27
	72	123.5	123.5	6.47	125.6	122.8	6.52	124.3	121.2	6.42	131.7	114.7	6.46	139.2	104.8	6.51	144.2	96.5	6.53	151.3	85.2	6.45
	75	122.2	122.2	6.73	124.0	122.0	6.78	122.8	120.4	6.68	130.1	114.0	6.72	137.5	104.1	6.77	142.4	95.9	6.80	149.5	84.5	6.73
4000	79	120.6	120.6	7.07	122.0	120.9	7.14	120.8	119.3	7.03	128.0	113.0	7.07	135.2	103.2	7.12	140.1	95.0	7.14	147.2	83.4	7.10
CFM	83	119.0	119.0	7.42	120.0	119.8	7.49	118.7	118.2	7.37	125.8	111.9	7.42	133.0	102.2	7.46	137.7	94.1	7.49	144.9	82.4	7.47
	87	117.3	117.3	7.77	117.9	118.6	7.84	116.7	117.0	7.72	123.7	110.8	7.76	130.7	101.2	7.81	135.4	93.2	7.84	142.6	81.4	7.84
	91	115.7	115.7	8.12	115.9	117.4	8.19	114.7	115.9	8.06	121.5	109.7	8.11	128.4	100.2	8.16	133.0	92.3	8.19	140.3	80.3	8.21
	93	114.9	114.9	8.29	114.8	116.8	8.36	113.7	115.3	8.23	120.5	109.2	8.28	127.3	99.7	8.34	131.9	91.8	8.37	139.2	79.8	8.39
	95	114.1	114.1	8.47	113.8	113.8	8.54	112.7	114.7	8.41	119.4	108.6	8.46	126.2	99.2	8.51	130.7	91.3	8.54	138.0	79.3	8.58
	99	112.4	112.4	8.81	111.8	111.8	8.89	110.7	110.7	8.75	117.3	107.4	8.80	123.9	98.1	8.86	128.3	90.4	8.89	135.7	78.2	8.95
	103	110.8	110.8	9.16	109.7	109.7	9.24	108.6	108.6	9.10	115.1	106.2	9.15	121.6	97.0	9.21	126.0	89.3	9.24	133.4	77.2	9.31
	106	109.6	109.6	9.42	108.2	108.2	9.50	107.1	107.1	9.35	113.5	105.3	9.41	120.0	96.2	9.47	124.2	88.6	9.51	131.7	76.4	9.59
	110	107.9	107.9	9.77	106.2	106.2	9.85	105.1	105.1	9.70	111.4	104.1	9.76	117.7	95.0	9.82	121.9	87.5	9.86	129.4	75.3	9.96
	115	105.9	105.9	10.20	103.6	103.6	10.29	102.6	102.6	10.13	108.7	102.5	10.19	114.9	93.6	10.25	119.0	86.2	10.29	126.5	73.9	10.42
	118																					
	122																					

TC: Evaporator Total Capacity (1,000 BTU/h) Net TC = TC - Blower input

SC: Evaporator Sensible Capacity(1,000 BTU/h) Net SC = SC - Blower input

PI: Power input(kW) Compressor + outdoor fan System PI = PI + Blower input

Note: TC and SC represent the evaporator's heat load and do not account for the blower input. To calculate the net capacity, subtract the blower input from each value.

is shown as reference data

The blank areas indicate that operation at this compressor speed is not possible under those conditions.

ID DB		70												75																	
ID WB		57			61			64			67			57			61			64			67			70			72		
ID CFM	OD DB	TC	SC	PI	TC	SC	PI	TC	SC	PI	TC	SC	PI	TC	SC	PI	TC	SC	PI	TC	SC	PI	TC	SC	PI	TC	SC	PI	TC	SC	PI
	23	116.2	97.7	5.48	128.3	81.4	5.63	136.1	71.7	5.50	143.5	59.7	5.40	117.4	117.4	5.51	128.3	99.0	5.63	136.1	90.4	5.50	143.5	78.3	5.40	151.8	68.0	5.24	157.0	59.4	5.16
	30	116.0	97.5	5.53	128.1	81.3	5.67	135.9	71.6	5.54	143.3	59.6	5.43	117.2	117.2	5.55	128.1	98.9	5.67	135.9	90.2	5.54	143.3	78.2	5.43	151.5	67.9	5.28	156.7	59.3	5.20
	40	115.7	97.3	5.60	127.8	81.1	5.73	135.6	71.5	5.60	143.0	59.5	5.49	116.9	116.9	5.62	127.8	98.7	5.73	135.6	90.0	5.60	143.0	78.0	5.49	151.2	67.7	5.34	156.4	59.2	5.25
	50	115.3	97.0	5.67	127.5	80.9	5.82	135.3	71.3	5.81	142.7	59.4	5.80	116.6	116.6	5.69	127.5	98.5	5.82	135.3	89.8	5.81	142.7	77.9	5.80	150.9	67.6	5.79	156.1	59.1	5.79
	54	115.2	96.9	5.71	127.4	80.9	5.99	135.2	71.2	6.08	142.6	59.3	6.17	116.5	116.5	5.73	127.4	98.4	5.99	135.2	89.8	6.08	142.6	77.8	6.17	150.7	67.5	6.17	155.9	59.0	6.17
	58	115.1	96.8	6.07	127.2	80.8	6.36	134.9	71.1	6.45	142.3	59.2	6.54	116.3	116.3	6.10	127.2	98.2	6.36	134.9	89.6	6.45	142.3	77.7	6.54	150.5	67.4	6.55	155.6	58.9	6.55
	62	113.9	96.1	6.44	125.4	80.1	6.74	133.0	70.6	6.82	140.3	58.8	6.91	115.1	115.1	6.47	125.4	97.5	6.74	133.0	88.9	6.82	140.3	77.1	6.91	148.3	66.9	6.92	153.4	58.5	6.93
	66	112.6	95.2	6.81	123.6	79.5	7.11	131.1	70.0	7.20	138.3	58.3	7.28	113.8	113.8	6.83	123.6	96.7	7.11	131.1	88.2	7.20	138.3	76.5	7.28	146.2	66.3	7.30	151.2	58.0	7.31
	70	111.2	94.2	7.17	121.8	78.8	7.48	129.2	69.4	7.57	136.2	57.8	7.65	112.4	112.4	7.20	121.8	95.9	7.48	129.2	87.5	7.57	136.2	75.8	7.65	144.0	65.8	7.68	149.0	57.5	7.69
	72	110.5	93.8	7.35	120.9	78.5	7.67	128.2	69.1	7.75	135.2	57.6	7.84	111.7	111.7	7.38	120.9	95.4	7.67	128.2	87.1	7.75	135.2	75.5	7.84	143.0	65.5	7.87	147.9	57.3	7.89
	75	109.5	93.1	7.63	119.5	78.0	7.95	126.8	68.7	8.03	133.7	57.2	8.12	110.7	110.7	7.66	119.5	94.8	7.95	126.8	86.5	8.03	133.7	75.0	8.12	141.3	65.1	8.15	146.2	56.9	8.17
3200	79	108.1	92.2	8.00	117.7	77.3	8.33	124.9	68.1	8.41	131.7	56.7	8.49	109.3	109.3	8.03	117.7	94.0	8.33	124.9	85.7	8.41	131.7	74.3	8.49	139.2	64.5	8.53	144.0	56.4	8.55
CFM	83	106.8	91.2	8.36	115.9	76.5	8.70	122.9	67.4	8.78	129.6	56.1	8.86	107.9	107.9	8.39	115.9	93.1	8.70	122.9	84.9	8.78	129.6	73.6	8.86	137.1	63.9	8.90	141.8	55.8	8.93
	87	105.4	90.3	8.73	114.1	75.8	9.07	121.0	66.8	9.15	127.6	55.6	9.23	106.6	106.6	8.76	114.1	92.2	9.07	121.0	84.1	9.15	127.6	72.9	9.23	134.9	63.3	9.28	139.6	55.3	9.31
	91	104.1	89.3	9.09	112.2	75.1	9.45	119.1	66.1	9.52	125.6	55.1	9.60	105.2	105.2	9.13	112.2	91.3	9.45	119.1	83.3	9.52	125.6	72.2	9.60	132.8	62.6	9.66	137.3	54.8	9.70
	93	103.4	88.9	9.28	111.3	74.7	9.64	118.1	65.8	9.71	124.6	54.8	9.79	104.5	104.5	9.31	111.3	90.9	9.64	118.1	82.9	9.71	124.6	71.9	9.79	131.7	62.3	9.85	136.2	54.5	9.89
	95	102.7	88.4	9.46	110.4	74.3	9.82	117.2	65.5	9.90	123.6	54.5	9.97	103.8	103.8	9.50	110.4	90.4	9.82	117.2	82.5	9.90	123.6	71.5	9.97	130.6	62.0	10.03	135.1	54.2	10.08
	99	101.4	87.4	9.83	108.6	73.5	10.20	115.2	64.8	10.27	121.5	53.9	10.34	102.4	102.4	9.86	108.6	89.4	10.20	115.2	81.6	10.27	121.5	70.7	10.34	128.5	61.4	10.41	132.9	53.7	10.46
	103	100.0	86.5	10.19	106.8	72.7	10.57	113.3	64.1	10.64	119.5	53.4	10.71	101.1	101.1	10.23	106.8	88.5	10.57	113.3	80.7	10.64	119.5	70.0	10.71	126.3	60.7	10.79	130.7	53.1	10.84
	106	99.0	85.7	10.47	105.5	72.1	10.85	111.9	63.6	10.92	118.0	52.9	10.99	100.0	100.0	10.51	105.5	87.8	10.85	111.9	80.1	10.92	118.0	69.4	10.99	124.7	60.2	11.07	129.0	52.6	11.12
	110	97.6	84.8	10.83	103.6	71.3	11.23	110.0	62.8	11.29	116.0	52.3	11.36	98.7	98.7	10.87	103.6	86.8	11.23	110.0	79.2	11.29	116.0	68.6	11.36	122.6	59.5	11.45	126.8	52.0	11.50
	115																														
	118																														
	122																														
	23	118.9	101.4	5.50	131.2	84.5	5.65	139.2	74.5	5.52	146.8	62.0	5.41	120.1	120.1	5.52	131.2	102.8	5.65	139.2	93.8	5.52	146.8	81.3	5.41	155.2	70.5	5.26	160.6	61.7	5.17
	30	118.6	101.3	5.55	131.0	84.4	5.69	139.0	74.3	5.56	146.6	61.9	5.45	119.9	119.9	5.57	131.0	102.7	5.69	139.0	93.7	5.56	146.6	81.2	5.45	155.0	70.4	5.30	160.3	61.6	5.21
	40	118.3	101.0	5.62	130.8	84.2	5.75	138.7	74.2	5.61	146.3	61.8	5.51	119.6	119.6	5.64	130.8	102.4	5.75	138.7	93.5	5.61	146.3	81.0	5.51	154.7	70.3	5.35	160.0	61.4	5.27
	50	118.0	100.7	5.68	130.5	84.0	5.83	138.4	74.0	5.82	146.0	61.6	5.81	119.3	119.3	5.71	130.5	102.2	5.83	138.4	93.3	5.82	146.0	80.8	5.81	154.3	70.1	5.81	159.6	61.3	5.81
	54	117.9	100.6	5.72	130.4	84.0	6.00	138.3	74.0	6.09	145.8	61.6	6.18	119.1	119.1	5.75	130.4	102.1	6.00	138.3	93.2	6.09	145.8	80.8	6.18	154.2	70.1	6.19	159.5	61.3	6.19
	58	117.7	100.5	6.09	130.1	83.8	6.38	138.0	73.8	6.47	145.6	61.5	6.56	119.0	119.0	6.11	130.1	102.0	6.38	138.0	93.0	6.47	145.6	80.7	6.56	153.9	70.0	6.56	159.2	61.2	6.57
	62	116.5	99.7	6.46	128.3	83.2	6.75	136.1	73.3	6.84	143.5	61.0	6.93	117.8	117.8	6.48	128.3	101.2	6.75	136.1	92.3	6.84	143.5	80.0	6.93	151.7	69.4	6.94	156.9	60.7	6.95
	66	115.1	98.8	6.82	126.4	82.5	7.13	134.1	72.7	7.21	141.4	60.5	7.30	116.4	116.4	6.85	126.4	100.3	7.13	134.1	91.6	7.21	141.4	79.4	7.30	149.5	68.8	7.32	154.7	60.2	7.33
	70	113.8	97.8	7.19	124.6	81.8	7.50	132.1	72.1	7.59	139.4	60.0	7.67	115.0	115.0	7.22	124.6	99.5	7.50	132.1	90.8	7.59	139.4	78.7	7.67	147.3	68.3	7.70	152.4	59.7	7.72
	72	113.1	97.3	7.37	123.6	81.5	7.69	131.2	71.8	7.77	138.3	59.7	7.86	114.3	114.3	7.40	123.6	99.1	7.69	131.2	90.4	7.77	138.3	78.4	7.86	146.2	68.0	7.89	151.3	59.4	7.91
	75	112.0	96.6	7.65	122.2	80.9	7.97	129.7	71.3	8.06	136.8	59.4	8.14	113.2	113.2	7.68	122.2	98.4	7.97	129.7	89.8	8.06	136.8	77.8	8.14	144.6	67.5	8.17	149.6	59.0	8.19
3600	79	110.6	95.7	8.02	120.4	80.2	8.35	127.7	70.6	8.43	134.7	58.8	8.51	111.8	111.8	8.05	120.4	97.5	8.35	127.7	89.0	8.43	134.7	77.2	8.51	142.4	66.9	8.55	147.3	58.5	8.57
CFM	83	109.2	94.7	8.38	118.5	79.4	8.72	125.8	70.0	8.80	132.6	58.3	8.88	110.4	110.4	8.42	118.5	96.6	8.72	125.8	88.2	8.80	132.6	76.4	8.88	140.2	66.3	8.93	145.0	58.0	8.96
	87	107.8	93.7	8.75	116.7	78.7	9.10	123.8	69.3	9.18	130.5	57.7	9.25	109.0	109.0	8.79	116.7	95.7	9.10	123.8	87.3	9.18	130.5	75.7	9.25	138.0	65.7	9.30	142.8	57.4	9.34
	91	106.5	92.7	9.12	114.8	77.9	9.47	121.8	68.6	9.55	128.5	57.2	9.63	107.6	107.6	9.15	114.8	94.8	9.47	121.8	86.5	9.55	128.5	75.0	9.63	135.8	65.0	9.68	140.5	56.9	9.72
	93	105.8	92.2	9.30	113.9	77.5	9.66	120.8	68.3	9.74	127.4	56.9	9.81	106.9	106.9	9.34	113.9	94.3	9.66	120.8	86.0	9.74	127.4	74.6	9.81	134.7	64.7	9.87	139.4	56.6	9.91
	95	105.1	91.8	9.48	113.0	77.1	9.85	119.9	67.9	9.92	126.4	56.6	10.00	106.2	106.2	9.52	113.0	93.8	9.85	119.9	85.6	9.92	126.4	74.2	10.00	133.6	64.4	10.06	138.2	56.3	10.10
	99	103.7	90.8	9.85	111.1	76.3	10.22	117.9	67.2	10.30	124.3	56.0	10.37	104.8	104.8	9.89	111.1	92.8	10.22	117.9	84.7	10.30	124.3	73.4	10.37	131.4	63.7	10.44	136.0	55.7	10.48
	103	102.3	89.8	10.22	109.3	75.5	10.60	115.9	66.5	10.67	122.2	55.4	10.74	103.4	103.4	10.26	109.3	91.9	10.60	115.9	83.8	10.67	122.2	72.6	10.74	129.2	63.0	10.82	133.7	55.1	10.87
	106	101.2	89.0	10.49	107.9	74.9	10.88	114.5	66.0	10.95	120.7	54.9	11.02	102.3	102.3	10.54	107.9	91.1	10.88	114.5	83.1	10.95	120.7	72.0	11.02	127.6	62.5	11.10	132.0	54.6	11.15
	110	99.9	88.0	10.86	106.0	74.0	11.25	112.5	65.2	11.32	118.6	54.3	11.39	100.9	100.9	10.90	106.0	90.1	11.25	112.5	82.2	11.32	118.6	71.2	11.39	125.4	61.8	11.48	129.7	54.0	11.54
	115																														
	118																														
	122																														
	23	121.1	105.1	5.51	133.7	87.6	5.66	141.9	77.1	5.53	149.6	64.2	5.42	122.4	122.4	5.53	133.7	106.5	5.66	141.9	97.2	5.53	149.6	84.2	5.42	158.2	73.1	5.27	163.6	63.9	5.18
	30	120.9	104.9	5.56	133.5	87.4	5.70	141.7	77.0	5.57	149.4	64.1	5.46	122.2	122.2	5.58	133.5	106.4	5.70	141.7	97.0	5.57	149.4	84.1	5.46	158.0	73.0	5.31	163.4	63.8	5.22
	40	120.6	104.6	5.63	133.2	87.2	5.76	141.4	76.9	5.63	149.1	64.0	5.52	121.9	121.9	5.65	133.2	106.1	5.76	141.4	96.8	5.63	149.1	83.9	5.52	157.6	72.8	5.36	163.0	63.7	5.28
	50	120.2	104.3	5.70	133.0	87.1	5.84	141.1	76.7	5.83	148.8	63.9	5.82	121.5	121.5	5.72	133.0	105.9	5.84	141.1	96.6	5.83	148.8	83.8	5.82	157.3	72.7	5.82	162.7	63.5	5.82
	54	120.1	104.2	5.74	132.8	87.0	6.02	140.9	76.6	6.11	148.6	63.8	6.20	121.4	121.4	5.76	132.8	105.8	6.02	140.9	96.5	6.11	148.6	83.7	6.20	157.1	72.6	6.20	162.5	63.5	6.20
	58	120.0	104.1	6.10	132.6	86.8	6.39	140.7	76.5	6.48	148.3	63.7	6.57	121.3	121.3	6.13	132.6	105.6	6.39	140.7	96.4	6.48	148.3	83.6	6.57	156.8	72.5	6.58	162.2	63.4	6.58
	62	118.7	103.3	6.47	130.7	86.2	6.77	138.7	75.9	6.86	146.2	63.2	6.94	120.0	120.0	6.50	130.7	104.8	6.77	138.7	95.6	6.86	146.2	82.9	6.94	154.6	71.9	6.96	159.9	62.9	6.97
	66	117.3	102.3	6.84	128.8	85.5	7.14	136.7	75.3	7.23	144.1	62.7	7.32	118.6	118.6	6.87	128.8	104.0	7.14	136.7	94.9	7.23	144.1	82.2	7.32	152.4	71.3	7.34	157.6	62.4	7.35
	70	115.9	101.3	7.21	126.9	84.7	7.52	134.7	74.7	7.60	142.0	62.2	7.69	117.2	117.2	7.23	126.9	103.1	7.52	134.7	94.1	7.60	142.0	81.5	7.69	150.1	70.7	7.71	155.3	61.8	7.73
	72	115.2	100.9	7.39	126.0	84.4	7.71	133.7	74.3	7.79	141.0	61.9	7.87	116.4	116.4	7.42	126.0	102.6	7.71	133.7	93.7	7.79	141.0	81.2	7.87	149.0	70.4	7.90	154.1	61.6	7.92
	75	114.1	100.1	7.67	124.6	83.8	7.99	132.2	73.9	8.07	139.4	61.5	8.15	115.4	115.4	7.70	124.6	102.0	7.99	132.2	93.0	8.07	139.4	80.7	8.15	147.3	70.0	8.19	152.4	61.2	8.21
4000	79	112.7	99.1	8.03	122.7	83.1	8.37	130.2	73.2	8.45	137.3	60.9	8.53	113.9	113.9	8.07	122.7	101.1	8.37	130.2	92.2	8.45	137.3	79.9	8.53	145.1	69.3	8.57	150.1	60.6	8.59
CFM	83	111.3	98.1	8.40	120.8	82.3	8.74	128.2	72.5	8.82	135.1	60.4	8.90	112.5	112.5	8.43	120.8	100.1	8.74	128.2	91.4	8.82	135.1	79.2	8.90	142.9	68.7	8.95	147.8	60.1	8.98
	87	109.9	97.1	8.77	118.9	81.5	9.12	126.1	71.8	9.20	133.0	59.8	9.27	111.1	111.1	8.80	118.9	99.2	9.12	126.1	90.5	9.20	133.0	78.4	9.27	140.6	68.0	9.32	145.5	59.5	9.36
	91	108.5	96.1	9.14	117.0	80.7	9.49	124.1	71.1	9.57	130.9	59.2	9.65	109.6	109.6	9.17	117.0	98.2	9.49	124.1	89.6	9.57	130.9	77.7	9.65	138.4	67.4	9.70	143.2	58.9	9.74
	93	107.8	95.6	9.32	116.1	80.3	9.68	123.1	70.8	9.76	129.9	58.9	9.83	108.9	108.9	9.36	116.1	97.7	9.68	123.1	89.1	9.76	129.9	77.3	9.83	137.3	67.0	9.89	142.0	58.6	9.93
	95	107.1	95.1	9.50	115.1	79.9	9.87	122.1	70.4	9.94	128.8	58.6	10.02	108.2	108.2	9.54	115.1	97.2	9.87	122.1	88.7	9.94	128.8	76.9	10.02	136.2	66.7	10.08	140.9	58.3	10.12
	99	105.7	94.0	9.87	113.2	79.1	10.25	120.1	69.7	10.32	126.7	58.0	10.39	106.8	106.8	9.91	113.2	96.2	10.25	120.1	87.8	10.32	126.7	76.1	10.39	133.9	66.0	10.46	138.5	57.7	10.51
	103	104.2	93.0	10.24	111.3	78.2	10.62	118.1	68.9	10.69	124.6	57.4	10.76	105.4	105.4	10.28	111.3	95.2	10.62	118.1	86.8	10.69	124.6	75.3	10.76	131.7	65.3	10.84	136.2	57.1	10.89
	106	103.2	92.2	10.52	109.9	77.6	10.90	116.6	68.3	10.97	123.0	56.9	11.04	104.3	104.3	10.56	109.9	94.4	10.90	116.6	86.1	10.97	123.0	74.6	11.04	130.0	64.8	11.12	134.5	56.6	11.18
	110	101.8	91.2	10.88	108.0	76.7	11.28	114.6	67.6	11.35	120.9	56.3	11.42	102.9	102.9	10.93	108.0	93.3	11.28	114.6	85.1	11.35	120.9	73.8	11.42	127.8	64.0	11.50	132.2	56.0	11.56
	115																														
	118																														
	122																														

TC: Evaporator Total Capacity (1,000 BTU/h) Net TC = TC - Blower input

SC: Evaporator Sensible Capacity(1,000 BTU/h) Net SC = SC - Blower input

PI: Power input(kW) Compressor + outdoor fan System PI = PI + Blower input

Note: TC and SC represent the evaporator's heat load and do not account for the blower input. To calculate the net capacity, subtract the blower input from each value.

is shown as reference data

The blank areas indicate that operation at this compressor speed is not possible under those conditions.

ID DB		80																				
ID WB		57			61			64			67			70			72			75		
ID CFM	OD DB	TC	SC	PI	TC	SC	PI	TC	SC	PI	TC	SC	PI	TC	SC	PI	TC	SC	PI	TC	SC	PI
3200 CFM	23	124.3	124.3	5.64	128.3	116.2	5.63	136.1	108.1	5.50	143.5	96.5	5.40	151.8	86.7	5.24	157.0	78.0	5.16	166.0	68.4	4.99
	30	124.1	124.1	5.69	128.1	116.1	5.67	135.9	108.0	5.54	143.3	96.4	5.43	151.5	86.5	5.28	156.7	77.9	5.20	165.9	68.4	5.07
	40	123.7	123.7	5.76	127.8	115.8	5.73	135.6	107.7	5.60	143.0	96.2	5.49	151.2	86.4	5.34	156.4	77.7	5.25	165.7	68.3	5.18
	50	123.4	123.4	5.83	127.5	115.6	5.82	135.3	107.5	5.81	142.7	96.0	5.80	150.9	86.2	5.79	156.1	77.5	5.79	165.5	68.2	5.79
	54	123.3	123.3	5.87	127.4	115.4	5.99	135.2	107.4	6.08	142.6	95.9	6.17	150.7	86.1	6.17	155.9	77.5	6.17	165.5	68.2	6.17
	58	123.1	123.1	6.24	127.2	115.3	6.36	134.9	107.2	6.45	142.3	95.8	6.54	150.5	86.0	6.55	155.6	77.3	6.55	163.5	67.4	6.56
	62	121.9	121.9	6.62	125.4	114.4	6.74	133.0	106.4	6.82	140.3	95.0	6.91	148.3	85.3	6.92	153.4	76.7	6.93	161.2	66.6	6.95
	66	120.4	120.4	7.00	123.6	113.4	7.11	131.1	105.5	7.20	138.3	94.2	7.28	146.2	84.6	7.30	151.2	76.1	7.31	158.9	65.8	7.33
	70	119.0	119.0	7.37	121.8	112.5	7.48	129.2	104.6	7.57	136.2	93.4	7.65	144.0	83.9	7.68	149.0	75.5	7.69	156.7	65.0	7.72
	72	118.3	118.3	7.56	120.9	112.0	7.67	128.2	104.2	7.75	135.2	93.0	7.84	143.0	83.5	7.87	147.9	75.1	7.89	155.5	64.6	7.91
	75	117.2	117.2	7.84	119.5	111.3	7.95	126.8	103.5	8.03	133.7	92.4	8.12	141.3	83.0	8.15	146.2	74.7	8.17	153.8	64.1	8.20
	79	115.7	115.7	8.22	117.7	110.3	8.33	124.9	102.6	8.41	131.7	91.6	8.49	139.2	82.2	8.53	144.0	74.0	8.55	151.5	63.3	8.59
	83	114.3	114.3	8.60	115.9	109.3	8.70	122.9	101.6	8.78	129.6	90.8	8.86	137.1	81.5	8.90	141.8	73.3	8.93	149.3	62.5	8.98
	87	112.8	112.8	8.97	114.1	108.2	9.07	121.0	100.7	9.15	127.6	89.9	9.23	134.9	80.7	9.28	139.6	72.6	9.31	147.0	61.7	9.37
	91	111.4	111.4	9.35	112.2	107.2	9.45	119.1	99.7	9.52	125.6	89.0	9.60	132.8	79.9	9.66	137.3	71.9	9.70	144.7	60.9	9.75
	93	110.6	110.6	9.54	111.3	106.6	9.64	118.1	99.2	9.71	124.6	88.6	9.79	131.7	79.5	9.85	136.2	71.5	9.89	143.6	60.5	9.95
	95	109.9	109.9	9.72	110.4	106.1	9.82	117.2	98.7	9.90	123.6	88.1	9.97	130.6	79.1	10.03	135.1	71.2	10.08	142.4	60.0	10.14
	99	108.4	108.4	10.10	108.6	105.0	10.20	115.2	97.6	10.27	121.5	87.2	10.34	128.5	78.3	10.41	132.9	70.4	10.46	140.2	59.2	10.53
	103	107.0	107.0	10.48	106.8	103.8	10.57	113.3	96.6	10.64	119.5	86.3	10.71	126.3	77.4	10.79	130.7	69.7	10.84	137.9	58.4	10.91
	106	105.9	105.9	10.76	105.5	103.0	10.85	111.9	95.8	10.92	118.0	85.5	10.99	124.7	76.8	11.07	129.0	69.1	11.12	136.2	57.8	11.20
	110	104.4	104.4	11.13	103.6	101.8	11.23	110.0	94.7	11.29	116.0	84.6	11.36	122.6	75.9	11.45	126.8	68.3	11.50	133.9	57.0	11.59
	115																					
	118																					
	122																					
3600 CFM	23	127.2	127.2	5.65	131.2	120.6	5.65	139.2	112.2	5.52	146.8	100.2	5.41	155.2	90.0	5.26	160.6	80.9	5.17	169.8	71.0	5.01
	30	126.9	126.9	5.70	131.0	120.5	5.69	139.0	112.1	5.56	146.6	100.1	5.45	155.0	89.8	5.30	160.3	80.8	5.21	169.7	71.0	5.08
	40	126.6	126.6	5.77	130.8	120.2	5.75	138.7	111.8	5.61	146.3	99.9	5.51	154.7	89.6	5.35	160.0	80.6	5.27	169.5	70.9	5.19
	50	126.2	126.2	5.84	130.5	119.9	5.83	138.4	111.6	5.82	146.0	99.6	5.81	154.3	89.4	5.81	159.6	80.5	5.81	169.3	70.8	5.80
	54	126.1	126.1	5.88	130.4	119.8	6.00	138.3	111.5	6.09	145.8	99.5	6.18	154.2	89.4	6.19	159.5	80.4	6.19	169.3	70.8	6.19
	58	126.0	126.0	6.26	130.1	119.7	6.38	138.0	111.3	6.47	145.6	99.4	6.56	153.9	89.2	6.56	159.2	80.3	6.57	167.2	69.9	6.58
	62	124.7	124.7	6.64	128.3	118.7	6.75	136.1	110.4	6.84	143.5	98.6	6.93	151.7	88.5	6.94	156.9	79.6	6.95	164.9	69.1	6.96
	66	123.2	123.2	7.01	126.4	117.8	7.13	134.1	109.5	7.21	141.4	97.8	7.30	149.5	87.8	7.32	154.7	79.0	7.33	162.6	68.3	7.35
	70	121.7	121.7	7.39	124.6	116.8	7.50	132.1	108.6	7.59	139.4	97.0	7.67	147.3	87.1	7.70	152.4	78.3	7.72	160.3	67.5	7.74
	72	121.0	121.0	7.58	123.6	116.3	7.69	131.2	108.2	7.77	138.3	96.6	7.86	146.2	86.7	7.89	151.3	78.0	7.91	159.1	67.1	7.93
	75	119.9	119.9	7.86	122.2	115.5	7.97	129.7	107.5	8.06	136.8	95.9	8.14	144.6	86.1	8.17	149.6	77.5	8.19	157.3	66.5	8.23
	79	118.4	118.4	8.24	120.4	114.5	8.35	127.7	106.5	8.43	134.7	95.1	8.51	142.4	85.4	8.55	147.3	76.8	8.57	155.0	65.7	8.61
	83	116.9	116.9	8.62	118.5	113.4	8.72	125.8	105.5	8.80	132.6	94.2	8.88	140.2	84.6	8.93	145.0	76.1	8.96	152.7	64.8	9.00
	87	115.4	115.4	8.99	116.7	112.3	9.10	123.8	104.5	9.18	130.5	93.3	9.25	138.0	83.8	9.30	142.8	75.4	9.34	150.4	64.0	9.39
	91	113.9	113.9	9.37	114.8	111.2	9.47	121.8	103.5	9.55	128.5	92.4	9.63	135.8	82.9	9.68	140.5	74.6	9.72	148.0	63.2	9.78
	93	113.2	113.2	9.56	113.9	110.7	9.66	120.8	103.0	9.74	127.4	91.9	9.81	134.7	82.5	9.87	139.4	74.2	9.91	146.9	62.8	9.97
	95	112.4	112.4	9.75	113.0	110.1	9.85	119.9	102.4	9.92	126.4	91.5	10.00	133.6	82.1	10.06	138.2	73.9	10.10	145.7	62.3	10.17
	99	110.9	110.9	10.13	111.1	109.0	10.22	117.9	101.4	10.30	124.3	90.5	10.37	131.4	81.3	10.44	136.0	73.1	10.48	143.4	61.5	10.55
	103	109.4	109.4	10.50	109.3	107.8	10.60	115.9	100.3	10.67	122.2	89.5	10.74	129.2	80.4	10.82	133.7	72.3	10.87	141.1	60.6	10.94
	106	108.3	108.3	10.79	107.9	106.9	10.88	114.5	99.4	10.95	120.7	88.8	11.02	127.6	79.7	11.10	132.0	71.7	11.15	139.3	60.0	11.23
	110	106.8	106.8	11.16	106.0	105.7	11.25	112.5	98.3	11.32	118.6	87.8	11.39	125.4	78.8	11.48	129.7	70.9	11.54	137.0	59.1	11.62
	115																					
	118																					
	122																					
4000 CFM	23	129.6	129.6	5.66	133.7	125.0	5.66	141.9	116.3	5.53	149.6	103.8	5.42	158.2	93.2	5.27	163.6	83.9	5.18	173.1	73.6	5.02
	30	129.3	129.3	5.71	133.5	124.8	5.70	141.7	116.1	5.57	149.4	103.7	5.46	158.0	93.1	5.31	163.4	83.7	5.22	172.9	73.5	5.09
	40	129.0	129.0	5.78	133.2	124.5	5.76	141.4	115.9	5.63	149.1	103.4	5.52	157.6	92.9	5.36	163.0	83.5	5.28	172.7	73.4	5.21
	50	128.7	128.7	5.85	133.0	124.3	5.84	141.1	115.6	5.83	148.8	103.2	5.82	157.3	92.7	5.82	162.7	83.4	5.82	172.6	73.4	5.81
	54	128.5	128.5	5.90	132.8	124.2	6.02	140.9	115.5	6.11	148.6	103.1	6.20	157.1	92.6	6.20	162.5	83.3	6.20	172.5	73.3	6.20
	58	128.4	128.4	6.27	132.6	124.0	6.39	140.7	115.3	6.48	148.3	103.0	6.57	156.8	92.5	6.58	162.2	83.2	6.58	170.4	72.4	6.59
	62	127.1	127.1	6.65	130.7	123.0	6.77	138.7	114.4	6.86	146.2	102.2	6.94	154.6	91.7	6.96	159.9	82.5	6.97	168.0	71.6	6.98
	66	125.5	125.5	7.03	128.8	122.0	7.14	136.7	113.5	7.23	144.1	101.3	7.32	152.4	91.0	7.34	157.6	81.8	7.35	165.7	70.8	7.37
	70	124.0	124.0	7.41	126.9	121.0	7.52	134.7	112.5	7.60	142.0	100.5	7.69	150.1	90.2	7.71	155.3	81.2	7.73	163.3	69.9	7.76
	72	123.3	123.3	7.60	126.0	120.5	7.71	133.7	112.1	7.79	141.0	100.1	7.87	149.0	89.8	7.90	154.1	80.8	7.92	162.1	69.5	7.95
	75	122.1	122.1	7.88	124.6	119.7	7.99	132.2	111.3	8.07	139.4	99.4	8.15	147.3	89.2	8.19	152.4	80.3	8.21	160.3	68.9	8.24
	79	120.6	120.6	8.26	122.7	118.6	8.37	130.2	110.3	8.45	137.3	98.5	8.53	145.1	88.4	8.57	150.1	79.6	8.59	158.0	68.0	8.63
	83	119.1	119.1	8.64	120.8	117.5	8.74	128.2	109.3	8.82	135.1	97.6	8.90	142.9	87.6	8.95	147.8	78.8	8.98	155.6	67.2	9.02
	87	117.6	117.6	9.01	118.9	116.4	9.12	126.1	108.3	9.20	133.0	96.7	9.27	140.6	86.8	9.32	145.5	78.1	9.36	153.2	66.3	9.41
	91	116.1	116.1	9.39	117.0	115.2	9.49	124.1	107.2	9.57	130.9	95.7	9.65	138.4	85.9	9.70	143.2	77.3	9.74	150.9	65.4	9.80
	93	115.3	115.3	9.58	116.1	114.7	9.68	123.1	106.7	9.76	129.9	95.2	9.83	137.3	85.5	9.89	142.0	76.9	9.93	149.7	65.0	9.99
	95	114.6	114.6	9.77	115.1	114.1	9.87	122.1	106.1	9.94	128.8	94.8	10.02	136.2	85.1	10.08	140.9	76.5	10.12	148.5	64.6	10.19
	99	113.0	113.0	10.15	113.2	112.9	10.25	120.1	105.0	10.32	126.7	93.8	10.39	133.9	84.2	10.46	138.5	75.7	10.51	146.1	63.7	10.58
	103	111.5	111.5	10.53	111.3	111.7	10.62	118.1	103.9	10.69	124.6	92.8	10.76	131.7	83.3	10.84	136.2	74.9	10.89	143.7	62.8	10.97
	106	110.4	110.4	10.81	109.9	110.8	10.90	116.6	103.0	10.97	123.0	92.0	11.04	130.0	82.6	11.12	134.5	74.3	11.18	142.0	62.2	11.26
	110	108.9	108.9	11.19	108.0	109.5	11.28	114.6	101.9	11.35	120.9	91.0	11.42	127.8	81.7	11.50	132.2	73.5	11.56	139.6	61.3	11.65
	115																					
	118																					
	122																					

TC: Evaporator Total Capacity (1,000 BTU/h) Net TC = TC - Blower input

SC: Evaporator Sensible Capacity(1,000 BTU/h) Net SC = SC - Blower input

PI: Power input(kW) Compressor + outdoor fan System PI = PI + Blower input

Note: TC and SC represent the evaporator's heat load and do not account for the blower input. To calculate the net capacity, subtract the blower input from each value.

is shown as reference data

The blank areas indicate that operation at this compressor speed is not possible under those conditions.

ID DB		85																				
ID WB		57			61			64			67			70			72			75		
ID CFM	OD DB	TC	SC	PI	TC	SC	PI	TC	SC	PI	TC	SC	PI	TC	SC	PI	TC	SC	PI	TC	SC	PI
3200 CFM	23	131.1	131.1	5.71	134.4	123.8	5.68	136.1	125.6	5.50	143.5	114.1	5.40	151.8	104.9	5.24	157.0	96.3	5.16	166.0	87.3	4.99
	30	130.9	130.9	5.76	134.2	123.7	5.73	135.9	125.4	5.54	143.3	113.9	5.43	151.5	104.7	5.28	156.7	96.2	5.20	165.9	87.3	5.07
	40	130.5	130.5	5.83	133.9	123.4	5.79	135.6	125.1	5.60	143.0	113.6	5.49	151.2	104.5	5.34	156.4	95.9	5.25	165.7	87.2	5.18
	50	130.2	130.2	5.90	133.6	123.1	5.87	135.3	124.8	5.81	142.7	113.4	5.80	150.9	104.3	5.79	156.1	95.7	5.79	165.5	87.1	5.79
	54	130.0	130.0	5.94	133.5	123.0	6.04	135.2	124.7	6.08	142.6	113.3	6.17	150.7	104.2	6.17	155.9	95.7	6.17	165.5	87.0	6.17
	58	129.9	129.9	6.32	133.2	122.8	6.42	134.9	124.5	6.45	142.3	113.1	6.54	150.5	104.1	6.55	155.6	95.5	6.55	163.5	86.0	6.56
	62	128.6	128.6	6.71	131.3	121.9	6.80	133.0	123.5	6.82	140.3	112.2	6.91	148.3	103.2	6.92	153.4	94.8	6.93	161.2	85.0	6.95
	66	127.0	127.0	7.09	129.4	120.9	7.18	131.1	122.5	7.20	138.3	111.3	7.28	146.2	102.4	7.30	151.2	94.0	7.31	158.9	84.0	7.33
	70	125.5	125.5	7.47	127.5	119.9	7.56	129.2	121.5	7.57	136.2	110.4	7.65	144.0	101.5	7.68	149.0	93.2	7.69	156.7	83.0	7.72
	72	124.7	124.7	7.66	126.6	119.3	7.74	128.2	121.0	7.75	135.2	109.9	7.84	143.0	101.1	7.87	147.9	92.8	7.89	155.5	82.5	7.91
	75	123.6	123.6	7.94	125.2	118.6	8.03	126.8	120.2	8.03	133.7	109.2	8.12	141.3	100.4	8.15	146.2	92.2	8.17	153.8	81.8	8.20
	79	122.1	122.1	8.33	123.3	117.5	8.40	124.9	119.1	8.41	131.7	108.2	8.49	139.2	99.5	8.53	144.0	91.4	8.55	151.5	80.8	8.59
	83	120.5	120.5	8.71	121.4	116.4	8.78	122.9	118.0	8.78	129.6	107.2	8.86	137.1	98.6	8.90	141.8	90.5	8.93	149.3	79.7	8.98
	87	119.0	119.0	9.09	119.5	115.3	9.16	121.0	116.9	9.15	127.6	106.2	9.23	134.9	97.7	9.28	139.6	89.7	9.31	147.0	78.7	9.37
	91	117.5	117.5	9.47	117.6	114.2	9.54	119.1	115.8	9.52	125.6	105.2	9.60	132.8	96.7	9.66	137.3	88.8	9.70	144.7	77.7	9.75
	93	116.7	116.7	9.66	116.6	113.6	9.73	118.1	115.2	9.71	124.6	104.6	9.79	131.7	96.2	9.85	136.2	88.3	9.89	143.6	77.2	9.95
	95	115.9	115.9	9.85	115.7	113.0	9.92	117.2	114.6	9.90	123.6	104.1	9.97	130.6	95.7	10.03	135.1	87.9	10.08	142.4	76.7	10.14
	99	114.4	114.4	10.23	113.8	111.8	10.29	115.2	113.4	10.27	121.5	103.0	10.34	128.5	94.7	10.41	132.9	87.0	10.46	140.2	75.6	10.53
	103	112.9	112.9	10.61	111.9	111.9	10.67	113.3	113.3	10.64	119.5	101.9	10.71	126.3	93.7	10.79	130.7	86.0	10.84	137.9	74.6	10.91
	106	111.7	111.7	10.90	110.5	110.5	10.95	111.9	111.9	10.92	118.0	101.1	10.99	124.7	93.0	11.07	129.0	85.3	11.12	136.2	73.8	11.20
	110	110.2	110.2	11.28	108.6	108.6	11.33	110.0	110.0	11.29	116.0	99.9	11.36	122.6	91.9	11.45	126.8	84.4	11.50	133.9	72.7	11.59
	115																					
	118																					
	122																					
3600 CFM	23	134.1	134.1	5.73	137.5	128.6	5.70	139.2	130.3	5.52	146.8	118.4	5.41	155.2	108.9	5.26	160.6	100.0	5.17	169.8	90.7	5.01
	30	133.9	133.9	5.78	137.3	128.4	5.74	139.0	130.1	5.56	146.6	118.2	5.45	155.0	108.7	5.30	160.3	99.8	5.21	169.7	90.6	5.08
	40	133.5	133.5	5.85	137.0	128.1	5.80	138.7	129.8	5.61	146.3	118.0	5.51	154.7	108.5	5.35	160.0	99.6	5.27	169.5	90.5	5.19
	50	133.2	133.2	5.92	136.7	127.8	5.89	138.4	129.6	5.82	146.0	117.7	5.81	154.3	108.3	5.81	159.6	99.4	5.81	169.3	90.4	5.80
	54	133.0	133.0	5.96	136.6	127.7	6.06	138.3	129.5	6.09	145.8	117.6	6.18	154.2	108.2	6.19	159.5	99.3	6.19	169.3	90.4	6.19
	58	132.9	132.9	6.34	136.3	127.5	6.44	138.0	129.3	6.47	145.6	117.4	6.56	153.9	108.0	6.56	159.2	99.1	6.57	167.2	89.3	6.58
	62	131.5	131.5	6.72	134.4	126.5	6.82	136.1	128.2	6.84	143.5	116.5	6.93	151.7	107.2	6.94	156.9	98.4	6.95	164.9	88.3	6.96
	66	130.0	130.0	7.11	132.4	125.5	7.20	134.1	127.2	7.21	141.4	115.6	7.30	149.5	106.3	7.32	154.7	97.6	7.33	162.6	87.2	7.35
	70	128.4	128.4	7.49	130.5	124.4	7.58	132.1	126.1	7.59	139.4	114.6	7.67	147.3	105.4	7.70	152.4	96.7	7.72	160.3	86.2	7.74
	72	127.6	127.6	7.68	129.5	123.9	7.76	131.2	125.6	7.77	138.3	114.1	7.86	146.2	104.9	7.89	151.3	96.3	7.91	159.1	85.7	7.93
	75	126.4	126.4	7.97	128.1	123.1	8.05	129.7	124.8	8.06	136.8	113.4	8.14	144.6	104.3	8.17	149.6	95.7	8.19	157.3	84.9	8.23
	79	124.9	124.9	8.35	126.1	122.0	8.43	127.7	123.7	8.43	134.7	112.3	8.51	142.4	103.3	8.55	147.3	94.8	8.57	155.0	83.8	8.61
	83	123.3	123.3	8.73	124.2	120.8	8.81	125.8	122.5	8.80	132.6	111.3	8.88	140.2	102.4	8.93	145.0	94.0	8.96	152.7	82.8	9.00
	87	121.7	121.7	9.11	122.2	119.7	9.18	123.8	121.3	9.18	130.5	110.2	9.25	138.0	101.4	9.30	142.8	93.1	9.34	150.4	81.7	9.39
	91	120.2	120.2	9.49	120.3	118.5	9.56	121.8	120.2	9.55	128.5	109.2	9.63	135.8	100.4	9.68	140.5	92.2	9.72	148.0	80.7	9.78
	93	119.4	119.4	9.68	119.3	117.9	9.75	120.8	119.6	9.74	127.4	108.6	9.81	134.7	99.9	9.87	139.4	91.7	9.91	146.9	80.1	9.97
	95	118.6	118.6	9.88	118.3	117.3	9.94	119.9	118.9	9.92	126.4	108.1	10.00	133.6	99.4	10.06	138.2	91.2	10.10	145.7	79.6	10.17
	99	117.0	117.0	10.26	116.4	116.1	10.32	117.9	117.7	10.30	124.3	106.9	10.37	131.4	98.3	10.44	136.0	90.3	10.48	143.4	78.5	10.55
	103	115.5	115.5	10.64	114.5	114.5	10.70	115.9	115.9	10.67	122.2	105.8	10.74	129.2	97.3	10.82	133.7	89.3	10.87	141.1	77.4	10.94
	106	114.3	114.3	10.93	113.0	113.0	10.98	114.5	114.5	10.95	120.7	104.9	11.02	127.6	96.5	11.10	132.0	88.6	11.15	139.3	76.6	11.23
	110	112.7	112.7	11.31	111.1	111.1	11.36	112.5	112.5	11.32	118.6	103.7	11.39	125.4	95.4	11.48	129.7	87.6	11.54	137.0	75.5	11.62
	115																					
	118																					
	122																					
4000 CFM	23	136.7	136.7	5.74	140.1	133.2	5.71	141.9	135.0	5.53	149.6	122.7	5.42	158.2	112.8	5.27	163.6	103.6	5.18	173.1	93.9	5.02
	30	136.4	136.4	5.79	139.9	133.0	5.75	141.7	134.8	5.57	149.4	122.5	5.46	158.0	112.6	5.31	163.4	103.4	5.22	172.9	93.9	5.09
	40	136.1	136.1	5.86	139.6	132.7	5.81	141.4	134.5	5.63	149.1	122.2	5.52	157.6	112.4	5.36	163.0	103.2	5.28	172.7	93.8	5.21
	50	135.7	135.7	5.93	139.3	132.4	5.90	141.1	134.2	5.83	148.8	121.9	5.82	157.3	112.2	5.82	162.7	103.0	5.82	172.6	93.6	5.81
	54	135.6	135.6	5.97	139.2	132.3	6.07	140.9	134.1	6.11	148.6	121.8	6.20	157.1	112.1	6.20	162.5	102.9	6.20	172.5	93.6	6.20
	58	135.4	135.4	6.36	138.9	132.1	6.45	140.7	133.9	6.48	148.3	121.7	6.57	156.8	111.9	6.58	162.2	102.7	6.58	170.4	92.5	6.59
	62	134.0	134.0	6.74	136.9	131.1	6.83	138.7	132.9	6.86	146.2	120.7	6.94	154.6	111.0	6.96	159.9	101.9	6.97	168.0	91.4	6.98
	66	132.4	132.4	7.12	134.9	130.0	7.21	136.7	131.8	7.23	144.1	119.7	7.32	152.4	110.1	7.34	157.6	101.1	7.35	165.7	90.4	7.37
	70	130.8	130.8	7.50	133.0	128.9	7.59	134.7	130.7	7.60	142.0	118.7	7.69	150.1	109.2	7.71	155.3	100.2	7.73	163.3	89.3	7.76
	72	130.0	130.0	7.70	132.0	128.3	7.78	133.7	130.1	7.79	141.0	118.2	7.87	149.0	108.7	7.90	154.1	99.8	7.92	162.1	88.8	7.95
	75	128.8	128.8	7.98	130.5	127.5	8.07	132.2	129.3	8.07	139.4	117.4	8.15	147.3	108.0	8.19	152.4	99.1	8.21	160.3	87.9	8.24
	79	127.2	127.2	8.37	128.5	126.4	8.44	130.2	128.1	8.45	137.3	116.4	8.53	145.1	107.0	8.57	150.1	98.3	8.59	158.0	86.9	8.63
	83	125.6	125.6	8.75	126.5	125.2	8.82	128.2	126.9	8.82	135.1	115.3	8.90	142.9	106.1	8.95	147.8	97.3	8.98	155.6	85.8	9.02
	87	124.0	124.0	9.13	124.6	124.0	9.20	126.1	125.7	9.20	133.0	114.2	9.27	140.6	105.0	9.32	145.5	96.4	9.36	153.2	84.7	9.41
	91	122.4	122.4	9.51	122.6	122.8	9.58	124.1	124.5	9.57	130.9	113.1	9.65	138.4	104.0	9.70	143.2	95.5	9.74	150.9	83.6	9.80
	93	121.6	121.6	9.71	121.6	122.2	9.77	123.1	123.9	9.76	129.9	112.5	9.83	137.3	103.5	9.89	142.0	95.0	9.93	149.7	83.0	9.99
	95	120.8	120.8	9.90	120.6	121.5	9.96	122.1	123.2	9.94	128.8	111.9	10.02	136.2	103.0	10.08	140.9	94.5	10.12	148.5	82.4	10.19
	99	119.2	119.2	10.28	118.6	120.3	10.34	120.1	121.9	10.32	126.7	110.8	10.39	133.9	101.9	10.46	138.5	93.5	10.51	146.1	81.3	10.58
	103	117.6	117.6	10.66	116.6	116.6	10.72	118.1	118.1	10.69	124.6	109.6	10.76	131.7	100.8	10.84	136.2	92.5	10.89	143.7	80.2	10.97
	106	116.4	116.4	10.95	115.2	115.2	11.01	116.6	116.6	10.97	123.0	108.7	11.04	130.0	100.0	11.12	134.5	91.8	11.18	142.0	79.4	11.26
	110	114.9	114.9	11.33	113.2	113.2	11.39	114.6	114.6	11.35	120.9	107.5	11.42	127.8	98.8	11.50	132.2	90.7	11.56	139.6	78.2	11.65
	115																					
	118																					
	122																					

TC: Evaporator Total Capacity (1,000 BTU/h) Net TC = TC - Blower input

SC: Evaporator Sensible Capacity(1,000 BTU/h) Net SC = SC - Blower input

PI: Power input(kW) Compressor + outdoor fan System PI = PI + Blower input

Note: TC and SC represent the evaporator's heat load and do not account for the blower input. To calculate the net capacity, subtract the blower input from each value.

is shown as reference data

The blank areas indicate that operation at this compressor speed is not possible under those conditions.

Model #	Min Airflow	EHXD-3M15	EHXD-3M30	EHXD-3M45	EHXD-4M15	EHXD-4M30	EHXD-4M45
DVH0903	2500	X	X	X			
DVH0904					X	X	X
DVH1023	2750	X	X	X			
DVH1024					X	X	X
DVH1023	3200	X	X	X			
DVH1204					X	X	X

Down Flow Sandard Static
7.5 Ton

CFM	0.2			0.4			0.6			0.8			1.0		
	RPM	SPEED %	POWER INPUT	RPM	SPEED %	POWER INPUT	RPM	SPEED %	POWER INPUT	RPM	SPEED %	POWER INPUT	RPM	SPEED %	POWER INPUT
1400	445	21.8%	211.8	552	25.4%	309.9	651	28.5%	427.7	713	30.1%	489.3	796	33.1%	620.2
1600	459	23.9%	243.5	568	27.7%	354.6	669	30.9%	486.7	744	33.4%	592.3	821	36.2%	720.9
1800	473	26.1%	280.4	583	29.9%	402.7	685	33.3%	547.0	769	36.4%	687.5	842	39.1%	819.5
2000	489	28.4%	323.2	598	32.3%	454.8	700	35.6%	609.6	789	39.3%	777.1	860	41.9%	917.1
2200	505	30.9%	372.9	612	34.6%	511.8	714	38.0%	675.7	805	42.0%	863.0	876	44.8%	1015.3
2400	522	33.6%	430.3	627	37.1%	575.0	728	40.5%	746.6	819	44.6%	947.7	890	47.7%	1115.4
2600	541	36.4%	496.7	643	39.8%	645.7	741	43.2%	823.6	831	47.3%	1033.4	903	50.7%	1219.1
2800	561	39.5%	573.1	658	42.7%	725.3	753	46.0%	908.4	842	50.0%	1122.4	914	53.8%	1327.7
3000	582	42.8%	660.6	675	45.8%	815.3	766	49.1%	1002.4	851	52.9%	1217.3	924	57.1%	1442.8
3200	605	46.4%	760.5	692	49.2%	917.5	778	52.5%	1107.5	860	56.1%	1320.3	933	60.6%	1565.7
3400	629	50.2%	873.7	710	52.9%	1033.3	791	56.2%	1225.3	868	59.5%	1434.2	942	64.4%	1697.7
3600	655	54.4%	1001.3	729	57.0%	1164.5	803	60.2%	1357.5	876	63.4%	1561.3	950	68.5%	1839.8
CFM	1.2			1.4			1.6			1.8			2.0		
	RPM	SPEED %	POWER INPUT	RPM	SPEED %	POWER INPUT	RPM	SPEED %	POWER INPUT	RPM	SPEED %	POWER INPUT	RPM	SPEED %	POWER INPUT
1400	848	34.9%	706.6	886	35.8%	758.2	-	-	-	-	-	-	-	-	-
1600	869	37.9%	807.4	904	38.6%	852.9	-	-	-	-	-	-	-	-	-
1800	890	40.9%	913.2	923	41.6%	961.5	-	-	-	-	-	-	-	-	-
2000	909	44.0%	1024.0	944	44.8%	1084.0	-	-	-	-	-	-	-	-	-
2200	927	47.1%	1140.1	965	48.2%	1220.1	-	-	-	-	-	-	-	-	-
2400	945	50.3%	1261.8	988	51.8%	1368.8	-	-	-	-	-	-	-	-	-
2600	961	53.6%	1389.3	1011	55.5%	1528.8	-	-	-	-	-	-	-	-	-
2800	976	57.1%	1522.5	1033	59.4%	1698.0	-	-	-	-	-	-	-	-	-
3000	991	60.6%	1661.3	1054	63.5%	1873.6	-	-	-	-	-	-	-	-	-
3200	1003	64.4%	1805.3	1073	67.8%	2052.3	-	-	-	-	-	-	-	-	-
3400	1015	68.3%	1953.7	1088	72.2%	2229.7	-	-	-	-	-	-	-	-	-
3600	1024	72.5%	2105.1	1099	76.8%	2400.8	-	-	-	-	-	-	-	-	-

8.5 Ton

CFM	0.2			0.4			0.6			0.8			1.0		
	RPM	SPEED %	POWER INPUT	RPM	SPEED %	POWER INPUT	RPM	SPEED %	POWER INPUT	RPM	SPEED %	POWER INPUT	RPM	SPEED %	POWER INPUT
1600	459	23.9%	243.5	568	27.7%	354.6	669	30.9%	486.7	744	33.4%	592.3	821	36.2%	720.9
1800	473	26.1%	280.4	583	29.9%	402.7	685	33.3%	547.0	769	36.4%	687.5	842	39.1%	819.5
2000	489	28.4%	323.2	598	32.3%	454.8	700	35.6%	609.6	789	39.3%	777.1	860	41.9%	917.1
2200	505	30.9%	372.9	612	34.6%	511.8	714	38.0%	675.7	805	42.0%	863.0	876	44.8%	1015.3
2400	522	33.6%	430.3	627	37.1%	575.0	728	40.5%	746.6	819	44.6%	947.7	890	47.7%	1115.4
2600	541	36.4%	496.7	643	39.8%	645.7	741	43.2%	823.6	831	47.3%	1033.4	903	50.7%	1219.1
2800	561	39.5%	573.1	658	42.7%	725.3	753	46.0%	908.4	842	50.0%	1122.4	914	53.8%	1327.7
3000	582	42.8%	660.6	675	45.8%	815.3	766	49.1%	1002.4	851	52.9%	1217.3	924	57.1%	1442.8
3200	605	46.4%	760.5	692	49.2%	917.5	778	52.5%	1107.5	860	56.1%	1320.3	933	60.6%	1565.7
3400	629	50.2%	873.7	710	52.9%	1033.3	791	56.2%	1225.3	868	59.5%	1434.2	942	64.4%	1697.7
3600	655	54.4%	1001.3	729	57.0%	1164.5	803	60.2%	1357.5	876	63.4%	1561.3	950	68.5%	1839.8
3800	681	58.9%	1143.7	749	61.5%	1312.1	817	64.7%	1505.6	885	67.7%	1704.4	957	73.0%	1992.7

CFM	1.2			1.4			1.6			1.8			2.0		
	RPM	SPEED %	POWER INPUT	RPM	SPEED %	POWER INPUT	RPM	SPEED %	POWER INPUT	RPM	SPEED %	POWER INPUT	RPM	SPEED %	POWER INPUT
1600	869	37.9%	807.4	904	38.6%	852.9	-	-	-	-	-	-	-	-	-
1800	890	40.9%	913.2	923	41.6%	961.5	-	-	-	-	-	-	-	-	-
2000	909	44.0%	1024.0	944	44.8%	1084.0	-	-	-	-	-	-	-	-	-
2200	927	47.1%	1140.1	965	48.2%	1220.1	-	-	-	-	-	-	-	-	-
2400	945	50.3%	1261.8	988	51.8%	1368.8	-	-	-	-	-	-	-	-	-
2600	961	53.6%	1389.3	1011	55.5%	1528.8	-	-	-	-	-	-	-	-	-
2800	976	57.1%	1522.5	1033	59.4%	1698.0	-	-	-	-	-	-	-	-	-
3000	991	60.6%	1661.3	1054	63.5%	1873.6	-	-	-	-	-	-	-	-	-
3200	1003	64.4%	1805.3	1073	67.8%	2052.3	-	-	-	-	-	-	-	-	-
3400	1015	68.3%	1953.7	1088	72.2%	2229.7	-	-	-	-	-	-	-	-	-
3600	1024	72.5%	2105.1	1099	76.8%	2400.8	-	-	-	-	-	-	-	-	-
3800	1031	76.9%	2257.4	1104	81.5%	2559.4	-	-	-	-	-	-	-	-	-

10 Ton

CFM	0.2			0.4			0.6			0.8			1.0		
	RPM	SPEED %	POWER INPUT	RPM	SPEED %	POWER INPUT	RPM	SPEED %	POWER INPUT	RPM	SPEED %	POWER INPUT	RPM	SPEED %	POWER INPUT
1800	473	26.1%	280.4	583	29.9%	402.7	685	33.3%	547.0	769	36.4%	687.5	842	39.1%	819.5
2000	489	28.4%	323.2	598	32.3%	454.8	700	35.6%	609.6	789	39.3%	777.1	860	41.9%	917.1
2200	505	30.9%	372.9	612	34.6%	511.8	714	38.0%	675.7	805	42.0%	863.0	876	44.8%	1015.3
2400	522	33.6%	430.3	627	37.1%	575.0	728	40.5%	746.6	819	44.6%	947.7	890	47.7%	1115.4
2600	541	36.4%	496.7	643	39.8%	645.7	741	43.2%	823.6	831	47.3%	1033.4	903	50.7%	1219.1
2800	561	39.5%	573.1	658	42.7%	725.3	753	46.0%	908.4	842	50.0%	1122.4	914	53.8%	1327.7
3000	582	42.8%	660.6	675	45.8%	815.3	766	49.1%	1002.4	851	52.9%	1217.3	924	57.1%	1442.8
3200	605	46.4%	760.5	692	49.2%	917.5	778	52.5%	1107.5	860	56.1%	1320.3	933	60.6%	1565.7
3400	629	50.2%	873.7	710	52.9%	1033.3	791	56.2%	1225.3	868	59.5%	1434.2	942	64.4%	1697.7
3600	655	54.4%	1001.3	729	57.0%	1164.5	803	60.2%	1357.5	876	63.4%	1561.3	950	68.5%	1839.8
3800	681	58.9%	1143.7	749	61.5%	1312.1	817	64.7%	1505.6	885	67.7%	1704.4	957	73.0%	1992.7
4000	708	63.7%	1301.3	770	66.4%	1477.2	831	69.6%	1670.9	894	72.5%	1865.8	966	77.9%	2156.6
4200	736	68.9%	1473.6	793	71.8%	1659.9	849	75.1%	1854.2	908	77.9%	2048.1	976	83.2%	2331.0
4400	763	74.5%	1659.3	818	77.8%	1859.1	871	81.0%	2055.7	928	84.0%	2253.7	990	89.1%	2514.5
4600	789	80.6%	1856.2	845	84.3%	2072.5	901	87.6%	2274.5						
4800	813	87.0%	2060.3												

CFM	1.2			1.4			1.6			1.8			2.0		
	RPM	SPEED %	POWER INPUT	RPM	SPEED %	POWER INPUT	RPM	SPEED %	POWER INPUT	RPM	SPEED %	POWER INPUT	RPM	SPEED %	POWER INPUT
1800	890	40.9%	913.2	923	41.6%	961.5	-	-	-	-	-	-	-	-	-
2000	909	44.0%	1024.0	944	44.8%	1084.0	-	-	-	-	-	-	-	-	-
2200	927	47.1%	1140.1	965	48.2%	1220.1	-	-	-	-	-	-	-	-	-
2400	945	50.3%	1261.8	988	51.8%	1368.8	-	-	-	-	-	-	-	-	-
2600	961	53.6%	1389.3	1011	55.5%	1528.8	-	-	-	-	-	-	-	-	-
2800	976	57.1%	1522.5	1033	59.4%	1698.0	-	-	-	-	-	-	-	-	-
3000	991	60.6%	1661.3	1054	63.5%	1873.6	-	-	-	-	-	-	-	-	-
3200	1003	64.4%	1805.3	1073	67.8%	2052.3	-	-	-	-	-	-	-	-	-
3400	1015	68.3%	1953.7	1088	72.2%	2229.7	-	-	-	-	-	-	-	-	-
3600	1024	72.5%	2105.1	1099	76.8%	2400.8	-	-	-	-	-	-	-	-	-
3800	1031	76.9%	2257.4	1104	81.5%	2559.4	-	-	-	-	-	-	-	-	-
4000	1036	81.6%	2407.7	1101	86.4%	2698.6	-	-	-	-	-	-	-	-	-
4200	1038	86.5%	2551.9				-	-	-	-	-	-	-	-	-

Down Flow High Static

7.5 Ton

CFM	0.2			0.4			0.6			0.8			1.0		
	RPM	SPEED %	POWER INPUT	RPM	SPEED %	POWER INPUT	RPM	SPEED %	POWER INPUT	RPM	SPEED %	POWER INPUT	RPM	SPEED %	POWER INPUT
1800	473	26.1%	280.4	583	29.9%	402.7	685	33.3%	547.0	769	36.4%	687.5	842	39.1%	819.5
2000	489	28.4%	323.2	598	32.3%	454.8	700	35.6%	609.6	789	39.3%	777.1	860	41.9%	917.1
2200	505	30.9%	372.9	612	34.6%	511.8	714	38.0%	675.7	805	42.0%	863.0	876	44.8%	1015.3
2400	522	33.6%	430.3	627	37.1%	575.0	728	40.5%	746.6	819	44.6%	947.7	890	47.7%	1115.4
2600	541	36.4%	496.7	643	39.8%	645.7	741	43.2%	823.6	831	47.3%	1033.4	903	50.7%	1219.1
2800	561	39.5%	573.1	658	42.7%	725.3	753	46.0%	908.4	842	50.0%	1122.4	914	53.8%	1327.7
3000	582	42.8%	660.6	675	45.8%	815.3	766	49.1%	1002.4	851	52.9%	1217.3	924	57.1%	1442.8
3200	605	46.4%	760.5	692	49.2%	917.5	778	52.5%	1107.5	860	56.1%	1320.3	933	60.6%	1565.7
3400	629	50.2%	873.7	710	52.9%	1033.3	791	56.2%	1225.3	868	59.5%	1434.2	942	64.4%	1697.7
3600	655	54.4%	1001.3	729	57.0%	1164.5	803	60.2%	1357.5	876	63.4%	1561.3	950	68.5%	1839.8
3800	681	58.9%	1143.7	749	61.5%	1312.1	817	64.7%	1505.6	885	67.7%	1704.4	957	73.0%	1992.7
CFM	1.2			1.4			1.6			1.8			2.0		
	RPM	SPEED %	POWER INPUT	RPM	SPEED %	POWER INPUT	RPM	SPEED %	POWER INPUT	RPM	SPEED %	POWER INPUT	RPM	SPEED %	POWER INPUT
1800	890	40.9%	913.2	923	41.6%	961.5	975	44.1%	1088.3	1039	46.8%	1249.8	1070	48.0%	1349.1
2000	909	44.0%	1024.0	944	44.8%	1084.0	994	47.4%	1217.9	1056	50.0%	1383.8	1082	51.3%	1462.3
2200	927	47.1%	1140.1	965	48.2%	1220.1	1015	50.9%	1361.6	1073	53.5%	1529.9	1097	54.8%	1599.4
2400	945	50.3%	1261.8	988	51.8%	1368.8	1036	54.6%	1519.5	1091	57.2%	1689.3	1115	58.6%	1761.9
2600	961	53.6%	1389.3	1011	55.5%	1528.8	1058	58.5%	1691.2	1109	61.2%	1863.2	1135	62.7%	1949.8
2800	976	57.1%	1522.5	1033	59.4%	1698.0	1081	62.7%	1875.7	1127	65.5%	2051.9	1158	67.3%	2161.7
3000	991	60.6%	1661.3	1054	63.5%	1873.6	1103	67.1%	2071.1	1146	70.1%	2255.4	1183	72.2%	2393.3
3200	1003	64.4%	1805.3	1073	67.8%	2052.3	1124	71.8%	2274.3	1165	75.1%	2472.3	1207	77.5%	2636.7
3400	1015	68.3%	1953.7	1088	72.2%	2229.7	1142	76.8%	2480.8	1185	80.5%	2700.0	1228	83.3%	2878.2
3600	1024	72.5%	2105.1	1099	76.8%	2400.8	1157	82.2%	2684.2	1204	86.4%	2933.4	1242	89.6%	3097.5
3800	1031	76.9%	2257.4	1104	81.5%	2559.4	1165	87.8%	2875.7						

8.5 Ton

CFM	0.2			0.4			0.6			0.8			1.0		
	RPM	SPEED %	POWER INPUT	RPM	SPEED %	POWER INPUT	RPM	SPEED %	POWER INPUT	RPM	SPEED %	POWER INPUT	RPM	SPEED %	POWER INPUT
1800	480	21.9%	280.1	582	22.8%	351.7	704	24.5%	552.8	759	25.9%	647.2	805	27.2%	725.0
2000	498	23.3%	327.6	600	24.5%	425.4	718	26.7%	633.4	776	28.1%	743.3	830	29.7%	857.5
2200	516	24.7%	381.2	618	26.2%	502.6	731	28.7%	716.3	792	30.2%	840.6	852	32.1%	986.1
2400	536	26.2%	441.8	636	28.0%	583.9	743	30.7%	801.4	806	32.2%	939.2	871	34.2%	1111.3
2600	556	27.9%	510.4	654	29.8%	670.3	755	32.5%	889.0	820	34.1%	1039.9	888	36.3%	1234.1
2800	577	29.6%	588.0	672	31.7%	762.9	768	34.4%	980.1	834	36.0%	1143.7	903	38.2%	1356.3
3000	599	31.5%	675.7	690	33.6%	862.7	780	36.2%	1076.1	847	37.9%	1252.3	918	40.2%	1480.1
3200	622	33.5%	774.8	709	35.6%	971.2	793	38.1%	1178.9	861	39.8%	1367.6	932	42.1%	1608.0
3400	646	35.7%	886.5	728	37.7%	1089.8	806	40.0%	1290.7	875	41.8%	1491.8	946	44.2%	1742.9
3600	671	38.0%	1012.2	749	40.0%	1220.0	821	42.1%	1414.1	889	43.9%	1627.5	960	46.3%	1887.7
3800	697	40.5%	1153.3	770	42.4%	1363.5	836	44.3%	1551.8	904	46.2%	1777.2	974	48.5%	2045.6
4000	724	43.1%	1311.1	792	45.0%	1522.0	853	46.7%	1706.8	920	48.6%	1944.0	989	51.0%	2220.1
4200	751	45.9%	1487.0	815	47.7%	1697.5	871	49.3%	1882.5	937	51.3%	2130.6	1004	53.7%	2414.6

CFM	1.2			1.4			1.6			1.8			2.0		
	RPM	SPEED %	POWER INPUT	RPM	SPEED %	POWER INPUT	RPM	SPEED %	POWER INPUT	RPM	SPEED %	POWER INPUT	RPM	SPEED %	POWER INPUT
1800	863	29.4%	871.9	912	30.6%	979.0	983	32.5%	1163.8	1031	33.8%	1296.1	1064	34.7%	1382.0
2000	891	31.9%	1025.6	940	32.8%	1138.1	1001	34.5%	1301.0	1046	35.7%	1432.0	1079	36.6%	1525.8
2200	915	34.2%	1172.8	964	35.0%	1292.3	1019	36.5%	1444.6	1063	37.8%	1580.9	1096	38.8%	1687.0
2400	937	36.4%	1314.7	986	37.2%	1443.3	1037	38.6%	1595.3	1080	40.0%	1742.9	1115	41.2%	1865.4
2600	955	38.5%	1453.2	1005	39.3%	1593.2	1054	40.8%	1753.6	1097	42.3%	1917.7	1134	43.6%	2060.5
2800	972	40.5%	1590.4	1023	41.5%	1743.7	1071	43.1%	1920.2	1116	44.7%	2105.2	1155	46.3%	2271.6
3000	988	42.5%	1728.8	1039	43.6%	1896.7	1088	45.4%	2095.6	1134	47.3%	2304.7	1176	49.0%	2497.3
3200	1002	44.5%	1871.0	1053	45.9%	2054.3	1104	47.9%	2280.4	1153	50.0%	2515.9	1197	51.9%	2736.4
3400	1016	46.6%	2019.8	1067	48.2%	2218.2	1120	50.5%	2475.2	1171	52.8%	2737.9	1219	54.8%	2987.0
3600	1030	48.8%	2178.4	1080	50.6%	2390.7	1136	53.2%	2680.6	1189	55.7%	2969.9	1239	57.9%	3246.9
3800	1043	51.2%	2349.5	1092	53.1%	2573.8	1151	56.0%	2897.1	1206	58.7%	3210.8	1258	61.0%	3514.0
4000	1057	53.7%	2536.4	1103	55.8%	2769.7	1165	59.0%	3125.1	1221	61.8%	3459.4	1275	64.3%	3785.4
4200	1070	56.5%	2742.1	1115	58.7%	2980.9	1179	62.0%	3365.1	1236	64.9%	3714.3	1290	67.5%	4058.5

10 Ton

CFM	0.2			0.4			0.6			0.8			1.0		
	RPM	SPEED %	POWER INPUT	RPM	SPEED %	POWER INPUT	RPM	SPEED %	POWER INPUT	RPM	SPEED %	POWER INPUT	RPM	SPEED %	POWER INPUT
1800	480	21.9%	280.1	582	22.8%	351.7	704	24.5%	552.8	759	25.9%	647.2	805	27.2%	725.0
2000	498	23.3%	327.6	600	24.5%	425.4	718	26.7%	633.4	776	28.1%	743.3	830	29.7%	857.5
2200	516	24.7%	381.2	618	26.2%	502.6	731	28.7%	716.3	792	30.2%	840.6	852	32.1%	986.1
2400	536	26.2%	441.8	636	28.0%	583.9	743	30.7%	801.4	806	32.2%	939.2	871	34.2%	1111.3
2600	556	27.9%	510.4	654	29.8%	670.3	755	32.5%	889.0	820	34.1%	1039.9	888	36.3%	1234.1
2800	577	29.6%	588.0	672	31.7%	762.9	768	34.4%	980.1	834	36.0%	1143.7	903	38.2%	1356.3
3000	599	31.5%	675.7	690	33.6%	862.7	780	36.2%	1076.1	847	37.9%	1252.3	918	40.2%	1480.1
3200	622	33.5%	774.8	709	35.6%	971.2	793	38.1%	1178.9	861	39.8%	1367.6	932	42.1%	1608.0
3400	646	35.7%	886.5	728	37.7%	1089.8	806	40.0%	1290.7	875	41.8%	1491.8	946	44.2%	1742.9
3600	671	38.0%	1012.2	749	40.0%	1220.0	821	42.1%	1414.1	889	43.9%	1627.5	960	46.3%	1887.7
3800	697	40.5%	1153.3	770	42.4%	1363.5	836	44.3%	1551.8	904	46.2%	1777.2	974	48.5%	2045.6
4000	724	43.1%	1311.1	792	45.0%	1522.0	853	46.7%	1706.8	920	48.6%	1944.0	989	51.0%	2220.1
4200	751	45.9%	1487.0	815	47.7%	1697.5	871	49.3%	1882.5	937	51.3%	2130.6	1004	53.7%	2414.6
4400	779	49.0%	1682.3	838	50.7%	1891.9	891	52.2%	2082.0	955	54.2%	2340.1	1020	56.7%	2632.3
4600	808	52.2%	1898.2	863	53.9%	2107.2	913	55.4%	2308.7	974	57.4%	2575.0	1036	60.0%	2876.4
4800	837	55.6%	2135.5	889	57.3%	2345.4	937	58.9%	2565.4	995	61.0%	2837.6	1053	63.7%	3149.5
5000	866	59.3%	2394.9	915	61.0%	2608.4	963	62.8%	2854.3	1016	64.9%	3129.2	1071	67.7%	3453.3

CFM	1.2			1.4			1.6			1.8			2.0		
	RPM	SPEED %	POWER INPUT	RPM	SPEED %	POWER INPUT	RPM	SPEED %	POWER INPUT	RPM	SPEED %	POWER INPUT	RPM	SPEED %	POWER INPUT
1800	863	29.4%	871.9	912	30.6%	979.0	983	32.5%	1163.8	1031	33.8%	1296.1	1064	34.7%	1382.0
2000	891	31.9%	1025.6	940	32.8%	1138.1	1001	34.5%	1301.0	1046	35.7%	1432.0	1079	36.6%	1525.8
2200	915	34.2%	1172.8	964	35.0%	1292.3	1019	36.5%	1444.6	1063	37.8%	1580.9	1096	38.8%	1687.0
2400	937	36.4%	1314.7	986	37.2%	1443.3	1037	38.6%	1595.3	1080	40.0%	1742.9	1115	41.2%	1865.4
2600	955	38.5%	1453.2	1005	39.3%	1593.2	1054	40.8%	1753.6	1097	42.3%	1917.7	1134	43.6%	2060.5
2800	972	40.5%	1590.4	1023	41.5%	1743.7	1071	43.1%	1920.2	1116	44.7%	2105.2	1155	46.3%	2271.6
3000	988	42.5%	1728.8	1039	43.6%	1896.7	1088	45.4%	2095.6	1134	47.3%	2304.7	1176	49.0%	2497.3
3200	1002	44.5%	1871.0	1053	45.9%	2054.3	1104	47.9%	2280.4	1153	50.0%	2515.9	1197	51.9%	2736.4
3400	1016	46.6%	2019.8	1067	48.2%	2218.2	1120	50.5%	2475.2	1171	52.8%	2737.9	1219	54.8%	2987.0
3600	1030	48.8%	2178.4	1080	50.6%	2390.7	1136	53.2%	2680.6	1189	55.7%	2969.9	1239	57.9%	3246.9
3800	1043	51.2%	2349.5	1092	53.1%	2573.8	1151	56.0%	2897.1	1206	58.7%	3210.8	1258	61.0%	3514.0
4000	1057	53.7%	2536.4	1103	55.8%	2769.7	1165	59.0%	3125.1	1221	61.8%	3459.4	1275	64.3%	3785.4
4200	1070	56.5%	2742.1	1115	58.7%	2980.9	1179	62.0%	3365.1	1236	64.9%	3714.3	1290	67.5%	4058.5
4400	1083	59.5%	2969.2	1126	61.8%	3210.0	1192	65.3%	3617.5	1248	68.2%	3974.2	1301	70.8%	4330.3
4600	1097	62.9%	3220.4	1137	65.1%	3459.8	1204	68.7%	3882.5	1258	71.5%	4237.1	1309	74.2%	4597.8
4800	1110	66.6%	3497.5	1150	68.7%	3733.7	1215	72.2%	4160.3	1266	74.9%	4501.5	1313	77.6%	4858.0
5000	1124	70.7%	3801.5	1165	72.6%	4035.3	1226	75.9%	4450.9	1271	78.4%	4765.3	1312	80.9%	5107.8

Horizontal Flow Standard Static

7.5 Ton

CFM	0.2			0.4			0.6			0.8			1.0		
	RPM	SPEED %	POWER INPUT	RPM	SPEED %	POWER INPUT	RPM	SPEED %	POWER INPUT	RPM	SPEED %	POWER INPUT	RPM	SPEED %	POWER INPUT
1400	442	21.5%	194.1	551	25.1%	290.0	651	28.4%	406.0	693	28.9%	428.6	795	33.1%	595.0
1600	457	23.6%	225.7	568	27.4%	336.7	667	30.7%	461.2	729	32.4%	538.1	816	35.8%	684.2
1800	472	25.9%	263.1	585	29.8%	387.2	683	33.0%	519.2	759	35.7%	640.2	836	38.5%	775.8
2000	489	28.3%	307.0	601	32.2%	442.1	698	35.3%	581.0	782	38.7%	736.9	854	41.3%	870.5
2200	507	30.8%	358.2	617	34.7%	502.3	713	37.7%	647.6	802	41.6%	829.9	870	44.1%	969.1
2400	526	33.6%	417.9	634	37.3%	568.8	727	40.3%	720.3	818	44.5%	921.6	886	47.0%	1072.5
2600	547	36.5%	487.0	650	40.1%	642.7	742	43.0%	800.3	833	47.3%	1014.0	901	50.1%	1181.4
2800	569	39.7%	566.6	667	43.1%	725.5	756	46.0%	889.0	845	50.2%	1109.5	915	53.3%	1296.7
3000	592	43.1%	657.8	685	46.2%	818.5	770	49.1%	987.7	857	53.3%	1210.4	929	56.7%	1419.0
3200	616	46.8%	761.5	704	49.7%	923.1	785	52.6%	1098.0	867	56.5%	1319.1	941	60.4%	1548.9
3400	642	50.7%	878.8	723	53.4%	1040.9	800	56.4%	1221.2	877	60.1%	1438.1	952	64.2%	1686.7
3600	669	54.9%	1010.3	742	57.5%	1173.1	815	60.5%	1358.6	887	64.0%	1569.8	963	68.4%	1832.4
CFM	1.2			1.4			1.6			1.8			2.0		
	RPM	SPEED %	POWER INPUT	RPM	SPEED %	POWER INPUT	RPM	SPEED %	POWER INPUT	RPM	SPEED %	POWER INPUT	RPM	SPEED %	POWER INPUT
1400	844	34.5%	665.8	888	35.7%	734.5	-	-	-	-	-	-	-	-	-
1600	861	37.1%	750.2	903	38.3%	821.0	-	-	-	-	-	-	-	-	-
1800	879	39.8%	845.7	920	41.2%	923.2	-	-	-	-	-	-	-	-	-
2000	898	42.8%	952.4	939	44.3%	1041.1	-	-	-	-	-	-	-	-	-
2200	917	45.9%	1069.9	960	47.8%	1174.0	-	-	-	-	-	-	-	-	-
2400	936	49.3%	1197.7	982	51.4%	1320.9	-	-	-	-	-	-	-	-	-
2600	955	52.8%	1335.0	1004	55.3%	1480.1	-	-	-	-	-	-	-	-	-
2800	973	56.4%	1480.3	1026	59.4%	1649.0	-	-	-	-	-	-	-	-	-
3000	989	60.3%	1632.2	1048	63.6%	1824.8	-	-	-	-	-	-	-	-	-
3200	1005	64.3%	1788.4	1067	68.0%	2003.7	-	-	-	-	-	-	-	-	-
3400	1018	68.4%	1946.8	1083	72.5%	2181.8	-	-	-	-	-	-	-	-	-
3600	1030	72.6%	2104.4	1095	77.1%	2354.7	-	-	-	-	-	-	-	-	-

8.5 Ton

CFM	0.2			0.4			0.6			0.8			1.0		
	RPM	SPEED %	POWER INPUT	RPM	SPEED %	POWER INPUT	RPM	SPEED %	POWER INPUT	RPM	SPEED %	POWER INPUT	RPM	SPEED %	POWER INPUT
1600	457	23.6%	225.7	568	27.4%	336.7	667	30.7%	461.2	729	32.4%	538.1	816	35.8%	684.2
1800	472	25.9%	263.1	585	29.8%	387.2	683	33.0%	519.2	759	35.7%	640.2	836	38.5%	775.8
2000	489	28.3%	307.0	601	32.2%	442.1	698	35.3%	581.0	782	38.7%	736.9	854	41.3%	870.5
2200	507	30.8%	358.2	617	34.7%	502.3	713	37.7%	647.6	802	41.6%	829.9	870	44.1%	969.1
2400	526	33.6%	417.9	634	37.3%	568.8	727	40.3%	720.3	818	44.5%	921.6	886	47.0%	1072.5
2600	547	36.5%	487.0	650	40.1%	642.7	742	43.0%	800.3	833	47.3%	1014.0	901	50.1%	1181.4
2800	569	39.7%	566.6	667	43.1%	725.5	756	46.0%	889.0	845	50.2%	1109.5	915	53.3%	1296.7
3000	592	43.1%	657.8	685	46.2%	818.5	770	49.1%	987.7	857	53.3%	1210.4	929	56.7%	1419.0
3200	616	46.8%	761.5	704	49.7%	923.1	785	52.6%	1098.0	867	56.5%	1319.1	941	60.4%	1548.9
3400	642	50.7%	878.8	723	53.4%	1040.9	800	56.4%	1221.2	877	60.1%	1438.1	952	64.2%	1686.7
3600	669	54.9%	1010.3	742	57.5%	1173.1	815	60.5%	1358.6	887	64.0%	1569.8	963	68.4%	1832.4
3800	697	59.4%	1156.5	763	61.9%	1320.8	831	65.1%	1511.5	896	68.3%	1716.5	972	72.8%	1985.8

CFM	1.2			1.4			1.6			1.8			2.0		
	RPM	SPEED %	POWER INPUT	RPM	SPEED %	POWER INPUT	RPM	SPEED %	POWER INPUT	RPM	SPEED %	POWER INPUT	RPM	SPEED %	POWER INPUT
1600	861	37.1%	750.2	903	38.3%	821.0	-	-	-	-	-	-	-	-	-
1800	879	39.8%	845.7	920	41.2%	923.2	-	-	-	-	-	-	-	-	-
2000	898	42.8%	952.4	939	44.3%	1041.1	-	-	-	-	-	-	-	-	-
2200	917	45.9%	1069.9	960	47.8%	1174.0	-	-	-	-	-	-	-	-	-
2400	936	49.3%	1197.7	982	51.4%	1320.9	-	-	-	-	-	-	-	-	-
2600	955	52.8%	1335.0	1004	55.3%	1480.1	-	-	-	-	-	-	-	-	-
2800	973	56.4%	1480.3	1026	59.4%	1649.0	-	-	-	-	-	-	-	-	-
3000	989	60.3%	1632.2	1048	63.6%	1824.8	-	-	-	-	-	-	-	-	-
3200	1005	64.3%	1788.4	1067	68.0%	2003.7	-	-	-	-	-	-	-	-	-
3400	1018	68.4%	1946.8	1083	72.5%	2181.8	-	-	-	-	-	-	-	-	-
3600	1030	72.6%	2104.4	1095	77.1%	2354.7	-	-	-	-	-	-	-	-	-
3800	1038	77.0%	2258.2	1102	81.8%	2517.8	-	-	-	-	-	-	-	-	-

10 Ton

CFM	0.2			0.4			0.6			0.8			1.0		
	RPM	SPEED %	POWER INPUT	RPM	SPEED %	POWER INPUT	RPM	SPEED %	POWER INPUT	RPM	SPEED %	POWER INPUT	RPM	SPEED %	POWER INPUT
1800	472	25.9%	263.1	585	29.8%	387.2	683	33.0%	519.2	759	35.7%	640.2	836	38.5%	775.8
2000	489	28.3%	307.0	601	32.2%	442.1	698	35.3%	581.0	782	38.7%	736.9	854	41.3%	870.5
2200	507	30.8%	358.2	617	34.7%	502.3	713	37.7%	647.6	802	41.6%	829.9	870	44.1%	969.1
2400	526	33.6%	417.9	634	37.3%	568.8	727	40.3%	720.3	818	44.5%	921.6	886	47.0%	1072.5
2600	547	36.5%	487.0	650	40.1%	642.7	742	43.0%	800.3	833	47.3%	1014.0	901	50.1%	1181.4
2800	569	39.7%	566.6	667	43.1%	725.5	756	46.0%	889.0	845	50.2%	1109.5	915	53.3%	1296.7
3000	592	43.1%	657.8	685	46.2%	818.5	770	49.1%	987.7	857	53.3%	1210.4	929	56.7%	1419.0
3200	616	46.8%	761.5	704	49.7%	923.1	785	52.6%	1098.0	867	56.5%	1319.1	941	60.4%	1548.9
3400	642	50.7%	878.8	723	53.4%	1040.9	800	56.4%	1221.2	877	60.1%	1438.1	952	64.2%	1686.7
3600	669	54.9%	1010.3	742	57.5%	1173.1	815	60.5%	1358.6	887	64.0%	1569.8	963	68.4%	1832.4
3800	697	59.4%	1156.5	763	61.9%	1320.8	831	65.1%	1511.5	896	68.3%	1716.5	972	72.8%	1985.8
4000	725	64.3%	1317.3	785	66.7%	1484.8	847	70.0%	1680.5	907	73.2%	1880.4	981	77.6%	2145.8
4200	753	69.5%	1492.2	808	72.0%	1664.9	866	75.4%	1865.9	921	78.6%	2063.7	989	82.7%	2311.0
4400	780	75.1%	1679.7	832	77.8%	1860.4	887	81.4%	2067.2	941	84.7%	2267.9	997	88.2%	2478.8
4600	805	81.0%	1877.5	857	84.0%	2068.8	913	87.8%	2282.7						
4800	828	87.3%	2082.0												

CFM	1.2			1.4			1.6			1.8			2.0		
	RPM	SPEED %	POWER INPUT	RPM	SPEED %	POWER INPUT	RPM	SPEED %	POWER INPUT	RPM	SPEED %	POWER INPUT	RPM	SPEED %	POWER INPUT
2200	917	45.9%	1069.9	960	47.8%	1174.0	-	-	-	-	-	-	-	-	-
2400	936	49.3%	1197.7	982	51.4%	1320.9	-	-	-	-	-	-	-	-	-
2600	955	52.8%	1335.0	1004	55.3%	1480.1	-	-	-	-	-	-	-	-	-
2800	973	56.4%	1480.3	1026	59.4%	1649.0	-	-	-	-	-	-	-	-	-
3000	989	60.3%	1632.2	1048	63.6%	1824.8	-	-	-	-	-	-	-	-	-
3200	1005	64.3%	1788.4	1067	68.0%	2003.7	-	-	-	-	-	-	-	-	-
3400	1018	68.4%	1946.8	1083	72.5%	2181.8	-	-	-	-	-	-	-	-	-
3600	1030	72.6%	2104.4	1095	77.1%	2354.7	-	-	-	-	-	-	-	-	-
3800	1038	77.0%	2258.2	1102	81.8%	2517.8	-	-	-	-	-	-	-	-	-
4000	1043	81.5%	2404.7				-	-	-	-	-	-	-	-	-
4200	1044	86.1%	2540.0				-	-	-	-	-	-	-	-	-

Horizontal Flow High Static

7.5 Ton

CFM	0.2			0.4			0.6			0.8			1.0		
	RPM	SPEED %	POWER INPUT	RPM	SPEED %	POWER INPUT	RPM	SPEED %	POWER INPUT	RPM	SPEED %	POWER INPUT	RPM	SPEED %	POWER INPUT
1800	472.4	25.9%	263.1	584.9	29.8%	387.2	682.7	33.0%	519.2	758.6	35.7%	640.2	835.5	38.5%	775.8
2000	489.2	28.3%	307.0	601.2	32.2%	442.1	697.8	35.3%	581.0	782.2	38.7%	736.9	853.5	41.3%	870.5
2200	507.1	30.8%	358.2	617.4	34.7%	502.3	712.6	37.7%	647.6	801.8	41.6%	829.9	870.4	44.1%	969.1
2400	526.2	33.6%	417.9	633.7	37.3%	568.8	727.1	40.3%	720.3	818.3	44.5%	921.6	886.3	47.0%	1072.5
2600	546.7	36.5%	487.0	650.4	40.1%	642.7	741.5	43.0%	800.3	832.7	47.3%	1014.0	901.3	50.1%	1181.4
2800	568.6	39.7%	566.6	667.5	43.1%	725.5	756.0	46.0%	889.0	845.4	50.2%	1109.5	915.4	53.3%	1296.7
3000	591.8	43.1%	657.8	685.2	46.2%	818.5	770.4	49.1%	987.7	856.8	53.3%	1210.4	928.5	56.7%	1419.0
3200	616.3	46.8%	761.5	703.5	49.7%	923.1	785.0	52.6%	1098.0	867.3	56.5%	1319.1	940.8	60.4%	1548.9
3400	642.1	50.7%	878.8	722.6	53.4%	1040.9	799.8	56.4%	1221.2	877.1	60.1%	1438.1	952.2	64.2%	1686.7
3600	669.0	54.9%	1010.3	742.5	57.5%	1173.1	815.0	60.5%	1358.6	886.5	64.0%	1569.8	962.6	68.4%	1832.4
3800	696.7	59.4%	1156.5	763.2	61.9%	1320.8	830.7	65.1%	1511.5	896.1	68.3%	1716.5	972.1	72.8%	1985.8

CFM	1.2			1.4			1.6			1.8			2.0		
	RPM	SPEED %	POWER INPUT	RPM	SPEED %	POWER INPUT	RPM	SPEED %	POWER INPUT	RPM	SPEED %	POWER INPUT	RPM	SPEED %	POWER INPUT
1800	879.0	39.8%	845.7	920.2	41.2%	923.2	973.3	43.1%	1040.3	1026.6	45.7%	1180.3	1077.6	48.1%	1320.8
2000	897.7	42.8%	952.4	939.2	44.3%	1041.1	989.6	46.4%	1155.9	1041.2	48.8%	1300.5	1089.6	51.1%	1437.8
2200	916.8	45.9%	1069.9	959.8	47.8%	1174.0	1007.0	49.7%	1284.7	1056.1	52.0%	1428.0	1101.9	54.1%	1561.2
2400	935.8	49.3%	1197.7	981.7	51.4%	1320.9	1025.7	53.3%	1428.4	1071.9	55.3%	1567.7	1115.2	57.4%	1698.9
2600	954.5	52.8%	1335.0	1004.2	55.3%	1480.1	1045.6	57.1%	1588.4	1089.3	59.1%	1725.2	1130.4	61.1%	1859.3
2800	972.5	56.4%	1480.3	1026.5	59.4%	1649.0	1066.7	61.2%	1766.1	1108.6	63.2%	1906.0	1148.2	65.4%	2050.8
3000	989.5	60.3%	1632.2	1047.7	63.6%	1824.8	1088.7	65.7%	1961.7	1130.1	68.0%	2115.1	1169.3	70.7%	2281.0
3200	1004.9	64.3%	1788.4	1066.9	68.0%	2003.7	1111.0	70.6%	2174.3	1153.9	73.5%	2355.7	1194.4	76.9%	2554.9
3400	1018.4	68.4%	1946.8	1083.1	72.5%	2181.8	1132.6	76.0%	2400.7	1179.4	79.9%	2627.4	1224.1	84.4%	2872.0
3600	1029.6	72.6%	2104.4	1095.0	77.1%	2354.7	1151.9	81.8%	2634.2	1205.4	87.3%	2923.7			
3800	1037.8	77.0%	2258.2	1101.7	81.8%	2517.8	1166.6	88.2%	2863.5						

8.5 Ton

CFM	0.2			0.4			0.6			0.8			1.0		
	RPM	SPEED %	POWER INPUT	RPM	SPEED %	POWER INPUT	RPM	SPEED %	POWER INPUT	RPM	SPEED %	POWER INPUT	RPM	SPEED %	POWER INPUT
1800	483	21.9%	274.9	586	22.7%	345.1	708	24.5%	542.7	763	25.9%	635.3	809	27.2%	711.5
2000	501	23.3%	321.5	604	24.5%	417.5	722	26.7%	621.7	780	28.1%	729.6	834	29.7%	841.7
2200	519	24.7%	374.1	622	26.2%	493.2	735	28.7%	703.2	796	30.2%	825.2	856	32.0%	968.0
2400	538	26.2%	433.6	639	28.0%	573.0	747	30.7%	786.7	811	32.2%	922.0	875	34.2%	1090.9
2600	559	27.9%	500.8	657	29.8%	657.8	760	32.5%	872.7	825	34.1%	1020.8	893	36.3%	1211.5
2800	580	29.6%	576.9	675	31.6%	748.6	772	34.3%	962.1	839	36.0%	1122.7	908	38.2%	1331.5
3000	602	31.5%	663.0	694	33.6%	846.6	784	36.2%	1056.3	852	37.9%	1229.3	923	40.2%	1453.0
3200	625	33.5%	760.1	713	35.6%	953.1	797	38.0%	1157.2	866	39.8%	1342.4	938	42.1%	1578.5
3400	650	35.7%	869.7	732	37.7%	1069.4	811	40.0%	1266.9	880	41.8%	1464.3	952	44.1%	1710.8
3600	675	38.0%	993.0	753	39.9%	1197.0	825	42.0%	1387.8	894	43.9%	1597.3	966	46.3%	1852.9
3800	701	40.4%	1131.3	774	42.3%	1337.7	841	44.2%	1522.8	909	46.1%	1744.2	980	48.5%	2007.8
4000	728	43.1%	1286.0	796	44.9%	1493.2	857	46.6%	1674.8	925	48.6%	1907.7	994	51.0%	2178.9
4200	755	45.9%	1458.4	819	47.7%	1665.3	876	49.2%	1847.0	942	51.2%	2090.7	1010	53.7%	2369.5

CFM	1.2			1.4			1.6			1.8			2.0		
	RPM	SPEED %	POWER INPUT	RPM	SPEED %	POWER INPUT	RPM	SPEED %	POWER INPUT	RPM	SPEED %	POWER INPUT	RPM	SPEED %	POWER INPUT
1800	867	29.4%	855.8	917	30.6%	960.9	988	32.5%	1142.7	1037	33.8%	1272.7	1070	34.6%	1357.1
2000	896	31.9%	1006.7	945	32.8%	1117.2	1006	34.5%	1277.3	1052	35.7%	1406.0	1085	36.6%	1498.1
2200	920	34.2%	1151.2	970	35.0%	1268.6	1025	36.5%	1418.3	1069	37.8%	1552.2	1102	38.8%	1656.3
2400	942	36.4%	1290.6	991	37.2%	1416.9	1042	38.6%	1566.2	1086	39.9%	1711.1	1121	41.1%	1831.3
2600	961	38.5%	1426.6	1011	39.3%	1564.1	1060	40.8%	1721.6	1103	42.3%	1882.7	1141	43.6%	2022.8
2800	978	40.5%	1561.4	1028	41.4%	1711.8	1077	43.0%	1885.0	1122	44.7%	2066.6	1161	46.2%	2229.9
3000	993	42.5%	1697.2	1044	43.6%	1862.1	1094	45.4%	2057.2	1140	47.3%	2262.4	1183	49.0%	2451.4
3200	1008	44.5%	1836.8	1059	45.8%	2016.7	1110	47.9%	2238.5	1159	50.0%	2469.6	1204	51.8%	2686.0
3400	1022	46.6%	1982.8	1073	48.1%	2177.6	1126	50.5%	2429.7	1177	52.8%	2687.5	1225	54.8%	2931.9
3600	1036	48.8%	2138.3	1086	50.5%	2346.8	1142	53.2%	2631.3	1195	55.6%	2915.2	1246	57.9%	3187.1
3800	1049	51.1%	2306.2	1098	53.1%	2526.4	1157	56.0%	2843.7	1212	58.6%	3151.6	1265	61.0%	3449.2
4000	1062	53.7%	2489.5	1109	55.8%	2718.6	1171	58.9%	3067.4	1228	61.7%	3395.6	1282	64.2%	3715.7
4200	1076	56.4%	2691.1	1121	58.7%	2925.8	1185	62.0%	3302.9	1242	64.9%	3645.9	1297	67.5%	3983.8

10 Ton

CFM	0.2			0.4			0.6			0.8			1.0		
	RPM	SPEED %	POWER INPUT	RPM	SPEED %	POWER INPUT	RPM	SPEED %	POWER INPUT	RPM	SPEED %	POWER INPUT	RPM	SPEED %	POWER INPUT
1800	483	21.9%	274.9	586	22.7%	345.1	708	24.5%	542.7	763	25.9%	635.3	809	27.2%	711.5
2000	501	23.3%	321.5	604	24.5%	417.5	722	26.7%	621.7	780	28.1%	729.6	834	29.7%	841.7
2200	519	24.7%	374.1	622	26.2%	493.2	735	28.7%	703.2	796	30.2%	825.2	856	32.0%	968.0
2400	538	26.2%	433.6	639	28.0%	573.0	747	30.7%	786.7	811	32.2%	922.0	875	34.2%	1090.9
2600	559	27.9%	500.8	657	29.8%	657.8	760	32.5%	872.7	825	34.1%	1020.8	893	36.3%	1211.5
2800	580	29.6%	576.9	675	31.6%	748.6	772	34.3%	962.1	839	36.0%	1122.7	908	38.2%	1331.5
3000	602	31.5%	663.0	694	33.6%	846.6	784	36.2%	1056.3	852	37.9%	1229.3	923	40.2%	1453.0
3200	625	33.5%	760.1	713	35.6%	953.1	797	38.0%	1157.2	866	39.8%	1342.4	938	42.1%	1578.5
3400	650	35.7%	869.7	732	37.7%	1069.4	811	40.0%	1266.9	880	41.8%	1464.3	952	44.1%	1710.8
3600	675	38.0%	993.0	753	39.9%	1197.0	825	42.0%	1387.8	894	43.9%	1597.3	966	46.3%	1852.9
3800	701	40.4%	1131.3	774	42.3%	1337.7	841	44.2%	1522.8	909	46.1%	1744.2	980	48.5%	2007.8
4000	728	43.1%	1286.0	796	44.9%	1493.2	857	46.6%	1674.8	925	48.6%	1907.7	994	51.0%	2178.9
4200	755	45.9%	1458.4	819	47.7%	1665.3	876	49.2%	1847.0	942	51.2%	2090.7	1010	53.7%	2369.5
4400	783	48.9%	1649.9	843	50.6%	1855.9	896	52.1%	2042.5	960	54.2%	2296.0	1025	56.6%	2582.9
4600	812	52.1%	1861.5	868	53.8%	2066.9	918	55.3%	2264.7	980	57.4%	2526.2	1042	59.9%	2822.2
4800	841	55.6%	2094.2	893	57.2%	2300.4	942	58.8%	2516.2	1000	60.9%	2783.6	1059	63.6%	3089.8
5000	870	59.2%	2348.5	919	60.9%	2558.1	968	62.7%	2799.3	1022	64.8%	3069.4	1077	67.7%	3387.6

CFM	1.2			1.4			1.6			1.8			2.0		
	RPM	SPEED %	POWER INPUT	RPM	SPEED %	POWER INPUT	RPM	SPEED %	POWER INPUT	RPM	SPEED %	POWER INPUT	RPM	SPEED %	POWER INPUT
1800	867	29.4%	855.8	917	30.6%	960.9	988	32.5%	1142.7	1037	33.8%	1272.7	1070	34.6%	1357.1
2000	896	31.9%	1006.7	945	32.8%	1117.2	1006	34.5%	1277.3	1052	35.7%	1406.0	1085	36.6%	1498.1
2200	920	34.2%	1151.2	970	35.0%	1268.6	1025	36.5%	1418.3	1069	37.8%	1552.2	1102	38.8%	1656.3
2400	942	36.4%	1290.6	991	37.2%	1416.9	1042	38.6%	1566.2	1086	39.9%	1711.1	1121	41.1%	1831.3
2600	961	38.5%	1426.6	1011	39.3%	1564.1	1060	40.8%	1721.6	1103	42.3%	1882.7	1141	43.6%	2022.8
2800	978	40.5%	1561.4	1028	41.4%	1711.8	1077	43.0%	1885.0	1122	44.7%	2066.6	1161	46.2%	2229.9
3000	993	42.5%	1697.2	1044	43.6%	1862.1	1094	45.4%	2057.2	1140	47.3%	2262.4	1183	49.0%	2451.4
3200	1008	44.5%	1836.8	1059	45.8%	2016.7	1110	47.9%	2238.5	1159	50.0%	2469.6	1204	51.8%	2686.0
3400	1022	46.6%	1982.8	1073	48.1%	2177.6	1126	50.5%	2429.7	1177	52.8%	2687.5	1225	54.8%	2931.9
3600	1036	48.8%	2138.3	1086	50.5%	2346.8	1142	53.2%	2631.3	1195	55.6%	2915.2	1246	57.9%	3187.1
3800	1049	51.1%	2306.2	1098	53.1%	2526.4	1157	56.0%	2843.7	1212	58.6%	3151.6	1265	61.0%	3449.2
4000	1062	53.7%	2489.5	1109	55.8%	2718.6	1171	58.9%	3067.4	1228	61.7%	3395.6	1282	64.2%	3715.7
4200	1076	56.4%	2691.1	1121	58.7%	2925.8	1185	62.0%	3302.9	1242	64.9%	3645.9	1297	67.5%	3983.8
4400	1089	59.5%	2913.8	1132	61.8%	3150.4	1198	65.2%	3550.5	1255	68.1%	3900.9	1308	70.8%	4250.8
4600	1103	62.8%	3160.1	1144	65.1%	3395.4	1210	68.6%	3810.5	1265	71.5%	4159.1	1316	74.1%	4513.5
4800	1116	66.6%	3431.7	1156	68.6%	3663.9	1222	72.2%	4083.1	1273	74.9%	4418.7	1320	77.5%	4769.1
5000	1130	70.7%	3729.8	1171	72.5%	3959.5	1233	75.9%	4368.2	1278	78.3%	4677.7	1319	80.9%	5014.6

ID DB		61		65		68		70		72		75	
ID CFM	OD WB	TC	PI	TC	PI	TC	PI	TC	PI	TC	PI	TC	PI
2550 CFM	-13	3.71	2.20	3.44	2.28	3.24	2.34	3.10	2.39	2.96	2.42	2.75	2.48
	-10	4.32	2.20	4.05	2.28	3.85	2.35	3.71	2.39	3.57	2.42	3.36	2.48
	-5	5.37	2.20	5.09	2.28	4.89	2.34	4.75	2.38	4.61	2.42	4.40	2.48
	0	6.44	2.20	6.16	2.28	5.96	2.34	5.82	2.38	5.68	2.42	5.47	2.47
	5	7.54	2.19	7.26	2.28	7.05	2.34	6.91	2.38	6.77	2.41	6.56	2.47
	10	8.67	2.19	8.39	2.27	8.17	2.33	8.03	2.37	7.89	2.41	7.67	2.46
	15	9.83	1.20	9.54	1.29	9.32	1.35	9.18	1.39	9.03	1.43	8.81	1.48
	20	11.02	1.19	10.72	1.27	10.50	1.33	10.35	1.37	10.20	1.41	9.98	1.47
	25	12.24	1.17	11.93	1.25	11.70	1.31	11.55	1.36	11.40	1.40	11.16	1.45
	30	13.48	1.14	13.17	1.23	12.93	1.29	12.78	1.33	12.62	1.37	12.38	1.43
	35	14.76	1.11	14.43	1.20	14.19	1.26	14.03	1.31	13.86	1.35	13.61	1.41
	40	16.06	1.08	15.73	1.17	15.47	1.23	15.31	1.28	15.13	1.32	14.87	1.38
	45	16.70	0.71	16.35	0.80	16.09	0.87	15.91	0.91	15.73	0.95	15.46	1.01
	50	16.70	0.69	16.35	0.78	16.09	0.84	15.91	0.89	15.73	0.93	15.46	0.99
	55	16.70	0.67	16.35	0.76	16.09	0.83	15.91	0.87	15.73	0.92	15.46	0.98
	60	16.70	0.67	16.35	0.76	16.09	0.82	15.91	0.87	15.73	0.91	15.46	0.97
	65	16.70	0.67	16.35	0.76	16.09	0.82	15.91	0.87	15.73	0.91	15.46	0.97
2950 CFM	-13	3.73	2.15	3.46	2.23	3.25	2.29	3.11	2.33	2.97	2.37	2.76	2.43
	-10	4.35	2.15	4.07	2.23	3.87	2.29	3.73	2.33	3.59	2.37	3.38	2.43
	-5	5.39	2.15	5.12	2.23	4.91	2.29	4.77	2.33	4.63	2.37	4.42	2.42
	0	6.47	2.15	6.19	2.23	5.99	2.29	5.85	2.33	5.71	2.37	5.49	2.42
	5	7.58	2.15	7.30	2.23	7.09	2.29	6.95	2.33	6.80	2.36	6.59	2.42
	10	8.71	2.14	8.43	2.22	8.21	2.28	8.07	2.32	7.93	2.36	7.71	2.41
	15	9.88	1.18	9.59	1.26	9.37	1.32	9.22	1.36	9.08	1.40	8.85	1.45
	20	11.07	1.16	10.77	1.24	10.55	1.30	10.40	1.35	10.25	1.38	10.02	1.44
	25	12.29	1.14	11.99	1.23	11.76	1.29	11.61	1.33	11.45	1.37	11.22	1.42
	30	13.55	1.12	13.23	1.20	12.99	1.26	12.84	1.31	12.68	1.34	12.43	1.40
	35	14.83	1.09	14.50	1.17	14.26	1.24	14.09	1.28	13.93	1.32	13.68	1.38
	40	16.14	1.06	15.80	1.14	15.55	1.21	15.38	1.25	15.20	1.29	14.94	1.35
	45	16.78	0.70	16.43	0.78	16.16	0.85	15.99	0.89	15.80	0.93	15.53	0.99
	50	16.78	0.67	16.43	0.76	16.16	0.83	15.99	0.87	15.80	0.91	15.53	0.97
	55	16.78	0.66	16.43	0.75	16.16	0.81	15.99	0.85	15.80	0.90	15.53	0.96
	60	16.78	0.65	16.43	0.74	16.16	0.81	15.99	0.85	15.80	0.89	15.53	0.95
	65	16.78	0.65	16.43	0.74	16.16	0.81	15.99	0.85	15.80	0.89	15.53	0.95
3350 CFM	-13	3.74	2.12	3.47	2.20	3.26	2.26	3.12	2.30	2.98	2.33	2.77	2.38
	-10	4.36	2.12	4.09	2.20	3.88	2.26	3.74	2.29	3.60	2.33	3.39	2.38
	-5	5.41	2.12	5.14	2.20	4.93	2.25	4.79	2.29	4.65	2.33	4.44	2.38
	0	6.49	2.12	6.21	2.19	6.01	2.25	5.87	2.29	5.73	2.33	5.51	2.38
	5	7.60	2.11	7.32	2.19	7.11	2.25	6.97	2.29	6.83	2.32	6.61	2.38
	10	8.74	2.10	8.46	2.18	8.24	2.24	8.10	2.28	7.95	2.32	7.74	2.37
	15	9.91	1.16	9.62	1.24	9.40	1.30	9.25	1.34	9.11	1.37	8.88	1.43
	20	11.11	1.14	10.81	1.22	10.59	1.28	10.44	1.32	10.29	1.36	10.06	1.41
	25	12.34	1.12	12.03	1.20	11.80	1.26	11.65	1.31	11.49	1.34	11.26	1.40
	30	13.59	1.10	13.28	1.18	13.04	1.24	12.88	1.28	12.72	1.32	12.48	1.38
	35	14.88	1.07	14.55	1.15	14.31	1.22	14.14	1.26	13.98	1.30	13.72	1.35
	40	16.20	1.04	15.86	1.12	15.60	1.19	15.43	1.23	15.26	1.27	15.00	1.33
	45	16.84	0.69	16.48	0.77	16.22	0.83	16.04	0.87	15.86	0.91	15.58	0.97
	50	16.84	0.66	16.48	0.75	16.22	0.81	16.04	0.85	15.86	0.89	15.58	0.95
	55	16.84	0.65	16.48	0.73	16.22	0.80	16.04	0.84	15.86	0.88	15.58	0.94
	60	16.84	0.64	16.48	0.73	16.22	0.79	16.04	0.83	15.86	0.87	15.58	0.94
	65	16.84	0.64	16.48	0.73	16.22	0.79	16.04	0.84	15.86	0.88	15.58	0.94

TC: Condensor Total Capacity (1,000 BTU/h) Net TC = TC + Blower input

PI: Power input(kW) Compressor + outdoor fan System PI = PI + Blower input

Note: TC represents the condensor's heat load and do not account for the blower input. To calculate the net capacity, add the blower input from the value.

is shown as reference data.

The blank areas indicate that operation at this compressor speed is not possible under those conditions.

ID DB		61		65		68		70		72		75	
ID CFM	OD WB	TC	PI	TC	PI	TC	PI	TC	PI	TC	PI	TC	PI
2550 CFM	-13	27.37	5.42	26.69	5.60	26.17	5.74	25.83	5.83	25.47	5.92	24.94	6.06
	-10	29.41	5.48	28.73	5.67	28.23	5.81	27.89	5.90	27.53	6.00	27.00	6.14
	-5	33.12	5.59	32.45	5.79	31.95	5.93	31.62	6.03	31.27	6.13	30.74	6.28
	0	37.22	5.71	36.56	5.91	36.06	6.07	35.73	6.17	35.38	6.27	34.85	6.43
	5	41.71	5.83	41.04	6.04	40.55	6.21	40.21	6.31	39.86	6.42	39.33	6.59
	10	46.58	5.96	45.92	6.18	45.41	6.35	45.08	6.47	44.72	6.58	44.19	6.76
	15	51.85	5.02	51.17	5.25	50.66	5.43	50.32	5.54	49.96	5.66	49.42	5.84
	20	57.51	5.16	56.82	5.40	56.29	5.59	55.95	5.71	55.57	5.83	55.01	6.02
	25	63.56	5.30	62.84	5.55	62.30	5.75	61.95	5.88	61.56	6.01	60.99	6.20
	30	70.00	5.43	69.25	5.70	68.70	5.90	68.32	6.04	67.93	6.17	67.33	6.38
	35	76.83	5.56	76.05	5.84	75.47	6.05	75.08	6.20	74.67	6.34	74.05	6.55
	40	84.05	5.68	83.23	5.98	82.62	6.20	82.22	6.35	81.78	6.50	81.13	6.72
	45	91.66	5.80	90.80	6.11	90.16	6.35	89.73	6.50	89.28	6.66	88.60	6.89
	50	99.66	5.92	98.75	6.24	98.07	6.49	97.62	6.65	97.14	6.81	96.43	7.06
	55	108.05	6.03	107.09	6.37	106.37	6.62	105.89	6.79	105.39	6.96	104.63	7.22
	60	116.83	6.14	115.81	6.49	115.05	6.76	114.54	6.93	114.01	7.11	113.21	7.38
	65	126.00	6.24	124.92	6.61	124.10	6.89	123.56	7.07	123.00	7.26		
2950 CFM	-13	27.65	5.21	26.95	5.39	26.43	5.52	26.09	5.60	25.73	5.69	25.19	5.83
	-10	29.70	5.28	29.02	5.45	28.51	5.59	28.16	5.68	27.81	5.77	27.27	5.91
	-5	33.45	5.38	32.77	5.57	32.27	5.71	31.93	5.80	31.58	5.90	31.05	6.04
	0	37.59	5.49	36.92	5.69	36.42	5.84	36.08	5.94	35.73	6.04	35.20	6.19
	5	42.12	5.61	41.45	5.82	40.95	5.97	40.61	6.07	40.26	6.18	39.72	6.34
	10	47.05	5.73	46.37	5.95	45.86	6.11	45.53	6.22	45.17	6.33	44.63	6.50
	15	52.37	4.83	51.68	5.05	51.17	5.22	50.82	5.33	50.46	5.45	49.91	5.62
	20	58.08	4.96	57.38	5.20	56.85	5.38	56.50	5.49	56.12	5.61	55.56	5.79
	25	64.19	5.10	63.47	5.34	62.92	5.53	62.56	5.65	62.17	5.78	61.59	5.97
	30	70.69	5.22	69.94	5.48	69.38	5.68	69.00	5.81	68.60	5.94	68.00	6.14
	35	77.59	5.35	76.81	5.62	76.22	5.82	75.83	5.96	75.41	6.10	74.78	6.30
	40	84.88	5.47	84.06	5.75	83.44	5.97	83.03	6.11	82.59	6.25	81.94	6.47
	45	92.57	5.58	91.70	5.88	91.05	6.11	90.62	6.26	90.16	6.41	89.47	6.63
	50	100.65	5.69	99.73	6.01	99.05	6.24	98.59	6.40	98.11	6.55	97.39	6.79
	55	109.12	5.80	108.15	6.13	107.42	6.37	106.94	6.54	106.43	6.70	105.67	6.95
	60	117.99	5.90	116.96	6.24	116.19	6.50	115.67	6.67	115.14	6.84	114.34	7.10
	65	127.25	6.00	126.16	6.36	125.34	6.63	124.79	6.80	124.22	6.98	123.37	7.25
3350 CFM	-13	27.68	5.01	26.99	5.18	26.47	5.30	26.12	5.38	25.76	5.47	25.22	5.60
	-10	29.74	5.07	29.05	5.24	28.54	5.37	28.20	5.45	27.84	5.54	27.31	5.68
	-5	33.49	5.17	32.81	5.35	32.31	5.48	31.97	5.57	31.62	5.67	31.08	5.81
	0	37.63	5.28	36.96	5.47	36.46	5.61	36.13	5.70	35.77	5.80	35.24	5.95
	5	42.17	5.39	41.50	5.59	41.00	5.74	40.66	5.84	40.31	5.94	39.77	6.09
	10	47.10	5.51	46.43	5.72	45.92	5.87	45.58	5.98	45.22	6.08	44.68	6.25
	15	52.43	4.64	51.74	4.85	51.23	5.01	50.88	5.12	50.52	5.23	49.97	5.40
	20	58.15	4.77	57.45	5.00	56.92	5.17	56.57	5.28	56.19	5.39	55.63	5.57
	25	64.27	4.90	63.54	5.13	63.00	5.31	62.64	5.43	62.25	5.55	61.67	5.73
	30	70.78	5.02	70.03	5.27	69.46	5.46	69.09	5.58	68.68	5.71	68.08	5.89
	35	77.68	5.14	76.90	5.40	76.31	5.60	75.92	5.73	75.50	5.86	74.87	6.06
	40	84.98	5.25	84.16	5.53	83.54	5.73	83.13	5.87	82.69	6.01	82.04	6.21
	45	92.68	5.36	91.81	5.65	91.16	5.87	90.73	6.01	90.27	6.15	89.58	6.37
	50	100.77	5.47	99.85	5.77	99.17	6.00	98.71	6.15	98.23	6.30	97.50	6.52
	55	109.25	5.57	108.28	5.89	107.55	6.12	107.07	6.28	106.56	6.44	105.80	6.67
	60	118.13	5.67	117.10	6.00	116.33	6.25	115.81	6.41	115.28	6.57	114.47	6.82
	65	127.40	5.77	126.31	6.11	125.49	6.37	124.94	6.54	124.37	6.71	123.52	6.97

TC: Condensor Total Capacity (1,000 BTU/h) Net TC = TC + Blower input

PI: Power input(kW) Compressor + outdoor fan System PI = PI + Blower input

Note: TC represents the condensor's heat load and do not account for the blower input. To calculate the net capacity, add the blower input from the value.

is shown as reference data.

The blank areas indicate that operation at this compressor speed is not possible under those conditions.

ID DB		61		65		68		70		72		75	
ID CFM	OD WB	TC	PI	TC	PI	TC	PI	TC	PI	TC	PI	TC	PI
2550 CFM	-13	55.14	10.84	54.13	11.13	53.37	11.35	52.87	11.49	52.39	11.66	51.38	11.77
	-10	58.70	11.05	57.71	11.34	56.96	11.56	56.46	11.70	55.52	11.77	54.55	11.77
	-5	65.03	11.38	64.05	11.68	63.19	11.77	62.27	11.77	61.49	11.77	60.32	11.77
	0	71.85	11.71	71.30	11.77	69.75	11.77	68.73	11.77	67.88	11.77	66.59	11.77
	5	80.21	11.77	78.24	11.77	76.77	11.77	75.80	11.77	74.69	11.77	73.02	11.77
	10	87.22	11.77	85.32	11.77	83.90	11.77	82.96	11.77	81.61	11.77	79.59	11.77
	15	95.13	11.77	92.94	11.77	91.30	11.77	90.20	11.77	88.65	11.77	86.32	11.77
	20	103.12	11.77	100.64	11.77	98.77	11.77	97.53	11.77	95.79	11.77	93.19	11.77
	25	111.20	11.77	108.42	11.77	106.34	11.77	104.95	11.77	103.05	11.77	100.21	11.77
	30	119.36	11.77	116.29	11.77	113.99	11.77	112.45	11.77	110.42	11.77	107.38	11.77
	35	127.60	11.77	124.24	11.77	121.72	11.77	120.04	11.77	117.90	11.77	114.70	11.77
	40	135.93	11.77	132.28	11.77	129.54	11.77	127.72	11.77	125.50	11.77	119.91	11.34
	45	144.34	11.77	140.40	11.77	137.45	11.77	135.48	11.77	133.18	11.77	120.67	10.18
	50	152.83	11.77	148.61	11.77	145.45	11.77	142.35	11.61	133.80	10.60	121.36	9.17
	55	161.41	11.77	156.90	11.77	151.41	11.45	142.81	10.49	134.34	9.58	122.00	8.28
	60	170.06	11.77	165.15	11.75	151.83	10.38	143.19	9.51	134.81	8.68	122.60	7.51
	65	178.80	11.77	165.53	10.69	152.16	9.44	143.49	8.65	135.22	7.89	123.15	6.83
2950 CFM	-13	55.77	10.39	54.75	10.67	53.98	10.88	53.47	11.01	52.98	11.17	52.26	11.41
	-10	59.37	10.59	58.36	10.87	57.60	11.08	57.10	11.22	56.62	11.38	55.91	11.62
	-5	65.76	10.91	64.78	11.19	64.03	11.41	63.54	11.55	63.07	11.71	62.34	11.77
	0	72.66	11.22	71.68	11.51	70.95	11.73	71.04	11.77	70.16	11.77	68.83	11.77
	5	80.05	11.52	80.41	11.64	79.17	11.72	78.35	11.77	77.20	11.77	75.47	11.77
	10	90.15	11.77	88.19	11.77	86.72	11.77	85.75	11.77	84.36	11.77	82.27	11.77
	15	98.33	11.77	96.06	11.77	94.36	11.77	93.23	11.77	91.63	11.77	89.22	11.77
	20	106.59	11.77	104.02	11.77	102.09	11.77	100.81	11.77	99.01	11.77	96.32	11.77
	25	114.94	11.77	112.07	11.77	109.91	11.77	108.47	11.77	106.52	11.77	103.58	11.77
	30	123.37	11.77	120.20	11.77	117.82	11.77	116.23	11.77	114.13	11.77	110.99	11.77
	35	131.89	11.77	128.42	11.77	125.81	11.77	124.08	11.77	121.87	11.77	118.56	11.77
	40	140.50	11.77	136.73	11.77	133.90	11.77	132.01	11.77	129.72	11.77	126.27	11.77
	45	149.19	11.77	145.12	11.77	142.07	11.77	140.04	11.77	137.68	11.77	134.15	11.77
	50	157.97	11.77	153.61	11.77	150.33	11.77	148.15	11.77	145.76	11.77	122.76	8.78
	55	166.83	11.77	162.18	11.77	158.68	11.77	156.36	11.77	135.89	9.17	123.41	7.93
	60	175.78	11.77	170.83	11.77	167.13	11.77	144.84	9.11	136.37	8.32	124.01	7.19
	65	184.81	11.77	179.58	11.77	153.91	9.04	145.14	8.28	136.78	7.56	124.57	6.54
3350 CFM	-13	56.14	10.05	55.11	10.32	54.34	10.52	53.83	10.65	53.34	10.81	52.61	11.04
	-10	59.77	10.24	58.75	10.51	57.99	10.71	57.48	10.85	57.00	11.00	56.28	11.24
	-5	66.21	10.55	65.21	10.83	64.47	11.03	63.97	11.17	63.49	11.33	62.78	11.56
	0	73.15	10.85	72.17	11.13	71.43	11.35	70.94	11.49	70.47	11.65	69.42	11.39
	5	80.59	11.14	79.62	11.43	78.89	11.65	79.02	11.39	77.86	11.39	76.12	11.39
	10	88.54	11.42	87.57	11.72	87.47	11.39	86.48	11.39	85.08	11.39	82.98	11.39
	15	96.98	11.69	96.89	11.39	95.18	11.39	94.03	11.39	92.42	11.39	89.99	11.39
	20	107.51	11.39	104.92	11.39	102.97	11.39	101.68	11.39	99.87	11.39	97.15	11.39
	25	115.93	11.39	113.03	11.39	110.86	11.39	109.41	11.39	107.43	11.39	104.47	11.39
	30	124.44	11.39	121.23	11.39	118.83	11.39	117.23	11.39	115.12	11.39	111.95	11.39
	35	133.03	11.39	129.52	11.39	126.90	11.39	125.14	11.39	122.92	11.39	119.58	11.39
	40	141.71	11.39	137.90	11.39	135.05	11.39	133.15	11.39	130.83	11.39	127.36	11.39
	45	150.48	11.39	146.37	11.39	143.29	11.39	141.24	11.39	138.87	11.39	135.30	11.39
	50	159.33	11.39	154.93	11.39	151.63	11.39	149.43	11.39	147.01	11.39	143.40	11.39
	55	168.27	11.39	163.57	11.39	160.05	11.39	157.70	11.39	155.28	11.39	151.65	11.39
	60	177.29	11.39	172.30	11.39	168.56	11.39	166.07	11.39	163.66	11.39	156.92	10.95
	65	186.40	11.39	181.13	11.39	177.17	11.39	174.53	11.39	172.16	11.39	157.63	9.95

TC: Condensor Total Capacity (1,000 BTU/h) Net TC = TC + Blower input

PI: Power input(kW) Compressor + outdoor fan System PI = PI + Blower input

Note: TC represents the condensor's heat load and do not account for the blower input. To calculate the net capacity, add the blower input from the value.

is shown as reference data.

The blank areas indicate that operation at this compressor speed is not possible under those conditions.

ID DB		61		65		68		70		72		75	
ID CFM	OD WB	TC	PI	TC	PI	TC	PI	TC	PI	TC	PI	TC	PI
2700 CFM	-13	3.69	2.10	3.42	2.18	3.22	2.23	3.08	2.27	2.94	2.31	2.73	2.36
	-10	4.33	2.10	4.06	2.18	3.85	2.23	3.72	2.27	3.58	2.31	3.36	2.36
	-5	5.41	2.10	5.14	2.17	4.93	2.23	4.79	2.27	4.65	2.31	4.44	2.36
	0	6.52	2.09	6.24	2.17	6.03	2.23	5.89	2.27	5.75	2.30	5.54	2.36
	5	7.65	2.09	7.37	2.17	7.15	2.22	7.01	2.26	6.87	2.30	6.65	2.35
	10	8.80	2.08	8.52	2.16	8.30	2.22	8.15	2.26	8.01	2.29	7.79	2.35
	15	9.98	1.39	9.69	1.47	9.47	1.52	9.32	1.56	9.17	1.60	8.95	1.65
	20	11.18	1.37	10.88	1.45	10.66	1.51	10.50	1.55	10.35	1.59	10.12	1.64
	25	12.41	1.35	12.10	1.43	11.87	1.49	11.71	1.53	11.56	1.57	11.32	1.62
	30	13.66	1.33	13.34	1.41	13.10	1.47	12.94	1.51	12.78	1.55	12.54	1.60
	35	14.94	1.30	14.61	1.38	14.36	1.44	14.20	1.48	14.03	1.52	13.77	1.58
	40	16.24	1.26	15.90	1.35	15.64	1.41	15.47	1.45	15.29	1.49	15.03	1.55
	45	16.89	0.67	16.70	0.76	16.56	0.82	16.47	0.86	16.37	0.90	16.22	0.96
	50	16.89	0.65	16.70	0.74	16.56	0.80	16.47	0.84	16.37	0.88	16.22	0.94
	55	16.89	0.63	16.70	0.72	16.56	0.78	16.47	0.83	16.37	0.87	16.22	0.93
	60	16.89	0.62	16.70	0.71	16.56	0.77	16.47	0.82	16.37	0.86	16.22	0.91
	65	16.89	0.62	16.70	0.70	16.56	0.77	16.47	0.81	16.37	0.85	16.22	0.91
3100 CFM	-13	3.71	2.06	3.44	2.13	3.23	2.19	3.09	2.23	2.95	2.26	2.74	2.32
	-10	4.35	2.06	4.08	2.13	3.87	2.19	3.73	2.23	3.59	2.26	3.38	2.32
	-5	5.44	2.06	5.16	2.13	4.95	2.19	4.81	2.23	4.67	2.26	4.46	2.31
	0	6.55	2.05	6.27	2.13	6.06	2.19	5.92	2.22	5.77	2.26	5.56	2.31
	5	7.68	2.05	7.40	2.12	7.18	2.18	7.04	2.22	6.90	2.25	6.68	2.31
	10	8.84	2.04	8.55	2.12	8.33	2.17	8.19	2.21	8.04	2.25	7.82	2.30
	15	10.02	1.36	9.73	1.44	9.51	1.49	9.36	1.53	9.21	1.57	8.98	1.62
	20	11.23	1.34	10.93	1.42	10.70	1.48	10.55	1.52	10.40	1.56	10.17	1.61
	25	12.46	1.32	12.15	1.40	11.92	1.46	11.76	1.50	11.60	1.54	11.37	1.59
	30	13.72	1.30	13.40	1.38	13.16	1.44	13.00	1.48	12.83	1.52	12.59	1.57
	35	15.00	1.27	14.67	1.35	14.42	1.41	14.25	1.45	14.09	1.49	13.83	1.55
	40	16.31	1.24	15.96	1.32	15.71	1.38	15.53	1.42	15.36	1.46	15.09	1.52
	45	16.96	0.66	16.77	0.74	16.63	0.80	16.53	0.84	16.43	0.88	16.28	0.94
	50	16.96	0.64	16.77	0.72	16.63	0.78	16.53	0.83	16.43	0.86	16.28	0.92
	55	16.96	0.62	16.77	0.71	16.63	0.77	16.53	0.81	16.43	0.85	16.28	0.91
	60	16.96	0.61	16.77	0.70	16.63	0.76	16.53	0.80	16.43	0.84	16.28	0.90
	65	16.96	0.61	16.77	0.69	16.63	0.75	16.53	0.79	16.43	0.83	16.28	0.89
3500 CFM	-13	3.72	2.02	3.45	2.10	3.24	2.16	3.10	2.19	2.96	2.23	2.75	2.28
	-10	4.36	2.02	4.09	2.10	3.88	2.16	3.74	2.19	3.60	2.23	3.39	2.28
	-5	5.45	2.02	5.18	2.10	4.97	2.15	4.83	2.19	4.69	2.23	4.47	2.28
	0	6.57	2.02	6.29	2.10	6.08	2.15	5.94	2.19	5.79	2.22	5.58	2.27
	5	7.71	2.02	7.42	2.09	7.21	2.15	7.06	2.18	6.92	2.22	6.70	2.27
	10	8.87	2.01	8.58	2.08	8.36	2.14	8.21	2.18	8.07	2.21	7.85	2.26
	15	10.06	1.34	9.76	1.41	9.54	1.47	9.39	1.51	9.24	1.54	9.01	1.60
	20	11.27	1.32	10.96	1.40	10.73	1.46	10.58	1.50	10.43	1.53	10.20	1.58
	25	12.50	1.30	12.19	1.38	11.96	1.44	11.80	1.48	11.64	1.51	11.40	1.57
	30	13.76	1.28	13.44	1.36	13.20	1.42	13.04	1.46	12.87	1.49	12.63	1.55
	35	15.05	1.25	14.72	1.33	14.47	1.39	14.30	1.43	14.13	1.47	13.88	1.52
	40	16.36	1.22	16.01	1.30	15.76	1.36	15.58	1.40	15.41	1.44	15.14	1.50
	45	17.02	0.65	16.83	0.73	16.68	0.79	16.59	0.83	16.49	0.87	16.34	0.93
	50	17.02	0.63	16.83	0.71	16.68	0.77	16.59	0.81	16.49	0.85	16.34	0.91
	55	17.02	0.61	16.83	0.70	16.68	0.76	16.59	0.80	16.49	0.84	16.34	0.89
	60	17.02	0.60	16.83	0.68	16.68	0.75	16.59	0.79	16.49	0.83	16.34	0.88
	65	17.02	0.60	16.83	0.68	16.68	0.74	16.59	0.78	16.49	0.82	16.34	0.87

TC: Condensor Total Capacity (1,000 BTU/h) Net TC = TC + Blower input

PI: Power input(kW) Compressor + outdoor fan System PI = PI + Blower input

Note: TC represents the condensor's heat load and do not account for the blower input. To calculate the net capacity, add the blower input from the value.

is shown as reference data.

The blank areas indicate that operation at this compressor speed is not possible under those conditions.

ID DB		61		65		68		70		72		75	
ID CFM	OD WB	TC	PI	TC	PI	TC	PI	TC	PI	TC	PI	TC	PI
2700 CFM	-13	30.41	5.70	29.64	5.89	29.07	6.02	28.68	6.11	28.29	6.21	27.69	6.35
	-10	32.78	5.77	32.03	5.96	31.46	6.10	31.08	6.19	30.68	6.29	30.09	6.43
	-5	37.08	5.89	36.34	6.09	35.78	6.24	35.40	6.33	35.01	6.44	34.43	6.59
	0	41.81	6.02	41.07	6.22	40.52	6.38	40.15	6.48	39.76	6.59	39.17	6.75
	5	46.97	6.15	46.23	6.37	45.68	6.53	45.31	6.64	44.92	6.76	44.33	6.93
	10	52.56	6.29	51.81	6.52	51.25	6.70	50.88	6.81	50.49	6.93	49.89	7.11
	15	58.58	5.68	57.82	5.92	57.25	6.10	56.88	6.22	56.47	6.34	55.87	6.52
	20	65.03	5.84	64.25	6.10	63.67	6.29	63.29	6.41	62.87	6.54	62.25	6.73
	25	71.91	6.00	71.11	6.27	70.51	6.47	70.11	6.60	69.68	6.74	69.04	6.94
	30	79.22	6.16	78.39	6.44	77.77	6.65	77.36	6.79	76.91	6.93	76.25	7.14
	35	86.96	6.31	86.09	6.61	85.45	6.83	85.02	6.98	84.55	7.12	83.86	7.34
	40	95.13	6.46	94.22	6.77	93.54	7.01	93.09	7.16	92.61	7.31	91.88	7.54
	45	103.73	6.61	102.78	6.94	102.06	7.18	101.59	7.34	101.08	7.50	100.31	7.74
	50	112.76	6.76	111.76	7.09	111.00	7.35	110.50	7.52	109.96	7.69	109.15	7.94
	55	122.23	6.90	121.16	7.25	120.36	7.52	119.82	7.69	119.26	7.87	118.40	8.13
	60	132.12	7.04	130.99	7.40	130.13	7.68	129.57	7.86	128.97	8.05		
	65	142.44	7.17	141.24	7.56	140.33	7.84	139.73	8.03				
3100 CFM	-13	30.71	5.51	29.94	5.69	29.35	5.82	28.97	5.91	28.56	6.00	27.96	6.13
	-10	33.11	5.58	32.34	5.76	31.77	5.89	31.38	5.98	30.99	6.08	30.39	6.22
	-5	37.45	5.69	36.69	5.88	36.13	6.02	35.75	6.12	35.36	6.22	34.77	6.36
	0	42.22	5.81	41.47	6.01	40.92	6.16	40.54	6.26	40.15	6.37	39.56	6.52
	5	47.43	5.94	46.68	6.15	46.13	6.31	45.75	6.42	45.36	6.53	44.76	6.69
	10	53.07	6.08	52.32	6.30	51.76	6.47	51.38	6.58	50.98	6.70	50.38	6.87
	15	59.15	5.49	58.39	5.72	57.82	5.89	57.44	6.01	57.03	6.13	56.42	6.30
	20	65.67	5.65	64.88	5.89	64.30	6.07	63.91	6.20	63.49	6.32	62.86	6.50
	25	72.61	5.80	71.81	6.06	71.20	6.25	70.80	6.38	70.37	6.51	69.72	6.70
	30	80.00	5.95	79.16	6.22	78.53	6.43	78.12	6.56	77.67	6.70	77.00	6.90
	35	87.81	6.10	86.94	6.38	86.29	6.60	85.85	6.74	85.38	6.88	84.68	7.10
	40	96.07	6.24	95.15	6.54	94.47	6.77	94.01	6.92	93.52	7.07	92.78	7.29
	45	104.75	6.39	103.79	6.70	103.07	6.93	102.58	7.09	102.07	7.25	101.30	7.48
	50	113.87	6.53	112.86	6.85	112.09	7.10	111.58	7.26	111.04	7.43	110.23	7.67
	55	123.43	6.66	122.35	7.00	121.54	7.26	121.00	7.43	120.43	7.60	119.57	7.86
	60	133.42	6.80	132.27	7.15	131.41	7.42	130.84	7.60	130.23	7.78	129.32	8.04
	65	143.85	6.93	142.63	7.30	141.71	7.58	141.10	7.76	140.46	7.95		
3500 CFM	-13	30.75	5.31	29.97	5.48	29.39	5.60	29.00	5.69	28.60	5.78	27.99	5.91
	-10	33.15	5.37	32.38	5.55	31.80	5.68	31.42	5.76	31.02	5.85	30.43	5.99
	-5	37.49	5.48	36.74	5.67	36.17	5.80	35.79	5.90	35.40	5.99	34.81	6.13
	0	42.27	5.60	41.52	5.79	40.96	5.94	40.59	6.04	40.20	6.13	39.61	6.28
	5	47.48	5.72	46.74	5.93	46.18	6.08	45.81	6.18	45.41	6.29	44.82	6.45
	10	53.14	5.85	52.38	6.07	51.82	6.23	51.44	6.34	51.04	6.45	50.44	6.62
	15	59.22	5.29	58.46	5.51	57.88	5.68	57.50	5.79	57.09	5.90	56.48	6.07
	20	65.74	5.44	64.96	5.67	64.37	5.85	63.98	5.97	63.56	6.09	62.94	6.27
	25	72.70	5.59	71.89	5.84	71.29	6.02	70.88	6.15	70.45	6.27	69.80	6.46
	30	80.09	5.73	79.25	5.99	78.62	6.19	78.21	6.32	77.76	6.45	77.08	6.65
	35	87.92	5.88	87.04	6.15	86.39	6.36	85.95	6.49	85.48	6.63	84.78	6.84
	40	96.18	6.02	95.26	6.30	94.57	6.52	94.12	6.66	93.63	6.81	92.89	7.02
	45	104.87	6.15	103.91	6.45	103.19	6.68	102.70	6.83	102.19	6.98	101.42	7.21
	50	114.01	6.29	112.99	6.60	112.22	6.84	111.71	7.00	111.17	7.15	110.35	7.39
	55	123.57	6.42	122.49	6.75	121.68	6.99	121.14	7.16	120.57	7.32	119.71	7.57
	60	133.57	6.55	132.43	6.89	131.57	7.15	130.99	7.32	130.39	7.49	129.47	7.75
	65	144.01	6.68	142.79	7.03	141.88	7.30	141.27	7.48	140.62	7.66	139.65	7.92

TC: Condensor Total Capacity (1,000 BTU/h) Net TC = TC + Blower input

PI: Power input(kW) Compressor + outdoor fan System PI = PI + Blower input

Note: TC represents the condensor's heat load and do not account for the blower input. To calculate the net capacity, add the blower input from the value.

is shown as reference data.

The blank areas indicate that operation at this compressor speed is not possible under those conditions.

ID DB		61		65		68		70		72		75	
ID CFM	OD WB	TC	PI	TC	PI	TC	PI	TC	PI	TC	PI	TC	PI
2700 CFM	-13	56.86	10.64	55.89	10.96	55.16	11.20	54.67	11.36	54.20	11.53	53.49	11.79
	-10	60.63	10.86	59.67	11.18	58.95	11.42	58.47	11.58	57.99	11.75	57.27	12.00
	-5	67.34	11.22	66.39	11.54	65.67	11.78	65.20	11.94	64.72	12.10	63.99	12.36
	0	74.57	11.56	73.63	11.88	72.92	12.12	72.45	12.28	71.96	12.45	71.85	12.70
	5	82.33	11.89	81.39	12.21	80.69	12.45	80.22	12.61	80.32	12.70	78.43	12.70
	10	90.63	12.19	89.68	12.52	89.72	12.70	88.30	12.70	87.10	12.70	85.31	12.70
	15	99.45	12.48	99.10	12.70	96.85	12.70	95.38	12.70	94.35	12.70	92.80	12.70
	20	109.34	12.70	106.64	12.70	104.62	12.70	103.28	12.70	102.12	12.70	100.37	12.70
	25	117.07	12.70	114.49	12.70	112.55	12.70	111.26	12.70	109.96	12.70	108.00	12.70
	30	125.82	12.70	122.93	12.70	120.76	12.70	119.31	12.70	117.87	12.70	115.70	12.70
	35	134.67	12.70	131.46	12.70	129.04	12.70	127.44	12.70	125.85	12.70	123.47	12.70
	40	143.61	12.70	140.07	12.70	137.41	12.70	135.64	12.70	133.91	12.70	129.43	12.34
	45	152.65	12.70	148.76	12.70	145.85	12.70	143.91	12.70	142.03	12.70	129.91	11.06
	50	161.78	12.70	157.55	12.70	154.37	12.70	151.70	12.61	143.00	11.51	130.28	9.95
	55	171.00	12.70	166.41	12.70	161.18	12.42	152.12	11.39	143.36	10.39	130.57	8.99
	60	180.31	12.70	175.37	12.70	161.59	11.26	152.45	10.32	143.64	9.41	130.77	8.14
	65	189.72	12.70	176.09	11.58	161.90	10.23	152.70	9.37	143.84	8.56	130.91	7.40
3100 CFM	-13	57.51	10.23	56.53	10.54	55.79	10.78	55.29	10.93	54.81	11.10	54.09	11.34
	-10	61.32	10.45	60.35	10.76	59.62	10.99	59.13	11.14	58.65	11.30	57.92	11.55
	-5	68.10	10.80	67.14	11.10	66.42	11.33	65.94	11.48	65.45	11.65	64.72	11.89
	0	75.42	11.12	74.47	11.43	73.75	11.66	73.28	11.81	72.78	11.98	72.03	12.22
	5	83.27	11.44	82.32	11.75	81.61	11.98	81.13	12.13	80.63	12.30	79.87	12.55
	10	91.66	11.73	90.70	12.05	89.99	12.28	89.51	12.44	88.99	12.62	87.96	12.70
	15	100.58	12.01	99.62	12.33	98.89	12.58	98.35	12.70	97.28	12.70	95.69	12.70
	20	110.04	12.26	109.06	12.60	107.67	12.65	106.49	12.70	105.29	12.70	103.49	12.70
	25	120.04	12.50	118.05	12.70	116.05	12.70	114.72	12.70	113.37	12.70	111.36	12.70
	30	129.74	12.70	126.75	12.70	124.51	12.70	123.02	12.70	121.53	12.70	119.30	12.70
	35	138.86	12.70	135.54	12.70	133.06	12.70	131.40	12.70	129.76	12.70	127.31	12.70
	40	148.08	12.70	144.42	12.70	141.68	12.70	139.85	12.70	138.07	12.70	135.40	12.70
	45	157.40	12.70	153.39	12.70	150.39	12.70	148.39	12.70	146.45	12.70	143.55	12.70
	50	166.81	12.70	162.45	12.70	159.18	12.70	156.99	12.70	154.91	12.70	131.77	9.57
	55	176.32	12.70	171.59	12.70	168.04	12.70	165.68	12.70	144.99	10.00	132.05	8.65
	60	185.92	12.70	180.82	12.70	176.99	12.70	154.19	9.92	145.28	9.06	132.26	7.83
	65	195.62	12.70	190.14	12.70	163.75	9.84	154.44	9.02	145.48	8.23	132.40	7.12
3500 CFM	-13	57.89	9.93	56.90	10.23	56.15	10.45	55.66	10.60	55.17	10.76	54.45	11.00
	-10	61.73	10.14	60.75	10.43	60.01	10.66	59.52	10.81	59.03	10.96	58.30	11.20
	-5	68.55	10.47	67.58	10.77	66.86	10.99	66.38	11.14	65.88	11.29	65.14	11.53
	0	75.92	10.79	74.96	11.09	74.24	11.31	73.76	11.46	73.26	11.62	72.51	11.86
	5	83.82	11.09	82.86	11.39	82.14	11.62	81.66	11.77	81.16	11.93	80.39	12.17
	10	92.26	11.38	91.30	11.68	90.58	11.92	90.10	12.07	89.58	12.24	88.80	12.49
	15	101.25	11.64	100.27	11.96	99.54	12.20	99.05	12.36	98.53	12.53	96.32	12.32
	20	110.77	11.89	109.78	12.23	109.03	12.47	108.54	12.64	105.98	12.32	104.17	12.32
	25	120.83	12.13	119.81	12.47	116.81	12.32	115.47	12.32	114.12	12.32	112.09	12.32
	30	131.43	12.34	127.59	12.32	125.33	12.32	123.83	12.32	122.33	12.32	120.08	12.32
	35	142.57	12.59	136.44	12.32	133.93	12.32	132.26	12.32	130.62	12.32	128.15	12.32
	40	149.05	12.32	145.37	12.32	142.61	12.32	140.77	12.32	138.98	12.32	136.29	12.32
	45	158.43	12.32	154.40	12.32	151.38	12.32	149.36	12.32	147.41	12.32	144.49	12.32
	50	167.90	12.32	163.51	12.32	160.22	12.32	158.03	12.32	155.92	12.32	152.77	12.32
	55	177.48	12.32	172.72	12.32	169.15	12.32	166.77	12.32	164.51	12.32	161.12	12.32
	60	187.14	12.32	182.01	12.32	178.16	12.32	175.59	12.32	173.17	12.32	165.36	11.72
	65	196.91	12.32	191.39	12.32	187.25	12.32	184.49	12.32	181.89	12.32	165.54	10.65

TC: Condensor Total Capacity (1,000 BTU/h) Net TC = TC + Blower input

PI: Power input(kW) Compressor + outdoor fan System PI = PI + Blower input

Note: TC represents the condensor's heat load and do not account for the blower input. To calculate the net capacity, add the blower input from the value.

is shown as reference data.

The blank areas indicate that operation at this compressor speed is not possible under those conditions.

ID DB		61		65		68		70		72		75	
ID CFM	OD WB	TC	PI	TC	PI	TC	PI	TC	PI	TC	PI	TC	PI
3200 CFM	-13	3.58	1.98	3.31	2.05	3.11	2.10	2.97	2.14	2.84	2.18	2.64	2.23
	-10	4.21	1.98	3.94	2.05	3.74	2.10	3.60	2.14	3.47	2.18	3.27	2.23
	-5	5.28	1.97	5.01	2.05	4.80	2.10	4.67	2.14	4.53	2.17	4.33	2.22
	0	6.36	1.97	6.09	2.04	5.89	2.10	5.75	2.14	5.61	2.17	5.41	2.22
	5	7.47	1.96	7.20	2.04	6.99	2.09	6.85	2.13	6.71	2.16	6.50	2.21
	10	8.61	1.96	8.32	2.03	8.11	2.09	7.97	2.12	7.83	2.16	7.61	2.21
	15	9.76	1.47	9.47	1.54	9.26	1.60	9.11	1.64	8.97	1.67	8.75	1.72
	20	10.93	1.45	10.64	1.53	10.42	1.59	10.27	1.62	10.12	1.66	9.90	1.71
	25	12.13	1.43	11.83	1.51	11.60	1.57	11.45	1.61	11.30	1.64	11.06	1.69
	30	13.35	1.41	13.04	1.49	12.80	1.54	12.65	1.58	12.49	1.62	12.25	1.67
	35	14.58	1.38	14.26	1.46	14.02	1.52	13.86	1.56	13.70	1.59	13.45	1.65
	40	15.85	1.34	15.51	1.42	15.26	1.48	15.10	1.52	14.93	1.56	14.67	1.62
	45	17.13	0.62	16.78	0.70	16.52	0.76	16.35	0.80	16.17	0.84	15.91	0.89
	50	17.53	0.60	17.33	0.68	17.18	0.75	17.08	0.79	16.97	0.82	16.81	0.88
	55	17.53	0.58	17.33	0.67	17.18	0.73	17.08	0.77	16.97	0.81	16.81	0.86
	60	17.53	0.56	17.33	0.65	17.18	0.71	17.08	0.75	16.97	0.79	16.81	0.84
	65	17.53	0.55	17.33	0.63	17.18	0.69	17.08	0.73	16.97	0.76	16.81	0.82
3600 CFM	-13	3.59	1.94	3.32	2.02	3.12	2.07	2.98	2.11	2.85	2.14	2.65	2.19
	-10	4.22	1.94	3.95	2.02	3.75	2.07	3.61	2.11	3.48	2.14	3.28	2.19
	-5	5.29	1.94	5.02	2.02	4.82	2.07	4.68	2.11	4.55	2.14	4.34	2.19
	0	6.39	1.94	6.11	2.01	5.91	2.07	5.77	2.10	5.63	2.14	5.42	2.18
	5	7.50	1.93	7.22	2.01	7.01	2.06	6.87	2.10	6.73	2.13	6.52	2.18
	10	8.63	1.93	8.35	2.00	8.14	2.05	8.00	2.09	7.86	2.12	7.64	2.17
	15	9.79	1.45	9.50	1.52	9.29	1.58	9.14	1.61	9.00	1.65	8.77	1.70
	20	10.97	1.43	10.67	1.51	10.45	1.56	10.31	1.60	10.15	1.63	9.93	1.68
	25	12.17	1.41	11.87	1.49	11.64	1.54	11.49	1.58	11.33	1.61	11.10	1.67
	30	13.39	1.39	13.08	1.46	12.84	1.52	12.69	1.56	12.53	1.59	12.29	1.65
	35	14.63	1.36	14.31	1.43	14.07	1.49	13.91	1.53	13.74	1.57	13.49	1.62
	40	15.90	1.32	15.56	1.40	15.31	1.46	15.14	1.50	14.97	1.54	14.72	1.59
	45	17.18	0.61	16.84	0.69	16.57	0.75	16.40	0.79	16.23	0.83	15.96	0.88
	50	17.59	0.59	17.39	0.67	17.24	0.73	17.14	0.77	17.03	0.81	16.87	0.87
	55	17.59	0.57	17.39	0.66	17.24	0.72	17.14	0.76	17.03	0.79	16.87	0.85
	60	17.59	0.56	17.39	0.64	17.24	0.70	17.14	0.74	17.03	0.77	16.87	0.83
	65	17.59	0.54	17.39	0.62	17.24	0.67	17.14	0.71	17.03	0.75	16.87	0.81
4000 CFM	-13	3.60	1.92	3.33	1.99	3.12	2.05	2.99	2.08	2.86	2.11	2.66	2.16
	-10	4.23	1.92	3.96	1.99	3.76	2.05	3.62	2.08	3.49	2.11	3.29	2.16
	-5	5.31	1.92	5.03	1.99	4.83	2.04	4.69	2.08	4.56	2.11	4.35	2.16
	0	6.40	1.91	6.13	1.99	5.92	2.04	5.78	2.08	5.64	2.11	5.44	2.16
	5	7.52	1.91	7.24	1.98	7.03	2.03	6.89	2.07	6.75	2.10	6.54	2.15
	10	8.66	1.90	8.37	1.97	8.16	2.03	8.02	2.06	7.88	2.10	7.66	2.15
	15	9.82	1.43	9.53	1.50	9.31	1.56	9.17	1.59	9.02	1.62	8.80	1.67
	20	11.00	1.41	10.70	1.49	10.48	1.54	10.33	1.58	10.18	1.61	9.95	1.66
	25	12.20	1.39	11.90	1.47	11.67	1.52	11.52	1.56	11.36	1.59	11.13	1.65
	30	13.42	1.37	13.11	1.44	12.88	1.50	12.72	1.54	12.56	1.57	12.32	1.62
	35	14.67	1.34	14.35	1.42	14.10	1.47	13.94	1.51	13.78	1.55	13.53	1.60
	40	15.94	1.30	15.60	1.38	15.35	1.44	15.18	1.48	15.01	1.52	14.76	1.57
	45	17.23	0.61	16.88	0.68	16.62	0.74	16.44	0.78	16.27	0.82	16.00	0.87
	50	17.64	0.59	17.43	0.67	17.28	0.72	17.18	0.76	17.07	0.80	16.91	0.85
	55	17.64	0.57	17.43	0.65	17.28	0.71	17.18	0.75	17.07	0.78	16.91	0.84
	60	17.64	0.55	17.43	0.63	17.28	0.69	17.18	0.73	17.07	0.76	16.91	0.82
	65	17.64	0.53	17.43	0.61	17.28	0.67	17.18	0.71	17.07	0.74	16.91	0.80

TC: Condensor Total Capacity (1,000 BTU/h) Net TC = TC + Blower input

PI: Power input(kW) Compressor + outdoor fan System PI = PI + Blower input

Note: TC represents the condensor's heat load and do not account for the blower input. To calculate the net capacity, add the blower input from the value.

is shown as reference data.

The blank areas indicate that operation at this compressor speed is not possible under those conditions.

ID DB		61		65		68		70		72		75	
ID CFM	OD WB	TC	PI	TC	PI	TC	PI	TC	PI	TC	PI	TC	PI
3200 CFM	-13	37.40	6.27	36.71	6.44	36.20	6.57	35.85	6.66	35.51	6.75	35.00	6.89
	-10	39.79	6.34	39.11	6.52	38.59	6.65	38.25	6.74	37.90	6.83	37.39	6.98
	-5	44.18	6.46	43.48	6.65	42.96	6.79	42.62	6.88	42.27	6.98	41.74	7.13
	0	49.05	6.58	48.35	6.78	47.82	6.93	47.47	7.03	47.11	7.13	46.57	7.29
	5	54.41	6.71	53.69	6.92	53.15	7.08	52.79	7.19	52.43	7.30	51.88	7.46
	10	60.26	6.85	59.52	7.07	58.97	7.24	58.60	7.35	58.22	7.47	57.65	7.64
	15	66.60	6.48	65.84	6.71	65.27	6.88	64.88	7.00	64.49	7.12	63.90	7.30
	20	73.43	6.64	72.64	6.89	72.04	7.07	71.64	7.20	71.23	7.32	70.62	7.51
	25	80.75	6.81	79.92	7.07	79.30	7.27	78.88	7.40	78.46	7.53	77.81	7.73
	30	88.56	6.98	87.69	7.25	87.04	7.46	86.60	7.59	86.15	7.73	85.48	7.94
	35	96.86	7.14	95.94	7.43	95.26	7.65	94.80	7.79	94.33	7.94	93.62	8.16
	40	105.65	7.30	104.68	7.61	103.96	7.83	103.47	7.99	102.97	8.14	102.23	8.38
	45	114.92	7.46	113.90	7.78	113.14	8.02	112.63	8.18	112.10	8.35	111.31	8.59
	50	124.69	7.62	123.61	7.96	122.80	8.21	122.26	8.38	121.70	8.55	120.86	8.81
	55	134.95	7.78	133.80	8.13	132.94	8.40	132.37	8.57	131.78	8.76	130.89	9.03
	60	145.69	7.93	144.47	8.30	143.56	8.58	142.95	8.77	142.33	8.96	141.39	9.24
	65	156.93	8.08	155.63	8.48	154.67	8.77	154.02	8.96	153.36	9.16		
3600 CFM	-13	37.71	6.10	37.01	6.27	36.49	6.39	36.15	6.48	35.80	6.57	35.29	6.70
	-10	40.12	6.17	39.43	6.34	38.91	6.47	38.56	6.56	38.21	6.65	37.69	6.79
	-5	44.54	6.29	43.84	6.47	43.32	6.61	42.97	6.70	42.61	6.79	42.09	6.94
	0	49.45	6.41	48.74	6.60	48.21	6.75	47.86	6.84	47.50	6.94	46.96	7.10
	5	54.86	6.54	54.13	6.74	53.59	6.89	53.23	7.00	52.86	7.10	52.30	7.26
	10	60.76	6.67	60.01	6.89	59.45	7.05	59.08	7.16	58.70	7.27	58.12	7.44
	15	67.15	6.30	66.38	6.53	65.80	6.70	65.42	6.81	65.02	6.93	64.42	7.10
	20	74.03	6.47	73.23	6.71	72.63	6.89	72.23	7.01	71.82	7.13	71.20	7.31
	25	81.41	6.63	80.58	6.88	79.95	7.07	79.53	7.20	79.10	7.33	78.45	7.52
	30	89.29	6.79	88.41	7.06	87.75	7.26	87.31	7.39	86.86	7.53	86.18	7.73
	35	97.65	6.95	96.73	7.23	96.04	7.44	95.58	7.58	95.10	7.73	94.38	7.94
	40	106.51	7.11	105.54	7.40	104.81	7.63	104.32	7.77	103.82	7.93	103.06	8.15
	45	115.87	7.26	114.84	7.57	114.07	7.81	113.55	7.96	113.02	8.12	112.22	8.36
	50	125.71	7.42	124.62	7.74	123.81	7.99	123.26	8.16	122.70	8.32	121.85	8.57
	55	136.05	7.57	134.90	7.91	134.03	8.17	133.45	8.35	132.86	8.52	131.96	8.78
	60	146.89	7.72	145.66	8.08	144.74	8.35	144.13	8.54	143.50	8.72	142.55	9.00
	65	158.21	7.87	156.91	8.25	155.93	8.54	155.28	8.73	154.61	8.92	153.61	9.21
4000 CFM	-13	37.75	5.93	37.06	6.09	36.54	6.22	36.19	6.30	35.85	6.38	35.33	6.51
	-10	40.17	6.00	39.47	6.16	38.95	6.29	38.61	6.37	38.26	6.46	37.74	6.60
	-5	44.59	6.11	43.89	6.29	43.37	6.42	43.02	6.51	42.67	6.60	42.14	6.75
	0	49.51	6.23	48.80	6.42	48.27	6.56	47.91	6.65	47.55	6.75	47.01	6.90
	5	54.92	6.35	54.20	6.55	53.65	6.70	53.29	6.80	52.92	6.90	52.36	7.06
	10	60.83	6.48	60.08	6.69	59.52	6.85	59.15	6.96	58.77	7.07	58.19	7.23
	15	67.23	6.13	66.46	6.35	65.88	6.51	65.49	6.62	65.10	6.73	64.50	6.91
	20	74.12	6.29	73.32	6.52	72.72	6.69	72.32	6.81	71.90	6.93	71.28	7.11
	25	81.51	6.44	80.67	6.69	80.05	6.87	79.63	7.00	79.19	7.12	78.54	7.31
	30	89.39	6.60	88.51	6.86	87.86	7.05	87.42	7.18	86.96	7.32	86.28	7.52
	35	97.77	6.75	96.85	7.03	96.15	7.23	95.69	7.37	95.21	7.51	94.49	7.72
	40	106.64	6.91	105.67	7.20	104.93	7.41	104.45	7.56	103.94	7.70	103.19	7.92
	45	116.00	7.06	114.97	7.36	114.20	7.59	113.69	7.74	113.15	7.90	112.35	8.13
	50	125.86	7.21	124.77	7.53	123.95	7.77	123.41	7.93	122.84	8.09	122.00	8.33
	55	136.21	7.36	135.06	7.69	134.19	7.94	133.61	8.11	133.02	8.28	132.12	8.54
	60	147.06	7.50	145.83	7.86	144.91	8.12	144.30	8.30	143.67	8.48	142.72	8.74
	65	158.40	7.65	157.10	8.02	156.12	8.30	155.47	8.48	154.80	8.67	153.80	8.95

TC: Condensor Total Capacity (1,000 BTU/h) Net TC = TC + Blower input

PI: Power input(kW) Compressor + outdoor fan System PI = PI + Blower input

Note: TC represents the condensor's heat load and do not account for the blower input. To calculate the net capacity, add the blower input from the value.

is shown as reference data.

The blank areas indicate that operation at this compressor speed is not possible under those conditions.

ID DB		61		65		68		70		72		75	
ID CFM	OD WB	TC	PI	TC	PI	TC	PI	TC	PI	TC	PI	TC	PI
3200 CFM	-13	57.17	10.21	56.30	10.56	55.65	10.82	55.22	11.00	54.75	11.17	54.06	11.43
	-10	61.04	10.44	60.17	10.78	59.51	11.04	59.08	11.21	58.61	11.38	57.91	11.64
	-5	67.91	10.81	67.03	11.15	66.37	11.40	65.93	11.57	65.46	11.73	64.74	11.98
	0	75.31	11.17	74.42	11.50	73.76	11.75	73.31	11.91	72.83	12.08	72.10	12.33
	5	83.25	11.51	82.35	11.84	81.67	12.08	81.22	12.25	80.72	12.42	79.98	12.67
	10	91.72	11.83	90.80	12.16	90.11	12.41	89.65	12.58	89.14	12.75	88.39	13.01
	15	100.72	12.14	99.78	12.48	99.08	12.73	98.61	12.90	98.09	13.08	95.79	13.12
	20	110.26	12.43	109.29	12.78	108.57	13.04	106.97	13.12	105.39	13.12	103.05	13.12
	25	120.33	12.71	119.34	13.07	115.94	13.12	114.22	13.12	112.95	13.12	111.05	13.12
	30	130.93	12.96	126.62	13.12	124.23	13.12	122.64	13.12	121.23	13.12	119.11	13.12
	35	137.74	13.12	134.81	13.12	132.61	13.12	131.15	13.12	129.59	13.12	127.25	13.12
	40	147.22	13.12	143.89	13.12	141.40	13.12	139.74	13.12	138.03	13.12	135.47	13.12
	45	156.85	13.12	153.10	13.12	150.29	13.12	148.41	13.12	146.55	13.12	143.55	13.09
	50	166.63	13.12	162.43	13.12	159.27	13.12	157.17	13.12	155.15	13.12	144.02	11.76
	55	176.56	13.12	171.87	13.12	168.36	13.12	166.01	13.12	158.46	12.28	144.40	10.62
	60	186.64	13.12	181.44	13.12	177.54	13.12	168.56	12.18	158.87	11.12	144.71	9.61
	65	195.53	13.12	190.39	13.12	178.96	12.08	168.95	11.07	159.20	10.10	144.95	8.74
3600 CFM	-13	57.58	9.90	56.70	10.24	56.04	10.50	55.61	10.67	55.14	10.84	54.44	11.09
	-10	61.47	10.13	60.59	10.46	59.93	10.71	59.49	10.88	59.02	11.04	58.32	11.29
	-5	68.39	10.49	67.50	10.81	66.84	11.06	66.40	11.22	65.92	11.38	65.20	11.62
	0	75.84	10.83	74.95	11.15	74.28	11.39	73.83	11.55	73.34	11.71	72.61	11.96
	5	83.84	11.16	82.93	11.48	82.24	11.72	81.79	11.88	81.29	12.04	80.55	12.29
	10	92.36	11.48	91.44	11.80	90.74	12.04	90.28	12.20	89.77	12.37	89.01	12.62
	15	101.43	11.78	100.49	12.10	99.78	12.35	99.30	12.51	98.78	12.68	98.00	12.94
	20	111.04	12.06	110.07	12.40	109.34	12.65	108.85	12.82	108.32	13.00	105.38	13.12
	25	121.18	12.32	120.18	12.68	119.43	12.94	118.93	13.12	115.50	13.12	113.55	13.12
	30	131.86	12.57	130.83	12.95	126.72	13.06	125.41	13.12	123.97	13.12	121.80	13.12
	35	143.07	12.76	142.01	13.12	135.60	13.12	134.11	13.12	132.51	13.12	130.12	13.12
	40	154.82	13.08	147.14	13.12	144.59	13.12	142.89	13.12	141.14	13.12	138.52	13.12
	45	160.39	13.12	156.56	13.12	153.68	13.12	151.76	13.12	149.86	13.12	147.00	13.12
	50	170.39	13.12	166.09	13.12	162.87	13.12	160.72	13.12	158.65	13.12	155.55	13.12
	55	180.55	13.12	175.75	13.12	172.16	13.12	169.76	13.12	167.52	13.12	145.42	10.30
	60	190.85	13.12	185.54	13.12	181.55	13.12	178.89	13.12	176.48	13.12	145.73	9.33
	65	199.94	13.12	194.68	13.12	190.74	13.12	188.11	13.12	160.32	9.80	145.97	8.47
4000 CFM	-13	57.94	9.67	57.05	10.00	56.39	10.25	55.95	10.42	55.48	10.58	54.78	10.83
	-10	61.85	9.89	60.97	10.21	60.31	10.46	59.86	10.62	59.39	10.78	58.68	11.02
	-5	68.81	10.24	67.92	10.56	67.25	10.79	66.81	10.95	66.33	11.11	65.60	11.35
	0	76.31	10.58	75.41	10.89	74.74	11.12	74.29	11.28	73.80	11.44	73.06	11.67
	5	84.36	10.90	83.44	11.21	82.76	11.44	82.30	11.60	81.80	11.76	81.05	12.00
	10	92.94	11.21	92.01	11.52	91.31	11.75	90.84	11.91	90.33	12.07	89.57	12.32
	15	102.06	11.50	101.11	11.82	100.40	12.06	99.92	12.22	99.40	12.39	98.61	12.64
	20	111.73	11.77	110.75	12.10	110.02	12.35	109.53	12.52	108.99	12.69	108.19	12.96
	25	121.93	12.03	120.93	12.38	120.17	12.64	119.67	12.81	119.12	12.99	114.26	12.81
	30	132.68	12.28	131.64	12.64	130.86	12.91	130.35	13.09	124.74	12.81	122.56	12.81
	35	143.96	12.46	142.89	12.81	142.09	13.07	134.94	12.81	133.34	12.81	130.93	12.81
	40	155.79	12.77	148.06	12.81	145.49	12.81	143.78	12.81	142.02	12.81	139.38	12.81
	45	161.39	12.81	157.53	12.81	154.63	12.81	152.70	12.81	150.79	12.81	147.91	12.81
	50	171.45	12.81	167.13	12.81	163.88	12.81	161.72	12.81	159.64	12.81	156.51	12.81
	55	181.67	12.81	176.85	12.81	173.23	12.81	170.82	12.81	168.57	12.81	165.19	12.81
	60	192.04	12.81	186.69	12.81	182.68	12.81	180.00	12.81	177.58	12.81	173.95	12.81
	65	201.19	12.81	195.89	12.81	191.92	12.81	189.28	12.81	186.68	12.81	178.25	12.19

TC: Condensor Total Capacity (1,000 BTU/h) Net TC = TC + Blower input

PI: Power input(kW) Compressor + outdoor fan System PI = PI + Blower input

Note: TC represents the condensor's heat load and do not account for the blower input. To calculate the net capacity, add the blower input from the value.

is shown as reference data.

The blank areas indicate that operation at this compressor speed is not possible under those conditions.

Static Pressure

3-6 TONS		
DOWNFLOW ECONOMIZER PRESSURE DROP		
Cabinet	CFM	SP in.wg.
3 Ton	900	.03"
	1200	.05"
	1500	.08"
4 Ton	1200	.06"
	1600	.10"
	2000	.14"
5 Ton	1500	.08"
	2000	.14"
	2500	.22"
6 Ton	1800	.13"
	2400	.22"
	3000	.33"

3-6 TONS		
HORIZONTAL ECONOMIZER PRESSURE DROP		
Cabinet	CFM	SP in.wg.
3 Ton	900	.06"
	1200	.11"
	1500	.16"
4 Ton	1200	.11"
	1600	.19"
	2000	.29"
5 Ton	1500	.18"
	2000	.30"
	2500	.45"
6 Ton	1800	.24"
	2400	.41"
	3000	.61"

Electrical Data

Model Number	Electrical Rating	Compressor			Indoor Fan Motor			Optional Electric Heat			Optional Powered Convenience Outlet	Optional Power Exhaust	Power Supply	
		Qty (Comp)	Qty (Fan Motor)	Input Current	Type	HP	FLA	Part #	Kw*	Fla	Fla	Fla	Mca	Mop
DVH0903D	208/230/3/60	1	2	27.30/24.70	1	3.5	11.7	-	-	-	-	-	49.9/49.9	60/60
								-	-	-	9.6/8.7	-	59.5/58.6	70/70
								-	-	-	-	3.3/3.0 (2.4)	54.0/53.6	60/60
								-	-	-	9.6/8.7	3.3/3.0 (2.4)	63.6/62.3	70/70
								EH*D-3M15	11.3/15.0	31.3/36.1	-	-	88.9/95.0	100/100
											9.6/8.7	-	98.5/104	110/110
											-	3.3/3.0 (2.4)	93.1/98.7	100/100
											9.6/8.7	3.3/3.0 (2.4)	103/107	110/110
								EH*D-3M30	21.6/28.8	60.0/69.3	-	-	125/136	125/150
											9.6/8.7	-	135/145	150/150
											-	3.3/3.0 (2.4)	129/140	150/150
											9.6/8.7	3.3/3.0 (2.4)	139/149	150/150
								EH*D-3M45	33.8/45.0	93.8/108	-	-	167/185	175/200
											9.6/8.7	-	177/194	200/200
											-	3.3/3.0 (2.4)	171/189	175/200
											9.6/8.7	3.3/3.0 (2.4)	181/198	200/200
DVH0903W	208/230/3/60	1	2	27.30/24.70	1	3.5	11.7	-	-	-	-	-	49.9/49.9	60/60
								-	-	-	9.6/8.7	-	59.5/58.6	70/70
								-	-	-	-	3.3/3.0 (2.4)	54.0/53.6	60/60
								-	-	-	9.6/8.7	3.3/3.0 (2.4)	63.6/62.3	70/70
								EH*D-3M15	11.3/15.0	31.3/36.1	-	-	88.9/95.0	100/100
											9.6/8.7	-	98.5/104	110/110
											-	3.3/3.0 (2.4)	93.1/98.7	100/100
											9.6/8.7	3.3/3.0 (2.4)	103/107	110/110
								EH*D-3M30	21.6/28.8	60.0/69.3	-	-	125/136	125/150
											9.6/8.7	-	135/145	150/150
											-	3.3/3.0 (2.4)	129/140	150/150
											9.6/8.7	3.3/3.0 (2.4)	139/149	150/150
								EH*D-3M45	33.8/45.0	93.8/108	-	-	167/185	175/200
											9.6/8.7	-	177/194	200/200
											-	3.3/3.0 (2.4)	171/189	175/200
											9.6/8.7	3.3/3.0 (2.4)	181/198	200/200
DVH0904D	460/3/60	1	2	12	1	3.5	7.2	-	-	-	-	-	24.8	30
								-	-	-	4.3	-	29.1	35
								-	-	-	-	1.2 (1.0)	26.3	30
								-	-	-	4.3	1.2 (1.0)	30.6	35
								EH*D-4M15	15	18	-	-	47.3	50
											4.3	-	51.6	60
											-	1.2 (1.0)	48.8	50
											4.3	1.2 (1.0)	53.1	60
								EH*D-4M30	28.8	34.6	-	-	68.1	70
											4.3	-	72.4	80
											-	1.2 (1.0)	69.6	70
											4.3	1.2 (1.0)	73.9	80
								EH*D-4M45	45	54.1	-	-	92.4	100
											4.3	-	96.7	100
											-	1.2 (1.0)	93.9	100
											4.3	1.2 (1.0)	98.2	100
DVH0904W	460/3/60	1	2	12	1	3.5	7.2	-	-	-	-	-	24.8	30
								-	-	-	4.3	-	29.1	35
								-	-	-	-	1.2 (1.0)	26.3	30
								-	-	-	4.3	1.2 (1.0)	30.6	35
								EH*D-4M15	15	18	-	-	47.3	50
											4.3	-	51.6	60
											-	1.2 (1.0)	48.8	50
											4.3	1.2 (1.0)	53.1	60
								EH*D-4M30	28.8	34.6	-	-	68.1	70
											4.3	-	72.4	80
											-	1.2 (1.0)	69.6	70
											4.3	1.2 (1.0)	73.9	80
								EH*D-4M45	45	54.1	-	-	92.4	100
											4.3	-	96.7	100
											-	1.2 (1.0)	93.9	100
											4.3	1.2 (1.0)	98.2	100

Electrical Data

Model Number	Electrical Rating	Compressor			Indoor Fan Motor			Optional Electric Heat			Optional Powered Convenience Outlet	Optional Power Exhaust	Power Supply	
		Qty (Comp)	Qty (Fan Motor)	Input Current	Type	HP	FLA	Part #	Kw*	Fla	Fla	Fla	Mca	Mop
DVH1023D	208/230/3/60	1	2	32.10/29.20	1	3.5	11.7	-	-	-	-	-	52.7/52.7	60/60
								-	-	-	9.6/8.7	-	62.3/61.4	70/70
								-	-	-	-	3.3/3.0 (2.4)	56.9/56.5	70/70
								-	-	-	9.6/8.7	3.3/3.0 (2.4)	66.5/65.2	80/80
								EH*D-3M15	11.3/15.0	31.3/36.1	-	-	91.8/97.8	100/110
											9.6/8.7	-	101/107	110/110
											-	3.3/3.0 (2.4)	96.0/102	100/110
											9.6/8.7	3.3/3.0 (2.4)	106/110	110/125
								EH*D-3M30	21.6/28.8	60.0/69.3	-	-	128/139	150/150
											9.6/8.7	-	137/148	150/150
											-	3.3/3.0 (2.4)	132/143	150/150
											9.6/8.7	3.3/3.0 (2.4)	142/152	150/175
								EH*D-3M45	33.8/45.0	93.8/108	-	-	170/188	175/200
											9.6/8.7	-	180/197	200/200
											-	3.3/3.0 (2.4)	174/192	175/200
											9.6/8.7	3.3/3.0 (2.4)	184/200	200/225
DVH1023W	208/230/3/60	1	2	32.10/29.20	1	5	15.1	-	-	-	-	-	56.5/56.5	70/70
								-	-	-	9.6/8.7	-	66.1/65.2	80/80
								-	-	-	-	3.3/3.0 (2.4)	60.6/60.2	70/70
								-	-	-	9.6/8.7	3.3/3.0 (2.4)	70.2/68.9	80/80
								EH*D-3M15	11.3/15.0	31.3/36.1	-	-	95.5/102	100/110
											9.6/8.7	-	105/110	125/125
											-	3.3/3.0 (2.4)	99.7/105	110/110
											9.6/8.7	3.3/3.0 (2.4)	109/114	125/125
								EH*D-3M30	21.6/28.8	60.0/69.3	-	-	132/143	150/150
											9.6/8.7	-	141/152	150/175
											-	3.3/3.0 (2.4)	136/147	150/150
											9.6/8.7	3.3/3.0 (2.4)	145/156	150/175
								EH*D-3M45	33.8/45.0	93.8/108	-	-	174/192	175/200
											9.6/8.7	-	183/200	200/225
											-	3.3/3.0 (2.4)	178/196	200/200
											9.6/8.7	3.3/3.0 (2.4)	187/204	200/225
DVH1024D	460/3/60	1	2	14.2	1	3.5	7.2	-	-	-	-	-	26.0	30
								-	-	-	4.3	-	30.3	35
								-	-	-	-	1.2 (1.0)	27.5	35
								-	-	-	4.3	1.2 (1.0)	31.8	35
								EH*D-4M15	15	18	-	-	48.5	50
											4.3	-	52.8	60
											-	1.2 (1.0)	50.0	60
											4.3	1.2 (1.0)	54.3	60
								EH*D-4M30	28.8	34.6	-	-	69.3	70
											4.3	-	73.6	80
											-	1.2 (1.0)	70.8	80
											4.3	1.2 (1.0)	75.1	80
								EH*D-4M45	45	54.1	-	-	93.6	100
											4.3	-	97.9	100
											-	1.2 (1.0)	95.1	100
											4.3	1.2 (1.0)	99.4	100
DVH1024W	460/3/60	1	2	14.2	1	5	10.6	-	-	-	-	-	29.7	35
								-	-	-	4.3	-	34.0	40
								-	-	-	-	1.2 (1.0)	31.2	35
								-	-	-	4.3	1.2 (1.0)	35.5	40
								EH*D-4M15	15	18	-	-	52.3	60
											4.3	-	56.6	60
											-	1.2 (1.0)	53.8	60
											4.3	1.2 (1.0)	58.1	60
								EH*D-4M30	28.8	34.6	-	-	73.0	80
											4.3	-	77.3	80
											-	1.2 (1.0)	74.5	80
											4.3	1.2 (1.0)	78.8	80
								EH*D-4M45	45	54.1	-	-	97.4	100
											4.3	-	102	110
											-	1.2 (1.0)	98.9	100
											4.3	1.2 (1.0)	103	110

Electrical Data

Model Number	Electrical Rating	Compressor			Indoor Fan Motor			Optional Electric Heat			Optional Powered Convenience Outlet	Optional Power Exhaust	Power Supply	
		Qty (Comp)	Qty (Fan Motor)	Input Current	Type	HP	FLA	Part #	Kw*	Fla	Fla	Fla	Mca	Mop
DVH1203D	208/230/3/60	1	2	32.70/29.60	1	3.5	11.7	-	-	-	-	-	54.0/54.0	70/70
								-	-	-	9.6/8.7	-	63.6/62.7	80/70
								-	-	-	-	3.3/3.0 (2.4)	58.2/57.8	70/70
								-	-	-	9.6/8.7	3.3/3.0 (2.4)	67.8/66.5	80/80
								EH*D-3M15	11.3/15.0	31.3/36.1	-	-	93.1/99.1	100/110
											9.6/8.7	-	103/108	110/110
											-	3.3/3.0 (2.4)	97.3/103	110/110
											9.6/8.7	3.3/3.0 (2.4)	107/112	110/125
								EH*D-3M30	21.6/28.8	60.0/69.3	-	-	129/141	150/150
											9.6/8.7	-	139/149	150/150
											-	3.3/3.0 (2.4)	133/144	150/150
											9.6/8.7	3.3/3.0 (2.4)	143/153	150/175
								EH*D-3M45	33.8/45.0	93.8/108	-	-	171/189	175/200
											9.6/8.7	-	181/198	200/200
											-	3.3/3.0 (2.4)	175/193	200/200
											9.6/8.7	3.3/3.0 (2.4)	185/202	200/225
DVH1203W	208/230/3/60	1	2	32.70/29.60	1	5	15.1	-	-	-	-	57.8/57.8	70/70	70/70
								-	-	-	9.6/8.7	67.4/66.5	80/80	80/80
								-	-	-	-	61.9/61.5	70/70	80/80
								-	-	-	9.6/8.7	71.5/70.2	80/80	90/90
								EH*D-3M15	11.3/15.0	31.3/36.1	-	96.9/103	110/110	110/110
											9.6/8.7	106/112	125/125	125/125
											-	101/107	110/110	110/125
											9.6/8.7	111/115	125/125	125/125
								EH*D-3M30	21.6/28.8	60.0/69.3	-	133/144	150/150	150/150
											9.6/8.7	142/153	150/175	150/175
											-	137/148	150/150	150/175
											9.6/8.7	147/157	150/175	150/175
								EH*D-3M45	33.8/45.0	93.8/108	-	175/193	200/200	200/200
											9.6/8.7	185/202	200/225	200/225
											-	179/197	200/200	200/225
											9.6/8.7	189/206	200/225	200/225
DVH1204D	460/3/60	1	2	14.5	1	3.5	7.2	-	-	-	-	-	26.5	35
								-	-	-	4.3	-	30.8	35
								-	-	-	-	1.2 (1.0)	28.0	35
								-	-	-	4.3	1.2 (1.0)	32.3	40
								EH*D-4M15	15	18	-	-	49.1	50
											4.3	-	53.4	60
											-	1.2 (1.0)	50.6	60
											4.3	1.2 (1.0)	54.9	60
								EH*D-4M30	28.8	34.6	-	-	69.8	70
											4.3	-	74.1	80
											-	1.2 (1.0)	71.3	80
											4.3	1.2 (1.0)	75.6	80
								EH*D-4M45	45	54.1	-	-	94.2	100
											4.3	-	98.5	100
											-	1.2 (1.0)	95.7	100
											4.3	1.2 (1.0)	100.0	100
DVH1204W	460/3/60	1	2	14.5	1	5	10.6	-	-	-	-	-	30.3	35
								-	-	-	4.3	-	34.6	40
								-	-	-	-	1.2 (1.0)	31.8	40
								-	-	-	4.3	1.2 (1.0)	36.1	40
								EH*D-4M15	15	18	-	-	52.8	60
											4.3	-	57.1	60
											-	1.2 (1.0)	54.3	60
											4.3	1.2 (1.0)	58.6	60
								EH*D-4M30	28.8	34.6	-	-	73.6	80
											4.3	-	77.9	80
											-	1.2 (1.0)	75.1	80
											4.3	1.2 (1.0)	79.4	80
								EH*D-4M45	45	54.1	-	-	97.9	100
											4.3	-	102	110
											-	1.2 (1.0)	99.4	100
											4.3	1.2 (1.0)	104	110

Wire Diagram

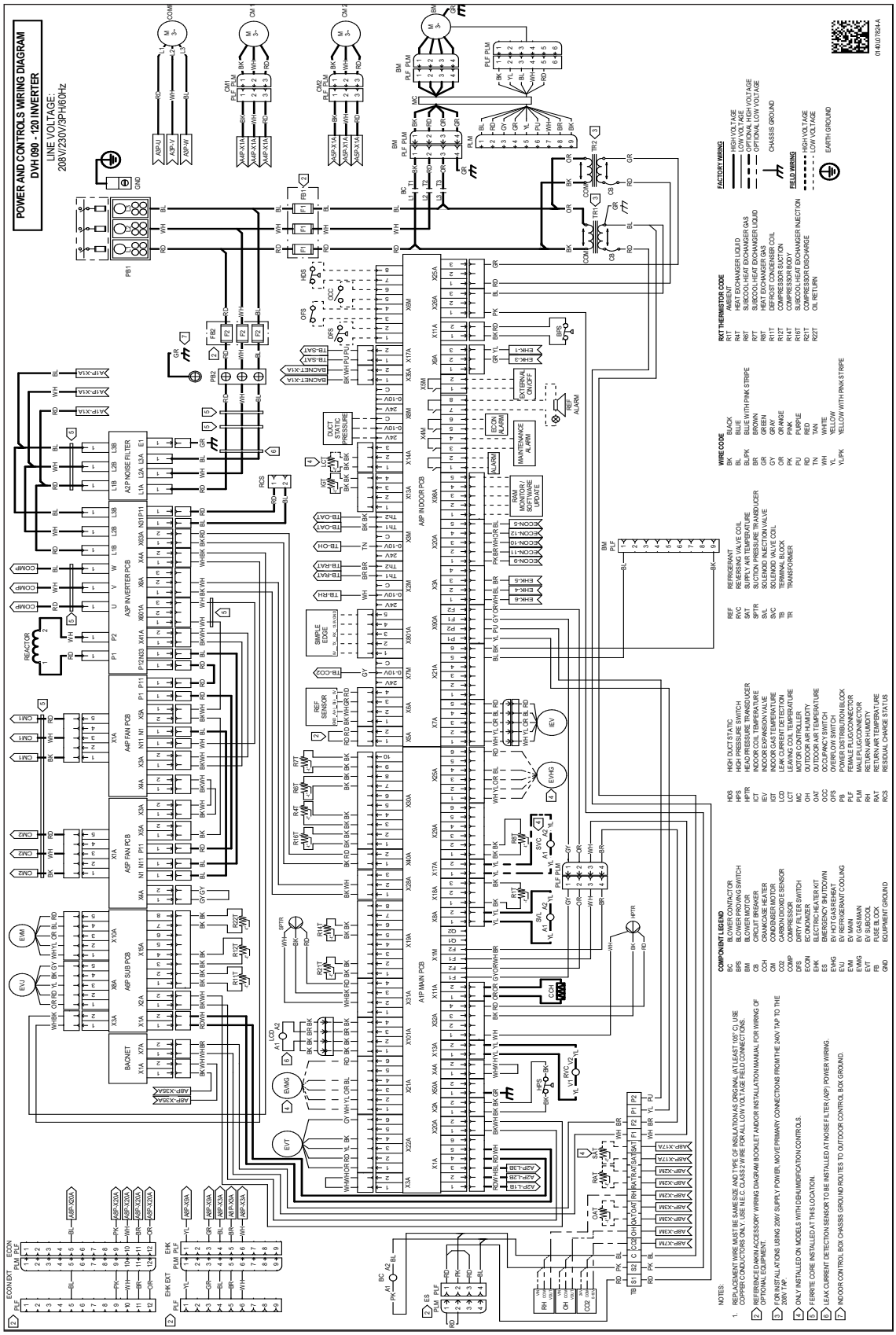

WARNING

High Voltage: Disconnect all power before servicing or installing this unit. Multiple power sources may be present. Failure to do so may cause property damage, personal injury, or death.

Wiring is subject to change. Always refer to the wiring diagram on the unit for the most up-to-date wiring.

Wire Diagram

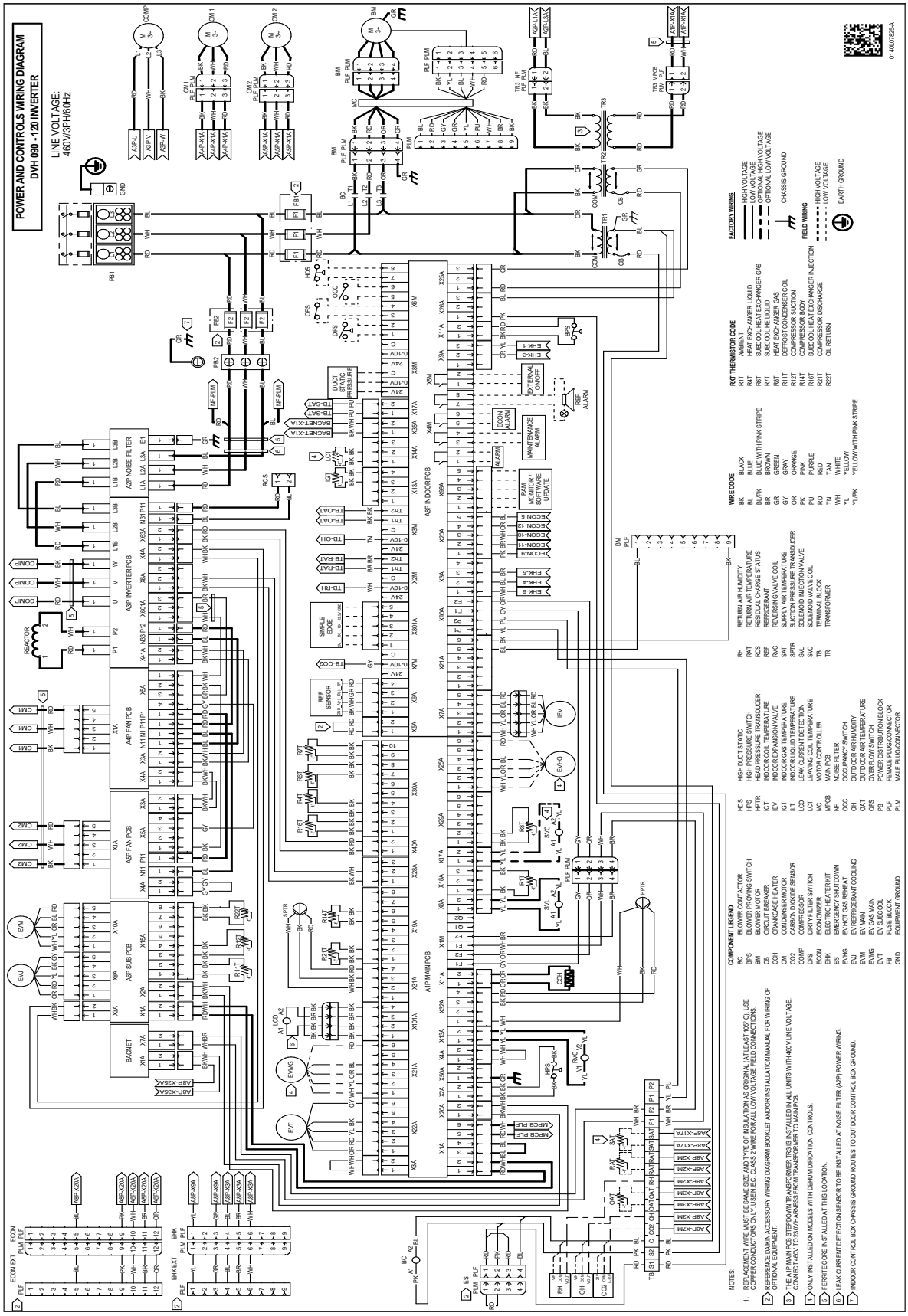
POWER AND CONTROLS WIRING DIAGRAM
DVH 090 - 120 INVERTER
LINE VOLTAGE:
460V/3PH/60Hz
COMPONENT LEGEND
NOTES:
1. REPLACEMENT WIRE MUST BE SAME SIZE AND TYPE OF INSULATION AS ORIGINAL (AT LEAST 105° C). USE COPPER CONDUCTORS ONLY. USE N.E.C. CLASS 2 WIRE FOR ALL LOW VOLTAGE FIELD CONNECTIONS.
2 REFERENCE DAIKIN ACCESSORY WIRING DIAGRAM BOOKLET AND/OR INSTALLATION MANUAL FOR WIRING OF OPTIONAL EQUIPMENT.
3 THE A1P MAIN PCB STEPDOWN TRANSFORMER TR3 IS INSTALLED IN ALL UNITS WITH 460 VLINE VOLTAGE. CONNECT 460V TO 230V HARNESS FROM TRANSFORMER TO MAIN PCB.
4 ONLY INSTALLED ON MODELS WITH DEHUMIDIFICATION CONTROLS.
5 FERRITE CORE INSTALLED AT THIS LOCATION.
6 LEAK CURRENT DETECTION SENSOR TO BE INSTALLED AT NOISE FILTER (A3P) POWER WIRING.
7 INDOOR CONTROL BOX CHASSIS GROUND ROUTES TO OUTDOOR CONTROL BOX GROUND.
FACTORY WIRING
HIGH VOLTAGE
LOW VOLTAGE
OPTIONAL HIGH VOLTAGE
OPTIONAL LOW VOLTAGE
CHASSIS GROUND
FIELD WIRING
HIGH VOLTAGE
LOW VOLTAGE
EARTH GROUND
WIRE CODE
ROT THERMISTOR CODE
A3P NOISE FILTER
A3P INVERTER PCB
A3P FAN PCB
A3P SUB PCB
A1P MAIN PCB
A3P INDOOR PCB
BACNET
REACTOR
COMP
CM1
CM2
EVM
EVU
EVMC
EVT
EVH
EVMG
ECON EXT
EHK EXT
GND
PB1
PB2
NF-PLM
BACNET-XTA
TB-SAT
TB-OAT
TB-OH
TB-RAT
TB-CO2
TB-RH
RCS
IGT
LCT
DUCT STATIC PRESSURE
EXTERNAL ON/OFF
FIRE ALARM
ECON ALARM
MAINTENANCE ALARM
RAM MONITOR / SOFTWARE UPDATE
SIMPLE EDGE
REF SENSOR
HDS
OVC
DFS
IPS
IPS
EHK-1
EHK-3
EHK-4
EHK-5
ECON-9
ECON-10
ECON-11
ECON-12
ECON-13
ECON-14
ECON-15
ECON-16
ECON-17
ECON-18
ECON-19
ECON-20
ECON-21
ECON-22
ECON-23
ECON-24
ECON-25
ECON-26
ECON-27
ECON-28
ECON-29
ECON-30
ECON-31
ECON-32
ECON-33
ECON-34
ECON-35
ECON-36
ECON-37
ECON-38
ECON-39
ECON-40
ECON-41
ECON-42
ECON-43
ECON-44
ECON-45
ECON-46
ECON-47
ECON-48

Electrical Connections

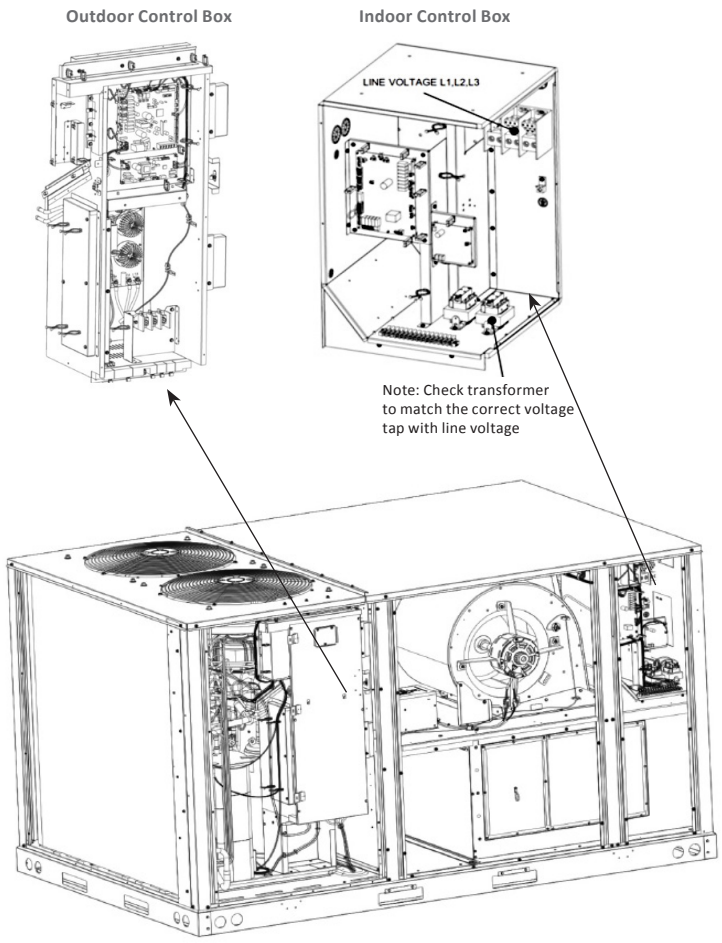

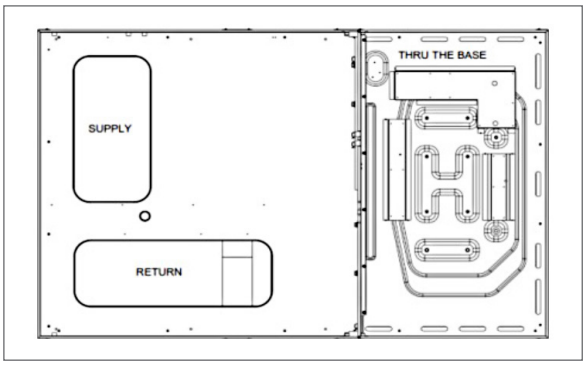

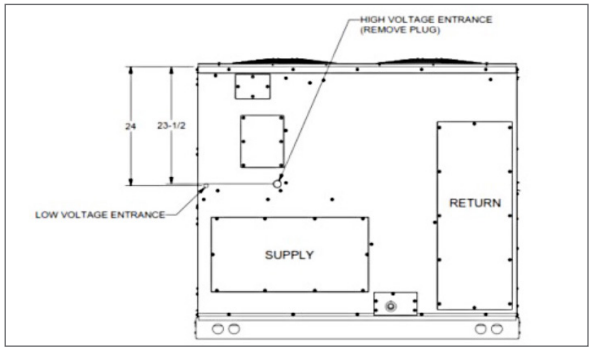

Unit Clearances

Service Clearance

Allow for recommended service clearances as shown in figure to the right. In situations that have multiple units, a 36” minimum clearance is required between the condenser coils. A clearance of 48” is recommended on all sides of the unit to allow service access and to ensure proper ventilation and condenser airflow. The top of the unit should be unobstructed. Provide a roof walkway along the sides of the unit for service and access to controls and components. Contact your Daikin sales representative for service requirements less than those recommended.

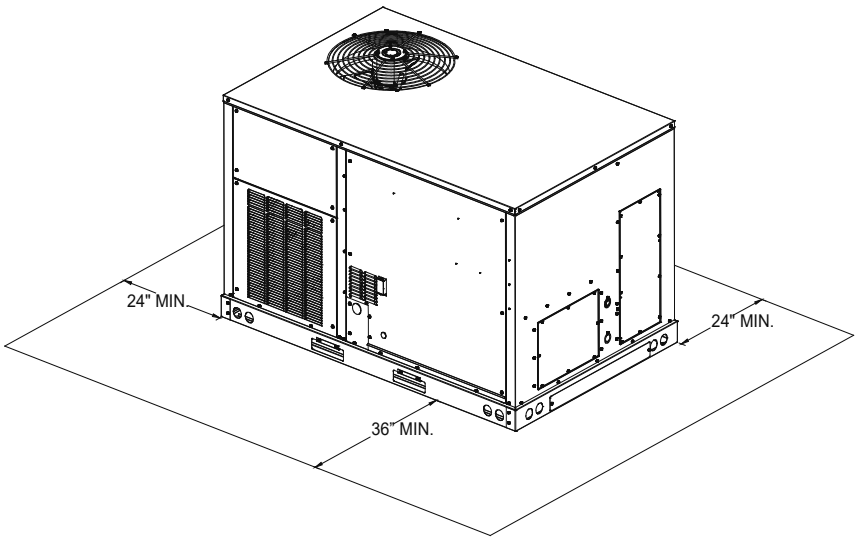

Unit Location

The structural engineer must verify that the roof has adequate support and ability to minimize deflection. Take extreme caution when using on a wooden roof structure. Unit condenser coils should be in a location that avoids any heated exhaust air.

Allow sufficient space around the unit for maintenance/service clearance. Consult your Daikin sales representative if available clearances do not meet minimum recommendations.

Where code considerations, such as the NEC, require extended clearances, these take precedence.

Provisions for forks have been included in the unit base frame. No other fork locations are approved.

» Unit must be lifted by the four lifting holes located at the base frame corners.

» Lifting cables should be attached to the unit with shackles.

» The distance between the crane hook and the top of the unit must not be less than 60".

» Two spreader bars must span over the unit to prevent damage to the cabinet by the lift cables. Spreader bars must be of sufficient length so that cables do not come in contact with the unit during transport. Remove wood struts mounted beneath unit base frame before setting unit on roof curb. These struts are intended to protect unit base frame from forklift damage. To remove the struts, extract the sheet metal retainers and pull the struts through the base of the unit. Refer to rigging label on the unit.

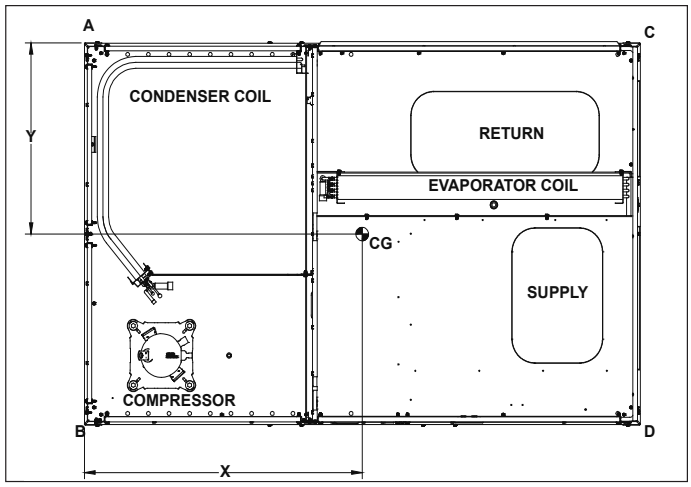

CORNER & CENTER-OF-GRAVITY LOCATIONS

Important: If using bottom discharge with roof curb, ductwork should be attached to the curb prior to installing the unit. Refer to the Roof Curb Installation Instructions for proper curb installation. Curbing must be installed in compliance with the National Roofing Contractors Association Manual. Lower unit carefully onto roof mounting curb. While rigging the unit, the center of gravity will cause the condenser end to be lower than the supply air end. Bring condenser end of unit into alignment with the curb. With condenser end of the unit resting on curb member and using curb as a fulcrum, lower opposite end of the unit until entire unit is seated on the curb. When a rectangular cantilever curb is used, take care to center the unit. Check for proper alignment and orientation of supply and return openings with duct.

Roof Curb Installation

The roof curb is field-assembled and must be installed level (within 1/16" per foot side to side). A sub-base must be constructed by the contractor in applications involving pitched roofs. Gaskets are furnished and must be installed between the unit and curb. For proper installation, follow NRCA guidelines. In applications requiring post and rail installation, an I-beam securely mounted on multiple posts should support the unit on each side. In addition, the insulation on the underside of the unit should be protected from the elements. Applications in geographic areas subjected to seismic or hurricane conditions must meet code requirements for fastening the unit to the curb and the curb to the building structure. For further and more detailed information please refer to our Daikin Light Commercial Packaged unit IOD.

Weights

Model	Shipping Weight (lbs)	Operating Weight (lbs)	Corner Weights (lbs)				Length	Width
			A	B	C	D	X (in)	Y (in)
DVH0903D	1365	1293	329	269	442	254	42.14	27.87
DVH1023D	1365	1293	329	269	442	254	42.14	27.87
DVH1203D	1365	1293	329	269	442	254	42.14	27.87

For details on accessories refer to document **PM-LC-ACCESSORIES**

Notes

Notes

Notes

Notes

Notes

Our continuing commitment to quality products may mean a change in specifications without notice.
©2026 DAIKIN COMFORT TECHNOLOGIES MANUFACTURING, INC. • Houston, Texas • Printed in the USA.