DSH Commercial

R-32 Standard Efficiency Heat Pump
Direct-Drive Packaged Rooftop Unit
7.5 - 10 Ton DSH Light Commercial

Up to 16 IEER / 11.4 EER

*Complete warranty details available from your local distributor or manufacturer's representative or at www.daikincomfort.com or www.daikinac.com

Supersedes 09/24

Our Perfect Package:

Harnessing energy-efficient performance, proven technology, and enhanced comfort for life.

Since becoming the first company in Japan to manufacture packaged air conditioning systems, in 1951, Daikin has supported comfortable indoor living based on the strengths and technologies that have led to the growth of the company becoming one of the world's largest manufacturers of HVAC products, systems and refrigerants.

Today, as a comprehensive global manufacturer of HVAC products and systems, the Daikin brand is committed to being recognized as a truly global and excellent company capable of continually creating new value for its customers. The company plans to pursue sustainable growth and foster business operations that consistently harmonize with the goals of improving indoor comfort.

The group philosophy of the company includes:

- Creating new value continuously for customers
- Developing world leading energy-saving technology
- Being a flexible and dynamic organization
- Allowing employees to be the driving force for the success of the company
- Fostering an atmosphere of best practices, boldness, and innovation
- Thinking and acting globally

Contents

2	Introduction	2
4	Nomenclature	4
5	Features and Benefits	5
	Applications	8
	Serviceability	8
9	Product Specifications	9
	AHRI Ratings	12
	Sound Data	12
	Coil Dimensions	12
13	Dimensional Data	13
14	Expanding Cooling Data	14
20	Electric Heater Data	20
21	Air Flow	21
33	Static Pressure	33
34	Heating Data	34
35	Electrical Data	35
42	Wiring Diagrams	42
43	Electrical Connections	43
	Unit Clearances	43
44	Installation	44
	Weights	44

For details on accessories refer to document **PM-LC-ACCESSORIES**

Nomenclature

D	S	H	120	3	S	400	C	A	A	X	X	X	X	X	X	X	X	A	*
1	2	3	4,5,6	7	8	9,10,11	12	13	14	15	16	17	18	19	20	21	22	23	24

Revision Levels
Major & Minor

Brand
D Daikin

Configuration
S R 32 Standard Efficiency
H R 32 High Efficiency

Application
C Cooling
G Gas Heat
H Heat Pump

Nominal Cooling Capacity

036	3 Tons	090	7½ Tons	240	20 Tons
048	4 Tons	102	8½ Tons	300	25 Tons
060	5 Tons	120	10 Tons		
072	6 Tons				

Voltage

1	208-230/1/60	4	460/3/60
3	208-230/3/60	7	575/3/60

Supply Fan/Drive Type/Motor
D Direct Drive - Standard Static
L Direct Drive - Medium Static
W Direct Drive - High Static

Nominal Heating Capacity

Gas/Electric
045 45,000 BTU/h
060 60,000 BTU/h
070 70,000 BTU/h
080 80,000 BTU/h
090 90,000 BTU/h
100 100,000 BTU/h
115 115,000 BTU/h
125 125,000 BTU/h
130 130,000 BTU/h
140 140,000 BTU/h
150 150,000 BTU/h
180 180,000 BTU/h
210 210,000 BTU/h
225 225,000 BTU/h
240 240,000 BTU/h
260 260,000 BTU/h
350 350,000 BTU/h
350 350,000 BTU/h
360 360,000 BTU/h
400 400,000 BTU/h
480 480,000 BTU/h

A/C H/P Factory-Installed Electric Heat

XXX	No Heat	XXX	No Heat
005	5kW	030	30 kW
010	10 kW	045	45kW
015	15 kW	060	60kW
020	20 kW	075	75kW

Electric Heat w/ SCR controls

S05	5kW	S22	20 kW
S10	10 kW	S25	25 kW
S15	15 kW	S30	30 kW
S16	15 kW	S31	30 kW
S18	18 kW	S45	45 kW
S20	20 kW	S46	45 kW
S21	20 kW	S60	60 kW
		S75	75kW

** See product specifications for heat size(s) available for each capacity.*

Refrigeration Systems
A Single stage cooling modes
C Two stage cooling modes
F Two stage cooling modes with Hot Gas Reheat and Low-ambient control
G Single stage cooling mode with Low-ambient controller
H Two stage cooling mode with Low-ambient controller

Heat Exchanger
X No options
A Standard Aluminized Exchanger
S Stainless Steel Exchanger
U Ultra Low NoX

Controls
A Electromechanical controls
B DDC w/ BACnet interface

Sensors
D R32 Sensor
E RA Smoke Detector
F SA Smoke Detector
G RA & SA Smoke Detector

Hail guard
X No Options
C Hail Guard

Economizer
X No Options
A Ultra Low-Leak Downflow Economizer w/ Enthalpy Sensor
C Ultra Low-Leak Internal Horizontal Economizer w/ Enthalpy Sensor
E Ultra Low-Leak Downflow Economizer for DDC controls w/ Enthalpy Sensor
F Ultra Low-Leak Horizontal Economizer for DDC controls w/ Enthalpy Sensor
G Ultra Low-Leak Downflow Economizer w/ Dry Bulb Sensor
J Ultra Low-Leak Internal Horizontal Economizer w/ Dry Bulb Sensor
L Ultra Low-Leak Downflow Economizer for DDC controls w/ Dry Bulb Sensor
M Ultra Low-Leak Horizontal Economizer for DDC controls w/ Dry Bulb Sensor

Electrical
X No Options
A Non-Fused Disconnect
B Phase Monitor
C Thru-the-base connections
E Non-Fused Disconnect and Phase Monitor
F Non-Fused Disconnect and Thru-the-base connections
H Phase Monitor and Thru-the-base connections
L Non-Fused Disconnect, Thru-the-base connections and Phase Monitor

Service Options
X No Option
A Powered convenience outlet
B Non-powered convenience outlet
C Hinge Panels
D Hinged Panels and Powered convenience outlet
E Hinged Panels and non-powered convenience outlet

IAQ
X No Options

PE Connection
X No Options
B Single-point power connection for Power Exhaust

X No Options

HP Stocking Models

New Daikin 7.5-10 Ton Direct-Drive

Model Number	Code String
DSH0903D000001S	DSH0903DXXXCXAXXXXXXXX
DSH0904D000001S	DSH0904DXXXCXAXXXXXXXX
DSH0907D000001S	DSH0907DXXXCXAXXXXXXXX
DSH1023D000001S	DSH1023DXXXCXAXXXXXXXX
DSH1024D000001S	DSH1024DXXXCXAXXXXXXXX
DSH1027D000001S	DSH1027DXXXCXAXXXXXXXX
DSH1203D000001S	DSH1203DXXXCXAXXXXXXXX
DSH1204D000001S	DSH1204DXXXCXAXXXXXXXX
DSH1207D000001S	DSH1207DXXXCXAXXXXXXXX

Daikin Packaged Rooftop Units (RTUs) are built to perform, with features and options that help provide low installation and operation costs, superior indoor air quality, efficient operation, and longevity.

Installation

Daikin Packaged units are designed with fast and easy installation in mind and are ideal for both new construction and retrofit projects. Our packaged rooftop units are built to be a direct replacement for most rooftop units on the field without the need of a curb adapter, to be able to replace the unit in a shorter time and at a lower cost .

Cabinet Construction

Daikin packaged rooftop units are made with high quality galvanized steel with a powder-paint finish to provide higher corrosion resistance.

» Easy accessibility using our tool-less filter access.

» Unit is fully insulated to prevent sweating and thermal losses, using our foil face fiberglass insulation which also omits exposed filter fibers into the airstream.

» 1" Raised flanged edges around the supply and return offer easy installation for the duct connections.

» The full perimeter base rail is built using heavy gauge galvanized steel for a stronger structural installation, the base rails are a minimum of 3 ½" tall and include holes to allow for overhead rigging and lifting with forklifts.

» Electrical lines and can be brought through the base of the unit or through the horizontal knockout for easy installation and accessibility on the field.

Compressor

High performance, low noise scroll compressors to match the required total load.

» Resiliently factory-mounted on rubber grommets for vibration isolation

» Refrigeration circuit includes both high and low pressure safety switches.

» Unit is factory charged with environmentally friendly low GWP R32 refrigerant.

» Two single stage scroll compressor individuality circuited for partial load applications.

» Compressor location outside the condenser section to avoid air bypass.

Supply Fan

The direct-drive with airfoil single width, single inlet (SWSI) Class II construction supply fan with aluminum fan + blades provides efficient and quiet operation at wide ranging static pressure and air flow requirments.

» Slide out forward curb fan for easy maintenance and replacement.

» Ball bearing Direct-Drive EEM motor removes the need for belts, sheaves, bearings and lubrication.

» High-static drive options for application with high airflow/ static requirements.

» Each fan assembly is dynamically trim balanced at the factory before shipment for quick start-up and efficient operation.

» Motor equipped with thermal overload to provide protection and lasting operation.

Coils

The indoor coil section is installed in a draw through configuration to provide better dehumidification.

These coils are constructed with seamless copper tubes, mechanically bonded into aluminum plate-type finds with full drawn collars to completely cover the tubes for high operating efficiencies.

» Microchannel heat exchanger technology on all condenser coils for improved performance and reduced refrigerant load.

» Coils are factory pressure tested to ensure pressure and leak integrity.

Controls and Wiring

Packaged rooftop units come equipped with a well-organized, large, easy to use weatherproof internal control box with easy access, for a better user experience.

» Units are factory-wired with color-coded wires and complete 24-volt Electromechanical controls package.

» Units include single-point power entry as standard and also available with electric heat kits if selected.

» Terminal strips are provided as standard for easy installation and low voltage power wiring.

Filtration

Unit provides a draw-through filter section as standard for better air quality and long lasting component maintenance.

» Filters installed on the units are standard off the shelf sizes for easy replacement.

» Tool-less filter access for easy and fast filter replacement and service.

Heating Section

Wide ranging of electric heat selections effectively handle most comfort heating demand from morning warm-up control to full heat.

Electric Heat

ETL approved electric heat is factory assembled, installed and tested.

» Heating control is fully integrated into the unit's control system for quick start-up and reliable control.

» Durable low watt density, nickel chromium elements provide longer life (compared to units without)..

» Fuses are provided in each branch circuit to a maximum of 48 Amps per NEC requirements.

» Single-point power connection reduces installation cost.

» For operational safeties electric heat includes automatic reset, and high temperature limit safety protection and an airflow safety switch to prevent electric heat operation in the event of no airflow.

Electrical

Units are completely wired and tested at the factory to provide faster commissioning and start-up.

» Wiring complies with NEC requirements and all applicable UL standards.

» Units are factory-wired with color-coded wires and complete 24-volt electromechanical controls package.

» A 115 V GFI convenience receptacle requiring independent power supply for the receptacle is optional.

» An optional unit powered 20 amp 115 V convenience receptacle, complete with factory mounted transformer, disconnect switch, and primary and secondary overload protection, eliminates the need to pull a separate 115 V power source.

» Unit includes knockouts in the bottom of the main control panels for field wiring entrance.

» A single-point power connection with power block is standard and a terminal strip is provided for connecting low voltage control wiring.

» For better serviceability an optional non-fused disconnect switch can be installed inside the control panel and operated by an externally mounted handle to disconnect the electrical power at the unit

DAIKIN

Applications

Daikin Rooftop units are intended for comfort cooling applications in normal heating, ventilating, and air conditioning. Consult your local Daikin sales representative for applications involving operations at high ambient temperatures, high altitudes, non-cataloged voltages, or for job-specific unit selections that fall outside of the range of the catalog tables.

For proper operation, units should be rigged in accordance with instructions stated on the installation manual. Fire dampers, if required, must be installed in the ductwork according to local and/or state codes. No space is allowed for these dampers in the unit.

Follow factory check, test and start procedures explicitly to achieve satisfactory start-up and operation.

Most rooftop applications take advantage of the significant energy savings provided with economizer operation. When an economizer system is used, mechanical refrigeration is typically not required below an ambient temperature of 50°F.

Serviceability

Daikin packaged rooftop units are built with serviceability in mind, designed to make future maintenance and service on the unit easy and accessible.

- Our packaged rooftop units offer a slide out blower to facilitate the access and removal of the fan.
- Filter panels offer tool-less access for easy maintenance.
- Independent compressor outside of the air bypass to eliminate component blockage and provide easy access.
- Label Field Connections are color-coded to identify point to point component connections.
- All 7.5-10 ton units are designed for convertible airflow orientation to serve downflow or horizontal applications. Every unit ships prepared to convert to horizontal orientation in the field if required.

Model	DSH0903D000001S	DSH0904D000001S	DSH0907D000001S
COOLING CAPACITY			
Total BTU/H	86,000	86,000	86,000
IEER / EER	16/11.4	16/11.4	16/11.4
AHRI Reference #	215440989	215440990	215440991
HEATING CAPACITY			
BTU/h (47° F) COP @47 / COP @ 17	86,000 3.4 / 2.25	86,000 3.4 / 2.25	86,000 3.4 / 2.25
EVAPORATOR MOTOR / RTPF (ROUND TUBE PLATE FIN)			
Motor Type	Direct Drive	Direct Drive	Direct Drive
External Static Pressure (ESP)	Standard	Standard	Standard
Wheel Dia. X Width	15x12	15x12	15x12
Indoor Nominal CFM	3000	3000	3000
RPM	300-1600	300-1600	300-1600
Indoor Horsepower	2.4	2.4	2.4
Filter Size (in)	20 X 25 X 2 (2) 25 X 25 X 2 (2)	20 X 25 X 2 (2) 25 X 25 X 2 (2)	20 X 25 X 2 (2) 25 X 25 X 2 (2)
Drain Size (NPT)	3/4	3/4	3/4
R-32 Refrigerant Charge (oz.)	143/143	143/143	143/143
Evaporator Coil Face Area (ft^2)	15	15	15
Rows Deep/ Fins per Inch	3 / 16	3 / 16	3 / 16
CONDENSER FAN / RTPF (ROUND TUBE PLATE FIN)			
Quantity of Condenser Fan Motors	2	2	2
RPM (High/Low stage)	1122	1050	1050
Outdoor Horsepower	1/3	1/3	1/3
Fan Diameter/ # Fan Blades	22 / 3	22 / 3	22 / 3
Face Area (ft^2)	31.0	31.0	31.0
Rows Deep / Fins per Inch	2/16	2/16	2/16
COMPRESSOR			
Quantity / Type / Stages Per Compression	2/ Scroll / 1	2/ Scroll / 1	2/ Scroll / 1
Compressor RLA / LRA	12.2/120	5.8/55.1	5.8/41
ELECTRICAL DATA			
Voltage-Phase-Frequency	208/230-3-60	460-3-60	575-3-60
Indoor Blower FLA	8	5.4	4.0
Max External Static (In. W.C.)	0.8	0.8	0.8
Outdoor Fan FLA (Per Fan)	2	0.85	0.67
Min. Circuit Ampacity[1]	39.4/39.4	20.1	18.3
Max. Overcurrent Protection (A)[2]	50/50	25	20
Power Supply Conduit Hole Dia. (in)	1.375	1.375	1.375
Low-Voltage Conduit Hole Dia. (in)	0.5	0.5	0.5
OPERATING WEIGHT (LBS.)			
Operating Weight (lbs)	1157	1157	1157
SHIPPING WEIGHT (LBS.)			
Ship Weight (lbs)	1229	1229	1229

[1] Wire size should be determined in accordance with National Electrical Codes. Extensive wire runs will require larger wire sizes.
[2] May use fuses or HACR-type circuit breakers of the same size as noted.
Note: Always check the S&R plate for electrical data on the unit being installed.

Model	DSH1023D000001S	DSH1024D000001S	DSH1027D000001S
COOLING CAPACITY			
Total BTU/H	98,000	98,000	98,000
IEER / EER	15.5/11.4	15.5/11.4	15.5/11.4
AHRI Reference #	215440992	215440993	215440994
HEATING CAPACITY			
BTU/h (47° F) COP @47 / COP @ 17	97,000 3.4 / 2.25	97,000 3.4 / 2.25	97,000 3.4 / 2.25
EVAPORATOR MOTOR / RTPF (ROUND TUBE PLATE FIN)			
Motor Type	Direct Drive	Direct Drive	Direct Drive
External Static Pressure (ESP)	Standard	Standard	Standard
Wheel Dia. X Width	15x12	15x12	15x12
Indoor Nominal CFM	3000	3000	3000
RPM	300-1600	300-1600	300-1600
Indoor Horsepower	2.4	2.4	2.4
Filter Size (in)	20 X 25 X 2 (2) 25 X 25 X 2 (2)	20 X 25 X 2 (2) 25 X 25 X 2 (2)	20 X 25 X 2 (2) 25 X 25 X 2 (2)
Drain Size (NPT)	3/4	3/4	3/4
R-32 Refrigerant Charge (oz.)	152/152	152/152	152/152
Evaporator Coil Face Area (ft^2)	15	15	15
Rows Deep/ Fins per Inch	3 / 16	3 / 16	3 / 16
CONDENSER FAN / RTPF (ROUND TUBE PLATE FIN)			
Quantity of Condenser Fan Motors	2	2	2
RPM (High/Low stage)	1122	1050	1050
Outdoor Horsepower	1/3	1/3	1/3
Fan Diameter/ # Fan Blades	22 / 3	22 / 3	22 / 3
Face Area (ft^2)	33.4	33.4	33.4
Rows Deep / Fins per Inch	2/16	2/16	2/16
COMPRESSOR			
Quantity / Type / Stages Per Compression	2/ Scroll / 1	2/ Scroll / 1	2/ Scroll / 1
Compressor RLA / LRA	14.1/120	6.4/55.1	5.1/41
ELECTRICAL DATA			
Voltage-Phase-Frequency	208/230-3-60	460-3-60	575-3-60
Indoor Blower FLA	8	5.4	4.0
Max External Static (In. W.C.)	0.8	0.8	0.8
Outdoor Fan FLA	2	0.85	0.67
Min. Circuit Ampacity[1]	43.7/43.7	21.5	16.9
Max. Overcurrent Protection (A)[2]	50/50	25	20
Power Supply Conduit Hole Dia. (in)	1.375	1.375	1.375
Low-Voltage Conduit Hole Dia. (in)	0.5	0.5	0.5
OPERATING WEIGHT (LBS.)			
Operating Weight (lbs)	1157	1157	1157
SHIPPING WEIGHT (LBS.)			
Ship Weight (lbs)	1229	1229	1229

[1] Wire size should be determined in accordance with National Electrical Codes. Extensive wire runs will require larger wire sizes.
[2] May use fuses or HACR-type circuit breakers of the same size as noted.
Note: Always check the S&R plate for electrical data on the unit being installed.

Model	DSH1203D000001S	DSH1204D000001S	DSH1207D000001S
COOLING CAPACITY			
Total BTU/H	116,000	116,000	116,000
IEER / EER	15.2/11.4	15.2/11.4	15.2/11.4
AHRI Reference #	215440995	215440996	215440997
HEATING CAPACITY			
BTU/h (47° F) COP @47 / COP @ 17	116,000 3.4 / 2.25	116,000 3.4 / 2.25	116,000 3.4 / 2.25
EVAPORATOR MOTOR / RTPF (ROUND TUBE PLATE FIN)			
Motor Type	Direct Drive	Direct Drive	Direct Drive
External Static Pressure (ESP)	Standard	Standard	Standard
Wheel Dia. X Width	15x15	15x15	15x15
Indoor Nominal CFM	3850	3850	3850
RPM	300-1600	300-1600	300-1600
Indoor Horsepower	3.5	3.5	3.5
Filter Size (in)	20 X 25 X 2 (2) 25 X 25 X 2 (2)	20 X 25 X 2 (2) 25 X 25 X 2 (2)	20 X 25 X 2 (2) 25 X 25 X 2 (2)
Drain Size (NPT)	3/4	3/4	3/4
R-32 Refrigerant Charge (oz.)	141/140	141/140	141/140
Evaporator Coil Face Area (ft^2)	15	15	15
Rows Deep/ Fins per Inch	3 / 16	3 / 16	3 / 16
CONDENSER FAN / RTPF (ROUND TUBE PLATE FIN)			
Quantity of Condenser Fan Motors	2	2	2
RPM (High/Low stage)	1122	1050	1050
Outdoor Horsepower	1/3	1/3	1/3
Fan Diameter/ # Fan Blades	22 / 3	22 / 3	22 / 3
Face Area (ft^2)	33.4	33.4	33.4
Rows Deep / Fins per Inch	2/16	2/16	2/16
COMPRESSOR			
Quantity / Type / Stages Per Compression	2/ Scroll / 1	2/ Scroll / 1	2/ Scroll / 1
Compressor RLA / LRA	17.3/155	7.7/58.1	7.0/47.8
ELECTRICAL DATA			
Voltage-Phase-Frequency	208/230-3-60	460-3-60	575-3-60
Indoor Blower FLA	10.9	7.2	5.0
Max External Static (In. W.C.)	0.8	0.8	0.8
Outdoor Fan FLA	2	0.85	0.67
Min. Circuit Ampacity[1]	55.2/55.2	27.3	22.8
Max. Overcurrent Protection (A)[2]	70/70	30	25
Power Supply Conduit Hole Dia. (in)	1.375	1.375	1.375
Low-Voltage Conduit Hole Dia. (in)	0.5	0.5	0.5
OPERATING WEIGHT (LBS.)			
Operating Weight (lbs)	1169	1169	1169
SHIPPING WEIGHT (LBS.)			
Ship Weight (lbs)	1241	1241	1241

[1] Wire size should be determined in accordance with National Electrical Codes. Extensive wire runs will require larger wire sizes.
[2] May use fuses or HACR-type circuit breakers of the same size as noted.
Note: Always check the S&R plate for electrical data on the unit being installed.

Sound Data

Static Pressure	7.5 Ton Sound (DB) at 60 Hz										
	Indoor CFM	Componet	A-Weighted	63	125	250	500	1000	2000	4000	8000
0.8	3,000	Discharge	76.6	95.9	78.9	68.0	74.3	69.7	67.0	66.6	60.0
		Inlet	67.4	91.6	76.3	65.2	61.6	59.0	53.2	52.6	46.8
1.4		Discharge	78.8	94.8	83.0	71.0	72.6	75.3	70.0	69.1	63.0
		Inlet	69.8	91.1	80.3	67.5	63.9	62.6	56.6	55.9	50.8
2.0		Discharge	82.8	99.9	91.3	76.7	77.0	77.6	74.5	72.2	66.9
		Inlet	72.9	93.3	84.7	71.8	66.5	64.6	59.6	58.8	54.1
N/A	N/A	Outdoor	86.8	95.4	85.3	86.8	83.3	81.7	79.8	72.2	66.9

Static Pressure	8.5 Ton Sound (DB) at 60 Hz										
	Indoor CFM	Componet	A-Weighted	63	125	250	500	1000	2000	4000	8000
0.8	3,400	Discharge	78.3	97.3	80.8	70.2	74.2	72.6	69.4	69.3	63.7
		Inlet	68.5	90.3	77.7	66.0	62.7	61.7	55.2	55.0	49.8
1.4		Discharge	80.0	94.5	83.4	71.8	73.7	76.2	71.5	71.0	65.9
		Inlet	69.6	89.9	78.1	68.2	64.7	63.9	57.5	57.4	52.7
2.0		Discharge	82.7	98.5	89.3	76.3	77.0	78.3	74.2	72.7	67.9
		Inlet	73.3	92.8	84.7	72.4	67.5	65.7	60.7	60.0	55.6
N/A	N/A	Outdoor	83.7	93.2	89.1	83.5	80.3	78.7	74.5	69.8	64.7

Static Pressure	10 Ton Sound (DB) at 60 Hz										
	Indoor CFM	Componet	A-Weighted	63	125	250	500	1000	2000	4000	8000
0.8	4,000	Discharge	75.8	91.2	83.6	73.3	71.6	70.1	66.8	64.9	58.6
		Inlet	69.6	85.5	79.8	73.2	64.2	60.8	54.7	52.8	46.6
1.4		Discharge	80.1	96.1	87.6	76.7	74.6	75.1	71.4	69.3	63.6
		Inlet	71.3	88.9	81.9	72.6	65.7	63.6	58.4	57.0	50.8
2.0		Discharge	81.6	98.1	89.4	80.8	76.2	75.9	73.3	70.8	65.0
		Inlet	73.9	91.2	84.6	76.8	67.2	65.6	60.7	59.7	53.9
N/A	N/A	Outdoor	86.8	95.4	85.3	86.8	83.3	81.7	79.8	72.2	66.9

[1] Outdoor sound data is measured in accordance with AHRI standard 270

[2] Discharge and Inlet sound data was measured in accordanced with AHRI standard 260.

[3] Measurements are expressed in terms of sound power. Do not compare these values to sound pressure values because sound pressure depends on specific environment factors which normally do not match individual applications. Sound power values are independent of the environment and therefore more accurate.

[4] A-weighted sound ratings filter out high and very low frequencies, to better approximate the response of "average" human ear. A-weighted measurements for Daikin units are taken in accordance with AHRI standards 260 and 270.

AHRI Ratings

MODEL	CAPACITY	EER	IEER	47 Capacity	47 COP	17 Capacity	17 COP
DSH0903D	86,000	11.4	16	86,000	3.4	50,000	2.25
DSH0904D	86,000	11.4	16	86,000	3.4	50,000	2.25
DSH0907D	86,000	11.4	16	86,000	3.4	50,000	2.25
DSH1023D	98,000	11.4	15.5	97,000	3.4	56,000	2.25
DSH1024D	98,000	11.4	15.5	97,000	3.4	56,000	2.25
DSH1027D	98,000	11.4	15.5	97,000	3.4	56,000	2.25
DSH1203D	116,000	11.4	15.2	116,000	3.4	66,000	2.25
DSH1204D	116,000	11.4	15.2	116,000	3.4	66,000	2.25
DSH1207D	116,000	11.4	15.2	116,000	3.4	66,000	2.25

Coil Dimensions

	Indoor			Outdoor		
Tons	Fin height in.	Fin length in.	Area (Ft^2)	Fin height in.	Fin length in.	Area (Ft^2)
7.5	41.6	51.8	15.0	48.5	46.1	31.1
8.5	41.6	51.8	15.0	48.5	49.5	33.3
10	41.6	51.8	15.0	48.5	49.5	33.3

Model Size	DIM "A"
DSH 090	6½
DSH 102	6½
DSH 120	6½

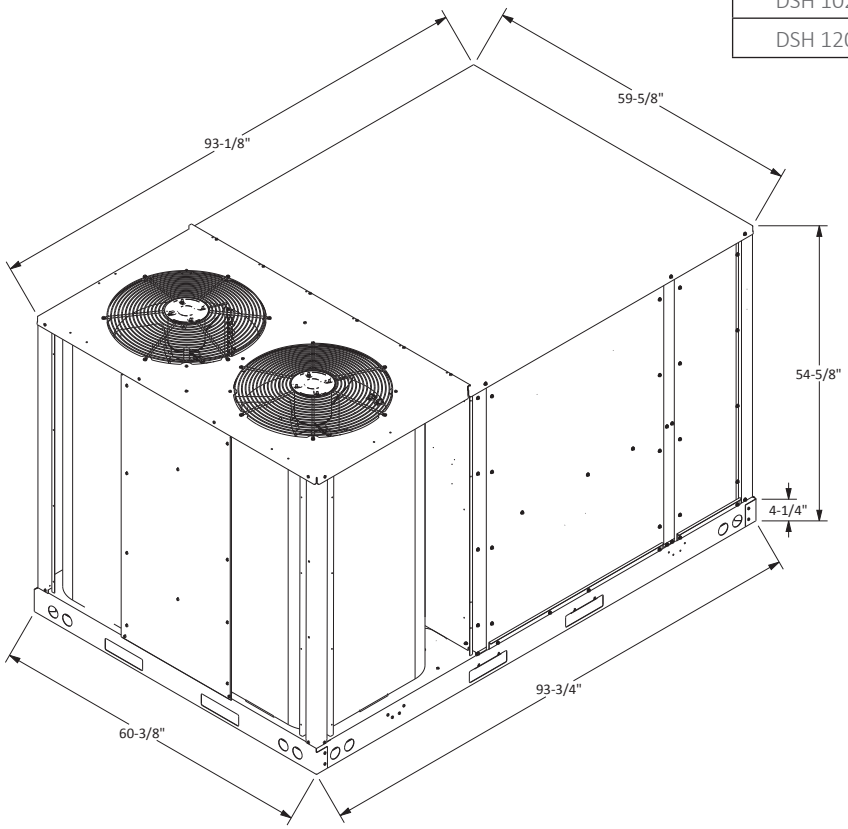

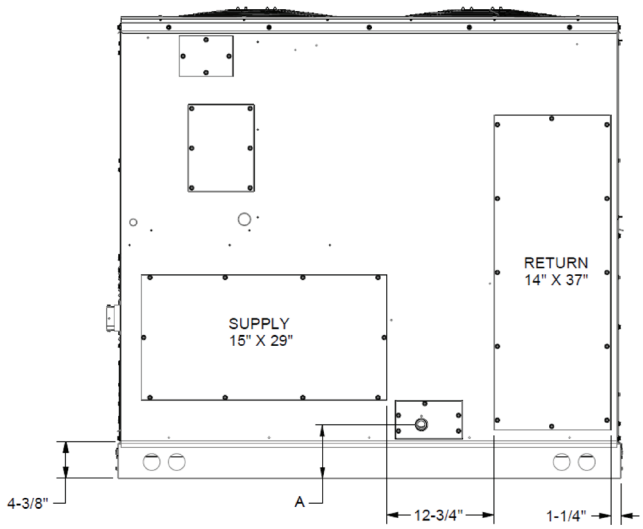

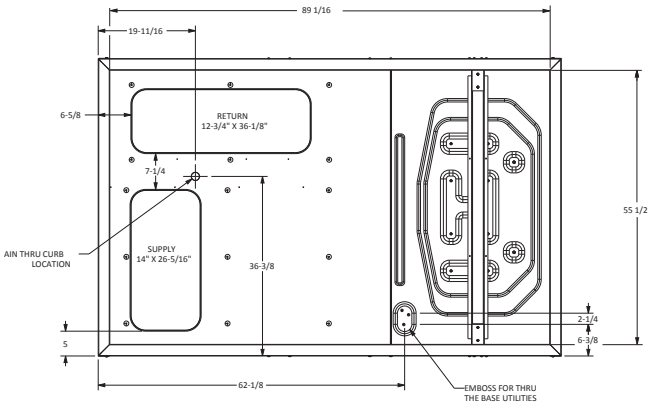

			Outdoor Ambient Temperature																							
			65				75				85				95				105				115			
			Entering Indoor Wet Bulb Temperature																							
IDB	Airflow	ID WB	59	63	67	71	59	63	67	71	59	63	67	71	59	63	67	71	59	63	67	71	59	63	67	71
70	2625	MBh	87.0	88.3	90.9	-	86.3	87.5	90.1	-	84.0	85.2	87.8	-	80.0	81.3	83.9	-	75.2	76.5	79.1	-	70.9	72.1	74.7	-
		S/T	0.62	0.56	0.44	-	0.63	0.56	0.44	-	0.65	0.59	0.46	-	0.68	0.60	0.47	-	0.71	0.63	0.49	-	0.80	0.72	0.57	-
		ΔT	18.82	17.08	13.83	-	18.77	17.03	13.78	-	19.02	17.28	14.03	-	18.75	17.01	13.76	-	18.52	16.78	13.53	-	19.61	17.87	14.62	-
		kW	5.47	5.47	5.45	-	6.11	6.10	6.09	-	6.82	6.81	6.80	-	7.58	7.58	7.57	-	8.44	8.44	8.43	-	9.45	9.45	9.43	-
		Amps	21.41	21.39	21.34	-	24.32	24.30	24.25	-	27.57	27.55	27.50	-	31.08	31.06	31.01	-	35.01	34.99	34.94	-	39.62	39.60	39.55	-
		Hi PR	259	260	262	-	300	301	303	-	343	344	346	-	389	390	392	-	439	440	442	-	492	493	495	-
		Lo PR	131	133	136	-	139	141	144	-	145	148	151	-	152	150	157	-	158	160	160	-	165	167	170	-
	3000	MBh	88.6	89.9	92.5	-	87.9	89.1	91.7	-	85.6	86.8	89.4	-	81.6	82.9	85.5	-	76.8	78.1	80.7	-	72.5	73.7	76.3	-
		S/T	0.66	0.59	0.46	-	0.67	0.59	0.46	-	0.69	0.62	0.48	-	0.72	0.64	0.49	-	0.75	0.66	0.51	-	0.85	0.75	0.59	-
		ΔT	17.77	16.03	12.78	-	17.72	15.98	12.73	-	17.96	16.22	12.97	-	17.70	15.96	12.71	-	17.47	15.73	12.48	-	18.56	16.82	13.57	-
		kW	5.50	5.50	5.49	-	6.14	6.13	6.12	-	6.85	6.84	6.83	-	7.62	7.61	7.60	-	8.48	8.47	8.46	-	9.48	9.48	9.47	-
		Amps	21.56	21.54	21.49	-	24.47	24.45	24.40	-	27.72	27.70	27.65	-	31.24	31.21	31.16	-	35.16	35.14	35.09	-	39.77	39.75	39.70	-
		Hi PR	261	263	264	-	302	304	305	-	345	346	348	-	391	393	394	-	441	442	444	-	494	495	497	-
		Lo PR	133	135	138	-	141	143	146	-	148	150	153	-	154	153	159	-	160	162	164	-	167	169	172	-
	3375	MBh	90.0	91.3	93.9	-	89.2	90.5	93.1	-	87.0	88.2	90.8	-	83.0	84.3	86.9	-	78.2	79.5	82.1	-	73.8	75.1	77.7	-
		S/T	0.70	0.62	0.47	-	0.70	0.62	0.47	-	0.73	0.65	0.49	-	0.75	0.66	0.51	-	0.79	0.69	0.52	-	0.89	0.79	0.61	-
		ΔT	16.88	15.14	11.89	-	16.83	15.09	11.84	-	17.08	15.34	12.09	-	16.82	15.08	11.83	-	16.58	14.84	11.59	-	17.67	15.93	12.68	-
		kW	5.53	5.53	5.52	-	6.17	6.16	6.15	-	6.88	6.87	6.86	-	7.65	7.64	7.63	-	8.50	8.50	8.49	-	9.51	9.51	9.50	-
		Amps	21.69	21.66	21.61	-	24.60	24.57	24.52	-	27.85	27.82	27.77	-	31.36	31.34	31.29	-	35.29	35.27	35.22	-	39.90	39.88	39.83	-
		Hi PR	264	265	267	-	305	306	307	-	347	349	350	-	394	395	397	-	443	444	446	-	496	498	499	-
		Lo PR	135	137	140	-	143	145	148	-	150	152	155	-	150	155	161	-	162	164	166	-	169	171	174	-
75	2625	MBh	87.5	88.8	91.4	95.4	86.8	88.0	90.6	94.6	84.5	85.7	88.3	92.3	80.5	81.8	84.4	88.4	75.7	77.0	79.6	83.6	71.4	72.6	75.2	79.2
		S/T	0.75	0.68	0.56	0.4	0.75	0.68	0.56	0.4	0.78	0.71	0.58	0.5	0.81	0.74	0.60	0.5	0.85	0.77	0.63	0.5	0.95	0.86	0.71	0.5
		ΔT	22.65	20.90	17.66	14.3	22.60	20.86	17.61	14.2	22.84	21.10	17.85	14.5	22.58	20.84	17.59	14.2	22.35	20.61	17.36	14.0	23.44	21.70	18.45	15.1
		kW	5.47	5.46	5.45	5.5	6.10	6.10	6.09	6.1	6.81	6.81	6.80	6.8	7.58	7.58	7.56	7.6	8.44	8.43	8.42	8.5	9.45	9.44	9.43	9.5
		Amps	21.39	21.37	21.32	21.5	24.30	24.28	24.23	24.4	27.55	27.53	27.48	27.7	31.07	31.04	30.99	31.2	34.99	34.97	34.92	35.1	39.60	39.58	39.53	39.8
		Hi PR	260	261	262	267.0	300	302	303	307.9	343	344	346	350.8	389	391	392	396.9	439	440	442	446.7	492	493	495	499.8
		Lo PR	131	133	136	141.9	139	141	144	149.8	138	148	151	156.8	139	154	157	162.7	158	160	163	168.6	165	167	170	170.6
	3000	MBh	88.7	89.9	92.5	96.5	87.9	89.1	91.8	95.8	85.6	86.9	89.5	93.5	81.7	82.9	85.5	89.5	76.9	78.1	80.7	84.7	72.5	73.7	76.4	80.3
		S/T	0.80	0.73	0.59	0.5	0.81	0.73	0.60	0.5	0.84	0.76	0.62	0.5	0.87	0.79	0.64	0.5	0.91	0.83	0.67	0.5	1.00	0.92	0.75	0.6
		ΔT	21.59	19.85	16.60	13.2	21.55	19.81	16.56	13.2	21.79	20.05	16.80	13.4	21.53	19.79	16.54	13.2	21.30	19.56	16.31	12.9	21.97	20.65	17.40	14.0
		kW	5.50	5.49	5.48	5.5	6.14	6.13	6.12	6.2	6.85	6.84	6.83	6.9	7.61	7.61	7.60	7.6	8.47	8.47	8.46	8.5	9.48	9.47	9.46	9.5
		Amps	21.54	21.52	21.47	21.7	24.45	24.43	24.38	24.6	27.70	27.68	27.63	27.9	31.22	31.19	31.14	31.4	35.15	35.12	35.07	35.3	39.75	39.73	39.68	39.9
		Hi PR	262	263	265	269.2	303	304	306	310.1	345	347	348	353.0	392	393	395	399.1	441	443	444	448.9	495	496	497	502.0
		Lo PR	133	135	138	143.8	139	143	146	151.8	139	150	153	158.8	139	156	159	164.7	160	158	165	170.5	151	169	172	173.9
	3375	MBh	90.1	91.3	93.9	97.9	89.3	90.5	93.1	97.1	87.0	88.2	90.9	94.8	83.1	84.3	86.9	90.9	78.3	79.5	82.1	86.1	73.9	75.1	77.7	81.7
		S/T	0.85	0.77	0.62	0.5	0.86	0.78	0.62	0.5	0.89	0.81	0.65	0.5	0.92	0.83	0.67	0.5	0.97	0.87	0.70	0.5	1.00	0.98	0.79	0.6
		ΔT	20.71	18.97	15.72	12.4	20.66	18.92	15.67	12.3	20.91	19.17	15.92	12.5	20.64	18.90	15.65	12.3	20.41	18.67	15.42	12.1	19.90	19.76	16.51	13.1
		kW	5.53	5.52	5.51	5.6	6.16	6.16	6.15	6.2	6.87	6.87	6.86	6.9	7.64	7.64	7.63	7.7	8.50	8.49	8.48	8.5	9.51	9.50	9.49	9.5
		Amps	21.67	21.64	21.59	21.8	24.58	24.55	24.50	24.7	27.83	27.80	27.75	28.0	31.34	31.32	31.27	31.5	35.27	35.25	35.20	35.4	39.88	39.86	39.81	40.0
		Hi PR	264	265	267	271.3	305	306	308	312.2	348	349	351	355.1	394	395	397	401.3	444	445	446	451.0	497	498	500	504.1
		Lo PR	135	137	140	145.9	139	145	148	153.9	139	152	155	160.9	139	158	161	166.8	162	160	167	172.6	169	171	174	176.0

IDB: Entering Indoor Dry Bulb Temperature Shaded area reflects ACCA (TVA) conditions **kW = Total system power**

High and low pressures are measured at the liquid and suction access fittings. **Amps: Unit amps (comp.+ evaporator + condenser fan motors)**

Design Subcooling, 16 - 19 °F @ the liquid access fitting connection ARI 95 test conditions. Design Superheat 8 - 12°F @ the compressor suction access fitting connection.

			Outdoor Ambient Temperature																							
			65				75				85				95				105				115			
			Entering Indoor Wet Bulb Temperature																							
IDB	Airflow	ID WB	59	63	67	71	59	63	67	71	59	63	67	71	59	63	67	71	59	63	67	71	59	63	67	71
80	2625	MBh	88.0	89.2	91.8	95.8	87.2	88.5	91.1	95.1	84.9	86.2	88.8	92.8	81.0	82.2	84.9	88.8	76.2	77.4	80.0	84.0	71.8	73.0	75.7	79.7
		S/T	0.87	0.80	0.68	0.5	0.88	0.81	0.68	0.5	0.91	0.84	0.71	0.6	0.94	0.87	0.73	0.6	0.99	0.91	0.77	0.6	1.00	1.00	0.85	0.7
		ΔT	26.50	24.76	21.51	18.1	26.45	24.71	21.46	18.1	26.70	24.95	21.71	18.3	26.43	24.69	21.44	18.1	26.20	24.46	21.21	17.8	24.87	25.30	22.30	18.9
		kW	5.47	5.46	5.45	5.5	6.11	6.10	6.09	6.1	6.82	6.81	6.80	6.8	7.58	7.58	7.57	7.6	8.44	8.44	8.43	8.5	9.45	9.44	9.43	9.5
		Amps	21.40	21.38	21.33	21.6	24.32	24.29	24.24	24.5	27.56	27.54	27.49	27.7	31.08	31.06	31.01	31.2	35.01	34.99	34.94	35.2	39.62	39.60	39.55	39.8
		Hi PR	260	261	263	267.5	301	302	304	308.4	344	345	347	351.2	390	391	393	397.4	440	441	443	447.2	493	494	496	500.3
		Lo PR	128	134	137	142.4	128	141	145	150.4	127	148	152	157.4	153	152	158	163.3	159	152	164	169.1	166	156	171	173.8
	3000	MBh	89.1	90.4	93.0	97.0	88.4	89.6	92.2	96.2	86.1	87.3	89.9	93.9	82.1	83.4	**86.0**	90.0	77.3	78.6	81.2	85.2	73.0	74.2	76.8	80.8
		S/T	0.94	0.87	0.73	0.6	0.95	0.87	0.73	0.6	0.98	0.90	0.76	0.6	1.00	0.94	**0.78**	0.6	1.00	0.98	0.82	0.7	1.00	1.00	0.91	0.7
		ΔT	25.45	23.71	20.46	17.1	25.40	23.66	20.41	17.0	25.64	23.90	20.65	17.3	24.89	23.64	**20.39**	17.0	23.44	23.41	20.16	16.8	22.11	22.48	21.25	17.9
		kW	5.50	5.50	5.49	5.5	6.14	6.13	6.12	6.2	6.85	6.84	6.83	6.9	7.62	7.61	**7.60**	7.6	8.48	8.47	8.46	8.5	9.48	9.48	9.47	9.5
		Amps	21.56	21.53	21.48	21.7	24.47	24.44	24.39	24.6	27.72	27.69	27.64	27.9	31.23	31.21	**31.16**	31.4	35.16	35.14	35.09	35.3	39.77	39.75	39.70	39.9
		Hi PR	262	263	265	269.7	303	304	306	310.6	346	347	349	353.4	392	393	**395**	399.6	442	443	445	449.4	495	496	498	502.5
		Lo PR	127	135	139	144.4	127	143	147	152.4	149	150	154	159.3	156	152	**160**	165.3	161	152	165	171.1	168	164	173	177.0
	3375	MBh	90.5	91.8	94.4	98.4	89.7	91.0	93.6	97.6	87.5	88.7	91.3	95.3	83.5	84.8	87.4	91.4	78.7	80.0	82.6	86.6	74.3	75.6	78.2	82.2
		S/T	1.00	0.92	0.77	0.6	1.00	0.93	0.77	0.6	1.00	0.96	0.80	0.6	1.00	1.00	0.83	0.7	1.00	1.00	0.87	0.7	1.00	1.00	0.97	0.8
		ΔT	24.38	22.82	19.57	16.2	24.17	22.77	19.52	16.2	23.56	23.02	19.77	16.4	22.50	22.76	19.51	16.1	21.21	21.54	19.27	15.9	20.02	20.36	20.36	17.0
		kW	5.53	5.53	5.51	5.6	6.17	6.16	6.15	6.2	6.88	6.87	6.86	6.9	7.64	7.64	7.63	7.7	8.50	8.50	8.49	8.5	9.51	9.51	9.49	9.5
		Amps	21.68	21.66	21.61	21.8	24.59	24.57	24.52	24.7	27.84	27.82	27.77	28.0	31.36	31.34	31.29	31.5	35.29	35.26	35.21	35.4	39.90	39.87	39.82	40.0
		Hi PR	264	265	267	271.8	305	306	308	312.7	348	349	351	355.6	394	395	397	401.7	444	445	447	451.5	497	498	500	504.6
		Lo PR	136	138	141	146.5	144	146	149	154.5	151	153	156	161.5	157	152	162	167.4	163	164	168	173.2	170	170	170	179.2
85	2625	MBh	89.5	90.7	93.3	97.3	88.7	89.9	92.5	96.5	86.4	87.6	90.3	94.2	82.5	83.7	86.3	90.3	77.7	78.9	81.5	85.5	73.3	74.5	77.1	81.1
		S/T	0.97	0.90	0.77	0.6	0.97	0.90	0.78	0.6	1.00	0.93	0.80	0.7	1.00	0.97	0.83	0.7	1.00	1.00	0.87	0.7	1.00	1.00	0.96	0.8
		ΔT	29.91	28.17	24.92	21.6	29.87	28.13	24.88	21.5	29.92	28.37	25.12	21.8	28.56	28.11	24.86	21.5	26.90	27.33	24.63	21.3	25.38	25.81	25.72	22.4
		kW	5.48	5.48	5.47	5.5	6.12	6.11	6.10	6.2	6.83	6.82	6.81	6.9	7.60	7.59	7.58	7.6	8.45	8.45	8.44	8.5	9.46	9.46	9.45	9.5
		Amps	21.46	21.44	21.39	21.6	24.37	24.35	24.30	24.5	27.62	27.60	27.55	27.8	31.14	31.11	31.06	31.3	35.07	35.04	34.99	35.2	39.67	39.65	39.60	39.8
		Hi PR	261	262	264	268.7	302	303	305	309.6	345	346	348	352.5	391	392	394	398.6	441	442	444	448.4	494	495	497	501.5
		Lo PR	134	135	139	144.4	142	142	147	152.4	150	141	154	159.4	155	142	160	165.3	161	162	166	171.1	168	169	173	178.4
	3000	MBh	90.6	91.9	94.5	98.5	89.8	91.1	93.7	97.7	87.6	88.8	91.4	95.4	83.6	84.9	87.5	91.5	78.8	80.1	82.7	86.7	74.4	75.7	78.3	82.3
		S/T	1.00	0.97	0.83	0.7	1.00	0.98	0.84	0.7	1.00	1.00	0.87	0.7	1.00	1.00	0.90	0.7	1.00	1.00	0.94	0.8	1.00	1.00	1.00	0.9
		ΔT	27.46	27.12	23.87	20.5	27.22	27.08	23.83	20.5	26.53	26.91	24.07	20.7	25.34	25.72	23.81	20.4	23.88	24.26	23.58	20.2	22.56	22.93	23.72	21.3
		kW	5.52	5.51	5.50	5.5	6.15	6.15	6.14	6.2	6.86	6.86	6.85	6.9	7.63	7.62	7.61	7.7	8.49	8.48	8.47	8.5	9.49	9.49	9.48	9.5
		Amps	21.61	21.59	21.54	21.8	24.52	24.50	24.45	24.7	27.77	27.75	27.70	27.9	31.29	31.26	31.21	31.4	35.22	35.19	35.14	35.4	39.83	39.80	39.75	40.0
		Hi PR	263	265	266	270.9	304	305	307	311.8	347	348	350	354.7	393	394	396	400.8	443	444	446	450.6	496	497	499	503.7
		Lo PR	137	137	141	146.3	144	141	149	154.3	151	152	156	161.3	157	158	162	167.2	162	164	166	173.0	170	171	175	180.3
	3375	MBh	92.0	93.2	95.9	99.8	91.2	92.5	95.1	99.1	88.9	90.2	92.8	96.8	85.0	86.2	88.9	92.8	80.2	81.4	84.1	88.0	75.8	77.1	79.7	83.7
		S/T	1.00	1.00	0.89	0.7	1.00	1.00	0.90	0.7	1.00	1.00	0.93	0.8	1.00	1.00	0.96	0.8	1.00	1.00	1.00	0.8	1.00	1.00	1.00	0.9
		ΔT	24.78	25.11	22.99	19.6	24.57	24.90	22.94	19.6	23.96	24.29	23.19	19.8	22.90	23.23	22.92	19.6	21.60	21.94	22.64	19.3	20.42	20.75	21.46	20.4
		kW	5.54	5.54	5.53	5.6	6.18	6.17	6.16	6.2	6.89	6.88	6.87	6.9	7.66	7.65	7.64	7.7	8.52	8.51	8.50	8.5	9.52	9.52	9.51	9.6
		Amps	21.74	21.71	21.66	21.9	24.65	24.63	24.58	24.8	27.90	27.87	27.83	28.0	31.41	31.39	31.34	31.6	35.34	35.32	35.27	35.5	39.95	39.93	39.88	40.1
		Hi PR	266	267	268	273.0	306	308	309	313.9	349	350	352	356.8	395	397	398	402.9	445	446	448	452.7	498	499	501	505.8
		Lo PR	138	140	143	148.5	146	148	151	156.5	153	155	158	163.5	159	160	164	169.4	165	166	170	175.2	172	174	178	182.4

IDB: Entering Indoor Dry Bulb Temperature

Shaded area reflects ACCA (TVA) conditions

kW = Total system power

High and low pressures are measured at the liquid and suction access fittings.

Amps: Unit amps (comp.+ evaporator + condenser fan motors)

Design Subcooling, 16 - 19 °F @ the liquid access fitting connection ARI 95 test conditions. Design Superheat 8 - 12°F @ the compressor suction access fitting connection.

			Outdoor Ambient Temperature																							
			65				75				85				95				105				115			
			Entering Indoor Wet Bulb Temperature																							
IDB	Airflow	ID WB	59	63	67	71	59	63	67	71	59	63	67	71	59	63	67	71	59	63	67	71	59	63	67	71
70	2625	MBh	99.3	100.7	103.6	-	98.4	99.8	102.8	-	95.8	97.2	100.2	-	91.3	92.7	95.7	-	85.8	87.2	90.2	-	80.8	82.2	85.2	-
		S/T	0.61	0.55	0.43	-	0.62	0.55	0.43	-	0.64	0.57	0.45	-	0.66	0.59	0.46	-	0.70	0.62	0.48	-	0.78	0.70	0.55	-
		ΔT	21.03	19.09	15.46	-	20.98	19.04	15.40	-	21.25	19.31	15.68	-	20.96	19.02	15.38	-	20.70	18.76	15.12	-	21.92	19.97	16.34	-
		kW	6.20	6.20	6.19	-	6.94	6.93	6.92	-	7.76	7.75	7.74	-	8.64	8.64	8.63	-	9.63	9.63	9.62	-	10.80	10.79	10.78	-
		Amps	24.96	24.93	24.87	-	28.31	28.29	28.23	-	32.06	32.04	31.98	-	36.12	36.10	36.04	-	40.66	40.63	40.57	-	45.97	45.95	45.89	-
		Hi PR	264	265	267	-	305	306	308	-	349	350	352	-	396	397	399	-	446	448	449	-	500	502	503	-
		Lo PR	131	132	136	-	139	140	144	-	139	145	151	-	151	145	155	-	157	159	156	-	165	166	169	-
	3000	MBh	100.6	102.0	105.0	-	99.7	101.1	104.1	-	97.1	98.5	101.5	-	92.6	94.0	97.0	-	87.1	88.5	91.5	-	82.1	83.5	86.5	-
		S/T	0.65	0.58	0.45	-	0.66	0.58	0.45	-	0.68	0.61	0.47	-	0.71	0.63	0.48	-	0.74	0.66	0.50	-	0.83	0.74	0.58	-
		ΔT	19.86	17.91	14.28	-	19.81	17.86	14.23	-	20.08	18.13	14.50	-	19.79	17.84	14.21	-	19.53	17.58	13.95	-	20.74	18.80	15.17	-
		kW	6.24	6.24	6.22	-	6.98	6.97	6.96	-	7.80	7.79	7.78	-	8.68	8.68	8.66	-	9.67	9.67	9.65	-	10.83	10.83	10.82	-
		Amps	25.13	25.10	25.05	-	28.49	28.46	28.41	-	32.24	32.21	32.15	-	36.30	36.27	36.21	-	40.83	40.80	40.75	-	46.15	46.12	46.07	-
		Hi PR	266	267	269	-	308	309	311	-	351	352	354	-	398	399	401	-	449	450	452	-	503	504	506	-
		Lo PR	133	134	138	-	141	142	146	-	142	148	152	-	153	149	158	-	159	161	159	-	166	168	171	-
	3375	MBh	102.1	103.6	106.5	-	101.3	102.7	105.6	-	98.6	100.1	103.0	-	94.2	95.6	98.6	-	88.7	90.1	93.1	-	83.7	85.1	88.1	-
		S/T	0.69	0.61	0.46	-	0.69	0.61	0.47	-	0.72	0.64	0.49	-	0.74	0.65	0.50	-	0.78	0.68	0.52	-	0.88	0.78	0.60	-
		ΔT	18.87	16.92	13.29	-	18.82	16.87	13.24	-	19.09	17.14	13.51	-	18.80	16.85	13.22	-	18.54	16.59	12.96	-	19.75	17.81	14.18	-
		kW	6.27	6.27	6.26	-	7.01	7.00	6.99	-	7.83	7.82	7.81	-	8.71	8.71	8.70	-	9.70	9.70	9.69	-	10.87	10.86	10.85	-
		Amps	25.28	25.25	25.19	-	28.64	28.61	28.55	-	32.38	32.36	32.30	-	36.44	36.42	36.36	-	40.98	40.95	40.89	-	46.30	46.27	46.21	-
		Hi PR	268	269	271	-	310	311	313	-	353	354	356	-	400	401	403	-	451	452	454	-	505	506	508	-
		Lo PR	135	136	140	-	143	144	148	-	144	150	155	-	145	151	160	-	161	163	162	-	169	170	173	-
75	2625	MBh	99.8	101.2	104.1	108.7	98.9	100.3	103.3	107.8	96.3	97.7	100.7	105.2	91.8	93.2	96.2	100.7	86.3	87.7	90.7	95.2	81.3	82.7	85.7	90.3
		S/T	0.73	0.67	0.55	0.4	0.74	0.67	0.55	0.4	0.77	0.70	0.57	0.4	0.79	0.72	0.59	0.5	0.84	0.76	0.62	0.5	0.93	0.85	0.69	0.5
		ΔT	25.31	23.37	19.73	16.0	25.26	23.31	19.68	15.9	25.53	23.59	19.95	16.2	25.24	23.29	19.66	15.9	24.98	23.03	19.40	15.6	26.20	24.25	20.62	16.9
		kW	6.20	6.19	6.18	6.2	6.93	6.93	6.91	7.0	7.75	7.75	7.73	7.8	8.64	8.63	8.62	8.7	9.63	9.62	9.61	9.7	10.79	10.79	10.77	10.8
		Amps	24.93	24.91	24.85	25.1	28.29	28.27	28.21	28.5	32.04	32.02	31.96	32.2	36.10	36.07	36.02	36.3	40.63	40.61	40.55	40.8	45.95	45.93	45.87	46.1
		Hi PR	264	265	267	271.5	306	307	309	313.2	349	350	352	356.7	396	397	399	403.7	447	448	450	454.3	501	502	504	508.3
		Lo PR	131	132	136	141.2	139	140	144	149.2	139	146	151	156.1	139	147	156	162.0	157	159	158	167.8	165	166	169	164.6
	3000	MBh	101.1	102.5	105.5	110.0	100.2	101.6	104.6	109.1	97.6	99.0	102.0	106.5	93.1	94.5	97.5	102.0	87.6	89.0	92.0	96.6	82.6	84.0	87.0	91.6
		S/T	0.79	0.71	0.58	0.4	0.79	0.72	0.58	0.4	0.82	0.75	0.61	0.5	0.85	0.77	0.63	0.5	0.90	0.81	0.65	0.5	1.00	0.91	0.74	0.6
		ΔT	24.14	22.19	18.56	14.8	24.08	22.14	18.51	14.7	24.36	22.41	18.78	15.0	24.06	22.12	18.49	14.7	23.80	21.86	18.23	14.5	25.02	23.08	19.44	15.7
		kW	6.24	6.23	6.22	6.3	6.97	6.97	6.95	7.0	7.79	7.78	7.77	7.8	8.68	8.67	8.66	8.7	9.67	9.66	9.65	9.7	10.83	10.82	10.81	10.9
		Amps	25.11	25.08	25.02	25.3	28.47	28.44	28.38	28.6	32.22	32.19	32.13	32.4	36.27	36.25	36.19	36.4	40.81	40.78	40.72	41.0	46.13	46.10	46.04	46.3
		Hi PR	266	267	269	273.8	308	309	311	315.4	351	353	354	359.0	398	399	401	405.9	449	450	452	456.5	503	504	506	510.6
		Lo PR	133	134	138	143.1	139	142	146	151.1	140	149	152	158.1	139	150	158	163.9	159	150	162	169.7	166	168	171	167.9
	3375	MBh	102.6	104.1	107.0	111.6	101.8	103.2	106.1	110.7	99.1	100.6	103.5	108.1	94.7	96.1	99.1	103.6	89.2	90.6	93.6	98.1	84.2	85.6	88.6	93.1
		S/T	0.84	0.76	0.61	0.5	0.84	0.76	0.61	0.5	0.87	0.79	0.64	0.5	0.90	0.82	0.66	0.5	0.95	0.86	0.68	0.5	1.00	0.96	0.77	0.6
		ΔT	23.15	21.20	17.57	13.8	23.09	21.15	17.52	13.8	23.37	21.42	17.79	14.0	23.07	21.13	17.50	13.7	22.81	20.87	17.24	13.5	22.68	22.09	18.45	14.7
		kW	6.27	6.26	6.25	6.3	7.00	7.00	6.98	7.0	7.82	7.82	7.80	7.9	8.71	8.70	8.69	8.7	9.70	9.69	9.68	9.7	10.86	10.86	10.84	10.9
		Amps	25.25	25.23	25.17	25.4	28.61	28.59	28.53	28.8	32.36	32.34	32.28	32.5	36.42	36.39	36.34	36.6	40.95	40.93	40.87	41.1	46.27	46.25	46.19	46.4
		Hi PR	268	270	271	276.0	310	311	313	317.6	354	355	357	361.2	401	402	404	408.1	451	452	454	458.7	505	506	508	512.7
		Lo PR	135	136	140	145.3	139	144	148	153.2	139	151	155	160.2	139	153	161	166.1	161	154	164	171.9	169	170	174	171.3

IDB: Entering Indoor Dry Bulb Temperature Shaded area reflects ACCA (TVA) conditions **kW = Total system power**

High and low pressures are measured at the liquid and suction access fittings. **Amps: Unit amps (comp.+ evaporator + condenser fan motors)**

Design Subcooling, 16 - 19 °F @ the liquid access fitting connection ARI 95 test conditions. Design Superheat 8 - 12°F @ the compressor suction access fitting connection.

			Outdoor Ambient Temperature																							
			65				75				85				95				105				115			
			Entering Indoor Wet Bulb Temperature																							
IDB	Airflow	ID WB	59	63	67	71	59	63	67	71	59	63	67	71	59	63	67	71	59	63	67	71	59	63	67	71
80	2625	MBh	100.3	101.7	104.7	109.2	99.4	100.8	103.8	108.3	96.8	98.2	101.2	105.7	92.3	93.7	96.7	101.2	86.8	88.2	91.2	95.8	81.8	83.2	86.2	90.8
		S/T	0.85	0.79	0.66	0.5	0.86	0.79	0.67	0.5	0.89	0.82	0.69	0.6	0.92	0.85	0.72	0.6	0.97	0.89	0.75	0.6	1.00	0.99	0.83	0.7
		ΔT	29.62	27.67	24.04	20.3	29.56	27.62	23.99	20.2	29.84	27.89	24.26	20.5	29.54	27.60	23.97	20.2	29.28	27.34	23.71	19.9	28.34	28.56	24.93	21.2
		kW	6.20	6.20	6.18	6.2	6.94	6.93	6.92	7.0	7.76	7.75	7.74	7.8	8.64	8.64	8.62	8.7	9.63	9.63	9.62	9.7	10.80	10.79	10.78	10.8
		Amps	24.95	24.93	24.87	25.1	28.31	28.28	28.23	28.5	32.06	32.03	31.98	32.2	36.12	36.09	36.03	36.3	40.65	40.63	40.57	40.8	45.97	45.94	45.89	46.1
		Hi PR	264	266	267	272.0	306	307	309	313.6	350	351	353	357.2	397	398	400	404.2	447	448	450	454.8	501	502	504	508.8
		Lo PR	127	133	136	141.8	128	141	144	149.8	128	148	151	156.7	152	149	157	162.6	158	149	160	168.4	165	167	170	166.5
	3000	MBh	101.6	103.0	106.0	110.5	100.7	102.1	105.1	109.6	98.1	99.5	102.5	107.0	93.6	95.0	**98.0**	102.5	88.1	89.5	92.5	97.1	83.1	84.5	87.5	92.1
		S/T	0.92	0.85	0.71	0.6	0.93	0.85	0.72	0.6	0.96	0.89	0.74	0.6	1.00	0.92	**0.77**	0.6	1.00	0.96	0.80	0.6	1.00	1.00	0.90	0.7
		ΔT	28.44	26.50	22.87	19.1	28.39	26.44	22.81	19.0	28.66	26.72	23.09	19.3	28.37	26.42	**22.79**	19.0	26.71	26.16	22.53	18.8	25.19	25.62	23.75	20.0
		kW	6.24	6.24	6.22	6.3	6.98	6.97	6.96	7.0	7.79	7.79	7.78	7.8	8.68	8.68	**8.66**	8.7	9.67	9.67	9.65	9.7	10.83	10.83	10.82	10.9
		Amps	25.13	25.10	25.04	25.3	28.48	28.46	28.40	28.7	32.23	32.21	32.15	32.4	36.29	36.27	**36.21**	36.5	40.83	40.80	40.74	41.0	46.14	46.12	46.06	46.3
		Hi PR	267	268	270	274.3	308	309	311	315.9	352	353	355	359.5	399	400	**402**	406.4	449	451	452	457.0	503	505	506	511.0
		Lo PR	128	135	138	143.7	128	143	146	151.7	148	150	153	158.6	148	152	**159**	164.5	160	152	163	170.3	167	154	172	171.0
	3375	MBh	103.2	104.6	107.5	112.1	102.3	103.7	106.7	111.2	99.7	101.1	104.1	108.6	95.2	96.6	99.6	104.1	89.7	91.1	94.1	98.6	84.7	86.1	89.1	93.7
		S/T	0.99	0.91	0.76	0.6	0.99	0.91	0.76	0.6	1.00	0.95	0.79	0.6	1.00	0.98	0.81	0.6	1.00	1.00	0.85	0.7	1.00	1.00	0.95	0.8
		ΔT	27.45	25.51	21.88	18.1	27.40	25.45	21.82	18.1	26.85	25.73	22.10	18.3	25.64	25.43	21.80	18.0	24.16	24.54	21.54	17.8	22.82	23.20	22.76	19.0
		kW	6.27	6.27	6.25	6.3	7.01	7.00	6.99	7.0	7.83	7.82	7.81	7.9	8.71	8.71	8.69	8.8	9.70	9.70	9.69	9.7	10.87	10.86	10.85	10.9
		Amps	25.27	25.25	25.19	25.4	28.63	28.60	28.55	28.8	32.38	32.35	32.30	32.6	36.44	36.41	36.35	36.6	40.97	40.95	40.89	41.1	46.29	46.26	46.21	46.5
		Hi PR	269	270	272	276.4	310	312	313	318.1	354	355	357	361.6	401	402	404	408.6	452	453	455	459.2	506	507	509	513.2
		Lo PR	128	137	140	145.9	128	145	148	153.8	150	152	155	160.8	155	153	161	166.7	159	164	166	172.4	163	162	162	173.2
85	2625	MBh	102.0	103.4	106.3	110.9	101.1	102.5	105.5	110.0	98.5	99.9	102.8	107.4	94.0	95.4	98.4	102.9	88.5	89.9	92.9	97.4	83.5	84.9	87.9	92.4
		S/T	0.95	0.88	0.76	0.6	0.95	0.89	0.76	0.6	0.99	0.92	0.79	0.7	1.00	0.95	0.82	0.7	1.00	1.00	0.86	0.7	1.00	1.00	0.94	0.8
		ΔT	33.44	31.49	27.86	24.1	33.38	31.44	27.81	24.0	33.66	31.71	28.08	24.3	32.55	31.42	27.79	24.0	30.65	31.14	27.53	23.8	28.92	29.41	28.74	25.0
		kW	6.22	6.21	6.20	6.3	6.95	6.95	6.93	7.0	7.77	7.76	7.75	7.8	8.66	8.65	8.64	8.7	9.65	9.64	9.63	9.7	10.81	10.80	10.79	10.8
		Amps	25.02	24.99	24.93	25.2	28.37	28.35	28.29	28.5	32.12	32.10	32.04	32.3	36.18	36.16	36.10	36.4	40.72	40.69	40.63	40.9	46.03	46.01	45.95	46.2
		Hi PR	266	267	269	273.3	307	308	310	314.9	351	352	354	358.5	398	399	401	405.4	448	450	451	456.0	502	504	505	510.0
		Lo PR	133	135	138	143.8	141	142	146	151.7	148	142	153	158.7	150	141	159	164.6	155	153	163	170.3	159	169	172	171.1
	3000	MBh	103.3	104.7	107.7	112.2	102.4	103.8	106.8	111.3	99.8	101.2	104.2	108.7	95.3	96.7	99.7	104.2	89.8	91.2	94.2	98.8	84.8	86.2	89.2	93.8
		S/T	1.00	0.96	0.82	0.7	1.00	0.96	0.82	0.7	1.00	1.00	0.85	0.7	1.00	1.00	0.88	0.7	1.00	1.00	0.92	0.8	1.00	1.00	1.00	0.8
		ΔT	31.29	30.32	26.68	22.9	31.02	30.26	26.63	22.9	30.23	30.54	26.90	23.1	28.88	29.30	26.61	22.8	27.22	27.64	26.35	22.6	25.70	26.13	27.03	23.8
		kW	6.26	6.25	6.24	6.3	6.99	6.98	6.97	7.0	7.81	7.80	7.79	7.8	8.70	8.69	8.68	8.7	9.69	9.68	9.67	9.7	10.85	10.84	10.83	10.9
		Amps	25.19	25.16	25.11	25.4	28.55	28.52	28.47	28.7	32.30	32.27	32.21	32.5	36.36	36.33	36.27	36.5	40.89	40.86	40.81	41.1	46.21	46.18	46.13	46.4
		Hi PR	268	269	271	275.5	310	311	313	317.1	353	354	356	360.7	400	401	403	407.7	451	452	454	458.3	505	506	508	512.3
		Lo PR	136	137	140	145.7	143	142	148	153.6	150	141	155	160.6	156	158	161	166.5	162	163	165	172.3	169	167	167	174.3
	3375	MBh	104.8	106.2	109.2	113.8	103.9	105.4	108.3	112.9	101.3	102.8	105.7	110.3	96.9	98.3	101.3	105.8	91.4	92.8	95.8	100.3	86.4	87.8	90.8	95.3
		S/T	1.00	1.00	0.87	0.7	1.00	1.00	0.88	0.7	1.00	1.00	0.91	0.7	1.00	1.00	0.94	0.8	1.00	1.00	0.98	0.8	1.00	1.00	1.00	0.9
		ΔT	28.24	28.62	25.69	21.9	28.00	28.38	25.64	21.9	27.30	27.68	25.92	22.2	26.09	26.47	25.62	21.9	24.62	25.00	25.36	21.6	23.27	23.65	24.45	22.8
		kW	6.29	6.28	6.27	6.3	7.02	7.02	7.00	7.1	7.84	7.83	7.82	7.9	8.73	8.72	8.71	8.8	9.72	9.71	9.70	9.8	10.88	10.87	10.86	10.9
		Amps	25.34	25.31	25.25	25.5	28.70	28.67	28.61	28.9	32.44	32.42	32.36	32.6	36.50	36.48	36.42	36.7	41.04	41.01	40.95	41.2	46.36	46.33	46.27	46.5
		Hi PR	270	271	273	277.7	312	313	315	319.3	355	356	358	362.9	402	403	405	409.8	453	454	456	460.4	507	508	510	514.5
		Lo PR	137	139	142	147.8	145	147	150	155.8	152	154	157	162.7	158	160	163	168.6	164	165	166	174.4	171	173	172	176.4

IDB: Entering Indoor Dry Bulb Temperature Shaded area reflects ACCA (TVA) conditions **kW = Total system power**

High and low pressures are measured at the liquid and suction access fittings. **Amps: Unit amps (comp.+ evaporator + condenser fan motors)**

Design Subcooling, 16 - 19 °F @ the liquid access fitting connection ARI 95 test conditions. Design Superheat 8 - 12°F @ the compressor suction access fitting connection.

			Outdoor Ambient Temperature																							
			65				75				85				95				105				115			
			Entering Indoor Wet Bulb Temperature																							
IDB	Airflow	ID WB	59	63	67	71	59	63	67	71	59	63	67	71	59	63	67	71	59	63	67	71	59	63	67	71
70	3325	MBh	117.4	119.0	122.6	-	116.3	118.0	121.5	-	113.2	114.9	118.4	-	107.9	109.6	113.1	-	101.4	103.1	106.6	-	95.5	97.2	100.7	-
		S/T	0.62	0.55	0.44	-	0.62	0.56	0.44	-	0.65	0.58	0.46	-	0.67	0.60	0.47	-	0.70	0.63	0.49	-	0.79	0.71	0.56	-
		ΔT	19.83	18.01	14.60	-	19.78	17.96	14.55	-	20.04	18.21	14.81	-	19.76	17.94	14.53	-	19.52	17.69	14.29	-	20.66	18.84	15.43	-
		kW	7.30	7.29	7.28	-	8.18	8.17	8.16	-	9.16	9.16	9.14	-	10.23	10.22	10.21	-	11.42	11.41	11.39	-	12.81	12.80	12.79	-
		Amps	28.31	28.28	28.21	-	32.34	32.31	32.24	-	36.84	36.81	36.74	-	41.71	41.67	41.60	-	47.14	47.11	47.04	-	53.52	53.49	53.42	-
		Hi PR	271	273	275	-	314	315	317	-	359	360	362	-	408	409	411	-	460	461	463	-	515	516	518	-
		Lo PR	131	132	136	-	139	140	144	-	143	147	151	-	152	148	157	-	157	159	158	-	165	166	170	-
	3850	MBh	119.0	120.7	124.2	-	118.0	119.6	123.2	-	114.9	116.6	120.1	-	109.6	111.3	114.8	-	103.1	104.8	108.3	-	97.2	98.9	102.4	-
		S/T	0.66	0.59	0.46	-	0.67	0.59	0.46	-	0.69	0.62	0.48	-	0.72	0.64	0.49	-	0.75	0.67	0.51	-	0.85	0.75	0.59	-
		ΔT	18.62	16.79	13.39	-	18.57	16.74	13.34	-	18.82	17.00	13.59	-	18.55	16.72	13.32	-	18.30	16.48	13.08	-	19.45	17.62	14.22	-
		kW	7.35	7.34	7.33	-	8.23	8.22	8.21	-	9.21	9.21	9.19	-	10.28	10.27	10.26	-	11.47	11.46	11.44	-	12.86	12.85	12.84	-
		Amps	28.54	28.51	28.44	-	32.57	32.54	32.47	-	37.07	37.04	36.97	-	41.94	41.90	41.84	-	47.37	47.34	47.27	-	53.75	53.72	53.65	-
		Hi PR	274	275	277	-	317	318	320	-	362	363	365	-	410	411	413	-	462	463	465	-	518	519	521	-
		Lo PR	133	134	138	-	141	142	146	-	145	149	153	-	154	151	159	-	159	161	162	-	167	168	172	-
	4275	MBh	120.7	122.3	125.9	-	119.6	121.3	124.8	-	116.5	118.2	121.7	-	111.2	112.9	116.4	-	104.7	106.4	109.9	-	98.8	100.5	104.0	-
		S/T	0.69	0.61	0.47	-	0.70	0.62	0.47	-	0.73	0.64	0.49	-	0.75	0.66	0.50	-	0.78	0.69	0.52	-	0.89	0.79	0.61	-
		ΔT	17.79	15.97	12.56	-	17.74	15.92	12.51	-	18.00	16.17	12.77	-	17.72	15.90	12.49	-	17.48	15.66	12.25	-	18.62	16.80	13.39	-
		kW	7.39	7.38	7.36	-	8.27	8.26	8.24	-	9.25	9.24	9.23	-	10.31	10.31	10.29	-	11.50	11.49	11.48	-	12.89	12.89	12.87	-
		Amps	28.70	28.67	28.60	-	32.73	32.69	32.63	-	37.22	37.19	37.12	-	42.09	42.06	41.99	-	47.53	47.50	47.43	-	53.91	53.88	53.81	-
		Hi PR	276	277	279	-	319	320	322	-	364	365	367	-	412	413	415	-	464	465	467	-	520	521	523	-
		Lo PR	135	136	140	-	143	144	148	-	148	151	155	-	149	153	161	-	161	163	164	-	169	170	174	-
75	3325	MBh	118.0	119.6	123.2	128.5	116.9	118.6	122.1	127.5	113.8	115.5	119.0	124.4	108.5	110.2	113.7	119.1	102.0	103.7	107.2	112.6	96.1	97.8	101.3	106.7
		S/T	0.74	0.67	0.55	0.4	0.74	0.68	0.56	0.4	0.77	0.70	0.58	0.4	0.80	0.73	0.60	0.5	0.84	0.77	0.62	0.5	0.94	0.85	0.70	0.5
		ΔT	23.84	22.02	18.61	15.1	23.79	21.97	18.56	15.0	24.05	22.22	18.82	15.3	23.77	21.95	18.54	15.0	23.53	21.70	18.30	14.8	24.67	22.85	19.44	15.9
		kW	7.30	7.29	7.27	7.3	8.18	8.17	8.15	8.2	9.16	9.15	9.14	9.2	10.22	10.21	10.20	10.3	11.41	11.40	11.39	11.5	12.80	12.80	12.78	12.8
		Amps	28.28	28.25	28.18	28.5	32.31	32.28	32.21	32.5	36.81	36.78	36.71	37.0	41.68	41.65	41.58	41.9	47.12	47.09	47.02	47.3	53.50	53.47	53.40	53.7
		Hi PR	272	273	275	279.5	315	316	318	322.3	359	361	363	367.3	408	409	411	415.6	460	461	463	467.7	516	517	519	523.4
		Lo PR	131	132	136	141.3	139	140	144	149.3	139	147	151	156.3	139	151	157	162.2	157	159	161	168.0	165	166	170	167.4
	3850	MBh	119.6	121.3	124.8	130.2	118.6	120.2	123.8	129.2	115.5	117.2	120.7	126.1	110.2	111.9	115.4	120.8	103.7	105.4	108.9	114.3	97.8	99.5	103.0	108.4
		S/T	0.80	0.73	0.59	0.5	0.81	0.73	0.59	0.5	0.84	0.76	0.62	0.5	0.87	0.78	0.64	0.5	0.91	0.82	0.66	0.5	1.00	0.92	0.75	0.6
		ΔT	22.63	20.80	17.40	13.9	22.58	20.75	17.35	13.8	22.83	21.01	17.60	14.1	22.56	20.73	17.33	13.8	22.31	20.49	17.09	13.6	23.09	21.63	18.23	14.7
		kW	7.35	7.34	7.32	7.4	8.23	8.22	8.20	8.3	9.21	9.20	9.19	9.3	10.27	10.27	10.25	10.3	11.46	11.45	11.44	11.5	12.85	12.85	12.83	12.9
		Amps	28.52	28.48	28.41	28.7	32.54	32.51	32.44	32.8	37.04	37.01	36.94	37.2	41.91	41.88	41.81	42.1	47.35	47.32	47.25	47.6	53.73	53.70	53.63	53.9
		Hi PR	274	275	277	282.0	317	318	320	324.9	362	363	365	369.8	410	411	413	418.1	462	464	466	470.3	518	519	521	525.9
		Lo PR	133	135	138	143.4	140	142	146	151.4	139	149	153	158.4	139	154	159	164.3	160	155	164	170.1	148	168	172	170.8
	4275	MBh	121.3	122.9	126.5	131.8	120.2	121.9	125.4	130.8	117.1	118.8	122.3	127.7	111.8	113.5	117.0	122.4	105.3	107.0	110.5	115.9	99.4	101.1	104.6	110.0
		S/T	0.85	0.76	0.62	0.5	0.85	0.77	0.62	0.5	0.88	0.80	0.65	0.5	0.91	0.82	0.66	0.5	0.96	0.86	0.69	0.5	1.00	0.97	0.78	0.6
		ΔT	21.80	19.98	16.57	13.0	21.75	19.93	16.52	13.0	22.01	20.18	16.78	13.3	21.73	19.91	16.50	13.0	21.49	19.66	16.26	12.7	21.14	20.81	17.40	13.9
		kW	7.38	7.37	7.36	7.4	8.26	8.25	8.24	8.3	9.24	9.24	9.22	9.3	10.31	10.30	10.28	10.4	11.49	11.49	11.47	11.5	12.89	12.88	12.87	12.9
		Amps	28.67	28.64	28.57	28.9	32.70	32.67	32.60	32.9	37.20	37.17	37.10	37.4	42.07	42.03	41.96	42.3	47.50	47.47	47.40	47.7	53.88	53.85	53.78	54.1
		Hi PR	276	277	279	284.0	319	320	322	326.9	364	365	367	371.8	412	413	415	420.1	464	466	468	472.2	520	521	523	527.9
		Lo PR	135	136	140	145.3	139	144	148	153.3	139	151	155	160.2	139	156	161	166.1	161	157	166	171.9	169	170	174	174.0

IDB: Entering Indoor Dry Bulb Temperature Shaded area reflects ACCA (TVA) conditions **kW = Total system power**

High and low pressures are measured at the liquid and suction access fittings. **Amps: Unit amps (comp.+ evaporator + condenser fan motors)**

Design Subcooling, 16 - 19 °F @ the liquid access fitting connection ARI 95 test conditions. Design Superheat 8 - 12°F @ the compressor suction access fitting connection.

			Outdoor Ambient Temperature																							
			65				75				85				95				105				115			
			Entering Indoor Wet Bulb Temperature																							
IDB	Airflow	ID WB	59	63	67	71	59	63	67	71	59	63	67	71	59	63	67	71	59	63	67	71	59	63	67	71
80	3325	MBh	118.6	120.2	123.8	129.1	117.5	119.2	122.7	128.1	114.4	116.1	119.6	125.0	109.1	110.8	114.3	119.7	102.6	104.3	107.8	113.2	96.7	98.4	101.9	107.3
		S/T	0.86	0.79	0.67	0.5	0.87	0.80	0.67	0.5	0.90	0.83	0.70	0.6	0.93	0.86	0.72	0.6	0.98	0.90	0.76	0.6	1.00	1.00	0.84	0.7
		ΔT	27.88	26.05	22.65	19.1	27.83	26.00	22.60	19.1	28.08	26.26	22.85	19.3	27.81	25.98	22.58	19.1	27.56	25.74	22.34	18.8	26.45	26.88	23.48	19.9
		kW	7.30	7.29	7.28	7.3	8.18	8.17	8.16	8.2	9.16	9.16	9.14	9.2	10.23	10.22	10.20	10.3	11.41	11.41	11.39	11.5	12.81	12.80	12.79	12.9
		Amps	28.31	28.27	28.21	28.5	32.34	32.30	32.23	32.5	36.83	36.80	36.73	37.0	41.70	41.67	41.60	41.9	47.14	47.11	47.04	47.3	53.52	53.49	53.42	53.7
		Hi PR	272	273	275	280.0	315	316	318	322.8	360	361	363	367.8	408	409	411	416.1	460	462	464	468.2	516	517	519	523.9
		Lo PR	127	133	136	141.9	128	141	144	149.9	128	148	151	156.8	152	153	157	162.7	158	152	163	168.5	165	167	170	170.6
	3850	MBh	120.2	121.9	125.4	130.8	119.2	120.9	124.4	129.8	116.1	117.8	121.3	126.7	110.8	112.5	**116.0**	121.4	104.3	106.0	109.5	114.9	98.4	100.1	103.6	109.0
		S/T	0.94	0.86	0.72	0.6	0.95	0.87	0.73	0.6	0.98	0.90	0.76	0.6	1.00	0.93	**0.78**	0.6	1.00	0.98	0.82	0.6	1.00	1.00	0.91	0.7
		ΔT	26.66	24.84	21.43	17.9	26.61	24.79	21.38	17.9	26.87	25.05	21.64	18.1	26.16	24.77	**21.37**	17.8	24.63	24.53	21.12	17.6	23.24	23.63	22.26	18.7
		kW	7.35	7.34	7.33	7.4	8.23	8.22	8.21	8.3	9.21	9.21	9.19	9.3	10.28	10.27	**10.25**	10.3	11.47	11.46	11.44	11.5	12.86	12.85	12.84	12.9
		Amps	28.54	28.50	28.44	28.7	32.57	32.53	32.46	32.8	37.06	37.03	36.96	37.3	41.93	41.90	**41.83**	42.1	47.37	47.34	47.27	47.6	53.75	53.72	53.65	54.0
		Hi PR	275	276	278	282.5	318	319	321	325.4	362	364	366	370.3	411	412	**414**	418.6	463	464	466	470.8	519	520	522	526.4
		Lo PR	127	135	138	144.0	127	143	146	152.0	148	150	153	158.9	153	152	**159**	164.8	160	153	165	170.6	167	161	172	174.0
	4275	MBh	121.9	123.5	127.1	132.5	120.8	122.5	126.0	131.4	117.7	119.4	122.9	128.3	112.4	114.1	117.6	123.0	106.0	107.6	111.1	116.5	100.0	101.7	105.2	110.6
		S/T	1.00	0.91	0.76	0.6	1.00	0.92	0.77	0.6	1.00	0.95	0.80	0.6	1.00	0.99	0.82	0.7	1.00	1.00	0.86	0.7	1.00	1.00	0.96	0.8
		ΔT	25.84	24.01	20.61	17.1	25.69	23.96	20.56	17.0	25.04	24.22	20.81	17.3	23.91	23.94	20.54	17.0	22.53	22.89	20.30	16.8	21.27	21.63	21.44	17.9
		kW	7.38	7.38	7.36	7.4	8.26	8.26	8.24	8.3	9.25	9.24	9.23	9.3	10.31	10.30	10.29	10.4	11.50	11.49	11.48	11.5	12.89	12.89	12.87	12.9
		Amps	28.69	28.66	28.59	28.9	32.72	32.69	32.62	32.9	37.22	37.19	37.12	37.4	42.09	42.06	41.99	42.3	47.52	47.49	47.42	47.7	53.91	53.87	53.80	54.1
		Hi PR	277	278	280	284.5	320	321	323	327.4	364	366	368	372.3	413	414	416	420.6	465	466	468	472.7	521	522	524	528.4
		Lo PR	128	137	140	145.9	143	145	148	153.8	150	152	155	160.8	156	153	161	166.7	162	164	167	172.5	167	166	166	177.1
85	3325	MBh	120.6	122.2	125.7	131.1	119.5	121.2	124.7	130.1	116.4	118.1	121.6	127.0	111.1	112.8	116.3	121.7	104.6	106.3	109.8	115.2	98.7	100.4	103.9	109.3
		S/T	0.95	0.89	0.76	0.6	0.96	0.89	0.77	0.6	0.99	0.92	0.80	0.7	1.00	0.96	0.82	0.7	1.00	1.00	0.86	0.7	1.00	1.00	0.95	0.8
		ΔT	31.46	29.63	26.23	22.7	31.41	29.58	26.18	22.7	31.66	29.84	26.43	22.9	30.38	29.56	26.16	22.6	28.61	29.06	25.92	22.4	26.99	27.45	27.06	23.5
		kW	7.32	7.31	7.29	7.4	8.20	8.19	8.18	8.2	9.18	9.17	9.16	9.2	10.24	10.24	10.22	10.3	11.43	11.42	11.41	11.5	12.83	12.82	12.80	12.9
		Amps	28.38	28.35	28.28	28.6	32.41	32.38	32.31	32.6	36.91	36.88	36.81	37.1	41.78	41.75	41.68	42.0	47.22	47.18	47.12	47.4	53.60	53.56	53.50	53.8
		Hi PR	273	275	277	281.3	316	317	319	324.1	361	362	364	369.0	410	411	413	417.4	462	463	465	469.5	517	519	520	525.2
		Lo PR	133	135	138	143.9	141	142	146	151.8	148	142	153	158.8	154	141	159	164.7	160	159	165	170.5	165	169	172	175.1
	3850	MBh	122.2	123.9	127.4	132.8	121.2	122.8	126.4	131.8	118.1	119.8	123.3	128.7	112.8	114.5	118.0	123.4	106.3	108.0	111.5	116.9	100.4	102.1	105.6	111.0
		S/T	1.00	0.97	0.83	0.7	1.00	0.98	0.84	0.7	1.00	1.00	0.87	0.7	1.00	1.00	0.90	0.7	1.00	1.00	0.94	0.8	1.00	1.00	1.00	0.9
		ΔT	28.86	28.42	25.01	21.5	28.61	28.37	24.96	21.4	27.89	28.28	25.22	21.7	26.63	27.03	24.95	21.4	25.10	25.50	24.70	21.2	23.71	24.10	24.93	22.3
		kW	7.37	7.36	7.35	7.4	8.25	8.24	8.23	8.3	9.23	9.22	9.21	9.3	10.29	10.29	10.27	10.3	11.48	11.48	11.46	11.5	12.88	12.87	12.85	12.9
		Amps	28.61	28.58	28.51	28.8	32.64	32.61	32.54	32.9	37.14	37.11	37.04	37.3	42.01	41.98	41.91	42.2	47.45	47.41	47.35	47.7	53.83	53.79	53.73	54.0
		Hi PR	276	277	279	283.8	319	320	322	326.7	364	365	367	371.6	412	413	415	419.9	464	465	467	472.0	520	521	523	527.7
		Lo PR	137	137	140	146.0	143	141	148	153.9	150	152	155	160.9	156	158	161	166.8	162	164	166	172.6	169	171	171	178.5
	4275	MBh	123.9	125.5	129.1	134.4	122.8	124.5	128.0	133.4	119.7	121.4	124.9	130.3	114.4	116.1	119.6	125.0	107.9	109.6	113.1	118.5	102.0	103.7	107.2	112.6
		S/T	1.00	1.00	0.88	0.7	1.00	1.00	0.89	0.7	1.00	1.00	0.92	0.8	1.00	1.00	0.95	0.8	1.00	1.00	0.99	0.8	1.00	1.00	1.00	0.9
		ΔT	26.34	26.69	24.19	20.7	26.11	26.47	24.14	20.6	25.46	25.81	24.40	20.9	24.33	24.69	24.12	20.6	22.95	23.31	23.88	20.3	21.70	22.05	22.80	21.5
		kW	7.40	7.39	7.38	7.4	8.28	8.27	8.26	8.3	9.26	9.26	9.24	9.3	10.33	10.32	10.31	10.4	11.52	11.51	11.49	11.6	12.91	12.90	12.89	13.0
		Amps	28.77	28.74	28.67	29.0	32.80	32.77	32.70	33.0	37.30	37.26	37.20	37.5	42.16	42.13	42.06	42.4	47.60	47.57	47.50	47.8	53.98	53.95	53.88	54.2
		Hi PR	278	279	281	285.8	321	322	324	328.6	366	367	369	373.5	414	415	417	421.9	466	467	469	474.0	522	523	525	529.7
		Lo PR	137	139	142	147.8	145	147	150	155.8	152	154	157	162.8	158	160	163	168.7	164	166	165	174.5	171	173	177	180.4

IDB: Entering Indoor Dry Bulb Temperature Shaded area reflects ACCA (TVA) conditions **kW = Total system power**

High and low pressures are measured at the liquid and suction access fittings. **Amps: Unit amps (comp.+ evaporator + condenser fan motors)**

Design Subcooling, 16 - 19 °F @ the liquid access fitting connection ARI 95 test conditions. Design Superheat 8 - 12°F @ the compressor suction access fitting connection.

Electrical Heater Data

Model #	Min Airflow	EHXD-3M15	EHXD-3M30	EHXD-3M45	EHXD-4M15	EHXD-4M30	EHXD-4M45	EHXD-7M15	EHXD-7M30	EHXD-7M45
DSH0903	2400	X	X	X						
DSH0904					X	X	X			
DSH0907								X	X	X
DSH1023	2750	X	X	X						
DSH1024					X	X	X			
DSH1027								X	X	X
DSH1023	3200	X	X	X						
DSH1204					X	X	X			
DSH1207								X	X	X
DSH1503	3750	X	X	X						
DSH1504					X	X	X			
DSH1507								X	X	X

7.5 Ton HP Data • Models: DSH0903D, DSH0904D, DSH0907D

Down Flow				
Speed Tap	ESP	CFM	RPM	BHP
T1**	0.2	1974	438	0.23
	0.4	1789	523	0.27
	0.6	-	-	-
	0.8	-	-	-
T2**	0.2	2131	458	0.28
	0.4	1969	531	0.32
	0.6	1782	616	0.38
	0.8	-	-	-
T3	0.2	3072	567	0.69
	0.4	2947	628	0.76
	0.6	2837	684	0.83
	0.8	2695	737	0.89
T4	0.2	3307	840	1.17
	0.4	3216	897	1.25
	0.6	3119	951	1.33
	0.8	3014	1005	1.40
T5	0.2	3370	796	1.17
	0.4	3289	852	1.25
	0.6	3201	905	1.33
	0.8	3070	958	1.40
T6	0.2	2411	488	0.37
	0.4	-	-	-
	0.6	-	-	-
	0.8	-	-	-
T7	0.2	2666	518	0.48
	0.4	2531	583	0.54
	0.6	2393	647	0.59
	0.8	2231	712	0.65
T8	0.2	2798	533	0.53
	0.4	2658	596	0.60
	0.6	2530	654	0.66
	0.8	2377	717	0.72
T9	0.2	3307	840	1.35
	0.4	3216	897	1.44
	0.6	3119	951	1.53
	0.8	3014	1005	1.61
T10	0.2	3370	796	1.34
	0.4	3289	852	1.43
	0.6	3201	905	1.52
	0.8	3070	958	1.61

Horizontal Flow				
Speed Tap	ESP	CFM	RPM	BHP
T1**	0.2	1928	449	0.24
	0.4	1774	535	0.28
	0.6	-	-	-
	0.8	-	-	-
T2**	0.2	2141	486	0.30
	0.4	1978	556	0.34
	0.6	1790	639	0.39
	0.8	-	-	-
T3	0.2	3031	594	0.72
	0.4	2909	649	0.79
	0.6	2799	699	0.85
	0.8	2682	749	0.91
T4	0.2	3251	849	1.18
	0.4	3141	906	1.26
	0.6	3035	961	1.34
	0.8	2930	1017	1.42
T5	0.2	3335	807	1.18
	0.4	3229	861	1.26
	0.6	3125	914	1.34
	0.8	3022	968	1.42
T6	0.2	2375	500	0.38
	0.4	-	-	-
	0.6	-	-	-
	0.8	-	-	-
T7	0.2	2636	534	0.49
	0.4	2506	594	0.55
	0.6	2379	652	0.60
	0.8	-	-	-
T8	0.2	2757	549	0.55
	0.4	2637	607	0.61
	0.6	2509	660	0.66
	0.8	2377	723	0.73
T9	0.2	3251	849	1.18
	0.4	3141	906	1.26
	0.6	3035	961	1.34
	0.8	2930	1017	1.42
T10	0.2	3335	807	1.18
	0.4	3229	861	1.26
	0.6	3125	914	1.34
	0.8	3022	968	1.42

Shaded speed tap - Airflow for supplimental heat
.** (T1) and (T2) are part load only

7.5 Ton Fan Data • Models: DSH0903L, DSH0904L, DSH0907L

Down Flow				
Speed Tap	ESP	CFM	RPM	BHP
T1**	0.2	2298	473	0.33
	0.4	2147	549	0.39
	0.6	1967	619	0.44
	0.8	1637	732	0.52
	1	-	-	-
	1.2	-	-	-
	1.4	-	-	-
T2**	0.2	2345	476	0.34
	0.4	2187	549	0.39
	0.6	2019	621	0.45
	0.8	1686	731	0.53
	1	1496	790	0.57
	1.2	-	-	-
	1.4	-	-	-
T3	0.2	3538	619	0.97
	0.4	3413	672	1.06
	0.6	3301	723	1.14
	0.8	3201	770	1.21
	1	3070	819	1.29
	1.2	2960	870	1.37
	1.4	2839	922	1.45
T4	0.2	3884	710	1.16
	0.4	3721	765	1.25
	0.6	3582	816	1.33
	0.8	3460	865	1.41
	1	3334	918	1.50
	1.2	3070	984	1.60
	1.4	3053	1053	1.72
T5	0.2	3711	638	1.11
	0.4	3592	691	1.20
	0.6	3489	740	1.28
	0.8	3391	786	1.36
	1	3295	835	1.45
	1.2	3178	882	1.53
	1.4	2990	929	1.61
T6	0.2	3027	554	0.64
	0.4	2895	614	0.71
	0.6	2786	670	0.77
	0.8	2657	725	0.84
	1	2500	784	0.91
	1.2	-	-	-
	1.4	-	-	-
T7	0.2	3307	587	0.81
	0.4	3170	644	0.88
	0.6	3063	698	0.96
	0.8	2946	747	1.03
	1	2816	801	1.10
	1.2	2678	856	1.18
	1.4	2403	941	1.29
T8	0.2	3538	619	0.97
	0.4	3413	672	1.06
	0.6	3301	723	1.14
	0.8	3201	770	1.21
	1	3070	819	1.29
	1.2	2960	870	1.37
	1.4	2839	922	1.45
T9	0.2	3884	710	1.16
	0.4	3721	765	1.25
	0.6	3582	816	1.33
	0.8	3460	865	1.41
	1	3334	918	1.50
	1.2	3189	984	1.60
	1.4	3051	1053	1.72
T10	0.2	3711	638	1.26
	0.4	3592	691	1.36
	0.6	3489	740	1.46
	0.8	3391	786	1.55
	1	3295	835	1.65
	1.2	3178	882	1.74
	1.4	3051	929	1.83

Horizontal Flow				
Speed Tap	ESP	CFM	RPM	BHP
T1**	0.2	2284	494	0.35
	0.4	2135	562	0.40
	0.6	1976	632	0.45
	0.8	1626	743	0.52
	1	-	-	-
	1.2	-	-	-
	1.4	-	-	-
T2**	0.2	2304	497	0.36
	0.4	2152	562	0.40
	0.6	1998	634	0.46
	0.8	1646	746	0.54
	1	-	-	-
	1.2	-	-	-
	1.4	-	-	-
T3	0.2	3466	652	1.03
	0.4	3361	701	1.10
	0.6	3261	744	1.17
	0.8	3176	790	1.24
	1	3058	837	1.32
	1.2	2952	885	1.39
	1.4	2816	943	1.48
T4	0.2	3601	677	1.10
	0.4	3478	736	1.20
	0.6	3370	790	1.29
	0.8	3271	840	1.37
	1	3166	893	1.46
	1.2	3010	958	1.56
	1.4	2917	1024	1.67
T5	0.2	3622	676	1.17
	0.4	3530	723	1.25
	0.6	3432	766	1.33
	0.8	3341	810	1.40
	1	3251	852	1.48
	1.2	3144	898	1.56
	1.4	3006	947	1.64
T6	0.2	2983	582	0.67
	0.4	2864	635	0.73
	0.6	2749	687	0.79
	0.8	2630	740	0.85
	1	2492	801	0.93
	1.2	-	-	-
	1.4	-	-	-
T7	0.2	3230	617	0.83
	0.4	3112	667	0.90
	0.6	3005	716	0.97
	0.8	2905	761	1.03
	1	2801	817	1.10
	1.2	2673	872	1.18
	1.4	2325	978	1.32
T8	0.2	3466	652	1.03
	0.4	3361	701	1.10
	0.6	3261	744	1.17
	0.8	3176	790	1.24
	1	3058	837	1.32
	1.2	2952	885	1.39
	1.4	2816	943	1.48
T9	0.2	3601	677	1.10
	0.4	3478	736	1.20
	0.6	3370	790	1.29
	0.8	3271	840	1.37
	1	3166	893	1.46
	1.2	3040	958	1.56
	1.4	3917	1024	1.67
T10	0.2	3622	676	1.17
	0.4	3530	723	1.25
	0.6	3432	766	1.33
	0.8	3341	810	1.40
	1	3251	852	1.48
	1.2	3144	898	1.56
	1.4	3006	947	1.64

Shaded speed tap - Airflow for supplimental heat
.** (T1) and (T2) are part load only

7.5 Ton Fan Data • Models: DSH0903W, DSH0904W, DSH0907W

Down Flow				
Speed Tap	ESP	CFM	RPM	BHP
T1**	0.2	2465	490	0.36
	0.4	2293	561	0.42
	0.6	2148	626	0.46
	0.8	1911	715	0.53
	1	1614	797	0.59
	1.2	-	-	-
	1.4	-	-	-
	1.6	-	-	-
	1.8	-	-	-
T2**	0.2	2465	499	0.38
	0.4	2325	567	0.44
	0.6	2182	632	0.49
	0.8	1993	705	0.54
	1	1659	804	0.62
	1.2	1498	853	0.66
	1.4	-	-	-
	1.6	-	-	-
	1.8	-	-	-
T3	0.2	3657	556	0.93
	0.4	3559	616	1.03
	0.6	3467	669	1.12
	0.8	3391	710	1.19
	1	3290	761	1.27
	1.2	3176	816	1.36
	1.4	3058	868	1.45
	1.6	2888	937	1.57
	1.8	2785	975	1.63
T4	0.2	3748	664	1.16
	0.4	3637	711	1.24
	0.6	3539	756	1.32
	0.8	3448	803	1.40
	1	3339	847	1.48
	1.2	3226	893	1.56
	1.4	3108	947	1.65
	1.6	3001	999	1.74
	1.8	2840	1041	1.82
T5	0.2	3850	674	1.25
	0.4	3745	723	1.34
	0.6	3655	770	1.43
	0.8	3546	815	1.51
	1	3445	858	1.59
	1.2	3359	902	1.67
	1.4	3242	945	1.75
	1.6	3120	991	1.84
	1.8	3001	1042	1.93

Horizontal Flow				
Speed Tap	ESP	CFM	RPM	BHP
T1**	0.2	2368	510	0.38
	0.4	2247	572	0.42
	0.6	2113	632	0.47
	0.8	1961	704	0.52
	1	1600	802	0.60
	1.2	-	-	-
	1.4	-	-	-
	1.6	-	-	-
	1.8	-	-	-
T2**	0.2	2449	504	0.39
	0.4	2330	571	0.44
	0.6	2181	638	0.49
	0.8	1991	59	0.05
	1	1645	35	0.03
	1.2	-	-	-
	1.4	-	-	-
	1.6	-	-	-
	1.8	-	-	-
T3	0.2	3638	587	0.98
	0.4	3533	642	1.07
	0.6	3437	691	1.15
	0.8	3359	728	1.22
	1	3256	777	1.30
	1.2	3142	828	1.38
	1.4	3027	876	1.46
	1.6	2863	941	1.57
	1.8	2766	977	1.63
T4	0.2	3711	687	1.20
	0.4	3608	730	1.27
	0.6	3517	772	1.35
	0.8	3434	816	1.42
	1	3334	856	1.49
	1.2	3231	900	1.57
	1.4	3125	951	1.66
	1.6	2986	1001	1.75
	1.8	2885	1041	1.82
T5	0.2	3806	696	1.29
	0.4	3708	741	1.38
	0.6	3624	785	1.46
	0.8	3523	827	1.54
	1	3431	867	1.61
	1.2	3352	908	1.69
	1.4	3246	949	1.76
	1.6	3136	993	1.84
	1.8	2989	1041	1.93

7.5 Ton Fan Data • Models: DSH0903W, DSH0904W, DSH0907W

Down Flow				
Speed Tap	ESP	CFM	RPM	BHP
T6	0.2	3502	618	0.90
	0.4	3381	669	0.97
	0.6	3533	721	1.05
	0.8	3145	767	1.12
	1	3047	817	1.19
	1.2	2908	866	1.26
	1.4	2766	918	1.34
	1.6	2491	1010	1.47
	1.8	-	-	-
T7	0.2	3670	637	1.02
	0.4	3542	686	1.10
	0.6	3430	737	1.18
	0.8	3312	785	1.25
	1	3207	832	1.33
	1.2	3098	878	1.40
	1.4	2965	928	1.48
	1.6	2829	982	1.57
	1.8	2544	1070	1.71
T8	0.2	3657	556	0.93
	0.4	3559	616	1.03
	0.6	3467	669	1.12
	0.8	3391	710	1.19
	1	3290	761	1.27
	1.2	3176	816	1.36
	1.4	3058	868	1.45
	1.6	2888	937	1.57
	1.8	2785	975	1.63
T9	0.2	3748	664	1.42
	0.4	3637	711	1.52
	0.6	3539	756	1.62
	0.8	3448	803	1.72
	1	3339	847	1.81
	1.2	3226	893	1.91
	1.4	3108	947	2.03
	1.6	3001	999	2.14
	1.8	2840	1041	2.23
T10	0.2	3850	674	1.98
	0.4	3745	723	2.12
	0.6	3655	770	2.26
	0.8	3546	815	2.39
	1	3445	858	2.52
	1.2	3359	902	2.65
	1.4	3242	945	2.77
	1.6	3120	991	2.91
	1.8	3001	1042	3.06

Horizontal Flow				
Speed Tap	ESP	CFM	RPM	BHP
T6	0.2	3383	644	0.94
	0.4	3283	692	1.01
	0.6	3167	738	1.08
	0.8	3076	785	1.14
	1	2977	827	1.21
	1.2	2849	883	1.29
	1.4	2670	950	1.38
	1.6	2404	1034	1.51
	1.8	-	-	-
T7	0.2	3521	665	1.06
	0.4	3422	713	1.14
	0.6	3325	756	1.21
	0.8	3217	802	1.28
	1	3122	846	1.35
	1.2	3027	871	1.39
	1.4	2893	948	1.51
	1.6	2762	999	1.59
	1.8	2390	1100	1.76
T8	0.2	3711	687	1.15
	0.4	3608	730	1.22
	0.6	3517	772	1.29
	0.8	3434	816	1.36
	1	3334	856	1.43
	1.2	3231	900	1.50
	1.4	3125	951	1.59
	1.6	2986	1001	1.67
	1.8	2885	1041	1.74
T9	0.2	3711	687	1.20
	0.4	3608	730	1.27
	0.6	3517	772	1.35
	0.8	3434	816	1.42
	1	3334	856	1.49
	1.2	3231	900	1.57
	1.4	3125	951	1.66
	1.6	2986	1001	1.75
	1.8	2885	1041	1.82
T10	0.2	3806	696	1.29
	0.4	3708	741	1.38
	0.6	3624	785	1.46
	0.8	3523	827	1.54
	1	3431	867	1.61
	1.2	3352	908	1.69
	1.4	3246	949	1.76
	1.6	3136	993	1.84
	1.8	2989	1041	1.93

Shaded speed tap - Airflow for supplimental heat
.** (T1) and (T2) are part load only

8.5 Ton HP Data • Models: DSH1023D, DSH1024D, DSH1027D

Down Flow				
Speed Tap	ESP	CFM	RPM	BHP
T1**	0.2	1974	438	0.23
	0.4	1789	523	0.27
	0.6	-	-	-
	0.8	-	-	-
T2**	0.2	2131	458	0.28
	0.4	1969	531	0.32
	0.6	1782	616	0.38
	0.8	-	-	-
T3	0.2	3072	567	0.69
	0.4	2947	628	0.76
	0.6	2837	684	0.83
	0.8	2695	737	0.89
T4	0.2	3711	638	1.09
	0.4	3592	691	1.18
	0.6	3430	740	1.26
	0.8	3391	786	1.34
T5	0.2	3737	651	1.16
	0.4	3623	703	1.25
	0.6	3513	751	1.34
	0.8	3410	799	1.42
T6	0.2	2708	521	0.49
	0.4	-	-	-
	0.6	-	-	-
	0.8	-	-	-
T7	0.2	2955	551	0.62
	0.4	2819	612	0.68
	0.6	2715	668	0.75
	0.8	-	-	-
T8	0.2	3072	567	0.69
	0.4	2947	628	0.76
	0.6	2837	684	0.83
	0.8	2695	737	0.89
T9	0.2	3711	638	1.09
	0.4	3592	691	1.18
	0.6	3430	740	1.26
	0.8	3391	786	1.34
T10	0.2	3737	651	1.16
	0.4	3623	703	1.25
	0.6	3513	751	1.34
	0.8	3410	799	1.42

Horizontal Flow				
Speed Tap	ESP	CFM	RPM	BHP
T1**	0.2	1928	449	0.24
	0.4	1774	535	0.28
	0.6	-	-	-
	0.8	-	-	-
T2**	0.2	-	-	-
	0.4	1978	556	0.34
	0.6	1790	639	0.39
	0.8	-	-	-
T3	0.2	3031	594	0.72
	0.4	2909	649	0.79
	0.6	2799	699	0.85
	0.8	2682	749	0.91
T4	0.2	3601	677	1.15
	0.4	3503	724	1.23
	0.6	3405	773	1.31
	0.8	3311	819	1.39
T5	0.2	3686	687	1.22
	0.4	3591	732	1.30
	0.6	3494	775	1.38
	0.8	3402	819	1.46
T6	0.2	2675	543	0.51
	0.4	-	-	-
	0.6	-	-	-
	0.8	-	-	-
T7	0.2	2914	572	0.64
	0.4	2797	630	0.70
	0.6	2680	681	0.76
	0.8	-	-	-
T8	0.2	3062	590	0.72
	0.4	2944	644	0.78
	0.6	2838	693	0.84
	0.8	2713	742	0.90
T9	0.2	3601	677	1.15
	0.4	3503	724	1.23
	0.6	3405	773	1.31
	0.8	3311	819	1.39
T10	0.2	3686	687	1.22
	0.4	3591	732	1.30
	0.6	3494	775	1.38
	0.8	3402	819	1.46

Shaded speed tap - Airflow for supplimental heat
.** (T1) and (T2) are part load only

8.5 Ton Fan Data • Models: DSH1023L, DSH1024L, DSH1027L

Down Flow				
Speed Tap	ESP	CFM	RPM	BHP
T1**	0.2	2298	473	0.33
	0.4	2147	549	0.39
	0.6	1967	619	0.44
	0.8	-	-	-
	1	-	-	-
	1.2	-	-	-
	1.4	-	-	-
T2**	0.2	2345	476	0.34
	0.4	2187	549	0.39
	0.6	2019	621	0.45
	0.8	1686	731	0.53
	1	-	-	-
	1.2	-	-	-
	1.4	-	-	-
T3	0.2	3538	619	0.97
	0.4	3413	672	1.06
	0.6	3301	723	1.14
	0.8	3201	770	1.21
	1	3040	819	1.29
	1.2	2960	870	1.37
	1.4	2839	922	1.45
T4	0.2	3711	638	1.27
	0.4	3592	691	1.35
	0.6	3489	740	1.42
	0.8	3391	786	1.50
	1	3295	835	1.58
	1.2	3178	882	1.67
	1.4	3051	929	1.78
T5	0.2	4156	692	1.50
	0.4	4050	741	1.61
	0.6	3948	785	1.71
	0.8	3843	832	1.81
	1	3750	873	1.90
	1.2	3658	915	1.99
	1.4	3450	959	2.09
T6	0.2	3255	582	0.78
	0.4	3118	640	0.86
	0.6	3005	693	0.93
	0.8	2895	743	0.99
	1	2755	799	1.07
	1.2	2755	799	1.07
	1.4	-	-	-
T7	0.2	3454	605	0.91
	0.4	3339	661	0.99
	0.6	3217	714	1.07
	0.8	3103	763	1.14
	1	2983	815	1.22
	1.2	2858	867	1.30
	1.4	2705	923	1.38
T8	0.2	3711	638	1.11
	0.4	3592	691	1.20
	0.6	3489	740	1.28
	0.8	3391	786	1.36
	1	3295	835	1.45
	1.2	3178	882	1.53
	1.4	3051	929	1.61
T9	0.2	4211	671	1.27
	0.4	4098	712	1.35
	0.6	3967	751	1.42
	0.8	3835	792	1.50
	1	3753	836	1.58
	1.2	3450	882	1.67
	1.4	3449	940	1.78
T10	0.2	4156	692	1.50
	0.4	4050	741	1.61
	0.6	3948	785	1.71
	0.8	3843	832	1.81
	1	3750	873	1.90
	1.2	3658	915	1.99
	1.4	3450	959	2.09

Horizontal Flow				
Speed Tap	ESP	CFM	RPM	BHP
T1**	0.2	2284	494	0.35
	0.4	2135	562	0.40
	0.6	1976	632	0.45
	0.8	-	-	-
	1	-	-	-
	1.2	-	-	-
	1.4	-	-	-
T2**	0.2	2304	497	0.36
	0.4	2152	562	0.40
	0.6	1998	634	0.46
	0.8	-	-	-
	1	-	-	-
	1.2	-	-	-
	1.4	-	-	-
T3	0.2	3466	652	1.03
	0.4	3361	701	1.10
	0.6	3261	744	1.17
	0.8	3176	790	1.24
	1	3058	837	1.32
	1.2	2952	885	1.39
	1.4	2816	943	1.48
T4	0.2	3835	567	1.07
	0.4	3756	603	1.14
	0.6	3662	648	1.23
	0.8	3565	694	1.31
	1	3503	724	1.37
	1.2	3397	776	1.47
	1.4	3262	844	1.60
T5	0.2	3971	505	1.10
	0.4	3897	539	1.17
	0.6	3806	580	1.26
	0.8	3707	627	1.36
	1	3653	652	1.42
	1.2	3551	701	1.53
	1.4	3422	764	1.66
T6	0.2	3205	611	0.82
	0.4	3089	663	0.89
	0.6	2982	710	0.95
	0.8	2877	757	1.01
	1	2732	813	1.09
	1.2	-	-	-
	1.4	-	-	-
T7	0.2	3376	640	0.96
	0.4	3279	689	1.03
	0.6	3172	736	1.10
	0.8	3070	781	1.17
	1	2959	831	1.24
	1.2	2836	881	1.32
	1.4	2650	955	1.43
T8	0.2	3622	676	1.17
	0.4	3530	723	1.25
	0.6	3432	766	1.33
	0.8	3341	810	1.40
	1	3251	852	1.48
	1.2	3144	898	1.56
	1.4	3006	947	1.64
T9	0.2	3835	567	1.07
	0.4	3756	603	1.14
	0.6	3662	648	1.23
	0.8	3565	694	1.31
	1	3503	724	1.37
	1.2	3397	776	1.47
	1.4	3262	844	1.60
T10	0.2	3971	505	1.10
	0.4	3897	539	1.17
	0.6	3806	580	1.26
	0.8	3707	627	1.36
	1	3653	652	1.42
	1.2	3551	701	1.53
	1.4	3422	764	1.66

Shaded speed tap - Airflow for supplimental heat
.** (T1) and (T2) are part load only

8.5 Ton Fan Data • Models: DSH1023W, DSH1024W, DSH1027W

Down Flow				
Speed Tap	ESP	CFM	RPM	BHP
T1**	0.2	2465	490	0.36
	0.4	2293	561	0.42
	0.6	2148	626	0.46
	0.8	1911	715	0.53
	1	-	-	-
	1.2	-	-	-
	1.4	-	-	-
	1.6	-	-	-
	1.8	-	-	-
T2**	0.2	2465	499	0.38
	0.4	2325	567	0.44
	0.6	2182	632	0.49
	0.8	1993	705	0.54
	1	-	-	-
	1.2	-	-	-
	1.4	-	-	-
	1.6	-	-	-
	1.8	-	-	-
T3	0.2	3794	663	1.16
	0.4	3688	711	1.24
	0.6	3572	758	1.32
	0.8	3468	807	1.41
	1	3370	852	1.49
	1.2	3259	895	1.56
	1.4	3144	942	1.64
	1.6	3011	990	1.73
	1.8	2843	1052	1.84
T4	0.2	4121	699	1.43
	0.4	4019	745	1.52
	0.6	3934	790	1.61
	0.8	3830	833	1.70
	1	3697	876	1.79
	1.2	3617	918	1.87
	1.4	3527	959	1.96
	1.6	3408	1002	2.05
	1.8	3262	1048	2.14
T5	0.2	4262	718	1.56
	0.4	4164	761	1.66
	0.6	4060	805	1.75
	0.8	3966	851	1.85
	1	3864	891	1.94
	1.2	3773	932	2.03
	1.4	3687	973	2.12
	1.6	3576	1012	2.20
	1.8	3463	1055	2.30

Horizontal Flow				
Speed Tap	ESP	CFM	RPM	BHP
T1**	0.2	2368	510	0.38
	0.4	2247	572	0.42
	0.6	2113	632	0.47
	0.8	1961	704	0.52
	1	-	-	-
	1.2	-	-	-
	1.4	-	-	-
	1.6	-	-	-
	1.8	-	-	-
T2**	0.2	2449	504	0.39
	0.4	2330	571	0.44
	0.6	2181	638	0.49
	0.8	1991	59	0.05
	1	-	-	-
	1.2	-	-	-
	1.4	-	-	-
	1.6	-	-	-
	1.8	-	-	-
T3	0.2	3711	687	1.20
	0.4	3608	730	1.27
	0.6	3517	772	1.35
	0.8	3434	816	1.42
	1	3334	856	1.49
	1.2	3231	900	1.57
	1.4	3125	951	1.66
	1.6	2986	1001	1.75
	1.8	2885	1041	1.82
T4	0.2	3989	718	1.47
	0.4	3894	761	1.55
	0.6	3816	803	1.64
	0.8	3722	843	1.72
	1	3602	883	1.80
	1.2	3529	922	1.88
	1.4	3449	961	1.96
	1.6	3343	1001	2.04
	1.8	3215	1044	2.13
T5	0.2	4123	750	1.63
	0.4	4032	790	1.72
	0.6	3944	831	1.81
	0.8	3866	868	1.89
	1	3774	905	1.97
	1.2	3690	943	2.05
	1.4	3612	980	2.13
	1.6	3506	943	2.05
	1.8	3401	1068	2.32

8.5 Ton Fan Data • Models: DSH1023W, DSH1024W, DSH1027W

Down Flow				
Speed Tap	ESP	CFM	RPM	BHP
T6	0.2	3600	628	0.96
	0.4	3479	679	1.04
	0.6	3363	728	1.12
	0.8	3256	775	1.19
	1	3144	823	1.26
	1.2	3034	870	1.34
	1.4	2910	921	1.41
	1.6	2726	987	1.52
	1.8	-	-	-
T7	0.2	3785	652	1.11
	0.4	3679	701	1.19
	0.6	3556	748	1.27
	0.8	3451	796	1.36
	1	3359	841	1.43
	1.2	3249	886	1.51
	1.4	3103	933	1.59
	1.6	2981	983	1.67
	1.8	2754	1056	1.80
T8	0.2	3794	663	1.16
	0.4	3688	711	1.24
	0.6	3572	758	1.32
	0.8	3468	807	1.41
	1	3370	852	1.49
	1.2	3259	895	1.56
	1.4	3144	942	1.64
	1.6	3011	990	1.73
	1.8	2843	1052	1.84
T9	0.2	4121	699	1.43
	0.4	4019	745	1.52
	0.6	3934	790	1.61
	0.8	3830	833	1.70
	1	3697	876	1.79
	1.2	3617	918	1.87
	1.4	3527	959	1.96
	1.6	3408	1002	2.05
	1.8	3262	1048	2.14
T10	0.2	4262	718	1.56
	0.4	4164	761	1.66
	0.6	4060	805	1.75
	0.8	3966	851	1.85
	1	3864	891	1.94
	1.2	3773	932	2.03
	1.4	3687	973	2.12
	1.6	3576	1012	2.20
	1.8	3463	1055	2.30

Horizontal Flow				
Speed Tap	ESP	CFM	RPM	BHP
T6	0.2	3460	659	1.01
	0.4	3343	705	1.08
	0.6	3244	752	1.15
	0.8	3154	60	0.09
	1	3043	839	1.29
	1.2	2940	890	1.37
	1.4	2812	947	1.45
	1.6	2695	989	1.52
	1.8	-	-	-
T7	0.2	3626	683	1.16
	0.4	3532	728	1.24
	0.6	3431	771	1.31
	0.8	3344	815	1.39
	1	3245	858	1.46
	1.2	3125	905	1.54
	1.4	3029	955	1.63
	1.6	2887	1011	1.72
	1.8	2690	1075	1.83
T8	0.2	3711	687	1.20
	0.4	3608	730	1.27
	0.6	3517	772	1.35
	0.8	3434	816	1.42
	1	3334	856	1.49
	1.2	3231	900	1.57
	1.4	3125	951	1.66
	1.6	2986	1001	1.75
	1.8	2885	1041	1.82
T9	0.2	3989	718	1.47
	0.4	3894	761	1.55
	0.6	3816	803	1.64
	0.8	3722	843	1.72
	1	3602	883	1.80
	1.2	3529	922	1.88
	1.4	3449	961	1.96
	1.6	3343	1001	2.04
	1.8	3215	1044	2.13
T10	0.2	4123	750	1.63
	0.4	4032	790	1.72
	0.6	3944	831	1.81
	0.8	3866	868	1.89
	1	3774	905	1.97
	1.2	3690	943	2.05
	1.4	3612	980	2.13
	1.6	3506	943	2.05
	1.8	3401	1068	2.32

Shaded speed tap - Airflow for supplimental heat
.** (T1) and (T2) are part load only

10.0 Ton HP Data • Models: DSH1203D, DSH1204D, DSH1207D

Down Flow				
Speed Tap	ESP	CFM	RPM	BHP
T1**	0.2	2356	466	0.30
	0.4	2189	549	0.36
	0.6	-	-	-
	0.8	-	-	-
T2**	0.2	3026	543	0.56
	0.4	2875	608	0.63
	0.6	2733	670	0.70
	0.8	2346	778	0.81
T3	0.2	4008	649	1.16
	0.4	3879	704	1.26
	0.6	3759	758	1.35
	0.8	3664	807	1.44
T4	0.2	4152	693	1.33
	0.4	4056	746	1.44
	0.6	3940	793	1.53
	0.8	3821	846	1.63
T5	0.2	4430	697	1.49
	0.4	4314	746	1.60
	0.6	4171	794	1.70
	0.8	4054	842	1.80
T6	0.2	3203	555	0.64
	0.4	-	-	-
	0.6	-	-	-
	0.8	-	-	-
T7	0.2	3490	588	0.79
	0.4	3331	645	0.87
	0.6	3211	704	0.95
	0.8	-	-	-
T8	0.2	3656	606	0.88
	0.4	3519	664	0.96
	0.6	3388	721	1.04
	0.8	3200	773	1.12
T9	0.2	4152	693	1.33
	0.4	4056	746	1.44
	0.6	3940	793	1.53
	0.8	3821	846	1.63
T10	0.2	4430	697	1.49
	0.4	4314	746	1.60
	0.6	4171	794	1.70
	0.8	4054	842	1.80

Horizontal Flow				
Speed Tap	ESP	CFM	RPM	BHP
T1**	0.2	2308	469	0.30
	0.4	1969	586	0.38
	0.6	-	-	-
	0.8	-	-	-
T2**	0.2	2962	549	0.57
	0.4	2819	612	0.64
	0.6	2673	671	0.70
	0.8	2301	772	0.80
T3	0.2	3897	669	1.20
	0.4	3800	718	1.28
	0.6	3694	765	1.37
	0.8	3588	814	1.45
T4	0.2	4102	684	1.32
	0.4	4015	735	1.41
	0.6	3911	778	1.50
	0.8	3804	826	1.59
T5	0.2	4287	716	1.54
	0.4	4193	760	1.63
	0.6	4097	808	1.73
	0.8	3995	849	1.82
T6	0.2	3154	572	0.66
	0.4	-	-	-
	0.6	-	-	-
	0.8	-	-	-
T7	0.2	3405	604	0.81
	0.4	3281	660	0.89
	0.6	3150	720	0.97
	0.8	-	-	-
T8	0.2	3535	621	0.90
	0.4	3417	676	0.98
	0.6	3299	730	1.06
	0.8	3161	791	1.14
T9	0.2	4102	684	1.32
	0.4	4015	735	1.41
	0.6	3911	778	1.50
	0.8	3804	826	1.59
T10	0.2	4287	716	1.54
	0.4	4193	760	1.63
	0.6	4097	808	1.73
	0.8	3995	849	1.82

Shaded speed tap - Airflow for supplimental heat
.** (T1) and (T2) are part load only

10.0 Ton Fan Data • DSH1203L, DSH1204L, DSH1207L

Down Flow				
Speed Tap	ESP	CFM	RPM	BHP
T1**	0.2	2452	481	0.35
	0.4	2285	561	0.40
	0.6	-	-	-
	0.8	-	-	-
	1	-	-	-
	1.2	-	-	-
	1.4	-	-	-
T2**	0.2	2620	496	0.39
	0.4	2455	571	0.45
	0.6	2061	685	0.54
	0.8	-	-	-
	1	-	-	-
	1.2	-	-	-
	1.4	-	-	-
T3	0.2	4315	689	1.41
	0.4	4156	736	1.51
	0.6	4047	787	1.61
	0.8	3941	838	1.72
	1	3828	881	1.81
	1.2	3710	929	1.91
	1.4	3369	1029	2.11
T4	0.2	4501	714	1.61
	0.4	4393	759	1.71
	0.6	4279	809	1.82
	0.8	4142	857	1.93
	1	4037	900	2.03
	1.2	3930	945	2.13
	1.4	3786	995	2.24
T5	0.2	4687	732	1.78
	0.4	4584	777	1.89
	0.6	4466	825	2.00
	0.8	4361	872	2.12
	1	4246	916	2.22
	1.2	4120	957	2.32
	1.4	3996	1000	2.43
T6	0.2	3842	643	1.08
	0.4	3712	697	1.17
	0.6	3600	751	1.26
	0.8	3477	800	1.34
	1	3353	855	1.44
	1.2	-	-	-
	1.4	-	-	-
T7	0.2	4125	675	1.30
	0.4	4012	725	1.40
	0.6	3896	776	1.49
	0.8	3789	826	1.59
	1	3679	873	1.68
	1.2	3519	928	1.79
	1.4	3146	1027	1.98
T8	0.2	4315	689	1.41
	0.4	4156	736	1.51
	0.6	4047	787	1.61
	0.8	3941	838	1.72
	1	3828	881	1.81
	1.2	3710	929	1.91
	1.4	3369	1029	2.11
T9	0.2	4501	714	1.61
	0.4	4393	759	1.71
	0.6	4279	809	1.82
	0.8	4142	857	1.93
	1	4037	900	2.03
	1.2	3930	945	2.13
	1.4	3786	995	2.24
T10	0.2	4687	732	1.78
	0.4	4584	777	1.89
	0.6	4466	825	2.00
	0.8	4361	872	2.12
	1	4246	916	2.22
	1.2	4120	957	2.32
	1.4	3996	1000	2.43

Horizontal Flow				
Speed Tap	ESP	CFM	RPM	BHP
T1**	0.2	2457	493	0.35
	0.4	2301	571	0.41
	0.6	-	-	-
	0.8	-	-	-
	1	-	-	-
	1.2	-	-	-
	1.4	-	-	-
T2**	0.2	2577	597	0.47
	0.4	2435	650	0.51
	0.6	2053	735	0.58
	0.8	-	-	-
	1	-	-	-
	1.2	-	-	-
	1.4	-	-	-
T3	0.2	4277	696	1.43
	0.4	4174	739	1.51
	0.6	4076	785	1.61
	0.8	3970	831	1.71
	1	3822	888	1.82
	1.2	3702	938	1.92
	1.4	3427	1019	2.09
T4	0.2	4477	719	1.62
	0.4	4373	763	1.72
	0.6	4276	808	1.82
	0.8	4180	853	1.92
	1	4049	901	2.03
	1.2	3933	950	2.14
	1.4	3791	1001	2.25
T5	0.2	4669	749	1.82
	0.4	4559	794	1.93
	0.6	4466	836	2.03
	0.8	4372	876	2.13
	1	4226	924	2.24
	1.2	4126	970	2.35
	1.4	4002	1010	2.45
T6	0.2	3831	654	1.10
	0.4	3730	703	1.18
	0.6	3626	751	1.26
	0.8	3503	803	1.35
	1	3377	859	1.44
	1.2	-	-	-
	1.4	-	-	-
T7	0.2	4102	684	1.32
	0.4	4015	735	1.41
	0.6	3911	778	1.50
	0.8	3804	826	1.59
	1	3700	875	1.68
	1.2	3540	933	1.80
	1.4	3162	1028	1.98
T8	0.2	4277	696	1.43
	0.4	4174	739	1.51
	0.6	4076	785	1.61
	0.8	3970	831	1.71
	1	3822	888	1.82
	1.2	3702	938	1.92
	1.4	3427	1019	2.09
T9	0.2	4477	719	1.62
	0.4	4373	763	1.72
	0.6	4276	808	1.82
	0.8	4180	853	1.92
	1	4049	901	2.03
	1.2	3933	950	2.14
	1.4	3791	1001	2.25
T10	0.2	4669	749	1.82
	0.4	4559	794	1.93
	0.6	4466	836	2.03
	0.8	4372	876	2.13
	1	4226	924	2.24
	1.2	4126	970	2.35
	1.4	4002	1010	2.45

Shaded speed tap - Airflow for supplimental heat
.** (T1) and (T2) are part load only

10.0 Ton Fan Data • Models: DSH1203W, DSH1204W, DSH1207W

Down Flow				
Speed Tap	ESP	CFM	RPM	BHP
T1**	0.2	2682	504	0.45
	0.4	2553	577	0.51
	0.6	2181	691	0.61
	0.8	-	-	-
	1	-	-	-
	1.2	-	-	-
	1.4	-	-	-
	1.6	-	-	-
	1.8	-	-	-
T2**	0.2	2778	514	0.47
	0.4	2633	583	0.53
	0.6	2246	698	0.64
	0.8	2046	751	0.68
	1	-	-	-
	1.2	-	-	-
	1.4	-	-	-
	1.6	-	-	-
	1.8	-	-	-
T3	0.2	4809	751	1.68
	0.4	4693	797	1.78
	0.6	4579	840	1.88
	0.8	4480	883	1.97
	1	4374	920	2.05
	1.2	4234	962	2.15
	1.4	4107	1004	2.24
	1.6	3846	1086	2.43
	1.8	3558	1151	2.57
T4	0.2	4992	772	1.85
	0.4	4885	818	1.96
	0.6	4765	857	2.05
	0.8	4663	900	2.16
	1	4556	937	2.25
	1.2	4463	977	2.34
	1.4	4340	1016	2.44
	1.6	4146	1076	2.58
	1.8	3833	1159	2.78
T5	0.2	5194	643	1.64
	0.4	5093	676	1.72
	0.6	4988	710	1.81
	0.8	4867	749	1.91
	1	4769	781	1.99
	1.2	4659	816	2.08
	1.4	4543	854	2.18
	1.6	4477	875	2.23
	1.8	4050	997	2.54

Horizontal Flow				
Speed Tap	ESP	CFM	RPM	BHP
T1**	0.2	2701	550	0.49
	0.4	2631	586	0.52
	0.6	2304	701	0.62
	0.8	2163	750	0.66
	1	-	-	-
	1.2	-	-	-
	1.4	-	-	-
	1.6	-	-	-
	1.8	-	-	-
T2**	0.2	2827	532	0.48
	0.4	2693	594	0.54
	0.6	2355	705	0.64
	0.8	2193	759	0.69
	1	2068	806	0.73
	1.2	-	-	-
	1.4	-	-	-
	1.6	-	-	-
	1.8	-	-	-
T3	0.2	4683	789	1.76
	0.4	4593	814	1.82
	0.6	4497	855	1.91
	0.8	4388	894	2.00
	1	4297	932	2.08
	1.2	4167	972	2.17
	1.4	4085	1004	2.24
	1.6	3836	1089	2.43
	1.8	3553	1153	2.58
T4	0.2	4878	798	1.91
	0.4	4779	837	2.01
	0.6	4692	874	2.10
	0.8	4580	912	2.19
	1	4491	951	2.28
	1.2	4379	988	2.37
	1.4	4280	11	0.03
	1.6	4170	1057	2.53
	1.8	3800	1163	2.79
T5	0.2	5040	676	1.72
	0.4	4950	706	1.80
	0.6	4855	738	1.88
	0.8	4746	774	1.97
	1	4657	803	2.05
	1.2	4559	836	2.13
	1.4	4454	871	2.22
	1.6	4394	891	2.27
	1.8	4055	1004	2.56

10.0 Ton Fan Data • Models: DSH1203W, DSH1204W, DSH1207W

Down Flow				
Speed Tap	ESP	CFM	RPM	BHP
T6	0.2	4525	714	1.41
	0.4	4413	760	1.50
	0.6	4282	807	1.60
	0.8	4143	853	1.69
	1	4039	894	1.77
	1.2	3913	936	1.85
	1.4	3688	1013	2.00
	1.6	3352	1089	2.15
	1.8	3210	1126	2.23
T7	0.2	4654	732	1.53
	0.4	4529	777	1.62
	0.6	4414	823	1.72
	0.8	4299	864	1.81
	1	4170	907	1.89
	1.2	4063	949	1.98
	1.4	3869	1012	2.12
	1.6	3543	1093	2.28
	1.8	3369	1139	2.38
T8	0.2	4809	751	1.68
	0.4	4693	797	1.78
	0.6	4579	840	1.88
	0.8	4480	883	1.97
	1	4374	920	2.05
	1.2	4234	962	2.15
	1.4	4107	1004	2.24
	1.6	3846	1086	2.43
	1.8	3558	1151	2.57
T9	0.2	4992	772	1.85
	0.4	4885	818	1.96
	0.6	4765	857	2.05
	0.8	4663	900	2.16
	1	4556	937	2.25
	1.2	4463	977	2.34
	1.4	4340	1016	2.44
	1.6	4146	1076	2.58
	1.8	3833	1159	2.78
T10	0.2	5194	643	1.64
	0.4	5093	676	1.72
	0.6	4988	710	1.81
	0.8	4867	749	1.91
	1	4769	781	1.99
	1.2	4659	816	2.08
	1.4	4543	854	2.18
	1.6	4477	875	2.23
	1.8	4050	997	2.54

Horizontal Flow				
Speed Tap	ESP	CFM	RPM	BHP
T6	0.2	4277	729	1.44
	0.4	4146	775	1.53
	0.6	4035	822	1.62
	0.8	3923	865	1.71
	1	3810	913	1.80
	1.2	3657	965	1.91
	1.4	3353	1048	2.07
	1.6	3157	1098	2.17
	1.8	3024	1130	2.23
T7	0.2	4391	746	1.56
	0.4	4255	791	1.65
	0.6	4158	836	1.75
	0.8	4045	879	1.84
	1	3927	923	1.93
	1.2	3797	976	2.04
	1.4	3597	1035	2.16
	1.6	3287	1110	2.32
	1.8	3155	1146	2.40
T8	0.2	4683	789	1.76
	0.4	4593	814	1.82
	0.6	4497	855	1.91
	0.8	4388	894	2.00
	1	4297	932	2.08
	1.2	4167	972	2.17
	1.4	4085	1004	2.24
	1.6	3836	1089	2.43
	1.8	3553	1153	2.58
T9	0.2	4878	798	1.91
	0.4	4779	837	2.01
	0.6	4692	874	2.10
	0.8	4580	912	2.19
	1	4491	951	2.28
	1.2	44	988	2.37
	1.4	4280	11	0.03
	1.6	4170	1057	2.53
	1.8	3800	1163	2.79
T10	0.2	5040	676	1.72
	0.4	4950	706	1.80
	0.6	4855	738	1.88
	0.8	4746	774	1.97
	1	4657	803	2.05
	1.2	4559	836	2.13
	1.4	4454	871	2.22
	1.6	4394	891	2.27
	1.8	4055	1004	2.56

Shaded speed tap - Airflow for supplimental heat
.** (T1) and (T2) are part load only

Static Pressure

7.5-10 TONS		
DOWNFLOW ECONOMIZER PRESSURE DROP		
Cabinet	CFM	SP in. wg.
7.5 Ton	2250	.04"
	3000	.07"
	3750	.11"
8.5 Ton	2550	.06"
	3400	.10"
	4250	.16"
10 Ton	3000	.08"
	4000	.13"
	5000	.22"

7.5-10 TONS		
HORIZONTAL ECONOMIZER PRESSURE DROP		
Cabinet	CFM	SP in. wg.
7.5 Ton	2250	.05"
	3000	.07"
	3750	.13"
8.5 Ton	2550	.07"
	3400	.13"
	4250	.18"
10 Ton	3000	.07"
	4000	.12"
	5000	.19"

Heating Data

DSH090 **100 % Capacity**

	OUTDOOR AMBIENT TEMPERATURE																
	65	60	55	50	47	45	40	35	30	25	20	17	15	10	5	0	-5
MBh	109.62	102.73	95.95	89.28	85.00	81.90	73.94	66.54	60.49	56.03	52.76	51.00	48.73	43.07	37.40	31.73	26.07
T/R	32.53	30.78	29.03	27.29	26.50	25.28	22.82	20.54	18.67	17.29	16.28	15.74	15.04	13.29	11.54	9.79	8.04
KW	7.74	7.62	7.51	7.40	7.08	7.28	7.17	7.05	6.94	6.83	6.71	6.64	6.60	6.48	6.37	6.26	6.14
AMPS	30.5	30.0	29.5	29.1	27.7	28.6	28.1	27.6	27.1	26.6	26.1	25.8	25.6	25.1	24.6	24.1	23.6
COP	4.15	3.95	3.74	3.54	3.40	3.30	3.02	2.76	2.55	2.41	2.30	2.25	2.16	1.95	1.72	1.49	1.24
Hi PR	382	369	357	344	337	332	320	307	295	282	270	263	258	245	233	220	208
LO PR	137	128	120	111	106	103	94	86	77	69	60	55	52	43	35	26	18

DSH102 **100 % Capacity**

	OUTDOOR AMBIENT TEMPERATURE																
	65	60	55	50	47	45	40	35	30	25	20	17	15	10	5	0	-5
MBh	128.34	120.41	112.61	104.94	100.00	96.43	87.35	78.84	71.87	66.75	63.01	61.00	58.40	51.90	45.40	38.90	32.40
T/R	38.09	36.08	34.08	32.07	30.87	29.77	26.96	24.33	22.18	20.60	19.45	18.83	18.02	16.02	14.01	12.01	10.00
KW	9.02	8.91	8.80	8.69	8.62	8.58	8.46	8.35	8.24	8.13	8.01	7.95	7.90	7.79	7.68	7.56	7.45
AMPS	35.4	34.9	34.5	34.0	33.7	33.5	33.0	32.5	32.0	31.5	31.0	30.7	30.6	30.1	29.6	29.1	28.6
COP	4.17	3.96	3.75	3.54	3.40	3.30	3.03	2.77	2.56	2.41	2.30	2.25	2.17	1.95	1.73	1.51	1.27
Hi PR	390	377	364	352	344	339	326	314	301	288	276	268	263	250	238	225	212
LO PR	131	123	115	107	102	99	91	82	74	66	58	53	50	41	33	25	17

DSH120 **100 % Capacity**

	OUTDOOR AMBIENT TEMPERATURE																
	65	60	55	50	47	45	40	35	30	25	20	17	15	10	5	0	-5
MBh	152.46	142.24	132.19	122.31	116.00	111.23	99.23	88.27	79.34	72.67	67.68	65.00	61.60	53.10	44.60	36.10	27.60
T/R	35.26	33.22	31.17	29.13	27.90	26.75	23.87	21.23	19.08	17.48	16.28	15.63	14.81	12.77	10.73	8.68	6.64
KW	10.92	10.66	10.41	10.15	10.00	9.90	9.64	9.39	9.13	8.88	8.62	8.47	8.36	8.11	7.85	7.60	7.34
AMPS	41.0	39.9	38.8	37.6	37.0	36.5	35.4	34.3	33.2	32.1	31.0	30.3	29.9	28.8	27.6	26.5	25.4
COP	4.09	3.91	3.72	3.53	3.40	3.29	3.02	2.76	2.55	2.40	2.30	2.25	2.16	1.92	1.66	1.39	1.10
Hi PR	391	378	365	353	345	340	327	314	302	289	276	269	264	251	238	226	213
LO PR	139	131	122	113	108	105	96	87	79	70	61	56	53	44	35	27	18

Calculations are based on nominal CFM and 70 °F indoor dry bulb.

Amps = Outdoor unit amps (comp.+fan)

Note: Shaded area is AHRI Rating Conditions at 47°F outdoor ambient temperature

kW = Total system power

Electrical Data

Model Number	Electrical Rating	Compressor			Outdoor Fan Motor			Indoor Fan Motor			Optional Electric Heat			Optional Powered Convienience Outlet	Optional Power Exhaust	Power Supply	
		QTY	RLA	LRA	QTY	HP	FLA	QTY	HP	FLA	PART #	KW*	FLA	FLA	FLA	MCA	MOP
DSH0903D	208/230/3/60	2	12.2	120	2	0.33	2.0	1	2.4	8.0	-	-	-	-	-	39.4/39.4	50/50
											-	-	-	9.6/8.7	-	49.0/48.1	60/60
											-	-	-	-	3.3/3.0 (2.4)	42.7/42.4	50/50
											-	-	-	9.6/8.7	3.3/3.0 (2.4)	52.3/51.1	60/60
											EH*D-3M15	11.3/15.0	31.3/36.1	-	-	78.5/84.5	80/90
														9.6/8.7	-	88.1/93.2	90/100
														-	3.3/3.0 (2.4)	81.8/87.5	90/90
														9.6/8.7	3.3/3.0 (2.4)	91.4/96.2	100/100
											EH*D-3M30	22.5/30.0	62.5/72.2	-	-	118/130	125/150
														9.6/8.7	-	127/138	150/150
														-	3.3/3.0 (2.4)	121/133	125/150
														9.6/8.7	3.3/3.0 (2.4)	130/141	150/150
											EH*D-3M45	33.8/45.0	93.8/108	-	-	157/175	175/175
														9.6/8.7	-	166/183	175/200
														-	3.3/3.0 (2.4)	160/178	175/200
														9.6/8.7	3.3/3.0 (2.4)	170/186	175/200
DSH0903L	208/230/3/60	2	12.2	120	2	0.33	2.0	1	2.4	8.0	-	-	-	-	-	39.4/39.4	50/50
											-	-	-	9.6/8.7	-	49.0/48.1	60/60
											-	-	-	-	3.3/3.0 (2.4)	42.7/42.4	50/50
											-	-	-	9.6/8.7	3.3/3.0 (2.4)	52.3/51.1	60/60
											EH*D-3M15	11.3/15.0	31.3/36.1	-	-	78.5/84.5	80/90
														9.6/8.7	-	88.1/93.2	90/100
														-	3.3/3.0 (2.4)	81.8/87.5	90/90
														9.6/8.7	3.3/3.0 (2.4)	91.4/96.2	100/100
											EH*D-3M30	22.5/30.0	62.5/72.2	-	-	118/130	125/150
														9.6/8.7	-	127/138	150/150
														-	3.3/3.0 (2.4)	121/133	125/150
														9.6/8.7	3.3/3.0 (2.4)	130/141	150/150
											EH*D-3M45	33.8/45.0	93.8/108	-	-	157/175	175/175
														9.6/8.7	-	166/183	175/200
														-	3.3/3.0 (2.4)	160/178	175/200
														9.6/8.7	3.3/3.0 (2.4)	170/186	175/200
DSH0903W	208/230/3/60	2	12.2	120	2	0.33	2.0	1	3.5	10.9	-	-	-	-	-	42.3/42.3	50/50
											-	-	-	9.6/8.7	-	51.9/51.0	60/60
											-	-	-	-	3.3/3.0 (2.4)	45.6/45.3	50/50
											-	-	-	9.6/8.7	3.3/3.0 (2.4)	55.2/54.0	60/60
											EH*D-3M15	11.3/15.0	31.3/36.1	-	-	81.4/87.4	90/90
														9.6/8.7	-	91.0/96.1	100/100
														-	3.3/3.0 (2.4)	84.7/90.4	90/100
														9.6/8.7	3.3/3.0 (2.4)	94.3/99.1	100/100
											EH*D-3M30	22.5/30.0	62.5/72.2	-	-	120/132	125/150
														9.6/8.7	-	130/141	150/150
														-	3.3/3.0 (2.4)	124/135	125/150
														9.6/8.7	3.3/3.0 (2.4)	133/144	150/150
											EH*D-3M45	33.8/45.0	93.8/108	-	-	160/178	175/200
														9.6/8.7	-	169/186	175/200
														-	3.3/3.0 (2.4)	163/181	175/200
														9.6/8.7	3.3/3.0 (2.4)	172/189	175/200
DSH0904D	460/3/60	2	5.8	55.1	2	0.33	0.85	1	2.4	5.4	-	-	-	-	-	20.1	25
											-	-	-	4.3	-	24.4	30
											-	-	-	-	1.2 (1.0)	21.3	25
											-	-	-	4.3	1.2 (1.0)	25.6	30
											EH*D-4M15	15.0	18.0	-	-	42.6	45
														4.3	-	46.9	50
														-	1.2 (1.0)	43.8	45
														4.3	1.2 (1.0)	48.1	50
											EH*D-4M30	30.0	36.1	-	-	65.2	70
														4.3	-	69.5	70
														-	1.2 (1.0)	66.4	70
														4.3	1.2 (1.0)	70.7	80
											EH*D-4M45	45.0	54.1	-	-	87.7	90
														4.3	-	92.0	100
														-	1.2 (1.0)	88.9	90
														4.3	1.2 (1.0)	93.2	100

Electrical Data

Model Number	Electrical Rating	Compressor			Outdoor Fan Motor			Indoor Fan Motor			Optional Electric Heat			Optional Powered Convienience Outlet	Optional Power Exhaust	Power Supply	
		QTY	RLA	LRA	QTY	HP	FLA	QTY	HP	FLA	PART #	KW*	FLA	FLA	FLA	MCA	MOP
DSH0904L	460/3/60	2	5.8	55.1	2	0.33	0.85	1	2.4	5.4	-	-	-	-	-	20.1	25
											-	-	-	4.3	-	24.4	30
											-	-	-	-	1.2 (1.0)	21.3	25
											-	-	-	4.3	1.2 (1.0)	25.6	30
											EH*D-4M15	15.0	18.0	-	-	42.6	45
														4.3	-	46.9	50
														-	1.2 (1.0)	43.8	45
														4.3	1.2 (1.0)	48.1	50
											EH*D-4M30	30.0	36.1	-	-	65.2	70
														4.3	-	69.5	70
														-	1.2 (1.0)	66.4	70
														4.3	1.2 (1.0)	70.7	80
											EH*D-4M45	45.0	54.1	-	-	87.7	90
														4.3	-	92.0	100
														-	1.2 (1.0)	88.9	90
														4.3	1.2 (1.0)	93.2	100
DSH0904W	460/3/60	2	5.8	55.1	2	0.33	0.85	1	3.5	7.2	-	-	-	-	-	21.9	25
											-	-	-	4.3	-	26.2	30
											-	-	-	-	1.2 (1.0)	23.1	30
											-	-	-	4.3	1.2 (1.0)	27.4	30
											EH*D-4M15	15.0	18.0	-	-	44.4	45
														4.3	-	48.7	50
														-	1.2 (1.0)	45.6	50
														4.3	1.2 (1.0)	49.9	50
											EH*D-4M30	30.0	36.1	-	-	67.0	70
														4.3	-	71.3	80
														-	1.2 (1.0)	68.2	70
														4.3	1.2 (1.0)	72.5	80
											EH*D-4M45	45.0	54.1	-	-	89.5	90
														4.3	-	93.8	100
														-	1.2 (1.0)	90.7	100
														4.3	1.2 (1.0)	95.0	100
DSH0907D	575/3/60	2	5.8	41.0	2	0.33	0.67	1	2.4	4.0	-	-	-	-	-	18.3	20
											-	-	-	3.5	-	21.8	25
											-	-	-	-	1.3	19.6	25
											-	-	-	3.5	1.3	23.1	25
											EH*D-7M15	15.0	14.4	-	-	36.3	40
														3.5	-	39.8	40
														-	1.3	37.6	40
														3.5	1.3	41.1	45
											EH*D-7M30	30.0	28.9	-	-	54.4	60
														3.5	-	57.9	60
														-	1.3	55.7	60
														3.5	1.3	59.2	60
											EH*D-7M45	45.0	43.3	-	-	72.4	80
														3.5	-	75.9	80
														-	1.3	73.7	80
														3.5	1.3	77.2	80
DSH0907L	575/3/60	2	5.8	41.0	2	0.33	0.67	1	2.4	4.0	-	-	-	-	-	18.3	20
											-	-	-	3.5	-	21.8	25
											-	-	-	-	1.3	19.6	25
											-	-	-	3.5	1.3	23.1	25
											EH*D-7M15	15.0	14.4	-	-	36.3	40
														3.5	-	39.8	40
														-	1.3	37.6	40
														3.5	1.3	41.1	45
											EH*D-7M30	30.0	28.9	-	-	54.4	60
														3.5	-	57.9	60
														-	1.3	55.7	60
														3.5	1.3	59.2	60
											EH*D-7M45	45.0	43.3	-	-	72.4	80
														3.5	-	75.9	80
														-	1.3	73.7	80
														3.5	1.3	77.2	80

Electrical Data

Model Number	Electrical Rating	Compressor			Outdoor Fan Motor			Indoor Fan Motor			Optional Electric Heat			Optional Powered Convienience Outlet	Optional Power Exhaust	Power Supply	
		QTY	RLA	LRA	QTY	HP	FLA	QTY	HP	FLA	PART #	KW*	FLA	FLA	FLA	MCA	MOP
DSH0907W	575/3/60	2	5.8	41.0	2	0.33	0.67	1	3.5	5.0	-	-	-	-	-	19.3	25
											-	-	-	3.5	-	22.8	25
											-	-	-	-	1.3	20.6	25
											-	-	-	3.5	1.3	24.1	25
											EH*D-7M15	15.0	14.4	-	-	37.3	40
														3.5	-	40.8	45
														-	1.3	38.6	40
														3.5	1.3	42.1	45
											EH*D-7M30	30.0	28.9	-	-	55.4	60
														3.5	-	58.9	60
														-	1.3	56.7	60
														3.5	1.3	60.2	70
											EH*D-7M45	45.0	43.3	-	-	73.4	80
														3.5	-	76.9	80
														-	1.3	74.7	80
														3.5	1.3	78.2	80
DSH1023D	208/230/3/60	2	14.1	120	2	0.33	2.0	1	2.4	8.0	-	-	-	-	-	43.7/43.7	50/50
											-	-	-	9.6/8.7	-	53.3/52.4	60/60
											-	-	-	-	3.3/3.0 (2.4)	47.0/46.7	60/60
											-	-	-	9.6/8.7	3.3/3.0 (2.4)	56.6/55.4	60/60
											EH*D-3M15	11.3/15.0	31.3/36.1	-	-	82.8/88.8	90/90
														9.6/8.7	-	92.4/97.5	100/100
														-	3.3/3.0 (2.4)	86.1/91.8	90/100
														9.6/8.7	3.3/3.0 (2.4)	95.7/100	100/110
											EH*D-3M30	22.5/30.0	62.5/72.2	-	-	122/134	125/150
														9.6/8.7	-	131/143	150/150
														-	3.3/3.0 (2.4)	125/137	150/150
														9.6/8.7	3.3/3.0 (2.4)	135/146	150/150
											EH*D-3M45	33.8/45.0	93.8/108	-	-	161/179	175/200
														9.6/8.7	-	171/188	175/200
														-	3.3/3.0 (2.4)	164/182	175/200
														9.6/8.7	3.3/3.0 (2.4)	174/191	175/200
DSH1023L	208/230/3/60	2	14.1	120	2	0.33	2.0	1	2.4	8.0	-	-	-	-	-	43.7/43.7	50/50
											-	-	-	9.6/8.7	-	53.3/52.4	60/60
											-	-	-	-	3.3/3.0 (2.4)	47.0/46.7	60/60
											-	-	-	9.6/8.7	3.3/3.0 (2.4)	56.6/55.4	60/60
											EH*D-3M15	11.3/15.0	31.3/36.1	-	-	82.8/88.8	90/90
														9.6/8.7	-	92.4/97.5	100/100
														-	3.3/3.0 (2.4)	86.1/91.8	90/100
														9.6/8.7	3.3/3.0 (2.4)	95.7/100	100/110
											EH*D-3M30	22.5/30.0	62.5/72.2	-	-	122/134	125/150
														9.6/8.7	-	131/143	150/150
														-	3.3/3.0 (2.4)	125/137	150/150
														9.6/8.7	3.3/3.0 (2.4)	135/146	150/150
											EH*D-3M45	33.8/45.0	93.8/108	-	-	161/179	175/200
														9.6/8.7	-	171/188	175/200
														-	3.3/3.0 (2.4)	164/182	175/200
														9.6/8.7	3.3/3.0 (2.4)	174/191	175/200
DSH1023W	208/230/3/60	2	14.1	120	2	0.33	2.0	1	3.5	10.9	-	-	-	-	-	46.6/46.6	60/60
											-	-	-	9.6/8.7	-	56.2/55.3	70/60
											-	-	-	-	3.3/3.0 (2.4)	49.9/49.6	60/60
											-	-	-	9.6/8.7	3.3/3.0 (2.4)	59.5/58.3	70/70
											EH*D-3M15	11.3/15.0	31.3/36.1	-	-	85.7/91.7	90/100
														9.6/8.7	-	95.3/100	100/110
														-	3.3/3.0 (2.4)	89.0/94.7	90/100
														9.6/8.7	3.3/3.0 (2.4)	98.6/103	100/110
											EH*D-3M30	22.5/30.0	62.5/72.2	-	-	125/137	125/150
														9.6/8.7	-	134/145	150/150
														-	3.3/3.0 (2.4)	128/140	150/150
														9.6/8.7	3.3/3.0 (2.4)	138/148	150/150
											EH*D-3M45	33.8/45.0	93.8/108	-	-	164/182	175/200
														9.6/8.7	-	173/191	175/200
														-	3.3/3.0 (2.4)	167/185	175/200
														9.6/8.7	3.3/3.0 (2.4)	177/194	200/200

Electrical Data

Model Number	Electrical Rating	Compressor			Outdoor Fan Motor			Indoor Fan Motor			Optional Electric Heat			Optional Powered Convienience Outlet	Optional Power Exhaust	Power Supply	
		QTY	RLA	LRA	QTY	HP	FLA	QTY	HP	FLA	PART #	KW*	FLA	FLA	FLA	MCA	MOP
DSH1024D	460/3/60	2	6.4	55.1	2	0.33	0.85	1	2.4	5.4	-	-	-	-	-	21.5	25
											-	-	-	4.3	-	25.8	30
											-	-	-	-	1.2 (1.0)	22.7	25
											-	-	-	4.3	1.2 (1.0)	27.0	30
											EH*D-4M15	15.0	18.0	-	-	44.1	45
														4.3	-	48.4	50
														-	1.2 (1.0)	45.3	50
														4.3	1.2 (1.0)	49.6	50
											EH*D-4M30	30.0	36.1	-	-	66.6	70
														4.3	-	70.9	80
														-	1.2 (1.0)	67.8	70
														4.3	1.2 (1.0)	72.1	80
											EH*D-4M45	45.0	54.1	-	-	89.2	90
														4.3	-	93.5	100
														-	1.2 (1.0)	90.4	100
														4.3	1.2 (1.0)	94.7	100
DSH1024L	460/3/60	2	6.4	55.1	2	0.33	0.85	1	2.4	5.4	-	-	-	-	-	21.5	25
											-	-	-	4.3	-	25.8	30
											-	-	-	-	1.2 (1.0)	22.7	25
											-	-	-	4.3	1.2 (1.0)	27.0	30
											EH*D-4M15	15.0	18.0	-	-	44.1	45
														4.3	-	48.4	50
														-	1.2 (1.0)	45.3	50
														4.3	1.2 (1.0)	49.6	50
											EH*D-4M30	30.0	36.1	-	-	66.6	70
														4.3	-	70.9	80
														-	1.2 (1.0)	67.8	70
														4.3	1.2 (1.0)	72.1	80
											EH*D-4M45	45.0	54.1	-	-	89.2	90
														4.3	-	93.5	100
														-	1.2 (1.0)	90.4	100
														4.3	1.2 (1.0)	94.7	100
DSH1024W	460/3/60	2	6.4	55.1	2	0.33	0.85	1	3.5	7.2	-	-	-	-	-	23.3	30
											-	-	-	4.3	-	27.6	35
											-	-	-	-	1.2 (1.0)	24.5	30
											-	-	-	4.3	1.2 (1.0)	28.8	35
											EH*D-4M15	15.0	18.0	-	-	45.9	50
														4.3	-	50.2	60
														-	1.2 (1.0)	47.1	50
														4.3	1.2 (1.0)	51.4	60
											EH*D-4M30	30.0	36.1	-	-	68.4	70
														4.3	-	72.7	80
														-	1.2 (1.0)	69.6	70
														4.3	1.2 (1.0)	73.9	80
											EH*D-4M45	45.0	54.1	-	-	91.0	100
														4.3	-	95.3	100
														-	1.2 (1.0)	92.2	100
														4.3	1.2 (1.0)	96.5	100
DSH1027D	575/3/60	2	5.1	41.0	2	0.33	0.67	1	2.4	4.0	-	-	-	-	-	16.9	20
											-	-	-	3.5	-	20.4	25
											-	-	-	-	1.3	18.2	20
											-	-	-	3.5	1.3	21.7	25
											EH*D-7M15	15.0	14.4	-	-	34.9	35
														3.5	-	38.4	40
														-	1.3	36.2	40
														3.5	1.3	39.7	40
											EH*D-7M30	30.0	28.9	-	-	52.9	60
														3.5	-	56.4	60
														-	1.3	54.2	60
														3.5	1.3	57.7	60
											EH*D-7M45	45.0	43.3	-	-	71.0	80
														3.5	-	74.5	80
														-	1.3	72.3	80
														3.5	1.3	75.8	80

Electrical Data

Model Number	Electrical Rating	Compressor			Outdoor Fan Motor			Indoor Fan Motor			Optional Electric Heat			Optional Powered Convienience Outlet	Optional Power Exhaust	Power Supply	
		QTY	RLA	LRA	QTY	HP	FLA	QTY	HP	FLA	PART #	KW*	FLA	FLA	FLA	MCA	MOP
DSH1027L	575/3/60	2	5.1	41.0	2	0.33	0.67	1	2.4	4.0	-	-	-	-	-	16.9	20
											-	-	-	3.5	-	20.4	25
											-	-	-	-	1.3	18.2	20
											-	-	-	3.5	1.3	21.7	25
											EH*D-7M15	15.0	14.4	-	-	34.9	35
														3.5	-	38.4	40
														-	1.3	36.2	40
														3.5	1.3	39.7	40
											EH*D-7M30	30.0	28.9	-	-	52.9	60
														3.5	-	56.4	60
														-	1.3	54.2	60
														3.5	1.3	57.7	60
											EH*D-7M45	45.0	43.3	-	-	71.0	80
														3.5	-	74.5	80
														-	1.3	72.3	80
														3.5	1.3	75.8	80
DSH1027W	575/3/60	2	5.1	41.0	2	0.33	0.67	1	3.5	5.0	-	-	-	-	-	17.9	20
											-	-	-	3.5	-	21.4	25
											-	-	-	-	1.3	19.2	20
											-	-	-	3.5	1.3	22.7	25
											EH*D-7M15	15.0	14.4	-	-	35.9	40
														3.5	-	39.4	40
														-	1.3	37.2	40
														3.5	1.3	40.7	45
											EH*D-7M30	30.0	28.9	-	-	53.9	60
														3.5	-	57.4	60
														-	1.3	55.2	60
														3.5	1.3	58.7	60
											EH*D-7M45	45.0	43.3	-	-	72.0	80
														3.5	-	75.5	80
														-	1.3	73.3	80
														3.5	1.3	76.8	80
DSH1203D	208/230/3/60	2	17.3	155	2	0.5	2.7	1	3.5	10.9	-	-	-	-	-	55.2/55.2	70/70
											-	-	-	9.6/8.7	-	64.8/63.9	80/80
											-	-	-	-	3.3/3.0 (2.4)	58.5/58.2	70/70
											-	-	-	9.6/8.7	3.3/3.0 (2.4)	68.1/66.9	80/80
											EH*D-3M15	11.3/15.0	31.3/36.1	-	-	94.3/100	100/110
														9.6/8.7	-	104/109	110/110
														-	3.3/3.0 (2.4)	97.6/103	100/110
														9.6/8.7	3.3/3.0 (2.4)	107/112	110/125
											EH*D-3M30	22.5/30.0	62.5/72.2	-	-	133/145	150/150
														9.6/8.7	-	143/154	150/175
														-	3.3/3.0 (2.4)	137/148	150/150
														9.6/8.7	3.3/3.0 (2.4)	146/157	150/175
											EH*D-3M45	33.8/45.0	93.8/108	-	-	172/190	175/200
														9.6/8.7	-	182/199	200/200
														-	3.3/3.0 (2.4)	176/193	200/200
														9.6/8.7	3.3/3.0 (2.4)	185/202	200/225
DSH1203L	208/230/3/60	2	17.3	155	2	0.5	2.7	1	3.5	10.9	-	-	-	-	-	55.2/55.2	70/70
											-	-	-	9.6/8.7	-	64.8/63.9	80/80
											-	-	-	-	3.3/3.0 (2.4)	58.5/58.2	70/70
											-	-	-	9.6/8.7	3.3/3.0 (2.4)	68.1/66.9	80/80
											EH*D-3M15	11.3/15.0	31.3/36.1	-	-	94.3/100	100/110
														9.6/8.7	-	104/109	110/110
														-	3.3/3.0 (2.4)	97.6/103	100/110
														9.6/8.7	3.3/3.0 (2.4)	107/112	110/125
											EH*D-3M30	22.5/30.0	62.5/72.2	-	-	133/145	150/150
														9.6/8.7	-	143/154	150/175
														-	3.3/3.0 (2.4)	137/148	150/150
														9.6/8.7	3.3/3.0 (2.4)	146/157	150/175
											EH*D-3M45	33.8/45.0	93.8/108	-	-	172/190	175/200
														9.6/8.7	-	182/199	200/200
														-	3.3/3.0 (2.4)	176/193	200/200
														9.6/8.7	3.3/3.0 (2.4)	185/202	200/225

Electrical Data

Model Number	Electrical Rating	Compressor			Outdoor Fan Motor			Indoor Fan Motor			Optional Electric Heat			Optional Powered Convienience Outlet	Optional Power Exhaust	Power Supply	
		QTY	RLA	LRA	QTY	HP	FLA	QTY	HP	FLA	PART #	KW*	FLA	FLA	FLA	MCA	MOP
DSH1203W	208/230/3/60	2	17.3	155	2	0.5	2.7	1	5.0	14.5	-	-	-	-	-	58.8/58.8	70/70
											-	-	-	9.6/8.7	-	68.4/67.5	80/80
											-	-	-	-	3.3/3.0 (2.4)	62.1/61.8	70/70
											-	-	-	9.6/8.7	3.3/3.0 (2.4)	71.7/70.5	80/80
											EH*D-3M15	11.3/15.0	31.3/36.1	-	-	97.9/104	100/110
														9.6/8.7	-	107/113	110/125
														-	3.3/3.0 (2.4)	101/107	110/110
														9.6/8.7	3.3/3.0 (2.4)	111/116	125/125
											EH*D-3M30	22.5/30.0	62.5/72.2	-	-	137/149	150/150
														9.6/8.7	-	147/158	150/175
														-	3.3/3.0 (2.4)	140/152	150/175
														9.6/8.7	3.3/3.0 (2.4)	150/161	150/175
											EH*D-3M45	33.8/45.0	93.8/108	-	-	176/194	200/200
														9.6/8.7	-	186/203	200/225
														-	3.3/3.0 (2.4)	179/197	200/200
														9.6/8.7	3.3/3.0 (2.4)	189/206	200/225
DSH1204D	460/3/60	2	7.7	58.1	2	0.5	1.4	1	3.5	7.2	-	-	-	-	-	27.3	30
											-	-	-	4.3	-	31.6	35
											-	-	-	-	1.2 (1.0)	28.5	35
											-	-	-	4.3	1.2 (1.0)	32.8	40
											EH*D-4M15	15.0	18.0	-	-	49.8	50
														4.3	-	54.1	60
														-	1.2 (1.0)	51.0	60
														4.3	1.2 (1.0)	55.3	60
											EH*D-4M30	30.0	36.1	-	-	72.4	80
														4.3	-	76.7	80
														-	1.2 (1.0)	73.6	80
														4.3	1.2 (1.0)	77.9	80
											EH*D-4M45	45.0	54.1	-	-	94.9	100
														4.3	-	99.2	100
														-	1.2 (1.0)	96.1	100
														4.3	1.2 (1.0)	100	110
DSH1204L	460/3/60	2	7.7	58.1	2	0.5	1.4	1	3.5	7.2	-	-	-	-	-	27.3	30
											-	-	-	4.3	-	31.6	35
											-	-	-	-	1.2 (1.0)	28.5	35
											-	-	-	4.3	1.2 (1.0)	32.8	40
											EH*D-4M15	15.0	18.0	-	-	49.8	50
														4.3	-	54.1	60
														-	1.2 (1.0)	51.0	60
														4.3	1.2 (1.0)	55.3	60
											EH*D-4M30	30.0	36.1	-	-	72.4	80
														4.3	-	76.7	80
														-	1.2 (1.0)	73.6	80
														4.3	1.2 (1.0)	77.9	80
											EH*D-4M45	45.0	54.1	-	-	94.9	100
														4.3	-	99.2	100
														-	1.2 (1.0)	96.1	100
														4.3	1.2 (1.0)	100	110
DSH1204W	460/3/60	2	7.7	58.1	2	0.5	1.4	1	5.0	10.6	-	-	-	-	-	30.7	40
											-	-	-	4.3	-	35.0	45
											-	-	-	-	1.2 (1.0)	31.9	40
											-	-	-	4.3	1.2 (1.0)	36.2	45
											EH*D-4M15	15.0	18.0	-	-	53.2	60
														4.3	-	57.5	60
														-	1.2 (1.0)	54.4	60
														4.3	1.2 (1.0)	58.7	60
											EH*D-4M30	30.0	36.1	-	-	75.8	80
														4.3	-	80.1	90
														-	1.2 (1.0)	77.0	80
														4.3	1.2 (1.0)	81.3	90
											EH*D-4M45	45.0	54.1	-	-	98.3	100
														4.3	-	103	110
														-	1.2 (1.0)	99.5	100
														4.3	1.2 (1.0)	104	110

Electrical Data

Model Number	Electrical Rating	Compressor			Outdoor Fan Motor			Indoor Fan Motor			Optional Electric Heat			Optional Powered Convienience Outlet	Optional Power Exhaust	Power Supply	
		QTY	RLA	LRA	QTY	HP	FLA	QTY	HP	FLA	PART #	KW*	FLA	FLA	FLA	MCA	MOP
DSH1207D	575/3/60	2	7.0	47.8	2	0.5	1.0	1	3.5	5.0	-	-	-	-	-	22.8	25
											-	-	-	3.5	-	26.3	30
											-	-	-	-	1.3	24.1	30
											-	-	-	3.5	1.3	27.6	30
											EH*D-7M15	15.0	14.4	-	-	40.9	45
														3.5	-	44.4	45
														-	1.3	42.2	45
														3.5	1.3	45.7	50
											EH*D-7M30	30.0	28.9	-	-	58.9	60
														3.5	-	62.4	70
														-	1.3	60.2	70
														3.5	1.3	63.7	70
											EH*D-7M45	45.0	43.3	-	-	77.0	80
														3.5	-	80.5	90
														-	1.3	78.3	80
														3.5	1.3	81.8	90
DSH1207L	575/3/60	2	7.0	47.8	2	0.5	1.0	1	3.5	5.0	-	-	-	-	-	22.8	25
											-	-	-	3.5	-	26.3	30
											-	-	-	-	1.3	24.1	30
											-	-	-	3.5	1.3	27.6	30
											EH*D-7M15	15.0	14.4	-	-	40.9	45
														3.5	-	44.4	45
														-	1.3	42.2	45
														3.5	1.3	45.7	50
											EH*D-7M30	30.0	28.9	-	-	58.9	60
														3.5	-	62.4	70
														-	1.3	60.2	70
														3.5	1.3	63.7	70
											EH*D-7M45	45.0	43.3	-	-	77.0	80
														3.5	-	80.5	90
														-	1.3	78.3	80
														3.5	1.3	81.8	90
DSH1207W	575/3/60	2	7.0	47.8	2	0.5	1.0	1	5.0	7.2	-	-	-	-	-	25.0	30
											-	-	-	3.5	-	28.5	35
											-	-	-	-	1.3	26.3	30
											-	-	-	3.5	1.3	29.8	35
											EH*D-7M15	15.0	14.4	-	-	43.1	45
														3.5	-	46.6	50
														-	1.3	44.4	45
														3.5	1.3	47.9	50
											EH*D-7M30	30.0	28.9	-	-	61.1	70
														3.5	-	64.6	70
														-	1.3	62.4	70
														3.5	1.3	65.9	70
											EH*D-7M45	45.0	43.3	-	-	79.2	80
														3.5	-	82.7	90
														-	1.3	80.5	90
														3.5	1.3	84.0	90

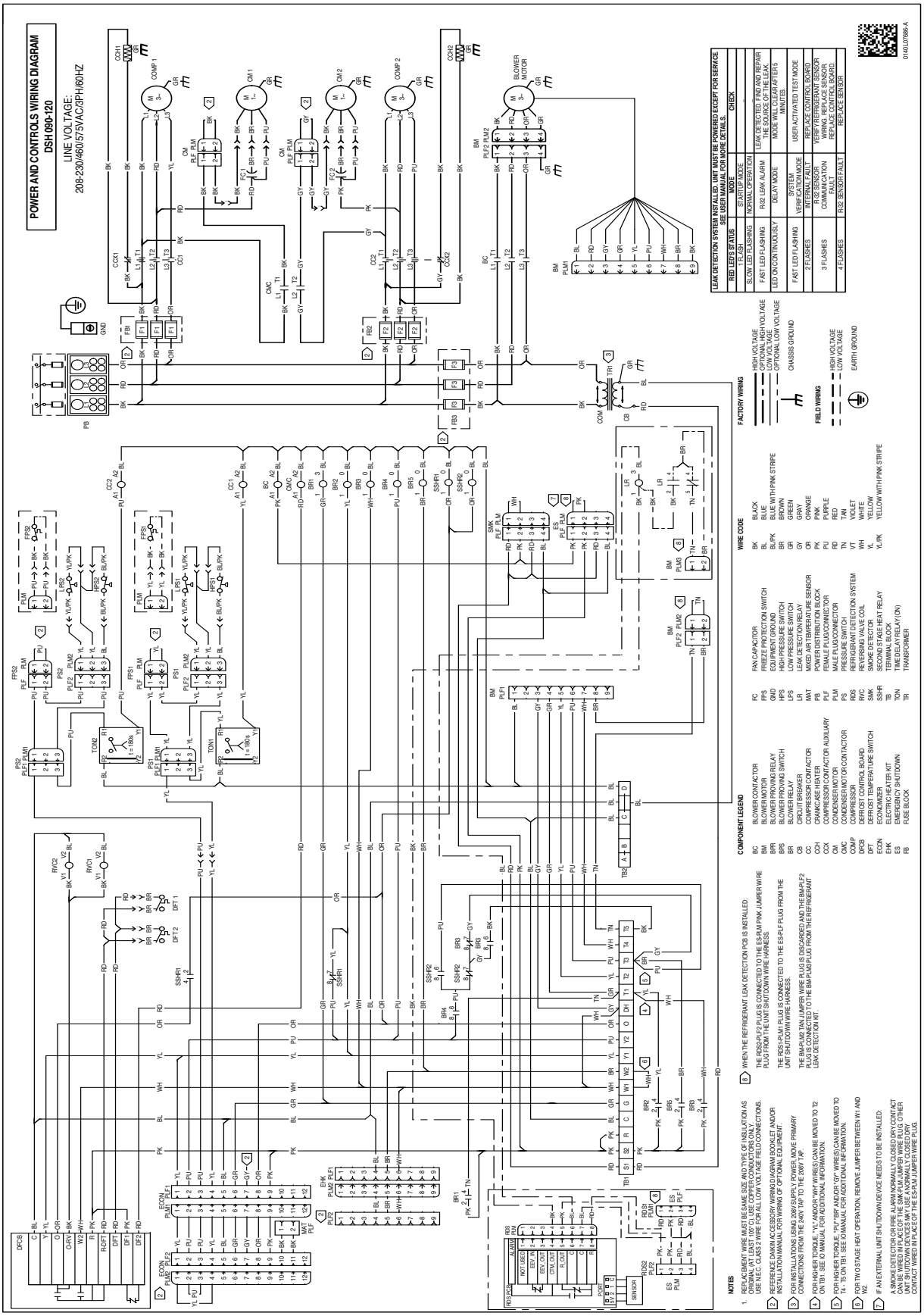

Wiring is subject to change. Always refer to the wiring diagram on the unit for the most up-to-date wiring.

WARNING

High Voltage: Disconnect all power before servicing or installing this unit. Multiple power sources may be present. Failure to do so may cause property damage, personal injury, or death.

Electrical Connections

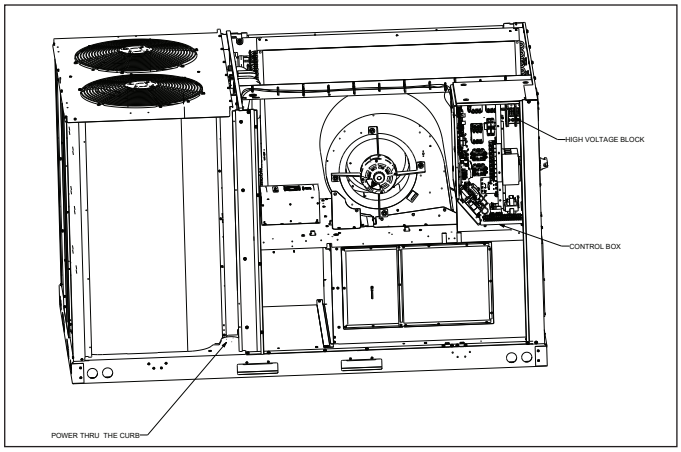

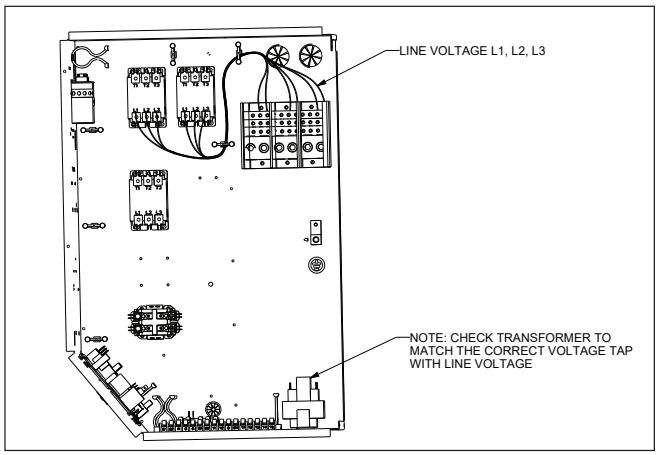

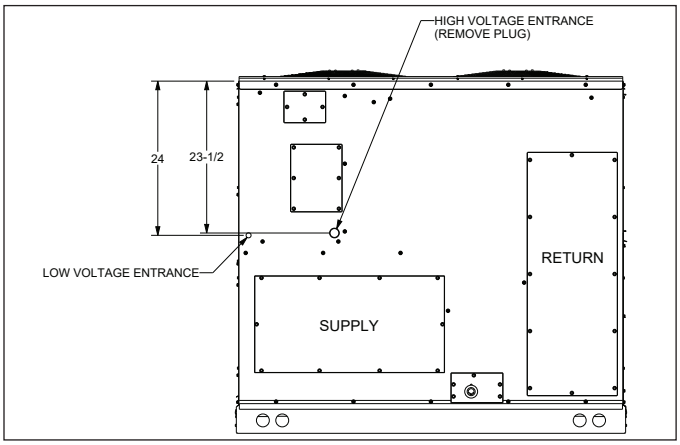

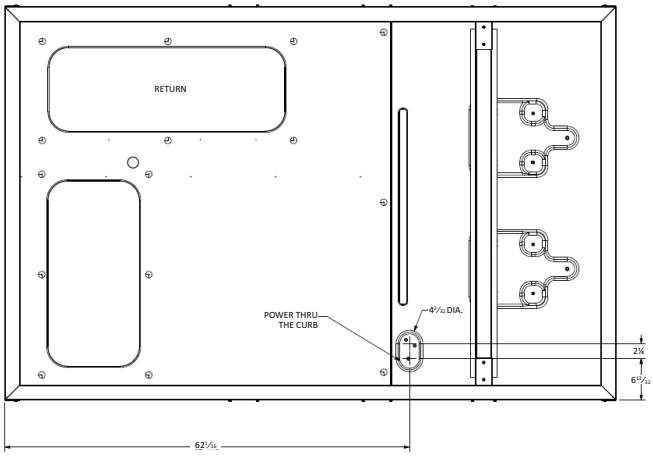

Unit Clearances

Service Clearance

Allow for recommended service clearances as shown in figure to the right. In situations that have multiple units, a 36" minimum clearance is required between the condenser coils. A clearance of 48" is recommended on all sides of the unit to allow service access and to ensure proper ventilation and condenser airflow. The top of the unit should be unobstructed. Provide a roof walkway along the sides of the unit for service and access to controls and components. Contact your Daikin sales representative for service requirements less than those recommended.

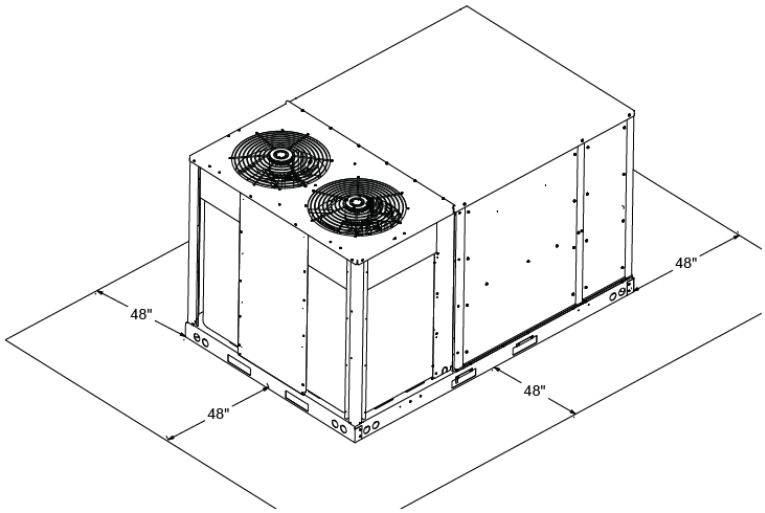

UNIT CLEARANCES

Unit Location

The structural engineer must verify that the roof has adequate support and ability to minimize deflection. Take extreme caution when using on a wooden roof structure. Unit condenser coils should be in a location that avoids any heated exhaust air.

Allow sufficient space around the unit for maintenance/service clearance. Consult your Daikin sales representative if available clearances do not meet minimum recommendations.

Where code considerations, such as the NEC, require extended clearances, these take precedence.

Provisions for forks have been included in the unit base frame. No other fork locations are approved.

» Unit must be lifted by the four lifting holes located at the base frame corners.

» Lifting cables should be attached to the unit with shackles.

» The distance between the crane hook and the top of the unit must not be less than 60".

» Two spreader bars must span over the unit to prevent damage to the cabinet by the lift cables. Spreader bars must be of sufficient length so that cables do not come in contact with the unit during transport. Remove wood struts mounted beneath unit base frame before setting unit on roof curb. These struts are intended to protect unit base frame from forklift damage. To remove the struts, extract the sheet metal retainers and pull the struts through the base of the unit. Refer to rigging label on the unit.

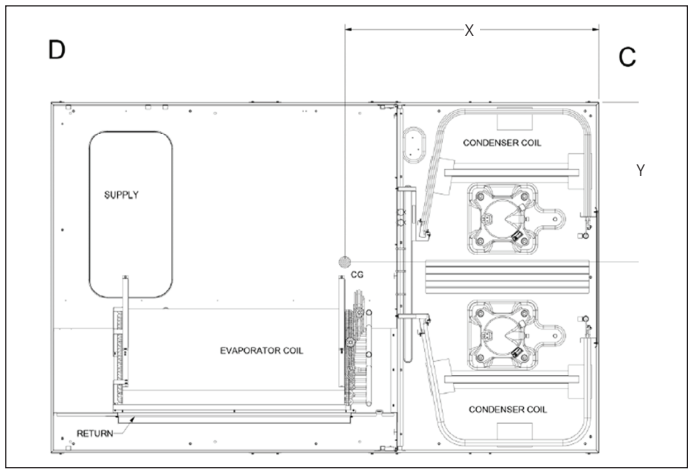

Corner & Center-of-Gravity Locations

Important: If using bottom discharge with roof curb, ductwork should be attached to the curb prior to installing the unit. Refer to the Roof Curb Installation Instructions for proper curb installation. Curbing must be installed in compliance with the National Roofing Contractors Association Manual. Lower unit carefully onto roof mounting curb. While rigging the unit, the center of gravity will cause the condenser end to be lower than the supply air end. Bring condenser end of unit into alignment with the curb. With condenser end of the unit resting on curb member and using curb as a fulcrum, lower opposite end of the unit until entire unit is seated on the curb. When a rectangular cantilever curb is used, take care to center the unit. Check for proper alignment and orientation of supply and return openings with duct.

Roof Curb Installation

The roof curb is field-assembled and must be installed level (within 1/16" per foot side to side). A sub-base must be constructed by the contractor in applications involving pitched roofs. Gaskets are furnished and must be installed between the unit and curb. For proper installation, follow NRCA guidelines. In applications requiring post and rail installation, an I-beam securely mounted on multiple posts should support the unit on each side. In addition, the insulation on the underside of the unit should be protected from the elements. Applications in geographic areas subjected to seismic or hurricane conditions must meet code requirements for fastening the unit to the curb and the curb to the building structure. For further and more detailed information please refer to our Daikin Light Commercial Packaged unit IOD.

Weights

Model	Shipping Weight (lbs)	Operating Weight (lbs)	Corner Weights (lbs)				Length	Width
			A	B	C	D	X (in)	Y (in)
DSH090	1200	1120	226	282	342	350	45	26
DSH102	1214	1134	302	224	381	227	41	27
DSH120	1234	1154	271	286	353	244	39	28

For details on accessories refer to document **PM-LC-ACCESSORIES**

Our continuing commitment to quality products may mean a change in specifications without notice.
©2025 DAIKIN COMFORT TECHNOLGIES MANUFACTURING, L.P. • Houston, Texas • Printed in the USA.