# DSH Commercial

## R-32 Standard Efficiency Heat Pump
## Direct-Drive Packaged Rooftop Unit
## 7.5 - 10 Ton DSH Light Commercial

*Up to 16 IEER / 11.4 EER*

*Complete warranty details available from your local distributor or manufacturer's representative or at www.daikincomfort.com or www.daikinac.com

# Our Perfect Package:

## Harnessing energy-efficient performance, proven technology, and enhanced comfort for life.

Since becoming the first company in Japan to manufacture packaged air conditioning systems, in 1951, Daikin has supported comfortable indoor living based on the strengths and technologies that have led to the growth of the company becoming one of the world's largest manufacturers of HVAC products, systems and refrigerants.

Today, as a comprehensive global manufacturer of HVAC products and systems, the Daikin brand is committed to being recognized as a truly global and excellent company capable of continually creating new value for its customers. The company plans to pursue sustainable growth and foster business operations that consistently harmonize with the goals of improving indoor comfort.

The group philosophy of the company includes:

- Creating new value continuously for customers
- Developing world leading energy-saving technology
- Being a flexible and dynamic organization
- Allowing employees to be the driving force for the success of the company
- Fostering an atmosphere of best practices, boldness, and innovation
- Thinking and acting globally

# Contents


| | | |
|---|---|---|
| 2 | Introduction | 2 |
| 4 | Nomenclature | 4 |
| 5 | Features and Benefits | 5 |
| | Applications | 8 |
| | Serviceability | 8 |
| 9 | Product Specifications | 9 |
| | AHRI Ratings | 12 |
| | Sound Data | 12 |
| | Coil Dimensions | 12 |
| 13 | Dimensional Data | 13 |
| 14 | Expanding Cooling Data | 14 |
| 20 | Electric Heater Data | 20 |
| 21 | Air Flow | 21 |
| 33 | Static Pressure | 33 |
| 34 | Heating Data | 34 |
| 35 | Electrical Data | 35 |
| 42 | Wiring Diagrams | 42 |
| 43 | Electrical Connections | 43 |
| | Unit Clearances | 43 |
| 44 | Installation | 44 |
| | Weights | 44 |


For details on accessories refer to document **PM-LC-ACCESSORIES**

# Nomenclature

| D | S | H | 300 | 3 | S | 400 | C | A | A | X | X | X | X | X | X | X | X | A | * |
|---|---|---|---|---|---|---|---|---|---|---|---|---|---|---|---|---|---|---|---|
| 1 | 2 | 3 | 4,5,6 | 7 | 8 | 9,10,11 | 12 | 13 | 14 | 15 | 16 | 17 | 18 | 19 | 20 | 21 | 22 | 23 | 24 |

**Revision Levels**
Major & Minor

**Brand**
D Daikin

**Configuration**
S R 32 Standard Efficiency
H R 32 High Efficiency

**Application**
C Cooling
G Gas Heat
H Heat Pump

**Nominal Cooling Capacity**

| | | | | | |
|---|---|---|---|---|---|
| 036 | 3 Tons | 090 | 7½ Tons | 240 | 20 Tons |
| 048 | 4 Tons | 102 | 8½ Tons | 300 | 25 Tons |
| 060 | 5 Tons | 120 | 10 Tons | | |
| 072 | 6 Tons | | | | |

**Voltage**

| | | | |
|---|---|---|---|
| 1 | 208-230/1/60 | 4 | 460/3/60 |
| 3 | 208-230/3/60 | 7 | 575/3/60 |

**Supply Fan/Drive Type/Motor**
D Direct Drive - Standard Static
L Direct Drive - Medium Static
W Direct Drive - High Static

**Nominal Heating Capacity**

**Gas/Electric**
045 45,000 BTU/h
060 60,000 BTU/h
070 70,000 BTU/h
080 80,000 BTU/h
090 90,000 BTU/h
100 100,000 BTU/h
115 115,000 BTU/h
125 125,000 BTU/h
130 130,000 BTU/h
140 140,000 BTU/h
150 150,000 BTU/h
180 180,000 BTU/h
210 210,000 BTU/h
225 225,000 BTU/h
240 240,000 BTU/h
260 260,000 BTU/h
350 350,000 BTU/h
350 350,000 BTU/h
360 360,000 BTU/h
400 400,000 BTU/h
480 480,000 BTU/h

**A/C H/P Factory-Installed Electric Heat**

| | | | |
|---|---|---|---|
| XXX | No Heat | XXX | No Heat |
| 005 | 5kW | 030 | 30 kW |
| 010 | 10 kW | 045 | 45kW |
| 015 | 15 kW | 060 | 60kW |
| 020 | 20 kW | 075 | 75kW |

**Electric Heat w/ SCR controls**

| | | | |
|---|---|---|---|
| S05 | 5kW | S22 | 20 kW |
| S10 | 10 kW | S25 | 25 kW |
| S15 | 15 kW | S30 | 30 kW |
| S16 | 15 kW | S31 | 30 kW |
| S18 | 18 kW | S45 | 45 kW |
| S20 | 20 kW | S46 | 45 kW |
| S21 | 20 kW | S60 | 60 kW |
| | | S75 | 75kW |

** See product specifications for heat size(s) available for each capacity.*

**Refrigeration Systems**
A Single stage cooling modes
C Two stage cooling modes
F Two stage cooling modes with Hot Gas Reheat and Low-ambient control
G Single stage cooling mode with Low-ambient controller
H Two stage cooling mode with Low-ambient controller

**Heat Exchanger**
X No options
A Standard Aluminized Exchanger
S Stainless Steel Exchanger
U Ultra Low NoX

**Controls**
A Electromechanical controls
B DDC w/ BACnet interface

**Sensors**
X No Options
A RA Smoke Detector
B SA Smoke Detector
C RA & SA Smoke Detector

**Hail guard**
X No Options
C Hail Guard

**Economizer**
X No Options
A Ultra Low-Leak Downflow Economizer w/ Enthalpy Sensor
C Ultra Low-Leak Internal Horizontal Economizer w/ Enthalpy Sensor
E Ultra Low-Leak Downflow Economizer for DDC controls w/ Enthalpy Sensor
F Ultra Low-Leak Horizontal Economizer for DDC controls w/ Enthalpy Sensor
G Ultra Low-Leak Downflow Economizer w/ Dry Bulb Sensor
J Ultra Low-Leak Internal Horizontal Economizer w/ Dry Bulb Sensor
L Ultra Low-Leak Downflow Economizer for DDC controls w/ Dry Bulb Sensor
M Ultra Low-Leak Horizontal Economizer for DDC controls w/ Dry Bulb Sensor

**Electrical**
X No Options
A Non-Fused Disconnect
B Phase Monitor
C Thru-the-base connections
E Non-Fused Disconnect and Phase Monitor
F Non-Fused Disconnect and Thru-the-base connections
H Phase Monitor and Thru-the-base connections
L Non-Fused Disconnect, Thru-the-base connections and Phase Monitor

**Service Options**
X No Option
A Powered convenience outlet
B Non-powered convenience outlet
C Hinge Panels
D Hinged Panels and Powered convenience outlet
E Hinged Panels and non-powered convenience outlet

**IAQ**
X No Options

**PE Connection**
X No Options
B Single-point power connection for Power Exhaust

X No Options

**HP Stocking Models**

New Daikin 7.5-10 Ton Direct-Drive

| Model Number | Code String |
|---|---|
| DSH0903D000001S | DSH0903DXXXCXAXXXXXXXX |
| DSH0904D000001S | DSH0904DXXXCXAXXXXXXXX |
| DSH0907D000001S | DSH0907DXXXCXAXXXXXXXX |
| DSH1023D000001S | DSH1023DXXXCXAXXXXXXXX |
| DSH1024D000001S | DSH1024DXXXCXAXXXXXXXX |
| DSH1027D000001S | DSH1027DXXXCXAXXXXXXXX |
| DSH1203D000001S | DSH1203DXXXCXAXXXXXXXX |
| DSH1204D000001S | DSH1204DXXXCXAXXXXXXXX |
| DSH1207D000001S | DSH1207DXXXCXAXXXXXXXX |

Daikin Packaged Rooftop Units (RTUs) are built to perform, with features and options that help provide low installation and operation costs, superior indoor air quality, efficient operation, and longevity.

## Installation

Daikin Packaged units are designed with fast and easy installation in mind and are ideal for both new construction and retrofit projects. Our packaged rooftop units are built to be a direct replacement for most rooftop units on the field without the need of a curb adapter, to be able to replace the unit in a shorter time and at a lower cost .

## Cabinet Construction

Daikin packaged rooftop units are made with high quality galvanized steel with a powder-paint finish to provide higher corrosion resistance.

» Easy accessibility using our tool-less filter access.

» Unit is fully insulated to prevent sweating and thermal losses, using our foil face fiberglass insulation which also omits exposed filter fibers into the airstream.

» 1" Raised flanged edges around the supply and return offer easy installation for the duct connections.

» The full perimeter base rail is built using heavy gauge galvanized steel for a stronger structural installation, the base rails are a minimum of 3 ½" tall and include holes to allow for overhead rigging and lifting with forklifts.

» Electrical lines and can be brought through the base of the unit or through the horizontal knockout for easy installation and accessibility on the field.

## Compressor

High performance, low noise scroll compressors to match the required total load.

» Resiliently factory-mounted on rubber grommets for vibration isolation

» Refrigeration circuit includes both high and low pressure safety switches.

» Unit is factory charged with environmentally friendly low GWP R32 refrigerant.

» Two single stage scroll compressor individuality circuited for partial load applications.

» Compressor location outside the condenser section to avoid air bypass.

## Supply Fan

The direct-drive with airfoil single width, single inlet (SWSI) Class II construction supply fan with aluminum fan + blades provides efficient and quiet operation at wide ranging static pressure and air flow requirments.

» Slide out forward curb fan for easy maintenance and replacement.

» Ball bearing Direct-Drive EEM motor removes the need for belts, sheaves, bearings and lubrication.

» High-static drive options for application with high airflow/ static requirements.

» Each fan assembly is dynamically trim balanced at the factory before shipment for quick start-up and efficient operation.

» Motor equipped with thermal overload to provide protection and lasting operation.

## Coils

The indoor coil section is installed in a draw through configuration to provide better dehumidification.

These coils are constructed with seamless copper tubes, mechanically bonded into aluminum plate-type finds with full drawn collars to completely cover the tubes for high operating efficiencies.

» Microchannel heat exchanger technology on all condenser coils for improved performance and reduced refrigerant load.

» Coils are factory pressure tested to ensure pressure and leak integrity.

## Controls and Wiring

Packaged rooftop units come equipped with a well-organized, large, easy to use weatherproof internal control box with easy access, for a better user experience.

» Units are factory-wired with color-coded wires and complete 24-volt Electromechanical controls package.

» Units include single-point power entry as standard and also available with electric heat kits if selected.

» Terminal strips are provided as standard for easy installation and low voltage power wiring.

## Filtration

Unit provides a draw-through filter section as standard for better air quality and long lasting component maintenance.

» Filters installed on the units are standard off the shelf sizes for easy replacement.

» Tool-less filter access for easy and fast filter replacement and service.

## Heating Section

Wide ranging of electric heat selections effectively handle most comfort heating demand from morning warm-up control to full heat.

## Electric Heat

ETL approved electric heat is factory assembled, installed and tested.

» Heating control is fully integrated into the unit's control system for quick start-up and reliable control.

» Durable low watt density, nickel chromium elements provide longer life (compared to units without)..

» Fuses are provided in each branch circuit to a maximum of 48 Amps per NEC requirements.

» Single-point power connection reduces installation cost.

» For operational safeties electric heat includes automatic reset, and high temperature limit safety protection and an airflow safety switch to prevent electric heat operation in the event of no airflow.

## Electrical

Units are completely wired and tested at the factory to provide faster commissioning and start-up.

» Wiring complies with NEC requirements and all applicable UL standards.

» Units are factory-wired with color-coded wires and complete 24-volt electromechanical controls package.

» A 115 V GFI convenience receptacle requiring independent power supply for the receptacle is optional.

» An optional unit powered 20 amp 115 V convenience receptacle, complete with factory mounted transformer, disconnect switch, and primary and secondary overload protection, eliminates the need to pull a separate 115 V power source.

» Unit includes knockouts in the bottom of the main control panels for field wiring entrance.

» A single-point power connection with power block is standard and a terminal strip is provided for connecting low voltage control wiring.

» For better serviceability an optional non-fused disconnect switch can be installed inside the control panel and operated by an externally mounted handle to disconnect the electrical power at the unit

DAIKIN

## Applications

Daikin Rooftop units are intended for comfort cooling applications in normal heating, ventilating, and air conditioning. Consult your local Daikin sales representative for applications involving operations at high ambient temperatures, high altitudes, non-cataloged voltages, or for job-specific unit selections that fall outside of the range of the catalog tables.

For proper operation, units should be rigged in accordance with instructions stated on the installation manual. Fire dampers, if required, must be installed in the ductwork according to local and/or state codes. No space is allowed for these dampers in the unit.

Follow factory check, test and start procedures explicitly to achieve satisfactory start-up and operation.

Most rooftop applications take advantage of the significant energy savings provided with economizer operation. When an economizer system is used, mechanical refrigeration is typically not required below an ambient temperature of 50°F.

## Serviceability

Daikin packaged rooftop units are built with serviceability in mind, designed to make future maintenance and service on the unit easy and accessible.

- Our packaged rooftop units offer a slide out blower to facilitate the access and removal of the fan.
- Filter panels offer tool-less access for easy maintenance.
- Independent compressor outside of the air bypass to eliminate component blockage and provide easy access.
- Label Field Connections are color-coded to identify point to point component connections.
- All 7.5-10 ton units are designed for convertible airflow orientation to serve downflow or horizontal applications. Every unit ships prepared to convert to horizontal orientation in the field if required.

| Model | DSH0903D000001S | DSH0904D000001S | DSH0907D000001S |
|---|---|---|---|
| **COOLING CAPACITY** | | | |
| Total BTU/H | 86,000 | 86,000 | 86,000 |
| IEER / EER | 16/11.4 | 16/11.5 | 16/11.6 |
| | N/A | N/A | N/A |
| AHRI Reference # | | | |
| **EVAPORATOR MOTOR / RTPF (ROUND TUBE PLATE FIN)** | | | |
| Motor Type | Direct Drive | Direct Drive | Direct Drive |
| External Static Pressure (ESP) | Standard | Standard | Standard |
| Wheel Dia. X Width | 15x12 | 15x12 | 15x12 |
| Indoor Nominal CFM | 3000 | 3000 | 3000 |
| RPM | 300-1600 | 300-1600 | 300-1600 |
| Indoor Horsepower | 2.4 | 2.4 | 2.4 |
| Filter Size (in) | 20 X 25 X 2 (2)<br>25 X 25 X 2 (2) | 20 X 25 X 2 (2)<br>25 X 25 X 2 (2) | 20 X 25 X 2 (2)<br>25 X 25 X 2 (2) |
| Drain Size (NPT) | 3/4 | 3/4 | 3/4 |
| R-410A Refrigerant Charge (oz.) | 143/143 | 143/143 | 143/143 |
| Evaporator Coil Face Area ($ft^2$) | 15 | 15 | 15 |
| Rows Deep/ Fins per Inch | 3 / 16 | 3 / 16 | 3 / 16 |
| **CONDENSER FAN / MCHX (MICROCHANNEL HEAT EXCHANGER)** | | | |
| Quantity of Condenser Fan Motors | 2 | 2 | 2 |
| RPM (High/Low stage) | 1130 | 1115 | 1075 |
| Outdoor Horsepower | 1/2 | 1/2 | 1/2 |
| Fan Diameter/ # Fan Blades | 22 / 3 | 22 / 3 | 22 / 3 |
| Face Area ($ft^2$) | 31.1 | 31.1 | 31.1 |
| Rows Deep / Fins per Inch | 2/16 | 2/16 | 2/16 |
| **COMPRESSOR** | | | |
| Quantity / Type / Stages Per Compression | 2/ Scroll / 1 | 2/ Scroll / 1 | 2/ Scroll / 1 |
| Compressor RLA / LRA | 12.2/120 | 5.8/55.1 | 5.8/41 |
| **ELECTRICAL DATA** | | | |
| Voltage-Phase-Frequency | 208/230-3-60 | 460-3-60 | 575-3-60 |
| Indoor Blower FLA | 8 | 5.4 | 4.0 |
| Max External Static (In. W.C.) | 0.8 | 0.8 | 0.8 |
| Outdoor Fan FLA | 2.7 | 1.4 | 1 |
| Min. Circuit Ampacity[1] | 39.4/39.4 | 20.1 | 18.3 |
| Max. Overcurrent Protection (A)[2] | 50/50 | 25 | 20 |
| Power Supply Conduit Hole Dia. (in) | 1.375 | 1.375 | 1.375 |
| Low-Voltage Conduit Hole Dia. (in) | 0.5 | 0.5 | 0.5 |
| **OPERATING WEIGHT (LBS.)** | | | |
| Operating Weight (lbs) | 1157 | 1157 | 1157 |
| **SHIPPING WEIGHT (LBS.)** | | | |
| Ship Weight (lbs) | 1229 | 1229 | 1229 |

[1] Wire size should be determined in accordance with National Electrical Codes. Extensive wire runs will require larger wire sizes.
[2] May use fuses or HACR-type circuit breakers of the same size as noted.
Note: Always check the S&R plate for electrical data on the unit being installed.

| Model | DSH1023D000001S | DSH1024D000001S | DSH1027D000001S |
|---|---|---|---|
| **COOLING CAPACITY** | | | |
| Total BTU/H | 98,000 | 98,000 | 98,000 |
| IEER / EER | 15.5/11.4 | 15.5/11.5 | 15.5/11.6 |
| | N/A | N/A | N/A |
| AHRI Reference # | | | |
| **EVAPORATOR MOTOR / RTPF (ROUND TUBE PLATE FIN)** | | | |
| Motor Type | Direct Drive | Direct Drive | Direct Drive |
| External Static Pressure (ESP) | Standard | Standard | Standard |
| Wheel Dia. X Width | 15x12 | 15x12 | 15x12 |
| Indoor Nominal CFM | 3000 | 3000 | 3000 |
| RPM | 300-1600 | 300-1600 | 300-1600 |
| Indoor Horsepower | 2.4 | 2.4 | 2.4 |
| Filter Size (in) | 20 X 25 X 2 (2)<br>25 X 25 X 2 (2) | 20 X 25 X 2 (2)<br>25 X 25 X 2 (2) | 20 X 25 X 2 (2)<br>25 X 25 X 2 (2) |
| Drain Size (NPT) | 3/4 | 3/4 | 3/4 |
| R-410A Refrigerant Charge (oz.) | 152/152 | 152/152 | 152/152 |
| Evaporator Coil Face Area ($ft^2$) | 15 | 15 | 15 |
| Rows Deep/ Fins per Inch | 3 / 16 | 3 / 16 | 3 / 16 |
| **CONDENSER FAN / MCHX (MICROCHANNEL HEAT EXCHANGER)** | | | |
| Quantity of Condenser Fan Motors | 2 | 2 | 2 |
| RPM (High/Low stage) | 1122 | 1050 | 1075 |
| Outdoor Horsepower | 1/3 | 1/3 | 1/3 |
| Fan Diameter/ # Fan Blades | 22 / 3 | 22 / 3 | 22 / 3 |
| Face Area ($ft^2$) | 33.3 | 33.3 | 33.3 |
| Rows Deep / Fins per Inch | 2/16 | 2/16 | 2/16 |
| **COMPRESSOR** | | | |
| Quantity / Type / Stages Per Compression | 2/ Scroll / 1 | 2/ Scroll / 1 | 2/ Scroll / 1 |
| Compressor RLA / LRA | 14.1/120 | 6.4/55.1 | 5.1/41 |
| **ELECTRICAL DATA** | | | |
| Voltage-Phase-Frequency | 208/230-3-60 | 460-3-60 | 575-3-60 |
| Indoor Blower FLA | 8 | 5.4 | 4.0 |
| Max External Static (In. W.C.) | 0.8 | 0.8 | 0.8 |
| Outdoor Fan FLA | 2.7 | 1.4 | 1 |
| Min. Circuit Ampacity[1] | 43.7/43.7 | 21.5 | 16.9 |
| Max. Overcurrent Protection (A)[2] | 50/50 | 25 | 20 |
| Power Supply Conduit Hole Dia. (in) | 1.375 | 1.375 | 1.375 |
| Low-Voltage Conduit Hole Dia. (in) | 0.5 | 0.5 | 0.5 |
| **OPERATING WEIGHT (LBS.)** | | | |
| Operating Weight (lbs) | 1157 | 1157 | 1157 |
| **SHIPPING WEIGHT (LBS.)** | | | |
| Ship Weight (lbs) | 1229 | 1229 | 1229 |

[1] Wire size should be determined in accordance with National Electrical Codes. Extensive wire runs will require larger wire sizes.
[2] May use fuses or HACR-type circuit breakers of the same size as noted.
Note: Always check the S&R plate for electrical data on the unit being installed.

| Model | DSH1203D000001S | DSH1204D000001S | DSH1207D000001S |
|---|---|---|---|
| **COOLING CAPACITY** | | | |
| Total BTU/H | 116,000 | 116,000 | 116,000 |
| IEER / EER | 15.2/11.4 | 15.2/11.5 | 15.2/11.6 |
| | N/A | N/A | N/A |
| AHRI Reference # | | | |
| **EVAPORATOR MOTOR / RTPF (ROUND TUBE PLATE FIN)** | | | |
| Motor Type | Direct Drive | Direct Drive | Direct Drive |
| External Static Pressure (ESP) | Standard | Standard | Standard |
| Wheel Dia. X Width | 15x15 | 15x15 | 15x15 |
| Indoor Nominal CFM | 3850 | 3850 | 3850 |
| RPM | 300-1600 | 300-1600 | 300-1600 |
| Indoor Horsepower | 3.5 | 3.5 | 3.5 |
| Filter Size (in) | 20 X 25 X 2 (2)<br>25 X 25 X 2 (2) | 20 X 25 X 2 (2)<br>25 X 25 X 2 (2) | 20 X 25 X 2 (2)<br>25 X 25 X 2 (2) |
| Drain Size (NPT) | 3/4 | 3/4 | 3/4 |
| R-410A Refrigerant Charge (oz.) | 141/140 | 141/140 | 141/140 |
| Evaporator Coil Face Area ($ft^2$) | 15 | 15 | 15 |
| Rows Deep/ Fins per Inch | 3 / 16 | 3 / 16 | 3 / 16 |
| **CONDENSER FAN / MCHX (MICROCHANNEL HEAT EXCHANGER)** | | | |
| Quantity of Condenser Fan Motors | 2 | 2 | 2 |
| RPM (High/Low stage) | 1130 | 1115 | 1075 |
| Outdoor Horsepower | 1/2 | 1/2 | 1/2 |
| Fan Diameter/ # Fan Blades | 22 / 3 | 22 / 3 | 22 / 3 |
| Face Area ($ft^2$) | 33.3 | 33.3 | 33.3 |
| Rows Deep / Fins per Inch | 2/16 | 2/16 | 2/16 |
| **COMPRESSOR** | | | |
| Quantity / Type / Stages Per Compression | 2/ Scroll / 1 | 2/ Scroll / 1 | 2/ Scroll / 1 |
| Compressor RLA / LRA | 17.3/155 | 7.7/58.1 | 7.0/47.8 |
| **ELECTRICAL DATA** | | | |
| Voltage-Phase-Frequency | 208/230-3-60 | 460-3-60 | 575-3-60 |
| Indoor Blower FLA | 10.9 | 7.2 | 5.0 |
| Max External Static (In. W.C.) | 0.8 | 0.8 | 0.8 |
| Outdoor Fan FLA | 2.7 | 1.4 | 1 |
| Min. Circuit Ampacity[1] | 55.2/55.2 | 27.3 | 22.8 |
| Max. Overcurrent Protection (A)[2] | 70/70 | 30 | 25 |
| Power Supply Conduit Hole Dia. (in) | 1.375 | 1.375 | 1.375 |
| Low-Voltage Conduit Hole Dia. (in) | 0.5 | 0.5 | 0.5 |
| **OPERATING WEIGHT (LBS.)** | | | |
| Operating Weight (lbs) | 1169 | 1169 | 1169 |
| **SHIPPING WEIGHT (LBS.)** | | | |
| Ship Weight (lbs) | 1241 | 1241 | 1241 |

[1] Wire size should be determined in accordance with National Electrical Codes. Extensive wire runs will require larger wire sizes.
[2] May use fuses or HACR-type circuit breakers of the same size as noted.
Note: Always check the S&R plate for electrical data on the unit being installed.

## Sound Data

| Static Pressure | 7.5 Ton Sound (DB) at 60 Hz | | | | | | | | | | |
|---|---|---|---|---|---|---|---|---|---|---|---|
| | Indoor CFM | Componet | A-Weighted | 63 | 125 | 250 | 500 | 1000 | 2000 | 4000 | 8000 |
| 0.8 | 3,000 | Discharge | 76.6 | 95.9 | 78.9 | 68.0 | 74.3 | 69.7 | 67.0 | 66.6 | 60.0 |
| | | Inlet | 67.4 | 91.6 | 76.3 | 65.2 | 61.6 | 59.0 | 53.2 | 52.6 | 46.8 |
| 1.4 | | Discharge | 78.8 | 94.8 | 83.0 | 71.0 | 72.6 | 75.3 | 70.0 | 69.1 | 63.0 |
| | | Inlet | 69.8 | 91.1 | 80.3 | 67.5 | 63.9 | 62.6 | 56.6 | 55.9 | 50.8 |
| 2.0 | | Discharge | 82.8 | 99.9 | 91.3 | 76.7 | 77.0 | 77.6 | 74.5 | 72.2 | 66.9 |
| | | Inlet | 72.9 | 93.3 | 84.7 | 71.8 | 66.5 | 64.6 | 59.6 | 58.8 | 54.1 |
| N/A | N/A | Outdoor | 86.8 | 95.4 | 85.3 | 86.8 | 83.3 | 81.7 | 79.8 | 72.2 | 66.9 |

| Static Pressure | 8.5 Ton Sound (DB) at 60 Hz | | | | | | | | | | |
|---|---|---|---|---|---|---|---|---|---|---|---|
| | Indoor CFM | Componet | A-Weighted | 63 | 125 | 250 | 500 | 1000 | 2000 | 4000 | 8000 |
| 0.8 | 3,400 | Discharge | 78.3 | 97.3 | 80.8 | 70.2 | 74.2 | 72.6 | 69.4 | 69.3 | 63.7 |
| | | Inlet | 68.5 | 90.3 | 77.7 | 66.0 | 62.7 | 61.7 | 55.2 | 55.0 | 49.8 |
| 1.4 | | Discharge | 80.0 | 94.5 | 83.4 | 71.8 | 73.7 | 76.2 | 71.5 | 71.0 | 65.9 |
| | | Inlet | 69.6 | 89.9 | 78.1 | 68.2 | 64.7 | 63.9 | 57.5 | 57.4 | 52.7 |
| 2.0 | | Discharge | 82.7 | 98.5 | 89.3 | 76.3 | 77.0 | 78.3 | 74.2 | 72.7 | 67.9 |
| | | Inlet | 73.3 | 92.8 | 84.7 | 72.4 | 67.5 | 65.7 | 60.7 | 60.0 | 55.6 |
| N/A | N/A | Outdoor | 83.7 | 93.2 | 89.1 | 83.5 | 80.3 | 78.7 | 74.5 | 69.8 | 64.7 |

| Static Pressure | 10 Ton Sound (DB) at 60 Hz | | | | | | | | | | |
|---|---|---|---|---|---|---|---|---|---|---|---|
| | Indoor CFM | Componet | A-Weighted | 63 | 125 | 250 | 500 | 1000 | 2000 | 4000 | 8000 |
| 0.8 | 4,000 | Discharge | 75.8 | 91.2 | 83.6 | 73.3 | 71.6 | 70.1 | 66.8 | 64.9 | 58.6 |
| | | Inlet | 69.6 | 85.5 | 79.8 | 73.2 | 64.2 | 60.8 | 54.7 | 52.8 | 46.6 |
| 1.4 | | Discharge | 80.1 | 96.1 | 87.6 | 76.7 | 74.6 | 75.1 | 71.4 | 69.3 | 63.6 |
| | | Inlet | 71.3 | 88.9 | 81.9 | 72.6 | 65.7 | 63.6 | 58.4 | 57.0 | 50.8 |
| 2.0 | | Discharge | 81.6 | 98.1 | 89.4 | 80.8 | 76.2 | 75.9 | 73.3 | 70.8 | 65.0 |
| | | Inlet | 73.9 | 91.2 | 84.6 | 76.8 | 67.2 | 65.6 | 60.7 | 59.7 | 53.9 |
| N/A | N/A | Outdoor | 86.8 | 95.4 | 85.3 | 86.8 | 83.3 | 81.7 | 79.8 | 72.2 | 66.9 |

[1] Outdoor sound data is measured in accordance with AHRI standard 270

[2] Discharge and Inlet sound data was measured in accordanced with AHRI standard 260.

[3] Measurements are expressed in terms of sound power. Do not compare these values to sound pressure values because sound pressure depends on specific environment factors which normally do not match individual applications. Sound power values are independent of the environment and therefore more accurate.

[4] A-weighted sound ratings filter out high and very low frequencies, to better approximate the response of "average" human ear. A-weighted measurements for Daikin units are taken in accordance with AHRI standards 260 and 270.

## AHRI Ratings

| MODEL | CAPACITY | EER | IEER | 47 Capacity | 47 COP | 17 Capacity | 17 COP |
|---|---|---|---|---|---|---|---|
| **DSH0903D** | 86,000 | 11.4 | 16 | 86,000 | 3.4 | 50,000 | 2.25 |
| **DSH0904D** | 86,000 | 11.4 | 16 | 86,000 | 3.4 | 50,000 | 2.25 |
| **DSH0907D** | 86,000 | 11.4 | 16 | 86,000 | 3.4 | 50,000 | 2.25 |
| **DSH1023D** | 98,000 | 11.4 | 15.5 | 97,000 | 3.4 | 56,000 | 2.25 |
| **DSH1024D** | 98,000 | 11.4 | 15.5 | 97,000 | 3.4 | 56,000 | 2.25 |
| **DSH1027D** | 98,000 | 11.4 | 15.5 | 97,000 | 3.4 | 56,000 | 2.25 |
| **DSH1203D** | 116,000 | 11.4 | 15.2 | 116,000 | 3.4 | 66,000 | 2.25 |
| **DSH1204D** | 116,000 | 11.4 | 15.2 | 116,000 | 3.4 | 66,000 | 2.25 |
| **DSH1207D** | 116,000 | 11.4 | 15.2 | 116,000 | 3.4 | 66,000 | 2.25 |

## Coil Dimensions

| | Indoor | | | Outdoor | | |
|---|---|---|---|---|---|---|
| Tons | Fin height in. | Fin length in. | Area (Ft^2) | Fin height in. | Fin length in. | Area (Ft^2) |
| 7.5 | 41.6 | 51.8 | 15.0 | 48.5 | 46.1 | 31.1 |
| 8.5 | 41.6 | 51.8 | 15.0 | 48.5 | 49.5 | 33.3 |
| 10 | 41.6 | 51.8 | 15.0 | 48.5 | 49.5 | 33.3 |

| Model Size | DIM "A" |
|---|---|
| DSH 090 | 6½ |
| DSH 102 | 6½ |
| DSH 120 | 6½ |

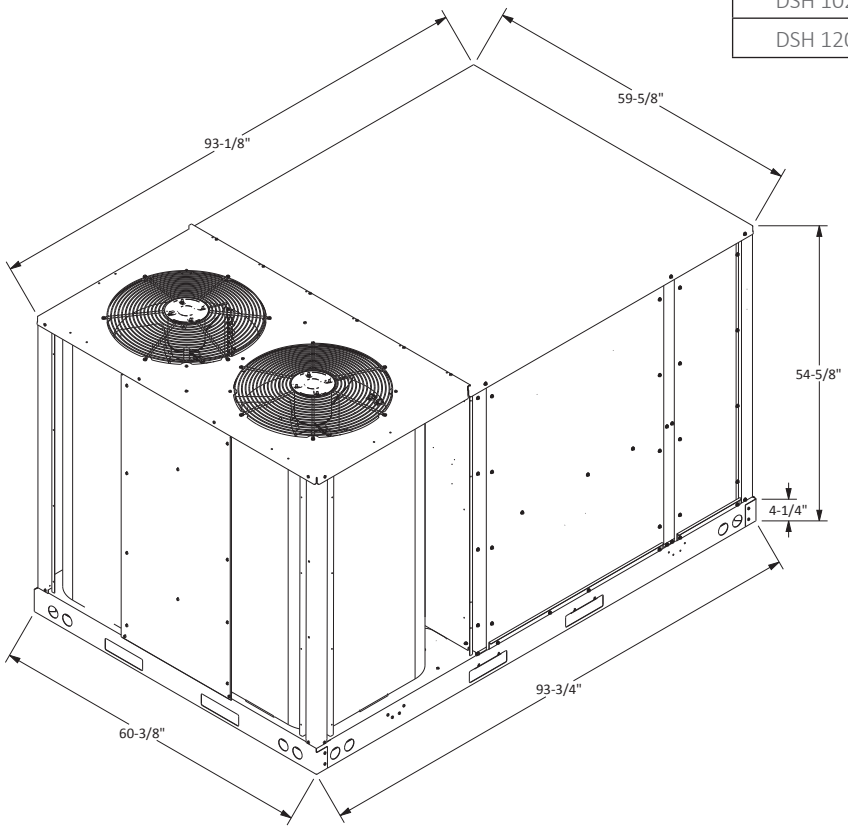


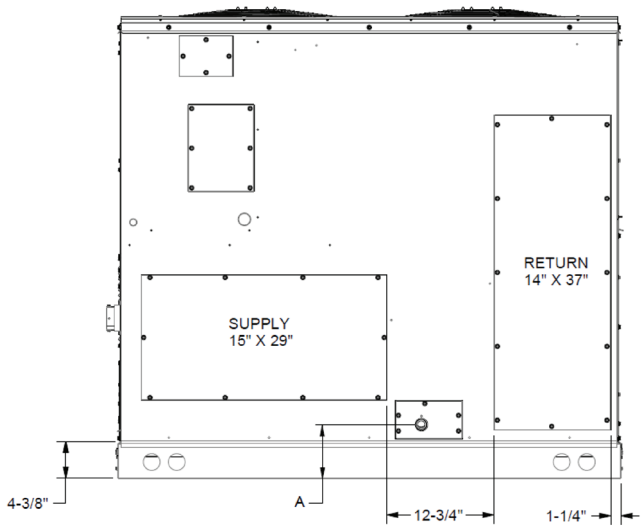


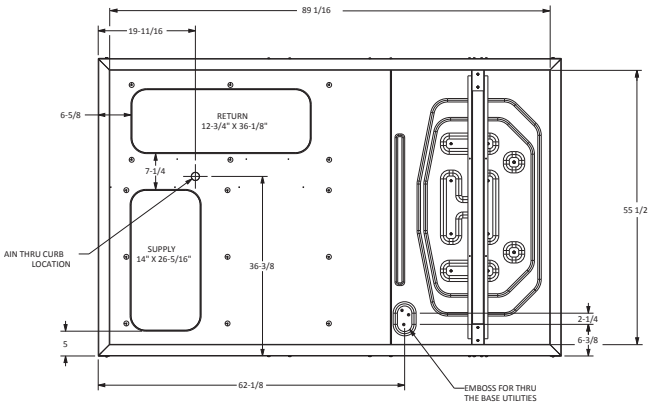

| | | | Outdoor Ambient Temperature | | | | | | | | | | | | | | | | | | | | | | | |
|---|---|---|---|---|---|---|---|---|---|---|---|---|---|---|---|---|---|---|---|---|---|---|---|---|---|---|
| | | | 65 | | | | 75 | | | | 85 | | | | 95 | | | | 105 | | | | 115 | | | |
| | | | Entering Indoor Wet Bulb Temperature | | | | | | | | | | | | | | | | | | | | | | | |
| IDB | Airflow | ID WB | 59 | 63 | 67 | 71 | 59 | 63 | 67 | 71 | 59 | 63 | 67 | 71 | 59 | 63 | 67 | 71 | 59 | 63 | 67 | 71 | 59 | 63 | 67 | 71 |
| 70 | 2625 | MBh | 87.5 | 88.7 | 91.3 | - | 86.7 | 87.9 | 90.6 | - | 84.4 | 85.7 | 88.3 | - | 80.5 | 81.7 | 84.3 | - | 75.7 | 76.9 | 79.5 | - | 71.3 | 72.5 | 75.2 | - |
| | | S/T | 0.62 | 0.54 | 0.40 | - | 0.63 | 0.55 | 0.41 | - | 1.00 | 0.57 | 0.44 | - | 1.00 | 0.59 | 0.46 | - | 1.00 | 0.62 | 0.48 | - | 1.00 | 1.00 | 0.53 | - |
| | | ΔT | 18.82 | 17.08 | 13.83 | - | 18.77 | 17.03 | 13.78 | - | 19.02 | 17.28 | 14.03 | - | 18.75 | 17.01 | 13.76 | - | 18.52 | 16.78 | 13.53 | - | 19.61 | 17.87 | 14.62 | - |
| | | kW | 5.47 | 5.47 | 5.45 | - | 6.11 | 6.10 | 6.09 | - | 6.82 | 6.81 | 6.80 | - | 7.58 | 7.58 | 7.57 | - | 8.44 | 8.44 | 8.43 | - | 9.45 | 9.45 | 9.43 | - |
| | | Amps | 21.41 | 21.39 | 21.34 | - | 24.32 | 24.30 | 24.25 | - | 27.57 | 27.55 | 27.50 | - | 31.08 | 31.06 | 31.01 | - | 35.01 | 34.99 | 34.94 | - | 39.62 | 39.60 | 39.55 | - |
| | | Hi PR | 259 | 260 | 262 | - | 300 | 301 | 303 | - | 343 | 344 | 346 | - | 389 | 390 | 392 | - | 439 | 440 | 442 | - | 492 | 493 | 495 | - |
| | | Lo PR | 131 | 133 | 136 | - | 139 | 141 | 144 | - | 146 | 148 | 151 | - | 152 | 154 | 157 | - | 158 | 160 | 163 | - | 165 | 167 | 170 | - |
| | 3000 | MBh | 88.6 | 89.9 | 92.5 | - | 87.9 | 89.1 | 91.7 | - | 85.6 | 86.8 | 89.4 | - | 81.6 | 82.9 | 85.5 | - | 76.8 | 78.1 | 80.7 | - | 72.5 | 73.7 | 76.3 | - |
| | | S/T | 0.68 | 0.60 | 0.47 | - | 0.69 | 0.61 | 0.47 | - | 1.00 | 0.64 | 0.50 | - | 1.00 | 0.66 | 0.52 | - | 1.00 | 0.68 | 0.54 | - | 1.00 | 1.00 | 0.59 | - |
| | | ΔT | 17.77 | 16.03 | 12.78 | - | 17.72 | 15.98 | 12.73 | - | 17.96 | 16.22 | 12.97 | - | 17.70 | 15.96 | 12.71 | - | 17.47 | 15.73 | 12.48 | - | 18.56 | 16.82 | 13.57 | - |
| | | kW | 5.50 | 5.50 | 5.49 | - | 6.14 | 6.13 | 6.12 | - | 6.85 | 6.84 | 6.83 | - | 7.62 | 7.61 | 7.60 | - | 8.48 | 8.47 | 8.46 | - | 9.48 | 9.48 | 9.47 | - |
| | | Amps | 21.56 | 21.54 | 21.49 | - | 24.47 | 24.45 | 24.40 | - | 27.72 | 27.70 | 27.65 | - | 31.24 | 31.21 | 31.16 | - | 35.16 | 35.14 | 35.09 | - | 39.77 | 39.75 | 39.70 | - |
| | | Hi PR | 261 | 263 | 264 | - | 302 | 304 | 305 | - | 345 | 346 | 348 | - | 391 | 393 | 394 | - | 441 | 442 | 444 | - | 494 | 495 | 497 | - |
| | | Lo PR | 133 | 135 | 138 | - | 141 | 143 | 146 | - | 148 | 150 | 153 | - | 154 | 156 | 159 | - | 160 | 162 | 165 | - | 167 | 169 | 172 | - |
| | 3375 | MBh | 90.0 | 91.3 | 93.9 | - | 89.2 | 90.5 | 93.1 | - | 87.0 | 88.2 | 90.8 | - | 83.0 | 84.3 | 86.9 | - | 78.2 | 79.5 | 82.1 | - | 73.8 | 75.1 | 77.7 | - |
| | | S/T | 0.72 | 0.64 | 0.50 | - | 1.00 | 0.65 | 0.51 | - | 1.00 | 0.67 | 0.53 | - | 1.00 | 0.69 | 0.55 | - | 1.00 | 1.00 | 0.57 | - | 1.00 | 1.00 | 0.63 | - |
| | | ΔT | 16.88 | 15.14 | 11.89 | - | 16.83 | 15.09 | 11.84 | - | 17.08 | 15.34 | 12.09 | - | 16.82 | 15.08 | 11.83 | - | 16.58 | 14.84 | 11.59 | - | 17.67 | 15.93 | 12.68 | - |
| | | kW | 5.53 | 5.53 | 5.52 | - | 6.17 | 6.16 | 6.15 | - | 6.88 | 6.87 | 6.86 | - | 7.65 | 7.64 | 7.63 | - | 8.50 | 8.50 | 8.49 | - | 9.51 | 9.51 | 9.50 | - |
| | | Amps | 21.69 | 21.66 | 21.61 | - | 24.60 | 24.57 | 24.52 | - | 27.85 | 27.82 | 27.77 | - | 31.36 | 31.34 | 31.29 | - | 35.29 | 35.27 | 35.22 | - | 39.90 | 39.88 | 39.83 | - |
| | | Hi PR | 264 | 265 | 267 | - | 305 | 306 | 307 | - | 347 | 349 | 350 | - | 394 | 395 | 397 | - | 443 | 444 | 446 | - | 496 | 498 | 499 | - |
| | | Lo PR | 135 | 137 | 140 | - | 143 | 145 | 148 | - | 150 | 152 | 155 | - | 156 | 158 | 161 | - | 162 | 164 | 167 | - | 169 | 171 | 174 | - |
| 75 | 2625 | MBh | 87.5 | 88.8 | 91.4 | 95.4 | 86.8 | 88.0 | 90.6 | 94.6 | 84.5 | 85.7 | 88.3 | 92.3 | 80.5 | 81.8 | 84.4 | 88.4 | 75.7 | 77.0 | 79.6 | 83.6 | 71.4 | 72.6 | 75.2 | 79.2 |
| | | S/T | 0.75 | 0.67 | 0.54 | 0.4 | 1.00 | 0.68 | 0.54 | 0.4 | 1.00 | 0.71 | 0.57 | 0.4 | 1.00 | 0.73 | 0.59 | 0.4 | 1.00 | 1.00 | 0.61 | 0.5 | 1.00 | 1.00 | 0.66 | 0.5 |
| | | ΔT | 22.65 | 20.90 | 17.66 | 14.3 | 22.60 | 20.86 | 17.61 | 14.2 | 22.84 | 21.10 | 17.85 | 14.5 | 22.58 | 20.84 | 17.59 | 14.2 | 22.35 | 20.61 | 17.36 | 14.0 | 23.44 | 21.70 | 18.45 | 15.1 |
| | | kW | 5.47 | 5.46 | 5.45 | 5.5 | 6.10 | 6.10 | 6.09 | 6.1 | 6.81 | 6.81 | 6.80 | 6.8 | 7.58 | 7.58 | 7.56 | 7.6 | 8.44 | 8.43 | 8.42 | 8.5 | 9.45 | 9.44 | 9.43 | 9.5 |
| | | Amps | 21.39 | 21.37 | 21.32 | 21.5 | 24.30 | 24.28 | 24.23 | 24.4 | 27.55 | 27.53 | 27.48 | 27.7 | 31.07 | 31.04 | 30.99 | 31.2 | 34.99 | 34.97 | 34.92 | 35.1 | 39.60 | 39.58 | 39.53 | 39.8 |
| | | Hi PR | 260 | 261 | 262 | 267.0 | 300 | 302 | 303 | 307.9 | 343 | 344 | 346 | 350.8 | 389 | 391 | 392 | 396.9 | 439 | 440 | 442 | 446.7 | 492 | 493 | 495 | 499.8 |
| | | Lo PR | 131 | 133 | 136 | 141.9 | 139 | 141 | 144 | 149.8 | 146 | 148 | 151 | 156.8 | 152 | 154 | 157 | 162.7 | 158 | 160 | 163 | 168.6 | 165 | 167 | 170 | 175.8 |
| | 3000 | MBh | 88.7 | 89.9 | 92.5 | 96.5 | 87.9 | 89.1 | 91.8 | 95.8 | 85.6 | 86.9 | 89.5 | 93.5 | 81.7 | 82.9 | 85.5 | 89.5 | 76.9 | 78.1 | 80.7 | 84.7 | 72.5 | 73.7 | 76.4 | 80.3 |
| | | S/T | 1.00 | 0.74 | 0.60 | 0.5 | 1.00 | 0.74 | 0.60 | 0.5 | 1.00 | 0.77 | 0.63 | 0.5 | 1.00 | 1.00 | 0.65 | 0.5 | 1.00 | 1.00 | 0.67 | 0.5 | 1.00 | 1.00 | 0.72 | 0.6 |
| | | ΔT | 21.59 | 19.85 | 16.60 | 13.2 | 21.55 | 19.81 | 16.56 | 13.2 | 21.79 | 20.05 | 16.80 | 13.4 | 21.53 | 19.79 | 16.54 | 13.2 | 21.30 | 19.56 | 16.31 | 12.9 | 22.39 | 20.65 | 17.40 | 14.0 |
| | | kW | 5.50 | 5.49 | 5.48 | 5.5 | 6.14 | 6.13 | 6.12 | 6.2 | 6.85 | 6.84 | 6.83 | 6.9 | 7.61 | 7.61 | 7.60 | 7.6 | 8.47 | 8.47 | 8.46 | 8.5 | 9.48 | 9.47 | 9.46 | 9.5 |
| | | Amps | 21.54 | 21.52 | 21.47 | 21.7 | 24.45 | 24.43 | 24.38 | 24.6 | 27.70 | 27.68 | 27.63 | 27.9 | 31.22 | 31.19 | 31.14 | 31.4 | 35.15 | 35.12 | 35.07 | 35.3 | 39.75 | 39.73 | 39.68 | 39.9 |
| | | Hi PR | 262 | 263 | 265 | 269.2 | 303 | 304 | 306 | 310.1 | 345 | 347 | 348 | 353.0 | 392 | 393 | 395 | 399.1 | 441 | 443 | 444 | 448.9 | 495 | 496 | 497 | 502.0 |
| | | Lo PR | 133 | 135 | 138 | 143.8 | 141 | 143 | 146 | 151.8 | 148 | 150 | 153 | 158.8 | 154 | 156 | 159 | 164.7 | 160 | 162 | 165 | 170.5 | 167 | 169 | 172 | 177.8 |
| | 3375 | MBh | 90.1 | 91.3 | 93.9 | 97.9 | 89.3 | 90.5 | 93.1 | 97.1 | 87.0 | 88.2 | 90.9 | 94.8 | 83.1 | 84.3 | 86.9 | 90.9 | 78.3 | 79.5 | 82.1 | 86.1 | 73.9 | 75.1 | 77.7 | 81.7 |
| | | S/T | 1.00 | 0.77 | 0.63 | 0.5 | 1.00 | 0.78 | 0.64 | 0.5 | 1.00 | 0.80 | 0.66 | 0.5 | 1.00 | 1.00 | 0.68 | 0.5 | 1.00 | 1.00 | 0.71 | 0.6 | 1.00 | 1.00 | 0.76 | 0.6 |
| | | ΔT | 20.71 | 18.97 | 15.72 | 12.4 | 20.66 | 18.92 | 15.67 | 12.3 | 20.91 | 19.17 | 15.92 | 12.5 | 20.64 | 18.90 | 15.65 | 12.3 | 20.41 | 18.67 | 15.42 | 12.1 | 21.50 | 19.76 | 16.51 | 13.1 |
| | | kW | 5.53 | 5.52 | 5.51 | 5.6 | 6.16 | 6.16 | 6.15 | 6.2 | 6.87 | 6.87 | 6.86 | 6.9 | 7.64 | 7.64 | 7.63 | 7.7 | 8.50 | 8.49 | 8.48 | 8.5 | 9.51 | 9.50 | 9.49 | 9.5 |
| | | Amps | 21.67 | 21.64 | 21.59 | 21.8 | 24.58 | 24.55 | 24.50 | 24.7 | 27.83 | 27.80 | 27.75 | 28.0 | 31.34 | 31.32 | 31.27 | 31.5 | 35.27 | 35.25 | 35.20 | 35.4 | 39.88 | 39.86 | 39.81 | 40.0 |
| | | Hi PR | 264 | 265 | 267 | 271.3 | 305 | 306 | 308 | 312.2 | 348 | 349 | 351 | 355.1 | 394 | 395 | 397 | 401.3 | 444 | 445 | 446 | 451.0 | 497 | 498 | 500 | 504.1 |
| | | Lo PR | 135 | 137 | 140 | 145.9 | 143 | 145 | 148 | 153.9 | 150 | 152 | 155 | 160.9 | 156 | 158 | 161 | 166.8 | 162 | 164 | 167 | 172.6 | 169 | 171 | 174 | 179.9 |

**IDB: Entering Indoor Dry Bulb Temperature** Shaded area reflects ACCA (TVA) conditions **kW = Total system power**

**High and low pressures are measured at the liquid and suction access fittings.** **Amps: Unit amps (comp.+ evaporator + condenser fan motors)**

**Design Subcooling, 16 - 19 °F @ the liquid access fitting connection ARI 95 test conditions. Design Superheat 8 - 12°F @ the compressor suction access fitting connection.**

| | | | Outdoor Ambient Temperature | | | | | | | | | | | | | | | | | | | | | | | |
|---|---|---|---|---|---|---|---|---|---|---|---|---|---|---|---|---|---|---|---|---|---|---|---|---|---|---|
| | | | 65 | | | | 75 | | | | 85 | | | | 95 | | | | 105 | | | | 115 | | | |
| | | | Entering Indoor Wet Bulb Temperature | | | | | | | | | | | | | | | | | | | | | | | |
| IDB | Airflow | ID WB | 59 | 63 | 67 | 71 | 59 | 63 | 67 | 71 | 59 | 63 | 67 | 71 | 59 | 63 | 67 | 71 | 59 | 63 | 67 | 71 | 59 | 63 | 67 | 71 |
| 80 | 2625 | MBh | 88.0 | 89.2 | 91.8 | 95.8 | 87.2 | 88.5 | 91.1 | 95.1 | 84.9 | 86.2 | 88.8 | 92.8 | 81.0 | 82.2 | 240.0 | 88.8 | 76.2 | 77.4 | 80.0 | 84.0 | 71.8 | 73.0 | 75.7 | 79.7 |
| | | S/T | 1.00 | 0.80 | 0.66 | 0.5 | 1.00 | 0.81 | 0.67 | 0.5 | 1.00 | 1.00 | 0.70 | 0.6 | 1.00 | 1.00 | 0.72 | 0.6 | 1.00 | 1.00 | 0.74 | 0.6 | 1.00 | 1.00 | 1.00 | 0.6 |
| | | ΔT | 26.50 | 24.76 | 21.51 | 18.1 | 26.45 | 24.71 | 21.46 | 18.1 | 26.70 | 24.95 | 21.71 | 18.3 | 26.43 | 24.69 | 21.44 | 18.1 | 26.20 | 24.46 | 21.21 | 17.8 | 27.29 | 25.55 | 22.30 | 18.9 |
| | | kW | 5.47 | 5.46 | 5.45 | 5.5 | 6.11 | 6.10 | 6.09 | 6.1 | 6.82 | 6.81 | 6.80 | 6.8 | 7.58 | 7.58 | 7.57 | 7.6 | 8.44 | 8.44 | 8.43 | 8.5 | 9.45 | 9.44 | 9.43 | 9.5 |
| | | Amps | 21.40 | 21.38 | 21.33 | 21.6 | 24.32 | 24.29 | 24.24 | 24.5 | 27.56 | 27.54 | 27.49 | 27.7 | 31.08 | 31.06 | 31.01 | 31.2 | 35.01 | 34.99 | 34.94 | 35.2 | 39.62 | 39.60 | 39.55 | 39.8 |
| | | Hi PR | 260 | 261 | 263 | 267.5 | 301 | 302 | 304 | 308.4 | 344 | 345 | 347 | 351.2 | 390 | 391 | 393 | 397.4 | 440 | 441 | 443 | 447.2 | 493 | 494 | 496 | 500.3 |
| | | Lo PR | 132 | 134 | 137 | 142.4 | 140 | 141 | 145 | 150.4 | 147 | 148 | 152 | 157.4 | 153 | 154 | 158 | 163.3 | 159 | 160 | 164 | 169.1 | 166 | 167 | 171 | 176.4 |
| | 3000 | MBh | 89.1 | 90.4 | 93.0 | 97.0 | 88.4 | 89.6 | 92.2 | 96.2 | 86.1 | 87.3 | 89.9 | 93.9 | 82.1 | 83.4 | **86.0** | 90.0 | 77.3 | 78.6 | 81.2 | 85.2 | 73.0 | 74.2 | 76.8 | 80.8 |
| | | S/T | 1.00 | 0.86 | 0.73 | 0.6 | 1.00 | 0.87 | 0.73 | 0.6 | 1.00 | 1.00 | 0.76 | 0.6 | 1.00 | 1.00 | **0.78** | 0.6 | 1.00 | 1.00 | 0.80 | 0.7 | 1.00 | 1.00 | 1.00 | 0.7 |
| | | ΔT | 25.45 | 23.71 | 20.46 | 17.1 | 25.40 | 23.66 | 20.41 | 17.0 | 25.64 | 23.90 | 20.65 | 17.3 | 25.38 | 23.64 | **20.39** | 17.0 | 25.15 | 23.41 | 20.16 | 16.8 | 26.24 | 24.50 | 21.25 | 17.9 |
| | | kW | 5.50 | 5.50 | 5.49 | 5.5 | 6.14 | 6.13 | 6.12 | 6.2 | 6.85 | 6.84 | 6.83 | 6.9 | 7.62 | 7.61 | **7.60** | 7.6 | 8.48 | 8.47 | 8.46 | 8.5 | 9.48 | 9.48 | 9.47 | 9.5 |
| | | Amps | 21.56 | 21.53 | 21.48 | 21.7 | 24.47 | 24.44 | 24.39 | 24.6 | 27.72 | 27.69 | 27.64 | 27.9 | 31.23 | 31.21 | **31.16** | 31.4 | 35.16 | 35.14 | 35.09 | 35.3 | 39.77 | 39.75 | 39.70 | 39.9 |
| | | Hi PR | 262 | 263 | 265 | 269.7 | 303 | 304 | 306 | 310.6 | 346 | 347 | 349 | 353.4 | 392 | 393 | **395** | 399.6 | 442 | 443 | 445 | 449.4 | 495 | 496 | 498 | 502.5 |
| | | Lo PR | 134 | 135 | 139 | 144.4 | 142 | 143 | 147 | 152.4 | 149 | 150 | 154 | 159.3 | 155 | 156 | **160** | 165.3 | 161 | 162 | 165 | 171.1 | 168 | 169 | 173 | 178.3 |
| | 3375 | MBh | 90.5 | 91.8 | 94.4 | 98.4 | 89.7 | 91.0 | 93.6 | 97.6 | 87.5 | 88.7 | 91.3 | 95.3 | 83.5 | 84.8 | 87.4 | 91.4 | 78.7 | 80.0 | 82.6 | 86.6 | 74.3 | 75.6 | 78.2 | 82.2 |
| | | S/T | 1.00 | 0.90 | 0.76 | 0.6 | 1.00 | 1.00 | 0.77 | 0.6 | 1.00 | 1.00 | 0.79 | 0.6 | 1.00 | 1.00 | 0.81 | 0.7 | 1.00 | 1.00 | 1.00 | 0.7 | 1.00 | 1.00 | 1.00 | 0.7 |
| | | ΔT | 24.56 | 22.82 | 19.57 | 16.2 | 24.51 | 22.77 | 19.52 | 16.2 | 24.76 | 23.02 | 19.77 | 16.4 | 24.50 | 22.76 | 19.51 | 16.1 | 24.26 | 22.52 | 19.27 | 15.9 | 25.35 | 23.61 | 20.36 | 17.0 |
| | | kW | 5.53 | 5.53 | 5.51 | 5.6 | 6.17 | 6.16 | 6.15 | 6.2 | 6.88 | 6.87 | 6.86 | 6.9 | 7.64 | 7.64 | 7.63 | 7.7 | 8.50 | 8.50 | 8.49 | 8.5 | 9.51 | 9.51 | 9.49 | 9.5 |
| | | Amps | 21.68 | 21.66 | 21.61 | 21.8 | 24.59 | 24.57 | 24.52 | 24.7 | 27.84 | 27.82 | 27.77 | 28.0 | 31.36 | 31.34 | 31.29 | 31.5 | 35.29 | 35.26 | 35.21 | 35.4 | 39.90 | 39.87 | 39.82 | 40.0 |
| | | Hi PR | 264 | 265 | 267 | 271.8 | 305 | 306 | 308 | 312.7 | 348 | 349 | 351 | 355.6 | 394 | 395 | 397 | 401.7 | 444 | 445 | 447 | 451.5 | 497 | 498 | 500 | 504.6 |
| | | Lo PR | 136 | 138 | 141 | 146.5 | 144 | 146 | 149 | 154.5 | 151 | 153 | 156 | 161.5 | 157 | 158 | 162 | 167.4 | 163 | 164 | 168 | 173.2 | 170 | 172 | 175 | 180.5 |
| 85 | 2625 | MBh | 89.5 | 90.7 | 93.3 | 97.3 | 88.7 | 89.9 | 92.5 | 96.5 | 86.4 | 87.6 | 90.3 | 94.2 | 82.5 | 83.7 | 86.3 | 90.3 | 77.7 | 78.9 | 81.5 | 85.5 | 73.3 | 74.5 | 77.1 | 81.1 |
| | | S/T | 1.00 | 0.91 | 0.77 | 0.6 | 1.00 | 1.00 | 0.77 | 0.6 | 1.00 | 1.00 | 0.80 | 0.7 | 1.00 | 1.00 | 1.00 | 0.7 | 1.00 | 1.00 | 1.00 | 0.7 | 1.00 | 1.00 | 1.00 | 0.7 |
| | | ΔT | 29.91 | 28.17 | 24.92 | 21.6 | 29.87 | 28.13 | 24.88 | 21.5 | 30.11 | 28.37 | 25.12 | 21.8 | 29.85 | 28.11 | 24.86 | 21.5 | 29.62 | 27.88 | 24.63 | 21.3 | 30.71 | 28.97 | 25.72 | 22.4 |
| | | kW | 5.48 | 5.48 | 5.47 | 5.5 | 6.12 | 6.11 | 6.10 | 6.2 | 6.83 | 6.82 | 6.81 | 6.9 | 7.60 | 7.59 | 7.58 | 7.6 | 8.45 | 8.45 | 8.44 | 8.5 | 9.46 | 9.46 | 9.45 | 9.5 |
| | | Amps | 21.46 | 21.44 | 21.39 | 21.6 | 24.37 | 24.35 | 24.30 | 24.5 | 27.62 | 27.60 | 27.55 | 27.8 | 31.14 | 31.11 | 31.06 | 31.3 | 35.07 | 35.04 | 34.99 | 35.2 | 39.67 | 39.65 | 39.60 | 39.8 |
| | | Hi PR | 261 | 262 | 264 | 268.7 | 302 | 303 | 305 | 309.6 | 345 | 346 | 348 | 352.5 | 391 | 392 | 394 | 398.6 | 441 | 442 | 444 | 448.4 | 494 | 495 | 497 | 501.5 |
| | | Lo PR | 134 | 135 | 139 | 144.4 | 142 | 143 | 147 | 152.4 | 149 | 150 | 154 | 159.4 | 155 | 156 | 160 | 165.3 | 161 | 162 | 166 | 171.1 | 168 | 169 | 173 | 178.4 |
| | 3000 | MBh | 90.6 | 91.9 | 94.5 | 98.5 | 89.8 | 91.1 | 93.7 | 97.7 | 87.6 | 88.8 | 91.4 | 95.4 | 83.6 | 84.9 | 87.5 | 91.5 | 78.8 | 80.1 | 82.7 | 86.7 | 74.4 | 75.7 | 78.3 | 82.3 |
| | | S/T | 1.00 | 1.00 | 0.83 | 0.7 | 1.00 | 1.00 | 0.84 | 0.7 | 1.00 | 1.00 | 0.86 | 0.7 | 1.00 | 1.00 | 1.00 | 0.7 | 1.00 | 1.00 | 1.00 | 0.8 | 1.00 | 1.00 | 1.00 | 0.8 |
| | | ΔT | 28.86 | 27.12 | 23.87 | 20.5 | 28.82 | 27.08 | 23.83 | 20.5 | 29.06 | 27.32 | 24.07 | 20.7 | 28.80 | 27.06 | 23.81 | 20.4 | 28.57 | 26.83 | 23.58 | 20.2 | 29.66 | 27.91 | 24.67 | 21.3 |
| | | kW | 5.52 | 5.51 | 5.50 | 5.5 | 6.15 | 6.15 | 6.14 | 6.2 | 6.86 | 6.86 | 6.85 | 6.9 | 7.63 | 7.62 | 7.61 | 7.7 | 8.49 | 8.48 | 8.47 | 8.5 | 9.49 | 9.49 | 9.48 | 9.5 |
| | | Amps | 21.61 | 21.59 | 21.54 | 21.8 | 24.52 | 24.50 | 24.45 | 24.7 | 27.77 | 27.75 | 27.70 | 27.9 | 31.29 | 31.26 | 31.21 | 31.4 | 35.22 | 35.19 | 35.14 | 35.4 | 39.83 | 39.80 | 39.75 | 40.0 |
| | | Hi PR | 263 | 265 | 266 | 270.9 | 304 | 305 | 307 | 311.8 | 347 | 348 | 350 | 354.7 | 393 | 394 | 396 | 400.8 | 443 | 444 | 446 | 450.6 | 496 | 497 | 499 | 503.7 |
| | | Lo PR | 136 | 137 | 141 | 146.3 | 144 | 145 | 149 | 154.3 | 151 | 152 | 156 | 161.3 | 157 | 158 | 162 | 167.2 | 162 | 164 | 167 | 173.0 | 170 | 171 | 175 | 180.3 |
| | 3375 | MBh | 92.0 | 93.2 | 95.9 | 99.8 | 91.2 | 92.5 | 95.1 | 99.1 | 88.9 | 90.2 | 92.8 | 96.8 | 85.0 | 86.2 | 88.9 | 92.8 | 80.2 | 81.4 | 84.1 | 88.0 | 75.8 | 77.1 | 79.7 | 83.7 |
| | | S/T | 1.00 | 1.00 | 0.86 | 0.7 | 1.00 | 1.00 | 0.87 | 0.7 | 1.00 | 1.00 | 0.90 | 0.7 | 1.00 | 1.00 | 1.00 | 0.8 | 1.00 | 1.00 | 1.00 | 0.8 | 1.00 | 1.00 | 1.00 | 1.0 |
| | | ΔT | 27.98 | 26.24 | 22.99 | 19.6 | 27.93 | 26.19 | 22.94 | 19.6 | 28.18 | 26.43 | 23.19 | 19.8 | 27.91 | 26.17 | 22.92 | 19.6 | 27.68 | 25.94 | 22.69 | 19.3 | 28.77 | 27.03 | 23.78 | 20.4 |
| | | kW | 5.54 | 5.54 | 5.53 | 5.6 | 6.18 | 6.17 | 6.16 | 6.2 | 6.89 | 6.88 | 6.87 | 6.9 | 7.66 | 7.65 | 7.64 | 7.7 | 8.52 | 8.51 | 8.50 | 8.5 | 9.52 | 9.52 | 9.51 | 9.6 |
| | | Amps | 21.74 | 21.71 | 21.66 | 21.9 | 24.65 | 24.63 | 24.58 | 24.8 | 27.90 | 27.87 | 27.83 | 28.0 | 31.41 | 31.39 | 31.34 | 31.6 | 35.34 | 35.32 | 35.27 | 35.5 | 39.95 | 39.93 | 39.88 | 40.1 |
| | | Hi PR | 266 | 267 | 268 | 273.0 | 306 | 308 | 309 | 313.9 | 349 | 350 | 352 | 356.8 | 395 | 397 | 398 | 402.9 | 445 | 446 | 448 | 452.7 | 498 | 499 | 501 | 505.8 |
| | | Lo PR | 138 | 140 | 143 | 148.5 | 146 | 148 | 151 | 156.5 | 153 | 155 | 158 | 163.5 | 159 | 160 | 164 | 169.4 | 165 | 166 | 170 | 175.2 | 172 | 174 | 177 | 182.4 |

**IDB: Entering Indoor Dry Bulb Temperature** Shaded area reflects ACCA (TVA) conditions **kW = Total system power**

**High and low pressures are measured at the liquid and suction access fittings.** **Amps: Unit amps (comp.+ evaporator + condenser fan motors)**

**Design Subcooling, 16 - 19 °F @ the liquid access fitting connection ARI 95 test conditions. Design Superheat 8 - 12°F @ the compressor suction access fitting connection.**

| | | | Outdoor Ambient Temperature | | | | | | | | | | | | | | | | | | | | | | | |
|---|---|---|---|---|---|---|---|---|---|---|---|---|---|---|---|---|---|---|---|---|---|---|---|---|---|---|
| | | | 65 | | | | 75 | | | | 85 | | | | 95 | | | | 105 | | | | 115 | | | |
| | | | Entering Indoor Wet Bulb Temperature | | | | | | | | | | | | | | | | | | | | | | | |
| IDB | Airflow | ID WB | 59 | 63 | 67 | 71 | 59 | 63 | 67 | 71 | 59 | 63 | 67 | 71 | 59 | 63 | 67 | 71 | 59 | 63 | 67 | 71 | 59 | 63 | 67 | 71 |
| 70 | 2625 | MBh | 99.7 | 101.1 | 104.1 | - | 98.8 | 100.2 | 103.2 | - | 96.2 | 97.6 | 100.6 | - | 91.7 | 93.1 | 96.1 | - | 86.3 | 87.7 | 90.6 | - | 81.3 | 82.7 | 85.6 | - |
| | | S/T | 0.58 | 0.51 | 0.38 | - | 0.59 | 0.52 | 0.39 | - | 1.00 | 0.54 | 0.41 | - | 1.00 | 0.56 | 0.43 | - | 1.00 | 0.58 | 0.45 | - | 1.00 | 1.00 | 0.50 | - |
| | | ΔT | 21.03 | 19.09 | 15.46 | - | 20.98 | 19.04 | 15.40 | - | 21.25 | 19.31 | 15.68 | - | 20.96 | 19.02 | 15.38 | - | 20.70 | 18.76 | 15.12 | - | 21.92 | 19.97 | 16.34 | - |
| | | kW | 6.20 | 6.20 | 6.19 | - | 6.94 | 6.93 | 6.92 | - | 7.76 | 7.75 | 7.74 | - | 8.64 | 8.64 | 8.63 | - | 9.63 | 9.63 | 9.62 | - | 10.80 | 10.79 | 10.78 | - |
| | | Amps | 24.96 | 24.93 | 24.87 | - | 28.31 | 28.29 | 28.23 | - | 32.06 | 32.04 | 31.98 | - | 36.12 | 36.10 | 36.04 | - | 40.66 | 40.63 | 40.57 | - | 45.97 | 45.95 | 45.89 | - |
| | | Hi PR | 264 | 265 | 267 | - | 305 | 306 | 308 | - | 349 | 350 | 352 | - | 396 | 397 | 399 | - | 446 | 448 | 449 | - | 500 | 502 | 503 | - |
| | | Lo PR | 131 | 132 | 136 | - | 139 | 140 | 144 | - | 146 | 147 | 151 | - | 151 | 153 | 156 | - | 157 | 159 | 162 | - | 165 | 166 | 169 | - |
| | 3000 | MBh | 101.0 | 102.4 | 105.4 | - | 100.1 | 101.5 | 104.5 | - | 97.5 | 98.9 | 101.9 | - | 93.0 | 94.4 | 97.4 | - | 87.6 | 89.0 | 92.0 | - | 82.6 | 84.0 | 87.0 | - |
| | | S/T | 0.64 | 0.57 | 0.44 | - | 0.65 | 0.57 | 0.44 | - | 1.00 | 0.60 | 0.47 | - | 1.00 | 0.62 | 0.49 | - | 1.00 | 0.64 | 0.51 | - | 1.00 | 1.00 | 0.56 | - |
| | | ΔT | 19.86 | 17.91 | 14.28 | - | 19.81 | 17.86 | 14.23 | - | 20.08 | 18.13 | 14.50 | - | 19.79 | 17.84 | 14.21 | - | 19.53 | 17.58 | 13.95 | - | 20.74 | 18.80 | 15.17 | - |
| | | kW | 6.24 | 6.24 | 6.22 | - | 6.98 | 6.97 | 6.96 | - | 7.80 | 7.79 | 7.78 | - | 8.68 | 8.68 | 8.66 | - | 9.67 | 9.67 | 9.65 | - | 10.83 | 10.83 | 10.82 | - |
| | | Amps | 25.13 | 25.10 | 25.05 | - | 28.49 | 28.46 | 28.41 | - | 32.24 | 32.21 | 32.15 | - | 36.30 | 36.27 | 36.21 | - | 40.83 | 40.80 | 40.75 | - | 46.15 | 46.12 | 46.07 | - |
| | | Hi PR | 266 | 267 | 269 | - | 308 | 309 | 311 | - | 351 | 352 | 354 | - | 398 | 399 | 401 | - | 449 | 450 | 452 | - | 503 | 504 | 506 | - |
| | | Lo PR | 133 | 134 | 138 | - | 141 | 142 | 146 | - | 148 | 149 | 152 | - | 153 | 155 | 158 | - | 159 | 161 | 164 | - | 166 | 168 | 171 | - |
| | 3375 | MBh | 102.6 | 104.0 | 107.0 | - | 101.7 | 103.1 | 106.1 | - | 99.1 | 100.5 | 103.5 | - | 94.6 | 96.0 | 99.0 | - | 89.1 | 90.5 | 93.5 | - | 84.1 | 85.5 | 88.5 | - |
| | | S/T | 0.67 | 0.60 | 0.47 | - | 0.68 | 0.61 | 0.48 | - | 1.00 | 0.63 | 0.50 | - | 1.00 | 0.65 | 0.52 | - | 1.00 | 0.67 | 0.54 | - | 1.00 | 1.00 | 0.59 | - |
| | | ΔT | 18.87 | 16.92 | 13.29 | - | 18.82 | 16.87 | 13.24 | - | 19.09 | 17.14 | 13.51 | - | 18.80 | 16.85 | 13.22 | - | 18.54 | 16.59 | 12.96 | - | 19.75 | 17.81 | 14.18 | - |
| | | kW | 6.27 | 6.27 | 6.26 | - | 7.01 | 7.00 | 6.99 | - | 7.83 | 7.82 | 7.81 | - | 8.71 | 8.71 | 8.70 | - | 9.70 | 9.70 | 9.69 | - | 10.87 | 10.86 | 10.85 | - |
| | | Amps | 25.28 | 25.25 | 25.19 | - | 28.64 | 28.61 | 28.55 | - | 32.38 | 32.36 | 32.30 | - | 36.44 | 36.42 | 36.36 | - | 40.98 | 40.95 | 40.89 | - | 46.30 | 46.27 | 46.21 | - |
| | | Hi PR | 268 | 269 | 271 | - | 310 | 311 | 313 | - | 353 | 354 | 356 | - | 400 | 401 | 403 | - | 451 | 452 | 454 | - | 505 | 506 | 508 | - |
| | | Lo PR | 135 | 136 | 140 | - | 143 | 144 | 148 | - | 150 | 151 | 155 | - | 156 | 157 | 160 | - | 161 | 163 | 166 | - | 169 | 170 | 173 | - |
| 75 | 2625 | MBh | 99.8 | 101.2 | 104.1 | 108.7 | 98.9 | 100.3 | 103.3 | 107.8 | 96.3 | 97.7 | 100.7 | 105.2 | 91.8 | 93.2 | 96.2 | 100.7 | 86.3 | 87.7 | 90.7 | 95.2 | 81.3 | 82.7 | 85.7 | 90.3 |
| | | S/T | 0.71 | 0.63 | 0.50 | 0.4 | 1.00 | 0.64 | 0.51 | 0.4 | 1.00 | 0.66 | 0.53 | 0.4 | 1.00 | 0.68 | 0.55 | 0.4 | 1.00 | 1.00 | 0.57 | 0.4 | 1.00 | 1.00 | 0.62 | 0.5 |
| | | ΔT | 25.31 | 23.37 | 19.73 | 16.0 | 25.26 | 23.31 | 19.68 | 15.9 | 25.53 | 23.59 | 19.95 | 16.2 | 25.24 | 23.29 | 19.66 | 15.9 | 24.98 | 23.03 | 19.40 | 15.6 | 26.20 | 24.25 | 20.62 | 16.9 |
| | | kW | 6.20 | 6.19 | 6.18 | 6.2 | 6.93 | 6.93 | 6.91 | 7.0 | 7.75 | 7.75 | 7.73 | 7.8 | 8.64 | 8.63 | 8.62 | 8.7 | 9.63 | 9.62 | 9.61 | 9.7 | 10.79 | 10.79 | 10.77 | 10.8 |
| | | Amps | 24.93 | 24.91 | 24.85 | 25.1 | 28.29 | 28.27 | 28.21 | 28.5 | 32.04 | 32.02 | 31.96 | 32.2 | 36.10 | 36.07 | 36.02 | 36.3 | 40.63 | 40.61 | 40.55 | 40.8 | 45.95 | 45.93 | 45.87 | 46.1 |
| | | Hi PR | 264 | 265 | 267 | 271.5 | 306 | 307 | 309 | 313.2 | 349 | 350 | 352 | 356.7 | 396 | 397 | 399 | 403.7 | 447 | 448 | 450 | 454.3 | 501 | 502 | 504 | 508.3 |
| | | Lo PR | 131 | 132 | 136 | 141.2 | 139 | 140 | 144 | 149.2 | 146 | 147 | 151 | 156.1 | 152 | 153 | 156 | 162.0 | 157 | 159 | 162 | 167.8 | 165 | 166 | 169 | 175.0 |
| | 3000 | MBh | 101.1 | 102.5 | 105.5 | 110.0 | 100.2 | 101.6 | 104.6 | 109.1 | 97.6 | 99.0 | 102.0 | 106.5 | 93.1 | 94.5 | 97.5 | 102.0 | 87.6 | 89.0 | 92.0 | 96.6 | 82.6 | 84.0 | 87.0 | 91.6 |
| | | S/T | 0.76 | 0.69 | 0.56 | 0.4 | 1.00 | 0.70 | 0.57 | 0.4 | 1.00 | 0.72 | 0.59 | 0.5 | 1.00 | 1.00 | 0.61 | 0.5 | 1.00 | 1.00 | 0.63 | 0.5 | 1.00 | 1.00 | 0.68 | 0.5 |
| | | ΔT | 24.14 | 22.19 | 18.56 | 14.8 | 24.08 | 22.14 | 18.51 | 14.7 | 24.36 | 22.41 | 18.78 | 15.0 | 24.06 | 22.12 | 18.49 | 14.7 | 23.80 | 21.86 | 18.23 | 14.5 | 25.02 | 23.08 | 19.44 | 15.7 |
| | | kW | 6.24 | 6.23 | 6.22 | 6.3 | 6.97 | 6.97 | 6.95 | 7.0 | 7.79 | 7.78 | 7.77 | 7.8 | 8.68 | 8.67 | 8.66 | 8.7 | 9.67 | 9.66 | 9.65 | 9.7 | 10.83 | 10.82 | 10.81 | 10.9 |
| | | Amps | 25.11 | 25.08 | 25.02 | 25.3 | 28.47 | 28.44 | 28.38 | 28.6 | 32.22 | 32.19 | 32.13 | 32.4 | 36.27 | 36.25 | 36.19 | 36.4 | 40.81 | 40.78 | 40.72 | 41.0 | 46.13 | 46.10 | 46.04 | 46.3 |
| | | Hi PR | 266 | 267 | 269 | 273.8 | 308 | 309 | 311 | 315.4 | 351 | 353 | 354 | 359.0 | 398 | 399 | 401 | 405.9 | 449 | 450 | 452 | 456.5 | 503 | 504 | 506 | 510.6 |
| | | Lo PR | 133 | 134 | 138 | 143.1 | 141 | 142 | 146 | 151.1 | 148 | 149 | 152 | 158.1 | 153 | 155 | 158 | 163.9 | 159 | 161 | 164 | 169.7 | 166 | 168 | 171 | 177.0 |
| | 3375 | MBh | 102.6 | 104.1 | 107.0 | 111.6 | 101.8 | 103.2 | 106.1 | 110.7 | 99.1 | 100.6 | 103.5 | 108.1 | 94.7 | 96.1 | 99.1 | 103.6 | 89.2 | 90.6 | 93.6 | 98.1 | 84.2 | 85.6 | 88.6 | 93.1 |
| | | S/T | 1.00 | 0.72 | 0.59 | 0.5 | 1.00 | 0.73 | 0.60 | 0.5 | 1.00 | 0.75 | 0.62 | 0.5 | 1.00 | 1.00 | 0.64 | 0.5 | 1.00 | 1.00 | 0.66 | 0.5 | 1.00 | 1.00 | 0.71 | 0.6 |
| | | ΔT | 23.15 | 21.20 | 17.57 | 13.8 | 23.09 | 21.15 | 17.52 | 13.8 | 23.37 | 21.42 | 17.79 | 14.0 | 23.07 | 21.13 | 17.50 | 13.7 | 22.81 | 20.87 | 17.24 | 13.5 | 24.03 | 22.09 | 18.45 | 14.7 |
| | | kW | 6.27 | 6.26 | 6.25 | 6.3 | 7.00 | 7.00 | 6.98 | 7.0 | 7.82 | 7.82 | 7.80 | 7.9 | 8.71 | 8.70 | 8.69 | 8.7 | 9.70 | 9.69 | 9.68 | 9.7 | 10.86 | 10.86 | 10.84 | 10.9 |
| | | Amps | 25.25 | 25.23 | 25.17 | 25.4 | 28.61 | 28.59 | 28.53 | 28.8 | 32.36 | 32.34 | 32.28 | 32.5 | 36.42 | 36.39 | 36.34 | 36.6 | 40.95 | 40.93 | 40.87 | 41.1 | 46.27 | 46.25 | 46.19 | 46.4 |
| | | Hi PR | 268 | 270 | 271 | 276.0 | 310 | 311 | 313 | 317.6 | 354 | 355 | 357 | 361.2 | 401 | 402 | 404 | 408.1 | 451 | 452 | 454 | 458.7 | 505 | 506 | 508 | 512.7 |
| | | Lo PR | 135 | 136 | 140 | 145.3 | 143 | 144 | 148 | 153.2 | 150 | 151 | 155 | 160.2 | 156 | 157 | 161 | 166.1 | 161 | 163 | 166 | 171.9 | 169 | 170 | 174 | 179.1 |

**IDB: Entering Indoor Dry Bulb Temperature** Shaded area reflects ACCA (TVA) conditions **kW = Total system power**

**High and low pressures are measured at the liquid and suction access fittings.** **Amps: Unit amps (comp.+ evaporator + condenser fan motors)**

**Design Subcooling, 16 - 19 °F @ the liquid access fitting connection ARI 95 test conditions. Design Superheat 8 - 12°F @ the compressor suction access fitting connection.**

| | | | Outdoor Ambient Temperature | | | | | | | | | | | | | | | | | | | | | | | |
|---|---|---|---|---|---|---|---|---|---|---|---|---|---|---|---|---|---|---|---|---|---|---|---|---|---|---|
| | | | 65 | | | | 75 | | | | 85 | | | | 95 | | | | 105 | | | | 115 | | | |
| | | | Entering Indoor Wet Bulb Temperature | | | | | | | | | | | | | | | | | | | | | | | |
| IDB | Airflow | ID WB | 59 | 63 | 67 | 71 | 59 | 63 | 67 | 71 | 59 | 63 | 67 | 71 | 59 | 63 | 67 | 71 | 59 | 63 | 67 | 71 | 59 | 63 | 67 | 71 |
| 80 | 2625 | MBh | 100.3 | 101.7 | 104.7 | 109.2 | 99.4 | 100.8 | 103.8 | 108.3 | 96.8 | 98.2 | 101.2 | 105.7 | 92.3 | 93.7 | 240.0 | 101.2 | 86.8 | 88.2 | 91.2 | 95.8 | 81.8 | 83.2 | 86.2 | 90.8 |
| | | S/T | 1.00 | 0.75 | 0.62 | 0.5 | 1.00 | 0.76 | 0.63 | 0.5 | 1.00 | 1.00 | 0.65 | 0.5 | 1.00 | 1.00 | 0.67 | 0.5 | 1.00 | 1.00 | 0.69 | 0.6 | 1.00 | 1.00 | 1.00 | 0.6 |
| | | ΔT | 29.62 | 27.67 | 24.04 | 20.3 | 29.56 | 27.62 | 23.99 | 20.2 | 29.84 | 27.89 | 24.26 | 20.5 | 29.54 | 27.60 | 23.97 | 20.2 | 29.28 | 27.34 | 23.71 | 19.9 | 30.50 | 28.56 | 24.93 | 21.2 |
| | | kW | 6.20 | 6.20 | 6.18 | 6.2 | 6.94 | 6.93 | 6.92 | 7.0 | 7.76 | 7.75 | 7.74 | 7.8 | 8.64 | 8.64 | 8.62 | 8.7 | 9.63 | 9.63 | 9.62 | 9.7 | 10.80 | 10.79 | 10.78 | 10.8 |
| | | Amps | 24.95 | 24.93 | 24.87 | 25.1 | 28.31 | 28.28 | 28.23 | 28.5 | 32.06 | 32.03 | 31.98 | 32.2 | 36.12 | 36.09 | 36.03 | 36.3 | 40.65 | 40.63 | 40.57 | 40.8 | 45.97 | 45.94 | 45.89 | 46.1 |
| | | Hi PR | 264 | 266 | 267 | 272.0 | 306 | 307 | 309 | 313.6 | 350 | 351 | 353 | 357.2 | 397 | 398 | 400 | 404.2 | 447 | 448 | 450 | 454.8 | 501 | 502 | 504 | 508.8 |
| | | Lo PR | 131 | 133 | 136 | 141.8 | 139 | 141 | 144 | 149.8 | 146 | 148 | 151 | 156.7 | 152 | 154 | 157 | 162.6 | 158 | 159 | 163 | 168.4 | 165 | 167 | 170 | 175.6 |
| | 3000 | MBh | 101.6 | 103.0 | 106.0 | 110.5 | 100.7 | 102.1 | 105.1 | 109.6 | 98.1 | 99.5 | 102.5 | 107.0 | 93.6 | 95.0 | **98.0** | 102.5 | 88.1 | 89.5 | 92.5 | 97.1 | 83.1 | 84.5 | 87.5 | 92.1 |
| | | S/T | 1.00 | 0.81 | 0.68 | 0.5 | 1.00 | 0.82 | 0.69 | 0.6 | 1.00 | 1.00 | 0.71 | 0.6 | 1.00 | 1.00 | **0.73** | 0.6 | 1.00 | 1.00 | 0.75 | 0.6 | 1.00 | 1.00 | 1.00 | 0.7 |
| | | ΔT | 28.44 | 26.50 | 22.87 | 19.1 | 28.39 | 26.44 | 22.81 | 19.0 | 28.66 | 26.72 | 23.09 | 19.3 | 28.37 | 26.42 | **22.79** | 19.0 | 28.11 | 26.16 | 22.53 | 18.8 | 29.33 | 27.38 | 23.75 | 20.0 |
| | | kW | 6.24 | 6.24 | 6.22 | 6.3 | 6.98 | 6.97 | 6.96 | 7.0 | 7.79 | 7.79 | 7.78 | 7.8 | 8.68 | 8.68 | **8.66** | 8.7 | 9.67 | 9.67 | 9.65 | 9.7 | 10.83 | 10.83 | 10.82 | 10.9 |
| | | Amps | 25.13 | 25.10 | 25.04 | 25.3 | 28.48 | 28.46 | 28.40 | 28.7 | 32.23 | 32.21 | 32.15 | 32.4 | 36.29 | 36.27 | **36.21** | 36.5 | 40.83 | 40.80 | 40.74 | 41.0 | 46.14 | 46.12 | 46.06 | 46.3 |
| | | Hi PR | 267 | 268 | 270 | 274.3 | 308 | 309 | 311 | 315.9 | 352 | 353 | 355 | 359.5 | 399 | 400 | **402** | 406.4 | 449 | 451 | 452 | 457.0 | 503 | 505 | 506 | 511.0 |
| | | Lo PR | 133 | 135 | 138 | 143.7 | 141 | 143 | 146 | 151.7 | 148 | 150 | 153 | 158.6 | 154 | 156 | **159** | 164.5 | 160 | 161 | 165 | 170.3 | 167 | 169 | 172 | 177.5 |
| | 3375 | MBh | 103.2 | 104.6 | 107.5 | 112.1 | 102.3 | 103.7 | 106.7 | 111.2 | 99.7 | 101.1 | 104.1 | 108.6 | 95.2 | 96.6 | 99.6 | 104.1 | 89.7 | 91.1 | 94.1 | 98.6 | 84.7 | 86.1 | 89.1 | 93.7 |
| | | S/T | 1.00 | 0.84 | 0.71 | 0.6 | 1.00 | 0.85 | 0.72 | 0.6 | 1.00 | 1.00 | 0.74 | 0.6 | 1.00 | 1.00 | 0.76 | 0.6 | 1.00 | 1.00 | 0.78 | 0.6 | 1.00 | 1.00 | 1.00 | 0.7 |
| | | ΔT | 27.45 | 25.51 | 21.88 | 18.1 | 27.40 | 25.45 | 21.82 | 18.1 | 27.67 | 25.73 | 22.10 | 18.3 | 27.38 | 25.43 | 21.80 | 18.0 | 27.12 | 25.17 | 21.54 | 17.8 | 28.34 | 26.39 | 22.76 | 19.0 |
| | | kW | 6.27 | 6.27 | 6.25 | 6.3 | 7.01 | 7.00 | 6.99 | 7.0 | 7.83 | 7.82 | 7.81 | 7.9 | 8.71 | 8.71 | 8.69 | 8.8 | 9.70 | 9.70 | 9.69 | 9.7 | 10.87 | 10.86 | 10.85 | 10.9 |
| | | Amps | 25.27 | 25.25 | 25.19 | 25.4 | 28.63 | 28.60 | 28.55 | 28.8 | 32.38 | 32.35 | 32.30 | 32.6 | 36.44 | 36.41 | 36.35 | 36.6 | 40.97 | 40.95 | 40.89 | 41.1 | 46.29 | 46.26 | 46.21 | 46.5 |
| | | Hi PR | 269 | 270 | 272 | 276.4 | 310 | 312 | 313 | 318.1 | 354 | 355 | 357 | 361.6 | 401 | 402 | 404 | 408.6 | 452 | 453 | 455 | 459.2 | 506 | 507 | 509 | 513.2 |
| | | Lo PR | 135 | 137 | 140 | 145.9 | 143 | 145 | 148 | 153.8 | 150 | 152 | 155 | 160.8 | 156 | 158 | 161 | 166.7 | 162 | 164 | 167 | 172.4 | 169 | 171 | 174 | 179.7 |
| 85 | 2625 | MBh | 102.0 | 103.4 | 106.3 | 110.9 | 101.1 | 102.5 | 105.5 | 110.0 | 98.5 | 99.9 | 102.8 | 107.4 | 94.0 | 95.4 | 98.4 | 102.9 | 88.5 | 89.9 | 92.9 | 97.4 | 83.5 | 84.9 | 87.9 | 92.4 |
| | | S/T | 1.00 | 0.85 | 0.72 | 0.6 | 1.00 | 1.00 | 0.73 | 0.6 | 1.00 | 1.00 | 0.75 | 0.6 | 1.00 | 1.00 | 1.00 | 0.6 | 1.00 | 1.00 | 1.00 | 0.7 | 1.00 | 1.00 | 1.00 | 0.7 |
| | | ΔT | 33.44 | 31.49 | 27.86 | 24.1 | 33.38 | 31.44 | 27.81 | 24.0 | 33.66 | 31.71 | 28.08 | 24.3 | 33.36 | 31.42 | 27.79 | 24.0 | 33.10 | 31.16 | 27.53 | 23.8 | 34.32 | 32.38 | 28.74 | 25.0 |
| | | kW | 6.22 | 6.21 | 6.20 | 6.3 | 6.95 | 6.95 | 6.93 | 7.0 | 7.77 | 7.76 | 7.75 | 7.8 | 8.66 | 8.65 | 8.64 | 8.7 | 9.65 | 9.64 | 9.63 | 9.7 | 10.81 | 10.80 | 10.79 | 10.8 |
| | | Amps | 25.02 | 24.99 | 24.93 | 25.2 | 28.37 | 28.35 | 28.29 | 28.5 | 32.12 | 32.10 | 32.04 | 32.3 | 36.18 | 36.16 | 36.10 | 36.4 | 40.72 | 40.69 | 40.63 | 40.9 | 46.03 | 46.01 | 45.95 | 46.2 |
| | | Hi PR | 266 | 267 | 269 | 273.3 | 307 | 308 | 310 | 314.9 | 351 | 352 | 354 | 358.5 | 398 | 399 | 401 | 405.4 | 448 | 450 | 451 | 456.0 | 502 | 504 | 505 | 510.0 |
| | | Lo PR | 133 | 135 | 138 | 143.8 | 141 | 143 | 146 | 151.7 | 148 | 150 | 153 | 158.7 | 154 | 156 | 159 | 164.6 | 160 | 161 | 165 | 170.3 | 167 | 169 | 172 | 177.6 |
| | 3000 | MBh | 103.3 | 104.7 | 107.7 | 112.2 | 102.4 | 103.8 | 106.8 | 111.3 | 99.8 | 101.2 | 104.2 | 108.7 | 95.3 | 96.7 | 99.7 | 104.2 | 89.8 | 91.2 | 94.2 | 98.8 | 84.8 | 86.2 | 89.2 | 93.8 |
| | | S/T | 1.00 | 1.00 | 0.78 | 0.6 | 1.00 | 1.00 | 0.78 | 0.6 | 1.00 | 1.00 | 0.81 | 0.7 | 1.00 | 1.00 | 1.00 | 0.7 | 1.00 | 1.00 | 1.00 | 0.7 | 1.00 | 1.00 | 1.00 | 0.8 |
| | | ΔT | 32.26 | 30.32 | 26.68 | 22.9 | 32.21 | 30.26 | 26.63 | 22.9 | 32.48 | 30.54 | 26.90 | 23.1 | 32.19 | 30.24 | 26.61 | 22.8 | 31.93 | 29.98 | 26.35 | 22.6 | 33.15 | 31.20 | 27.57 | 23.8 |
| | | kW | 6.26 | 6.25 | 6.24 | 6.3 | 6.99 | 6.98 | 6.97 | 7.0 | 7.81 | 7.80 | 7.79 | 7.8 | 8.70 | 8.69 | 8.68 | 8.7 | 9.69 | 9.68 | 9.67 | 9.7 | 10.85 | 10.84 | 10.83 | 10.9 |
| | | Amps | 25.19 | 25.16 | 25.11 | 25.4 | 28.55 | 28.52 | 28.47 | 28.7 | 32.30 | 32.27 | 32.21 | 32.5 | 36.36 | 36.33 | 36.27 | 36.5 | 40.89 | 40.86 | 40.81 | 41.1 | 46.21 | 46.18 | 46.13 | 46.4 |
| | | Hi PR | 268 | 269 | 271 | 275.5 | 310 | 311 | 313 | 317.1 | 353 | 354 | 356 | 360.7 | 400 | 401 | 403 | 407.7 | 451 | 452 | 454 | 458.3 | 505 | 506 | 508 | 512.3 |
| | | Lo PR | 135 | 137 | 140 | 145.7 | 143 | 145 | 148 | 153.6 | 150 | 152 | 155 | 160.6 | 156 | 158 | 161 | 166.5 | 162 | 163 | 167 | 172.3 | 169 | 171 | 174 | 179.5 |
| | 3375 | MBh | 104.8 | 106.2 | 109.2 | 113.8 | 103.9 | 105.4 | 108.3 | 112.9 | 101.3 | 102.8 | 105.7 | 110.3 | 96.9 | 98.3 | 101.3 | 105.8 | 91.4 | 92.8 | 95.8 | 100.3 | 86.4 | 87.8 | 90.8 | 95.3 |
| | | S/T | 1.00 | 1.00 | 0.81 | 0.7 | 1.00 | 1.00 | 0.82 | 0.7 | 1.00 | 1.00 | 0.84 | 0.7 | 1.00 | 1.00 | 1.00 | 0.7 | 1.00 | 1.00 | 1.00 | 0.7 | 1.00 | 1.00 | 1.00 | 1.0 |
| | | ΔT | 31.27 | 29.33 | 25.69 | 21.9 | 31.22 | 29.27 | 25.64 | 21.9 | 31.49 | 29.55 | 25.92 | 22.2 | 31.20 | 29.25 | 25.62 | 21.9 | 30.94 | 28.99 | 25.36 | 21.6 | 32.16 | 30.21 | 26.58 | 22.8 |
| | | kW | 6.29 | 6.28 | 6.27 | 6.3 | 7.02 | 7.02 | 7.00 | 7.1 | 7.84 | 7.83 | 7.82 | 7.9 | 8.73 | 8.72 | 8.71 | 8.8 | 9.72 | 9.71 | 9.70 | 9.8 | 10.88 | 10.87 | 10.86 | 10.9 |
| | | Amps | 25.34 | 25.31 | 25.25 | 25.5 | 28.70 | 28.67 | 28.61 | 28.9 | 32.44 | 32.42 | 32.36 | 32.6 | 36.50 | 36.48 | 36.42 | 36.7 | 41.04 | 41.01 | 40.95 | 41.2 | 46.36 | 46.33 | 46.27 | 46.5 |
| | | Hi PR | 270 | 271 | 273 | 277.7 | 312 | 313 | 315 | 319.3 | 355 | 356 | 358 | 362.9 | 402 | 403 | 405 | 409.8 | 453 | 454 | 456 | 460.4 | 507 | 508 | 510 | 514.5 |
| | | Lo PR | 137 | 139 | 142 | 147.8 | 145 | 147 | 150 | 155.8 | 152 | 154 | 157 | 162.7 | 158 | 160 | 163 | 168.6 | 164 | 165 | 169 | 174.4 | 171 | 173 | 176 | 181.6 |

**IDB: Entering Indoor Dry Bulb Temperature** Shaded area reflects ACCA (TVA) conditions **kW = Total system power**

**High and low pressures are measured at the liquid and suction access fittings.** **Amps: Unit amps (comp.+ evaporator + condenser fan motors)**

**Design Subcooling, 16 - 19 °F @ the liquid access fitting connection ARI 95 test conditions. Design Superheat 8 - 12°F @ the compressor suction access fitting connection.**

| | | | Outdoor Ambient Temperature | | | | | | | | | | | | | | | | | | | | | | | |
|---|---|---|---|---|---|---|---|---|---|---|---|---|---|---|---|---|---|---|---|---|---|---|---|---|---|---|
| | | | 65 | | | | 75 | | | | 85 | | | | 95 | | | | 105 | | | | 115 | | | |
| | | | Entering Indoor Wet Bulb Temperature | | | | | | | | | | | | | | | | | | | | | | | |
| IDB | Airflow | ID WB | 59 | 63 | 67 | 71 | 59 | 63 | 67 | 71 | 59 | 63 | 67 | 71 | 59 | 63 | 67 | 71 | 59 | 63 | 67 | 71 | 59 | 63 | 67 | 71 |
| 70 | 3325 | MBh | 117.9 | 119.6 | 123.1 | - | 116.8 | 118.5 | 122.0 | - | 113.8 | 115.4 | 118.9 | - | 108.4 | 110.1 | 113.6 | - | 102.0 | 103.6 | 107.2 | - | 96.1 | 97.7 | 101.2 | - |
| | | S/T | 0.60 | 0.53 | 0.39 | - | 0.61 | 0.53 | 0.40 | - | 1.00 | 0.56 | 0.42 | - | 1.00 | 0.58 | 0.44 | - | 1.00 | 0.60 | 0.46 | - | 1.00 | 1.00 | 0.52 | - |
| | | ΔT | 19.83 | 18.01 | 14.60 | - | 19.78 | 17.96 | 14.55 | - | 20.04 | 18.21 | 14.81 | - | 19.76 | 17.94 | 14.53 | - | 19.52 | 17.69 | 14.29 | - | 20.66 | 18.84 | 15.43 | - |
| | | kW | 7.30 | 7.29 | 7.28 | - | 8.18 | 8.17 | 8.16 | - | 9.16 | 9.16 | 9.14 | - | 10.23 | 10.22 | 10.21 | - | 11.42 | 11.41 | 11.39 | - | 12.81 | 12.80 | 12.79 | - |
| | | Amps | 28.31 | 28.28 | 28.21 | - | 32.34 | 32.31 | 32.24 | - | 36.84 | 36.81 | 36.74 | - | 41.71 | 41.67 | 41.60 | - | 47.14 | 47.11 | 47.04 | - | 53.52 | 53.49 | 53.42 | - |
| | | Hi PR | 271 | 273 | 275 | - | 314 | 315 | 317 | - | 359 | 360 | 362 | - | 408 | 409 | 411 | - | 460 | 461 | 463 | - | 515 | 516 | 518 | - |
| | | Lo PR | 131 | 132 | 136 | - | 139 | 140 | 144 | - | 146 | 147 | 151 | - | 152 | 153 | 157 | - | 157 | 159 | 162 | - | 165 | 166 | 170 | - |
| | 3850 | MBh | 119.6 | 121.2 | 124.8 | - | 118.5 | 120.2 | 123.7 | - | 115.4 | 117.1 | 120.6 | - | 110.1 | 111.8 | 115.3 | - | 103.6 | 105.3 | 108.8 | - | 97.7 | 99.4 | 102.9 | - |
| | | S/T | 0.67 | 0.59 | 0.46 | - | 0.68 | 0.60 | 0.46 | - | 1.00 | 0.63 | 0.49 | - | 1.00 | 0.65 | 0.51 | - | 1.00 | 0.67 | 0.53 | - | 1.00 | 1.00 | 0.58 | - |
| | | ΔT | 18.62 | 16.79 | 13.39 | - | 18.57 | 16.74 | 13.34 | - | 18.82 | 17.00 | 13.59 | - | 18.55 | 16.72 | 13.32 | - | 18.30 | 16.48 | 13.08 | - | 19.45 | 17.62 | 14.22 | - |
| | | kW | 7.35 | 7.34 | 7.33 | - | 8.23 | 8.22 | 8.21 | - | 9.21 | 9.21 | 9.19 | - | 10.28 | 10.27 | 10.26 | - | 11.47 | 11.46 | 11.44 | - | 12.86 | 12.85 | 12.84 | - |
| | | Amps | 28.54 | 28.51 | 28.44 | - | 32.57 | 32.54 | 32.47 | - | 37.07 | 37.04 | 36.97 | - | 41.94 | 41.90 | 41.84 | - | 47.37 | 47.34 | 47.27 | - | 53.75 | 53.72 | 53.65 | - |
| | | Hi PR | 274 | 275 | 277 | - | 317 | 318 | 320 | - | 362 | 363 | 365 | - | 410 | 411 | 413 | - | 462 | 463 | 465 | - | 518 | 519 | 521 | - |
| | | Lo PR | 133 | 134 | 138 | - | 141 | 142 | 146 | - | 148 | 149 | 153 | - | 154 | 155 | 159 | - | 159 | 161 | 164 | - | 167 | 168 | 172 | - |
| | 4275 | MBh | 121.2 | 122.9 | 126.4 | - | 120.1 | 121.8 | 125.3 | - | 117.1 | 118.7 | 122.2 | - | 111.8 | 113.4 | 116.9 | - | 105.3 | 106.9 | 110.5 | - | 99.4 | 101.0 | 104.5 | - |
| | | S/T | 0.70 | 0.63 | 0.49 | - | 0.71 | 0.63 | 0.50 | - | 1.00 | 0.66 | 0.52 | - | 1.00 | 0.68 | 0.54 | - | 1.00 | 0.70 | 0.56 | - | 1.00 | 1.00 | 0.61 | - |
| | | ΔT | 17.79 | 15.97 | 12.56 | - | 17.74 | 15.92 | 12.51 | - | 18.00 | 16.17 | 12.77 | - | 17.72 | 15.90 | 12.49 | - | 17.48 | 15.66 | 12.25 | - | 18.62 | 16.80 | 13.39 | - |
| | | kW | 7.39 | 7.38 | 7.36 | - | 8.27 | 8.26 | 8.24 | - | 9.25 | 9.24 | 9.23 | - | 10.31 | 10.31 | 10.29 | - | 11.50 | 11.49 | 11.48 | - | 12.89 | 12.89 | 12.87 | - |
| | | Amps | 28.70 | 28.67 | 28.60 | - | 32.73 | 32.69 | 32.63 | - | 37.22 | 37.19 | 37.12 | - | 42.09 | 42.06 | 41.99 | - | 47.53 | 47.50 | 47.43 | - | 53.91 | 53.88 | 53.81 | - |
| | | Hi PR | 276 | 277 | 279 | - | 319 | 320 | 322 | - | 364 | 365 | 367 | - | 412 | 413 | 415 | - | 464 | 465 | 467 | - | 520 | 521 | 523 | - |
| | | Lo PR | 135 | 136 | 140 | - | 143 | 144 | 148 | - | 150 | 151 | 155 | - | 156 | 157 | 161 | - | 161 | 163 | 166 | - | 169 | 170 | 174 | - |
| 75 | 3325 | MBh | 118.0 | 119.6 | 123.2 | 128.5 | 116.9 | 118.6 | 122.1 | 127.5 | 113.8 | 115.5 | 119.0 | 124.4 | 108.5 | 110.2 | 113.7 | 119.1 | 102.0 | 103.7 | 107.2 | 112.6 | 96.1 | 97.8 | 101.3 | 106.7 |
| | | S/T | 0.73 | 0.66 | 0.52 | 0.4 | 1.00 | 0.66 | 0.53 | 0.4 | 1.00 | 0.69 | 0.55 | 0.4 | 1.00 | 0.71 | 0.57 | 0.4 | 1.00 | 1.00 | 0.59 | 0.4 | 1.00 | 1.00 | 0.65 | 0.5 |
| | | ΔT | 23.84 | 22.02 | 18.61 | 15.1 | 23.79 | 21.97 | 18.56 | 15.0 | 24.05 | 22.22 | 18.82 | 15.3 | 23.77 | 21.95 | 18.54 | 15.0 | 23.53 | 21.70 | 18.30 | 14.8 | 24.67 | 22.85 | 19.44 | 15.9 |
| | | kW | 7.30 | 7.29 | 7.27 | 7.3 | 8.18 | 8.17 | 8.15 | 8.2 | 9.16 | 9.15 | 9.14 | 9.2 | 10.22 | 10.21 | 10.20 | 10.3 | 11.41 | 11.40 | 11.39 | 11.5 | 12.80 | 12.80 | 12.78 | 12.8 |
| | | Amps | 28.28 | 28.25 | 28.18 | 28.5 | 32.31 | 32.28 | 32.21 | 32.5 | 36.81 | 36.78 | 36.71 | 37.0 | 41.68 | 41.65 | 41.58 | 41.9 | 47.12 | 47.09 | 47.02 | 47.3 | 53.50 | 53.47 | 53.40 | 53.7 |
| | | Hi PR | 272 | 273 | 275 | 279.5 | 315 | 316 | 318 | 322.3 | 359 | 361 | 363 | 367.3 | 408 | 409 | 411 | 415.6 | 460 | 461 | 463 | 467.7 | 516 | 517 | 519 | 523.4 |
| | | Lo PR | 131 | 132 | 136 | 141.3 | 139 | 140 | 144 | 149.3 | 146 | 147 | 151 | 156.3 | 152 | 153 | 157 | 162.2 | 157 | 159 | 162 | 168.0 | 165 | 166 | 170 | 175.2 |
| | 3850 | MBh | 119.6 | 121.3 | 124.8 | 130.2 | 118.6 | 120.2 | 123.8 | 129.2 | 115.5 | 117.2 | 120.7 | 126.1 | 110.2 | 111.9 | 115.4 | 120.8 | 103.7 | 105.4 | 108.9 | 114.3 | 97.8 | 99.5 | 103.0 | 108.4 |
| | | S/T | 0.80 | 0.72 | 0.59 | 0.4 | 1.00 | 0.73 | 0.59 | 0.5 | 1.00 | 0.76 | 0.62 | 0.5 | 1.00 | 1.00 | 0.64 | 0.5 | 1.00 | 1.00 | 0.66 | 0.5 | 1.00 | 1.00 | 0.71 | 0.6 |
| | | ΔT | 22.63 | 20.80 | 17.40 | 13.9 | 22.58 | 20.75 | 17.35 | 13.8 | 22.83 | 21.01 | 17.60 | 14.1 | 22.56 | 20.73 | 17.33 | 13.8 | 22.31 | 20.49 | 17.09 | 13.6 | 23.46 | 21.63 | 18.23 | 14.7 |
| | | kW | 7.35 | 7.34 | 7.32 | 7.4 | 8.23 | 8.22 | 8.20 | 8.3 | 9.21 | 9.20 | 9.19 | 9.3 | 10.27 | 10.27 | 10.25 | 10.3 | 11.46 | 11.45 | 11.44 | 11.5 | 12.85 | 12.85 | 12.83 | 12.9 |
| | | Amps | 28.52 | 28.48 | 28.41 | 28.7 | 32.54 | 32.51 | 32.44 | 32.8 | 37.04 | 37.01 | 36.94 | 37.2 | 41.91 | 41.88 | 41.81 | 42.1 | 47.35 | 47.32 | 47.25 | 47.6 | 53.73 | 53.70 | 53.63 | 53.9 |
| | | Hi PR | 274 | 275 | 277 | 282.0 | 317 | 318 | 320 | 324.9 | 362 | 363 | 365 | 369.8 | 410 | 411 | 413 | 418.1 | 462 | 464 | 466 | 470.3 | 518 | 519 | 521 | 525.9 |
| | | Lo PR | 133 | 135 | 138 | 143.4 | 141 | 142 | 146 | 151.4 | 148 | 149 | 153 | 158.4 | 154 | 155 | 159 | 164.3 | 160 | 161 | 164 | 170.1 | 167 | 168 | 172 | 177.3 |
| | 4275 | MBh | 121.3 | 122.9 | 126.5 | 131.8 | 120.2 | 121.9 | 125.4 | 130.8 | 117.1 | 118.8 | 122.3 | 127.7 | 111.8 | 113.5 | 117.0 | 122.4 | 105.3 | 107.0 | 110.5 | 115.9 | 99.4 | 101.1 | 104.6 | 110.0 |
| | | S/T | 1.00 | 0.76 | 0.62 | 0.5 | 1.00 | 0.76 | 0.63 | 0.5 | 1.00 | 0.79 | 0.65 | 0.5 | 1.00 | 1.00 | 0.67 | 0.5 | 1.00 | 1.00 | 0.69 | 0.5 | 1.00 | 1.00 | 0.74 | 0.6 |
| | | ΔT | 21.80 | 19.98 | 16.57 | 13.0 | 21.75 | 19.93 | 16.52 | 13.0 | 22.01 | 20.18 | 16.78 | 13.3 | 21.73 | 19.91 | 16.50 | 13.0 | 21.49 | 19.66 | 16.26 | 12.7 | 22.63 | 20.81 | 17.40 | 13.9 |
| | | kW | 7.38 | 7.37 | 7.36 | 7.4 | 8.26 | 8.25 | 8.24 | 8.3 | 9.24 | 9.24 | 9.22 | 9.3 | 10.31 | 10.30 | 10.28 | 10.4 | 11.49 | 11.49 | 11.47 | 11.5 | 12.89 | 12.88 | 12.87 | 12.9 |
| | | Amps | 28.67 | 28.64 | 28.57 | 28.9 | 32.70 | 32.67 | 32.60 | 32.9 | 37.20 | 37.17 | 37.10 | 37.4 | 42.07 | 42.03 | 41.96 | 42.3 | 47.50 | 47.47 | 47.40 | 47.7 | 53.88 | 53.85 | 53.78 | 54.1 |
| | | Hi PR | 276 | 277 | 279 | 284.0 | 319 | 320 | 322 | 326.9 | 364 | 365 | 367 | 371.8 | 412 | 413 | 415 | 420.1 | 464 | 466 | 468 | 472.2 | 520 | 521 | 523 | 527.9 |
| | | Lo PR | 135 | 136 | 140 | 145.3 | 143 | 144 | 148 | 153.3 | 150 | 151 | 155 | 160.2 | 156 | 157 | 161 | 166.1 | 161 | 163 | 166 | 171.9 | 169 | 170 | 174 | 179.2 |

**IDB: Entering Indoor Dry Bulb Temperature** Shaded area reflects ACCA (TVA) conditions **kW = Total system power**

**High and low pressures are measured at the liquid and suction access fittings.** **Amps: Unit amps (comp.+ evaporator + condenser fan motors)**

**Design Subcooling, 16 - 19 °F @ the liquid access fitting connection ARI 95 test conditions. Design Superheat 8 - 12°F @ the compressor suction access fitting connection.**

| | | | Outdoor Ambient Temperature | | | | | | | | | | | | | | | | | | | | | | | |
|---|---|---|---|---|---|---|---|---|---|---|---|---|---|---|---|---|---|---|---|---|---|---|---|---|---|---|
| | | | 65 | | | | 75 | | | | 85 | | | | 95 | | | | 105 | | | | 115 | | | |
| | | | Entering Indoor Wet Bulb Temperature | | | | | | | | | | | | | | | | | | | | | | | |
| IDB | Airflow | ID WB | 59 | 63 | 67 | 71 | 59 | 63 | 67 | 71 | 59 | 63 | 67 | 71 | 59 | 63 | 67 | 71 | 59 | 63 | 67 | 71 | 59 | 63 | 67 | 71 |
| 80 | 3325 | MBh | 118.6 | 120.2 | 123.8 | 129.1 | 117.5 | 119.2 | 122.7 | 128.1 | 114.4 | 116.1 | 119.6 | 125.0 | 109.1 | 110.8 | 240.0 | 119.7 | 102.6 | 104.3 | 107.8 | 113.2 | 96.7 | 98.4 | 101.9 | 107.3 |
| | | S/T | 1.00 | 0.78 | 0.65 | 0.5 | 1.00 | 0.79 | 0.65 | 0.5 | 1.00 | 1.00 | 0.68 | 0.5 | 1.00 | 1.00 | 0.70 | 0.6 | 1.00 | 1.00 | 0.72 | 0.6 | 1.00 | 1.00 | 1.00 | 0.6 |
| | | ΔT | 27.88 | 26.05 | 22.65 | 19.1 | 27.83 | 26.00 | 22.60 | 19.1 | 28.08 | 26.26 | 22.85 | 19.3 | 27.81 | 25.98 | 22.58 | 19.1 | 27.56 | 25.74 | 22.34 | 18.8 | 28.71 | 26.88 | 23.48 | 19.9 |
| | | kW | 7.30 | 7.29 | 7.28 | 7.3 | 8.18 | 8.17 | 8.16 | 8.2 | 9.16 | 9.16 | 9.14 | 9.2 | 10.23 | 10.22 | 10.20 | 10.3 | 11.41 | 11.41 | 11.39 | 11.5 | 12.81 | 12.80 | 12.79 | 12.9 |
| | | Amps | 28.31 | 28.27 | 28.21 | 28.5 | 32.34 | 32.30 | 32.23 | 32.5 | 36.83 | 36.80 | 36.73 | 37.0 | 41.70 | 41.67 | 41.60 | 41.9 | 47.14 | 47.11 | 47.04 | 47.3 | 53.52 | 53.49 | 53.42 | 53.7 |
| | | Hi PR | 272 | 273 | 275 | 280.0 | 315 | 316 | 318 | 322.8 | 360 | 361 | 363 | 367.8 | 408 | 409 | 411 | 416.1 | 460 | 462 | 464 | 468.2 | 516 | 517 | 519 | 523.9 |
| | | Lo PR | 131 | 133 | 136 | 141.9 | 139 | 141 | 144 | 149.9 | 146 | 148 | 151 | 156.8 | 152 | 154 | 157 | 162.7 | 158 | 160 | 163 | 168.5 | 165 | 167 | 170 | 175.8 |
| | 3850 | MBh | 120.2 | 121.9 | 125.4 | 130.8 | 119.2 | 120.9 | 124.4 | 129.8 | 116.1 | 117.8 | 121.3 | 126.7 | 110.8 | 112.5 | **116.0** | 121.4 | 104.3 | 106.0 | 109.5 | 114.9 | 98.4 | 100.1 | 103.6 | 109.0 |
| | | S/T | 1.00 | 0.85 | 0.71 | 0.6 | 1.00 | 0.86 | 0.72 | 0.6 | 1.00 | 1.00 | 0.75 | 0.6 | 1.00 | 1.00 | **0.77** | 0.6 | 1.00 | 1.00 | 0.79 | 0.6 | 1.00 | 1.00 | 1.00 | 0.7 |
| | | ΔT | 26.66 | 24.84 | 21.43 | 17.9 | 26.61 | 24.79 | 21.38 | 17.9 | 26.87 | 25.05 | 21.64 | 18.1 | 26.59 | 24.77 | **21.37** | 17.8 | 26.35 | 24.53 | 21.12 | 17.6 | 27.49 | 25.67 | 22.26 | 18.7 |
| | | kW | 7.35 | 7.34 | 7.33 | 7.4 | 8.23 | 8.22 | 8.21 | 8.3 | 9.21 | 9.21 | 9.19 | 9.3 | 10.28 | 10.27 | **10.25** | 10.3 | 11.47 | 11.46 | 11.44 | 11.5 | 12.86 | 12.85 | 12.84 | 12.9 |
| | | Amps | 28.54 | 28.50 | 28.44 | 28.7 | 32.57 | 32.53 | 32.46 | 32.8 | 37.06 | 37.03 | 36.96 | 37.3 | 41.93 | 41.90 | **41.83** | 42.1 | 47.37 | 47.34 | 47.27 | 47.6 | 53.75 | 53.72 | 53.65 | 54.0 |
| | | Hi PR | 275 | 276 | 278 | 282.5 | 318 | 319 | 321 | 325.4 | 362 | 364 | 366 | 370.3 | 411 | 412 | **414** | 418.6 | 463 | 464 | 466 | 470.8 | 519 | 520 | 522 | 526.4 |
| | | Lo PR | 133 | 135 | 138 | 144.0 | 141 | 143 | 146 | 152.0 | 148 | 150 | 153 | 158.9 | 154 | 156 | **159** | 164.8 | 160 | 162 | 165 | 170.6 | 167 | 169 | 172 | 177.9 |
| | 4275 | MBh | 121.9 | 123.5 | 127.1 | 132.5 | 120.8 | 122.5 | 126.0 | 131.4 | 117.7 | 119.4 | 122.9 | 128.3 | 112.4 | 114.1 | 117.6 | 123.0 | 106.0 | 107.6 | 111.1 | 116.5 | 100.0 | 101.7 | 105.2 | 110.6 |
| | | S/T | 1.00 | 0.88 | 0.75 | 0.6 | 1.00 | 0.89 | 0.75 | 0.6 | 1.00 | 1.00 | 0.78 | 0.6 | 1.00 | 1.00 | 0.80 | 0.7 | 1.00 | 1.00 | 0.82 | 0.7 | 1.00 | 1.00 | 1.00 | 0.7 |
| | | ΔT | 25.84 | 24.01 | 20.61 | 17.1 | 25.79 | 23.96 | 20.56 | 17.0 | 26.04 | 24.22 | 20.81 | 17.3 | 25.77 | 23.94 | 20.54 | 17.0 | 25.52 | 23.70 | 20.30 | 16.8 | 26.67 | 24.84 | 21.44 | 17.9 |
| | | kW | 7.38 | 7.38 | 7.36 | 7.4 | 8.26 | 8.26 | 8.24 | 8.3 | 9.25 | 9.24 | 9.23 | 9.3 | 10.31 | 10.30 | 10.29 | 10.4 | 11.50 | 11.49 | 11.48 | 11.5 | 12.89 | 12.89 | 12.87 | 12.9 |
| | | Amps | 28.69 | 28.66 | 28.59 | 28.9 | 32.72 | 32.69 | 32.62 | 32.9 | 37.22 | 37.19 | 37.12 | 37.4 | 42.09 | 42.06 | 41.99 | 42.3 | 47.52 | 47.49 | 47.42 | 47.7 | 53.91 | 53.87 | 53.80 | 54.1 |
| | | Hi PR | 277 | 278 | 280 | 284.5 | 320 | 321 | 323 | 327.4 | 364 | 366 | 368 | 372.3 | 413 | 414 | 416 | 420.6 | 465 | 466 | 468 | 472.7 | 521 | 522 | 524 | 528.4 |
| | | Lo PR | 135 | 137 | 140 | 145.9 | 143 | 145 | 148 | 153.8 | 150 | 152 | 155 | 160.8 | 156 | 158 | 161 | 166.7 | 162 | 164 | 167 | 172.5 | 169 | 171 | 174 | 179.7 |
| 85 | 3325 | MBh | 120.6 | 122.2 | 125.7 | 131.1 | 119.5 | 121.2 | 124.7 | 130.1 | 116.4 | 118.1 | 121.6 | 127.0 | 111.1 | 112.8 | 116.3 | 121.7 | 104.6 | 106.3 | 109.8 | 115.2 | 98.7 | 100.4 | 103.9 | 109.3 |
| | | S/T | 1.00 | 0.89 | 0.75 | 0.6 | 1.00 | 1.00 | 0.76 | 0.6 | 1.00 | 1.00 | 0.78 | 0.6 | 1.00 | 1.00 | 1.00 | 0.7 | 1.00 | 1.00 | 1.00 | 0.7 | 1.00 | 1.00 | 1.00 | 0.7 |
| | | ΔT | 31.46 | 29.63 | 26.23 | 22.7 | 31.41 | 29.58 | 26.18 | 22.7 | 31.66 | 29.84 | 26.43 | 22.9 | 31.39 | 29.56 | 26.16 | 22.6 | 31.14 | 29.32 | 25.92 | 22.4 | 32.29 | 30.46 | 27.06 | 23.5 |
| | | kW | 7.32 | 7.31 | 7.29 | 7.4 | 8.20 | 8.19 | 8.18 | 8.2 | 9.18 | 9.17 | 9.16 | 9.2 | 10.24 | 10.24 | 10.22 | 10.3 | 11.43 | 11.42 | 11.41 | 11.5 | 12.83 | 12.82 | 12.80 | 12.9 |
| | | Amps | 28.38 | 28.35 | 28.28 | 28.6 | 32.41 | 32.38 | 32.31 | 32.6 | 36.91 | 36.88 | 36.81 | 37.1 | 41.78 | 41.75 | 41.68 | 42.0 | 47.22 | 47.18 | 47.12 | 47.4 | 53.60 | 53.56 | 53.50 | 53.8 |
| | | Hi PR | 273 | 275 | 277 | 281.3 | 316 | 317 | 319 | 324.1 | 361 | 362 | 364 | 369.0 | 410 | 411 | 413 | 417.4 | 462 | 463 | 465 | 469.5 | 517 | 519 | 520 | 525.2 |
| | | Lo PR | 133 | 135 | 138 | 143.9 | 141 | 143 | 146 | 151.8 | 148 | 150 | 153 | 158.8 | 154 | 156 | 159 | 164.7 | 160 | 162 | 165 | 170.5 | 167 | 169 | 172 | 177.7 |
| | 3850 | MBh | 122.2 | 123.9 | 127.4 | 132.8 | 121.2 | 122.8 | 126.4 | 131.8 | 118.1 | 119.8 | 123.3 | 128.7 | 112.8 | 114.5 | 118.0 | 123.4 | 106.3 | 108.0 | 111.5 | 116.9 | 100.4 | 102.1 | 105.6 | 111.0 |
| | | S/T | 1.00 | 1.00 | 0.82 | 0.7 | 1.00 | 1.00 | 0.82 | 0.7 | 1.00 | 1.00 | 0.85 | 0.7 | 1.00 | 1.00 | 1.00 | 0.7 | 1.00 | 1.00 | 1.00 | 0.7 | 1.00 | 1.00 | 1.00 | 0.8 |
| | | ΔT | 30.24 | 28.42 | 25.01 | 21.5 | 30.19 | 28.37 | 24.96 | 21.4 | 30.45 | 28.63 | 25.22 | 21.7 | 30.17 | 28.35 | 24.95 | 21.4 | 29.93 | 28.11 | 24.70 | 21.2 | 31.07 | 29.25 | 25.84 | 22.3 |
| | | kW | 7.37 | 7.36 | 7.35 | 7.4 | 8.25 | 8.24 | 8.23 | 8.3 | 9.23 | 9.22 | 9.21 | 9.3 | 10.29 | 10.29 | 10.27 | 10.3 | 11.48 | 11.48 | 11.46 | 11.5 | 12.88 | 12.87 | 12.85 | 12.9 |
| | | Amps | 28.61 | 28.58 | 28.51 | 28.8 | 32.64 | 32.61 | 32.54 | 32.9 | 37.14 | 37.11 | 37.04 | 37.3 | 42.01 | 41.98 | 41.91 | 42.2 | 47.45 | 47.41 | 47.35 | 47.7 | 53.83 | 53.79 | 53.73 | 54.0 |
| | | Hi PR | 276 | 277 | 279 | 283.8 | 319 | 320 | 322 | 326.7 | 364 | 365 | 367 | 371.6 | 412 | 413 | 415 | 419.9 | 464 | 465 | 467 | 472.0 | 520 | 521 | 523 | 527.7 |
| | | Lo PR | 135 | 137 | 140 | 146.0 | 143 | 145 | 148 | 153.9 | 150 | 152 | 155 | 160.9 | 156 | 158 | 161 | 166.8 | 162 | 164 | 167 | 172.6 | 169 | 171 | 174 | 179.8 |
| | 4275 | MBh | 123.9 | 125.5 | 129.1 | 134.4 | 122.8 | 124.5 | 128.0 | 133.4 | 119.7 | 121.4 | 124.9 | 130.3 | 114.4 | 116.1 | 119.6 | 125.0 | 107.9 | 109.6 | 113.1 | 118.5 | 102.0 | 103.7 | 107.2 | 112.6 |
| | | S/T | 1.00 | 1.00 | 0.85 | 0.7 | 1.00 | 1.00 | 0.85 | 0.7 | 1.00 | 1.00 | 0.88 | 0.7 | 1.00 | 1.00 | 1.00 | 0.8 | 1.00 | 1.00 | 1.00 | 0.8 | 1.00 | 1.00 | 1.00 | 1.0 |
| | | ΔT | 29.42 | 27.59 | 24.19 | 20.7 | 29.37 | 27.54 | 24.14 | 20.6 | 29.62 | 27.80 | 24.40 | 20.9 | 29.35 | 27.52 | 24.12 | 20.6 | 29.10 | 27.28 | 23.88 | 20.3 | 30.25 | 28.42 | 25.02 | 21.5 |
| | | kW | 7.40 | 7.39 | 7.38 | 7.4 | 8.28 | 8.27 | 8.26 | 8.3 | 9.26 | 9.26 | 9.24 | 9.3 | 10.33 | 10.32 | 10.31 | 10.4 | 11.52 | 11.51 | 11.49 | 11.6 | 12.91 | 12.90 | 12.89 | 13.0 |
| | | Amps | 28.77 | 28.74 | 28.67 | 29.0 | 32.80 | 32.77 | 32.70 | 33.0 | 37.30 | 37.26 | 37.20 | 37.5 | 42.16 | 42.13 | 42.06 | 42.4 | 47.60 | 47.57 | 47.50 | 47.8 | 53.98 | 53.95 | 53.88 | 54.2 |
| | | Hi PR | 278 | 279 | 281 | 285.8 | 321 | 322 | 324 | 328.6 | 366 | 367 | 369 | 373.5 | 414 | 415 | 417 | 421.9 | 466 | 467 | 469 | 474.0 | 522 | 523 | 525 | 529.7 |
| | | Lo PR | 137 | 139 | 142 | 147.8 | 145 | 147 | 150 | 155.8 | 152 | 154 | 157 | 162.8 | 158 | 160 | 163 | 168.7 | 164 | 166 | 169 | 174.5 | 171 | 173 | 176 | 181.7 |

**IDB: Entering Indoor Dry Bulb Temperature** Shaded area reflects ACCA (TVA) conditions **kW = Total system power**

**High and low pressures are measured at the liquid and suction access fittings.** **Amps: Unit amps (comp.+ evaporator + condenser fan motors)**

**Design Subcooling, 16 - 19 °F @ the liquid access fitting connection ARI 95 test conditions. Design Superheat 8 - 12°F @ the compressor suction access fitting connection.**

# Electrical Heater Data

| Model # | Min Airflow | EHXD-3M15 | EHXD-3M30 | EHXD-3M45 | EHXD-4M15 | EHXD-4M30 | EHXD-4M45 | EHXD-7M15 | EHXD-7M30 | EHXD-7M45 |
|---|---|---|---|---|---|---|---|---|---|---|
| DSH0903 | 2400 | X | X | X | | | | | | |
| DSH0904 | | | | | X | X | X | | | |
| DSH0907 | | | | | | | | X | X | X |
| DSH1023 | 2750 | X | X | X | | | | | | |
| DSH1024 | | | | | X | X | X | | | |
| DSH1027 | | | | | | | | X | X | X |
| DSH1023 | 3200 | X | X | X | | | | | | |
| DSH1204 | | | | | X | X | X | | | |
| DSH1207 | | | | | | | | X | X | X |
| DSH1503 | 3750 | X | X | X | | | | | | |
| DSH1504 | | | | | X | X | X | | | |
| DSH1507 | | | | | | | | X | X | X |

**7.5 Ton HP Data • Models: DSH0903D, DSH0904D, DSH0907D**

| Down Flow | | | | |
|---|---|---|---|---|
| Speed Tap | ESP | CFM | RPM | BHP |
| T1** | 0.2 | 1974 | 438 | 0.23 |
| | 0.4 | 1789 | 523 | 0.27 |
| | 0.6 | - | - | - |
| | 0.8 | - | - | - |
| T2** | 0.2 | 2131 | 458 | 0.28 |
| | 0.4 | 1969 | 531 | 0.32 |
| | 0.6 | 1782 | 616 | 0.38 |
| | 0.8 | - | - | - |
| T3 | 0.2 | 3072 | 567 | 0.69 |
| | 0.4 | 2947 | 628 | 0.76 |
| | 0.6 | 2837 | 684 | 0.83 |
| | 0.8 | 2695 | 737 | 0.89 |
| T4 | 0.2 | 3307 | 840 | 1.17 |
| | 0.4 | 3216 | 897 | 1.25 |
| | 0.6 | 3119 | 951 | 1.33 |
| | 0.8 | 3014 | 1005 | 1.40 |
| T5 | 0.2 | 3370 | 796 | 1.17 |
| | 0.4 | 3289 | 852 | 1.25 |
| | 0.6 | 3201 | 905 | 1.33 |
| | 0.8 | 3070 | 958 | 1.40 |
| T6 | 0.2 | 2411 | 488 | 0.37 |
| | 0.4 | - | - | - |
| | 0.6 | - | - | - |
| | 0.8 | - | - | - |
| T7 | 0.2 | 2666 | 518 | 0.48 |
| | 0.4 | 2531 | 583 | 0.54 |
| | 0.6 | 2393 | 647 | 0.59 |
| | 0.8 | 2231 | 712 | 0.65 |
| T8 | 0.2 | 2798 | 533 | 0.53 |
| | 0.4 | 2658 | 596 | 0.60 |
| | 0.6 | 2530 | 654 | 0.66 |
| | 0.8 | 2377 | 717 | 0.72 |
| T9 | 0.2 | 3307 | 840 | 1.35 |
| | 0.4 | 3216 | 897 | 1.44 |
| | 0.6 | 3119 | 951 | 1.53 |
| | 0.8 | 3014 | 1005 | 1.61 |
| T10 | 0.2 | 3370 | 796 | 1.34 |
| | 0.4 | 3289 | 852 | 1.43 |
| | 0.6 | 3201 | 905 | 1.52 |
| | 0.8 | 3070 | 958 | 1.61 |

| Horizontal Flow | | | | |
|---|---|---|---|---|
| Speed Tap | ESP | CFM | RPM | BHP |
| T1** | 0.2 | 1928 | 449 | 0.24 |
| | 0.4 | 1774 | 535 | 0.28 |
| | 0.6 | - | - | - |
| | 0.8 | - | - | - |
| T2** | 0.2 | 2141 | 486 | 0.30 |
| | 0.4 | 1978 | 556 | 0.34 |
| | 0.6 | 1790 | 639 | 0.39 |
| | 0.8 | - | - | - |
| T3 | 0.2 | 3031 | 594 | 0.72 |
| | 0.4 | 2909 | 649 | 0.79 |
| | 0.6 | 2799 | 699 | 0.85 |
| | 0.8 | 2682 | 749 | 0.91 |
| T4 | 0.2 | 3251 | 849 | 1.18 |
| | 0.4 | 3141 | 906 | 1.26 |
| | 0.6 | 3035 | 961 | 1.34 |
| | 0.8 | 2930 | 1017 | 1.42 |
| T5 | 0.2 | 3335 | 807 | 1.18 |
| | 0.4 | 3229 | 861 | 1.26 |
| | 0.6 | 3125 | 914 | 1.34 |
| | 0.8 | 3022 | 968 | 1.42 |
| T6 | 0.2 | 2375 | 500 | 0.38 |
| | 0.4 | - | - | - |
| | 0.6 | - | - | - |
| | 0.8 | - | - | - |
| T7 | 0.2 | 2636 | 534 | 0.49 |
| | 0.4 | 2506 | 594 | 0.55 |
| | 0.6 | 2379 | 652 | 0.60 |
| | 0.8 | - | - | - |
| T8 | 0.2 | 2757 | 549 | 0.55 |
| | 0.4 | 2637 | 607 | 0.61 |
| | 0.6 | 2509 | 660 | 0.66 |
| | 0.8 | 2377 | 723 | 0.73 |
| T9 | 0.2 | 3251 | 849 | 1.18 |
| | 0.4 | 3141 | 906 | 1.26 |
| | 0.6 | 3035 | 961 | 1.34 |
| | 0.8 | 2930 | 1017 | 1.42 |
| T10 | 0.2 | 3335 | 807 | 1.18 |
| | 0.4 | 3229 | 861 | 1.26 |
| | 0.6 | 3125 | 914 | 1.34 |
| | 0.8 | 3022 | 968 | 1.42 |

Shaded speed tap - Airflow for supplimental heat
.** (T1) and (T2) are part load only

**7.5 Ton Fan Data • Models: DSH0903L, DSH0904L, DSH0907L**

| Down Flow | | | | |
|---|---|---|---|---|
| Speed Tap | ESP | CFM | RPM | BHP |
| T1** | 0.2 | 2298 | 473 | 0.33 |
| | 0.4 | 2147 | 549 | 0.39 |
| | 0.6 | 1967 | 619 | 0.44 |
| | 0.8 | 1637 | 732 | 0.52 |
| | 1 | - | - | - |
| | 1.2 | - | - | - |
| | 1.4 | - | - | - |
| T2** | 0.2 | 2345 | 476 | 0.34 |
| | 0.4 | 2187 | 549 | 0.39 |
| | 0.6 | 2019 | 621 | 0.45 |
| | 0.8 | 1686 | 731 | 0.53 |
| | 1 | 1496 | 790 | 0.57 |
| | 1.2 | - | - | - |
| | 1.4 | - | - | - |
| T3 | 0.2 | 3538 | 619 | 0.97 |
| | 0.4 | 3413 | 672 | 1.06 |
| | 0.6 | 3301 | 723 | 1.14 |
| | 0.8 | 3201 | 770 | 1.21 |
| | 1 | 3070 | 819 | 1.29 |
| | 1.2 | 2960 | 870 | 1.37 |
| | 1.4 | 2839 | 922 | 1.45 |
| T4 | 0.2 | 3884 | 710 | 1.16 |
| | 0.4 | 3721 | 765 | 1.25 |
| | 0.6 | 3582 | 816 | 1.33 |
| | 0.8 | 3460 | 865 | 1.41 |
| | 1 | 3334 | 918 | 1.50 |
| | 1.2 | 3070 | 984 | 1.60 |
| | 1.4 | 3053 | 1053 | 1.72 |
| T5 | 0.2 | 3711 | 638 | 1.11 |
| | 0.4 | 3592 | 691 | 1.20 |
| | 0.6 | 3489 | 740 | 1.28 |
| | 0.8 | 3391 | 786 | 1.36 |
| | 1 | 3295 | 835 | 1.45 |
| | 1.2 | 3178 | 882 | 1.53 |
| | 1.4 | 2990 | 929 | 1.61 |
| T6 | 0.2 | 3027 | 554 | 0.64 |
| | 0.4 | 2895 | 614 | 0.71 |
| | 0.6 | 2786 | 670 | 0.77 |
| | 0.8 | 2657 | 725 | 0.84 |
| | 1 | 2500 | 784 | 0.91 |
| | 1.2 | - | - | - |
| | 1.4 | - | - | - |
| T7 | 0.2 | 3307 | 587 | 0.81 |
| | 0.4 | 3170 | 644 | 0.88 |
| | 0.6 | 3063 | 698 | 0.96 |
| | 0.8 | 2946 | 747 | 1.03 |
| | 1 | 2816 | 801 | 1.10 |
| | 1.2 | 2678 | 856 | 1.18 |
| | 1.4 | 2403 | 941 | 1.29 |
| T8 | 0.2 | 3538 | 619 | 0.97 |
| | 0.4 | 3413 | 672 | 1.06 |
| | 0.6 | 3301 | 723 | 1.14 |
| | 0.8 | 3201 | 770 | 1.21 |
| | 1 | 3070 | 819 | 1.29 |
| | 1.2 | 2960 | 870 | 1.37 |
| | 1.4 | 2839 | 922 | 1.45 |
| T9 | 0.2 | 3884 | 710 | 1.16 |
| | 0.4 | 3721 | 765 | 1.25 |
| | 0.6 | 3582 | 816 | 1.33 |
| | 0.8 | 3460 | 865 | 1.41 |
| | 1 | 3334 | 918 | 1.50 |
| | 1.2 | 3189 | 984 | 1.60 |
| | 1.4 | 3051 | 1053 | 1.72 |
| T10 | 0.2 | 3711 | 638 | 1.26 |
| | 0.4 | 3592 | 691 | 1.36 |
| | 0.6 | 3489 | 740 | 1.46 |
| | 0.8 | 3391 | 786 | 1.55 |
| | 1 | 3295 | 835 | 1.65 |
| | 1.2 | 3178 | 882 | 1.74 |
| | 1.4 | 3051 | 929 | 1.83 |

| Horizontal Flow | | | | |
|---|---|---|---|---|
| Speed Tap | ESP | CFM | RPM | BHP |
| T1** | 0.2 | 2284 | 494 | 0.35 |
| | 0.4 | 2135 | 562 | 0.40 |
| | 0.6 | 1976 | 632 | 0.45 |
| | 0.8 | 1626 | 743 | 0.52 |
| | 1 | - | - | - |
| | 1.2 | - | - | - |
| | 1.4 | - | - | - |
| T2** | 0.2 | 2304 | 497 | 0.36 |
| | 0.4 | 2152 | 562 | 0.40 |
| | 0.6 | 1998 | 634 | 0.46 |
| | 0.8 | 1646 | 746 | 0.54 |
| | 1 | - | - | - |
| | 1.2 | - | - | - |
| | 1.4 | - | - | - |
| T3 | 0.2 | 3466 | 652 | 1.03 |
| | 0.4 | 3361 | 701 | 1.10 |
| | 0.6 | 3261 | 744 | 1.17 |
| | 0.8 | 3176 | 790 | 1.24 |
| | 1 | 3058 | 837 | 1.32 |
| | 1.2 | 2952 | 885 | 1.39 |
| | 1.4 | 2816 | 943 | 1.48 |
| T4 | 0.2 | 3601 | 677 | 1.10 |
| | 0.4 | 3478 | 736 | 1.20 |
| | 0.6 | 3370 | 790 | 1.29 |
| | 0.8 | 3271 | 840 | 1.37 |
| | 1 | 3166 | 893 | 1.46 |
| | 1.2 | 3010 | 958 | 1.56 |
| | 1.4 | 2917 | 1024 | 1.67 |
| T5 | 0.2 | 3622 | 676 | 1.17 |
| | 0.4 | 3530 | 723 | 1.25 |
| | 0.6 | 3432 | 766 | 1.33 |
| | 0.8 | 3341 | 810 | 1.40 |
| | 1 | 3251 | 852 | 1.48 |
| | 1.2 | 3144 | 898 | 1.56 |
| | 1.4 | 3006 | 947 | 1.64 |
| T6 | 0.2 | 2983 | 582 | 0.67 |
| | 0.4 | 2864 | 635 | 0.73 |
| | 0.6 | 2749 | 687 | 0.79 |
| | 0.8 | 2630 | 740 | 0.85 |
| | 1 | 2492 | 801 | 0.93 |
| | 1.2 | - | - | - |
| | 1.4 | - | - | - |
| T7 | 0.2 | 3230 | 617 | 0.83 |
| | 0.4 | 3112 | 667 | 0.90 |
| | 0.6 | 3005 | 716 | 0.97 |
| | 0.8 | 2905 | 761 | 1.03 |
| | 1 | 2801 | 817 | 1.10 |
| | 1.2 | 2673 | 872 | 1.18 |
| | 1.4 | 2325 | 978 | 1.32 |
| T8 | 0.2 | 3466 | 652 | 1.03 |
| | 0.4 | 3361 | 701 | 1.10 |
| | 0.6 | 3261 | 744 | 1.17 |
| | 0.8 | 3176 | 790 | 1.24 |
| | 1 | 3058 | 837 | 1.32 |
| | 1.2 | 2952 | 885 | 1.39 |
| | 1.4 | 2816 | 943 | 1.48 |
| T9 | 0.2 | 3601 | 677 | 1.10 |
| | 0.4 | 3478 | 736 | 1.20 |
| | 0.6 | 3370 | 790 | 1.29 |
| | 0.8 | 3271 | 840 | 1.37 |
| | 1 | 3166 | 893 | 1.46 |
| | 1.2 | 3040 | 958 | 1.56 |
| | 1.4 | 3917 | 1024 | 1.67 |
| T10 | 0.2 | 3622 | 676 | 1.17 |
| | 0.4 | 3530 | 723 | 1.25 |
| | 0.6 | 3432 | 766 | 1.33 |
| | 0.8 | 3341 | 810 | 1.40 |
| | 1 | 3251 | 852 | 1.48 |
| | 1.2 | 3144 | 898 | 1.56 |
| | 1.4 | 3006 | 947 | 1.64 |

Shaded speed tap - Airflow for supplimental heat
.** (T1) and (T2) are part load only

**7.5 Ton Fan Data • Models: DSH0903W, DSH0904W, DSH0907W**

| Down Flow | | | | |
|---|---|---|---|---|
| Speed Tap | ESP | CFM | RPM | BHP |
| T1** | 0.2 | 2465 | 490 | 0.36 |
| | 0.4 | 2293 | 561 | 0.42 |
| | 0.6 | 2148 | 626 | 0.46 |
| | 0.8 | 1911 | 715 | 0.53 |
| | 1 | 1614 | 797 | 0.59 |
| | 1.2 | - | - | - |
| | 1.4 | - | - | - |
| | 1.6 | - | - | - |
| | 1.8 | - | - | - |
| T2** | 0.2 | 2465 | 499 | 0.38 |
| | 0.4 | 2325 | 567 | 0.44 |
| | 0.6 | 2182 | 632 | 0.49 |
| | 0.8 | 1993 | 705 | 0.54 |
| | 1 | 1659 | 804 | 0.62 |
| | 1.2 | 1498 | 853 | 0.66 |
| | 1.4 | - | - | - |
| | 1.6 | - | - | - |
| | 1.8 | - | - | - |
| T3 | 0.2 | 3657 | 556 | 0.93 |
| | 0.4 | 3559 | 616 | 1.03 |
| | 0.6 | 3467 | 669 | 1.12 |
| | 0.8 | 3391 | 710 | 1.19 |
| | 1 | 3290 | 761 | 1.27 |
| | 1.2 | 3176 | 816 | 1.36 |
| | 1.4 | 3058 | 868 | 1.45 |
| | 1.6 | 2888 | 937 | 1.57 |
| | 1.8 | 2785 | 975 | 1.63 |
| T4 | 0.2 | 3748 | 664 | 1.16 |
| | 0.4 | 3637 | 711 | 1.24 |
| | 0.6 | 3539 | 756 | 1.32 |
| | 0.8 | 3448 | 803 | 1.40 |
| | 1 | 3339 | 847 | 1.48 |
| | 1.2 | 3226 | 893 | 1.56 |
| | 1.4 | 3108 | 947 | 1.65 |
| | 1.6 | 3001 | 999 | 1.74 |
| | 1.8 | 2840 | 1041 | 1.82 |
| T5 | 0.2 | 3850 | 674 | 1.25 |
| | 0.4 | 3745 | 723 | 1.34 |
| | 0.6 | 3655 | 770 | 1.43 |
| | 0.8 | 3546 | 815 | 1.51 |
| | 1 | 3445 | 858 | 1.59 |
| | 1.2 | 3359 | 902 | 1.67 |
| | 1.4 | 3242 | 945 | 1.75 |
| | 1.6 | 3120 | 991 | 1.84 |
| | 1.8 | 3001 | 1042 | 1.93 |

| Horizontal Flow | | | | |
|---|---|---|---|---|
| Speed Tap | ESP | CFM | RPM | BHP |
| T1** | 0.2 | 2368 | 510 | 0.38 |
| | 0.4 | 2247 | 572 | 0.42 |
| | 0.6 | 2113 | 632 | 0.47 |
| | 0.8 | 1961 | 704 | 0.52 |
| | 1 | 1600 | 802 | 0.60 |
| | 1.2 | - | - | - |
| | 1.4 | - | - | - |
| | 1.6 | - | - | - |
| | 1.8 | - | - | - |
| T2** | 0.2 | 2449 | 504 | 0.39 |
| | 0.4 | 2330 | 571 | 0.44 |
| | 0.6 | 2181 | 638 | 0.49 |
| | 0.8 | 1991 | 59 | 0.05 |
| | 1 | 1645 | 35 | 0.03 |
| | 1.2 | - | - | - |
| | 1.4 | - | - | - |
| | 1.6 | - | - | - |
| | 1.8 | - | - | - |
| T3 | 0.2 | 3638 | 587 | 0.98 |
| | 0.4 | 3533 | 642 | 1.07 |
| | 0.6 | 3437 | 691 | 1.15 |
| | 0.8 | 3359 | 728 | 1.22 |
| | 1 | 3256 | 777 | 1.30 |
| | 1.2 | 3142 | 828 | 1.38 |
| | 1.4 | 3027 | 876 | 1.46 |
| | 1.6 | 2863 | 941 | 1.57 |
| | 1.8 | 2766 | 977 | 1.63 |
| T4 | 0.2 | 3711 | 687 | 1.20 |
| | 0.4 | 3608 | 730 | 1.27 |
| | 0.6 | 3517 | 772 | 1.35 |
| | 0.8 | 3434 | 816 | 1.42 |
| | 1 | 3334 | 856 | 1.49 |
| | 1.2 | 3231 | 900 | 1.57 |
| | 1.4 | 3125 | 951 | 1.66 |
| | 1.6 | 2986 | 1001 | 1.75 |
| | 1.8 | 2885 | 1041 | 1.82 |
| T5 | 0.2 | 3806 | 696 | 1.29 |
| | 0.4 | 3708 | 741 | 1.38 |
| | 0.6 | 3624 | 785 | 1.46 |
| | 0.8 | 3523 | 827 | 1.54 |
| | 1 | 3431 | 867 | 1.61 |
| | 1.2 | 3352 | 908 | 1.69 |
| | 1.4 | 3246 | 949 | 1.76 |
| | 1.6 | 3136 | 993 | 1.84 |
| | 1.8 | 2989 | 1041 | 1.93 |

**7.5 Ton Fan Data • Models: DSH0903W, DSH0904W, DSH0907W**

| Down Flow | | | | |
|---|---|---|---|---|
| Speed Tap | ESP | CFM | RPM | BHP |
| T6 | 0.2 | 3502 | 618 | 0.90 |
| | 0.4 | 3381 | 669 | 0.97 |
| | 0.6 | 3533 | 721 | 1.05 |
| | 0.8 | 3145 | 767 | 1.12 |
| | 1 | 3047 | 817 | 1.19 |
| | 1.2 | 2908 | 866 | 1.26 |
| | 1.4 | 2766 | 918 | 1.34 |
| | 1.6 | 2491 | 1010 | 1.47 |
| | 1.8 | - | - | - |
| T7 | 0.2 | 3670 | 637 | 1.02 |
| | 0.4 | 3542 | 686 | 1.10 |
| | 0.6 | 3430 | 737 | 1.18 |
| | 0.8 | 3312 | 785 | 1.25 |
| | 1 | 3207 | 832 | 1.33 |
| | 1.2 | 3098 | 878 | 1.40 |
| | 1.4 | 2965 | 928 | 1.48 |
| | 1.6 | 2829 | 982 | 1.57 |
| | 1.8 | 2544 | 1070 | 1.71 |
| T8 | 0.2 | 3657 | 556 | 0.93 |
| | 0.4 | 3559 | 616 | 1.03 |
| | 0.6 | 3467 | 669 | 1.12 |
| | 0.8 | 3391 | 710 | 1.19 |
| | 1 | 3290 | 761 | 1.27 |
| | 1.2 | 3176 | 816 | 1.36 |
| | 1.4 | 3058 | 868 | 1.45 |
| | 1.6 | 2888 | 937 | 1.57 |
| | 1.8 | 2785 | 975 | 1.63 |
| T9 | 0.2 | 3748 | 664 | 1.42 |
| | 0.4 | 3637 | 711 | 1.52 |
| | 0.6 | 3539 | 756 | 1.62 |
| | 0.8 | 3448 | 803 | 1.72 |
| | 1 | 3339 | 847 | 1.81 |
| | 1.2 | 3226 | 893 | 1.91 |
| | 1.4 | 3108 | 947 | 2.03 |
| | 1.6 | 3001 | 999 | 2.14 |
| | 1.8 | 2840 | 1041 | 2.23 |
| T10 | 0.2 | 3850 | 674 | 1.98 |
| | 0.4 | 3745 | 723 | 2.12 |
| | 0.6 | 3655 | 770 | 2.26 |
| | 0.8 | 3546 | 815 | 2.39 |
| | 1 | 3445 | 858 | 2.52 |
| | 1.2 | 3359 | 902 | 2.65 |
| | 1.4 | 3242 | 945 | 2.77 |
| | 1.6 | 3120 | 991 | 2.91 |
| | 1.8 | 3001 | 1042 | 3.06 |

| Horizontal Flow | | | | |
|---|---|---|---|---|
| Speed Tap | ESP | CFM | RPM | BHP |
| T6 | 0.2 | 3383 | 644 | 0.94 |
| | 0.4 | 3283 | 692 | 1.01 |
| | 0.6 | 3167 | 738 | 1.08 |
| | 0.8 | 3076 | 785 | 1.14 |
| | 1 | 2977 | 827 | 1.21 |
| | 1.2 | 2849 | 883 | 1.29 |
| | 1.4 | 2670 | 950 | 1.38 |
| | 1.6 | 2404 | 1034 | 1.51 |
| | 1.8 | - | - | - |
| T7 | 0.2 | 3521 | 665 | 1.06 |
| | 0.4 | 3422 | 713 | 1.14 |
| | 0.6 | 3325 | 756 | 1.21 |
| | 0.8 | 3217 | 802 | 1.28 |
| | 1 | 3122 | 846 | 1.35 |
| | 1.2 | 3027 | 871 | 1.39 |
| | 1.4 | 2893 | 948 | 1.51 |
| | 1.6 | 2762 | 999 | 1.59 |
| | 1.8 | 2390 | 1100 | 1.76 |
| T8 | 0.2 | 3711 | 687 | 1.15 |
| | 0.4 | 3608 | 730 | 1.22 |
| | 0.6 | 3517 | 772 | 1.29 |
| | 0.8 | 3434 | 816 | 1.36 |
| | 1 | 3334 | 856 | 1.43 |
| | 1.2 | 3231 | 900 | 1.50 |
| | 1.4 | 3125 | 951 | 1.59 |
| | 1.6 | 2986 | 1001 | 1.67 |
| | 1.8 | 2885 | 1041 | 1.74 |
| T9 | 0.2 | 3711 | 687 | 1.20 |
| | 0.4 | 3608 | 730 | 1.27 |
| | 0.6 | 3517 | 772 | 1.35 |
| | 0.8 | 3434 | 816 | 1.42 |
| | 1 | 3334 | 856 | 1.49 |
| | 1.2 | 3231 | 900 | 1.57 |
| | 1.4 | 3125 | 951 | 1.66 |
| | 1.6 | 2986 | 1001 | 1.75 |
| | 1.8 | 2885 | 1041 | 1.82 |
| T10 | 0.2 | 3806 | 696 | 1.29 |
| | 0.4 | 3708 | 741 | 1.38 |
| | 0.6 | 3624 | 785 | 1.46 |
| | 0.8 | 3523 | 827 | 1.54 |
| | 1 | 3431 | 867 | 1.61 |
| | 1.2 | 3352 | 908 | 1.69 |
| | 1.4 | 3246 | 949 | 1.76 |
| | 1.6 | 3136 | 993 | 1.84 |
| | 1.8 | 2989 | 1041 | 1.93 |

Shaded speed tap - Airflow for supplimental heat
.** (T1) and (T2) are part load only

**8.5 Ton HP Data • Models: DSH1023D, DSH1024D, DSH1027D**

| Down Flow | | | | |
|---|---|---|---|---|
| Speed Tap | ESP | CFM | RPM | BHP |
| T1** | 0.2 | 1974 | 438 | 0.23 |
| | 0.4 | 1789 | 523 | 0.27 |
| | 0.6 | - | - | - |
| | 0.8 | - | - | - |
| T2** | 0.2 | 2131 | 458 | 0.28 |
| | 0.4 | 1969 | 531 | 0.32 |
| | 0.6 | 1782 | 616 | 0.38 |
| | 0.8 | - | - | - |
| T3 | 0.2 | 3072 | 567 | 0.69 |
| | 0.4 | 2947 | 628 | 0.76 |
| | 0.6 | 2837 | 684 | 0.83 |
| | 0.8 | 2695 | 737 | 0.89 |
| T4 | 0.2 | 3711 | 638 | 1.09 |
| | 0.4 | 3592 | 691 | 1.18 |
| | 0.6 | 3430 | 740 | 1.26 |
| | 0.8 | 3391 | 786 | 1.34 |
| T5 | 0.2 | 3737 | 651 | 1.16 |
| | 0.4 | 3623 | 703 | 1.25 |
| | 0.6 | 3513 | 751 | 1.34 |
| | 0.8 | 3410 | 799 | 1.42 |
| T6 | 0.2 | 2708 | 521 | 0.49 |
| | 0.4 | - | - | - |
| | 0.6 | - | - | - |
| | 0.8 | - | - | - |
| T7 | 0.2 | 2955 | 551 | 0.62 |
| | 0.4 | 2819 | 612 | 0.68 |
| | 0.6 | 2715 | 668 | 0.75 |
| | 0.8 | - | - | - |
| T8 | 0.2 | 3072 | 567 | 0.69 |
| | 0.4 | 2947 | 628 | 0.76 |
| | 0.6 | 2837 | 684 | 0.83 |
| | 0.8 | 2695 | 737 | 0.89 |
| T9 | 0.2 | 3711 | 638 | 1.09 |
| | 0.4 | 3592 | 691 | 1.18 |
| | 0.6 | 3430 | 740 | 1.26 |
| | 0.8 | 3391 | 786 | 1.34 |
| T10 | 0.2 | 3737 | 651 | 1.16 |
| | 0.4 | 3623 | 703 | 1.25 |
| | 0.6 | 3513 | 751 | 1.34 |
| | 0.8 | 3410 | 799 | 1.42 |

| Horizontal Flow | | | | |
|---|---|---|---|---|
| Speed Tap | ESP | CFM | RPM | BHP |
| T1** | 0.2 | 1928 | 449 | 0.24 |
| | 0.4 | 1774 | 535 | 0.28 |
| | 0.6 | - | - | - |
| | 0.8 | - | - | - |
| T2** | 0.2 | - | - | - |
| | 0.4 | 1978 | 556 | 0.34 |
| | 0.6 | 1790 | 639 | 0.39 |
| | 0.8 | - | - | - |
| T3 | 0.2 | 3031 | 594 | 0.72 |
| | 0.4 | 2909 | 649 | 0.79 |
| | 0.6 | 2799 | 699 | 0.85 |
| | 0.8 | 2682 | 749 | 0.91 |
| T4 | 0.2 | 3601 | 677 | 1.15 |
| | 0.4 | 3503 | 724 | 1.23 |
| | 0.6 | 3405 | 773 | 1.31 |
| | 0.8 | 3311 | 819 | 1.39 |
| T5 | 0.2 | 3686 | 687 | 1.22 |
| | 0.4 | 3591 | 732 | 1.30 |
| | 0.6 | 3494 | 775 | 1.38 |
| | 0.8 | 3402 | 819 | 1.46 |
| T6 | 0.2 | 2675 | 543 | 0.51 |
| | 0.4 | - | - | - |
| | 0.6 | - | - | - |
| | 0.8 | - | - | - |
| T7 | 0.2 | 2914 | 572 | 0.64 |
| | 0.4 | 2797 | 630 | 0.70 |
| | 0.6 | 2680 | 681 | 0.76 |
| | 0.8 | - | - | - |
| T8 | 0.2 | 3062 | 590 | 0.72 |
| | 0.4 | 2944 | 644 | 0.78 |
| | 0.6 | 2838 | 693 | 0.84 |
| | 0.8 | 2713 | 742 | 0.90 |
| T9 | 0.2 | 3601 | 677 | 1.15 |
| | 0.4 | 3503 | 724 | 1.23 |
| | 0.6 | 3405 | 773 | 1.31 |
| | 0.8 | 3311 | 819 | 1.39 |
| T10 | 0.2 | 3686 | 687 | 1.22 |
| | 0.4 | 3591 | 732 | 1.30 |
| | 0.6 | 3494 | 775 | 1.38 |
| | 0.8 | 3402 | 819 | 1.46 |

Shaded speed tap - Airflow for supplimental heat
.** (T1) and (T2) are part load only

**8.5 Ton Fan Data • Models: DSH1023L, DSH1024L, DSH1027L**

| Down Flow | | | | |
|---|---|---|---|---|
| Speed Tap | ESP | CFM | RPM | BHP |
| T1** | 0.2 | 2298 | 473 | 0.33 |
| | 0.4 | 2147 | 549 | 0.39 |
| | 0.6 | 1967 | 619 | 0.44 |
| | 0.8 | - | - | - |
| | 1 | - | - | - |
| | 1.2 | - | - | - |
| | 1.4 | - | - | - |
| T2** | 0.2 | 2345 | 476 | 0.34 |
| | 0.4 | 2187 | 549 | 0.39 |
| | 0.6 | 2019 | 621 | 0.45 |
| | 0.8 | 1686 | 731 | 0.53 |
| | 1 | - | - | - |
| | 1.2 | - | - | - |
| | 1.4 | - | - | - |
| T3 | 0.2 | 3538 | 619 | 0.97 |
| | 0.4 | 3413 | 672 | 1.06 |
| | 0.6 | 3301 | 723 | 1.14 |
| | 0.8 | 3201 | 770 | 1.21 |
| | 1 | 3040 | 819 | 1.29 |
| | 1.2 | 2960 | 870 | 1.37 |
| | 1.4 | 2839 | 922 | 1.45 |
| T4 | 0.2 | 3711 | 638 | 1.27 |
| | 0.4 | 3592 | 691 | 1.35 |
| | 0.6 | 3489 | 740 | 1.42 |
| | 0.8 | 3391 | 786 | 1.50 |
| | 1 | 3295 | 835 | 1.58 |
| | 1.2 | 3178 | 882 | 1.67 |
| | 1.4 | 3051 | 929 | 1.78 |
| T5 | 0.2 | 4156 | 692 | 1.50 |
| | 0.4 | 4050 | 741 | 1.61 |
| | 0.6 | 3948 | 785 | 1.71 |
| | 0.8 | 3843 | 832 | 1.81 |
| | 1 | 3750 | 873 | 1.90 |
| | 1.2 | 3658 | 915 | 1.99 |
| | 1.4 | 3450 | 959 | 2.09 |
| T6 | 0.2 | 3255 | 582 | 0.78 |
| | 0.4 | 3118 | 640 | 0.86 |
| | 0.6 | 3005 | 693 | 0.93 |
| | 0.8 | 2895 | 743 | 0.99 |
| | 1 | 2755 | 799 | 1.07 |
| | 1.2 | 2755 | 799 | 1.07 |
| | 1.4 | - | - | - |
| T7 | 0.2 | 3454 | 605 | 0.91 |
| | 0.4 | 3339 | 661 | 0.99 |
| | 0.6 | 3217 | 714 | 1.07 |
| | 0.8 | 3103 | 763 | 1.14 |
| | 1 | 2983 | 815 | 1.22 |
| | 1.2 | 2858 | 867 | 1.30 |
| | 1.4 | 2705 | 923 | 1.38 |
| T8 | 0.2 | 3711 | 638 | 1.11 |
| | 0.4 | 3592 | 691 | 1.20 |
| | 0.6 | 3489 | 740 | 1.28 |
| | 0.8 | 3391 | 786 | 1.36 |
| | 1 | 3295 | 835 | 1.45 |
| | 1.2 | 3178 | 882 | 1.53 |
| | 1.4 | 3051 | 929 | 1.61 |
| T9 | 0.2 | 4211 | 671 | 1.27 |
| | 0.4 | 4098 | 712 | 1.35 |
| | 0.6 | 3967 | 751 | 1.42 |
| | 0.8 | 3835 | 792 | 1.50 |
| | 1 | 3753 | 836 | 1.58 |
| | 1.2 | 3450 | 882 | 1.67 |
| | 1.4 | 3449 | 940 | 1.78 |
| T10 | 0.2 | 4156 | 692 | 1.50 |
| | 0.4 | 4050 | 741 | 1.61 |
| | 0.6 | 3948 | 785 | 1.71 |
| | 0.8 | 3843 | 832 | 1.81 |
| | 1 | 3750 | 873 | 1.90 |
| | 1.2 | 3658 | 915 | 1.99 |
| | 1.4 | 3450 | 959 | 2.09 |

| Horizontal Flow | | | | |
|---|---|---|---|---|
| Speed Tap | ESP | CFM | RPM | BHP |
| T1** | 0.2 | 2284 | 494 | 0.35 |
| | 0.4 | 2135 | 562 | 0.40 |
| | 0.6 | 1976 | 632 | 0.45 |
| | 0.8 | - | - | - |
| | 1 | - | - | - |
| | 1.2 | - | - | - |
| | 1.4 | - | - | - |
| T2** | 0.2 | 2304 | 497 | 0.36 |
| | 0.4 | 2152 | 562 | 0.40 |
| | 0.6 | 1998 | 634 | 0.46 |
| | 0.8 | - | - | - |
| | 1 | - | - | - |
| | 1.2 | - | - | - |
| | 1.4 | - | - | - |
| T3 | 0.2 | 3466 | 652 | 1.03 |
| | 0.4 | 3361 | 701 | 1.10 |
| | 0.6 | 3261 | 744 | 1.17 |
| | 0.8 | 3176 | 790 | 1.24 |
| | 1 | 3058 | 837 | 1.32 |
| | 1.2 | 2952 | 885 | 1.39 |
| | 1.4 | 2816 | 943 | 1.48 |
| T4 | 0.2 | 3835 | 567 | 1.07 |
| | 0.4 | 3756 | 603 | 1.14 |
| | 0.6 | 3662 | 648 | 1.23 |
| | 0.8 | 3565 | 694 | 1.31 |
| | 1 | 3503 | 724 | 1.37 |
| | 1.2 | 3397 | 776 | 1.47 |
| | 1.4 | 3262 | 844 | 1.60 |
| T5 | 0.2 | 3971 | 505 | 1.10 |
| | 0.4 | 3897 | 539 | 1.17 |
| | 0.6 | 3806 | 580 | 1.26 |
| | 0.8 | 3707 | 627 | 1.36 |
| | 1 | 3653 | 652 | 1.42 |
| | 1.2 | 3551 | 701 | 1.53 |
| | 1.4 | 3422 | 764 | 1.66 |
| T6 | 0.2 | 3205 | 611 | 0.82 |
| | 0.4 | 3089 | 663 | 0.89 |
| | 0.6 | 2982 | 710 | 0.95 |
| | 0.8 | 2877 | 757 | 1.01 |
| | 1 | 2732 | 813 | 1.09 |
| | 1.2 | - | - | - |
| | 1.4 | - | - | - |
| T7 | 0.2 | 3376 | 640 | 0.96 |
| | 0.4 | 3279 | 689 | 1.03 |
| | 0.6 | 3172 | 736 | 1.10 |
| | 0.8 | 3070 | 781 | 1.17 |
| | 1 | 2959 | 831 | 1.24 |
| | 1.2 | 2836 | 881 | 1.32 |
| | 1.4 | 2650 | 955 | 1.43 |
| T8 | 0.2 | 3622 | 676 | 1.17 |
| | 0.4 | 3530 | 723 | 1.25 |
| | 0.6 | 3432 | 766 | 1.33 |
| | 0.8 | 3341 | 810 | 1.40 |
| | 1 | 3251 | 852 | 1.48 |
| | 1.2 | 3144 | 898 | 1.56 |
| | 1.4 | 3006 | 947 | 1.64 |
| T9 | 0.2 | 3835 | 567 | 1.07 |
| | 0.4 | 3756 | 603 | 1.14 |
| | 0.6 | 3662 | 648 | 1.23 |
| | 0.8 | 3565 | 694 | 1.31 |
| | 1 | 3503 | 724 | 1.37 |
| | 1.2 | 3397 | 776 | 1.47 |
| | 1.4 | 3262 | 844 | 1.60 |
| T10 | 0.2 | 3971 | 505 | 1.10 |
| | 0.4 | 3897 | 539 | 1.17 |
| | 0.6 | 3806 | 580 | 1.26 |
| | 0.8 | 3707 | 627 | 1.36 |
| | 1 | 3653 | 652 | 1.42 |
| | 1.2 | 3551 | 701 | 1.53 |
| | 1.4 | 3422 | 764 | 1.66 |

Shaded speed tap - Airflow for supplimental heat
.** (T1) and (T2) are part load only

**8.5 Ton Fan Data • Models: DSH1023W, DSH1024W, DSH1027W**

| Down Flow | | | | |
|---|---|---|---|---|
| Speed Tap | ESP | CFM | RPM | BHP |
| T1** | 0.2 | 2465 | 490 | 0.36 |
| | 0.4 | 2293 | 561 | 0.42 |
| | 0.6 | 2148 | 626 | 0.46 |
| | 0.8 | 1911 | 715 | 0.53 |
| | 1 | - | - | - |
| | 1.2 | - | - | - |
| | 1.4 | - | - | - |
| | 1.6 | - | - | - |
| | 1.8 | - | - | - |
| T2** | 0.2 | 2465 | 499 | 0.38 |
| | 0.4 | 2325 | 567 | 0.44 |
| | 0.6 | 2182 | 632 | 0.49 |
| | 0.8 | 1993 | 705 | 0.54 |
| | 1 | - | - | - |
| | 1.2 | - | - | - |
| | 1.4 | - | - | - |
| | 1.6 | - | - | - |
| | 1.8 | - | - | - |
| T3 | 0.2 | 3794 | 663 | 1.16 |
| | 0.4 | 3688 | 711 | 1.24 |
| | 0.6 | 3572 | 758 | 1.32 |
| | 0.8 | 3468 | 807 | 1.41 |
| | 1 | 3370 | 852 | 1.49 |
| | 1.2 | 3259 | 895 | 1.56 |
| | 1.4 | 3144 | 942 | 1.64 |
| | 1.6 | 3011 | 990 | 1.73 |
| | 1.8 | 2843 | 1052 | 1.84 |
| T4 | 0.2 | 4121 | 699 | 1.43 |
| | 0.4 | 4019 | 745 | 1.52 |
| | 0.6 | 3934 | 790 | 1.61 |
| | 0.8 | 3830 | 833 | 1.70 |
| | 1 | 3697 | 876 | 1.79 |
| | 1.2 | 3617 | 918 | 1.87 |
| | 1.4 | 3527 | 959 | 1.96 |
| | 1.6 | 3408 | 1002 | 2.05 |
| | 1.8 | 3262 | 1048 | 2.14 |
| T5 | 0.2 | 4262 | 718 | 1.56 |
| | 0.4 | 4164 | 761 | 1.66 |
| | 0.6 | 4060 | 805 | 1.75 |
| | 0.8 | 3966 | 851 | 1.85 |
| | 1 | 3864 | 891 | 1.94 |
| | 1.2 | 3773 | 932 | 2.03 |
| | 1.4 | 3687 | 973 | 2.12 |
| | 1.6 | 3576 | 1012 | 2.20 |
| | 1.8 | 3463 | 1055 | 2.30 |

| Horizontal Flow | | | | |
|---|---|---|---|---|
| Speed Tap | ESP | CFM | RPM | BHP |
| T1** | 0.2 | 2368 | 510 | 0.38 |
| | 0.4 | 2247 | 572 | 0.42 |
| | 0.6 | 2113 | 632 | 0.47 |
| | 0.8 | 1961 | 704 | 0.52 |
| | 1 | - | - | - |
| | 1.2 | - | - | - |
| | 1.4 | - | - | - |
| | 1.6 | - | - | - |
| | 1.8 | - | - | - |
| T2** | 0.2 | 2449 | 504 | 0.39 |
| | 0.4 | 2330 | 571 | 0.44 |
| | 0.6 | 2181 | 638 | 0.49 |
| | 0.8 | 1991 | 59 | 0.05 |
| | 1 | - | - | - |
| | 1.2 | - | - | - |
| | 1.4 | - | - | - |
| | 1.6 | - | - | - |
| | 1.8 | - | - | - |
| T3 | 0.2 | 3711 | 687 | 1.20 |
| | 0.4 | 3608 | 730 | 1.27 |
| | 0.6 | 3517 | 772 | 1.35 |
| | 0.8 | 3434 | 816 | 1.42 |
| | 1 | 3334 | 856 | 1.49 |
| | 1.2 | 3231 | 900 | 1.57 |
| | 1.4 | 3125 | 951 | 1.66 |
| | 1.6 | 2986 | 1001 | 1.75 |
| | 1.8 | 2885 | 1041 | 1.82 |
| T4 | 0.2 | 3989 | 718 | 1.47 |
| | 0.4 | 3894 | 761 | 1.55 |
| | 0.6 | 3816 | 803 | 1.64 |
| | 0.8 | 3722 | 843 | 1.72 |
| | 1 | 3602 | 883 | 1.80 |
| | 1.2 | 3529 | 922 | 1.88 |
| | 1.4 | 3449 | 961 | 1.96 |
| | 1.6 | 3343 | 1001 | 2.04 |
| | 1.8 | 3215 | 1044 | 2.13 |
| T5 | 0.2 | 4123 | 750 | 1.63 |
| | 0.4 | 4032 | 790 | 1.72 |
| | 0.6 | 3944 | 831 | 1.81 |
| | 0.8 | 3866 | 868 | 1.89 |
| | 1 | 3774 | 905 | 1.97 |
| | 1.2 | 3690 | 943 | 2.05 |
| | 1.4 | 3612 | 980 | 2.13 |
| | 1.6 | 3506 | 943 | 2.05 |
| | 1.8 | 3401 | 1068 | 2.32 |

**8.5 Ton Fan Data • Models: DSH1023W, DSH1024W, DSH1027W**

| Down Flow | | | | |
|---|---|---|---|---|
| Speed Tap | ESP | CFM | RPM | BHP |
| T6 | 0.2 | 3600 | 628 | 0.96 |
| | 0.4 | 3479 | 679 | 1.04 |
| | 0.6 | 3363 | 728 | 1.12 |
| | 0.8 | 3256 | 775 | 1.19 |
| | 1 | 3144 | 823 | 1.26 |
| | 1.2 | 3034 | 870 | 1.34 |
| | 1.4 | 2910 | 921 | 1.41 |
| | 1.6 | 2726 | 987 | 1.52 |
| | 1.8 | - | - | - |
| T7 | 0.2 | 3785 | 652 | 1.11 |
| | 0.4 | 3679 | 701 | 1.19 |
| | 0.6 | 3556 | 748 | 1.27 |
| | 0.8 | 3451 | 796 | 1.36 |
| | 1 | 3359 | 841 | 1.43 |
| | 1.2 | 3249 | 886 | 1.51 |
| | 1.4 | 3103 | 933 | 1.59 |
| | 1.6 | 2981 | 983 | 1.67 |
| | 1.8 | 2754 | 1056 | 1.80 |
| T8 | 0.2 | 3794 | 663 | 1.16 |
| | 0.4 | 3688 | 711 | 1.24 |
| | 0.6 | 3572 | 758 | 1.32 |
| | 0.8 | 3468 | 807 | 1.41 |
| | 1 | 3370 | 852 | 1.49 |
| | 1.2 | 3259 | 895 | 1.56 |
| | 1.4 | 3144 | 942 | 1.64 |
| | 1.6 | 3011 | 990 | 1.73 |
| | 1.8 | 2843 | 1052 | 1.84 |
| T9 | 0.2 | 4121 | 699 | 1.43 |
| | 0.4 | 4019 | 745 | 1.52 |
| | 0.6 | 3934 | 790 | 1.61 |
| | 0.8 | 3830 | 833 | 1.70 |
| | 1 | 3697 | 876 | 1.79 |
| | 1.2 | 3617 | 918 | 1.87 |
| | 1.4 | 3527 | 959 | 1.96 |
| | 1.6 | 3408 | 1002 | 2.05 |
| | 1.8 | 3262 | 1048 | 2.14 |
| T10 | 0.2 | 4262 | 718 | 1.56 |
| | 0.4 | 4164 | 761 | 1.66 |
| | 0.6 | 4060 | 805 | 1.75 |
| | 0.8 | 3966 | 851 | 1.85 |
| | 1 | 3864 | 891 | 1.94 |
| | 1.2 | 3773 | 932 | 2.03 |
| | 1.4 | 3687 | 973 | 2.12 |
| | 1.6 | 3576 | 1012 | 2.20 |
| | 1.8 | 3463 | 1055 | 2.30 |

| Horizontal Flow | | | | |
|---|---|---|---|---|
| Speed Tap | ESP | CFM | RPM | BHP |
| T6 | 0.2 | 3460 | 659 | 1.01 |
| | 0.4 | 3343 | 705 | 1.08 |
| | 0.6 | 3244 | 752 | 1.15 |
| | 0.8 | 3154 | 60 | 0.09 |
| | 1 | 3043 | 839 | 1.29 |
| | 1.2 | 2940 | 890 | 1.37 |
| | 1.4 | 2812 | 947 | 1.45 |
| | 1.6 | 2695 | 989 | 1.52 |
| | 1.8 | - | - | - |
| T7 | 0.2 | 3626 | 683 | 1.16 |
| | 0.4 | 3532 | 728 | 1.24 |
| | 0.6 | 3431 | 771 | 1.31 |
| | 0.8 | 3344 | 815 | 1.39 |
| | 1 | 3245 | 858 | 1.46 |
| | 1.2 | 3125 | 905 | 1.54 |
| | 1.4 | 3029 | 955 | 1.63 |
| | 1.6 | 2887 | 1011 | 1.72 |
| | 1.8 | 2690 | 1075 | 1.83 |
| T8 | 0.2 | 3711 | 687 | 1.20 |
| | 0.4 | 3608 | 730 | 1.27 |
| | 0.6 | 3517 | 772 | 1.35 |
| | 0.8 | 3434 | 816 | 1.42 |
| | 1 | 3334 | 856 | 1.49 |
| | 1.2 | 3231 | 900 | 1.57 |
| | 1.4 | 3125 | 951 | 1.66 |
| | 1.6 | 2986 | 1001 | 1.75 |
| | 1.8 | 2885 | 1041 | 1.82 |
| T9 | 0.2 | 3989 | 718 | 1.47 |
| | 0.4 | 3894 | 761 | 1.55 |
| | 0.6 | 3816 | 803 | 1.64 |
| | 0.8 | 3722 | 843 | 1.72 |
| | 1 | 3602 | 883 | 1.80 |
| | 1.2 | 3529 | 922 | 1.88 |
| | 1.4 | 3449 | 961 | 1.96 |
| | 1.6 | 3343 | 1001 | 2.04 |
| | 1.8 | 3215 | 1044 | 2.13 |
| T10 | 0.2 | 4123 | 750 | 1.63 |
| | 0.4 | 4032 | 790 | 1.72 |
| | 0.6 | 3944 | 831 | 1.81 |
| | 0.8 | 3866 | 868 | 1.89 |
| | 1 | 3774 | 905 | 1.97 |
| | 1.2 | 3690 | 943 | 2.05 |
| | 1.4 | 3612 | 980 | 2.13 |
| | 1.6 | 3506 | 943 | 2.05 |
| | 1.8 | 3401 | 1068 | 2.32 |

Shaded speed tap - Airflow for supplimental heat
.** (T1) and (T2) are part load only

**10.0 Ton HP Data • Models: DSH1203D, DSH1204D, DSH1207D**

| Down Flow | | | | |
|---|---|---|---|---|
| Speed Tap | ESP | CFM | RPM | BHP |
| T1** | 0.2 | 2356 | 466 | 0.30 |
| | 0.4 | 2189 | 549 | 0.36 |
| | 0.6 | - | - | - |
| | 0.8 | - | - | - |
| T2** | 0.2 | 3026 | 543 | 0.56 |
| | 0.4 | 2875 | 608 | 0.63 |
| | 0.6 | 2733 | 670 | 0.70 |
| | 0.8 | 2346 | 778 | 0.81 |
| T3 | 0.2 | 4008 | 649 | 1.16 |
| | 0.4 | 3879 | 704 | 1.26 |
| | 0.6 | 3759 | 758 | 1.35 |
| | 0.8 | 3664 | 807 | 1.44 |
| T4 | 0.2 | 4152 | 693 | 1.33 |
| | 0.4 | 4056 | 746 | 1.44 |
| | 0.6 | 3940 | 793 | 1.53 |
| | 0.8 | 3821 | 846 | 1.63 |
| T5 | 0.2 | 4430 | 697 | 1.49 |
| | 0.4 | 4314 | 746 | 1.60 |
| | 0.6 | 4171 | 794 | 1.70 |
| | 0.8 | 4054 | 842 | 1.80 |
| T6 | 0.2 | 3203 | 555 | 0.64 |
| | 0.4 | - | - | - |
| | 0.6 | - | - | - |
| | 0.8 | - | - | - |
| T7 | 0.2 | 3490 | 588 | 0.79 |
| | 0.4 | 3331 | 645 | 0.87 |
| | 0.6 | 3211 | 704 | 0.95 |
| | 0.8 | - | - | - |
| T8 | 0.2 | 3656 | 606 | 0.88 |
| | 0.4 | 3519 | 664 | 0.96 |
| | 0.6 | 3388 | 721 | 1.04 |
| | 0.8 | 3200 | 773 | 1.12 |
| T9 | 0.2 | 4152 | 693 | 1.33 |
| | 0.4 | 4056 | 746 | 1.44 |
| | 0.6 | 3940 | 793 | 1.53 |
| | 0.8 | 3821 | 846 | 1.63 |
| T10 | 0.2 | 4430 | 697 | 1.49 |
| | 0.4 | 4314 | 746 | 1.60 |
| | 0.6 | 4171 | 794 | 1.70 |
| | 0.8 | 4054 | 842 | 1.80 |

| Horizontal Flow | | | | |
|---|---|---|---|---|
| Speed Tap | ESP | CFM | RPM | BHP |
| T1** | 0.2 | 2308 | 469 | 0.30 |
| | 0.4 | 1969 | 586 | 0.38 |
| | 0.6 | - | - | - |
| | 0.8 | - | - | - |
| T2** | 0.2 | 2962 | 549 | 0.57 |
| | 0.4 | 2819 | 612 | 0.64 |
| | 0.6 | 2673 | 671 | 0.70 |
| | 0.8 | 2301 | 772 | 0.80 |
| T3 | 0.2 | 3897 | 669 | 1.20 |
| | 0.4 | 3800 | 718 | 1.28 |
| | 0.6 | 3694 | 765 | 1.37 |
| | 0.8 | 3588 | 814 | 1.45 |
| T4 | 0.2 | 4102 | 684 | 1.32 |
| | 0.4 | 4015 | 735 | 1.41 |
| | 0.6 | 3911 | 778 | 1.50 |
| | 0.8 | 3804 | 826 | 1.59 |
| T5 | 0.2 | 4287 | 716 | 1.54 |
| | 0.4 | 4193 | 760 | 1.63 |
| | 0.6 | 4097 | 808 | 1.73 |
| | 0.8 | 3995 | 849 | 1.82 |
| T6 | 0.2 | 3154 | 572 | 0.66 |
| | 0.4 | - | - | - |
| | 0.6 | - | - | - |
| | 0.8 | - | - | - |
| T7 | 0.2 | 3405 | 604 | 0.81 |
| | 0.4 | 3281 | 660 | 0.89 |
| | 0.6 | 3150 | 720 | 0.97 |
| | 0.8 | - | - | - |
| T8 | 0.2 | 3535 | 621 | 0.90 |
| | 0.4 | 3417 | 676 | 0.98 |
| | 0.6 | 3299 | 730 | 1.06 |
| | 0.8 | 3161 | 791 | 1.14 |
| T9 | 0.2 | 4102 | 684 | 1.32 |
| | 0.4 | 4015 | 735 | 1.41 |
| | 0.6 | 3911 | 778 | 1.50 |
| | 0.8 | 3804 | 826 | 1.59 |
| T10 | 0.2 | 4287 | 716 | 1.54 |
| | 0.4 | 4193 | 760 | 1.63 |
| | 0.6 | 4097 | 808 | 1.73 |
| | 0.8 | 3995 | 849 | 1.82 |

Shaded speed tap - Airflow for supplimental heat
.** (T1) and (T2) are part load only

**10.0 Ton Fan Data • DSH1203L, DSH1204L, DSH1207L**

| Down Flow | | | | |
|---|---|---|---|---|
| Speed Tap | ESP | CFM | RPM | BHP |
| T1** | 0.2 | 2452 | 481 | 0.35 |
| | 0.4 | 2285 | 561 | 0.40 |
| | 0.6 | - | - | - |
| | 0.8 | - | - | - |
| | 1 | - | - | - |
| | 1.2 | - | - | - |
| | 1.4 | - | - | - |
| T2** | 0.2 | 2620 | 496 | 0.39 |
| | 0.4 | 2455 | 571 | 0.45 |
| | 0.6 | 2061 | 685 | 0.54 |
| | 0.8 | - | - | - |
| | 1 | - | - | - |
| | 1.2 | - | - | - |
| | 1.4 | - | - | - |
| T3 | 0.2 | 4315 | 689 | 1.41 |
| | 0.4 | 4156 | 736 | 1.51 |
| | 0.6 | 4047 | 787 | 1.61 |
| | 0.8 | 3941 | 838 | 1.72 |
| | 1 | 3828 | 881 | 1.81 |
| | 1.2 | 3710 | 929 | 1.91 |
| | 1.4 | 3369 | 1029 | 2.11 |
| T4 | 0.2 | 4501 | 714 | 1.61 |
| | 0.4 | 4393 | 759 | 1.71 |
| | 0.6 | 4279 | 809 | 1.82 |
| | 0.8 | 4142 | 857 | 1.93 |
| | 1 | 4037 | 900 | 2.03 |
| | 1.2 | 3930 | 945 | 2.13 |
| | 1.4 | 3786 | 995 | 2.24 |
| T5 | 0.2 | 4687 | 732 | 1.78 |
| | 0.4 | 4584 | 777 | 1.89 |
| | 0.6 | 4466 | 825 | 2.00 |
| | 0.8 | 4361 | 872 | 2.12 |
| | 1 | 4246 | 916 | 2.22 |
| | 1.2 | 4120 | 957 | 2.32 |
| | 1.4 | 3996 | 1000 | 2.43 |
| T6 | 0.2 | 3842 | 643 | 1.08 |
| | 0.4 | 3712 | 697 | 1.17 |
| | 0.6 | 3600 | 751 | 1.26 |
| | 0.8 | 3477 | 800 | 1.34 |
| | 1 | 3353 | 855 | 1.44 |
| | 1.2 | - | - | - |
| | 1.4 | - | - | - |
| T7 | 0.2 | 4125 | 675 | 1.30 |
| | 0.4 | 4012 | 725 | 1.40 |
| | 0.6 | 3896 | 776 | 1.49 |
| | 0.8 | 3789 | 826 | 1.59 |
| | 1 | 3679 | 873 | 1.68 |
| | 1.2 | 3519 | 928 | 1.79 |
| | 1.4 | 3146 | 1027 | 1.98 |
| T8 | 0.2 | 4315 | 689 | 1.41 |
| | 0.4 | 4156 | 736 | 1.51 |
| | 0.6 | 4047 | 787 | 1.61 |
| | 0.8 | 3941 | 838 | 1.72 |
| | 1 | 3828 | 881 | 1.81 |
| | 1.2 | 3710 | 929 | 1.91 |
| | 1.4 | 3369 | 1029 | 2.11 |
| T9 | 0.2 | 4501 | 714 | 1.61 |
| | 0.4 | 4393 | 759 | 1.71 |
| | 0.6 | 4279 | 809 | 1.82 |
| | 0.8 | 4142 | 857 | 1.93 |
| | 1 | 4037 | 900 | 2.03 |
| | 1.2 | 3930 | 945 | 2.13 |
| | 1.4 | 3786 | 995 | 2.24 |
| T10 | 0.2 | 4687 | 732 | 1.78 |
| | 0.4 | 4584 | 777 | 1.89 |
| | 0.6 | 4466 | 825 | 2.00 |
| | 0.8 | 4361 | 872 | 2.12 |
| | 1 | 4246 | 916 | 2.22 |
| | 1.2 | 4120 | 957 | 2.32 |
| | 1.4 | 3996 | 1000 | 2.43 |

| Horizontal Flow | | | | |
|---|---|---|---|---|
| Speed Tap | ESP | CFM | RPM | BHP |
| T1** | 0.2 | 2457 | 493 | 0.35 |
| | 0.4 | 2301 | 571 | 0.41 |
| | 0.6 | - | - | - |
| | 0.8 | - | - | - |
| | 1 | - | - | - |
| | 1.2 | - | - | - |
| | 1.4 | - | - | - |
| T2** | 0.2 | 2577 | 597 | 0.47 |
| | 0.4 | 2435 | 650 | 0.51 |
| | 0.6 | 2053 | 735 | 0.58 |
| | 0.8 | - | - | - |
| | 1 | - | - | - |
| | 1.2 | - | - | - |
| | 1.4 | - | - | - |
| T3 | 0.2 | 4277 | 696 | 1.43 |
| | 0.4 | 4174 | 739 | 1.51 |
| | 0.6 | 4076 | 785 | 1.61 |
| | 0.8 | 3970 | 831 | 1.71 |
| | 1 | 3822 | 888 | 1.82 |
| | 1.2 | 3702 | 938 | 1.92 |
| | 1.4 | 3427 | 1019 | 2.09 |
| T4 | 0.2 | 4477 | 719 | 1.62 |
| | 0.4 | 4373 | 763 | 1.72 |
| | 0.6 | 4276 | 808 | 1.82 |
| | 0.8 | 4180 | 853 | 1.92 |
| | 1 | 4049 | 901 | 2.03 |
| | 1.2 | 3933 | 950 | 2.14 |
| | 1.4 | 3791 | 1001 | 2.25 |
| T5 | 0.2 | 4669 | 749 | 1.82 |
| | 0.4 | 4559 | 794 | 1.93 |
| | 0.6 | 4466 | 836 | 2.03 |
| | 0.8 | 4372 | 876 | 2.13 |
| | 1 | 4226 | 924 | 2.24 |
| | 1.2 | 4126 | 970 | 2.35 |
| | 1.4 | 4002 | 1010 | 2.45 |
| T6 | 0.2 | 3831 | 654 | 1.10 |
| | 0.4 | 3730 | 703 | 1.18 |
| | 0.6 | 3626 | 751 | 1.26 |
| | 0.8 | 3503 | 803 | 1.35 |
| | 1 | 3377 | 859 | 1.44 |
| | 1.2 | - | - | - |
| | 1.4 | - | - | - |
| T7 | 0.2 | 4102 | 684 | 1.32 |
| | 0.4 | 4015 | 735 | 1.41 |
| | 0.6 | 3911 | 778 | 1.50 |
| | 0.8 | 3804 | 826 | 1.59 |
| | 1 | 3700 | 875 | 1.68 |
| | 1.2 | 3540 | 933 | 1.80 |
| | 1.4 | 3162 | 1028 | 1.98 |
| T8 | 0.2 | 4277 | 696 | 1.43 |
| | 0.4 | 4174 | 739 | 1.51 |
| | 0.6 | 4076 | 785 | 1.61 |
| | 0.8 | 3970 | 831 | 1.71 |
| | 1 | 3822 | 888 | 1.82 |
| | 1.2 | 3702 | 938 | 1.92 |
| | 1.4 | 3427 | 1019 | 2.09 |
| T9 | 0.2 | 4477 | 719 | 1.62 |
| | 0.4 | 4373 | 763 | 1.72 |
| | 0.6 | 4276 | 808 | 1.82 |
| | 0.8 | 4180 | 853 | 1.92 |
| | 1 | 4049 | 901 | 2.03 |
| | 1.2 | 3933 | 950 | 2.14 |
| | 1.4 | 3791 | 1001 | 2.25 |
| T10 | 0.2 | 4669 | 749 | 1.82 |
| | 0.4 | 4559 | 794 | 1.93 |
| | 0.6 | 4466 | 836 | 2.03 |
| | 0.8 | 4372 | 876 | 2.13 |
| | 1 | 4226 | 924 | 2.24 |
| | 1.2 | 4126 | 970 | 2.35 |
| | 1.4 | 4002 | 1010 | 2.45 |

Shaded speed tap - Airflow for supplimental heat
.** (T1) and (T2) are part load only

**10.0 Ton Fan Data • Models: DSH1203W, DSH1204W, DSH1207W**

| Down Flow | | | | |
|---|---|---|---|---|
| Speed Tap | ESP | CFM | RPM | BHP |
| T1** | 0.2 | 2682 | 504 | 0.45 |
| | 0.4 | 2553 | 577 | 0.51 |
| | 0.6 | 2181 | 691 | 0.61 |
| | 0.8 | - | - | - |
| | 1 | - | - | - |
| | 1.2 | - | - | - |
| | 1.4 | - | - | - |
| | 1.6 | - | - | - |
| | 1.8 | - | - | - |
| T2** | 0.2 | 2778 | 514 | 0.47 |
| | 0.4 | 2633 | 583 | 0.53 |
| | 0.6 | 2246 | 698 | 0.64 |
| | 0.8 | 2046 | 751 | 0.68 |
| | 1 | - | - | - |
| | 1.2 | - | - | - |
| | 1.4 | - | - | - |
| | 1.6 | - | - | - |
| | 1.8 | - | - | - |
| T3 | 0.2 | 4809 | 751 | 1.68 |
| | 0.4 | 4693 | 797 | 1.78 |
| | 0.6 | 4579 | 840 | 1.88 |
| | 0.8 | 4480 | 883 | 1.97 |
| | 1 | 4374 | 920 | 2.05 |
| | 1.2 | 4234 | 962 | 2.15 |
| | 1.4 | 4107 | 1004 | 2.24 |
| | 1.6 | 3846 | 1086 | 2.43 |
| | 1.8 | 3558 | 1151 | 2.57 |
| T4 | 0.2 | 4992 | 772 | 1.85 |
| | 0.4 | 4885 | 818 | 1.96 |
| | 0.6 | 4765 | 857 | 2.05 |
| | 0.8 | 4663 | 900 | 2.16 |
| | 1 | 4556 | 937 | 2.25 |
| | 1.2 | 4463 | 977 | 2.34 |
| | 1.4 | 4340 | 1016 | 2.44 |
| | 1.6 | 4146 | 1076 | 2.58 |
| | 1.8 | 3833 | 1159 | 2.78 |
| T5 | 0.2 | 5194 | 643 | 1.64 |
| | 0.4 | 5093 | 676 | 1.72 |
| | 0.6 | 4988 | 710 | 1.81 |
| | 0.8 | 4867 | 749 | 1.91 |
| | 1 | 4769 | 781 | 1.99 |
| | 1.2 | 4659 | 816 | 2.08 |
| | 1.4 | 4543 | 854 | 2.18 |
| | 1.6 | 4477 | 875 | 2.23 |
| | 1.8 | 4050 | 997 | 2.54 |

| Horizontal Flow | | | | |
|---|---|---|---|---|
| Speed Tap | ESP | CFM | RPM | BHP |
| T1** | 0.2 | 2701 | 550 | 0.49 |
| | 0.4 | 2631 | 586 | 0.52 |
| | 0.6 | 2304 | 701 | 0.62 |
| | 0.8 | 2163 | 750 | 0.66 |
| | 1 | - | - | - |
| | 1.2 | - | - | - |
| | 1.4 | - | - | - |
| | 1.6 | - | - | - |
| | 1.8 | - | - | - |
| T2** | 0.2 | 2827 | 532 | 0.48 |
| | 0.4 | 2693 | 594 | 0.54 |
| | 0.6 | 2355 | 705 | 0.64 |
| | 0.8 | 2193 | 759 | 0.69 |
| | 1 | 2068 | 806 | 0.73 |
| | 1.2 | - | - | - |
| | 1.4 | - | - | - |
| | 1.6 | - | - | - |
| | 1.8 | - | - | - |
| T3 | 0.2 | 4683 | 789 | 1.76 |
| | 0.4 | 4593 | 814 | 1.82 |
| | 0.6 | 4497 | 855 | 1.91 |
| | 0.8 | 4388 | 894 | 2.00 |
| | 1 | 4297 | 932 | 2.08 |
| | 1.2 | 4167 | 972 | 2.17 |
| | 1.4 | 4085 | 1004 | 2.24 |
| | 1.6 | 3836 | 1089 | 2.43 |
| | 1.8 | 3553 | 1153 | 2.58 |
| T4 | 0.2 | 4878 | 798 | 1.91 |
| | 0.4 | 4779 | 837 | 2.01 |
| | 0.6 | 4692 | 874 | 2.10 |
| | 0.8 | 4580 | 912 | 2.19 |
| | 1 | 4491 | 951 | 2.28 |
| | 1.2 | 4379 | 988 | 2.37 |
| | 1.4 | 4280 | 11 | 0.03 |
| | 1.6 | 4170 | 1057 | 2.53 |
| | 1.8 | 3800 | 1163 | 2.79 |
| T5 | 0.2 | 5040 | 676 | 1.72 |
| | 0.4 | 4950 | 706 | 1.80 |
| | 0.6 | 4855 | 738 | 1.88 |
| | 0.8 | 4746 | 774 | 1.97 |
| | 1 | 4657 | 803 | 2.05 |
| | 1.2 | 4559 | 836 | 2.13 |
| | 1.4 | 4454 | 871 | 2.22 |
| | 1.6 | 4394 | 891 | 2.27 |
| | 1.8 | 4055 | 1004 | 2.56 |

**10.0 Ton Fan Data • Models: DSH1203W, DSH1204W, DSH1207W**

| Down Flow | | | | |
|---|---|---|---|---|
| Speed Tap | ESP | CFM | RPM | BHP |
| T6 | 0.2 | 4525 | 714 | 1.41 |
| | 0.4 | 4413 | 760 | 1.50 |
| | 0.6 | 4282 | 807 | 1.60 |
| | 0.8 | 4143 | 853 | 1.69 |
| | 1 | 4039 | 894 | 1.77 |
| | 1.2 | 3913 | 936 | 1.85 |
| | 1.4 | 3688 | 1013 | 2.00 |
| | 1.6 | 3352 | 1089 | 2.15 |
| | 1.8 | 3210 | 1126 | 2.23 |
| T7 | 0.2 | 4654 | 732 | 1.53 |
| | 0.4 | 4529 | 777 | 1.62 |
| | 0.6 | 4414 | 823 | 1.72 |
| | 0.8 | 4299 | 864 | 1.81 |
| | 1 | 4170 | 907 | 1.89 |
| | 1.2 | 4063 | 949 | 1.98 |
| | 1.4 | 3869 | 1012 | 2.12 |
| | 1.6 | 3543 | 1093 | 2.28 |
| | 1.8 | 3369 | 1139 | 2.38 |
| T8 | 0.2 | 4809 | 751 | 1.68 |
| | 0.4 | 4693 | 797 | 1.78 |
| | 0.6 | 4579 | 840 | 1.88 |
| | 0.8 | 4480 | 883 | 1.97 |
| | 1 | 4374 | 920 | 2.05 |
| | 1.2 | 4234 | 962 | 2.15 |
| | 1.4 | 4107 | 1004 | 2.24 |
| | 1.6 | 3846 | 1086 | 2.43 |
| | 1.8 | 3558 | 1151 | 2.57 |
| T9 | 0.2 | 4992 | 772 | 1.85 |
| | 0.4 | 4885 | 818 | 1.96 |
| | 0.6 | 4765 | 857 | 2.05 |
| | 0.8 | 4663 | 900 | 2.16 |
| | 1 | 4556 | 937 | 2.25 |
| | 1.2 | 4463 | 977 | 2.34 |
| | 1.4 | 4340 | 1016 | 2.44 |
| | 1.6 | 4146 | 1076 | 2.58 |
| | 1.8 | 3833 | 1159 | 2.78 |
| T10 | 0.2 | 5194 | 643 | 1.64 |
| | 0.4 | 5093 | 676 | 1.72 |
| | 0.6 | 4988 | 710 | 1.81 |
| | 0.8 | 4867 | 749 | 1.91 |
| | 1 | 4769 | 781 | 1.99 |
| | 1.2 | 4659 | 816 | 2.08 |
| | 1.4 | 4543 | 854 | 2.18 |
| | 1.6 | 4477 | 875 | 2.23 |
| | 1.8 | 4050 | 997 | 2.54 |

| Horizontal Flow | | | | |
|---|---|---|---|---|
| Speed Tap | ESP | CFM | RPM | BHP |
| T6 | 0.2 | 4277 | 729 | 1.44 |
| | 0.4 | 4146 | 775 | 1.53 |
| | 0.6 | 4035 | 822 | 1.62 |
| | 0.8 | 3923 | 865 | 1.71 |
| | 1 | 3810 | 913 | 1.80 |
| | 1.2 | 3657 | 965 | 1.91 |
| | 1.4 | 3353 | 1048 | 2.07 |
| | 1.6 | 3157 | 1098 | 2.17 |
| | 1.8 | 3024 | 1130 | 2.23 |
| T7 | 0.2 | 4391 | 746 | 1.56 |
| | 0.4 | 4255 | 791 | 1.65 |
| | 0.6 | 4158 | 836 | 1.75 |
| | 0.8 | 4045 | 879 | 1.84 |
| | 1 | 3927 | 923 | 1.93 |
| | 1.2 | 3797 | 976 | 2.04 |
| | 1.4 | 3597 | 1035 | 2.16 |
| | 1.6 | 3287 | 1110 | 2.32 |
| | 1.8 | 3155 | 1146 | 2.40 |
| T8 | 0.2 | 4683 | 789 | 1.76 |
| | 0.4 | 4593 | 814 | 1.82 |
| | 0.6 | 4497 | 855 | 1.91 |
| | 0.8 | 4388 | 894 | 2.00 |
| | 1 | 4297 | 932 | 2.08 |
| | 1.2 | 4167 | 972 | 2.17 |
| | 1.4 | 4085 | 1004 | 2.24 |
| | 1.6 | 3836 | 1089 | 2.43 |
| | 1.8 | 3553 | 1153 | 2.58 |
| T9 | 0.2 | 4878 | 798 | 1.91 |
| | 0.4 | 4779 | 837 | 2.01 |
| | 0.6 | 4692 | 874 | 2.10 |
| | 0.8 | 4580 | 912 | 2.19 |
| | 1 | 4491 | 951 | 2.28 |
| | 1.2 | 44 | 988 | 2.37 |
| | 1.4 | 4280 | 11 | 0.03 |
| | 1.6 | 4170 | 1057 | 2.53 |
| | 1.8 | 3800 | 1163 | 2.79 |
| T10 | 0.2 | 5040 | 676 | 1.72 |
| | 0.4 | 4950 | 706 | 1.80 |
| | 0.6 | 4855 | 738 | 1.88 |
| | 0.8 | 4746 | 774 | 1.97 |
| | 1 | 4657 | 803 | 2.05 |
| | 1.2 | 4559 | 836 | 2.13 |
| | 1.4 | 4454 | 871 | 2.22 |
| | 1.6 | 4394 | 891 | 2.27 |
| | 1.8 | 4055 | 1004 | 2.56 |

Shaded speed tap - Airflow for supplimental heat
.** (T1) and (T2) are part load only

# Static Pressure

| 7.5-10 TONS | | |
|---|---|---|
| DOWNFLOW ECONOMIZER PRESSURE DROP | | |
| Cabinet | CFM | SP in. wg. |
| 7.5 Ton | 2250 | .04" |
| | 3000 | .07" |
| | 3750 | .11" |
| 8.5 Ton | 2550 | .06" |
| | 3400 | .10" |
| | 4250 | .16" |
| 10 Ton | 3000 | .08" |
| | 4000 | .13" |
| | 5000 | .22" |

| 7.5-10 TONS | | |
|---|---|---|
| HORIZONTAL ECONOMIZER PRESSURE DROP | | |
| Cabinet | CFM | SP in. wg. |
| 7.5 Ton | 2250 | .05" |
| | 3000 | .07" |
| | 3750 | .13" |
| 8.5 Ton | 2550 | .07" |
| | 3400 | .13" |
| | 4250 | .18" |
| 10 Ton | 3000 | .07" |
| | 4000 | .12" |
| | 5000 | .19" |

# Heating Data

**DSH090** **100 % Capacity**

| | OUTDOOR AMBIENT TEMPERATURE | | | | | | | | | | | | | | | | |
|---|---|---|---|---|---|---|---|---|---|---|---|---|---|---|---|---|---|
| | 65 | 60 | 55 | 50 | 47 | 45 | 40 | 35 | 30 | 25 | 20 | 17 | 15 | 10 | 5 | 0 | -5 |
| MBh | 109.62 | 102.73 | 95.95 | 89.28 | 85.00 | 81.90 | 73.94 | 66.54 | 60.49 | 56.03 | 52.76 | 51.00 | 48.73 | 43.07 | 37.40 | 31.73 | 26.07 |
| T/R | 32.53 | 30.78 | 29.03 | 27.29 | 26.50 | 25.28 | 22.82 | 20.54 | 18.67 | 17.29 | 16.28 | 15.74 | 15.04 | 13.29 | 11.54 | 9.79 | 8.04 |
| KW | 7.74 | 7.62 | 7.51 | 7.40 | 7.08 | 7.28 | 7.17 | 7.05 | 6.94 | 6.83 | 6.71 | 6.64 | 6.60 | 6.48 | 6.37 | 6.26 | 6.14 |
| AMPS | 30.5 | 30.0 | 29.5 | 29.1 | 27.7 | 28.6 | 28.1 | 27.6 | 27.1 | 26.6 | 26.1 | 25.8 | 25.6 | 25.1 | 24.6 | 24.1 | 23.6 |
| COP | 4.15 | 3.95 | 3.74 | 3.54 | 3.40 | 3.30 | 3.02 | 2.76 | 2.55 | 2.41 | 2.30 | 2.25 | 2.16 | 1.95 | 1.72 | 1.49 | 1.24 |
| Hi PR | 382 | 369 | 357 | 344 | 337 | 332 | 320 | 307 | 295 | 282 | 270 | 263 | 258 | 245 | 233 | 220 | 208 |
| LO PR | 137 | 128 | 120 | 111 | 106 | 103 | 94 | 86 | 77 | 69 | 60 | 55 | 52 | 43 | 35 | 26 | 18 |

**DSH102** **100 % Capacity**

| | OUTDOOR AMBIENT TEMPERATURE | | | | | | | | | | | | | | | | |
|---|---|---|---|---|---|---|---|---|---|---|---|---|---|---|---|---|---|
| | 65 | 60 | 55 | 50 | 47 | 45 | 40 | 35 | 30 | 25 | 20 | 17 | 15 | 10 | 5 | 0 | -5 |
| MBh | 128.34 | 120.41 | 112.61 | 104.94 | 100.00 | 96.43 | 87.35 | 78.84 | 71.87 | 66.75 | 63.01 | 61.00 | 58.40 | 51.90 | 45.40 | 38.90 | 32.40 |
| T/R | 38.09 | 36.08 | 34.08 | 32.07 | 30.87 | 29.77 | 26.96 | 24.33 | 22.18 | 20.60 | 19.45 | 18.83 | 18.02 | 16.02 | 14.01 | 12.01 | 10.00 |
| KW | 9.02 | 8.91 | 8.80 | 8.69 | 8.62 | 8.58 | 8.46 | 8.35 | 8.24 | 8.13 | 8.01 | 7.95 | 7.90 | 7.79 | 7.68 | 7.56 | 7.45 |
| AMPS | 35.4 | 34.9 | 34.5 | 34.0 | 33.7 | 33.5 | 33.0 | 32.5 | 32.0 | 31.5 | 31.0 | 30.7 | 30.6 | 30.1 | 29.6 | 29.1 | 28.6 |
| COP | 4.17 | 3.96 | 3.75 | 3.54 | 3.40 | 3.30 | 3.03 | 2.77 | 2.56 | 2.41 | 2.30 | 2.25 | 2.17 | 1.95 | 1.73 | 1.51 | 1.27 |
| Hi PR | 390 | 377 | 364 | 352 | 344 | 339 | 326 | 314 | 301 | 288 | 276 | 268 | 263 | 250 | 238 | 225 | 212 |
| LO PR | 131 | 123 | 115 | 107 | 102 | 99 | 91 | 82 | 74 | 66 | 58 | 53 | 50 | 41 | 33 | 25 | 17 |

**DSH120** **100 % Capacity**

| | OUTDOOR AMBIENT TEMPERATURE | | | | | | | | | | | | | | | | |
|---|---|---|---|---|---|---|---|---|---|---|---|---|---|---|---|---|---|
| | 65 | 60 | 55 | 50 | 47 | 45 | 40 | 35 | 30 | 25 | 20 | 17 | 15 | 10 | 5 | 0 | -5 |
| MBh | 152.46 | 142.24 | 132.19 | 122.31 | 116.00 | 111.23 | 99.23 | 88.27 | 79.34 | 72.67 | 67.68 | 65.00 | 61.60 | 53.10 | 44.60 | 36.10 | 27.60 |
| T/R | 35.26 | 33.22 | 31.17 | 29.13 | 27.90 | 26.75 | 23.87 | 21.23 | 19.08 | 17.48 | 16.28 | 15.63 | 14.81 | 12.77 | 10.73 | 8.68 | 6.64 |
| KW | 10.92 | 10.66 | 10.41 | 10.15 | 10.00 | 9.90 | 9.64 | 9.39 | 9.13 | 8.88 | 8.62 | 8.47 | 8.36 | 8.11 | 7.85 | 7.60 | 7.34 |
| AMPS | 41.0 | 39.9 | 38.8 | 37.6 | 37.0 | 36.5 | 35.4 | 34.3 | 33.2 | 32.1 | 31.0 | 30.3 | 29.9 | 28.8 | 27.6 | 26.5 | 25.4 |
| COP | 4.09 | 3.91 | 3.72 | 3.53 | 3.40 | 3.29 | 3.02 | 2.76 | 2.55 | 2.40 | 2.30 | 2.25 | 2.16 | 1.92 | 1.66 | 1.39 | 1.10 |
| Hi PR | 391 | 378 | 365 | 353 | 345 | 340 | 327 | 314 | 302 | 289 | 276 | 269 | 264 | 251 | 238 | 226 | 213 |
| LO PR | 139 | 131 | 122 | 113 | 108 | 105 | 96 | 87 | 79 | 70 | 61 | 56 | 53 | 44 | 35 | 27 | 18 |

Calculations are based on nominal CFM and 70 °F indoor dry bulb.

Amps = Outdoor unit amps (comp.+fan)

Note: Shaded area is AHRI Rating Conditions at 47°F outdoor ambient temperature

kW = Total system power

# Electrical Data

| Model Number | Electrical Rating | Compressor | | | Outdoor Fan Motor | | | Indoor Fan Motor | | | Optional Electric Heat | | | Optional Powered Convienience Outlet | Optional Power Exhaust | Power Supply | |
|---|---|---|---|---|---|---|---|---|---|---|---|---|---|---|---|---|---|
| | | QTY | RLA | LRA | QTY | HP | FLA | QTY | HP | FLA | PART # | KW* | FLA | FLA | FLA | MCA | MOP |
| DSH0903D | 208/230/3/60 | 2 | 12.2 | 120 | 2 | 0.33 | 2.0 | 1 | 2.4 | 8.0 | - | - | - | - | - | 39.4/39.4 | 50/50 |
| | | | | | | | | | | | - | - | - | 9.6/8.7 | - | 49.0/48.1 | 60/60 |
| | | | | | | | | | | | - | - | - | - | 3.3/3.0 (2.4) | 42.7/42.4 | 50/50 |
| | | | | | | | | | | | - | - | - | 9.6/8.7 | 3.3/3.0 (2.4) | 52.3/51.1 | 60/60 |
| | | | | | | | | | | | EH*D-3M15 | 11.3/15.0 | 31.3/36.1 | - | - | 78.5/84.5 | 80/90 |
| | | | | | | | | | | | | | | 9.6/8.7 | - | 88.1/93.2 | 90/100 |
| | | | | | | | | | | | | | | - | 3.3/3.0 (2.4) | 81.8/87.5 | 90/90 |
| | | | | | | | | | | | | | | 9.6/8.7 | 3.3/3.0 (2.4) | 91.4/96.2 | 100/100 |
| | | | | | | | | | | | EH*D-3M30 | 22.5/30.0 | 62.5/72.2 | - | - | 118/130 | 125/150 |
| | | | | | | | | | | | | | | 9.6/8.7 | - | 127/138 | 150/150 |
| | | | | | | | | | | | | | | - | 3.3/3.0 (2.4) | 121/133 | 125/150 |
| | | | | | | | | | | | | | | 9.6/8.7 | 3.3/3.0 (2.4) | 130/141 | 150/150 |
| | | | | | | | | | | | EH*D-3M45 | 33.8/45.0 | 93.8/108 | - | - | 157/175 | 175/175 |
| | | | | | | | | | | | | | | 9.6/8.7 | - | 166/183 | 175/200 |
| | | | | | | | | | | | | | | - | 3.3/3.0 (2.4) | 160/178 | 175/200 |
| | | | | | | | | | | | | | | 9.6/8.7 | 3.3/3.0 (2.4) | 170/186 | 175/200 |
| DSH0903L | 208/230/3/60 | 2 | 12.2 | 120 | 2 | 0.33 | 2.0 | 1 | 2.4 | 8.0 | - | - | - | - | - | 39.4/39.4 | 50/50 |
| | | | | | | | | | | | - | - | - | 9.6/8.7 | - | 49.0/48.1 | 60/60 |
| | | | | | | | | | | | - | - | - | - | 3.3/3.0 (2.4) | 42.7/42.4 | 50/50 |
| | | | | | | | | | | | - | - | - | 9.6/8.7 | 3.3/3.0 (2.4) | 52.3/51.1 | 60/60 |
| | | | | | | | | | | | EH*D-3M15 | 11.3/15.0 | 31.3/36.1 | - | - | 78.5/84.5 | 80/90 |
| | | | | | | | | | | | | | | 9.6/8.7 | - | 88.1/93.2 | 90/100 |
| | | | | | | | | | | | | | | - | 3.3/3.0 (2.4) | 81.8/87.5 | 90/90 |
| | | | | | | | | | | | | | | 9.6/8.7 | 3.3/3.0 (2.4) | 91.4/96.2 | 100/100 |
| | | | | | | | | | | | EH*D-3M30 | 22.5/30.0 | 62.5/72.2 | - | - | 118/130 | 125/150 |
| | | | | | | | | | | | | | | 9.6/8.7 | - | 127/138 | 150/150 |
| | | | | | | | | | | | | | | - | 3.3/3.0 (2.4) | 121/133 | 125/150 |
| | | | | | | | | | | | | | | 9.6/8.7 | 3.3/3.0 (2.4) | 130/141 | 150/150 |
| | | | | | | | | | | | EH*D-3M45 | 33.8/45.0 | 93.8/108 | - | - | 157/175 | 175/175 |
| | | | | | | | | | | | | | | 9.6/8.7 | - | 166/183 | 175/200 |
| | | | | | | | | | | | | | | - | 3.3/3.0 (2.4) | 160/178 | 175/200 |
| | | | | | | | | | | | | | | 9.6/8.7 | 3.3/3.0 (2.4) | 170/186 | 175/200 |
| DSH0903W | 208/230/3/60 | 2 | 12.2 | 120 | 2 | 0.33 | 2.0 | 1 | 3.5 | 10.9 | - | - | - | - | - | 42.3/42.3 | 50/50 |
| | | | | | | | | | | | - | - | - | 9.6/8.7 | - | 51.9/51.0 | 60/60 |
| | | | | | | | | | | | - | - | - | - | 3.3/3.0 (2.4) | 45.6/45.3 | 50/50 |
| | | | | | | | | | | | - | - | - | 9.6/8.7 | 3.3/3.0 (2.4) | 55.2/54.0 | 60/60 |
| | | | | | | | | | | | EH*D-3M15 | 11.3/15.0 | 31.3/36.1 | - | - | 81.4/87.4 | 90/90 |
| | | | | | | | | | | | | | | 9.6/8.7 | - | 91.0/96.1 | 100/100 |
| | | | | | | | | | | | | | | - | 3.3/3.0 (2.4) | 84.7/90.4 | 90/100 |
| | | | | | | | | | | | | | | 9.6/8.7 | 3.3/3.0 (2.4) | 94.3/99.1 | 100/100 |
| | | | | | | | | | | | EH*D-3M30 | 22.5/30.0 | 62.5/72.2 | - | - | 120/132 | 125/150 |
| | | | | | | | | | | | | | | 9.6/8.7 | - | 130/141 | 150/150 |
| | | | | | | | | | | | | | | - | 3.3/3.0 (2.4) | 124/135 | 125/150 |
| | | | | | | | | | | | | | | 9.6/8.7 | 3.3/3.0 (2.4) | 133/144 | 150/150 |
| | | | | | | | | | | | EH*D-3M45 | 33.8/45.0 | 93.8/108 | - | - | 160/178 | 175/200 |
| | | | | | | | | | | | | | | 9.6/8.7 | - | 169/186 | 175/200 |
| | | | | | | | | | | | | | | - | 3.3/3.0 (2.4) | 163/181 | 175/200 |
| | | | | | | | | | | | | | | 9.6/8.7 | 3.3/3.0 (2.4) | 172/189 | 175/200 |
| DSH0904D | 460/3/60 | 2 | 5.8 | 55.1 | 2 | 0.33 | 0.85 | 1 | 2.4 | 5.4 | - | - | - | - | - | 20.1 | 25 |
| | | | | | | | | | | | - | - | - | 4.3 | - | 24.4 | 30 |
| | | | | | | | | | | | - | - | - | - | 1.2 (1.0) | 21.3 | 25 |
| | | | | | | | | | | | - | - | - | 4.3 | 1.2 (1.0) | 25.6 | 30 |
| | | | | | | | | | | | EH*D-4M15 | 15.0 | 18.0 | - | - | 42.6 | 45 |
| | | | | | | | | | | | | | | 4.3 | - | 46.9 | 50 |
| | | | | | | | | | | | | | | - | 1.2 (1.0) | 43.8 | 45 |
| | | | | | | | | | | | | | | 4.3 | 1.2 (1.0) | 48.1 | 50 |
| | | | | | | | | | | | EH*D-4M30 | 30.0 | 36.1 | - | - | 65.2 | 70 |
| | | | | | | | | | | | | | | 4.3 | - | 69.5 | 70 |
| | | | | | | | | | | | | | | - | 1.2 (1.0) | 66.4 | 70 |
| | | | | | | | | | | | | | | 4.3 | 1.2 (1.0) | 70.7 | 80 |
| | | | | | | | | | | | EH*D-4M45 | 45.0 | 54.1 | - | - | 87.7 | 90 |
| | | | | | | | | | | | | | | 4.3 | - | 92.0 | 100 |
| | | | | | | | | | | | | | | - | 1.2 (1.0) | 88.9 | 90 |
| | | | | | | | | | | | | | | 4.3 | 1.2 (1.0) | 93.2 | 100 |

# Electrical Data

| Model Number | Electrical Rating | Compressor | | | Outdoor Fan Motor | | | Indoor Fan Motor | | | Optional Electric Heat | | | Optional Powered Convienience Outlet | Optional Power Exhaust | Power Supply | |
|---|---|---|---|---|---|---|---|---|---|---|---|---|---|---|---|---|---|
| | | QTY | RLA | LRA | QTY | HP | FLA | QTY | HP | FLA | PART # | KW* | FLA | FLA | FLA | MCA | MOP |
| DSH0904L | 460/3/60 | 2 | 5.8 | 55.1 | 2 | 0.33 | 0.85 | 1 | 2.4 | 5.4 | - | - | - | - | - | 20.1 | 25 |
| | | | | | | | | | | | - | - | - | 4.3 | - | 24.4 | 30 |
| | | | | | | | | | | | - | - | - | - | 1.2 (1.0) | 21.3 | 25 |
| | | | | | | | | | | | - | - | - | 4.3 | 1.2 (1.0) | 25.6 | 30 |
| | | | | | | | | | | | EH*D-4M15 | 15.0 | 18.0 | - | - | 42.6 | 45 |
| | | | | | | | | | | | | | | 4.3 | - | 46.9 | 50 |
| | | | | | | | | | | | | | | - | 1.2 (1.0) | 43.8 | 45 |
| | | | | | | | | | | | | | | 4.3 | 1.2 (1.0) | 48.1 | 50 |
| | | | | | | | | | | | EH*D-4M30 | 30.0 | 36.1 | - | - | 65.2 | 70 |
| | | | | | | | | | | | | | | 4.3 | - | 69.5 | 70 |
| | | | | | | | | | | | | | | - | 1.2 (1.0) | 66.4 | 70 |
| | | | | | | | | | | | | | | 4.3 | 1.2 (1.0) | 70.7 | 80 |
| | | | | | | | | | | | EH*D-4M45 | 45.0 | 54.1 | - | - | 87.7 | 90 |
| | | | | | | | | | | | | | | 4.3 | - | 92.0 | 100 |
| | | | | | | | | | | | | | | - | 1.2 (1.0) | 88.9 | 90 |
| | | | | | | | | | | | | | | 4.3 | 1.2 (1.0) | 93.2 | 100 |
| DSH0904W | 460/3/60 | 2 | 5.8 | 55.1 | 2 | 0.33 | 0.85 | 1 | 3.5 | 7.2 | - | - | - | - | - | 21.9 | 25 |
| | | | | | | | | | | | - | - | - | 4.3 | - | 26.2 | 30 |
| | | | | | | | | | | | - | - | - | - | 1.2 (1.0) | 23.1 | 30 |
| | | | | | | | | | | | - | - | - | 4.3 | 1.2 (1.0) | 27.4 | 30 |
| | | | | | | | | | | | EH*D-4M15 | 15.0 | 18.0 | - | - | 44.4 | 45 |
| | | | | | | | | | | | | | | 4.3 | - | 48.7 | 50 |
| | | | | | | | | | | | | | | - | 1.2 (1.0) | 45.6 | 50 |
| | | | | | | | | | | | | | | 4.3 | 1.2 (1.0) | 49.9 | 50 |
| | | | | | | | | | | | EH*D-4M30 | 30.0 | 36.1 | - | - | 67.0 | 70 |
| | | | | | | | | | | | | | | 4.3 | - | 71.3 | 80 |
| | | | | | | | | | | | | | | - | 1.2 (1.0) | 68.2 | 70 |
| | | | | | | | | | | | | | | 4.3 | 1.2 (1.0) | 72.5 | 80 |
| | | | | | | | | | | | EH*D-4M45 | 45.0 | 54.1 | - | - | 89.5 | 90 |
| | | | | | | | | | | | | | | 4.3 | - | 93.8 | 100 |
| | | | | | | | | | | | | | | - | 1.2 (1.0) | 90.7 | 100 |
| | | | | | | | | | | | | | | 4.3 | 1.2 (1.0) | 95.0 | 100 |
| DSH0907D | 575/3/60 | 2 | 5.8 | 41.0 | 2 | 0.33 | 0.67 | 1 | 2.4 | 4.0 | - | - | - | - | - | 18.3 | 20 |
| | | | | | | | | | | | - | - | - | 3.5 | - | 21.8 | 25 |
| | | | | | | | | | | | - | - | - | - | 1.3 | 19.6 | 25 |
| | | | | | | | | | | | - | - | - | 3.5 | 1.3 | 23.1 | 25 |
| | | | | | | | | | | | EH*D-7M15 | 15.0 | 14.4 | - | - | 36.3 | 40 |
| | | | | | | | | | | | | | | 3.5 | - | 39.8 | 40 |
| | | | | | | | | | | | | | | - | 1.3 | 37.6 | 40 |
| | | | | | | | | | | | | | | 3.5 | 1.3 | 41.1 | 45 |
| | | | | | | | | | | | EH*D-7M30 | 30.0 | 28.9 | - | - | 54.4 | 60 |
| | | | | | | | | | | | | | | 3.5 | - | 57.9 | 60 |
| | | | | | | | | | | | | | | - | 1.3 | 55.7 | 60 |
| | | | | | | | | | | | | | | 3.5 | 1.3 | 59.2 | 60 |
| | | | | | | | | | | | EH*D-7M45 | 45.0 | 43.3 | - | - | 72.4 | 80 |
| | | | | | | | | | | | | | | 3.5 | - | 75.9 | 80 |
| | | | | | | | | | | | | | | - | 1.3 | 73.7 | 80 |
| | | | | | | | | | | | | | | 3.5 | 1.3 | 77.2 | 80 |
| DSH0907L | 575/3/60 | 2 | 5.8 | 41.0 | 2 | 0.33 | 0.67 | 1 | 2.4 | 4.0 | - | - | - | - | - | 18.3 | 20 |
| | | | | | | | | | | | - | - | - | 3.5 | - | 21.8 | 25 |
| | | | | | | | | | | | - | - | - | - | 1.3 | 19.6 | 25 |
| | | | | | | | | | | | - | - | - | 3.5 | 1.3 | 23.1 | 25 |
| | | | | | | | | | | | EH*D-7M15 | 15.0 | 14.4 | - | - | 36.3 | 40 |
| | | | | | | | | | | | | | | 3.5 | - | 39.8 | 40 |
| | | | | | | | | | | | | | | - | 1.3 | 37.6 | 40 |
| | | | | | | | | | | | | | | 3.5 | 1.3 | 41.1 | 45 |
| | | | | | | | | | | | EH*D-7M30 | 30.0 | 28.9 | - | - | 54.4 | 60 |
| | | | | | | | | | | | | | | 3.5 | - | 57.9 | 60 |
| | | | | | | | | | | | | | | - | 1.3 | 55.7 | 60 |
| | | | | | | | | | | | | | | 3.5 | 1.3 | 59.2 | 60 |
| | | | | | | | | | | | EH*D-7M45 | 45.0 | 43.3 | - | - | 72.4 | 80 |
| | | | | | | | | | | | | | | 3.5 | - | 75.9 | 80 |
| | | | | | | | | | | | | | | - | 1.3 | 73.7 | 80 |
| | | | | | | | | | | | | | | 3.5 | 1.3 | 77.2 | 80 |

# Electrical Data

| Model Number | Electrical Rating | Compressor | | | Outdoor Fan Motor | | | Indoor Fan Motor | | | Optional Electric Heat | | | Optional Powered Convienience Outlet | Optional Power Exhaust | Power Supply | |
|---|---|---|---|---|---|---|---|---|---|---|---|---|---|---|---|---|---|
| | | QTY | RLA | LRA | QTY | HP | FLA | QTY | HP | FLA | PART # | KW* | FLA | FLA | FLA | MCA | MOP |
| DSH0907W | 575/3/60 | 2 | 5.8 | 41.0 | 2 | 0.33 | 0.67 | 1 | 3.5 | 5.0 | - | - | - | - | - | 19.3 | 25 |
| | | | | | | | | | | | - | - | - | 3.5 | - | 22.8 | 25 |
| | | | | | | | | | | | - | - | - | - | 1.3 | 20.6 | 25 |
| | | | | | | | | | | | - | - | - | 3.5 | 1.3 | 24.1 | 25 |
| | | | | | | | | | | | EH*D-7M15 | 15.0 | 14.4 | - | - | 37.3 | 40 |
| | | | | | | | | | | | | | | 3.5 | - | 40.8 | 45 |
| | | | | | | | | | | | | | | - | 1.3 | 38.6 | 40 |
| | | | | | | | | | | | | | | 3.5 | 1.3 | 42.1 | 45 |
| | | | | | | | | | | | EH*D-7M30 | 30.0 | 28.9 | - | - | 55.4 | 60 |
| | | | | | | | | | | | | | | 3.5 | - | 58.9 | 60 |
| | | | | | | | | | | | | | | - | 1.3 | 56.7 | 60 |
| | | | | | | | | | | | | | | 3.5 | 1.3 | 60.2 | 70 |
| | | | | | | | | | | | EH*D-7M45 | 45.0 | 43.3 | - | - | 73.4 | 80 |
| | | | | | | | | | | | | | | 3.5 | - | 76.9 | 80 |
| | | | | | | | | | | | | | | - | 1.3 | 74.7 | 80 |
| | | | | | | | | | | | | | | 3.5 | 1.3 | 78.2 | 80 |
| DSH1023D | 208/230/3/60 | 2 | 14.1 | 120 | 2 | 0.33 | 2.0 | 1 | 2.4 | 8.0 | - | - | - | - | - | 43.7/43.7 | 50/50 |
| | | | | | | | | | | | - | - | - | 9.6/8.7 | - | 53.3/52.4 | 60/60 |
| | | | | | | | | | | | - | - | - | - | 3.3/3.0 (2.4) | 47.0/46.7 | 60/60 |
| | | | | | | | | | | | - | - | - | 9.6/8.7 | 3.3/3.0 (2.4) | 56.6/55.4 | 60/60 |
| | | | | | | | | | | | EH*D-3M15 | 11.3/15.0 | 31.3/36.1 | - | - | 82.8/88.8 | 90/90 |
| | | | | | | | | | | | | | | 9.6/8.7 | - | 92.4/97.5 | 100/100 |
| | | | | | | | | | | | | | | - | 3.3/3.0 (2.4) | 86.1/91.8 | 90/100 |
| | | | | | | | | | | | | | | 9.6/8.7 | 3.3/3.0 (2.4) | 95.7/100 | 100/110 |
| | | | | | | | | | | | EH*D-3M30 | 22.5/30.0 | 62.5/72.2 | - | - | 122/134 | 125/150 |
| | | | | | | | | | | | | | | 9.6/8.7 | - | 131/143 | 150/150 |
| | | | | | | | | | | | | | | - | 3.3/3.0 (2.4) | 125/137 | 150/150 |
| | | | | | | | | | | | | | | 9.6/8.7 | 3.3/3.0 (2.4) | 135/146 | 150/150 |
| | | | | | | | | | | | EH*D-3M45 | 33.8/45.0 | 93.8/108 | - | - | 161/179 | 175/200 |
| | | | | | | | | | | | | | | 9.6/8.7 | - | 171/188 | 175/200 |
| | | | | | | | | | | | | | | - | 3.3/3.0 (2.4) | 164/182 | 175/200 |
| | | | | | | | | | | | | | | 9.6/8.7 | 3.3/3.0 (2.4) | 174/191 | 175/200 |
| DSH1023L | 208/230/3/60 | 2 | 14.1 | 120 | 2 | 0.33 | 2.0 | 1 | 2.4 | 8.0 | - | - | - | - | - | 43.7/43.7 | 50/50 |
| | | | | | | | | | | | - | - | - | 9.6/8.7 | - | 53.3/52.4 | 60/60 |
| | | | | | | | | | | | - | - | - | - | 3.3/3.0 (2.4) | 47.0/46.7 | 60/60 |
| | | | | | | | | | | | - | - | - | 9.6/8.7 | 3.3/3.0 (2.4) | 56.6/55.4 | 60/60 |
| | | | | | | | | | | | EH*D-3M15 | 11.3/15.0 | 31.3/36.1 | - | - | 82.8/88.8 | 90/90 |
| | | | | | | | | | | | | | | 9.6/8.7 | - | 92.4/97.5 | 100/100 |
| | | | | | | | | | | | | | | - | 3.3/3.0 (2.4) | 86.1/91.8 | 90/100 |
| | | | | | | | | | | | | | | 9.6/8.7 | 3.3/3.0 (2.4) | 95.7/100 | 100/110 |
| | | | | | | | | | | | EH*D-3M30 | 22.5/30.0 | 62.5/72.2 | - | - | 122/134 | 125/150 |
| | | | | | | | | | | | | | | 9.6/8.7 | - | 131/143 | 150/150 |
| | | | | | | | | | | | | | | - | 3.3/3.0 (2.4) | 125/137 | 150/150 |
| | | | | | | | | | | | | | | 9.6/8.7 | 3.3/3.0 (2.4) | 135/146 | 150/150 |
| | | | | | | | | | | | EH*D-3M45 | 33.8/45.0 | 93.8/108 | - | - | 161/179 | 175/200 |
| | | | | | | | | | | | | | | 9.6/8.7 | - | 171/188 | 175/200 |
| | | | | | | | | | | | | | | - | 3.3/3.0 (2.4) | 164/182 | 175/200 |
| | | | | | | | | | | | | | | 9.6/8.7 | 3.3/3.0 (2.4) | 174/191 | 175/200 |
| DSH1023W | 208/230/3/60 | 2 | 14.1 | 120 | 2 | 0.33 | 2.0 | 1 | 3.5 | 10.9 | - | - | - | - | - | 46.6/46.6 | 60/60 |
| | | | | | | | | | | | - | - | - | 9.6/8.7 | - | 56.2/55.3 | 70/60 |
| | | | | | | | | | | | - | - | - | - | 3.3/3.0 (2.4) | 49.9/49.6 | 60/60 |
| | | | | | | | | | | | - | - | - | 9.6/8.7 | 3.3/3.0 (2.4) | 59.5/58.3 | 70/70 |
| | | | | | | | | | | | EH*D-3M15 | 11.3/15.0 | 31.3/36.1 | - | - | 85.7/91.7 | 90/100 |
| | | | | | | | | | | | | | | 9.6/8.7 | - | 95.3/100 | 100/110 |
| | | | | | | | | | | | | | | - | 3.3/3.0 (2.4) | 89.0/94.7 | 90/100 |
| | | | | | | | | | | | | | | 9.6/8.7 | 3.3/3.0 (2.4) | 98.6/103 | 100/110 |
| | | | | | | | | | | | EH*D-3M30 | 22.5/30.0 | 62.5/72.2 | - | - | 125/137 | 125/150 |
| | | | | | | | | | | | | | | 9.6/8.7 | - | 134/145 | 150/150 |
| | | | | | | | | | | | | | | - | 3.3/3.0 (2.4) | 128/140 | 150/150 |
| | | | | | | | | | | | | | | 9.6/8.7 | 3.3/3.0 (2.4) | 138/148 | 150/150 |
| | | | | | | | | | | | EH*D-3M45 | 33.8/45.0 | 93.8/108 | - | - | 164/182 | 175/200 |
| | | | | | | | | | | | | | | 9.6/8.7 | - | 173/191 | 175/200 |
| | | | | | | | | | | | | | | - | 3.3/3.0 (2.4) | 167/185 | 175/200 |
| | | | | | | | | | | | | | | 9.6/8.7 | 3.3/3.0 (2.4) | 177/194 | 200/200 |

# Electrical Data

| Model Number | Electrical Rating | Compressor | | | Outdoor Fan Motor | | | Indoor Fan Motor | | | Optional Electric Heat | | | Optional Powered Convienience Outlet | Optional Power Exhaust | Power Supply | |
|---|---|---|---|---|---|---|---|---|---|---|---|---|---|---|---|---|---|
| | | QTY | RLA | LRA | QTY | HP | FLA | QTY | HP | FLA | PART # | KW* | FLA | FLA | FLA | MCA | MOP |
| DSH1024D | 460/3/60 | 2 | 6.4 | 55.1 | 2 | 0.33 | 0.85 | 1 | 2.4 | 5.4 | - | - | - | - | - | 21.5 | 25 |
| | | | | | | | | | | | - | - | - | 4.3 | - | 25.8 | 30 |
| | | | | | | | | | | | - | - | - | - | 1.2 (1.0) | 22.7 | 25 |
| | | | | | | | | | | | - | - | - | 4.3 | 1.2 (1.0) | 27.0 | 30 |
| | | | | | | | | | | | EH*D-4M15 | 15.0 | 18.0 | - | - | 44.1 | 45 |
| | | | | | | | | | | | | | | 4.3 | - | 48.4 | 50 |
| | | | | | | | | | | | | | | - | 1.2 (1.0) | 45.3 | 50 |
| | | | | | | | | | | | | | | 4.3 | 1.2 (1.0) | 49.6 | 50 |
| | | | | | | | | | | | EH*D-4M30 | 30.0 | 36.1 | - | - | 66.6 | 70 |
| | | | | | | | | | | | | | | 4.3 | - | 70.9 | 80 |
| | | | | | | | | | | | | | | - | 1.2 (1.0) | 67.8 | 70 |
| | | | | | | | | | | | | | | 4.3 | 1.2 (1.0) | 72.1 | 80 |
| | | | | | | | | | | | EH*D-4M45 | 45.0 | 54.1 | - | - | 89.2 | 90 |
| | | | | | | | | | | | | | | 4.3 | - | 93.5 | 100 |
| | | | | | | | | | | | | | | - | 1.2 (1.0) | 90.4 | 100 |
| | | | | | | | | | | | | | | 4.3 | 1.2 (1.0) | 94.7 | 100 |
| DSH1024L | 460/3/60 | 2 | 6.4 | 55.1 | 2 | 0.33 | 0.85 | 1 | 2.4 | 5.4 | - | - | - | - | - | 21.5 | 25 |
| | | | | | | | | | | | - | - | - | 4.3 | - | 25.8 | 30 |
| | | | | | | | | | | | - | - | - | - | 1.2 (1.0) | 22.7 | 25 |
| | | | | | | | | | | | - | - | - | 4.3 | 1.2 (1.0) | 27.0 | 30 |
| | | | | | | | | | | | EH*D-4M15 | 15.0 | 18.0 | - | - | 44.1 | 45 |
| | | | | | | | | | | | | | | 4.3 | - | 48.4 | 50 |
| | | | | | | | | | | | | | | - | 1.2 (1.0) | 45.3 | 50 |
| | | | | | | | | | | | | | | 4.3 | 1.2 (1.0) | 49.6 | 50 |
| | | | | | | | | | | | EH*D-4M30 | 30.0 | 36.1 | - | - | 66.6 | 70 |
| | | | | | | | | | | | | | | 4.3 | - | 70.9 | 80 |
| | | | | | | | | | | | | | | - | 1.2 (1.0) | 67.8 | 70 |
| | | | | | | | | | | | | | | 4.3 | 1.2 (1.0) | 72.1 | 80 |
| | | | | | | | | | | | EH*D-4M45 | 45.0 | 54.1 | - | - | 89.2 | 90 |
| | | | | | | | | | | | | | | 4.3 | - | 93.5 | 100 |
| | | | | | | | | | | | | | | - | 1.2 (1.0) | 90.4 | 100 |
| | | | | | | | | | | | | | | 4.3 | 1.2 (1.0) | 94.7 | 100 |
| DSH1024W | 460/3/60 | 2 | 6.4 | 55.1 | 2 | 0.33 | 0.85 | 1 | 3.5 | 7.2 | - | - | - | - | - | 23.3 | 30 |
| | | | | | | | | | | | - | - | - | 4.3 | - | 27.6 | 35 |
| | | | | | | | | | | | - | - | - | - | 1.2 (1.0) | 24.5 | 30 |
| | | | | | | | | | | | - | - | - | 4.3 | 1.2 (1.0) | 28.8 | 35 |
| | | | | | | | | | | | EH*D-4M15 | 15.0 | 18.0 | - | - | 45.9 | 50 |
| | | | | | | | | | | | | | | 4.3 | - | 50.2 | 60 |
| | | | | | | | | | | | | | | - | 1.2 (1.0) | 47.1 | 50 |
| | | | | | | | | | | | | | | 4.3 | 1.2 (1.0) | 51.4 | 60 |
| | | | | | | | | | | | EH*D-4M30 | 30.0 | 36.1 | - | - | 68.4 | 70 |
| | | | | | | | | | | | | | | 4.3 | - | 72.7 | 80 |
| | | | | | | | | | | | | | | - | 1.2 (1.0) | 69.6 | 70 |
| | | | | | | | | | | | | | | 4.3 | 1.2 (1.0) | 73.9 | 80 |
| | | | | | | | | | | | EH*D-4M45 | 45.0 | 54.1 | - | - | 91.0 | 100 |
| | | | | | | | | | | | | | | 4.3 | - | 95.3 | 100 |
| | | | | | | | | | | | | | | - | 1.2 (1.0) | 92.2 | 100 |
| | | | | | | | | | | | | | | 4.3 | 1.2 (1.0) | 96.5 | 100 |
| DSH1027D | 575/3/60 | 2 | 5.1 | 41.0 | 2 | 0.33 | 0.67 | 1 | 2.4 | 4.0 | - | - | - | - | - | 16.9 | 20 |
| | | | | | | | | | | | - | - | - | 3.5 | - | 20.4 | 25 |
| | | | | | | | | | | | - | - | - | - | 1.3 | 18.2 | 20 |
| | | | | | | | | | | | - | - | - | 3.5 | 1.3 | 21.7 | 25 |
| | | | | | | | | | | | EH*D-7M15 | 15.0 | 14.4 | - | - | 34.9 | 35 |
| | | | | | | | | | | | | | | 3.5 | - | 38.4 | 40 |
| | | | | | | | | | | | | | | - | 1.3 | 36.2 | 40 |
| | | | | | | | | | | | | | | 3.5 | 1.3 | 39.7 | 40 |
| | | | | | | | | | | | EH*D-7M30 | 30.0 | 28.9 | - | - | 52.9 | 60 |
| | | | | | | | | | | | | | | 3.5 | - | 56.4 | 60 |
| | | | | | | | | | | | | | | - | 1.3 | 54.2 | 60 |
| | | | | | | | | | | | | | | 3.5 | 1.3 | 57.7 | 60 |
| | | | | | | | | | | | EH*D-7M45 | 45.0 | 43.3 | - | - | 71.0 | 80 |
| | | | | | | | | | | | | | | 3.5 | - | 74.5 | 80 |
| | | | | | | | | | | | | | | - | 1.3 | 72.3 | 80 |
| | | | | | | | | | | | | | | 3.5 | 1.3 | 75.8 | 80 |

# Electrical Data

| Model Number | Electrical Rating | Compressor | | | Outdoor Fan Motor | | | Indoor Fan Motor | | | Optional Electric Heat | | | Optional Powered Convienience Outlet | Optional Power Exhaust | Power Supply | |
|---|---|---|---|---|---|---|---|---|---|---|---|---|---|---|---|---|---|
| | | QTY | RLA | LRA | QTY | HP | FLA | QTY | HP | FLA | PART # | KW* | FLA | FLA | FLA | MCA | MOP |
| DSH1027L | 575/3/60 | 2 | 5.1 | 41.0 | 2 | 0.33 | 0.67 | 1 | 2.4 | 4.0 | - | - | - | - | - | 16.9 | 20 |
| | | | | | | | | | | | - | - | - | 3.5 | - | 20.4 | 25 |
| | | | | | | | | | | | - | - | - | - | 1.3 | 18.2 | 20 |
| | | | | | | | | | | | - | - | - | 3.5 | 1.3 | 21.7 | 25 |
| | | | | | | | | | | | EH*D-7M15 | 15.0 | 14.4 | - | - | 34.9 | 35 |
| | | | | | | | | | | | | | | 3.5 | - | 38.4 | 40 |
| | | | | | | | | | | | | | | - | 1.3 | 36.2 | 40 |
| | | | | | | | | | | | | | | 3.5 | 1.3 | 39.7 | 40 |
| | | | | | | | | | | | EH*D-7M30 | 30.0 | 28.9 | - | - | 52.9 | 60 |
| | | | | | | | | | | | | | | 3.5 | - | 56.4 | 60 |
| | | | | | | | | | | | | | | - | 1.3 | 54.2 | 60 |
| | | | | | | | | | | | | | | 3.5 | 1.3 | 57.7 | 60 |
| | | | | | | | | | | | EH*D-7M45 | 45.0 | 43.3 | - | - | 71.0 | 80 |
| | | | | | | | | | | | | | | 3.5 | - | 74.5 | 80 |
| | | | | | | | | | | | | | | - | 1.3 | 72.3 | 80 |
| | | | | | | | | | | | | | | 3.5 | 1.3 | 75.8 | 80 |
| DSH1027W | 575/3/60 | 2 | 5.1 | 41.0 | 2 | 0.33 | 0.67 | 1 | 3.5 | 5.0 | - | - | - | - | - | 17.9 | 20 |
| | | | | | | | | | | | - | - | - | 3.5 | - | 21.4 | 25 |
| | | | | | | | | | | | - | - | - | - | 1.3 | 19.2 | 20 |
| | | | | | | | | | | | - | - | - | 3.5 | 1.3 | 22.7 | 25 |
| | | | | | | | | | | | EH*D-7M15 | 15.0 | 14.4 | - | - | 35.9 | 40 |
| | | | | | | | | | | | | | | 3.5 | - | 39.4 | 40 |
| | | | | | | | | | | | | | | - | 1.3 | 37.2 | 40 |
| | | | | | | | | | | | | | | 3.5 | 1.3 | 40.7 | 45 |
| | | | | | | | | | | | EH*D-7M30 | 30.0 | 28.9 | - | - | 53.9 | 60 |
| | | | | | | | | | | | | | | 3.5 | - | 57.4 | 60 |
| | | | | | | | | | | | | | | - | 1.3 | 55.2 | 60 |
| | | | | | | | | | | | | | | 3.5 | 1.3 | 58.7 | 60 |
| | | | | | | | | | | | EH*D-7M45 | 45.0 | 43.3 | - | - | 72.0 | 80 |
| | | | | | | | | | | | | | | 3.5 | - | 75.5 | 80 |
| | | | | | | | | | | | | | | - | 1.3 | 73.3 | 80 |
| | | | | | | | | | | | | | | 3.5 | 1.3 | 76.8 | 80 |
| DSH1203D | 208/230/3/60 | 2 | 17.3 | 155 | 2 | 0.5 | 2.7 | 1 | 3.5 | 10.9 | - | - | - | - | - | 55.2/55.2 | 70/70 |
| | | | | | | | | | | | - | - | - | 9.6/8.7 | - | 64.8/63.9 | 80/80 |
| | | | | | | | | | | | - | - | - | - | 3.3/3.0 (2.4) | 58.5/58.2 | 70/70 |
| | | | | | | | | | | | - | - | - | 9.6/8.7 | 3.3/3.0 (2.4) | 68.1/66.9 | 80/80 |
| | | | | | | | | | | | EH*D-3M15 | 11.3/15.0 | 31.3/36.1 | - | - | 94.3/100 | 100/110 |
| | | | | | | | | | | | | | | 9.6/8.7 | - | 104/109 | 110/110 |
| | | | | | | | | | | | | | | - | 3.3/3.0 (2.4) | 97.6/103 | 100/110 |
| | | | | | | | | | | | | | | 9.6/8.7 | 3.3/3.0 (2.4) | 107/112 | 110/125 |
| | | | | | | | | | | | EH*D-3M30 | 22.5/30.0 | 62.5/72.2 | - | - | 133/145 | 150/150 |
| | | | | | | | | | | | | | | 9.6/8.7 | - | 143/154 | 150/175 |
| | | | | | | | | | | | | | | - | 3.3/3.0 (2.4) | 137/148 | 150/150 |
| | | | | | | | | | | | | | | 9.6/8.7 | 3.3/3.0 (2.4) | 146/157 | 150/175 |
| | | | | | | | | | | | EH*D-3M45 | 33.8/45.0 | 93.8/108 | - | - | 172/190 | 175/200 |
| | | | | | | | | | | | | | | 9.6/8.7 | - | 182/199 | 200/200 |
| | | | | | | | | | | | | | | - | 3.3/3.0 (2.4) | 176/193 | 200/200 |
| | | | | | | | | | | | | | | 9.6/8.7 | 3.3/3.0 (2.4) | 185/202 | 200/225 |
| DSH1203L | 208/230/3/60 | 2 | 17.3 | 155 | 2 | 0.5 | 2.7 | 1 | 3.5 | 10.9 | - | - | - | - | - | 55.2/55.2 | 70/70 |
| | | | | | | | | | | | - | - | - | 9.6/8.7 | - | 64.8/63.9 | 80/80 |
| | | | | | | | | | | | - | - | - | - | 3.3/3.0 (2.4) | 58.5/58.2 | 70/70 |
| | | | | | | | | | | | - | - | - | 9.6/8.7 | 3.3/3.0 (2.4) | 68.1/66.9 | 80/80 |
| | | | | | | | | | | | EH*D-3M15 | 11.3/15.0 | 31.3/36.1 | - | - | 94.3/100 | 100/110 |
| | | | | | | | | | | | | | | 9.6/8.7 | - | 104/109 | 110/110 |
| | | | | | | | | | | | | | | - | 3.3/3.0 (2.4) | 97.6/103 | 100/110 |
| | | | | | | | | | | | | | | 9.6/8.7 | 3.3/3.0 (2.4) | 107/112 | 110/125 |
| | | | | | | | | | | | EH*D-3M30 | 22.5/30.0 | 62.5/72.2 | - | - | 133/145 | 150/150 |
| | | | | | | | | | | | | | | 9.6/8.7 | - | 143/154 | 150/175 |
| | | | | | | | | | | | | | | - | 3.3/3.0 (2.4) | 137/148 | 150/150 |
| | | | | | | | | | | | | | | 9.6/8.7 | 3.3/3.0 (2.4) | 146/157 | 150/175 |
| | | | | | | | | | | | EH*D-3M45 | 33.8/45.0 | 93.8/108 | - | - | 172/190 | 175/200 |
| | | | | | | | | | | | | | | 9.6/8.7 | - | 182/199 | 200/200 |
| | | | | | | | | | | | | | | - | 3.3/3.0 (2.4) | 176/193 | 200/200 |
| | | | | | | | | | | | | | | 9.6/8.7 | 3.3/3.0 (2.4) | 185/202 | 200/225 |

# Electrical Data

| Model Number | Electrical Rating | Compressor | | | Outdoor Fan Motor | | | Indoor Fan Motor | | | Optional Electric Heat | | | Optional Powered Convienience Outlet | Optional Power Exhaust | Power Supply | |
|---|---|---|---|---|---|---|---|---|---|---|---|---|---|---|---|---|---|
| | | QTY | RLA | LRA | QTY | HP | FLA | QTY | HP | FLA | PART # | KW* | FLA | FLA | FLA | MCA | MOP |
| DSH1203W | 208/230/3/60 | 2 | 17.3 | 155 | 2 | 0.5 | 2.7 | 1 | 5.0 | 14.5 | - | - | - | - | - | 58.8/58.8 | 70/70 |
| | | | | | | | | | | | - | - | - | 9.6/8.7 | - | 68.4/67.5 | 80/80 |
| | | | | | | | | | | | - | - | - | - | 3.3/3.0 (2.4) | 62.1/61.8 | 70/70 |
| | | | | | | | | | | | - | - | - | 9.6/8.7 | 3.3/3.0 (2.4) | 71.7/70.5 | 80/80 |
| | | | | | | | | | | | EH*D-3M15 | 11.3/15.0 | 31.3/36.1 | - | - | 97.9/104 | 100/110 |
| | | | | | | | | | | | | | | 9.6/8.7 | - | 107/113 | 110/125 |
| | | | | | | | | | | | | | | - | 3.3/3.0 (2.4) | 101/107 | 110/110 |
| | | | | | | | | | | | | | | 9.6/8.7 | 3.3/3.0 (2.4) | 111/116 | 125/125 |
| | | | | | | | | | | | EH*D-3M30 | 22.5/30.0 | 62.5/72.2 | - | - | 137/149 | 150/150 |
| | | | | | | | | | | | | | | 9.6/8.7 | - | 147/158 | 150/175 |
| | | | | | | | | | | | | | | - | 3.3/3.0 (2.4) | 140/152 | 150/175 |
| | | | | | | | | | | | | | | 9.6/8.7 | 3.3/3.0 (2.4) | 150/161 | 150/175 |
| | | | | | | | | | | | EH*D-3M45 | 33.8/45.0 | 93.8/108 | - | - | 176/194 | 200/200 |
| | | | | | | | | | | | | | | 9.6/8.7 | - | 186/203 | 200/225 |
| | | | | | | | | | | | | | | - | 3.3/3.0 (2.4) | 179/197 | 200/200 |
| | | | | | | | | | | | | | | 9.6/8.7 | 3.3/3.0 (2.4) | 189/206 | 200/225 |
| DSH1204D | 460/3/60 | 2 | 7.7 | 58.1 | 2 | 0.5 | 1.4 | 1 | 3.5 | 7.2 | - | - | - | - | - | 27.3 | 30 |
| | | | | | | | | | | | - | - | - | 4.3 | - | 31.6 | 35 |
| | | | | | | | | | | | - | - | - | - | 1.2 (1.0) | 28.5 | 35 |
| | | | | | | | | | | | - | - | - | 4.3 | 1.2 (1.0) | 32.8 | 40 |
| | | | | | | | | | | | EH*D-4M15 | 15.0 | 18.0 | - | - | 49.8 | 50 |
| | | | | | | | | | | | | | | 4.3 | - | 54.1 | 60 |
| | | | | | | | | | | | | | | - | 1.2 (1.0) | 51.0 | 60 |
| | | | | | | | | | | | | | | 4.3 | 1.2 (1.0) | 55.3 | 60 |
| | | | | | | | | | | | EH*D-4M30 | 30.0 | 36.1 | - | - | 72.4 | 80 |
| | | | | | | | | | | | | | | 4.3 | - | 76.7 | 80 |
| | | | | | | | | | | | | | | - | 1.2 (1.0) | 73.6 | 80 |
| | | | | | | | | | | | | | | 4.3 | 1.2 (1.0) | 77.9 | 80 |
| | | | | | | | | | | | EH*D-4M45 | 45.0 | 54.1 | - | - | 94.9 | 100 |
| | | | | | | | | | | | | | | 4.3 | - | 99.2 | 100 |
| | | | | | | | | | | | | | | - | 1.2 (1.0) | 96.1 | 100 |
| | | | | | | | | | | | | | | 4.3 | 1.2 (1.0) | 100 | 110 |
| DSH1204L | 460/3/60 | 2 | 7.7 | 58.1 | 2 | 0.5 | 1.4 | 1 | 3.5 | 7.2 | - | - | - | - | - | 27.3 | 30 |
| | | | | | | | | | | | - | - | - | 4.3 | - | 31.6 | 35 |
| | | | | | | | | | | | - | - | - | - | 1.2 (1.0) | 28.5 | 35 |
| | | | | | | | | | | | - | - | - | 4.3 | 1.2 (1.0) | 32.8 | 40 |
| | | | | | | | | | | | EH*D-4M15 | 15.0 | 18.0 | - | - | 49.8 | 50 |
| | | | | | | | | | | | | | | 4.3 | - | 54.1 | 60 |
| | | | | | | | | | | | | | | - | 1.2 (1.0) | 51.0 | 60 |
| | | | | | | | | | | | | | | 4.3 | 1.2 (1.0) | 55.3 | 60 |
| | | | | | | | | | | | EH*D-4M30 | 30.0 | 36.1 | - | - | 72.4 | 80 |
| | | | | | | | | | | | | | | 4.3 | - | 76.7 | 80 |
| | | | | | | | | | | | | | | - | 1.2 (1.0) | 73.6 | 80 |
| | | | | | | | | | | | | | | 4.3 | 1.2 (1.0) | 77.9 | 80 |
| | | | | | | | | | | | EH*D-4M45 | 45.0 | 54.1 | - | - | 94.9 | 100 |
| | | | | | | | | | | | | | | 4.3 | - | 99.2 | 100 |
| | | | | | | | | | | | | | | - | 1.2 (1.0) | 96.1 | 100 |
| | | | | | | | | | | | | | | 4.3 | 1.2 (1.0) | 100 | 110 |
| DSH1204W | 460/3/60 | 2 | 7.7 | 58.1 | 2 | 0.5 | 1.4 | 1 | 5.0 | 10.6 | - | - | - | - | - | 30.7 | 40 |
| | | | | | | | | | | | - | - | - | 4.3 | - | 35.0 | 45 |
| | | | | | | | | | | | - | - | - | - | 1.2 (1.0) | 31.9 | 40 |
| | | | | | | | | | | | - | - | - | 4.3 | 1.2 (1.0) | 36.2 | 45 |
| | | | | | | | | | | | EH*D-4M15 | 15.0 | 18.0 | - | - | 53.2 | 60 |
| | | | | | | | | | | | | | | 4.3 | - | 57.5 | 60 |
| | | | | | | | | | | | | | | - | 1.2 (1.0) | 54.4 | 60 |
| | | | | | | | | | | | | | | 4.3 | 1.2 (1.0) | 58.7 | 60 |
| | | | | | | | | | | | EH*D-4M30 | 30.0 | 36.1 | - | - | 75.8 | 80 |
| | | | | | | | | | | | | | | 4.3 | - | 80.1 | 90 |
| | | | | | | | | | | | | | | - | 1.2 (1.0) | 77.0 | 80 |
| | | | | | | | | | | | | | | 4.3 | 1.2 (1.0) | 81.3 | 90 |
| | | | | | | | | | | | EH*D-4M45 | 45.0 | 54.1 | - | - | 98.3 | 100 |
| | | | | | | | | | | | | | | 4.3 | - | 103 | 110 |
| | | | | | | | | | | | | | | - | 1.2 (1.0) | 99.5 | 100 |
| | | | | | | | | | | | | | | 4.3 | 1.2 (1.0) | 104 | 110 |

# *Electrical Data*

| Model Number | Electrical Rating | Compressor | | | Outdoor Fan Motor | | | Indoor Fan Motor | | | Optional Electric Heat | | | Optional Powered Convienience Outlet | Optional Power Exhaust | Power Supply | |
|---|---|---|---|---|---|---|---|---|---|---|---|---|---|---|---|---|---|
| | | QTY | RLA | LRA | QTY | HP | FLA | QTY | HP | FLA | PART # | KW* | FLA | FLA | FLA | MCA | MOP |
| DSH1207D | 575/3/60 | 2 | 7.0 | 47.8 | 2 | 0.5 | 1.0 | 1 | 3.5 | 5.0 | - | - | - | - | - | 22.8 | 25 |
| | | | | | | | | | | | - | - | - | 3.5 | - | 26.3 | 30 |
| | | | | | | | | | | | - | - | - | - | 1.3 | 24.1 | 30 |
| | | | | | | | | | | | - | - | - | 3.5 | 1.3 | 27.6 | 30 |
| | | | | | | | | | | | EH*D-7M15 | 15.0 | 14.4 | - | - | 40.9 | 45 |
| | | | | | | | | | | | | | | 3.5 | - | 44.4 | 45 |
| | | | | | | | | | | | | | | - | 1.3 | 42.2 | 45 |
| | | | | | | | | | | | | | | 3.5 | 1.3 | 45.7 | 50 |
| | | | | | | | | | | | EH*D-7M30 | 30.0 | 28.9 | - | - | 58.9 | 60 |
| | | | | | | | | | | | | | | 3.5 | - | 62.4 | 70 |
| | | | | | | | | | | | | | | - | 1.3 | 60.2 | 70 |
| | | | | | | | | | | | | | | 3.5 | 1.3 | 63.7 | 70 |
| | | | | | | | | | | | EH*D-7M45 | 45.0 | 43.3 | - | - | 77.0 | 80 |
| | | | | | | | | | | | | | | 3.5 | - | 80.5 | 90 |
| | | | | | | | | | | | | | | - | 1.3 | 78.3 | 80 |
| | | | | | | | | | | | | | | 3.5 | 1.3 | 81.8 | 90 |
| DSH1207L | 575/3/60 | 2 | 7.0 | 47.8 | 2 | 0.5 | 1.0 | 1 | 3.5 | 5.0 | - | - | - | - | - | 22.8 | 25 |
| | | | | | | | | | | | - | - | - | 3.5 | - | 26.3 | 30 |
| | | | | | | | | | | | - | - | - | - | 1.3 | 24.1 | 30 |
| | | | | | | | | | | | - | - | - | 3.5 | 1.3 | 27.6 | 30 |
| | | | | | | | | | | | EH*D-7M15 | 15.0 | 14.4 | - | - | 40.9 | 45 |
| | | | | | | | | | | | | | | 3.5 | - | 44.4 | 45 |
| | | | | | | | | | | | | | | - | 1.3 | 42.2 | 45 |
| | | | | | | | | | | | | | | 3.5 | 1.3 | 45.7 | 50 |
| | | | | | | | | | | | EH*D-7M30 | 30.0 | 28.9 | - | - | 58.9 | 60 |
| | | | | | | | | | | | | | | 3.5 | - | 62.4 | 70 |
| | | | | | | | | | | | | | | - | 1.3 | 60.2 | 70 |
| | | | | | | | | | | | | | | 3.5 | 1.3 | 63.7 | 70 |
| | | | | | | | | | | | EH*D-7M45 | 45.0 | 43.3 | - | - | 77.0 | 80 |
| | | | | | | | | | | | | | | 3.5 | - | 80.5 | 90 |
| | | | | | | | | | | | | | | - | 1.3 | 78.3 | 80 |
| | | | | | | | | | | | | | | 3.5 | 1.3 | 81.8 | 90 |
| DSH1207W | 575/3/60 | 2 | 7.0 | 47.8 | 2 | 0.5 | 1.0 | 1 | 5.0 | 7.2 | - | - | - | - | - | 25.0 | 30 |
| | | | | | | | | | | | - | - | - | 3.5 | - | 28.5 | 35 |
| | | | | | | | | | | | - | - | - | - | 1.3 | 26.3 | 30 |
| | | | | | | | | | | | - | - | - | 3.5 | 1.3 | 29.8 | 35 |
| | | | | | | | | | | | EH*D-7M15 | 15.0 | 14.4 | - | - | 43.1 | 45 |
| | | | | | | | | | | | | | | 3.5 | - | 46.6 | 50 |
| | | | | | | | | | | | | | | - | 1.3 | 44.4 | 45 |
| | | | | | | | | | | | | | | 3.5 | 1.3 | 47.9 | 50 |
| | | | | | | | | | | | EH*D-7M30 | 30.0 | 28.9 | - | - | 61.1 | 70 |
| | | | | | | | | | | | | | | 3.5 | - | 64.6 | 70 |
| | | | | | | | | | | | | | | - | 1.3 | 62.4 | 70 |
| | | | | | | | | | | | | | | 3.5 | 1.3 | 65.9 | 70 |
| | | | | | | | | | | | EH*D-7M45 | 45.0 | 43.3 | - | - | 79.2 | 80 |
| | | | | | | | | | | | | | | 3.5 | - | 82.7 | 90 |
| | | | | | | | | | | | | | | - | 1.3 | 80.5 | 90 |
| | | | | | | | | | | | | | | 3.5 | 1.3 | 84.0 | 90 |

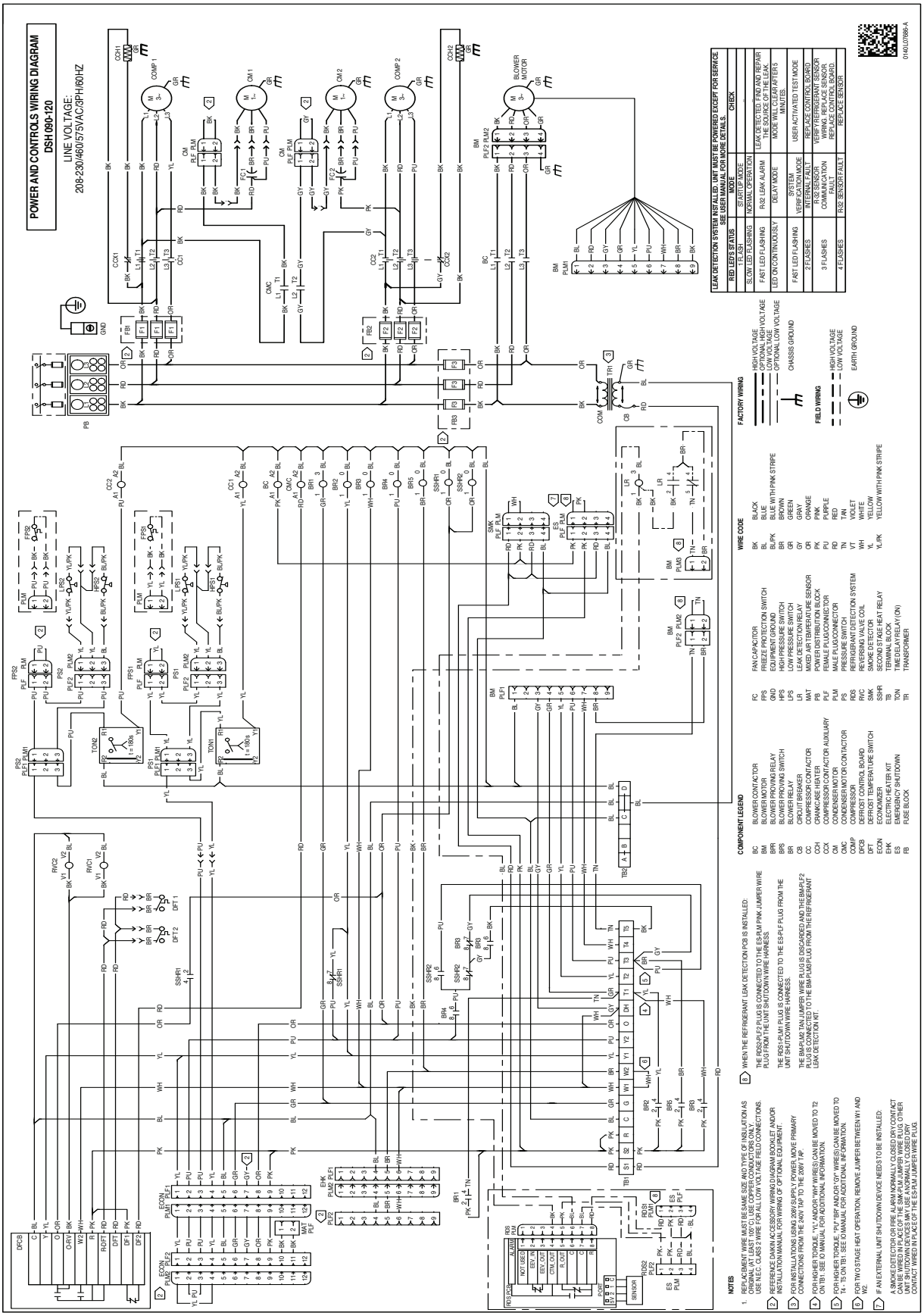


Wiring is subject to change. Always refer to the wiring diagram on the unit for the most up-to-date wiring.

**WARNING**

*High Voltage:* Disconnect all power before servicing or installing this unit. Multiple power sources may be present. Failure to do so may cause property damage, personal injury, or death.

# Electrical Connections

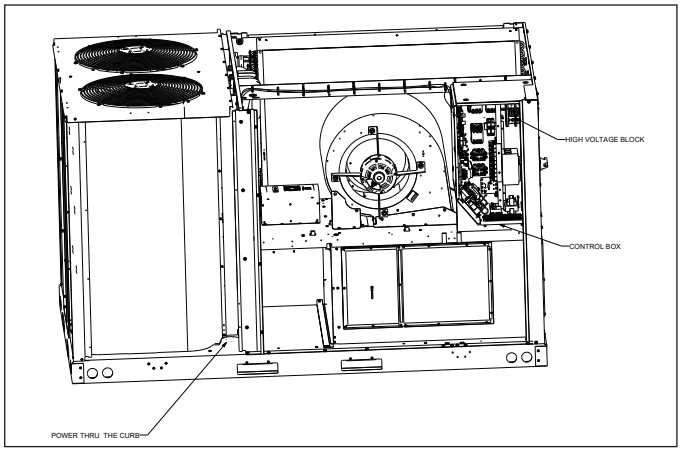


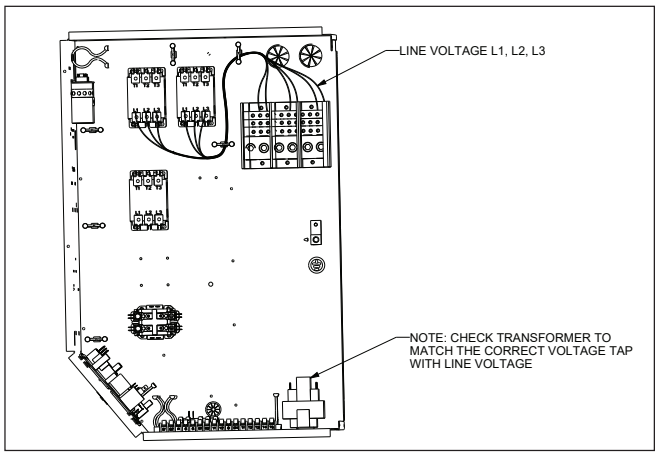


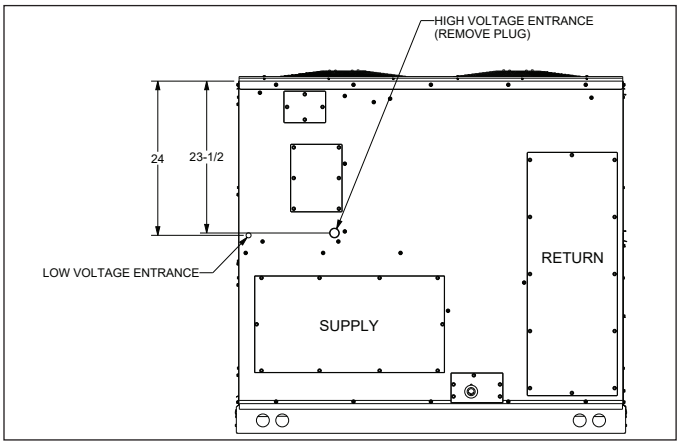


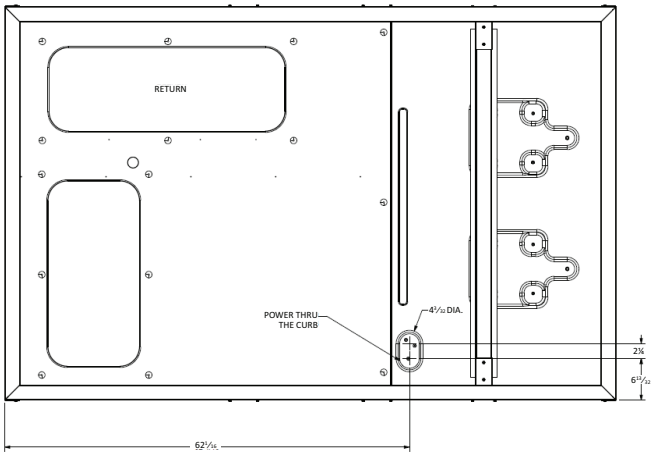


# Unit Clearances

## Service Clearance

Allow for recommended service clearances as shown in figure to the right. In situations that have multiple units, a 36" minimum clearance is required between the condenser coils. A clearance of 48" is recommended on all sides of the unit to allow service access and to ensure proper ventilation and condenser airflow. The top of the unit should be unobstructed. Provide a roof walkway along the sides of the unit for service and access to controls and components. Contact your Daikin sales representative for service requirements less than those recommended.

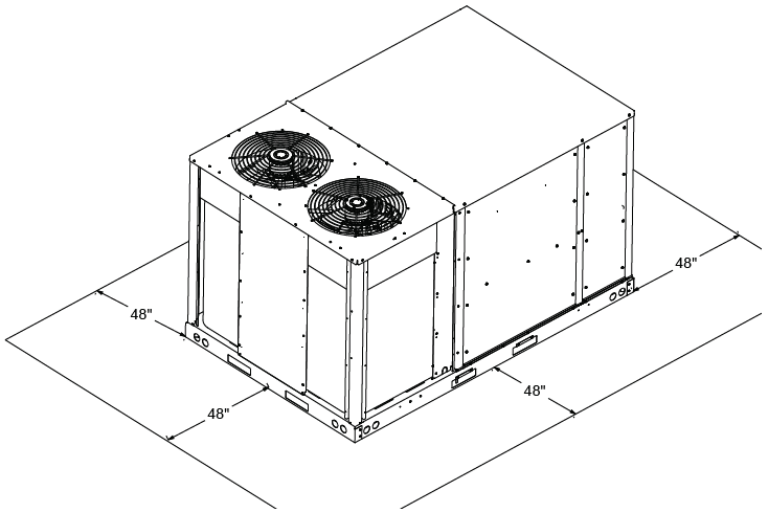


**UNIT CLEARANCES**

## Unit Location

The structural engineer must verify that the roof has adequate support and ability to minimize deflection. Take extreme caution when using on a wooden roof structure. Unit condenser coils should be in a location that avoids any heated exhaust air.

Allow sufficient space around the unit for maintenance/service clearance. Consult your Daikin sales representative if available clearances do not meet minimum recommendations.

Where code considerations, such as the NEC, require extended clearances, these take precedence.

Provisions for forks have been included in the unit base frame. No other fork locations are approved.

» Unit must be lifted by the four lifting holes located at the base frame corners.

» Lifting cables should be attached to the unit with shackles.

» The distance between the crane hook and the top of the unit must not be less than 60".

» Two spreader bars must span over the unit to prevent damage to the cabinet by the lift cables. Spreader bars must be of sufficient length so that cables do not come in contact with the unit during transport. Remove wood struts mounted beneath unit base frame before setting unit on roof curb. These struts are intended to protect unit base frame from forklift damage. To remove the struts, extract the sheet metal retainers and pull the struts through the base of the unit. Refer to rigging label on the unit.

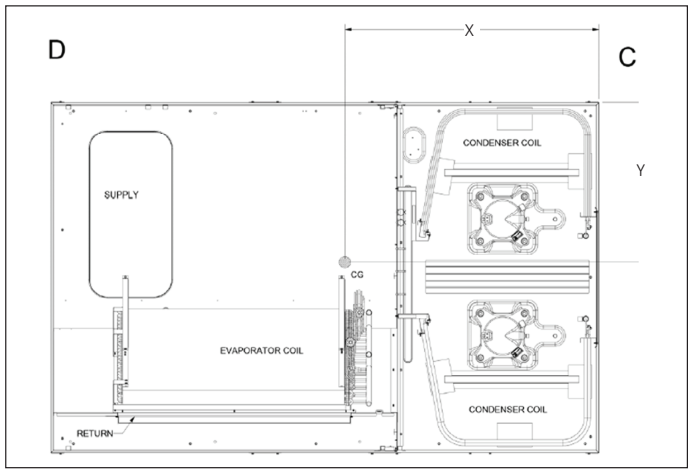


**Corner & Center-of-Gravity Locations**

**Important:** If using bottom discharge with roof curb, ductwork should be attached to the curb prior to installing the unit. Refer to the Roof Curb Installation Instructions for proper curb installation. Curbing must be installed in compliance with the National Roofing Contractors Association Manual. Lower unit carefully onto roof mounting curb. While rigging the unit, the center of gravity will cause the condenser end to be lower than the supply air end. Bring condenser end of unit into alignment with the curb. With condenser end of the unit resting on curb member and using curb as a fulcrum, lower opposite end of the unit until entire unit is seated on the curb. When a rectangular cantilever curb is used, take care to center the unit. Check for proper alignment and orientation of supply and return openings with duct.

## Roof Curb Installation

The roof curb is field-assembled and must be installed level (within 1/16" per foot side to side). A sub-base must be constructed by the contractor in applications involving pitched roofs. Gaskets are furnished and must be installed between the unit and curb. For proper installation, follow NRCA guidelines. In applications requiring post and rail installation, an I-beam securely mounted on multiple posts should support the unit on each side. In addition, the insulation on the underside of the unit should be protected from the elements. Applications in geographic areas subjected to seismic or hurricane conditions must meet code requirements for fastening the unit to the curb and the curb to the building structure. For further and more detailed information please refer to our Daikin Light Commercial Packaged unit IOD.

## Weights

| Model | Shipping Weight (lbs) | Operating Weight (lbs) | Corner Weights (lbs) | | | | Length | Width |
|---|---|---|---|---|---|---|---|---|
| | | | A | B | C | D | X (in) | Y (in) |
| DSH090 | 1200 | 1120 | 226 | 282 | 342 | 350 | 45 | 26 |
| DSH102 | 1214 | 1134 | 302 | 224 | 381 | 227 | 41 | 27 |
| DSH120 | 1234 | 1154 | 271 | 286 | 353 | 244 | 39 | 28 |

For details on accessories refer to document **PM-LC-ACCESSORIES**

Our continuing commitment to quality products may mean a change in specifications without notice.
©2024 ***DAIKIN COMFORT TECHNOLOGIES MANUFACTURING, L.P.*** • Houston, Texas • Printed in the USA.