DSG Commercial

R32 Standard Efficiency Gas/Electric Direct-Drive Packaged Rooftop Unit 3-6 Ton DSG Light Commercial

3-5 TON - Up to 14 SEER2/12 EER2
6 TON - 16.7 IEER/11.8 EER

20 YEAR HEAT EXCHANGER LIMITED WARRANTY*

5 YEAR PARTS LIMITED WARRANTY*

C ETL LISTED US Intertek

AHRI CERTIFIED www.ahridirectory.org Unitary Small AC AHRI Standard 210/240

ISO 9001 QUALITY MANAGEMENT SYSTEM GLOBAL QUALITY STANDARDS

ISO 14001 CERTIFIED ENVIRONMENTAL MANAGEMENT SYSTEM

R32

*Complete warranty details available from your local distributor or manufacturer's representative or at www.daikincomfort.com or www.daikinac.com

Supersedes 12/24

Our Perfect Package:

Harnessing energy-efficient performance, proven technology, and enhanced comfort for life.

Since becoming the first company in Japan to manufacture packaged air conditioning systems, in 1951, Daikin has supported comfortable indoor living based on the strengths and technologies that have led to the growth of the company becoming one of the world's largest manufacturers of HVAC products, systems and refrigerants.

Today, as a comprehensive global manufacturer of HVAC products and systems, the Daikin brand is committed to being recognized as a truly global and excellent company capable of continually creating new value for its customers. The company plans to pursue sustainable growth and foster business operations that consistently harmonize with the goals of improving indoor comfort.

The group philosophy of the company includes:

- Creating new value continuously for customers
- Developing world leading energy-saving technology
- Being a flexible and dynamic organization
- Allowing employees to be the driving force for the success of the company
- Fostering an atmosphere of best practices, boldness, and innovation
- Thinking and acting globally

Contents

2	**Introduction**	2
4	**Nomenclature**	4
5	**Features and Benefits**	5
	Applications	8
	Serviceability	8
9	**Product Specifications**	9
	Coil Dimensions	23
	AHRI Ratings	23
	Sound Data	23
24	**Dimensional Data**	24
25	**Expanding Cooling Data**	25
35	**Heating Data**	35
37	**Air Flow**	37
123	**Static Pressure**	123
124	**Electrical Data**	124
128	**Wiring Diagrams**	128
137	**Electrical Connections**	137
	Unit Clearances	137
138	**Installation**	138
	Weights	139

For details on accessories refer to document **PM-LC-ACCESSORIES**

Nomenclature

D	S	G	120	3	S	400	C	A	A	X	X	X	X	X	X	X	X	A	*
1	2	3	4,5,6	7	8	9,10,11	12	13	14	15	16	17	18	19	20	21	22	23	24

Revision Levels
Major & Minor

X No Options

ERW, PE Connection
X No Options
B Single-point power connection for Power Exhaust

IAQ
X No Options

Service Options
X No Option
A Powered convenience outlet
B Non-powered convenience outlet
C Hinge Panels
D Hinged Panels and Powered convenience outlet
E Hinged Panels and non-powered convenience outlet

Electrical
X No Options
A Non-Fused Disconnect
B Phase Monitor
C Thru-the-base connections
E Non-Fused Disconnect and Phase Monitor
F Non-Fused Disconnect and Thru-the-base connectons
H Phase Monitor and Thru-the-base connections
L Non-Fused Disconnect, Thru-the-base connectons and Phase Monitor

Economizer
X No Options
A Ultra Low-Leak Downflow Economizer w/ Enthalpy Sensor
C Low-Leak Downflow Economizer w/ Enthalpy Sensor
E Ultra Low-Leak Downflow Economizer for DDC controls w/ Enthalpy Sensor
F Low-Leak Internal Horizontal Economizer w/ Enthalpy Sensor
G Ultra Low-Leak Downflow Economizer w/ Dry Bulb Sensor
J Ultra Low-Leak Internal Horizontal Economizer w/ Dry Bulb Sensor
L Ultra Low-Leak Internal Horizontal Economizer w/ Dry Bulb Sensor
M Ultra Low-Leak Horizontal Economizer for DDC controls w/ Dry Bulb Sensor

Coils, Hail guard
X No Options
C Hail Guard

Sensors
D R32 Sensor
E RA Smoke Detector
F SA Smoke Detector
G RA & SA Smoke Detector

Brand
D Daikin

Configuration
S R32 Standard Efficiency
H R 32 High Efficiency

Application
C Cooling
G Gas/Electric
H Heat Pump

Nominal Cooling Capacity

036	3 Tons	090	7½ Tons	240	20 Tons
048	4 Tons	102	8½ Tons	300	25 Tons
060	5 Tons	120	10 Tons		
072	6 Tons	150	12½ tons		

Voltage

1	208-230/1/60	4	460/3/60
3	208-230/3/60	7	575/3/60

Supply Fan/Drive Type/Motor
D Direct Drive - Standard Static
L Direct Drive -Medium Static
W Direct Drive - High Static

Nominal Heating Capacity

Gas/Electric

045	45,000 BTU/h
060	60,000 BTU/h
070	70,000 BTU/h
080	80,000 BTU/h
090	90,000 BTU/h
100	100,000 BTU/h
115	115,000 BTU/h
125	125,000 BTU/h
130	130,000 BTU/h
140	140,000 BTU/h
150	150,000 BTU/h
180	180,000 BTU/h
210	210,000 BTU/h
225	225,000 BTU/h
240	240,000 BTU/h
260	260,000 BTU/h
350	350,000 BTU/h
360	360,000 BTU/h
400	400,000 BTU/h
480	480,000 BTU/h

A/C H/P Factory-Installed Electric Heat

XXX	No Heat
005	5kW
010	10 kW
015	15 kW
020	20 kW
030	30 kW
045	45kW
060	60kW
075	75kW

Electric Heat w/ SCR controls

S05	5kW	S22	20 kW
S10	10 kW	S25	25 kW
S15	15 kW	S30	30 kW
S16	15 kW	S31	30 kW
S18	18 kW	S45	45 kW
S20	20 kW	S46	45 kW
S21	20 kW	S60	60 kW
		S75	75kW

Refrigeration Systems
A Single stage cooling modes
C Two stage cooling modes
F Two stage cooling modes with Hot Gas Reheat and Low-ambient control
G Single stage cooling mode with Low-ambient controller
H Two stage cooling mode with Low-ambient controller

Heat Exchanger
X No options
A Standard Aluminized Exchanger
S Stainless Steel Exchanger
U Ultra Low Nox Stainless Steel Exchanger

Controls
A Electro-mechanical controls
B DDC w/ BACnet interface

G/E Stocking Models

New Daikin 3-6 Ton Direct Drive

Model Number	Codestring	Model Number	Codestring	Model Number	Codestring	Model Number	Codestring
DSG0601DL00001S	DSG0601D090AAADXXXXXXXAA	DSG0361DH00001S	DSG0361D090AAADXXXXXXXAA	DSG0367DH00001S	DSG0367D090AAADXXXXXXXAA	DSG0723DL00001S	DSG0723D090CAADXXXXXXXAA
DSG0601DH00001S	DSG0601D140AAADXXXXXXXAA	DSG0361D100001F	DSG0361D100AUADXXXXXXXAA	DSG0481DL00001S	DSG0481D090AAADXXXXXXXAA	DSG0723DM00001S	DSG0723D115CAADXXXXXXXAA
DSG0601D100001F	DSG0601D100AUADXXXXXXXAA	DSG0361D600001F	DSG0361D060AUADXXXXXXXAA	DSG0481DH00001S	DSG0481D115AAADXXXXXXXAA	DSG0723DH00001S	DSG0723D140CAADXXXXXXXAA
DSG0601D800001F	DSG0601D080AUADXXXXXXXAA	DSG0361D800001F	DSG0361D080AUADXXXXXXXAA	DSG0481D100001F	DSG0481D100AUADXXXXXXXAA	DSG0724DL00001S	DSG0724D090CAADXXXXXXXAA
DSG0603DL00001S	DSG0603D090AAADXXXXXXXAA	DSG0363DL00001S	DSG0363D045AAADXXXXXXXAA	DSG0481D800001F	DSG0481D080AUADXXXXXXXAA	DSG0724DM00001S	DSG0724D115CAADXXXXXXXAA
DSG0603DM00001S	DSG0603D115AAADXXXXXXXAA	DSG0363DM00001S	DSG0363D070AAADXXXXXXXAA	DSG0483DL00001S	DSG0483D070AAADXXXXXXXAA	DSG0724DH00001S	DSG0724D140CAADXXXXXXXAA
DSG0603DH00001S	DSG0603D140AAADXXXXXXXAA	DSG0363DH00001S	DSG0363D090AAADXXXXXXXAA	DSG0483DM00001S	DSG0483D090AAADXXXXXXXAA	DSG0727DL00001S	DSG0727D090CAADXXXXXXXAA
DSG0603D100001F	DSG0603D100AUADXXXXXXXAA	DSG0363D100001F	DSG0363D100AUADXXXXXXXAA	DSG0483DH00001S	DSG0483D115AAADXXXXXXXAA	DSG0727DM00001S	DSG0727D115CAADXXXXXXXAA
DSG0603D800001F	DSG0603D080AUADXXXXXXXAA	DSG0363D600001F	DSG0363D060AUADXXXXXXXAA	DSG0483D100001F	DSG0483D100AUADXXXXXXXAA	DSG0727DH00001S	DSG0727D140CAADXXXXXXXAA
DSG0604DL00001S	DSG0604D090AAADXXXXXXXAA	DSG0363D8000001F	DSG0363D080AUADXXXXXXXAA	DSG0483D800001F	DSG0483D080AUADXXXXXXXAA	DSG0723WL00001F	DSG0723W090CAADXXXXXXXAA
DSG0604DM00001S	DSG0604D115AAADXXXXXXXAA	DSG0364DL00001S	DSG0364D045AAADXXXXXXXAA	DSG0484DL00001S	DSG0484D070AAADXXXXXXXAA	DSG0723WM00001F	DSG0723W115CAADXXXXXXXAA
DSG0604DH00001S	DSG0604D115AAADXXXXXXXAA	DSG0364DM00001S	DSG0364D070AAADXXXXXXXAA	DSG0484DM00001S	DSG0484D090AAADXXXXXXXAA	DSG0723WH00001F	DSG0723W140CAADXXXXXXXAA
DSG0604D100001F	DSG0604D100AUADXXXXXXXAA	DSG0364DH00001S	DSG0364D090AAADXXXXXXXAA	DSG0484DH00001S	DSG0484D115AAADXXXXXXXAA	DSG0724WL00001F	DSG0724W090CAADXXXXXXXAA
DSG0604D800001F	DSG0604D080AUADXXXXXXXAA	DSG0364D100001F	DSG0364D100AUADXXXXXXXAA	DSG0484D100001F	DSG0484D100AUADXXXXXXXAA	DSG0724WM00001F	DSG0724W115CAADXXXXXXXAA
DSG0607DH00001S	DSG0607D140AAADXXXXXXXAA	DSG0364D600001F	DSG0364D060AUADXXXXXXXAA	DSG0484D800001F	DSG0484D080AUADXXXXXXXAA	DSG0724WH00001F	DSG0724W140CAADXXXXXXXAA
DSG0361DL00001S	DSG0361D045AAADXXXXXXXAA	DSG0364D800001F	DSG0364D080AUADXXXXXXXAA	DSG0487DH00001S	DSG0487D115AAADXXXXXXXAA	DSG0727WL00001F	DSG0727W090CAADXXXXXXXAA
						DSG0727WM00001F	DSG0727W115CAADXXXXXXXAA
						DSG0727WH00001F	DSG0727W140CAADXXXXXXXAA

Daikin Packaged Rooftop Units (RTUs) are built to perform, with features and options that help provide low installation and operation costs, superior indoor air quality, efficient operation, and longevity.

Installation

Daikin Packaged units are designed with fast and easy installation in mind and are ideal for both new construction and retrofit projects. Our packaged rooftop units are built to be a direct replacement for most rooftop units in the field without the need of a curb adapter.

Cabinet Construction

Daikin packaged rooftop units are made with high quality galvanized steel with a powder-paint finish to provide higher corrosion resistance.

- » Easy accessibility using our tool-less filter access (available on small chassis).
- » Unit is fully insulated to prevent sweating and thermal losses, using our foil face fiberglass insulation which also omits exposed filter fibers into the airstream.
- » 1" Raised flanges around the supply and return.
- » The full perimeter base rail is built using heavy gauge galvanized steel for a stronger structural installation. The base rails are a minimum of 3 ½" tall and include holes to allow for overhead rigging and lifting with forklifts.

- » Electrical lines and gas lines can be brought through the base of the unit or through the horizontal knockout for easy installation and accessibility on the field.

Compressor

High performance, low noise scroll compressors to match the required total load.

- » Resiliently factory-mounted on rubber grommets for vibration isolation
- » Refrigeration circuit includes both high and low pressure safety switches.
- » Unit is factory charged with environmentally friendly low gwp R32 refrigerant.
- » Single stage 3-5, 6 ton 2-stage compressor.
- » Compressor location outside the condenser section to avoid air bypass.
- » Internal overload protection included with compressor.

Supply Fan

The direct-drive with airfoil single width, single inlet (SWSI) Class II construction supply fan with aluminum fan +blades provides efficient and quiet operation at wide ranging static pressure and air flow requirements.

- » Ball bearing Direct-Drive EEM motor removes the need for belts, sheaves, bearings and lubrication.
- » Each fan assembly is dynamically trim balanced at the factory before shipment for quick start-up and efficient operation.
- » Electromechanical integrated controls modulate the supply fan motor
- » Motor equipped with thermal overload to provide protection and lasting operation.

Coils

The indoor coil section is installed in a draw through configuration to provide better dehumidification. These coils are constructed with seamless copper tubes, mechanically bonded into aluminum plate-type fins with full drawn collars to completely cover the tubes for high operating efficiencies.

- » Coils are factory pressure tested to ensure pressure and leak integrity.
- » Copper tube / aluminum fin coils on evaporator
- » All units use large face area outdoor coils
- » Microchannel heat exchanger technology on all condenser coils for improved performance and reduced refrigerant load.

Controls and Wiring

Packaged rooftop units come equipped with a well-organized, large, easy to use, weatherproof internal control box with easy access, for a better user experience Terminal strips are provided as standard for easy installation and low voltage power wiring.

» Terminal strips are provided as standard for easy installation and low voltage power wiring.

» Units are factory-wired with color-coded wires and complete 24-volt Electromechanical controls package.

Filtration

Unit provides a draw-through filter section as standard for better air quality and long lasting component maintenance.

» Filters installed on the units are standard off the shelf sizes for easy replacement.

Heating Section

Wide range of natural gas selections effectively handle most comfort heating demands from morning warm-up control to full heat, all available with Daikin's Wrinkle Bend heat exchanger technology.

Gas Furnace

ETL certified heating modules provide a custom match to specific design requirement.

» Wrinkle Bend Technology available on all Daikin gas heat exchangers. The Wrinkle Bend Technology reduces the manufacturing stress that leads to defects and pinholes in the tubes at the same time as it increases the gas turbulence to amplify the heat transfer.

» All single phase 5 ton Gas units have 81% AFUE.

» All 3-Phase models have a minimum 81% T.E. (Thermal Efficiency)

» User has the flexibility to order heat exchanger tubes with 20 Gauge, G160, aluminized steel or stainless steel to meet your application needs.

» The furnace has a tubular design with in-shot gas burner manifold and is installed downstream of the supply fan.

» The module contains an induced draft fan that will maintain a negative pressure in the heat exchanger tubes for the removal of the flue gases to protect indoor air quality.

» Each burner module provides flame roll-out safety protection switches and a high temperature limit switch for reliable operation.

» Induced draft fan includes an airflow safety switch to prevent heating operation in the event of no airflow for occupant safety.

» All burner assemblies are factory tested and adjusted prior to shipment.

» Heating control is fully integrated into the unit's control system for quick start-up and reliable control.

» Optional field installed LP kits are available for staged heating modules as well as high altitude kits.

Electrical

Units are completely wired and tested at the factory to provide faster commissioning and start-up.

» Wiring complies with NEC requirements and all applicable UL standards.

» For ease of use, wiring and electrical components are color coded and labeled according to the electrical diagram.

» A 115 V GFI convenience outlet requiring independent power supply is available as an option.

» An optional unit powered 20 amp 115 V convenience outlet, complete with factory mounted transformer, disconnect switch, and primary and secondary overload protection, eliminates the need to pull a separate 115 V power source.

» Supply air fan, compressor, and condenser fan motor branch circuits have individual short circuit protection.

» For better serviceability an optional non-fused disconnect switch can be installed and operated by an externally mounted handle to disconnect the electrical power at the unit.

DAIKIN

Applications

Daikin Rooftop units are intended for comfort cooling applications in normal heating, ventilating, and air conditioning. Consult your local Daikin sales representative for applications involving operations at high ambient temperatures, high altitudes, non-cataloged voltages, or for job-specific unit selections that fall outside of the range of the catalog tables.

For proper operation, units should be rigged in accordance with instructions stated on the installation manual. Fire dampers, if required, must be installed in the ductwork according to local and/or state codes. No space is allowed for these dampers in the unit.

Follow factory check, test and start procedures explicitly to achieve satisfactory start-up and operation.

Most rooftop applications take advantage of the significant energy savings provided with economizer operation. When an economizer system is used, mechanical refrigeration is typically not required below an ambient temperature of 50°F.

Serviceability

Daikin packaged rooftop units are built with serviceability in mind, designed to make future maintenance and service on the unit easy and accessible.

- Our packaged rooftop units offer a slide out blower to facilitate the access and removal of the fan.
- Filter panels on the small chassis line offer tool-less access for easy maintenance.
- Independent compressor outside of the air bypass to eliminate component blockage and provide easy access.
- Color coded and wire to identify point-to-point component connections.
- All 3 - 6 ton units are designed for convertible airflow orientation to serve downflow or horizontal applications. Every unit ships prepared to convert to horizontal orientation in the field if required.
- Screw on style high and low pressure switches allow for ease of replacement without the need for refrigerant recovery.

Model	DSG0361DL00001S	DSG0361DH00001S	DSG0363DL00001S	DSG0363DM00001S	DSG0363DH00001S
COOLING CAPACITY					
Total BTU/H	35,000	35,000	35,000	35,000	35,000
SEER2 / EER2 (IEER /EER for 6T)	14 / 12	14 / 12	14 / 12	14 / 12	14 / 12
AHRI Reference #	215414874	215414874	215414875	215414875	215414875
HEATING CAPACITY					
Heat Range	Low	High	Low	Medium	High
No. of Burners	2	4	2	3	4
High Stage Input / Output (KBTU/H)	45.0/36.5	90.0/72.9	45.0/36.0	70.0/56.0	90.0/72.0
Low Stage Input / Output (KBTU/H)	--	--	33.8/27.0	52.5/42.0	67.5/54.0
Thermal Efficiency (T.E.)	--	--	80	80	80
Annual Fuel Utilization Efficiency (AFUE)	81	81	--	--	--
High Stage Temperature Rise Range (°F)	15-45	25-55	15-45	25-55	25-55
Low Stage Temperature Rise Range (°F)	--	--	10-40	20-50	20-50
EVAPORATOR MOTOR / RTPF (ROUND TUBE PLATE FIN)					
Motor Type	Direct Drive	Direct Drive	Direct Drive	Direct Drive	Direct Drive
External Static Pressure (ESP)	Standard	Standard	Standard	Standard	Standard
Wheel Dia. X Width	12 x 11	12 x 11	12 x 11	12 x 11	12 x 11
Indoor Nominal CFM	1160	1160	1160	1160	1160
RPM	1200 MAX	1200 MAX	1200 MAX	1200 MAX	1200 MAX
Indoor Horsepower	3/4	3/4	3/4	3/4	3/4
Filter Size (in)	20 X 25 X 2 (2)	20 X 25 X 2 (2)	20 X 25 X 2 (2)	20 X 25 X 2 (2)	20 X 25 X 2 (2)
Drain Size (NPT)	3/4	3/4	3/4	3/4	3/4
R-32 Refrigerant Charge (oz.)	46	46	46	46	46
Evaporator Coil Face Area (ft^2)	6.41	6.41	6.41	6.41	6.41
Rows Deep/ Fins per Inch	2 / 16	2 / 16	2 / 16	2 / 16	2 / 16
CONDENSER FAN / MCHX (MICROCHANNEL HEAT EXCHANGER)					
Quantity of Condenser Fan Motors	1	1	1	1	1
RPM (High/Low stage)	810	810	810	810	810
Outdoor Horsepower	1/6	1/6	1/6	1/6	1/6
Fan Diameter/ # Fan Blades	22 / 3	22 / 3	22 / 3	22 / 3	22 / 3
Face Area (ft^2)	12.3	12.3	12.3	12.3	12.3
Rows Deep / Fins per Inch	1 / 23	1 / 23	1 / 23	1 / 23	1 / 23
COMPRESSOR (ALL SINGLE-STAGE)					
Quantity / Type / Stages	1 / Scroll / 1	1 / Scroll / 1	1 / Scroll / 1	1 / Scroll / 1	1 / Scroll / 1
Compressor RLA / LRA	16.4 / 88	16.4 / 88	10.6 / 97.5	10.6 / 97.5	10.6 / 97.5
ELECTRICAL DATA					
Voltage-Phase-Frequency	208/230-1-60	208/230-1-60	208/230-3-60	208/230-3-60	208/230-3-60
Indoor Blower FLA	5.7	5.7	5.7	5.7	5.7
Max External Static (In. W.C.)	0.8	0.8	0.8	0.8	0.8
Outdoor Fan FLA	0.95	0.95	0.95	0.95	0.95
Min. Circuit Ampacity[1]	27.2/27.2	27.2/27.2	19.9/19.9	19.9/19.9	19.9/19.9
Max. Overcurrent Protection (A)[2]	40/40	40/40	30/30	30/30	30/30
Power Supply Conduit Hole Dia. (in)	1.125	1.125	1.125	1.125	1.125
Low-Voltage Conduit Hole Dia. (in)	0.5	0.5	0.5	0.5	0.5
OPERATING WEIGHT (LBS.)					
Operating Weight (lbs)	500	512	498	504	510
SHIPPING WEIGHT (LBS.)					
Ship Weight (lbs)	570	582	568	574	580

[1] Wire size should be determined in accordance with National Electrical Codes. Extensive wire runs will require larger wire sizes.
[2] May use fuses or HACR-type circuit breakers of the same size as noted.
Note: Always check the S&R plate for electrical data on the unit being installed.

Model	DSG0364DL00001S	DSG0364DM00001S	DSG0364DH00001S	DSG0367DH00001S	DSG0361D600001F
COOLING CAPACITY					
Total BTU/H	35,000	35,000	35,000	35,000	35,000
SEER2 / EER2 (IEER /EER for 6T)	14 / 12	14 / 12	14 / 12	14 / 12	14 / 12
AHRI Reference #	215414876	215414876	215414876	215414877	215414874
HEATING CAPACITY					
Heat Range	Low	Medium	High	High	Low
No. of Burners	2	3	4	4	3
High Stage Input / Output (KBTU/H)	45.0/36.0	70.0/56.0	90.0/72.0	90.0/72.0	60.0/48.6
Low Stage Input / Output (KBTU/H)	33.8/27.0	52.5/42.0	67.5/54.0	67.5/54.0	--
Thermal Efficiency (T.E.)	80	80	80	80	--
Annual Fuel Utilization Efficiency (AFUE)	--	--	--	--	81
High Stage Temperature Rise Range (°F)	15-45	25-55	25-55	25-55	30-60
Low Stage Temperature Rise Range (°F)	10-40	20-50	20-50	20-50	--
EVAPORATOR MOTOR / RTPF (ROUND TUBE PLATE FIN)					
Motor Type	Direct Drive	Direct Drive	Direct Drive	Direct Drive	Direct Drive
External Static Pressure (ESP)	Standard	Standard	Standard	Standard	Standard
Wheel Dia. X Width	12 x 11	12 x 11	12 x 11	12 x 11	12 x 11
Indoor Nominal CFM	1160	1160	1160	1160	1160
RPM	1500 MAX	1500 MAX	1500 MAX	1500 MAX	1200 MAX
Indoor Horsepower	1.2	1.2	1.2	1.2	3/4
Filter Size (in)	20 X 25 X 2 (2)	20 X 25 X 2 (2)	20 X 25 X 2 (2)	20 X 25 X 2 (2)	20 X 25 X 2 (2)
Drain Size (NPT)	3/4	3/4	3/4	3/4	3/4
R-32 Refrigerant Charge (oz.)	46	46	46	46	46
Evaporator Coil Face Area (ft^2)	6.41	6.41	6.41	6.41	6.41
Rows Deep/ Fins per Inch	2 / 16	2 / 16	2 / 16	2 / 16	2 / 16
CONDENSER FAN / MCHX (MICROCHANNEL HEAT EXCHANGER)					
Quantity of Condenser Fan Motors	1	1	1	1	1
RPM (High/Low stage)	810	810	810	810	810
Outdoor Horsepower	1/6	1/6	1/6	1/6	1/6
Fan Diameter/ # Fan Blades	22 / 3	22 / 3	22 / 3	22 / 3	22 / 3
Face Area (ft^2)	12.3	12.3	12.3	12.3	12.3
Rows Deep / Fins per Inch	1 / 23	1 / 23	1 / 23	1 / 23	1 / 23
COMPRESSOR (ALL SINGLE-STAGE)					
Quantity / Type / Stages	1 / Scroll / 1	1 / Scroll / 1	1 / Scroll / 1	1 / Scroll / 1	1 / Scroll / 1
Compressor RLA / LRA	4.9 / 44.3	4.9 / 44.3	4.9 / 44.3	3.8 / 27.1	16.4 / 88
ELECTRICAL DATA					
Voltage-Phase-Frequency	460-3-60	460-3-60	575-3-60	575-3-60	208/230-1-60
Indoor Blower FLA	2.5	2.5	2.5	2	5.7
Max External Static (In. W.C.)	0.8	0.8	0.8	0.8	0.8
Outdoor Fan FLA	0.48	0.48	0.48	0.39	0.95
Min. Circuit Ampacity[1]	9.1	9.1	9.1	7.2	27.2/27.2
Max. Overcurrent Protection (A)[2]	15	15	15	15	40/40
Power Supply Conduit Hole Dia. (in)	1.125	1.125	1.125	1.125	1.125
Low-Voltage Conduit Hole Dia. (in)	0.5	0.5	0.5	0.5	0.5
OPERATING WEIGHT (LBS.)					
Operating Weight (lbs)	506	511	516	516	506
SHIPPING WEIGHT (LBS.)					
Ship Weight (lbs)	576	581	586	586	576

[1] Wire size should be determined in accordance with National Electrical Codes. Extensive wire runs will require larger wire sizes.
[2] May use fuses or HACR-type circuit breakers of the same size as noted.
Note: Always check the S&R plate for electrical data on the unit being installed.

Model	DSG0361D800001F	DSG0361D100001F	DSG0363D600001F	DSG0363D800001F	DSG0363D100001F
COOLING CAPACITY					
Total BTU/H	35,000	35,000	35,000	35,000	35,000
SEER2 / EER2 (IEER /EER for 6T)	14 / 12	14 / 12	14 / 12	14 / 12	14 / 12
AHRI Reference #	215414874	215414874	215414875	215414875	215414875
HEATING CAPACITY					
Heat Range	Medium	High	Low	Medium	High
No. of Burners	4	5	3	4	5
High Stage Input / Output (KBTU/H)	80.0/64.8	100.0/81.0	60.0/48.0	80.0/64.0	100.0/80.0
Low Stage Input / Output (KBTU/H)	--	--	--	--	--
Thermal Efficiency (T.E.)	--	--	80	80	80
Annual Fuel Utilization Efficiency (AFUE)	81	81	--	--	--
High Stage Temperature Rise Range (°F)	30-60	40-70	30-60	30-60	40-70
Low Stage Temperature Rise Range (°F)	--	--	--	--	--
EVAPORATOR MOTOR / RTPF (ROUND TUBE PLATE FIN)					
Motor Type	Direct Drive	Direct Drive	Direct Drive	Direct Drive	Direct Drive
External Static Pressure (ESP)	Standard	Standard	Standard	Standard	Standard
Wheel Dia. X Width	12 x 11	12 x 11	12 x 11	12 x 11	12 x 11
Indoor Nominal CFM	1160	1160	1160	1160	1160
RPM	1200 MAX	1200 MAX	1200 MAX	1200 MAX	1200 MAX
Indoor Horsepower	3/4	3/4	3/4	3/4	3/4
Filter Size (in)	20 X 25 X 2 (2)	20 X 25 X 2 (2)	20 X 25 X 2 (2)	20 X 25 X 2 (2)	20 X 25 X 2 (2)
Drain Size (NPT)	3/4	3/4	3/4	3/4	3/4
R-32 Refrigerant Charge (oz.)	46	46	46	46	46
Evaporator Coil Face Area (ft^2)	6.41	6.41	6.41	6.41	6.41
Rows Deep/ Fins per Inch	2 / 16	2 / 16	2 / 16	2 / 16	2 / 16
CONDENSER FAN / MCHX (MICROCHANNEL HEAT EXCHANGER)					
Quantity of Condenser Fan Motors	1	1	1	1	1
RPM (High/Low stage)	810	810	810	810	810
Outdoor Horsepower	1/6	1/6	1/6	1/6	1/6
Fan Diameter/ # Fan Blades	22 / 3	22 / 3	22 / 3	22 / 3	22 / 3
Face Area (ft^2)	12.3	12.3	12.3	12.3	12.3
Rows Deep / Fins per Inch	1 / 23	1 / 23	1 / 23	1 / 23	1 / 23
COMPRESSOR (ALL SINGLE-STAGE)					
Quantity / Type / Stages	1 / Scroll / 1	1 / Scroll / 1	1 / Scroll / 1	1 / Scroll / 1	1 / Scroll / 1
Compressor RLA / LRA	16.4 / 88	16.4 / 88	10.6 / 97.5	10.6 / 97.5	10.6 / 97.5
ELECTRICAL DATA					
Voltage-Phase-Frequency	208/230-1-60	208/230-1-60	208/230-3-60	208/230-3-60	208/230-3-60
Indoor Blower FLA	5.7	5.7	5.7	5.7	5.7
Max External Static (In. W.C.)	0.8	0.8	0.8	0.8	0.8
Outdoor Fan FLA	0.95	0.95	0.95	0.95	0.95
Min. Circuit Ampacity[1]	27.2/27.3	27.2/27.4	19.9/19.9	19.9/19.9	19.9/19.9
Max. Overcurrent Protection (A)[2]	40/40	40/40	30/30	30/30	30/30
Power Supply Conduit Hole Dia. (in)	1.125	1.125	1.125	1.125	1.125
Low-Voltage Conduit Hole Dia. (in)	0.5	0.5	0.5	0.5	0.5
OPERATING WEIGHT (LBS.)					
Operating Weight (lbs)	512	519	504	510	517
SHIPPING WEIGHT (LBS.)					
Ship Weight (lbs)	582	589	574	580	587

[1] Wire size should be determined in accordance with National Electrical Codes. Extensive wire runs will require larger wire sizes.
[2] May use fuses or HACR-type circuit breakers of the same size as noted.
Note: Always check the S&R plate for electrical data on the unit being installed.

Model	DSG0364D600001F	DSG0364D800001F	DSG0364D100001F
COOLING CAPACITY			
Total BTU/H	35,000	35,000	35,000
SEER2 / EER2 (IEER /EER for 6T)	14 / 12	14 / 12	14 / 12
AHRI Reference #	215414876	215414876	215414876
HEATING CAPACITY			
Heat Range	Low	Medium	High
No. of Burners	3	4	5
High Stage Input / Output (KBTU/H)	60.0/48.0	80.0/64.0	100.0/80.0
Low Stage Input / Output (KBTU/H)	--	--	--
Thermal Efficiency (T.E.)	80	80	80
Annual Fuel Utilization Efficiency (AFUE)	--	--	--
High Stage Temperature Rise Range (°F)	30-60	30-60	40-70
Low Stage Temperature Rise Range (°F)	--	--	--
EVAPORATOR MOTOR / RTPF (ROUND TUBE PLATE FIN)			
Motor Type	Direct Drive	Direct Drive	Direct Drive
External Static Pressure (ESP)	Standard	Standard	Standard
Wheel Dia. X Width	12 x 11	12 x 11	12 x 11
Indoor Nominal CFM	1160	1160	1160
RPM	1500 MAX	1500 MAX	1500 MAX
Indoor Horsepower	1.2	1.2	1.2
Filter Size (in)	20 X 25 X 2 (2)	20 X 25 X 2 (2)	20 X 25 X 2 (2)
Drain Size (NPT)	3/4	3/4	3/4
R-32 Refrigerant Charge (oz.)	46	46	46
Evaporator Coil Face Area (ft^2)	6.41	6.41	6.41
Rows Deep/ Fins per Inch	2 / 16	2 / 16	2 / 16
CONDENSER FAN / MCHX (MICROCHANNEL HEAT EXCHANGER)			
Quantity of Condenser Fan Motors	1	1	1
RPM (High/Low stage)	810	810	810
Outdoor Horsepower	1/6	1/6	1/6
Fan Diameter/ # Fan Blades	22 / 3	22 / 3	22 / 3
Face Area (ft^2)	12.3	12.3	12.3
Rows Deep / Fins per Inch	1 / 23	1 / 23	1 / 23
COMPRESSOR (ALL SINGLE-STAGE)			
Quantity / Type / Stages	1 / Scroll / 1	1 / Scroll / 1	1 / Scroll / 1
Compressor RLA / LRA	4.9 / 44.3	4.9 / 44.3	4.9 / 44.3
ELECTRICAL DATA			
Voltage-Phase-Frequency	460-3-60	460-3-60	460-3-60
Indoor Blower FLA	2.5	2.5	2.5
Max External Static (In. W.C.)	0.8	0.8	0.8
Outdoor Fan FLA	0.48	0.48	0.48
Min. Circuit Ampacity[1]	9.1	9.1	9.1
Max. Overcurrent Protection (A)[2]	15	15	15
Power Supply Conduit Hole Dia. (in)	1.125	1.125	1.125
Low-Voltage Conduit Hole Dia. (in)	0.5	0.5	0.5
OPERATING WEIGHT (LBS.)			
Operating Weight (lbs)	511	516	520
SHIPPING WEIGHT (LBS.)			
Ship Weight (lbs)	581	586	590

[1] Wire size should be determined in accordance with National Electrical Codes. Extensive wire runs will require larger wire sizes.
[2] May use fuses or HACR-type circuit breakers of the same size as noted.
Note: Always check the S&R plate for electrical data on the unit being installed.

Model	DSG0481DL00001S	DSG0481DH00001S	DSG0483DL00001S	DSG0483DM00001S	DSG0483DH00001S
COOLING CAPACITY					
Total BTU/H	46,000	46,000	46,000	46,000	46,000
SEER2 / EER2 (IEER /EER for 6T)	13.7 / 11.8	13.7 / 11.8	13.7 / 11.8	13.7 / 11.8	13.7 / 11.8
AHRI Reference #	215414878	215414878	215414879	215414879	215414879
HEATING CAPACITY					
Heat Range	Low	High	Low	Medium	High
No. of Burners	4	5	3	4	5
High Stage Input / Output (KBTU/H)	90.0/72.9	115.0/93.2	70.0/56.0	90.0/72.0	115.0/92.0
Low Stage Input / Output (KBTU/H)	--	--	52.5/42.0	67.5/54.0	86.3/69.0
Thermal Efficiency (T.E.)	--	--	80	80	80
Annual Fuel Utilization Efficiency (AFUE)	81	81	--	--	--
High Stage Temperature Rise Range (°F)	25-55	30-60	25-55	25-55	30-60
Low Stage Temperature Rise Range (°F)	--	--	20-50	20-50	25-55
EVAPORATOR MOTOR / RTPF (ROUND TUBE PLATE FIN)					
Motor Type	Direct Drive	Direct Drive	Direct Drive	Direct Drive	Direct Drive
External Static Pressure (ESP)	Standard	Standard	Standard	Standard	Standard
Wheel Dia. X Width	12 x 11	12 x 11	12 x 11	12 x 11	12 x 11
Indoor Nominal CFM	1600	1600	1600	1600	1600
RPM	1200 MAX	1200 MAX	1200 MAX	1200 MAX	1200 MAX
Indoor Horsepower	1.0	1.0	1.0	1.0	1.0
Filter Size (in)	20 X 25 X 2 (2)	20 X 25 X 2 (2)	20 X 25 X 2 (2)	20 X 25 X 2 (2)	20 X 25 X 2 (2)
Drain Size (NPT)	3/4	3/4	3/4	3/4	3/4
R-32 Refrigerant Charge (oz.)	59	59	59	59	59
Evaporator Coil Face Area (ft^2)	6.41	6.41	6.41	6.41	6.41
Rows Deep/ Fins per Inch	3 / 16	3 / 16	3 / 16	3 / 16	3 / 16
CONDENSER FAN / MCHX (MICROCHANNEL HEAT EXCHANGER)					
Quantity of Condenser Fan Motors	1	1	1	1	1
RPM (High/Low stage)	1122	1122	1122	1122	1122
Outdoor Horsepower	1/3	1/3	1/3	1/3	1/3
Fan Diameter/ # Fan Blades	22 / 4	22 / 4	22 / 4	22 / 4	22 / 4
Face Area (ft^2)	12.3	12.3	12.3	12.3	12.3
Rows Deep / Fins per Inch	1 / 23	1 / 23	1 / 23	1 / 23	1 / 23
COMPRESSOR (ALL SINGLE-STAGE)					
Quantity / Type / Stages	1 / Scroll / 1	1 / Scroll / 1	1 / Scroll / 1	1 / Scroll / 1	1 / Scroll / 1
Compressor RLA / LRA	19.4 / 127.7	19.4 / 127.7	12.2 / 120.4	12.2 / 120.4	12.2 / 120.4
ELECTRICAL DATA					
Voltage-Phase-Frequency	208/230-1-60	208/230-1-60	208/230-3-60	208/230-3-60	208/230-3-60
Indoor Blower FLA	6.9	6.9	6.9	6.9	6.9
Max External Static (In. W.C.)	0.8	0.8	0.8	0.8	0.8
Outdoor Fan FLA	2	2	2	2	2
Min. Circuit Ampacity[1]	33.1 / 33.1	33.1 / 33.1	24.1 / 24.1	24.1 / 24.1	24.1 / 24.1
Max. Overcurrent Protection (A)[2]	50 / 50	50 / 50	35/35	35/35	35/35
Power Supply Conduit Hole Dia. (in)	1.125	1.125	1.125	1.125	1.125
Low-Voltage Conduit Hole Dia. (in)	0.5	0.5	0.5	0.5	0.5
OPERATING WEIGHT (LBS.)					
Operating Weight (lbs)	537	553	532	540	548
SHIPPING WEIGHT (LBS.)					
Ship Weight (lbs)	607	623	602	610	618

[1] Wire size should be determined in accordance with National Electrical Codes. Extensive wire runs will require larger wire sizes.
[2] May use fuses or HACR-type circuit breakers of the same size as noted.
Note: Always check the S&R plate for electrical data on the unit being installed.

Model	DSG0484DL00001S	DSG0484DM00001S	DSG0484DH00001S	DSG0487DH00001S	DSG0481D800001F
COOLING CAPACITY					
Total BTU/H	46,000	46,000	46,000	46,000	46,000
SEER2 / EER2 (IEER /EER for 6T)	13.7 / 11.8	13.7 / 11.8	13.7 / 11.8	13.7 / 11.8	13.7 / 11.8
AHRI Reference #	215414880	215414880	215414880	215414881	215414878
HEATING CAPACITY					
Heat Range	Low	Medium	High	High	Medium
No. of Burners	3	4	5	5	4
High Stage Input / Output (KBTU/H)	70.0/56.0	90.0/72.0	115.0/92.0	115.0/92.0	80.0/64.8
Low Stage Input / Output (KBTU/H)	52.5/42.0	67.5/54.0	86.3/69.0	86.3/69.0	--
Thermal Efficiency (T.E.)	80	80	80	80	--
Annual Fuel Utilization Efficiency (AFUE)	--	--	--	--	81
High Stage Temperature Rise Range (°F)	25-55	25-55	30-60	30-60	25-55
Low Stage Temperature Rise Range (°F)	20-50	20-50	25-55	25-55	--
EVAPORATOR MOTOR / RTPF (ROUND TUBE PLATE FIN)					
Motor Type	Direct Drive	Direct Drive	Direct Drive	Direct Drive	Direct Drive
External Static Pressure (ESP)	Standard	Standard	Standard	Standard	Standard
Wheel Dia. X Width	12 x 11	12 x 11	12 x 11	12 x 11	12 x 11
Indoor Nominal CFM	1600	1600	1600	1600	1600
RPM	1500 MAX	1500 MAX	1500 MAX	1500 MAX	1500 MAX
Indoor Horsepower	1.2	1.2	1.2	1.2	1.0
Filter Size (in)	20 X 25 X 2 (2)	20 X 25 X 2 (2)	20 X 25 X 2 (2)	20 X 25 X 2 (2)	20 X 25 X 2 (2)
Drain Size (NPT)	3/4	3/4	3/4	3/4	3/4
R-32 Refrigerant Charge (oz.)	59	59	59	59	59
Evaporator Coil Face Area (ft^2)	6.41	6.41	6.41	6.41	6.41
Rows Deep/ Fins per Inch	3 / 16	3 / 16	3 / 16	3 / 16	3 / 16
CONDENSER FAN / MCHX (MICROCHANNEL HEAT EXCHANGER)					
Quantity of Condenser Fan Motors	1	1	1	1	1
RPM (High/Low stage)	1050	1050	1050	1050	1122
Outdoor Horsepower	1/3	1/3	1/3	1/3	1/3
Fan Diameter/ # Fan Blades	22 / 4	22 / 4	22 / 4	22 / 4	22 / 4
Face Area (ft^2)	12.3	12.3	12.3	12.3	12.3
Rows Deep / Fins per Inch	1 / 23	1 / 23	1 / 23	1 / 23	1 / 23
COMPRESSOR (ALL SINGLE-STAGE)					
Quantity / Type / Stages	1 / Scroll / 1	1 / Scroll / 1	1 / Scroll / 1	1 / Scroll / 1	1 / Scroll / 1
Compressor RLA / LRA	5.8 / 55.1	5.8 / 55.1	5.8 / 55.1	5.8 / 41	19.4 / 127.7
ELECTRICAL DATA					
Voltage-Phase-Frequency	460-3-60	460-3-60	460-3-60	575-3-60	208/230-1-60
Indoor Blower FLA	2.5	2.5	2.5	2	6.9
Max External Static (In. W.C.)	0.8	0.8	0.8	0.8	0.8
Outdoor Fan FLA	0.85	0.85	0.85	0.67	2
Min. Circuit Ampacity[1]	10.6	10.6	10.6	9.9	33.1/33.1
Max. Overcurrent Protection (A)[2]	15	15	15	15	50/50
Power Supply Conduit Hole Dia. (in)	1.125	1.125	1.125	1.125	1.125
Low-Voltage Conduit Hole Dia. (in)	0.5	0.5	0.5	0.5	0.5
OPERATING WEIGHT (LBS.)					
Operating Weight (lbs)	536	544	552	552	537
SHIPPING WEIGHT (LBS.)					
Ship Weight (lbs)	606	614	622	622	607

[1] Wire size should be determined in accordance with National Electrical Codes. Extensive wire runs will require larger wire sizes.
[2] May use fuses or HACR-type circuit breakers of the same size as noted.
Note: Always check the S&R plate for electrical data on the unit being installed.

Model	DSG0481D100001F	DSG0483D800001F	DSG0483D100001F	DSG0484D800001F	DSG0484D100001F
COOLING CAPACITY					
Total BTU/H	46,000	46,000	46,000	46,000	47,000
SEER2 / EER2 (IEER /EER for 6T)	13.7 / 11.8	13.7 / 11.8	13.7 / 11.8	13.7 / 11.8	14.0 / 11.5
AHRI Reference #	215414878	215414879	215414879	215414880	215414880
HEATING CAPACITY					
Heat Range	High	Medium	High	Medium	High
No. of Burners	5	4	5	4	5
High Stage Input / Output (KBTU/H)	100.0/81.0	80.0/64.0	100.0/80.0	80.0/64.0	100.0/80.0
Low Stage Input / Output (KBTU/H)	--	--	--	--	--
Thermal Efficiency (T.E.)	--	80	80	80	80
Annual Fuel Utilization Efficiency (AFUE)	81	--	--	--	--
High Stage Temperature Rise Range (°F)	35-65	25-55	35-65	25-55	35-65
Low Stage Temperature Rise Range (°F)	--	--	--	--	--
EVAPORATOR MOTOR / RTPF (ROUND TUBE PLATE FIN)					
Motor Type	Direct Drive	Direct Drive	Direct Drive	Direct Drive	Direct Drive
External Static Pressure (ESP)	Standard	Standard	Standard	Standard	Standard
Wheel Dia. X Width	12 x 11	12 x 11	12 x 11	12 x 11	12 x 11
Indoor Nominal CFM	1600	1600	1600	1600	1600
RPM	1200 MAX	1200 MAX	1200 MAX	1500 MAX	1500 MAX
Indoor Horsepower	1.0	1.0	1.0	1.2	1.2
Filter Size (in)	20 X 25 X 2 (2)	20 X 25 X 2 (2)	20 X 25 X 2 (2)	20 X 25 X 2 (2)	20 X 25 X 2 (2)
Drain Size (NPT)	3/4	3/4	3/4	3/4	3/4
R-32 Refrigerant Charge (oz.)	59	59	59	59	59
Evaporator Coil Face Area (ft^2)	6.41	6.41	6.41	6.41	6.41
Rows Deep/ Fins per Inch	3 / 16	3 / 16	3 / 16	3 / 16	3 / 16
CONDENSER FAN / MCHX (MICROCHANNEL HEAT EXCHANGER)					
Quantity of Condenser Fan Motors	1	1	1	1	1
RPM (High/Low stage)	1122	1122	1122	1050	1050
Outdoor Horsepower	1/3	1/3	1/3	1/3	1/3
Fan Diameter/ # Fan Blades	22 / 4	22 / 4	22 / 4	22 / 4	22 / 4
Face Area (ft^2)	12.3	12.3	12.3	12.3	12.3
Rows Deep / Fins per Inch	1 / 23	1 / 23	1 / 23	1 / 23	1 / 23
COMPRESSOR (ALL SINGLE-STAGE)					
Quantity / Type / Stages	1 / Scroll / 1	1 / Scroll / 1	1 / Scroll / 1	1 / Scroll / 1	1 / Scroll / 1
Compressor RLA / LRA	19.4 / 127.7	12.2 / 120.4	12.2 / 120.4	5.8 / 55.1	5.8 / 55.1
ELECTRICAL DATA					
Voltage-Phase-Frequency	208/230-1-60	208/230-3-60	208/230-3-60	460-3-60	460-3-60
Indoor Blower FLA	6.9	6.9	6.9	2.5	2.5
Max External Static (In. W.C.)	0.8	0.8	0.8	0.8	0.8
Outdoor Fan FLA	2	2	2	0.85	0.85
Min. Circuit Ampacity[1]	33.1/33.1	24.1/24.1	24.1/24.1	10.6	10.6
Max. Overcurrent Protection (A)[2]	50/50	35/35	35/35	15	15
Power Supply Conduit Hole Dia. (in)	1.125	1.125	1.125	1.125	1.125
Low-Voltage Conduit Hole Dia. (in)	0.5	0.5	0.5	0.5	0.5
OPERATING WEIGHT (LBS.)					
Operating Weight (lbs)	553	540	548	544	552
SHIPPING WEIGHT (LBS.)					
Ship Weight (lbs)	623	610	618	614	622

[1] Wire size should be determined in accordance with National Electrical Codes. Extensive wire runs will require larger wire sizes.
[2] May use fuses or HACR-type circuit breakers of the same size as noted.
Note: Always check the S&R plate for electrical data on the unit being installed.

Model	DSG0601DL00001S	DSG0601DH00001S	DSG0603DL00001S	DSG0603DM00001S	DSG0603DH00001S
COOLING CAPACITY					
Total BTU/H	57,500	57,500	57,500	57,500	57,500
SEER2 / EER2 (IEER /EER for 6T)	13.7 / 11.8	13.7 / 11.8	13.7 / 11.8	13.7 / 11.8	13.7 / 11.8
AHRI Reference #	215414882	215414882	215414883	215414883	215414883
HEATING CAPACITY					
Heat Range	Low	High	Low	Medium	High
No. of Burners	4	6	4	5	6
High Stage Input / Output (KBTU/H)	90.0/72.9	140.0/113.4	90.0/72.0	115.0/92.0	140.0/112.0
Low Stage Input / Output (KBTU/H)	--	--	67.5/54.0	86.3/69.0	105.0/84.0
Thermal Efficiency (T.E.)	--	--	80	80	80
Annual Fuel Utilization Efficiency (AFUE)	81	81	--	--	--
High Stage Temperature Rise Range (°F)	30-60	35-65	30-60	45-75	35-65
Low Stage Temperature Rise Range (°F)	--	--	25-55	40-70	35-65
EVAPORATOR MOTOR / RTPF (ROUND TUBE PLATE FIN)					
Motor Type	Direct Drive	Direct Drive	Direct Drive	Direct Drive	Direct Drive
External Static Pressure (ESP)	Standard	Standard	Standard	Standard	Standard
Wheel Dia. X Width	12 x 11	12 x 11	12 x 11	12 x 11	12 x 11
Indoor Nominal CFM	1860	1860	1860	1860	1860
RPM	1200 MAX	1200 MAX	1200 MAX	1200 MAX	1200 MAX
Indoor Horsepower	1.0	1.0	1.0	1.0	1.0
Filter Size (in)	20 X 25 X 2 (2)	20 X 25 X 2 (2)	20 X 25 X 2 (2)	20 X 25 X 2 (2)	20 X 25 X 2 (2)
Drain Size (NPT)	3/4	3/4	3/4	3/4	3/4
R-32 Refrigerant Charge (oz.)	63	63	63	63	63
Evaporator Coil Face Area (ft^2)	6.41	6.41	6.41	6.41	6.41
Rows Deep/ Fins per Inch	3 / 16	3 / 16	3 / 16	3 / 16	3 / 16
CONDENSER FAN / MCHX (MICROCHANNEL HEAT EXCHANGER)					
Quantity of Condenser Fan Motors	1	1	1	1	1
RPM (High/Low stage)	1122	1122	1122	1122	1122
Outdoor Horsepower	1/3	1/3	1/3	1/3	1/3
Fan Diameter/ # Fan Blades	22 / 4	22 / 4	22 / 4	22 / 4	22 / 4
Face Area (ft^2)	17.6	17.6	17.6	17.6	17.6
Rows Deep / Fins per Inch	1 / 23	1 / 23	1 / 23	1 / 23	1 / 23
COMPRESSOR (ALL SINGLE-STAGE)					
Quantity / Type / Stages	1 / Scroll / 1	1 / Scroll / 1	1 / Scroll / 1	1 / Scroll / 1	1 / Scroll / 1
Compressor RLA / LRA	23.9 / 148.0	23.9 / 148.0	15.4 / 156.4	15.4 / 156.4	15.4 / 156.4
ELECTRICAL DATA					
Voltage-Phase-Frequency	208/230-1-60	208/230-1-60	208/230-3-60	208/230-3-60	208/230-3-60
Indoor Blower FLA	6.9	6.9	6.9	6.9	6.9
Max External Static (In. W.C.)	0.8	0.8	0.8	0.8	0.8
Outdoor Fan FLA	2.0	2.0	2.0	2.0	2.0
Min. Circuit Ampacity[1]	38.7 / 38.7	38.7 / 38.7	28.1 / 28.1	28.1 / 28.1	28.1 / 28.1
Max. Overcurrent Protection (A)[2]	60 / 60	60 / 60	40 / 40	40 / 40	40 / 40
Power Supply Conduit Hole Dia. (in)	1.125	1.125	1.125	1.125	1.125
Low-Voltage Conduit Hole Dia. (in)	0.5	0.5	0.5	0.5	0.5
OPERATING WEIGHT (LBS.)					
Operating Weight (lbs)	541	558	537	550	554
SHIPPING WEIGHT (LBS.)					
Ship Weight (lbs)	611	628	607	620	624

[1] Wire size should be determined in accordance with National Electrical Codes. Extensive wire runs will require larger wire sizes.
[2] May use fuses or HACR-type circuit breakers of the same size as noted.
Note: Always check the S&R plate for electrical data on the unit being installed.

Model	DSG0604DL00001S	DSG0604DM00001S	DSG0604DH00001S	DSG0607DH00001S	DSG0601D1000001F
COOLING CAPACITY					
Total BTU/H	57,500	57,500	57,500	57,500	57,500
SEER2 / EER2 (IEER /EER for 6T)	13.7 / 11.8	13.7 / 11.8	13.7 / 11.8	13.7 / 11.8	13.7 / 11.8
AHRI Reference #	215414884	215414884	215414884	215414885	215414882
HEATING CAPACITY					
Heat Range	Low	Medium	High	High	High
No. of Burners	4	5	6	6	5
High Stage Input / Output (KBTU/H)	90.0/72.0	115.0/92.0	140.0/112.0	140.0/112.0	100.0/81.0
Low Stage Input / Output (KBTU/H)	67.5/54.0	86.3/69.0	105.0/84.0	105.0/84.0	--
Thermal Efficiency (T.E.)	80	80	80	80	--
Annual Fuel Utilization Efficiency (AFUE)	--	--	--	--	81
High Stage Temperature Rise Range (°F)	30-60	45-75	35-65	35-65	30-60
Low Stage Temperature Rise Range (°F)	25-55	40-70	35-65	35-65	--
EVAPORATOR MOTOR / RTPF (ROUND TUBE PLATE FIN)					
Motor Type	Direct Drive	Direct Drive	Direct Drive	Direct Drive	Direct Drive
External Static Pressure (ESP)	Standard	Standard	Standard	Standard	Standard
Wheel Dia. X Width	12 x 11	12 x 11	12 x 11	12 x 11	12 x 11
Indoor Nominal CFM	1860	1860	1860	1860	1860
RPM	1500 MAX	1500 MAX	1500 MAX	1500 MAX	1200 MAX
Indoor Horsepower	1.2	1.2	1.2	1.2	1.0
Filter Size (in)	20 X 25 X 2 (2)	20 X 25 X 2 (2)	20 X 25 X 2 (2)	20 X 25 X 2 (2)	20 X 25 X 2 (2)
Drain Size (NPT)	3/4	3/4	3/4	3/4	3/4
R-32 Refrigerant Charge (oz.)	63	63	63	63	63
Evaporator Coil Face Area (ft^2)	6.41	6.41	6.41	6.41	6.41
Rows Deep/ Fins per Inch	3 / 16	3 / 16	3 / 16	3 / 16	3 / 16
CONDENSER FAN / MCHX (MICROCHANNEL HEAT EXCHANGER)					
Quantity of Condenser Fan Motors	1	1	1	1	1
RPM (High/Low stage)	1050	1050	1050	1050	1122
Outdoor Horsepower	1/3	1/3	1/3	1/3	1/3
Fan Diameter/ # Fan Blades	22 / 4	22 / 4	22 / 4	22 / 4	22 / 4
Face Area (ft^2)	17.6	17.6	17.6	17.6	17.6
Rows Deep / Fins per Inch	1 / 23	1 / 23	1 / 23	1 / 23	1 / 23
COMPRESSOR (ALL SINGLE-STAGE)					
Quantity / Type / Stages	1 / Scroll / 1	1 / Scroll / 1	1 / Scroll / 1	1 / Scroll / 1	1 / Scroll / 1
Compressor RLA / LRA	7.7 / 69.0	7.7 / 69.0	7.7 / 69.0	6.4 / 47.8	23.9 / 148.0
ELECTRICAL DATA					
Voltage-Phase-Frequency	460-3-60	460-3-60	460-3-60	575-3-60	208/230-1-60
Indoor Blower FLA	2.5	2.5	2.5	2	6.9
Max External Static (In. W.C.)	0.8	0.8	0.8	0.8	0.8
Outdoor Fan FLA	0.85	0.85	0.85	0.67	2
Min. Circuit Ampacity[1]	13	13	13	10.7	38.7 / 38.7
Max. Overcurrent Protection (A)[2]	20	20	20	15	60/60
Power Supply Conduit Hole Dia. (in)	1.125	1.125	1.125	1.125	1.125
Low-Voltage Conduit Hole Dia. (in)	0.5	0.5	0.5	0.5	0.5
OPERATING WEIGHT (LBS.)					
Operating Weight (lbs)	541	554	558	558	554
SHIPPING WEIGHT (LBS.)					
Ship Weight (lbs)	611	624	628	628	624

[1] Wire size should be determined in accordance with National Electrical Codes. Extensive wire runs will require larger wire sizes.
[2] May use fuses or HACR-type circuit breakers of the same size as noted.
Note: Always check the S&R plate for electrical data on the unit being installed.

Model	DSG0601D8000001F	DSG0603D1000001F	DSG0603D8000001F	DSG0604D1000001F	DSG0604D8000001F
COOLING CAPACITY					
Total BTU/H	57,500	57,500	57,500	57,500	57,500
SEER2 / EER2 (IEER /EER for 6T)	13.7 / 11.8	13.7 / 11.8	13.7 / 11.8	13.7 / 11.8	13.7 / 11.8
AHRI Reference #	215414882	215414883	215414883	215414884	215414884
HEATING CAPACITY					
Heat Range	Medium	High	Medium	High	Medium
No. of Burners	4	5	4	5	4
High Stage Input / Output (KBTU/H)	80.0/64.8	100.0/80.0	80.0/64.0	100.0/80.0	80.0/64.0
Low Stage Input / Output (KBTU/H)	--	--	--	--	--
Thermal Efficiency (T.E.)	--	80	80	80	80
Annual Fuel Utilization Efficiency (AFUE)	81	--	--	--	--
High Stage Temperature Rise Range (°F)	20-50	30-60	20-50	30-60	20-50
Low Stage Temperature Rise Range (°F)	--	--	--	--	--
EVAPORATOR MOTOR / RTPF (ROUND TUBE PLATE FIN)					
Motor Type	Direct Drive	Direct Drive	Direct Drive	Direct Drive	Direct Drive
External Static Pressure (ESP)	Standard	Standard	Standard	Standard	Standard
Wheel Dia. X Width	12 x 11	12 x 11	12 x 11	12 x 11	12 x 11
Indoor Nominal CFM	1860	1860	1860	1860	1860
RPM	1200 MAX	1200 MAX	1200 MAX	1500 MAX	1500 MAX
Indoor Horsepower	1.0	1.0	1.0	1.2	1.2
Filter Size (in)	20 X 25 X 2 (2)	20 X 25 X 2 (2)	20 X 25 X 2 (2)	20 X 25 X 2 (2)	20 X 25 X 2 (2)
Drain Size (NPT)	3/4	3/4	3/4	3/4	3/4
R-32 Refrigerant Charge (oz.)	63	63	63	63	63
Evaporator Coil Face Area (ft^2)	6.41	6.41	6.41	6.41	6.41
Rows Deep/ Fins per Inch	3 / 16	3 / 16	3 / 16	3 / 16	3 / 16
CONDENSER FAN / MCHX (MICROCHANNEL HEAT EXCHANGER)					
Quantity of Condenser Fan Motors	1	1	1	1	1
RPM (High/Low stage)	1122	1122	1122	1050	1050
Outdoor Horsepower	1/3	1/3	1/3	1/3	1/3
Fan Diameter/ # Fan Blades	22 / 4	22 / 4	22 / 4	22 / 4	22 / 4
Face Area (ft^2)	17.6	17.6	17.6	17.6	17.6
Rows Deep / Fins per Inch	1 / 23	1 / 23	1 / 23	1 / 23	1 / 23
COMPRESSOR (ALL SINGLE-STAGE)					
Quantity / Type / Stages	1 / Scroll / 1	1 / Scroll / 1	1 / Scroll / 1	1 / Scroll / 1	1 / Scroll / 1
Compressor RLA / LRA	23.9 / 148.0	15.4 / 156.4	15.4 / 156.4	7.7 / 69.0	7.7 / 69.0
ELECTRICAL DATA					
Voltage-Phase-Frequency	208/230-1-60	208/230-3-60	208/230-3-60	460-3-60	460-3-60
Indoor Blower FLA	6.9	6.9	6.9	2.5	2.5
Max External Static (In. W.C.)	0.8	0.8	0.8	0.8	0.8
Outdoor Fan FLA	2	2	2	0.85	0.85
Min. Circuit Ampacity[1]	38.7 / 38.7	28.1/28.1	28.1/28.1	13	13
Max. Overcurrent Protection (A)[2]	60/60	40/40	40/40	20	20
Power Supply Conduit Hole Dia. (in)	1.125	1.125	1.125	1.125	1.125
Low-Voltage Conduit Hole Dia. (in)	0.5	0.5	0.5	0.5	0.5
OPERATING WEIGHT (LBS.)					
Operating Weight (lbs)	541	550	537	554	541
SHIPPING WEIGHT (LBS.)					
Ship Weight (lbs)	611	620	607	624	611

[1] Wire size should be determined in accordance with National Electrical Codes. Extensive wire runs will require larger wire sizes.
[2] May use fuses or HACR-type circuit breakers of the same size as noted.
Note: Always check the S&R plate for electrical data on the unit being installed.

Model	DSG0723DL00001S	DSG0723DM00001S	DSG0723DH00001S	DSG0724DL00001S	DSG0724DM00001S
COOLING CAPACITY					
Total BTU/H	69,000	69,000	69,000	69,000	69,000
SEER2 / EER2 (IEER /EER for 6T)	16.7 / 11.8	16.7 / 11.8	16.7 / 11.8	16.7 / 11.8	16.7 / 11.8
AHRI Reference #	215415677	215415677	215415677	215415678	215415678
HEATING CAPACITY					
Heat Range	Low	Medium	High	Low	Medium
No. of Burners	4	5	6	4	5
High Stage Input / Output (KBTU/H)	90.0/72.0	115.0/92.0	140.0/112.0	90.0/72.0	115.0/92.0
Low Stage Input / Output (KBTU/H)	67.5/54.0	86.3/69.0	105.0/84.0	67.5/54.0	86.3/69.0
Thermal Efficiency (T.E.)	80	80	80	80	80
Annual Fuel Utilization Efficiency (AFUE)	--	--	--	--	--
High Stage Temperature Rise Range (°F)	25-55	25-55	35-65	25-55	25-55
Low Stage Temperature Rise Range (°F)	20-50	20-50	30-60	20-50	20-50
EVAPORATOR MOTOR / RTPF (ROUND TUBE PLATE FIN)					
Motor Type	Direct Drive	Direct Drive	Direct Drive	Direct Drive	Direct Drive
External Static Pressure (ESP)	Standard	Standard	Standard	Standard	Standard
Wheel Dia. X Width	12 x 11	12 x 11	12 x 11	12 x 11	12 x 11
Indoor Nominal CFM	2100	2100	2100	2100	2100
RPM	1500 MAX	1500 MAX	1500 MAX	1500 MAX	1500 MAX
Indoor Horsepower	1.2	1.2	1.2	1.2	1.2
Filter Size (in)	14 X 20 X 2, 20 X 20 X 2	14 X 20 X 2, 20 X 20 X 2	14 X 20 X 2, 20 X 20 X 2	14 X 20 X 2, 20 X 20 X 2	14 X 20 X 2, 20 X 20 X 2
Drain Size (NPT)	3/4	3/4	3/4	3/4	3/4
R-32 Refrigerant Charge (oz.)	83	83	83	83	83
Evaporator Coil Face Area (ft^2)	9.16	9.16	9.16	9.16	9.16
Rows Deep/ Fins per Inch	3 / 16	3 / 16	3 / 16	3 / 16	3 / 16
CONDENSER FAN / MCHX (MICROCHANNEL HEAT EXCHANGER)					
Quantity of Condenser Fan Motors	1	1	1	1	1
RPM (High/Low stage)	1122	1122	1122	1050	1050
Outdoor Horsepower	1/3	1/3	1/3	1/3	1/3
Fan Diameter/ # Fan Blades	22 / 4	22 / 4	22 / 4	22 / 4	22 / 4
Face Area (ft^2)	17.2	17.2	17.2	17.2	17.2
Rows Deep / Fins per Inch	1 / 23	1 / 23	1 / 23	1 / 23	1 / 23
COMPRESSOR (ALL SINGLE-STAGE)					
Quantity / Type / Stages	1 / Scroll / 2	1 / Scroll / 2	1 / Scroll / 2	1 / Scroll / 2	1 / Scroll / 2
Compressor RLA / LRA	16.1 / 155	16.1 / 155	16.1 / 155	7.0 / 70.8	7.0 / 70.8
ELECTRICAL DATA					
Voltage-Phase-Frequency	208/230-3-60	208/230-3-60	208/230-3-60	460-3-60	460-3-60
Indoor Blower FLA	5	5	5	2.5	2.5
Max External Static (In. W.C.)	0.8	0.8	0.8	0.8	0.8
Outdoor Fan FLA	2	2	2	0.85	0.85
Min. Circuit Ampacity[1]	27.2 / 27.2	27.2 / 27.2	27.2 / 27.2	12.2	12.2
Max. Overcurrent Protection (A)[2]	40 / 40	40 / 40	40 / 40	20	20
Power Supply Conduit Hole Dia. (in)	1.125	1.125	1.125	1.125	1.125
Low-Voltage Conduit Hole Dia. (in)	0.5	0.5	0.5	0.5	0.5
OPERATING WEIGHT (LBS.)					
Operating Weight (lbs)	610	618	626	610	618
SHIPPING WEIGHT (LBS.)					
Ship Weight (lbs)	680	688	696	680	688

[1] Wire size should be determined in accordance with National Electrical Codes. Extensive wire runs will require larger wire sizes.
[2] May use fuses or HACR-type circuit breakers of the same size as noted.
Note: Always check the S&R plate for electrical data on the unit being installed.

Model	DSG0724DH00001S	DSG0727DL00001S	DSG0727DM00001S	DSG0727DH00001S	DSG0723WL00001F
COOLING CAPACITY					
Total BTU/H	69,000	69,000	69,000	69,000	69,000
SEER2 / EER2 (IEER /EER for 6T)	16.7 / 11.8	16.7 / 11.8	16.7 / 11.8	16.7 / 11.8	16.7 / 11.8
AHRI Reference #	215415678	215415679	215415679	215415679	215415677
HEATING CAPACITY					
Heat Range	High	Low	Medium	High	Low
No. of Burners	6	4	5	6	4
High Stage Input / Output (KBTU/H)	140.0/112.0	90.0/72.0	115.0/92.0	140.0/112.0	90.0/72.0
Low Stage Input / Output (KBTU/H)	105.0/84.0	67.5/54.0	86.3/69.0	105.0/84.0	67.5/54.0
Thermal Efficiency (T.E.)	80	80	80	80	80
Annual Fuel Utilization Efficiency (AFUE)	--	--	--	--	--
High Stage Temperature Rise Range (°F)	35-65	25-55	25-55	35-65	25-55
Low Stage Temperature Rise Range (°F)	30-60	20-50	20-50	30-60	20-50
EVAPORATOR MOTOR / RTPF (ROUND TUBE PLATE FIN)					
Motor Type	Direct Drive	Direct Drive	Direct Drive	Direct Drive	Direct Drive
External Static Pressure (ESP)	Standard	Standard	Standard	Standard	High
Wheel Dia. X Width	12 x 11	12 x 11	12 x 11	12 x 11	12 x 11
Indoor Nominal CFM	2100	2100	2100	2100	2100
RPM	1500 MAX	1500 MAX	1500 MAX	1500 MAX	1500 MAX
Indoor Horsepower	1.2	1.2	1.2	1.2	2.3
Filter Size (in)	14 X 20 X 2, 20 X 20 X 2	14 X 20 X 2, 20 X 20 X 2	14 X 20 X 2, 20 X 20 X 2	14 X 20 X 2, 20 X 20 X 2	14 X 20 X 2, 20 X 20 X 2
Drain Size (NPT)	3/4	3/4	3/4	3/4	3/4
R-32 Refrigerant Charge (oz.)	83	83	83	83	83
Evaporator Coil Face Area (ft^2)	9.16	9.16	9.16	9.16	9.16
Rows Deep/ Fins per Inch	3 / 16	3 / 16	3 / 16	3 / 16	3 / 16
CONDENSER FAN / MCHX (MICROCHANNEL HEAT EXCHANGER)					
Quantity of Condenser Fan Motors	1	1	1	1	1
RPM (High/Low stage)	1050	1050	1050	1050	1122
Outdoor Horsepower	1/3	1/3	1/3	1/3	1/3
Fan Diameter/ # Fan Blades	22 / 4	22 / 4	22 / 4	22 / 4	22 / 4
Face Area (ft^2)	17.2	17.2	17.2	17.2	17.2
Rows Deep / Fins per Inch	1 / 23	1 / 23	1 / 23	1 / 23	1 / 23
COMPRESSOR (ALL SINGLE-STAGE)					
Quantity / Type / Stages	1 / Scroll / 2	1 / Scroll / 2	1 / Scroll / 2	1 / Scroll / 2	1 / Scroll / 2
Compressor RLA / LRA	7.0 / 70.8	6.0 / 58.2	6.0 / 58.2	6.0 / 58.2	16.1 / 155
ELECTRICAL DATA					
Voltage-Phase-Frequency	460-3-60	575-3-60	575-3-60	575-3-60	208/230-3-60
Indoor Blower FLA	2.5	2	2	2	7.7
Max External Static (In. W.C.)	0.8	0.8	0.8	0.8	1.8
Outdoor Fan FLA	0.85	0.67	0.67	0.67	2
Min. Circuit Ampacity[1]	12.2	10.2	10.2	10.2	29.9 / 29.9
Max. Overcurrent Protection (A)[2]	20	15	15	15	40 / 40
Power Supply Conduit Hole Dia. (in)	1.125	1.125	1.125	1.125	1.125
Low-Voltage Conduit Hole Dia. (in)	0.5	0.5	0.5	0.5	0.5
OPERATING WEIGHT (LBS.)					
Operating Weight (lbs)	626	610	618	626	614
SHIPPING WEIGHT (LBS.)					
Ship Weight (lbs)	696	680	688	696	684

[1] Wire size should be determined in accordance with National Electrical Codes. Extensive wire runs will require larger wire sizes.
[2] May use fuses or HACR-type circuit breakers of the same size as noted.
Note: Always check the S&R plate for electrical data on the unit being installed.

Model	DSG0723WM00001F	DSG0723WH00001F	DSG0724WL00001F	DSG0724WM00001F	DSG0724WH00001F
COOLING CAPACITY					
Total BTU/H	69,000	69,000	69,000	69,000	69,000
SEER2 / EER2 (IEER /EER for 6T)	16.7 / 11.8	16.7 / 11.8	16.7 / 11.8	16.7 / 11.8	15.5 / 11.2
AHRI Reference #	215415677	215415677	215415678	215415678	215415678
HEATING CAPACITY					
Heat Range	Medium	High	Low	Medium	High
No. of Burners	5	6	4	5	6
High Stage Input / Output (KBTU/H)	115.0/92.0	140.0/112.0	90.0/72.0	115.0/92.0	140.0/112.0
Low Stage Input / Output (KBTU/H)	86.3/69.0	105.0/84.0	67.5/54.0	86.3/69.0	105.0/84.0
Thermal Efficiency (T.E.)	80	80	80	80	80
Annual Fuel Utilization Efficiency (AFUE)	--	--	--	--	--
High Stage Temperature Rise Range (°F)	25-55	35-65	25-55	25-55	35-65
Low Stage Temperature Rise Range (°F)	20-50	30-60	20-50	20-50	30-60
EVAPORATOR MOTOR / RTPF (ROUND TUBE PLATE FIN)					
Motor Type	Direct Drive	Direct Drive	Direct Drive	Direct Drive	Direct Drive
External Static Pressure (ESP)	High	High	High	High	High
Wheel Dia. X Width	12 x 11	12 x 11	12 x 11	12 x 11	12 x 11
Indoor Nominal CFM	2100	2100	2100	2100	2100
RPM	1500 MAX	1500 MAX	1500 MAX	1500 MAX	1500 MAX
Indoor Horsepower	2.3	2.3	2.3	2.3	2.3
Filter Size (in)	14 X 20 X 2, 20 X 20 X 2	14 X 20 X 2, 20 X 20 X 2	14 X 20 X 2, 20 X 20 X 2	14 X 20 X 2, 20 X 20 X 2	14 X 20 X 2, 20 X 20 X 2
Drain Size (NPT)	3/4	3/4	3/4	3/4	3/4
R-32 Refrigerant Charge (oz.)	83	83	83	83	83
Evaporator Coil Face Area (ft^2)	9.16	9.16	9.16	9.16	9.16
Rows Deep/ Fins per Inch	3 / 16	3 / 16	3 / 16	3 / 16	3 / 16
CONDENSER FAN / MCHX (MICROCHANNEL HEAT EXCHANGER)					
Quantity of Condenser Fan Motors	1	1	1	1	1
RPM (High/Low stage)	1122	1122	1050	1050	1050
Outdoor Horsepower	1/3	1/3	1/3	1/3	1/3
Fan Diameter/ # Fan Blades	22 / 4	22 / 4	22 / 4	22 / 4	22 / 4
Face Area (ft^2)	17.2	17.2	17.2	17.2	17.2
Rows Deep / Fins per Inch	1 / 23	1 / 23	1 / 23	1 / 23	1 / 23
COMPRESSOR (ALL SINGLE-STAGE)					
Quantity / Type / Stages	1 / Scroll / 2	1 / Scroll / 2	1 / Scroll / 2	1 / Scroll / 2	1 / Scroll / 2
Compressor RLA / LRA	16.1 / 155	16.1 / 155	7 / 70.8	7 / 70.8	7 / 70.8
ELECTRICAL DATA					
Voltage-Phase-Frequency	208/230-3-60	208/230-3-60	460-3-60	460-3-60	460-3-60
Indoor Blower FLA	7.7	7.7	4.5	4.5	4.5
Max External Static (In. W.C.)	1.8	1.8	1.8	1.8	1.8
Outdoor Fan FLA	2	2	0.85	0.85	0.85
Min. Circuit Ampacity[1]	29.9 / 29.9	29.9 / 29.9	14.2	14.2	14.2
Max. Overcurrent Protection (A)[2]	40 / 40	40 / 40	20	20	20
Power Supply Conduit Hole Dia. (in)	1.125	1.125	1.125	1.125	1.125
Low-Voltage Conduit Hole Dia. (in)	0.5	0.5	0.5	0.5	0.5
OPERATING WEIGHT (LBS.)					
Operating Weight (lbs)	622	630	614	622	630
SHIPPING WEIGHT (LBS.)					
Ship Weight (lbs)	692	700	684	692	700

[1] Wire size should be determined in accordance with National Electrical Codes. Extensive wire runs will require larger wire sizes.
[2] May use fuses or HACR-type circuit breakers of the same size as noted.
Note: Always check the S&R plate for electrical data on the unit being installed.

Model	DSG0727WL00001F	DSG0727WM00001F	DSG0727WH00001F
COOLING CAPACITY			
Total BTU/H	69,000	69,000	69,000
SEER2 / EER2 (IEER /EER for 6T)	16.7 / 11.8	16.7 / 11.8	16.7 / 11.8
AHRI Reference #	215415679	215415679	215415679
HEATING CAPACITY			
Heat Range	Low	Medium	High
No. of Burners	4	5	6
High Stage Input / Output (KBTU/H)	90.0/72.0	115.0/92.0	140.0/112.0
Low Stage Input / Output (KBTU/H)	67.5/54.0	86.3/69.0	105.0/84.0
Thermal Efficiency (T.E.)	80	80	80
Annual Fuel Utilization Efficiency (AFUE)	--	--	--
High Stage Temperature Rise Range (°F)	25-55	25-55	35-65
Low Stage Temperature Rise Range (°F)	20-50	20-50	30-60
EVAPORATOR MOTOR / RTPF (ROUND TUBE PLATE FIN)			
Motor Type	Direct Drive	Direct Drive	Direct Drive
External Static Pressure (ESP)	High	High	High
Wheel Dia. X Width	12 x 11	12 x 11	12 x 11
Indoor Nominal CFM	2100	2100	2100
RPM	1500 MAX	1500 MAX	1500 MAX
Indoor Horsepower	2.3	2.3	2.3
Filter Size (in)	14 X 20 X 2, 20 X 20 X 2	14 X 20 X 2, 20 X 20 X 2	14 X 20 X 2, 20 X 20 X 2
Drain Size (NPT)	3/4	3/4	3/4
R-32 Refrigerant Charge (oz.)	83	83	83
Evaporator Coil Face Area (ft^2)	9.16	9.16	9.16
Rows Deep/ Fins per Inch	3 / 16	3 / 16	3 / 16
CONDENSER FAN / MCHX (MICROCHANNEL HEAT EXCHANGER)			
Quantity of Condenser Fan Motors	1	1	1
RPM (High/Low stage)	1050	1050	1050
Outdoor Horsepower	1/3	1/3	1/3
Fan Diameter/ # Fan Blades	22 / 4	22 / 4	22 / 4
Face Area (ft^2)	17.2	17.2	17.2
Rows Deep / Fins per Inch	1 / 23	1 / 23	1 / 23
COMPRESSOR (ALL SINGLE-STAGE)			
Quantity / Type / Stages	1 / Scroll / 2	1 / Scroll / 2	1 / Scroll / 2
Compressor RLA / LRA	6 / 58.2	6 / 58.2	6 / 58.2
ELECTRICAL DATA			
Voltage-Phase-Frequency	575-3-60	575-3-60	575-3-60
Indoor Blower FLA	3.8	3.8	3.8
Max External Static (In. W.C.)	1.8	1.8	1.8
Outdoor Fan FLA	0.67	0.67	0.67
Min. Circuit Ampacity[1]	12	12	12
Max. Overcurrent Protection (A)[2]	15	15	15
Power Supply Conduit Hole Dia. (in)	1.125	1.125	1.125
Low-Voltage Conduit Hole Dia. (in)	0.5	0.5	0.5
OPERATING WEIGHT (LBS.)			
Operating Weight (lbs)	614	622	630
SHIPPING WEIGHT (LBS.)			
Ship Weight (lbs)	684	692	700

[1] Wire size should be determined in accordance with National Electrical Codes. Extensive wire runs will require larger wire sizes.
[2] May use fuses or HACR-type circuit breakers of the same size as noted.
Note: Always check the S&R plate for electrical data on the unit being installed.

Coil Dimensions

Model	Tons	Fin height in.	Fin length in.
DSG	3	24.248	38.068
DSG	4	24.248	38.068
DSG	5	24.248	38.068
DSG	6	34.640	38.068

AHRI Ratings

MODEL	CAPACITY	EER2	SEER2	EER	IEER
DSG036	35,000	12.0	14.0	N/A	N/A
DSG048	46,000	11.8	13.7	N/A	N/A
DSG060	57,500	11.8	13.7	N/A	N/A
DSG072	69,000	N/A	N/A	11.8	16.7

Sound Data

Static Pressure	3 TON SOUND (DB) AT 60 HZ										
	INDOOR CFM	COMPONET	A-WEIGHTED	63	125	250	500	1000	2000	4000	8000
0.8	1,160	Discharge	67	83.1	78.4	65.6	60.2	58.3	55.4	54.8	48.2
		Inlet	62	82.4	75.9	59.4	54.9	52.3	47.3	45.7	40.8
1.8		Discharge	77	87.3	86.5	76.4	71.3	70.6	65.1	65.5	62.1
		Inlet	69	83.7	81.6	69.5	64.5	62.0	57.6	57.8	55.8
N/A	N/A	Outdoor	72	N/A	60.2	63.4	65.4	66.0	65.2	62.0	57.0

Static Pressure	4 TON SOUND (DB) AT 60 HZ										
	INDOOR CFM	COMPONET	A-WEIGHTED	63	125	250	500	1000	2000	4000	8000
0.8	1,570	Discharge	73	98.0	85.8	70.3	64.4	62.4	58.0	57.8	52.5
		Inlet	70	90.2	82.4	67.8	60.7	56.9	51.3	49.7	45.8
1.8		Discharge	77	97.9	84.5	76.6	72.1	69.0	65.3	65.6	61.8
		Inlet	70	89.1	80.2	71.5	64.5	62.2	57.7	57.7	54.8
N/A	N/A	Outdoor	76	N/A	63.0	66.6	69.5	71.9	67.3	61.7	52.6

Static Pressure	5 TON SOUND (DB) AT 60 HZ										
	INDOOR CFM	COMPONET	A-WEIGHTED	63	125	250	500	1000	2000	4000	8000
0.8	1,820	Discharge	75	98.4	83.2	76.1	69.8	67.2	63.2	63.4	59.4
		Inlet	68	84.1	78.6	74.1	62.2	60.0	55.2	55.2	51.9
1.8		Discharge	80	92.8	87.1	81.9	76.0	72.4	68.2	68.2	65.6
		Inlet	73	87.9	83.9	73.3	67.3	64.8	61.2	60.8	58.0
N/A	N/A	Outdoor	77	N/A	66.6	65.1	70.4	72.0	69.7	66.6	57.4

Static Pressure	6 TON SOUND (DB) AT 60 HZ										
	INDOOR CFM	COMPONET	A-WEIGHTED	63	125	250	500	1000	2000	4000	8000
0.8	2,100	Discharge	64	82.1	74.4	63.4	60.3	55.7	53.4	52.6	47.4
		Inlet	60	75.7	72.8	59.6	56.5	53.5	49.6	43.6	40.5
1.8		Discharge	76	92.9	86.7	76.9	70.7	67.0	63.5	63.8	59.7
		Inlet	70	85.5	83.4	69.5	63.8	61.6	56.0	55.0	52.1
N/A	N/A	Outdoor	79	N/A	62.9	67.5	71.8	74.9	71.8	66.9	58.6

Notes:

[1] Outdoor sound data is measured in accordance with AHRI standard 270.

[2] Discharge and Inlet sound data measured in accordanced with AHRI standard 260.

[3] Measurements are expressed in terms of sound power. Do not compare these values to sound pressure values because sound pressure depends on specific environment factors which normally do not match individual applications. Sound power values are independent of the environment and therefore more accurate.

[4] A-weighted sound ratings filter out high and very low frequencies, to better approximate the response of "average" human ear. A-weighted measurements for Daikin units are taken in accordance with AHRI standard 270.

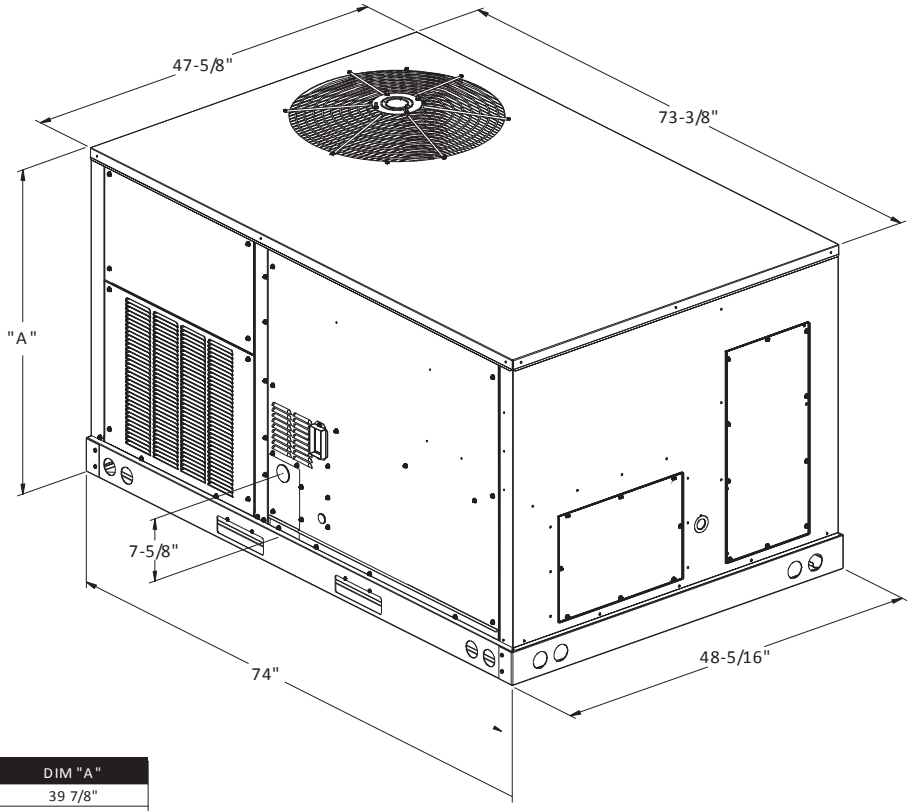

MODEL SIZE	DIM "A"
3 ton Gas	39 7/8"
4 ton Gas	39 7/8"
5 ton Gas	39 7/8"
6 ton Gas	43 1/2"

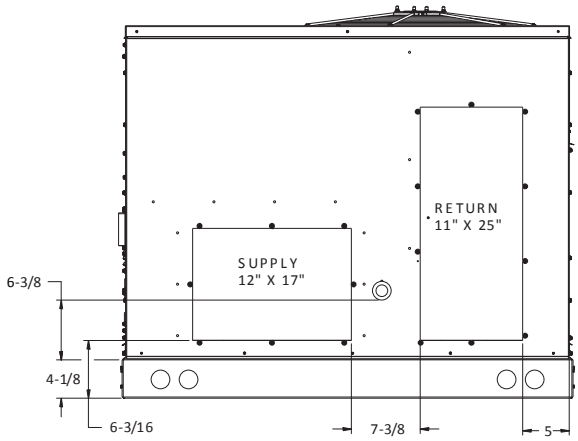

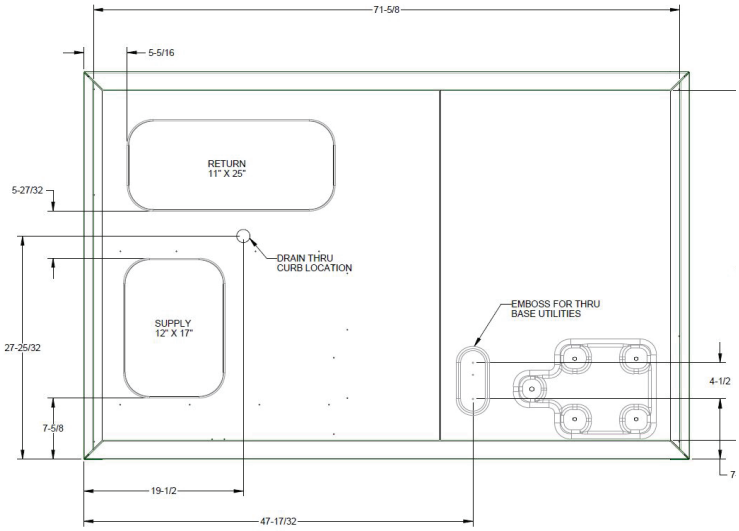

BOTTOM VIEW

			Outdoor Ambient Temperature																							
			65				75				85				95				105				115			
			Entering Indoor Wet Bulb Temperature																							
IDB	Airflow	ID WB	59	63	67	71	59	63	67	71	59	63	67	71	59	63	67	71	59	63	67	71	59	63	67	71
70	900	MBh	35.1	35.6	36.7	-	34.8	35.3	36.4	-	33.9	34.4	35.4	-	32.3	32.8	33.8	-	30.3	30.8	31.9	-	28.5	29.0	30.1	-
		S/T	0.56	0.50	0.40	-	0.56	0.51	0.40	-	0.58	0.53	0.42	-	0.61	0.54	0.43	-	0.64	0.57	0.45	-	0.71	0.64	0.51	-
		ΔT	19.80	18.06	14.82	-	19.75	18.02	14.77	-	20.00	18.26	15.02	-	19.73	18.00	14.75	-	19.50	17.77	14.52	-	20.59	18.85	15.61	-
		kW	1.99	1.99	1.99	-	2.24	2.24	2.24	-	2.52	2.52	2.52	-	2.83	2.83	2.82	-	3.17	3.16	3.16	-	3.56	3.56	3.56	-
		Amps	7.46	7.45	7.43	-	8.55	8.54	8.52	-	9.76	9.76	9.74	-	11.08	11.07	11.05	-	12.55	12.54	12.52	-	14.28	14.27	14.25	-
		Hi PR	258	259	261	-	299	300	302	-	342	343	345	-	388	389	391	-	438	439	441	-	491	493	494	-
		Lo PR	118	119	122	-	125	126	129	-	131	133	136	-	137	138	141	-	142	143	146	-	141	146	153	-
	1160	MBh	35.9	36.4	37.5	-	35.6	36.1	37.2	-	34.7	35.2	36.2	-	33.1	33.6	34.6	-	31.1	31.6	32.7	-	29.3	29.8	30.9	-
		S/T	0.63	0.56	0.43	-	0.63	0.56	0.44	-	0.66	0.59	0.46	-	0.68	0.61	0.47	-	0.72	0.63	0.49	-	0.81	0.72	0.56	-
		ΔT	17.73	16.00	12.75	-	17.68	15.95	12.70	-	17.93	16.19	12.95	-	17.67	15.93	12.69	-	17.44	15.70	12.45	-	18.52	16.79	13.54	-
		kW	2.02	2.02	2.01	-	2.27	2.27	2.26	-	2.55	2.55	2.54	-	2.85	2.85	2.85	-	3.19	3.19	3.19	-	3.59	3.59	3.58	-
		Amps	7.57	7.56	7.54	-	8.66	8.65	8.63	-	9.88	9.87	9.85	-	11.19	11.18	11.16	-	12.66	12.65	12.64	-	14.39	14.38	14.36	-
		Hi PR	262	263	265	-	303	304	306	-	346	347	349	-	392	394	395	-	442	443	445	-	496	497	499	-
		Lo PR	121	122	125	-	128	129	132	-	134	136	139	-	140	141	144	-	145	146	149	-	146	152	156	-
	1350	MBh	36.7	37.2	38.2	-	36.4	36.9	37.9	-	35.4	35.9	37.0	-	33.8	34.3	35.4	-	31.9	32.4	33.4	-	30.1	30.6	31.6	-
		S/T	0.67	0.59	0.45	-	0.68	0.60	0.45	-	0.70	0.62	0.47	-	0.73	0.64	0.48	-	0.76	0.67	0.50	-	0.86	0.76	0.58	-
		ΔT	16.60	14.86	11.62	-	16.55	14.81	11.57	-	16.79	15.06	11.81	-	16.53	14.80	11.55	-	16.30	14.56	11.32	-	17.39	15.65	12.41	-
		kW	2.03	2.03	2.03	-	2.28	2.28	2.28	-	2.56	2.56	2.56	-	2.87	2.87	2.86	-	3.21	3.20	3.20	-	3.60	3.60	3.60	-
		Amps	7.63	7.62	7.60	-	8.72	8.71	8.69	-	9.94	9.93	9.91	-	11.25	11.24	11.23	-	12.72	12.72	12.70	-	14.45	14.44	14.42	-
		Hi PR	265	266	268	-	306	307	309	-	349	350	352	-	395	396	398	-	445	446	448	-	498	499	501	-
		Lo PR	123	125	128	-	131	132	135	-	137	138	141	-	142	144	147	-	148	149	152	-	149	154	159	-
75	900	MBh	35.3	35.8	36.9	38.5	35.0	35.5	36.6	38.2	34.1	34.6	35.6	37.3	32.5	33.0	34.0	35.7	30.5	31.0	32.1	33.7	28.7	29.2	30.3	31.9
		S/T	0.66	0.60	0.50	0.4	0.67	0.61	0.50	0.4	0.69	0.63	0.52	0.4	0.72	0.66	0.54	0.4	0.76	0.69	0.57	0.4	0.84	0.77	0.64	0.5
		ΔT	23.62	21.88	18.64	15.3	23.57	21.83	18.59	15.2	23.82	22.08	18.84	15.5	23.55	21.82	18.57	15.2	23.32	21.58	18.34	15.0	24.41	22.67	19.43	16.1
		kW	1.99	1.99	1.99	2.0	2.24	2.24	2.24	2.3	2.52	2.52	2.52	2.5	2.83	2.82	2.82	2.8	3.16	3.16	3.16	3.2	3.56	3.56	3.56	3.6
		Amps	7.45	7.44	7.42	7.5	8.54	8.53	8.51	8.6	9.76	9.75	9.73	9.8	11.07	11.06	11.05	11.1	12.54	12.54	12.52	12.6	14.27	14.26	14.24	14.3
		Hi PR	258	259	261	265.7	299	300	302	306.8	342	343	345	349.7	389	390	391	396.0	438	440	441	445.9	492	493	495	499.1
		Lo PR	118	119	122	127.3	125	126	129	134.5	131	133	136	140.9	137	138	141	146.2	139	143	146	151.5	139	149	153	158.1
	1160	MBh	36.1	36.6	37.7	39.3	35.8	36.3	37.3	39.0	34.8	35.4	36.4	38.0	33.2	**33.8**	34.8	36.4	31.3	31.8	32.9	34.5	29.5	30.0	31.1	32.7
		S/T	0.76	0.69	0.56	0.4	0.77	0.70	0.56	0.4	0.80	0.72	0.59	0.4	0.82	**0.75**	0.60	0.5	0.87	0.78	0.63	0.5	0.97	0.88	0.71	0.5
		ΔT	21.55	19.81	16.57	13.2	21.50	19.77	16.52	13.2	21.75	20.01	16.77	13.4	21.49	**19.75**	16.51	13.1	21.25	19.52	16.27	12.9	22.34	20.60	17.36	14.0
		kW	2.02	2.02	2.01	2.0	2.27	2.27	2.26	2.3	2.55	2.55	2.54	2.6	2.85	**2.85**	2.85	2.9	3.19	3.19	3.18	3.2	3.59	3.59	3.58	3.6
		Amps	7.56	7.55	7.53	7.6	8.65	8.64	8.62	8.7	9.87	9.86	9.84	9.9	11.19	**11.18**	11.16	11.2	12.66	12.65	12.63	12.7	14.38	14.37	14.36	14.4
		Hi PR	262	264	265	269.9	303	305	306	310.9	346	348	349	353.9	393	**394**	396	400.1	443	444	445	450.0	496	497	499	503.3
		Lo PR	121	122	125	130.3	128	129	133	137.6	134	136	139	143.9	140	**141**	144	149.3	138	146	149	154.6	139	153	156	161.1
	1350	MBh	36.9	37.4	38.4	40.0	36.5	37.0	38.1	39.7	35.6	36.1	37.2	38.8	34.0	34.5	35.6	37.2	32.1	32.6	33.6	35.2	30.3	30.8	31.8	33.5
		S/T	0.82	0.74	0.60	0.4	0.83	0.75	0.60	0.4	0.86	0.78	0.62	0.5	0.89	0.80	0.64	0.5	0.93	0.84	0.67	0.5	1.00	0.94	0.76	0.6
		ΔT	20.42	18.68	15.44	12.1	20.37	18.63	15.39	12.0	20.61	18.88	15.63	12.3	20.35	18.61	15.37	12.0	20.12	18.38	15.14	11.8	20.38	19.47	16.23	12.9
		kW	2.03	2.03	2.03	2.0	2.28	2.28	2.28	2.3	2.56	2.56	2.56	2.6	2.87	2.86	2.86	2.9	3.20	3.20	3.20	3.2	3.60	3.60	3.59	3.6
		Amps	7.62	7.61	7.59	7.7	8.71	8.70	8.68	8.8	9.93	9.92	9.90	10.0	11.25	11.24	11.22	11.3	12.72	12.71	12.69	12.8	14.44	14.43	14.42	14.5
		Hi PR	265	266	268	272.7	306	307	309	313.7	349	350	352	356.7	395	397	398	402.9	445	446	448	452.8	499	500	502	506.1
		Lo PR	123	125	128	132.9	131	132	135	140.2	137	138	141	146.5	140	144	147	151.9	138	149	152	157.1	139	156	159	163.7

IDB: Entering Indoor Dry Bulb Temperature

Shaded area reflects AHRI (TVA) conditions

W = Total system power

High and low pressures are measured at the liquid and suction access fittings.

Amps: Unit amps (comp.+ evaporator + condenser fan motors)

Design Subcooling, 16 - 19 °F @ the liquid access fitting connection ARI 95 test conditions. Design Superheat 8 - 12°F @ the compressor suction access fitting connection.

			Outdoor Ambient Temperature																							
			65				75				85				95				105				115			
			Entering Indoor Wet Bulb Temperature																							
IDB	Airflow	ID WB	59	63	67	71	59	63	67	71	59	63	67	71	59	63	67	71	59	63	67	71	59	63	67	71
80	900	MBh	35.5	36.0	37.1	38.7	35.2	35.7	36.7	38.4	34.2	34.7	35.8	37.4	32.6	33.1	34.2	35.8	30.7	31.2	32.3	33.9	28.9	29.4	30.5	32.1
		S/T	0.77	0.71	0.60	0.5	0.77	0.71	0.60	0.5	0.80	0.74	0.63	0.5	0.83	0.77	0.65	0.5	0.88	0.81	0.68	0.6	0.97	0.89	0.76	0.6
		ΔT	27.46	25.73	22.48	19.1	27.42	25.68	22.44	19.1	27.66	25.92	22.68	19.3	27.40	25.66	22.42	19.1	27.17	25.43	22.19	18.8	28.25	26.52	23.27	19.9
		kW	1.99	1.99	1.99	2.0	2.24	2.24	2.24	2.3	2.52	2.52	2.52	2.5	2.83	2.83	2.82	2.8	3.17	3.16	3.16	3.2	3.56	3.56	3.56	3.6
		Amps	7.46	7.45	7.43	7.5	8.55	8.54	8.52	8.6	9.76	9.75	9.74	9.8	11.08	11.07	11.05	11.1	12.55	12.54	12.52	12.6	14.28	14.27	14.25	14.3
		Hi PR	259	260	262	266.2	300	301	303	307.2	343	344	346	350.2	389	390	392	396.5	439	440	442	446.4	492	493	495	499.6
		Lo PR	118	120	123	127.8	125	127	130	135.0	128	133	136	141.4	128	139	142	146.7	128	144	147	152.0	128	150	154	158.6
	1160	MBh	36.3	36.8	37.8	39.5	36.0	36.5	37.5	39.2	35.0	35.5	36.6	38.2	33.4	33.9	**35.0**	36.6	31.5	32.0	33.0	34.7	29.7	30.2	31.3	32.9
		S/T	0.89	0.82	0.69	0.6	0.90	0.83	0.69	0.6	0.93	0.86	0.72	0.6	0.97	0.89	**0.74**	0.6	1.00	0.93	0.78	0.6	1.00	1.00	0.87	0.7
		ΔT	25.40	23.66	20.42	17.1	25.35	23.61	20.37	17.0	25.59	23.86	20.61	17.3	25.33	23.59	**20.35**	17.0	24.67	23.36	20.12	16.8	23.27	23.66	21.21	17.8
		kW	2.02	2.02	2.01	2.0	2.27	2.27	2.26	2.3	2.55	2.55	2.54	2.6	2.85	2.85	**2.85**	2.9	3.19	3.19	3.19	3.2	3.59	3.59	3.58	3.6
		Amps	7.57	7.56	7.54	7.6	8.66	8.65	8.63	8.7	9.87	9.87	9.85	9.9	11.19	11.18	**11.16**	11.2	12.66	12.65	12.63	12.7	14.39	14.38	14.36	14.4
		Hi PR	263	264	266	270.3	304	305	307	311.4	347	348	350	354.3	393	394	**396**	400.6	443	444	446	450.5	496	497	499	503.7
		Lo PR	121	123	126	130.9	127	130	133	138.1	127	136	139	144.5	127	142	**145**	149.8	127	147	150	155.1	152	152	157	161.7
	1350	MBh	37.0	37.5	38.6	40.2	36.7	37.2	38.3	39.9	35.8	36.3	37.4	39.0	34.2	34.7	35.8	37.4	32.2	32.7	33.8	35.4	30.5	31.0	32.0	33.6
		S/T	0.97	0.89	0.74	0.6	0.98	0.90	0.75	0.6	1.00	0.93	0.77	0.6	1.00	0.96	0.80	0.6	1.00	1.00	0.83	0.7	1.00	1.00	0.93	0.7
		ΔT	24.26	22.52	19.28	15.9	24.21	22.48	19.23	15.9	24.10	22.72	19.48	16.1	23.02	22.46	19.22	15.9	21.71	22.05	18.98	15.6	20.51	20.84	20.07	16.7
		kW	2.03	2.03	2.03	2.0	2.28	2.28	2.28	2.3	2.56	2.56	2.56	2.6	2.87	2.86	2.86	2.9	3.21	3.20	3.20	3.2	3.60	3.60	3.60	3.6
		Amps	7.63	7.62	7.60	7.7	8.72	8.71	8.69	8.8	9.93	9.93	9.91	10.0	11.25	11.24	11.22	11.3	12.72	12.71	12.70	12.8	14.45	14.44	14.42	14.5
		Hi PR	266	267	269	273.2	307	308	310	314.2	350	351	353	357.2	396	397	399	403.4	446	447	449	453.3	499	500	502	506.6
		Lo PR	124	125	128	133.5	127	133	136	140.7	137	139	142	147.0	143	144	147	152.4	127	150	153	157.7	155	156	159	164.3
85	900	MBh	36.1	36.6	37.7	39.3	35.8	36.3	37.3	39.0	34.8	35.3	36.4	38.0	33.2	33.7	34.8	36.4	31.3	31.8	32.9	34.5	29.5	30.0	31.1	32.7
		S/T	0.85	0.79	0.68	0.6	0.85	0.79	0.69	0.6	0.88	0.82	0.71	0.6	0.92	0.85	0.73	0.6	0.97	0.90	0.77	0.6	1.00	0.99	0.85	0.7
		ΔT	30.87	29.14	25.89	22.5	30.83	29.09	25.85	22.5	31.07	29.33	26.09	22.7	30.81	29.07	25.83	22.5	30.58	28.84	25.60	22.2	29.80	29.93	26.68	23.3
		kW	2.00	2.00	1.99	2.0	2.25	2.25	2.24	2.3	2.53	2.53	2.52	2.5	2.83	2.83	2.83	2.8	3.17	3.17	3.16	3.2	3.57	3.57	3.56	3.6
		Amps	7.48	7.47	7.45	7.5	8.57	8.56	8.54	8.6	9.78	9.77	9.76	9.8	11.10	11.09	11.07	11.2	12.57	12.56	12.54	12.6	14.30	14.29	14.27	14.4
		Hi PR	260	261	263	267.4	301	302	304	308.5	344	345	347	351.4	390	391	393	397.7	440	441	443	447.6	493	494	496	500.8
		Lo PR	115	121	125	129.6	114	129	132	136.8	115	135	138	143.2	114	140	143	148.5	114	142	149	153.8	151	142	155	160.4
	1160	MBh	36.9	37.4	38.4	40.1	36.6	37.1	38.1	39.8	35.6	36.1	37.2	38.8	34.0	34.5	35.6	37.2	32.1	32.6	33.6	35.3	30.3	30.8	31.9	33.5
		S/T	1.00	0.92	0.79	0.7	1.00	0.93	0.80	0.7	1.00	0.96	0.82	0.7	1.00	1.00	0.85	0.7	1.00	1.00	0.89	0.7	1.00	1.00	0.99	0.8
		ΔT	28.81	27.07	23.83	20.5	28.65	27.02	23.78	20.4	27.93	27.27	24.02	20.7	26.67	27.00	23.76	20.4	25.14	25.53	23.53	20.2	23.74	24.13	24.62	21.3
		kW	2.02	2.02	2.02	2.0	2.27	2.27	2.27	2.3	2.55	2.55	2.55	2.6	2.86	2.86	2.85	2.9	3.20	3.19	3.19	3.2	3.59	3.59	3.59	3.6
		Amps	7.59	7.58	7.56	7.6	8.68	8.67	8.65	8.7	9.89	9.89	9.87	10.0	11.21	11.20	11.18	11.3	12.68	12.67	12.66	12.7	14.41	14.40	14.38	14.5
		Hi PR	264	265	267	271.6	305	306	308	312.6	348	349	351	355.6	394	395	397	401.8	444	445	447	451.7	497	499	500	505.0
		Lo PR	115	125	128	132.7	130	132	135	139.9	137	138	141	146.2	142	142	147	151.6	115	149	152	156.9	154	155	158	163.5
	1350	MBh	37.6	38.1	39.2	40.8	37.3	37.8	38.9	40.5	36.4	36.9	38.0	39.6	34.8	35.3	36.4	38.0	32.8	33.3	34.4	36.0	31.1	31.6	32.6	34.2
		S/T	1.00	1.00	0.86	0.7	1.00	1.00	0.86	0.7	1.00	1.00	0.90	0.7	1.00	1.00	0.92	0.8	1.00	1.00	0.97	0.8	1.00	1.00	1.00	0.9
		ΔT	25.35	25.69	22.69	19.3	25.13	25.47	22.64	19.3	24.51	24.84	22.89	19.5	23.43	23.77	22.63	19.3	22.11	22.45	22.39	19.0	20.91	21.25	21.97	20.1
		kW	2.04	2.04	2.03	2.1	2.29	2.29	2.28	2.3	2.57	2.57	2.56	2.6	2.87	2.87	2.87	2.9	3.21	3.21	3.20	3.2	3.61	3.61	3.60	3.6
		Amps	7.65	7.64	7.62	7.7	8.74	8.73	8.71	8.8	9.96	9.95	9.93	10.0	11.27	11.26	11.25	11.3	12.74	12.74	12.72	12.8	14.47	14.46	14.44	14.5
		Hi PR	267	268	270	274.4	308	309	311	315.4	351	352	354	358.4	397	398	400	404.6	447	448	450	454.5	500	501	503	507.8
		Lo PR	126	143	130	135.2	133	143	137	142.5	139	143	144	148.8	145	146	149	154.2	150	151	154	159.5	156	158	167	166.0

IDB: Entering Indoor Dry Bulb Temperature

Shaded area reflects AHRI (TVA) conditions

W = Total system power

High and low pressures are measured at the liquid and suction access fittings.

Amps: Unit amps (comp.+ evaporator + condenser fan motors)

Design Subcooling, 16 - 19 °F @ the liquid access fitting connection ARI 95 test conditions. Design Superheat 8 - 12°F @ the compressor suction access fitting connection.

			Outdoor Ambient Temperature																							
			65				75				85				95				105				115			
			Entering Indoor Wet Bulb Temperature																							
IDB	Airflow	ID WB	59	63	67	71	59	63	67	71	59	63	67	71	59	63	67	71	59	63	67	71	59	63	67	71
70	1200	MBh	46.1	46.7	48.1	-	45.6	46.3	47.7	-	44.4	45.1	46.5	-	42.3	43.0	44.4	-	39.8	40.4	41.8	-	37.4	38.1	39.5	-
		S/T	0.57	0.51	0.41	-	0.58	0.52	0.41	-	0.60	0.54	0.43	-	0.62	0.56	0.44	-	0.65	0.59	0.46	-	0.73	0.66	0.53	-
		ΔT	19.93	18.21	15.00	-	19.89	18.17	14.95	-	20.13	18.41	15.19	-	19.87	18.15	14.93	-	19.64	17.92	14.70	-	20.72	19.00	15.78	-
		kW	2.80	2.80	2.79	-	3.11	3.11	3.10	-	3.45	3.45	3.45	-	3.83	3.82	3.82	-	4.24	4.24	4.24	-	4.73	4.73	4.73	-
		Amps	9.99	9.98	9.96	-	11.34	11.33	11.30	-	12.84	12.83	12.81	-	14.46	14.45	14.43	-	16.28	16.27	16.25	-	18.41	18.40	18.37	-
		Hi PR	255	256	258	-	295	296	298	-	338	339	341	-	384	385	387	-	433	434	436	-	486	487	489	-
		Lo PR	121	122	125	-	128	130	133	-	135	136	139	-	140	142	145	-	143	147	150	-	141	145	155	-
	1600	MBh	47.2	47.9	49.3	-	46.8	47.4	48.8	-	45.6	46.2	47.6	-	43.5	44.1	45.5	-	40.9	41.5	42.9	-	38.5	39.2	40.6	-
		S/T	0.66	0.58	0.45	-	0.66	0.59	0.45	-	0.69	0.61	0.47	-	0.71	0.63	0.49	-	0.74	0.66	0.51	-	0.84	0.75	0.58	-
		ΔT	17.58	15.86	12.65	-	17.54	15.81	12.60	-	17.78	16.06	12.84	-	17.52	15.80	12.58	-	17.29	15.57	12.35	-	18.37	16.64	13.43	-
		kW	2.83	2.83	2.83	-	3.14	3.14	3.14	-	3.49	3.49	3.48	-	3.86	3.86	3.86	-	4.28	4.28	4.27	-	4.77	4.77	4.76	-
		Amps	10.15	10.14	10.12	-	11.50	11.49	11.46	-	13.00	12.99	12.96	-	14.62	14.61	14.59	-	16.44	16.43	16.40	-	18.57	18.56	18.53	-
		Hi PR	259	260	262	-	300	301	303	-	342	344	345	-	388	389	391	-	438	439	441	-	490	491	493	-
		Lo PR	124	126	129	-	132	133	136	-	138	140	143	-	144	145	148	-	149	151	154	-	147	151	161	-
	1800	MBh	47.9	48.6	50.0	-	47.5	48.2	49.6	-	46.3	47.0	48.4	-	44.2	44.9	46.3	-	41.6	42.3	43.7	-	39.3	39.9	41.3	-
		S/T	0.69	0.61	0.47	-	0.69	0.61	0.47	-	0.72	0.64	0.49	-	0.75	0.66	0.50	-	0.78	0.69	0.52	-	0.88	0.78	0.60	-
		ΔT	16.71	14.99	11.77	-	16.66	14.94	11.72	-	16.90	15.18	11.96	-	16.64	14.92	11.70	-	16.41	14.69	11.47	-	17.49	15.77	12.55	-
		kW	2.85	2.85	2.84	-	3.16	3.16	3.15	-	3.50	3.50	3.50	-	3.88	3.87	3.87	-	4.29	4.29	4.29	-	4.78	4.78	4.78	-
		Amps	10.21	10.20	10.18	-	11.55	11.54	11.52	-	13.06	13.05	13.02	-	14.68	14.67	14.65	-	16.50	16.48	16.46	-	18.62	18.61	18.59	-
		Hi PR	261	263	264	-	302	303	305	-	345	346	347	-	390	391	393	-	440	441	443	-	492	493	495	-
		Lo PR	126	128	131	-	134	135	138	-	140	142	145	-	146	147	150	-	150	153	156	-	149	154	163	-
75	1200	MBh	46.3	47.0	48.4	50.5	45.9	46.5	47.9	50.1	44.7	45.3	46.7	48.9	42.6	43.2	44.6	46.8	40.0	40.7	42.1	44.2	37.6	38.3	39.7	41.8
		S/T	0.68	0.62	0.51	0.4	0.68	0.62	0.52	0.4	0.71	0.65	0.54	0.4	0.73	0.67	0.55	0.4	0.77	0.70	0.58	0.5	0.86	0.79	0.65	0.5
		ΔT	23.72	22.00	18.78	15.5	23.67	21.95	18.74	15.4	23.92	22.19	18.98	15.6	23.66	21.93	18.72	15.4	23.43	21.70	18.49	15.2	24.51	22.78	19.57	16.2
		kW	2.80	2.79	2.79	2.8	3.11	3.10	3.10	3.1	3.45	3.45	3.44	3.5	3.82	3.82	3.82	3.8	4.24	4.24	4.23	4.3	4.73	4.73	4.72	4.7
		Amps	9.98	9.97	9.95	10.1	11.33	11.32	11.30	11.4	12.83	12.82	12.80	12.9	14.46	14.44	14.42	14.5	16.27	16.26	16.24	16.3	18.40	18.39	18.37	18.5
		Hi PR	255	256	258	262.4	296	297	298	303.0	338	339	341	345.5	384	385	387	391.2	433	434	436	440.6	486	487	489	493.3
		Lo PR	121	122	125	130.7	128	130	133	138.1	135	136	139	144.6	139	142	145	150.2	139	147	150	155.6	140	149	157	162.4
	1600	MBh	47.4	48.1	49.5	51.6	47.0	47.7	49.1	51.2	45.8	46.5	47.9	50.0	43.7	**44.4**	45.8	47.9	41.1	41.8	43.2	45.3	38.8	39.4	40.8	43.0
		S/T	0.79	0.72	0.58	0.4	0.80	0.72	0.59	0.4	0.83	0.75	0.61	0.5	0.86	**0.78**	0.63	0.5	0.90	0.82	0.66	0.5	1.00	0.91	0.74	0.6
		ΔT	21.37	19.65	16.43	13.1	21.32	19.60	16.39	13.1	21.57	19.84	16.63	13.3	21.31	**19.58**	16.37	13.0	21.08	19.35	16.14	12.8	22.04	20.43	17.22	13.9
		kW	2.83	2.83	2.83	2.8	3.14	3.14	3.13	3.2	3.49	3.48	3.48	3.5	3.86	**3.86**	3.85	3.9	4.28	4.28	4.27	4.3	4.77	4.77	4.76	4.8
		Amps	10.14	10.13	10.11	10.2	11.49	11.48	11.45	11.6	12.99	12.98	12.95	13.1	14.61	**14.60**	14.58	14.7	16.43	16.42	16.39	16.5	18.56	18.55	18.52	18.6
		Hi PR	260	261	263	267.0	300	301	303	307.6	343	344	346	350.1	388	**390**	391	395.9	438	439	441	445.2	490	492	493	497.9
		Lo PR	124	126	129	134.2	132	133	136	141.6	138	140	143	148.2	139	**145**	148	153.7	139	151	154	159.1	151	155	161	165.9
	1800	MBh	48.2	48.8	50.2	52.4	47.8	48.4	49.8	52.0	46.5	47.2	48.6	50.7	44.4	45.1	46.5	48.6	41.9	42.5	43.9	46.1	39.5	40.2	41.6	43.7
		S/T	0.84	0.76	0.61	0.5	0.85	0.77	0.62	0.5	0.88	0.80	0.64	0.5	0.91	0.82	0.66	0.5	0.96	0.86	0.69	0.5	1.00	0.96	0.78	0.6
		ΔT	20.49	18.77	15.56	12.2	20.45	18.73	15.51	12.2	20.69	18.97	15.75	12.4	20.43	18.71	15.49	12.2	20.20	18.48	15.26	11.9	19.96	19.56	16.34	13.0
		kW	2.85	2.84	2.84	2.9	3.16	3.15	3.15	3.2	3.50	3.50	3.49	3.5	3.87	3.87	3.87	3.9	4.29	4.29	4.28	4.3	4.78	4.78	4.77	4.8
		Amps	10.20	10.19	10.17	10.3	11.55	11.54	11.51	11.6	13.05	13.04	13.01	13.1	14.67	14.66	14.64	14.7	16.49	16.48	16.45	16.6	18.62	18.61	18.58	18.7
		Hi PR	262	263	265	269.1	302	303	305	309.7	345	346	348	352.2	391	392	393	398.0	440	441	443	447.3	493	494	496	500.0
		Lo PR	126	128	131	136.2	134	135	138	143.6	139	142	145	150.2	139	147	150	155.7	140	153	156	161.1	157	157	163	167.9

IDB: Entering Indoor Dry Bulb Temperature

Shaded area reflects AHRI (TVA) conditions

W = Total system power

High and low pressures are measured at the liquid and suction access fittings.

Amps: Unit amps (comp.+ evaporator + condenser fan motors)

Design Subcooling, 16 - 19 °F @ the liquid access fitting connection ARI 95 test conditions. Design Superheat 8 - 12°F @ the compressor suction access fitting connection.

			Outdoor Ambient Temperature																							
			65				75				85				95				105				115			
			Entering Indoor Wet Bulb Temperature																							
IDB	Airflow	ID WB	59	63	67	71	59	63	67	71	59	63	67	71	59	63	67	71	59	63	67	71	59	63	67	71
80	1200	MBh	46.5	47.2	48.6	50.7	46.1	46.8	48.2	50.3	44.9	45.6	47.0	49.1	42.8	43.5	44.9	47.0	40.2	40.9	42.3	44.4	37.9	38.6	39.9	42.1
		S/T	0.78	0.72	0.61	0.5	0.79	0.73	0.62	0.5	0.82	0.75	0.64	0.5	0.85	0.78	0.66	0.5	0.89	0.82	0.70	0.6	0.99	0.91	0.77	0.6
		ΔT	27.53	25.81	22.60	19.3	27.49	25.77	22.55	19.2	27.73	26.01	22.79	19.5	27.47	25.75	22.53	19.2	27.24	25.52	22.30	19.0	28.32	26.60	23.38	20.0
		kW	2.80	2.80	2.79	2.8	3.11	3.10	3.10	3.1	3.45	3.45	3.44	3.5	3.83	3.82	3.82	3.8	4.24	4.24	4.24	4.3	4.73	4.73	4.73	4.7
		Amps	9.99	9.98	9.96	10.1	11.34	11.33	11.30	11.4	12.84	12.83	12.80	12.9	14.46	14.45	14.43	14.5	16.28	16.27	16.24	16.3	18.41	18.40	18.37	18.5
		Hi PR	255	257	258	262.8	296	297	299	303.4	339	340	341	345.9	384	385	387	391.7	434	435	437	441.1	486	487	489	493.7
		Lo PR	121	123	126	131.2	128	130	133	138.7	128	137	140	145.2	128	142	145	150.7	128	148	151	156.1	127	152	158	162.9
	1600	MBh	47.7	48.3	49.7	51.9	47.3	47.9	49.3	51.5	46.0	46.7	48.1	50.2	43.9	44.6	**46.0**	48.1	41.4	42.0	43.4	45.6	39.0	39.7	41.1	43.2
		S/T	0.93	0.85	0.72	0.6	0.94	0.86	0.72	0.6	0.97	0.89	0.75	0.6	1.00	0.92	**0.77**	0.6	1.00	0.97	0.81	0.6	1.00	1.00	0.90	0.7
		ΔT	25.18	23.46	20.24	16.9	25.14	23.41	20.20	16.9	25.38	23.66	20.44	17.1	24.97	23.40	**20.18**	16.8	23.51	23.17	19.95	16.6	22.17	22.55	21.03	17.7
		kW	2.83	2.83	2.83	2.9	3.14	3.14	3.14	3.2	3.49	3.49	3.48	3.5	3.86	3.86	**3.85**	3.9	4.28	4.28	4.27	4.3	4.77	4.77	4.76	4.8
		Amps	10.15	10.14	10.12	10.2	11.49	11.48	11.46	11.6	13.00	12.99	12.96	13.1	14.62	14.61	**14.59**	14.7	16.44	16.42	16.40	16.5	18.56	18.55	18.53	18.6
		Hi PR	260	261	263	267.5	301	302	304	308.0	343	344	346	350.6	389	390	**392**	396.3	438	439	441	445.7	491	492	494	498.4
		Lo PR	125	126	130	134.7	127	134	137	142.2	127	140	143	148.7	144	146	**149**	154.2	150	151	154	159.6	157	158	161	166.4
	1800	MBh	48.4	49.1	50.5	52.6	48.0	48.7	50.1	52.2	46.8	47.4	48.8	51.0	44.7	45.3	46.7	48.9	42.1	42.8	44.2	46.3	39.8	40.4	41.8	44.0
		S/T	0.99	0.91	0.76	0.6	1.00	0.92	0.76	0.6	1.00	0.95	0.79	0.6	1.00	0.98	0.82	0.6	1.00	1.00	0.86	0.7	1.00	1.00	0.95	0.8
		ΔT	24.31	22.58	19.37	16.0	24.24	22.54	19.32	16.0	23.63	22.78	19.56	16.2	22.57	22.52	19.30	16.0	21.27	21.60	19.07	15.7	20.08	20.42	20.15	16.8
		kW	2.85	2.85	2.84	2.9	3.16	3.15	3.15	3.2	3.50	3.50	3.49	3.5	3.88	3.87	3.87	3.9	4.29	4.29	4.29	4.3	4.78	4.78	4.78	4.8
		Amps	10.21	10.20	10.17	10.3	11.55	11.54	11.52	11.6	13.05	13.04	13.02	13.1	14.68	14.67	14.65	14.7	16.49	16.48	16.46	16.6	18.62	18.61	18.59	18.7
		Hi PR	262	263	265	269.6	303	304	306	310.2	345	346	348	352.7	391	392	394	398.5	440	442	443	447.8	493	494	496	500.5
		Lo PR	127	128	132	136.7	134	136	139	144.2	141	142	145	150.7	128	148	151	156.2	152	153	156	161.6	159	160	163	168.4
85	1200	MBh	47.3	48.0	49.4	51.5	46.9	47.6	49.0	51.1	45.7	46.4	47.8	49.9	43.6	44.3	45.7	47.8	41.0	41.7	43.1	45.2	38.7	39.3	40.7	42.9
		S/T	0.86	0.80	0.69	0.6	0.87	0.81	0.70	0.6	0.90	0.84	0.72	0.6	0.93	0.87	0.75	0.6	0.99	0.92	0.79	0.7	1.00	1.00	0.87	0.7
		ΔT	30.92	29.19	25.98	22.6	30.87	29.15	25.93	22.6	31.11	29.39	26.17	22.8	30.85	29.13	25.91	22.6	30.62	28.90	25.68	22.4	29.30	29.80	26.76	23.4
		kW	2.80	2.80	2.80	2.8	3.11	3.11	3.11	3.1	3.46	3.46	3.45	3.5	3.83	3.83	3.82	3.8	4.25	4.25	4.24	4.3	4.74	4.74	4.73	4.8
		Amps	10.02	10.01	9.98	10.1	11.36	11.35	11.33	11.4	12.86	12.85	12.83	12.9	14.49	14.48	14.45	14.6	16.30	16.29	16.27	16.4	18.43	18.42	18.40	18.5
		Hi PR	257	258	260	264.1	297	298	300	304.6	340	341	343	347.1	386	387	388	392.9	435	436	438	442.3	488	489	490	495.0
		Lo PR	115	125	128	133.0	115	132	135	140.5	115	139	142	147.0	115	142	147	152.5	114	142	153	158.0	155	156	160	164.7
	1600	MBh	48.5	49.1	50.5	52.7	48.1	48.7	50.1	52.2	46.8	47.5	48.9	51.0	44.7	45.4	46.8	48.9	42.2	42.8	44.2	46.4	39.8	40.5	41.9	44.0
		S/T	1.00	0.96	0.82	0.7	1.00	0.97	0.83	0.7	1.00	1.00	0.86	0.7	1.00	1.00	0.89	0.7	1.00	1.00	0.93	0.8	1.00	1.00	1.00	0.8
		ΔT	27.54	26.84	23.63	20.3	27.30	26.80	23.58	20.2	26.61	26.98	23.82	20.5	25.41	25.79	23.56	20.2	23.95	24.33	23.33	20.0	22.62	23.00	23.79	21.1
		kW	2.84	2.84	2.83	2.9	3.15	3.15	3.14	3.2	3.49	3.49	3.49	3.5	3.87	3.87	3.86	3.9	4.29	4.28	4.28	4.3	4.78	4.77	4.77	4.8
		Amps	10.18	10.16	10.14	10.2	11.52	11.51	11.49	11.6	13.02	13.01	12.99	13.1	14.65	14.64	14.61	14.7	16.46	16.45	16.43	16.5	18.59	18.58	18.56	18.7
		Hi PR	261	262	264	268.7	302	303	305	309.3	344	345	347	351.8	390	391	393	397.5	439	441	442	446.9	492	493	495	499.6
		Lo PR	127	128	131	136.6	134	136	139	144.0	141	144	145	150.5	146	148	151	156.1	152	153	156	161.5	158	160	167	168.3
	1800	MBh	49.2	49.9	51.3	53.4	48.8	49.5	50.9	53.0	47.6	48.2	49.6	51.8	45.5	46.1	47.5	49.7	42.9	43.6	45.0	47.1	40.6	41.2	42.6	44.7
		S/T	1.00	1.00	0.88	0.7	1.00	1.00	0.88	0.7	1.00	1.00	0.92	0.8	1.00	1.00	0.95	0.8	1.00	1.00	0.99	0.8	1.00	1.00	1.00	0.9
		ΔT	24.85	25.19	22.75	19.4	24.64	24.98	22.70	19.4	24.03	24.36	22.95	19.6	22.96	23.30	22.69	19.4	21.67	22.00	22.46	19.1	20.48	20.81	21.52	20.2
		kW	2.85	2.85	2.85	2.9	3.16	3.16	3.16	3.2	3.51	3.51	3.50	3.5	3.88	3.88	3.87	3.9	4.30	4.30	4.29	4.3	4.79	4.79	4.78	4.8
		Amps	10.23	10.22	10.20	10.3	11.58	11.57	11.55	11.6	13.08	13.07	13.05	13.1	14.70	14.69	14.67	14.8	16.52	16.51	16.49	16.6	18.65	18.64	18.62	18.7
		Hi PR	263	264	266	270.8	304	305	307	311.4	346	348	349	353.9	392	393	395	399.7	442	443	445	449.0	494	495	497	501.7
		Lo PR	129	143	133	138.6	136	143	141	146.0	143	144	147	152.5	148	150	153	158.1	154	155	158	163.5	160	162	166	170.3

IDB: Entering Indoor Dry Bulb Temperature

Shaded area reflects AHRI (TVA) conditions

W = Total system power

High and low pressures are measured at the liquid and suction access fittings.

Amps: Unit amps (comp.+ evaporator + condenser fan motors)

Design Subcooling, 16 - 19 °F @ the liquid access fitting connection ARI 95 test conditions. Design Superheat 8 - 12°F @ the compressor suction access fitting connection.

			Outdoor Ambient Temperature																							
			65				75				85				95				105				115			
			Entering Indoor Wet Bulb Temperature																							
IDB	Airflow	ID WB	59	63	67	71	59	63	67	71	59	63	67	71	59	63	67	71	59	63	67	71	59	63	67	71
70	1500	MBh	57.9	58.7	60.4	-	57.3	58.2	59.9	-	55.8	56.6	58.4	-	53.2	54.0	55.8	-	50.0	50.8	52.5	-	47.0	47.9	49.6	-
		S/T	0.56	0.51	0.40	-	0.57	0.51	0.40	-	0.59	0.53	0.42	-	0.61	0.55	0.43	-	0.64	0.57	0.45	-	0.72	0.65	0.52	-
		ΔT	19.75	17.99	14.70	-	19.70	17.94	14.65	-	19.95	18.19	14.90	-	19.69	17.92	14.63	-	19.45	17.69	14.40	-	20.55	18.79	15.50	-
		kW	3.48	3.47	3.47	-	3.87	3.87	3.86	-	4.31	4.31	4.30	-	4.79	4.79	4.78	-	5.32	5.32	5.31	-	5.94	5.94	5.93	-
		Amps	12.03	12.02	11.99	-	13.74	13.73	13.70	-	15.66	15.64	15.61	-	17.73	17.71	17.68	-	20.04	20.03	20.00	-	22.75	22.74	22.71	-
		Hi PR	255	256	258	-	295	296	298	-	337	338	340	-	383	384	386	-	432	433	435	-	484	486	487	-
		Lo PR	119	120	124	-	126	128	131	-	133	134	137	-	138	140	143	-	143	145	148	-	141	146	155	-
	1860	MBh	59.0	59.8	61.6	-	58.5	59.3	61.0	-	56.9	57.8	59.5	-	54.3	55.1	56.9	-	51.1	51.9	53.7	-	48.2	49.0	50.7	-
		S/T	0.62	0.56	0.43	-	0.63	0.56	0.43	-	0.65	0.58	0.45	-	0.68	0.60	0.46	-	0.71	0.63	0.48	-	0.80	0.71	0.55	-
		ΔT	17.99	16.23	12.94	-	17.95	16.18	12.89	-	18.19	16.43	13.14	-	17.93	16.17	12.87	-	17.69	15.93	12.64	-	18.80	17.03	13.74	-
		kW	3.51	3.51	3.50	-	3.91	3.90	3.90	-	4.35	4.34	4.34	-	4.82	4.82	4.81	-	5.35	5.35	5.34	-	5.98	5.97	5.97	-
		Amps	12.18	12.16	12.13	-	13.89	13.88	13.85	-	15.80	15.79	15.76	-	17.87	17.86	17.83	-	20.19	20.17	20.14	-	22.90	22.89	22.86	-
		Hi PR	258	259	261	-	298	300	301	-	341	342	344	-	386	387	389	-	435	437	438	-	488	489	491	-
		Lo PR	122	123	126	-	129	130	134	-	135	137	140	-	141	142	145	-	146	148	151	-	146	150	157	-
	2250	MBh	60.7	61.5	63.2	-	60.1	61.0	62.7	-	58.6	59.4	61.2	-	56.0	56.8	58.5	-	52.8	53.6	55.3	-	49.8	50.7	52.4	-
		S/T	0.68	0.60	0.45	-	0.68	0.60	0.45	-	0.71	0.62	0.47	-	0.73	0.64	0.48	-	0.76	0.67	0.50	-	0.86	0.76	0.58	-
		ΔT	16.55	14.79	11.50	-	16.50	14.74	11.45	-	16.75	14.99	11.70	-	16.49	14.72	11.43	-	16.25	14.49	11.20	-	17.35	15.59	12.30	-
		kW	3.54	3.54	3.53	-	3.93	3.93	3.92	-	4.37	4.37	4.36	-	4.85	4.85	4.84	-	5.38	5.38	5.37	-	6.01	6.00	6.00	-
		Amps	12.30	12.28	12.25	-	14.01	14.00	13.97	-	15.92	15.91	15.88	-	17.99	17.98	17.95	-	20.31	20.29	20.26	-	23.02	23.01	22.98	-
		Hi PR	262	263	265	-	302	303	305	-	344	345	347	-	390	391	393	-	439	440	442	-	491	493	494	-
		Lo PR	125	127	130	-	132	134	137	-	139	140	143	-	144	146	149	-	149	151	154	-	150	155	161	-
75	1500	MBh	58.2	59.0	60.7	63.4	57.6	58.5	60.2	62.9	56.1	56.9	58.7	61.4	53.5	54.3	56.1	58.7	50.3	51.1	52.8	55.5	47.3	48.2	49.9	52.6
		S/T	0.67	0.61	0.50	0.4	0.67	0.62	0.51	0.4	0.70	0.64	0.53	0.4	0.73	0.66	0.54	0.4	0.77	0.70	0.57	0.4	0.85	0.78	0.64	0.5
		ΔT	23.63	21.86	18.57	15.2	23.58	21.82	18.53	15.1	23.83	22.06	18.77	15.4	23.56	21.80	18.51	15.1	23.33	21.56	18.27	14.9	24.43	22.67	19.38	16.0
		kW	3.48	3.47	3.47	3.5	3.87	3.87	3.86	3.9	4.31	4.31	4.30	4.3	4.79	4.78	4.78	4.8	5.32	5.31	5.31	5.3	5.94	5.94	5.93	6.0
		Amps	12.02	12.01	11.98	12.1	13.73	13.72	13.69	13.8	15.65	15.63	15.60	15.7	17.72	17.70	17.67	17.8	20.03	20.02	19.99	20.1	22.74	22.73	22.70	22.8
		Hi PR	255	256	258	262.2	295	296	298	302.6	338	339	340	344.9	383	384	386	390.5	432	433	435	439.6	485	486	488	492.0
		Lo PR	119	121	124	128.7	126	128	131	136.0	133	134	137	142.4	138	140	143	147.8	140	145	148	153.1	140	149	155	159.7
	1860	MBh	59.3	60.1	61.9	64.5	58.8	59.6	61.4	64.0	57.3	58.1	59.8	62.5	54.6	**55.4**	57.2	59.9	51.4	52.2	54.0	56.7	48.5	49.3	51.1	53.7
		S/T	0.75	0.68	0.56	0.4	0.76	0.69	0.56	0.4	0.79	0.72	0.58	0.4	0.82	**0.74**	0.60	0.5	0.86	0.78	0.63	0.5	0.96	0.87	0.71	0.5
		ΔT	21.87	20.11	16.82	13.4	21.82	20.06	16.77	13.4	22.07	20.31	17.02	13.6	21.80	**20.04**	16.75	13.3	21.57	19.81	16.51	13.1	22.67	20.91	17.62	14.2
		kW	3.51	3.51	3.50	3.5	3.90	3.90	3.89	3.9	4.34	4.34	4.33	4.4	4.82	**4.82**	4.81	4.8	5.35	5.35	5.34	5.4	5.98	5.97	5.97	6.0
		Amps	12.17	12.15	12.12	12.3	13.88	13.87	13.84	14.0	15.79	15.78	15.75	15.9	17.86	**17.85**	17.82	18.0	20.18	20.16	20.13	20.3	22.89	22.88	22.85	23.0
		Hi PR	258	259	261	265.7	299	300	302	306.1	341	342	344	348.4	387	**388**	389	393.9	436	437	439	443.0	488	489	491	495.5
		Lo PR	122	123	126	131.4	129	130	134	138.7	135	137	140	145.0	140	**142**	145	150.4	140	148	151	155.7	140	153	157	162.4
	2250	MBh	61.0	61.8	63.5	66.2	60.4	61.3	63.0	65.7	58.9	59.7	61.5	64.1	56.3	57.1	58.8	61.5	53.1	53.9	55.6	58.3	50.1	51.0	52.7	55.4
		S/T	0.83	0.75	0.60	0.4	0.83	0.75	0.60	0.4	0.87	0.78	0.63	0.5	0.90	0.81	0.64	0.5	0.94	0.84	0.67	0.5	1.00	0.95	0.76	0.6
		ΔT	20.43	18.66	15.37	12.0	20.38	18.62	15.33	11.9	20.63	18.86	15.57	12.2	20.36	18.60	15.31	11.9	20.13	18.36	15.07	11.7	20.25	19.47	16.18	12.8
		kW	3.54	3.53	3.53	3.6	3.93	3.93	3.92	4.0	4.37	4.37	4.36	4.4	4.85	4.84	4.84	4.9	5.38	5.38	5.37	5.4	6.00	6.00	5.99	6.0
		Amps	12.29	12.27	12.24	12.4	14.00	13.99	13.96	14.1	15.91	15.90	15.87	16.0	17.98	17.97	17.94	18.1	20.30	20.28	20.25	20.4	23.01	23.00	22.97	23.1
		Hi PR	262	263	265	269.2	302	303	305	309.6	345	346	347	351.9	390	391	393	397.5	439	440	442	446.6	492	493	495	499.0
		Lo PR	125	127	130	134.8	132	134	137	142.1	139	140	143	148.5	139	146	149	153.9	139	151	154	159.2	156	158	161	165.8

IDB: Entering Indoor Dry Bulb Temperature

Shaded area reflects AHRI (TVA) conditions

W = Total system power

High and low pressures are measured at the liquid and suction access fittings.

Amps: Unit amps (comp.+ evaporator + condenser fan motors)

Design Subcooling, 16 - 19 °F @ the liquid access fitting connection ARI 95 test conditions. Design Superheat 8 - 12°F @ the compressor suction access fitting connection.

			Outdoor Ambient Temperature																							
			65				75				85				95				105				115			
			Entering Indoor Wet Bulb Temperature																							
IDB	Airflow	ID WB	59	63	67	71	59	63	67	71	59	63	67	71	59	63	67	71	59	63	67	71	59	63	67	71
80	1500	MBh	58.5	59.3	61.0	63.7	57.9	58.8	60.5	63.2	56.4	57.2	59.0	61.7	53.8	54.6	56.4	59.0	50.6	51.4	53.2	55.8	47.6	48.5	50.2	52.9
		S/T	0.78	0.72	0.61	0.5	0.78	0.72	0.61	0.5	0.81	0.75	0.63	0.5	0.84	0.78	0.66	0.5	0.89	0.82	0.69	0.6	0.98	0.90	0.76	0.6
		ΔT	27.53	25.77	22.48	19.1	27.48	25.72	22.43	19.0	27.73	25.97	22.67	19.3	27.46	25.70	22.41	19.0	27.23	25.46	22.17	18.8	28.33	26.57	23.28	19.9
		kW	3.48	3.47	3.47	3.5	3.87	3.87	3.86	3.9	4.31	4.31	4.30	4.3	4.79	4.78	4.78	4.8	5.32	5.32	5.31	5.3	5.94	5.94	5.93	6.0
		Amps	12.03	12.01	11.98	12.1	13.74	13.73	13.70	13.8	15.65	15.64	15.61	15.7	17.72	17.71	17.68	17.8	20.04	20.02	19.99	20.1	22.75	22.74	22.71	22.8
		Hi PR	255	256	258	262.7	296	297	299	303.1	338	339	341	345.4	384	385	386	390.9	433	434	436	440.1	485	486	488	492.5
		Lo PR	120	121	124	129.2	127	128	131	136.5	128	135	138	142.9	127	140	143	148.3	127	145	148	153.6	127	152	155	160.2
	1860	MBh	59.6	60.4	62.2	64.8	59.1	59.9	61.7	64.3	57.6	58.4	60.1	62.8	54.9	55.8	**57.5**	60.2	51.7	52.5	54.3	57.0	48.8	49.6	51.4	54.0
		S/T	0.88	0.81	0.68	0.5	0.89	0.82	0.69	0.5	0.92	0.85	0.71	0.6	0.96	0.88	**0.73**	0.6	1.00	0.92	0.77	0.6	1.00	1.00	0.86	0.7
		ΔT	25.77	24.01	20.72	17.3	25.72	23.96	20.67	17.3	25.97	24.21	20.92	17.5	25.71	23.94	**20.65**	17.2	25.28	23.71	20.42	17.0	23.84	24.25	21.52	18.1
		kW	3.51	3.51	3.50	3.5	3.91	3.90	3.90	3.9	4.35	4.34	4.34	4.4	4.82	4.82	**4.81**	4.8	5.35	5.35	5.34	5.4	5.98	5.97	5.97	6.0
		Amps	12.17	12.16	12.13	12.3	13.89	13.87	13.85	14.0	15.80	15.79	15.76	15.9	17.87	17.86	**17.83**	18.0	20.18	20.17	20.14	20.3	22.90	22.88	22.86	23.0
		Hi PR	259	260	262	266.2	299	300	302	306.5	341	343	344	348.8	387	388	**390**	394.4	436	437	439	443.5	489	490	491	495.9
		Lo PR	122	124	127	131.9	127	131	134	139.2	128	137	140	145.6	127	143	**146**	151.0	147	148	151	156.3	153	155	158	162.9
	2250	MBh	61.3	62.1	63.8	66.5	60.7	61.6	63.3	66.0	59.2	60.0	61.8	64.4	56.6	57.4	59.2	61.8	53.4	54.2	55.9	58.6	50.4	51.3	53.0	55.7
		S/T	0.98	0.90	0.75	0.6	0.99	0.91	0.75	0.6	1.00	0.94	0.78	0.6	1.00	0.97	0.80	0.6	1.00	1.00	0.84	0.7	1.00	1.00	0.94	0.7
		ΔT	24.33	22.57	19.28	15.9	24.28	22.52	19.23	15.8	23.92	22.77	19.48	16.1	22.86	22.50	19.21	15.8	21.56	21.90	18.97	15.6	20.38	20.71	20.08	16.7
		kW	3.54	3.54	3.53	3.6	3.93	3.93	3.92	4.0	4.37	4.37	4.36	4.4	4.85	4.85	4.84	4.9	5.38	5.38	5.37	5.4	6.01	6.00	6.00	6.0
		Amps	12.29	12.28	12.25	12.4	14.01	13.99	13.97	14.1	15.92	15.91	15.88	16.0	17.99	17.98	17.95	18.1	20.30	20.29	20.26	20.4	23.02	23.00	22.98	23.1
		Hi PR	262	263	265	269.7	303	304	306	310.1	345	346	348	352.4	391	392	394	398.0	440	441	443	447.1	492	493	495	499.5
		Lo PR	126	127	130	135.3	128	134	137	142.6	128	141	144	149.0	145	146	149	154.4	150	153	155	159.7	128	158	161	166.3
85	1500	MBh	59.5	60.3	62.0	64.7	58.9	59.8	61.5	64.2	57.4	58.2	60.0	62.6	54.8	55.6	57.3	60.0	51.6	52.4	54.1	56.8	48.6	49.5	51.2	53.9
		S/T	0.86	0.80	0.69	0.6	0.87	0.81	0.69	0.6	0.90	0.83	0.72	0.6	0.93	0.87	0.74	0.6	0.98	0.91	0.78	0.6	1.00	1.00	0.86	0.7
		ΔT	30.99	29.23	25.94	22.5	30.94	29.18	25.89	22.5	31.19	29.43	26.14	22.7	30.92	29.16	25.87	22.5	30.69	28.93	25.63	22.2	29.47	29.97	26.74	23.3
		kW	3.48	3.48	3.48	3.5	3.88	3.88	3.87	3.9	4.32	4.32	4.31	4.3	4.80	4.79	4.79	4.8	5.33	5.32	5.32	5.3	5.95	5.95	5.94	6.0
		Amps	12.06	12.05	12.02	12.1	13.77	13.76	13.73	13.9	15.69	15.67	15.64	15.8	17.76	17.74	17.71	17.8	20.07	20.06	20.03	20.2	22.78	22.77	22.74	22.9
		Hi PR	257	258	259	263.9	297	298	300	304.3	339	340	342	346.6	385	386	388	392.1	434	435	437	441.3	486	487	489	493.7
		Lo PR	115	123	126	131.0	114	130	133	138.3	114	137	140	144.7	114	142	145	150.1	115	142	150	155.4	152	154	157	162.0
	1860	MBh	60.6	61.4	63.2	65.8	60.1	60.9	62.6	65.3	58.5	59.4	61.1	63.8	55.9	56.7	58.5	61.2	52.7	53.5	55.3	57.9	49.8	50.6	52.3	55.0
		S/T	0.99	0.92	0.78	0.6	0.99	0.92	0.79	0.6	1.00	0.95	0.82	0.7	1.00	0.99	0.84	0.7	1.00	1.00	0.88	0.7	1.00	1.00	0.98	0.8
		ΔT	29.23	27.47	24.18	20.8	29.18	27.42	24.13	20.7	28.61	27.67	24.38	21.0	27.33	27.40	24.11	20.7	25.76	26.16	23.88	20.5	24.32	24.73	24.98	21.6
		kW	3.52	3.52	3.51	3.5	3.91	3.91	3.90	3.9	4.35	4.35	4.34	4.4	4.83	4.83	4.82	4.8	5.36	5.36	5.35	5.4	5.99	5.98	5.98	6.0
		Amps	12.21	12.19	12.16	12.3	13.92	13.91	13.88	14.0	15.83	15.82	15.79	15.9	17.90	17.89	17.86	18.0	20.22	20.20	20.17	20.3	22.93	22.92	22.89	23.0
		Hi PR	260	261	263	267.4	300	301	303	307.7	343	344	346	350.0	388	389	391	395.6	437	438	440	444.7	490	491	493	497.1
		Lo PR	115	126	129	133.7	114	133	136	141.0	138	139	142	147.4	143	142	148	152.8	148	150	153	158.1	155	157	160	164.7
	2250	MBh	62.2	63.1	64.8	67.5	61.7	62.5	64.3	67.0	60.2	61.0	62.8	65.4	57.6	58.4	60.1	62.8	54.4	55.2	56.9	59.6	51.4	52.2	54.0	56.7
		S/T	1.00	1.00	0.87	0.7	1.00	1.00	0.87	0.7	1.00	1.00	0.90	0.7	1.00	1.00	0.93	0.8	1.00	1.00	0.98	0.8	1.00	1.00	1.00	0.9
		ΔT	25.15	25.48	22.74	19.3	24.94	25.27	22.69	19.3	24.32	24.65	22.94	19.5	23.26	23.59	22.67	19.3	21.96	22.29	22.43	19.0	20.78	21.11	21.82	20.1
		kW	3.55	3.54	3.54	3.6	3.94	3.94	3.93	4.0	4.38	4.38	4.37	4.4	4.86	4.85	4.85	4.9	5.39	5.39	5.38	5.4	6.01	6.01	6.00	6.0
		Amps	12.33	12.31	12.28	12.4	14.04	14.03	14.00	14.1	15.95	15.94	15.91	16.0	18.02	18.01	17.98	18.1	20.34	20.32	20.29	20.4	23.05	23.04	23.01	23.1
		Hi PR	264	265	266	270.9	304	305	307	311.3	346	347	349	353.6	392	393	395	399.2	441	442	444	448.3	493	494	496	500.7
		Lo PR	127	143	132	137.1	135	143	139	144.4	141	143	146	150.8	147	148	151	156.2	152	153	156	161.5	158	160	167	168.1

IDB: Entering Indoor Dry Bulb Temperature

Shaded area reflects AHRI (TVA) conditions

W = Total system power

High and low pressures are measured at the liquid and suction access fittings.

Amps: Unit amps (comp.+ evaporator + condenser fan motors)

Design Subcooling, 16 - 19 °F @ the liquid access fitting connection ARI 95 test conditions. Design Superheat 8 - 12°F @ the compressor suction access fitting connection.

			Outdoor Ambient Temperature																							
			65				75				85				95				105				115			
			Entering Indoor Wet Bulb Temperature																							
IDB	Airflow	ID WB	59	63	67	71	59	63	67	71	59	63	67	71	59	63	67	71	59	63	67	71	59	63	67	71
70	1800	MBh	69.8	70.7	72.8	-	69.1	70.1	72.2	-	67.3	68.3	70.4	-	64.1	65.1	67.2	-	60.3	61.3	63.4	-	56.8	57.8	59.9	-
		S/T	0.55	0.49	0.39	-	0.55	0.49	0.39	-	0.57	0.51	0.40	-	0.59	0.53	0.42	-	0.62	0.55	0.43	-	0.70	0.63	0.50	-
		ΔT	19.23	17.47	14.18	-	19.18	17.42	14.13	-	19.43	17.67	14.38	-	19.16	17.40	14.11	-	18.93	17.17	13.88	-	20.03	18.27	14.98	-
		kW	4.00	4.00	3.99	-	4.49	4.49	4.48	-	5.04	5.03	5.03	-	5.63	5.63	5.62	-	6.29	6.29	6.28	-	7.06	7.06	7.05	-
		Amps	14.58	14.57	14.53	-	16.71	16.69	16.66	-	19.08	19.07	19.03	-	21.65	21.63	21.60	-	24.52	24.50	24.47	-	27.89	27.87	27.83	-
		Hi PR	268	270	271	-	311	312	314	-	355	356	358	-	403	404	406	-	455	456	458	-	510	511	513	-
		Lo PR	120	121	124	-	127	129	132	-	133	135	138	-	139	140	143	-	144	146	149	-	143	147	155	-
	2100	MBh	70.8	71.8	73.9	-	70.2	71.2	73.3	-	68.3	69.3	71.4	-	65.2	66.2	68.3	-	61.3	62.3	64.4	-	57.8	58.8	60.9	-
		S/T	0.59	0.52	0.40	-	0.59	0.53	0.41	-	0.62	0.55	0.42	-	0.64	0.56	0.44	-	0.67	0.59	0.45	-	0.75	0.67	0.52	-
		ΔT	17.99	16.23	12.94	-	17.95	16.18	12.89	-	18.19	16.43	13.14	-	17.93	16.17	12.87	-	17.69	15.93	12.64	-	18.80	17.03	13.74	-
		kW	4.03	4.03	4.02	-	4.52	4.52	4.51	-	5.07	5.06	5.06	-	5.66	5.66	5.65	-	6.32	6.32	6.31	-	7.09	7.09	7.08	-
		Amps	14.71	14.69	14.66	-	16.84	16.82	16.78	-	19.21	19.19	19.16	-	21.78	21.76	21.72	-	24.65	24.63	24.59	-	28.01	28.00	27.96	-
		Hi PR	271	272	274	-	313	315	316	-	358	359	361	-	406	407	409	-	457	458	460	-	512	513	515	-
		Lo PR	122	123	126	-	129	131	134	-	135	137	140	-	141	142	145	-	146	148	151	-	146	150	157	-
	2700	MBh	73.7	74.7	76.8	-	73.0	74.0	76.1	-	71.2	72.2	74.3	-	68.0	69.0	71.1	-	64.2	65.2	67.3	-	60.7	61.7	63.8	-
		S/T	0.65	0.57	0.43	-	0.65	0.57	0.43	-	0.68	0.60	0.45	-	0.70	0.61	0.46	-	0.73	0.64	0.47	-	0.83	0.73	0.55	-
		ΔT	16.09	14.33	11.03	-	16.04	14.28	10.99	-	16.29	14.53	11.23	-	16.02	14.26	10.97	-	15.79	14.02	10.73	-	16.89	15.13	11.84	-
		kW	4.08	4.07	4.07	-	4.57	4.56	4.56	-	5.11	5.11	5.10	-	5.70	5.70	5.69	-	6.36	6.36	6.35	-	7.14	7.13	7.13	-
		Amps	14.91	14.89	14.85	-	17.03	17.02	16.98	-	19.41	19.39	19.35	-	21.97	21.96	21.92	-	24.84	24.83	24.79	-	28.21	28.19	28.16	-
		Hi PR	276	277	279	-	319	320	322	-	363	364	366	-	411	412	414	-	462	464	465	-	517	519	521	-
		Lo PR	127	128	131	-	134	135	138	-	140	142	145	-	146	147	150	-	150	153	156	-	150	155	162	-
75	1800	MBh	70.1	71.1	73.2	76.4	69.5	70.5	72.6	75.8	67.7	68.7	70.7	74.0	64.5	65.5	67.6	70.8	60.7	61.6	63.7	66.9	57.1	58.1	60.2	63.4
		S/T	0.65	0.59	0.49	0.4	0.66	0.60	0.49	0.4	0.68	0.62	0.51	0.4	0.71	0.64	0.53	0.4	0.74	0.68	0.55	0.4	0.83	0.75	0.62	0.5
		ΔT	23.11	21.34	18.05	14.6	23.06	21.30	18.00	14.6	23.31	21.54	18.25	14.8	23.04	21.28	17.99	14.6	22.81	21.04	17.75	14.3	23.91	22.15	18.85	15.4
		kW	4.00	4.00	3.99	4.0	4.49	4.49	4.48	4.5	5.04	5.03	5.02	5.1	5.63	5.62	5.61	5.7	6.29	6.28	6.27	6.3	7.06	7.06	7.05	7.1
		Amps	14.57	14.55	14.52	14.7	16.69	16.68	16.64	16.8	19.07	19.05	19.01	19.2	21.64	21.62	21.58	21.7	24.51	24.49	24.45	24.6	27.87	27.86	27.82	28.0
		Hi PR	269	270	272	276.4	311	312	314	318.8	355	357	359	363.2	403	404	406	411.0	455	456	458	462.6	510	511	513	517.7
		Lo PR	120	121	124	129.4	127	129	132	136.7	133	135	138	143.1	139	140	143	148.5	139	146	149	153.8	139	150	155	160.5
	2100	MBh	71.2	72.2	74.3	77.5	70.5	71.5	73.6	76.8	68.7	69.7	71.8	75.0	65.5	**66.5**	68.6	71.8	61.7	62.7	64.8	68.0	58.2	59.2	61.3	64.5
		S/T	0.71	0.64	0.52	0.4	0.71	0.65	0.53	0.4	0.74	0.67	0.55	0.4	0.77	**0.70**	0.56	0.4	0.81	0.73	0.59	0.4	0.90	0.82	0.66	0.5
		ΔT	21.87	20.11	16.82	13.4	21.82	20.06	16.77	13.4	22.07	20.31	17.02	13.6	21.80	**20.04**	16.75	13.3	21.57	19.81	16.51	13.1	22.67	20.91	17.62	14.2
		kW	4.03	4.03	4.02	4.1	4.52	4.52	4.51	4.5	5.07	5.06	5.05	5.1	5.66	**5.65**	5.64	5.7	6.32	6.31	6.30	6.3	7.09	7.09	7.08	7.1
		Amps	14.70	14.68	14.64	14.8	16.82	16.81	16.77	16.9	19.20	19.18	19.14	19.3	21.76	**21.75**	21.71	21.9	24.63	24.62	24.58	24.7	28.00	27.98	27.95	28.1
		Hi PR	271	272	274	279.0	314	315	317	321.4	358	359	361	365.8	406	**407**	409	413.7	457	459	461	465.2	513	514	516	520.3
		Lo PR	122	123	126	131.4	129	131	134	138.7	135	137	140	145.1	140	**142**	145	150.5	140	148	151	155.9	139	153	157	162.5
	2700	MBh	74.0	75.0	77.1	80.3	73.4	74.4	76.5	79.7	71.6	72.6	74.7	77.9	68.4	69.4	71.5	74.7	64.6	65.5	67.6	70.8	61.0	62.0	64.1	67.3
		S/T	0.80	0.72	0.57	0.4	0.81	0.72	0.58	0.4	0.84	0.75	0.60	0.4	0.86	0.78	0.62	0.5	0.90	0.81	0.64	0.5	1.00	0.91	0.73	0.5
		ΔT	19.96	18.20	14.91	11.5	19.92	18.15	14.86	11.5	20.16	18.40	15.11	11.7	19.90	18.14	14.84	11.4	19.66	17.90	14.61	11.2	20.55	19.00	15.71	12.3
		kW	4.08	4.07	4.06	4.1	4.56	4.56	4.55	4.6	5.11	5.11	5.10	5.1	5.70	5.70	5.69	5.7	6.36	6.36	6.35	6.4	7.14	7.13	7.12	7.2
		Amps	14.89	14.88	14.84	15.0	17.02	17.00	16.97	17.1	19.39	19.38	19.34	19.5	21.96	21.94	21.91	22.1	24.83	24.81	24.78	24.9	28.20	28.18	28.14	28.3
		Hi PR	276	278	279	284.2	319	320	322	326.6	363	364	366	371.0	411	412	414	418.8	463	464	466	470.4	518	519	521	525.4
		Lo PR	127	128	131	136.3	134	135	139	143.6	139	142	145	150.0	139	147	150	155.4	139	153	156	160.7	140	159	162	167.4

IDB: Entering Indoor Dry Bulb Temperature

Shaded area reflects AHRI (TVA) conditions

W = Total system power

High and low pressures are measured at the liquid and suction access fittings.

Amps: Unit amps (comp.+ evaporator + condenser fan motors)

Design Subcooling, 16 - 19 °F @ the liquid access fitting connection ARI 95 test conditions. Design Superheat 8 - 12°F @ the compressor suction access fitting connection.

			Outdoor Ambient Temperature																							
			65				75				85				95				105				115			
			Entering Indoor Wet Bulb Temperature																							
IDB	Airflow	ID WB	59	63	67	71	59	63	67	71	59	63	67	71	59	63	67	71	59	63	67	71	59	63	67	71
80	1800	MBh	70.5	71.5	73.6	76.8	69.9	70.8	72.9	76.1	68.0	69.0	71.1	74.3	64.9	65.9	68.0	71.2	61.0	62.0	64.1	67.3	57.5	58.5	60.6	63.8
		S/T	0.76	0.70	0.59	0.5	0.76	0.70	0.59	0.5	0.79	0.73	0.62	0.5	0.82	0.76	0.64	0.5	0.87	0.80	0.67	0.5	0.96	0.88	0.74	0.6
		ΔT	27.01	25.25	21.95	18.5	26.96	25.20	21.91	18.5	27.21	25.45	22.15	18.7	26.94	25.18	21.89	18.5	26.71	24.94	21.65	18.2	27.81	26.05	22.76	19.3
		kW	4.00	4.00	3.99	4.0	4.49	4.49	4.48	4.5	5.04	5.03	5.03	5.1	5.63	5.63	5.62	5.7	6.29	6.28	6.28	6.3	7.06	7.06	7.05	7.1
		Amps	14.58	14.56	14.53	14.7	16.71	16.69	16.65	16.8	19.08	19.06	19.03	19.2	21.65	21.63	21.59	21.8	24.52	24.50	24.46	24.6	27.88	27.87	27.83	28.0
		Hi PR	269	270	272	276.9	312	313	315	319.3	356	357	359	363.7	404	405	407	411.5	455	457	458	463.1	510	512	513	518.1
		Lo PR	120	122	125	130.0	128	129	132	137.3	128	135	139	143.7	128	141	144	149.1	128	146	149	154.4	128	152	156	161.0
	2100	MBh	71.5	72.5	74.6	77.8	70.9	71.9	74.0	77.2	69.1	70.1	72.2	75.4	65.9	66.9	**69.0**	72.2	62.1	63.0	65.1	68.3	58.5	59.5	61.6	64.8
		S/T	0.83	0.76	0.64	0.5	0.84	0.77	0.65	0.5	0.87	0.80	0.67	0.5	0.90	0.83	**0.69**	0.6	0.95	0.87	0.72	0.6	1.00	0.96	0.81	0.6
		ΔT	25.77	24.01	20.72	17.3	25.72	23.96	20.67	17.3	25.97	24.21	20.92	17.5	25.71	23.94	**20.65**	17.2	25.47	23.71	20.42	17.0	25.34	24.81	21.52	18.1
		kW	4.03	4.03	4.02	4.1	4.52	4.52	4.51	4.5	5.07	5.06	5.06	5.1	5.66	5.65	**5.65**	5.7	6.32	6.31	6.31	6.3	7.09	7.09	7.08	7.1
		Amps	14.71	14.69	14.66	14.8	16.83	16.82	16.78	16.9	19.21	19.19	19.15	19.3	21.78	21.76	**21.72**	21.9	24.64	24.63	24.59	24.8	28.01	27.99	27.96	28.1
		Hi PR	272	273	275	279.5	314	315	317	321.9	359	360	362	366.3	406	408	**409**	414.2	458	459	461	465.7	513	514	516	520.8
		Lo PR	122	124	127	132.0	127	131	134	139.3	128	138	141	145.7	127	143	**146**	151.1	127	148	151	156.4	127	152	158	163.0
	2700	MBh	74.4	75.4	77.5	80.7	73.8	74.8	76.9	80.1	71.9	72.9	75.0	78.2	68.8	69.8	71.9	75.1	64.9	65.9	68.0	71.2	61.4	62.4	64.5	67.7
		S/T	0.95	0.87	0.72	0.6	0.96	0.88	0.73	0.6	0.99	0.91	0.75	0.6	1.00	0.94	0.77	0.6	1.00	0.98	0.81	0.6	1.00	1.00	0.90	0.7
		ΔT	23.87	22.10	18.81	15.4	23.82	22.06	18.76	15.4	24.07	22.30	19.01	15.6	23.16	22.04	18.75	15.3	21.86	21.80	18.51	15.1	20.67	21.01	19.61	16.2
		kW	4.08	4.07	4.07	4.1	4.57	4.56	4.55	4.6	5.11	5.11	5.10	5.1	5.70	5.70	5.69	5.7	6.36	6.36	6.35	6.4	7.14	7.13	7.13	7.2
		Amps	14.90	14.89	14.85	15.0	17.03	17.01	16.98	17.1	19.40	19.39	19.35	19.5	21.97	21.95	21.92	22.1	24.84	24.82	24.79	25.0	28.21	28.19	28.15	28.3
		Hi PR	277	278	280	284.6	319	320	322	327.1	364	365	367	371.5	412	413	415	419.3	463	464	466	470.9	518	519	521	525.9
		Lo PR	127	129	132	136.9	128	136	139	144.2	128	142	145	150.5	146	148	151	156.0	152	152	156	161.3	158	152	163	167.9
85	1800	MBh	71.7	72.7	74.8	78.0	71.0	72.0	74.1	77.3	69.2	70.2	72.3	75.5	66.1	67.0	69.1	72.3	62.2	63.2	65.3	68.5	58.7	59.7	61.8	65.0
		S/T	0.84	0.78	0.67	0.6	0.85	0.79	0.68	0.6	0.88	0.82	0.70	0.6	0.91	0.85	0.73	0.6	0.96	0.89	0.76	0.6	1.00	0.98	0.84	0.7
		ΔT	30.47	28.71	25.42	22.0	30.42	28.66	25.37	22.0	30.67	28.91	25.62	22.2	30.40	28.64	25.35	21.9	30.17	28.40	25.11	21.7	29.64	29.51	26.22	22.8
		kW	4.01	4.01	4.00	4.0	4.50	4.50	4.49	4.5	5.05	5.04	5.04	5.1	5.64	5.63	5.63	5.7	6.30	6.29	6.29	6.3	7.07	7.07	7.06	7.1
		Amps	14.62	14.60	14.57	14.7	16.75	16.73	16.69	16.9	19.12	19.10	19.07	19.2	21.69	21.67	21.63	21.8	24.56	24.54	24.50	24.7	27.92	27.91	27.87	28.0
		Hi PR	270	272	273	278.1	313	314	316	320.5	357	358	360	365.0	405	406	408	412.8	457	458	460	464.4	512	513	515	519.4
		Lo PR	114	124	127	131.8	115	131	134	139.1	115	137	140	145.5	115	141	146	150.9	115	142	151	156.2	153	142	158	162.8
	2100	MBh	72.7	73.7	75.8	79.0	72.1	73.1	75.2	78.4	70.2	71.2	73.3	76.5	67.1	68.1	70.2	73.4	63.2	64.2	66.3	69.5	59.7	60.7	62.8	66.0
		S/T	0.93	0.86	0.74	0.6	0.94	0.87	0.74	0.6	0.97	0.90	0.77	0.6	1.00	0.93	0.79	0.7	1.00	0.98	0.83	0.7	1.00	1.00	0.92	0.8
		ΔT	29.23	27.47	24.18	20.8	29.18	27.42	24.13	20.7	29.43	27.67	24.38	21.0	29.04	27.40	24.11	20.7	27.38	27.17	23.88	20.5	25.85	26.28	24.98	21.6
		kW	4.04	4.04	4.03	4.1	4.53	4.53	4.52	4.6	5.08	5.07	5.06	5.1	5.67	5.66	5.66	5.7	6.33	6.32	6.32	6.4	7.10	7.10	7.09	7.1
		Amps	14.75	14.73	14.70	14.9	16.87	16.86	16.82	17.0	19.25	19.23	19.19	19.4	21.82	21.80	21.76	21.9	24.69	24.67	24.63	24.8	28.05	28.03	28.00	28.2
		Hi PR	273	274	276	280.8	315	317	318	323.2	360	361	363	367.6	408	409	411	415.4	459	460	462	467.0	514	515	517	522.0
		Lo PR	115	126	129	133.8	115	133	136	141.1	114	139	142	147.5	143	142	148	152.9	149	142	153	158.2	155	157	160	164.8
	2700	MBh	75.6	76.6	78.7	81.9	74.9	75.9	78.0	81.2	73.1	74.1	76.2	79.4	70.0	70.9	73.0	76.2	66.1	67.1	69.2	72.4	62.6	63.6	65.7	68.9
		S/T	1.00	0.99	0.84	0.7	1.00	1.00	0.85	0.7	1.00	1.00	0.88	0.7	1.00	1.00	0.90	0.7	1.00	1.00	0.94	0.8	1.00	1.00	1.00	0.8
		ΔT	25.45	25.56	22.27	18.9	25.23	25.52	22.22	18.8	24.62	24.95	22.47	19.1	23.55	23.89	22.21	18.8	22.26	22.59	21.97	18.6	21.07	21.41	22.11	19.7
		kW	4.09	4.08	4.08	4.1	4.58	4.57	4.56	4.6	5.12	5.12	5.11	5.1	5.71	5.71	5.70	5.7	6.37	6.37	6.36	6.4	7.15	7.14	7.13	7.2
		Amps	14.94	14.93	14.89	15.1	17.07	17.05	17.02	17.2	19.44	19.43	19.39	19.6	22.01	22.00	21.96	22.1	24.88	24.86	24.83	25.0	28.25	28.23	28.19	28.4
		Hi PR	278	279	281	285.9	321	322	324	328.3	365	366	368	372.7	413	414	416	420.6	464	466	467	472.2	519	521	523	527.2
		Lo PR	129	130	134	138.6	136	138	141	146.0	143	144	147	152.3	148	150	153	157.8	153	155	158	163.1	160	162	167	169.7

IDB: Entering Indoor Dry Bulb Temperature Shaded area reflects AHRI (TVA) conditions **W = Total system power**

High and low pressures are measured at the liquid and suction access fittings. **Amps: Unit amps (comp.+ evaporator + condenser fan motors)**

Design Subcooling, 16 - 19 °F @ the liquid access fitting connection ARI 95 test conditions. Design Superheat 8 - 12°F @ the compressor suction access fitting connection.

			Outdoor Ambient Temperature																							
			65				75				85				95				105				115			
			Entering Indoor Wet Bulb Temperature																							
IDB	Airflow	ID WB	59	63	67	71	59	63	67	71	59	63	67	71	59	63	67	71	59	63	67	71	59	63	67	71
70	1260	MBh	50.4	51.1	52.6	-	49.9	50.6	52.2	-	48.6	49.3	50.8	-	46.4	47.1	48.6	-	43.6	44.3	45.8	-	41.0	41.8	43.3	-
		S/T	0.51	0.46	0.36	-	0.51	0.46	0.36	-	0.53	0.48	0.38	-	0.55	0.49	0.39	-	0.58	0.52	0.41	-	0.65	0.59	0.46	-
		ΔT	18.56	16.86	13.68	-	18.51	16.81	13.63	-	18.75	17.05	13.87	-	18.49	16.79	13.62	-	18.27	16.57	13.39	-	19.33	17.63	14.45	-
		kW	2.52	2.52	2.51	-	2.83	2.82	2.82	-	3.17	3.17	3.16	-	3.54	3.54	3.53	-	3.96	3.95	3.95	-	4.44	4.44	4.44	-
		Amps	9.17	9.16	9.14	-	10.51	10.50	10.48	-	12.00	11.99	11.97	-	13.62	13.61	13.58	-	15.42	15.41	15.39	-	17.54	17.53	17.51	-
		Hi PR	257	258	260	-	297	298	300	-	340	341	343	-	385	386	388	-	435	436	438	-	487	488	490	-
		Lo PR	123	125	128	-	131	132	135	-	137	139	142	-	143	144	147	-	147	150	153	-	145	149	157	-
	1470	MBh	51.1	51.8	53.4	-	50.7	51.4	52.9	-	49.4	50.1	51.6	-	47.1	47.8	49.3	-	44.3	45.0	46.5	-	41.8	42.5	44.0	-
		S/T	0.55	0.49	0.38	-	0.55	0.49	0.38	-	0.58	0.51	0.40	-	0.59	0.53	0.41	-	0.62	0.55	0.42	-	0.70	0.63	0.49	-
		ΔT	17.37	15.66	12.49	-	17.32	15.62	12.44	-	17.56	15.86	12.68	-	17.30	15.60	12.42	-	17.07	15.37	12.20	-	18.14	16.44	13.26	-
		kW	2.54	2.53	2.53	-	2.84	2.84	2.84	-	3.19	3.19	3.18	-	3.56	3.56	3.55	-	3.97	3.97	3.97	-	4.46	4.46	4.45	-
		Amps	9.25	9.24	9.22	-	10.59	10.58	10.56	-	12.08	12.07	12.05	-	13.70	13.69	13.66	-	15.50	15.49	15.47	-	17.62	17.61	17.59	-
		Hi PR	259	260	262	-	300	301	303	-	342	343	345	-	388	389	391	-	437	438	440	-	490	491	493	-
		Lo PR	125	127	130	-	133	134	137	-	139	141	144	-	145	146	149	-	150	152	155	-	148	152	160	-
	1890	MBh	53.2	53.9	55.4	-	52.7	53.5	55.0	-	51.4	52.1	53.6	-	49.2	49.9	51.4	-	46.4	47.1	48.6	-	43.9	44.6	46.1	-
		S/T	0.61	0.53	0.40	-	0.61	0.54	0.40	-	0.64	0.56	0.42	-	0.65	0.57	0.43	-	0.68	0.60	0.44	-	0.77	0.68	0.52	-
		ΔT	15.53	13.82	10.65	-	15.48	13.78	10.60	-	15.72	14.02	10.84	-	15.46	13.76	10.58	-	15.23	13.53	10.36	-	16.30	14.60	11.42	-
		kW	2.57	2.56	2.56	-	2.87	2.87	2.87	-	3.22	3.21	3.21	-	3.59	3.59	3.58	-	4.00	4.00	4.00	-	4.49	4.49	4.48	-
		Amps	9.38	9.37	9.34	-	10.71	10.70	10.68	-	12.21	12.20	12.17	-	13.82	13.81	13.79	-	15.63	15.62	15.59	-	17.74	17.73	17.71	-
		Hi PR	264	265	267	-	305	306	307	-	347	348	350	-	393	394	396	-	442	443	445	-	495	496	498	-
		Lo PR	130	132	135	-	138	139	142	-	144	146	149	-	150	151	154	-	150	157	160	-	149	157	167	-
75	1260	MBh	50.4	51.1	52.6	54.9	50.0	50.7	52.2	54.5	48.6	49.4	50.9	53.2	46.4	47.1	48.6	50.9	43.6	44.3	45.8	48.1	41.1	41.8	43.3	45.6
		S/T	0.61	0.56	0.46	0.4	0.62	0.56	0.46	0.4	0.64	0.58	0.48	0.4	0.66	0.60	0.49	0.4	0.70	0.63	0.52	0.4	0.78	0.71	0.58	0.5
		ΔT	22.30	20.60	17.42	14.1	22.25	20.55	17.37	14.1	22.49	20.79	17.61	14.3	22.23	20.53	17.36	14.1	22.01	20.31	17.13	13.8	23.07	21.37	18.19	14.9
		kW	2.52	2.51	2.51	2.5	2.82	2.82	2.82	2.8	3.17	3.16	3.16	3.2	3.54	3.54	3.53	3.6	3.95	3.95	3.95	4.0	4.44	4.44	4.43	4.5
		Amps	9.16	9.15	9.13	9.2	10.50	10.49	10.47	10.6	11.99	11.98	11.96	12.1	13.61	13.60	13.58	13.7	15.41	15.40	15.38	15.5	17.53	17.52	17.50	17.6
		Hi PR	257	258	260	264.2	297	298	300	304.7	340	341	343	347.2	386	387	388	392.9	435	436	438	442.3	487	489	490	494.9
		Lo PR	123	125	128	133.1	131	132	135	140.6	137	139	142	147.1	139	144	147	152.7	139	150	153	158.2	139	153	160	165.0
	1470	MBh	51.2	51.9	53.4	55.7	50.7	51.4	52.9	55.2	49.4	50.1	51.6	53.9	47.1	47.8	49.3	51.7	44.4	45.1	46.6	48.9	41.8	42.5	44.0	46.4
		S/T	0.67	0.60	0.49	0.4	0.67	0.61	0.49	0.4	0.70	0.63	0.51	0.4	0.72	0.65	0.53	0.4	0.76	0.69	0.55	0.4	0.85	0.77	0.62	0.5
		ΔT	21.11	19.40	16.23	12.9	21.06	19.36	16.18	12.9	21.30	19.60	16.42	13.1	21.04	19.34	16.16	12.9	20.81	19.11	15.94	12.6	21.88	20.18	17.00	13.7
		kW	2.54	2.53	2.53	2.6	2.84	2.84	2.83	2.9	3.19	3.18	3.18	3.2	3.56	3.56	3.55	3.6	3.97	3.97	3.96	4.0	4.46	4.46	4.45	4.5
		Amps	9.24	9.23	9.21	9.3	10.58	10.57	10.55	10.7	12.07	12.06	12.04	12.1	13.69	13.68	13.66	13.8	15.49	15.48	15.46	15.6	17.61	17.60	17.58	17.7
		Hi PR	259	260	262	266.7	300	301	303	307.3	342	343	345	349.7	388	389	391	395.5	437	438	440	444.8	490	491	493	497.4
		Lo PR	125	127	130	135.1	133	134	137	142.6	139	141	144	149.2	140	146	150	154.8	139	152	155	160.2	139	156	162	167.0
	1890	MBh	53.2	53.9	55.4	57.7	52.8	53.5	55.0	57.3	51.5	52.2	53.7	56.0	49.2	49.9	51.4	53.7	46.4	47.1	48.6	50.9	43.9	44.6	46.1	48.4
		S/T	0.75	0.68	0.54	0.4	0.76	0.68	0.54	0.4	0.79	0.71	0.56	0.4	0.81	0.73	0.58	0.4	0.85	0.76	0.60	0.4	0.95	0.85	0.68	0.5
		ΔT	19.27	17.56	14.39	11.1	19.22	17.52	14.34	11.1	19.46	17.76	14.58	11.3	19.20	17.50	14.32	11.0	18.97	17.27	14.10	10.8	20.04	18.34	15.16	11.9
		kW	2.56	2.56	2.56	2.6	2.87	2.87	2.86	2.9	3.21	3.21	3.21	3.2	3.59	3.58	3.58	3.6	4.00	4.00	3.99	4.0	4.49	4.49	4.48	4.5
		Amps	9.37	9.36	9.33	9.4	10.70	10.69	10.67	10.8	12.20	12.19	12.16	12.3	13.81	13.80	13.78	13.9	15.62	15.61	15.58	15.7	17.74	17.72	17.70	17.8
		Hi PR	264	265	267	271.6	305	306	308	312.2	347	348	350	354.7	393	394	396	400.4	442	443	445	449.7	495	496	498	502.3
		Lo PR	130	132	135	140.1	138	139	142	147.6	139	146	149	154.2	139	151	155	159.8	140	157	160	165.2	139	161	167	172.1

IDB: Entering Indoor Dry Bulb Temperature

Shaded area reflects AHRI (TVA) conditions

W = Total system power

High and low pressures are measured at the liquid and suction access fittings.

Amps: Unit amps (comp.+ evaporator + condenser fan motors)

Design Subcooling, 16 - 19 °F @ the liquid access fitting connection ARI 95 test conditions. Design Superheat 8 - 12°F @ the compressor suction access fitting connection.

			Outdoor Ambient Temperature																							
			65				75				85				95				105				115			
			Entering Indoor Wet Bulb Temperature																							
IDB	Airflow	ID WB	59	63	67	71	59	63	67	71	59	63	67	71	59	63	67	71	59	63	67	71	59	63	67	71
80	1260	MBh	50.7	51.4	52.9	55.2	50.2	50.9	52.4	54.8	48.9	49.6	51.1	53.4	46.6	47.4	48.9	51.2	43.9	44.6	46.1	48.4	41.3	42.1	43.6	45.9
		S/T	0.71	0.66	0.56	0.4	0.72	0.66	0.56	0.5	0.74	0.69	0.58	0.5	0.77	0.71	0.60	0.5	0.81	0.75	0.63	0.5	0.90	0.83	0.70	0.6
		ΔT	26.06	24.36	21.19	17.9	26.02	24.32	21.14	17.8	26.26	24.56	21.38	18.1	26.00	24.30	21.12	17.8	25.77	24.07	20.90	17.6	26.84	25.14	21.96	18.7
		kW	2.52	2.52	2.51	2.5	2.83	2.82	2.82	2.8	3.17	3.17	3.16	3.2	3.54	3.54	3.53	3.6	3.96	3.95	3.95	4.0	4.44	4.44	4.44	4.5
		Amps	9.17	9.16	9.14	9.2	10.51	10.50	10.47	10.6	12.00	11.99	11.97	12.1	13.62	13.61	13.58	13.7	15.42	15.41	15.39	15.5	17.54	17.53	17.51	17.6
		Hi PR	257	258	260	264.7	298	299	301	305.2	340	341	343	347.7	386	387	389	393.4	435	436	438	442.7	488	489	491	495.3
		Lo PR	124	125	128	133.6	127	133	136	141.1	127	139	142	147.7	128	145	148	153.2	128	150	153	158.7	127	152	160	165.5
	1470	MBh	51.4	52.1	53.6	56.0	51.0	51.7	53.2	55.5	49.7	50.4	51.9	54.2	47.4	48.1	**49.6**	51.9	44.6	45.3	46.8	49.1	42.1	42.8	44.3	46.6
		S/T	0.78	0.72	0.60	0.5	0.79	0.72	0.61	0.5	0.82	0.75	0.63	0.5	0.85	0.78	**0.65**	0.5	0.89	0.82	0.68	0.5	0.99	0.90	0.76	0.6
		ΔT	24.87	23.17	19.99	16.7	24.82	23.12	19.95	16.7	25.06	23.36	20.19	16.9	24.81	23.11	**19.93**	16.6	24.58	22.88	19.70	16.4	25.64	23.94	20.77	17.5
		kW	2.54	2.53	2.53	2.6	2.84	2.84	2.84	2.9	3.19	3.19	3.18	3.2	3.56	3.56	**3.55**	3.6	3.97	3.97	3.97	4.0	4.46	4.46	4.45	4.5
		Amps	9.25	9.24	9.22	9.3	10.59	10.58	10.56	10.7	12.08	12.07	12.05	12.2	13.70	13.69	**13.66**	13.8	15.50	15.49	15.47	15.6	17.62	17.61	17.59	17.7
		Hi PR	260	261	263	267.2	300	301	303	307.7	343	344	346	350.2	389	390	**391**	395.9	438	439	441	445.2	490	492	493	497.9
		Lo PR	126	127	130	135.7	128	135	138	143.2	128	141	144	149.8	127	147	**150**	155.3	127	152	156	160.8	128	153	162	167.6
	1890	MBh	53.5	54.2	55.7	58.0	53.0	53.7	55.3	57.6	51.7	52.4	53.9	56.2	49.4	50.2	51.7	54.0	46.7	47.4	48.9	51.2	44.1	44.9	46.4	48.7
		S/T	0.90	0.82	0.68	0.5	0.90	0.82	0.68	0.5	0.93	0.85	0.71	0.6	0.97	0.88	0.73	0.6	1.00	0.92	0.76	0.6	1.00	1.00	0.85	0.7
		ΔT	23.03	21.33	18.15	14.9	22.98	21.28	18.11	14.8	23.22	21.52	18.35	15.1	22.97	21.27	18.09	14.8	22.45	21.04	17.86	14.6	21.24	21.58	18.93	15.6
		kW	2.57	2.56	2.56	2.6	2.87	2.87	2.86	2.9	3.22	3.21	3.21	3.2	3.59	3.59	3.58	3.6	4.00	4.00	3.99	4.0	4.49	4.49	4.48	4.5
		Amps	9.37	9.36	9.34	9.4	10.71	10.70	10.68	10.8	12.20	12.19	12.17	12.3	13.82	13.81	13.79	13.9	15.62	15.61	15.59	15.7	17.74	17.73	17.71	17.8
		Hi PR	265	266	268	272.1	305	306	308	312.7	348	349	351	355.1	393	395	396	400.9	443	444	446	450.2	495	497	498	502.8
		Lo PR	128	132	135	140.7	128	140	143	148.2	128	146	150	154.8	127	152	155	160.3	156	152	161	165.8	163	164	167	172.6
85	1260	MBh	51.5	52.2	53.7	56.1	51.1	51.8	53.3	55.6	49.8	50.5	52.0	54.3	47.5	48.2	49.7	52.0	44.7	45.4	46.9	49.2	42.2	42.9	44.4	46.7
		S/T	0.79	0.73	0.63	0.5	0.80	0.74	0.64	0.5	0.82	0.77	0.66	0.5	0.86	0.79	0.68	0.6	0.90	0.84	0.72	0.6	0.99	0.92	0.79	0.7
		ΔT	29.40	27.70	24.53	21.2	29.36	27.66	24.48	21.2	29.60	27.89	24.72	21.4	29.34	27.64	24.46	21.2	29.11	27.41	24.23	20.9	30.18	28.48	25.30	22.0
		kW	2.52	2.52	2.52	2.5	2.83	2.83	2.82	2.8	3.17	3.17	3.17	3.2	3.55	3.54	3.54	3.6	3.96	3.96	3.95	4.0	4.45	4.45	4.44	4.5
		Amps	9.20	9.19	9.16	9.3	10.53	10.52	10.50	10.6	12.03	12.02	11.99	12.1	13.64	13.63	13.61	13.7	15.45	15.44	15.41	15.5	17.56	17.55	17.53	17.6
		Hi PR	258	260	261	265.9	299	300	302	306.4	341	343	344	348.9	387	388	390	394.6	437	438	439	443.9	489	490	492	496.6
		Lo PR	115	127	130	135.5	115	135	138	143.0	115	141	144	149.5	115	141	150	155.1	114	142	155	160.5	115	142	162	167.4
	1470	MBh	52.3	53.0	54.5	56.8	51.8	52.5	54.0	56.3	50.5	51.2	52.7	55.0	48.2	49.0	50.5	52.8	45.5	46.2	47.7	50.0	42.9	43.7	45.2	47.5
		S/T	0.87	0.81	0.69	0.6	0.88	0.81	0.70	0.6	0.91	0.84	0.72	0.6	0.94	0.87	0.75	0.6	0.99	0.92	0.78	0.6	1.00	1.00	0.86	0.7
		ΔT	28.21	26.51	23.33	20.0	28.16	26.46	23.29	20.0	28.40	26.70	23.53	20.2	28.15	26.45	23.27	20.0	27.92	26.22	23.04	19.8	26.55	27.00	24.11	20.8
		kW	2.54	2.54	2.53	2.6	2.85	2.85	2.84	2.9	3.19	3.19	3.19	3.2	3.56	3.56	3.56	3.6	3.98	3.98	3.97	4.0	4.47	4.46	4.46	4.5
		Amps	9.28	9.27	9.24	9.3	10.61	10.60	10.58	10.7	12.11	12.10	12.07	12.2	13.72	13.71	13.69	13.8	15.53	15.52	15.49	15.6	17.64	17.63	17.61	17.7
		Hi PR	261	262	264	268.4	302	303	304	308.9	344	345	347	351.4	390	391	393	397.1	439	440	442	446.4	492	493	495	499.1
		Lo PR	115	129	132	137.5	114	137	140	145.0	114	142	146	151.6	115	142	152	157.2	115	141	157	162.6	160	161	164	169.4
	1890	MBh	54.3	55.0	56.6	58.9	53.9	54.6	56.1	58.4	52.6	53.3	54.8	57.1	50.3	51.0	52.5	54.8	47.5	48.2	49.7	52.1	45.0	45.7	47.2	49.5
		S/T	1.00	0.93	0.79	0.6	1.00	0.94	0.79	0.6	1.00	0.97	0.82	0.7	1.00	1.00	0.85	0.7	1.00	1.00	0.89	0.7	1.00	1.00	0.98	0.8
		ΔT	26.14	24.67	21.49	18.2	25.92	24.62	21.45	18.2	25.28	24.86	21.69	18.4	24.19	24.54	21.43	18.1	22.86	23.20	21.20	17.9	21.64	21.99	22.27	19.0
		kW	2.57	2.57	2.56	2.6	2.88	2.88	2.87	2.9	3.22	3.22	3.21	3.2	3.59	3.59	3.59	3.6	4.01	4.01	4.00	4.0	4.50	4.49	4.49	4.5
		Amps	9.40	9.39	9.37	9.5	10.74	10.73	10.70	10.8	12.23	12.22	12.20	12.3	13.85	13.84	13.81	13.9	15.65	15.64	15.62	15.7	17.77	17.76	17.73	17.8
		Hi PR	266	267	269	273.3	306	308	309	313.9	349	350	352	356.3	395	396	398	402.1	444	445	447	451.4	497	498	500	504.0
		Lo PR	133	134	137	142.5	140	142	145	150.0	147	142	151	156.6	152	154	157	162.2	158	159	162	167.6	165	166	165	174.5

IDB: Entering Indoor Dry Bulb Temperature

Shaded area reflects AHRI (TVA) conditions

W = Total system power

High and low pressures are measured at the liquid and suction access fittings.

Amps: Unit amps (comp.+ evaporator + condenser fan motors)

Design Subcooling, 16 - 19 °F @ the liquid access fitting connection ARI 95 test conditions. Design Superheat 8 - 12°F @ the compressor suction access fitting connection.

Heating

Heating Rating Table - Natural Gas and Propane

DSG	PHASE	GAS HEAT	STAGE 1 INPUT/ OUTPUT (MBH)	STAGE 2 INPUT/ OUTPUT (MBH)	TEMP RISE HIGH (ºF)	TEMP RISE LOW (ºF)	AFUE (%)	THERMAL EFFICIENCY (%)
DFG036	Single Phase	Low	45.0 / 36.5	N/A	15-45	N/A	81	--
		High	90.0 / 72.9	N/A	25-55	N/A	81	--
	3-Phase	Low	45.0 / 36.0	33.8 / 27.0	15-45	10-40	--	80
		Medium	70.0 / 56.0	52.5 / 42.0	25-55	20-50	--	80
		High	90.0 / 72.0	67.5 / 54.0	25-55	20-50	--	80
DFG048	Single Phase	Low	90.0 / 72.9	N/A	25-55	N/A	81	--
		High	115.0/93.2	N/A	30-60	N/A	81	--
	3-Phase	Low	70.0/56.0	52.5 / 42.0	25-55	20-50	--	80
		Medium	90.0 / 72.0	67.5 / 54.0	25-55	20-50	--	80
		High	115.0 / 92.0	86.3 / 69.0	30-60	25-55	--	80
DFG060	Single Phase	Low	90.0/72.9	N/A	30-60	N/A	81	--
		High	140.0/113.4	N/A	35-65	N/A	81	--
	3-Phase	Low	90.0 / 72.0	67.5 / 54.0	30-60	25-55	--	80
		Medium	115.0 / 92.0	86.3 / 69.0	45-75	40-70	--	80
		High	140.0 /112.0	105.0 / 84.0	35-65	35-65	--	80
DFG072	3-Phase	Low	90.0 / 72.0	67.5 / 54.0	25-55	20-50	--	80
		Medium	115.0 / 92.0	86.3 / 69.0	25-55	20-50	--	80
		High	140.0 /112.0	105.0 / 84.0	35-65	30-60	--	80

Heat Exchanger and Burner Orifice Specifications

DFG	High Fire Rate Btu/Hr	Number of Burners	NG Orifice	LP Orifice
DSG036	45,000	2	43	55
	70,000	3	43	55
	90,000	4	43	55
DSG048	70,000	3	43	55
	90,000	4	43	55
	115,000	5	43	55
DSG060	90,000	4	43	55
	115,000	5	43	55
	140,000	6	43	55
DSG072	90,000	4	43	55
	115,000	5	43	55
	140,000	6	43	55

ULN Heat Exchanger and Burner Orifice Specifications

Ton	High Fire Rate	Number of Burners	NG Orifice
DSG036	60,000	3	24
	80,000	4	17
	100,000	5	11
DSG048	80,000	4	17
	100,000	5	11
DSG060	80,000	4	17
	100,000	5	11

Min-Max Airflow Range

DFG	High Fire Rate Btu/Hr	Heating Minimum Scfm	Cooling Minimum Scfm	Maximum Scfm
DSG036	45000	750	900	1500
	60000	750		
	70000	1050		
	80000	950		
	90000	1200		
	100000	1050		
DSG048	70000	950	1200	2000
	80000	1050		
	90000	1200		
	100000	1150		
	115000	1400		
DSG060	80000	1200	1500	2500
	90000	1100		
	100000	1250		
	115000	1150		
	140000	1600		
DSG072	90000	1200	1800	3000
	115000	1550		
	140000	1600		

ULN Heating Rating Table

DSG	PHASE	GAS HEAT	STAGE 1 INPUT/ OUTPUT (MBH)	STAGE 2 INPUT/ OUTPUT (MBH)	TEMP RISE HIGH (ºF)	TEMP RISE LOW (ºF)	AFUE (%)	THERMAL EFFICIENCY (%)
DSG036	Single Phase	Low	60.0/48.6	--	30-60	--	81	--
		Medium	80.0/64.8	--	30-60	--	81	--
		High	100.0/81.0	--	40-70	--	81	--
	3-Phase	Low	60.0/48.0	--	30-60	--	--	80
		Medium	80.0/64.0	--	30-60	--	--	80
		High	100.0/80.0	--	40-70	--	--	80
DSG048	Single Phase	Medium	80.0/64.8	--	25-55	--	81	--
		High	100.0/81.0	--	35-65	--	81	--
	3-Phase	Medium	80.0/64.0	--	25-55	--	--	80
		High	100.0/80.0	--	35-65	--	--	80
DSG060	Single Phase	Medium	80.0/64.8	--	20-50	--	81	--
		High	100.0/81.0	--	30-60	--	81	--
	3-Phase	Medium	80.0/64.0	--	20-50	--	--	80
		High	100.0/80.0	--	30-60	--	--	80

DSG0361D 45K DOWNSHOT

SPEED TAP	EXTERNAL STATIC PRESSURE (ESP) IN W. C.	AIRFLOW (CFM)	RPM	WATTS	BHP
T1 *	0.1	1060	535	115	0.11
	0.2	945	570	117	0.11
	0.3	875	615	125	0.12
	0.4	795	665	134	0.13
	0.5	735	710	142	0.14
	0.6	640	760	155	0.15
	0.7	-	-	-	-
	0.8	-	-	-	-
T2	0.1	1405	650	224	0.23
	0.2	1340	685	231	0.24
	0.3	1290	715	241	0.26
	0.4	1235	750	251	0.27
	0.5	1180	790	264	0.28
	0.6	1120	830	273	0.30
	0.7	1055	865	284	0.31
	0.8	1000	895	294	0.32
T3 **	0.1	1280	605	180	0.18
	0.2	1205	640	187	0.19
	0.3	1145	680	196	0.20
	0.4	1080	725	206	0.22
	0.5	1025	765	217	0.23
	0.6	955	805	226	0.24
	0.7	885	845	237	0.25
	0.8	820	875	247	0.26
T4	0.1	1470	670	251	0.26
	0.2	1420	705	261	0.28
	0.3	1365	740	272	0.29
	0.4	1315	775	283	0.30
	0.5	1265	810	296	0.32
	0.6	1205	845	304	0.33
	0.7	1145	880	316	0.35
	0.8	1090	905	327	0.36
T5	0.1	-	-	-	-
	0.2	1500	730	299	0.32
	0.3	1460	765	310	0.33
	0.4	1410	795	322	0.35
	0.5	1365	830	336	0.36
	0.6	1310	865	344	0.38
	0.7	1255	900	357	0.39
	0.8	1205	920	368	0.40

DSG0361D 45K HORIZONTAL

SPEED TAP	EXTERNAL STATIC PRESSURE (ESP) IN W. C.	AIRFLOW (CFM)	RPM	WATTS	BHP
T1 *	0.1	1090	515	112	0.10
	0.2	975	550	114	0.11
	0.3	900	595	122	0.12
	0.4	820	640	131	0.13
	0.5	755	685	138	0.14
	0.6	660	735	151	0.15
	0.7	-	-	-	-
	0.8	-	-	-	-
T2	0.1	1445	630	218	0.22
	0.2	1385	655	226	0.23
	0.3	1325	690	235	0.25
	0.4	1275	725	245	0.26
	0.5	1220	765	257	0.27
	0.6	1150	800	267	0.29
	0.7	1090	835	276	0.30
	0.8	1035	865	286	0.31
T3 **	0.1	1320	585	176	0.18
	0.2	1240	620	182	0.19
	0.3	1180	655	191	0.20
	0.4	1110	700	201	0.21
	0.5	1055	740	212	0.22
	0.6	985	775	220	0.23
	0.7	910	815	231	0.24
	0.8	845	845	241	0.25
T4	0.1	1500	645	245	0.25
	0.2	1465	680	254	0.27
	0.3	1405	715	265	0.28
	0.4	1355	750	276	0.29
	0.5	1305	780	289	0.31
	0.6	1240	815	296	0.32
	0.7	1180	850	308	0.33
	0.8	1125	875	319	0.34
T5	0.1	-	-	-	-
	0.2	-	-	-	-
	0.3	1500	740	302	0.32
	0.4	1450	765	314	0.33
	0.5	1405	800	328	0.35
	0.6	1350	835	335	0.36
	0.7	1295	870	348	0.38
	0.8	1240	890	359	0.39

* In DSG0361D 45K, DSG0361D 90K, DSG0363D 45K, DSG0363D 70K, DSG0363D 90K, DSG0364D 45K, DSG0364D 70K, DSG0364D / DSG0367D 90K, DSG0481D 90K, DSG0481D 115K, DSG0483D 70K, DSG0483D 90K, DSG0483D 115K, DSG0484D 70K, DSG0484D 90K, DSG0484D / DSG0487D 115K, DSG0601D 90K, DSG0601D 140K, DSG0603D 90K, DSG0603D 115K, DSG0603D 140K, DSG0604D 90K, DSG0604D 115K, AND DSG0604D / DSG0607D 140K DOWNSHOT and Horizontal Tables, T1 values are for fan mode only

** IN DSG0361D 45K, DSG0361D 90K, DSG0363D 45K, DSG0363D 70K, DSG0363D 90K, DSG0364D 45K, DSG0364D 70K, DSG0364D / DSG0367D 90K, DSG0481D 90K, DSG0481D 115K, DSG0483D 70K, DSG0483D 90K, DSG0483D 115K, DSG0484D 70K, DSG0484D 90K, DSG0484D / DSG0487D 115K, DSG0601D 90K, DSG0601D 140K, DSG0603D 90K, DSG0603D 115K, DSG0603D 140K, DSG0604D 90K, DSG0604D 115K, and DSG0604D / DSG0607D 140K DOWNSHOT and Horizontal Tables, T3 values are for heat mode only

DSG0361D 90K DOWNSHOT

SPEED TAP	EXTERNAL STATIC PRESSURE (ESP) IN W. C.	AIRFLOW (CFM)	RPM	WATTS	BHP
T1 *	0.1	1015	520	103	0.09
	0.2	885	550	103	0.10
	0.3	815	600	111	0.11
	0.4	730	655	119	0.12
	0.5	665	700	127	0.12
	0.6	-	-	-	-
	0.7	-	-	-	-
	0.8	-	-	-	-
T2	0.1	1405	650	223	0.23
	0.2	1345	685	230	0.24
	0.3	1290	715	241	0.25
	0.4	1235	755	251	0.27
	0.5	1180	795	264	0.28
	0.6	1120	835	273	0.30
	0.7	1060	865	284	0.31
	0.8	1000	895	294	0.32
T3 **	0.1	1220	585	161	0.16
	0.2	1130	620	166	0.17
	0.3	1070	665	175	0.18
	0.4	1005	705	184	0.19
	0.5	945	750	194	0.20
	0.6	870	790	204	0.21
	0.7	800	830	214	0.23
	0.8	730	865	224	0.23
T4	0.1	1470	670	251	0.26
	0.2	1420	705	261	0.28
	0.3	1365	740	272	0.29
	0.4	1315	775	283	0.30
	0.5	1265	810	296	0.32
	0.6	1205	845	304	0.33
	0.7	1145	880	316	0.35
	0.8	1090	905	327	0.36
T5	0.1	-	-	-	-
	0.2	1500	730	299	0.32
	0.3	1460	765	310	0.33
	0.4	1410	795	322	0.35
	0.5	1365	830	336	0.36
	0.6	1310	865	344	0.38
	0.7	1255	900	357	0.39
	0.8	1205	920	368	0.40

DSG0361D 90K HORIZONTAL

SPEED TAP	EXTERNAL STATIC PRESSURE (ESP) IN W. C.	AIRFLOW (CFM)	RPM	WATTS	BHP
T1 *	0.1	1045	500	100	0.09
	0.2	910	530	100	0.09
	0.3	840	580	108	0.10
	0.4	750	630	116	0.11
	0.5	685	675	124	0.12
	0.6	-	-	-	-
	0.7	-	-	-	-
	0.8	-	-	-	-
T2	0.1	1450	630	217	0.22
	0.2	1385	655	225	0.23
	0.3	1330	690	234	0.25
	0.4	1270	730	245	0.26
	0.5	1220	770	258	0.27
	0.6	1155	805	266	0.29
	0.7	1090	835	276	0.3
	0.8	1035	865	287	0.31
T3 **	0.1	1255	565	157	0.15
	0.2	1165	600	162	0.16
	0.3	1100	640	171	0.17
	0.4	1035	680	179	0.18
	0.5	975	725	189	0.20
	0.6	895	760	199	0.21
	0.7	825	800	209	0.22
	0.8	750	835	218	0.23
T4	0.1	1500	645	245	0.25
	0.2	1465	680	254	0.27
	0.3	1405	715	265	0.28
	0.4	1355	750	276	0.29
	0.5	1305	780	289	0.31
	0.6	1240	815	296	0.32
	0.7	1180	850	308	0.33
	0.8	1125	875	319	0.34
T5	0.1	-	-	-	-
	0.2	-	-	-	-
	0.3	1500	740	302	0.32
	0.4	1450	765	314	0.33
	0.5	1405	800	328	0.35
	0.6	1350	835	335	0.36
	0.7	1295	870	348	0.38
	0.8	1240	890	359	0.39

* In DSG0361D 45K, DSG0361D 90K, DSG0363D 45K, DSG0363D 70K, DSG0363D 90K, DSG0364D 45K, DSG0364D 70K, DSG0364D / DSG0367D 90K, DSG0481D 90K, DSG0481D 115K, DSG0483D 70K, DSG0483D 90K, DSG0483D 115K, DSG0484D 70K, DSG0484D 90K, DSG0484D / DSG0487D 115K, DSG0601D 90K, DSG0601D 140K, DSG0603D 90K, DSG0603D 115K, DSG0603D 140K, DSG0604D 90K, DSG0604D 115K, AND DSG0604D / DSG0607D 140K DOWNSHOT and HORIZONTAL Tables, T1 values are for fan mode only

** IN DSG0361D 45K, DSG0361D 90K, DSG0363D 45K, DSG0363D 70K, DSG0363D 90K, DSG0364D 45K, DSG0364D 70K, DSG0364D / DSG0367D 90K, DSG0481D 90K, DSG0481D 115K, DSG0483D 70K, DSG0483D 90K, DSG0483D 115K, DSG0484D 70K, DSG0484D 90K, DSG0484D / DSG0487D 115K, DSG0601D 90K, DSG0601D 140K, DSG0603D 90K, DSG0603D 115K, DSG0603D 140K, DSG0604D 90K, DSG0604D 115K, and DSG0604D / DSG0607D 140K DOWNSHOT and HORIZONTAL Tables, T3 values are for heat mode only

DSG0363D 45K DOWNSHOT

SPEED TAP	EXTERNAL STATIC PRESSURE (ESP) IN W. C.	AIRFLOW (CFM)	RPM	WATTS	BHP
T1 *	0.1	1060	535	115	0.11
	0.2	945	570	117	0.11
	0.3	875	615	125	0.12
	0.4	795	665	134	0.13
	0.5	735	710	142	0.14
	0.6	640	760	155	0.15
	0.7	-	-	-	-
	0.8	-	-	-	-
T2	0.1	1405	650	224	0.23
	0.2	1340	685	231	0.24
	0.3	1290	715	241	0.26
	0.4	1235	750	251	0.27
	0.5	1180	790	264	0.28
	0.6	1120	830	273	0.3
	0.7	1055	865	284	0.31
	0.8	1000	895	294	0.32
T3 **	0.1	1280	605	180	0.18
	0.2	1205	640	187	0.19
	0.3	1145	680	196	0.20
	0.4	1080	725	206	0.22
	0.5	1025	765	217	0.23
	0.6	955	805	226	0.24
	0.7	885	845	237	0.25
	0.8	820	875	247	0.26
T4	0.1	1470	670	251	0.26
	0.2	1420	705	261	0.28
	0.3	1365	740	272	0.29
	0.4	1315	775	283	0.30
	0.5	1265	810	296	0.32
	0.6	1205	845	304	0.33
	0.7	1145	880	316	0.35
	0.8	1090	905	327	0.36
T5	0.1	-	-	-	-
	0.2	1500	730	299	0.32
	0.3	1460	765	310	0.33
	0.4	1410	795	322	0.35
	0.5	1365	830	336	0.36
	0.6	1310	865	344	0.38
	0.7	1255	900	357	0.39
	0.8	1205	920	368	0.40

DSG0363D 45K HORIZONTAL

SPEED TAP	EXTERNAL STATIC PRESSURE (ESP) IN W. C.	AIRFLOW (CFM)	RPM	WATTS	BHP
T1 *	0.1	1090	515	112	0.10
	0.2	975	550	114	0.11
	0.3	900	595	122	0.12
	0.4	820	640	131	0.13
	0.5	755	685	138	0.14
	0.6	660	735	151	0.15
	0.7	-	-	-	-
	0.8	-	-	-	-
T2	0.1	1445	630	218	0.22
	0.2	1385	655	226	0.23
	0.3	1325	690	235	0.25
	0.4	1275	725	245	0.26
	0.5	1220	765	257	0.27
	0.6	1150	800	267	0.29
	0.7	1090	835	276	0.3
	0.8	1035	865	286	0.31
T3 **	0.1	1320	585	176	0.18
	0.2	1240	620	182	0.19
	0.3	1180	655	191	0.20
	0.4	1110	700	201	0.21
	0.5	1055	740	212	0.22
	0.6	985	775	220	0.23
	0.7	910	815	231	0.24
	0.8	845	845	241	0.25
T4	0.1	1500	645	245	0.25
	0.2	1465	680	254	0.27
	0.3	1405	715	265	0.28
	0.4	1355	750	276	0.29
	0.5	1305	780	289	0.31
	0.6	1240	815	296	0.32
	0.7	1180	850	308	0.33
	0.8	1125	875	319	0.34
T5	0.1	-	-	-	-
	0.2	-	-	-	-
	0.3	1500	740	302	0.32
	0.4	1450	765	314	0.33
	0.5	1405	800	328	0.35
	0.6	1350	835	335	0.36
	0.7	1295	870	348	0.38
	0.8	1240	890	359	0.39

* In DSG0361D 45K, DSG0361D 90K, DSG0363D 45K, DSG0363D 70K, DSG0363D 90K, DSG0364D 45K, DSG0364D 70K, DSG0364D / DSG0367D 90K, DSG0481D 90K, DSG0481D 115K, DSG0483D 70K, DSG0483D 90K, DSG0483D 115K, DSG0484D 70K, DSG0484D 90K, DSG0484D / DSG0487D 115K, DSG0601D 90K, DSG0601D 140K, DSG0603D 90K, DSG0603D 115K, DSG0603D 140K, DSG0604D 90K, DSG0604D 115K, AND DSG0604D / DSG0607D 140K DOWNSHOT and HORIZONTAL Tables, T1 values are for fan mode only

** IN DSG0361D 45K, DSG0361D 90K, DSG0363D 45K, DSG0363D 70K, DSG0363D 90K, DSG0364D 45K, DSG0364D 70K, DSG0364D / DSG0367D 90K, DSG0481D 90K, DSG0481D 115K, DSG0483D 70K, DSG0483D 90K, DSG0483D 115K, DSG0484D 70K, DSG0484D 90K, DSG0484D / DSG0487D 115K, DSG0601D 90K, DSG0601D 140K, DSG0603D 90K, DSG0603D 115K, DSG0603D 140K, DSG0604D 90K, DSG0604D 115K, and DSG0604D / DSG0607D 140K DOWNSHOT and HORIZONTAL Tables, T3 values are for heat mode only

DSG0363D 70K DOWNSHOT

SPEED TAP	EXTERNAL STATIC PRESSURE (ESP) IN W. C.	AIRFLOW (CFM)	RPM	WATTS	BHP
T1 *	0.1	1175	570	146	0.14
	0.2	1075	605	150	0.15
	0.3	1015	650	159	0.16
	0.4	945	695	168	0.17
	0.5	885	735	178	0.18
	0.6	800	780	189	0.19
	0.7	730	820	198	0.20
	0.8	660	860	208	0.21
T2	0.1	1410	655	224	0.23
	0.2	1340	690	231	0.25
	0.3	1300	710	241	0.25
	0.4	1240	750	251	0.27
	0.5	1170	790	265	0.28
	0.6	1120	830	274	0.3
	0.7	1055	865	285	0.31
	0.8	995	885	295	0.32
T3 **	0.1	1325	620	196	0.20
	0.2	1255	655	203	0.21
	0.3	1195	695	213	0.22
	0.4	1135	735	223	0.24
	0.5	1085	775	234	0.25
	0.6	1015	815	243	0.26
	0.7	950	850	254	0.27
	0.8	900	885	264	0.28
T4	0.1	1470	670	251	0.26
	0.2	1420	705	261	0.28
	0.3	1365	740	272	0.29
	0.4	1315	775	283	0.30
	0.5	1265	810	296	0.32
	0.6	1205	845	304	0.33
	0.7	1145	880	316	0.35
	0.8	1090	905	327	0.36
T5	0.1	-	-	-	-
	0.2	1500	730	299	0.32
	0.3	1460	765	310	0.33
	0.4	1410	795	322	0.35
	0.5	1365	830	336	0.36
	0.6	1310	865	344	0.38
	0.7	1255	900	357	0.39
	0.8	1205	920	368	0.40

DSG0363D 70K HORIZONTAL

SPEED TAP	EXTERNAL STATIC PRESSURE (ESP) IN W. C.	AIRFLOW (CFM)	RPM	WATTS	BHP
T1 *	0.1	1210	550	142	0.14
	0.2	1105	585	146	0.15
	0.3	1045	625	155	0.16
	0.4	975	670	164	0.17
	0.5	910	710	174	0.18
	0.6	825	755	184	0.19
	0.7	750	790	193	0.20
	0.8	680	830	203	0.21
T2	0.1	1450	635	219	0.23
	0.2	1380	665	226	0.24
	0.3	1335	685	232	0.25
	0.4	1275	725	245	0.26
	0.5	1205	765	259	0.27
	0.6	1150	800	268	0.29
	0.7	1085	835	276	0.30
	0.8	1035	855	288	0.31
T3 **	0.1	1365	600	191	0.19
	0.2	1295	630	198	0.20
	0.3	1230	670	208	0.22
	0.4	1170	710	217	0.23
	0.5	1120	750	228	0.24
	0.6	1045	785	237	0.25
	0.7	980	820	248	0.26
	0.8	915	855	257	0.27
T4	0.1	1500	645	245	0.25
	0.2	1465	680	254	0.27
	0.3	1405	715	265	0.28
	0.4	1355	750	276	0.29
	0.5	1305	780	289	0.31
	0.6	1240	815	296	0.32
	0.7	1180	850	308	0.33
	0.8	1125	875	319	0.34
T5	0.1	-	-	-	-
	0.2	-	-	-	-
	0.3	1500	740	302	0.32
	0.4	1450	765	314	0.33
	0.5	1405	800	328	0.35
	0.6	1350	835	335	0.36
	0.7	1295	870	348	0.38
	0.8	1240	890	359	0.39

* In DSG0361D 45K, DSG0361D 90K, DSG0363D 45K, DSG0363D 70K, DSG0363D 90K, DSG0364D 45K, DSG0364D 70K, DSG0364D / DSG0367D 90K, DSG0481D 90K, DSG0481D 115K, DSG0483D 70K, DSG0483D 90K, DSG0483D 115K, DSG0484D 70K, DSG0484D 90K, DSG0484D / DSG0487D 115K, DSG0601D 90K, DSG0601D 140K, DSG0603D 90K, DSG0603D 115K, DSG0603D 140K, DSG0604D 90K, DSG0604D 115K, AND DSG0604D / DSG0607D 140K DOWNSHOT and HORIZONTAL Tables, T1 values are for fan mode only

** IN DSG0361D 45K, DSG0361D 90K, DSG0363D 45K, DSG0363D 70K, DSG0363D 90K, DSG0364D 45K, DSG0364D 70K, DSG0364D / DSG0367D 90K, DSG0481D 90K, DSG0481D 115K, DSG0483D 70K, DSG0483D 90K, DSG0483D 115K, DSG0484D 70K, DSG0484D 90K, DSG0484D / DSG0487D 115K, DSG0601D 90K, DSG0601D 140K, DSG0603D 90K, DSG0603D 115K, DSG0603D 140K, DSG0604D 90K, DSG0604D 115K, and DSG0604D / DSG0607D 140K DOWNSHOT and HORIZONTAL Tables, T3 values are for heat mode only

DSG0363D 90K DOWNSHOT

SPEED TAP	EXTERNAL STATIC PRESSURE (ESP) IN W. C.	AIRFLOW (CFM)	RPM	WATTS	BHP
T1 *	0.1	1015	520	103	0.09
	0.2	885	550	103	0.10
	0.3	815	600	111	0.11
	0.4	730	655	119	0.12
	0.5	665	700	127	0.12
	0.6	-	-	-	-
	0.7	-	-	-	-
	0.8	-	-	-	-
T2	0.1	1405	650	223	0.23
	0.2	1345	685	230	0.24
	0.3	1290	715	241	0.25
	0.4	1235	755	251	0.27
	0.5	1180	795	264	0.28
	0.6	1120	835	273	0.3
	0.7	1060	865	284	0.31
	0.8	1000	895	294	0.32
T3 **	0.1	1220	585	161	0.16
	0.2	1130	620	166	0.17
	0.3	1070	665	175	0.18
	0.4	1005	705	184	0.19
	0.5	945	750	194	0.20
	0.6	870	790	204	0.21
	0.7	800	830	214	0.23
	0.8	730	865	224	0.23
T4	0.1	1470	670	251	0.26
	0.2	1420	705	261	0.28
	0.3	1365	740	272	0.29
	0.4	1315	775	283	0.30
	0.5	1265	810	296	0.32
	0.6	1205	845	304	0.33
	0.7	1145	880	316	0.35
	0.8	1090	905	327	0.36
T5	0.1	-	-	-	-
	0.2	1500	730	299	0.32
	0.3	1460	765	310	0.33
	0.4	1410	795	322	0.35
	0.5	1365	830	336	0.36
	0.6	1310	865	344	0.38
	0.7	1255	900	357	0.39
	0.8	1205	920	368	0.40

DSG0363D 90K HORIZONTAL

SPEED TAP	EXTERNAL STATIC PRESSURE (ESP) IN W. C.	AIRFLOW (CFM)	RPM	WATTS	BHP
T1 *	0.1	1045	500	100	0.09
	0.2	910	530	100	0.09
	0.3	840	580	108	0.10
	0.4	750	630	116	0.11
	0.5	685	675	124	0.12
	0.6	-	-	-	-
	0.7	-	-	-	-
	0.8	-	-	-	-
T2	0.1	1450	630	217	0.22
	0.2	1385	655	225	0.23
	0.3	1330	690	234	0.25
	0.4	1270	730	245	0.26
	0.5	1220	770	258	0.27
	0.6	1155	805	266	0.29
	0.7	1090	835	276	0.3
	0.8	1035	865	287	0.31
T3 **	0.1	1255	565	157	0.15
	0.2	1165	600	162	0.16
	0.3	1100	640	171	0.17
	0.4	1035	680	179	0.18
	0.5	975	725	189	0.20
	0.6	895	760	199	0.21
	0.7	825	800	209	0.22
	0.8	750	835	218	0.23
T4	0.1	1500	645	245	0.25
	0.2	1465	680	254	0.27
	0.3	1405	715	265	0.28
	0.4	1355	750	276	0.29
	0.5	1305	780	289	0.31
	0.6	1240	815	296	0.32
	0.7	1180	850	308	0.33
	0.8	1125	875	319	0.34
T5	0.1	-	-	-	-
	0.2	-	-	-	-
	0.3	1500	740	302	0.32
	0.4	1450	765	314	0.33
	0.5	1405	800	328	0.35
	0.6	1350	835	335	0.36
	0.7	1295	870	348	0.38
	0.8	1240	890	359	0.39

* In DSG0361D 45K, DSG0361D 90K, DSG0363D 45K, DSG0363D 70K, DSG0363D 90K, DSG0364D 45K, DSG0364D 70K, DSG0364D / DSG0367D 90K, DSG0481D 90K, DSG0481D 115K, DSG0483D 70K, DSG0483D 90K, DSG0483D 115K, DSG0484D 70K, DSG0484D 90K, DSG0484D / DSG0487D 115K, DSG0601D 90K, DSG0601D 140K, DSG0603D 90K, DSG0603D 115K, DSG0603D 140K, DSG0604D 90K, DSG0604D 115K, AND DSG0604D / DSG0607D 140K DOWNSHOT and HORIZONTAL Tables, T1 values are for fan mode only

** IN DSG0361D 45K, DSG0361D 90K, DSG0363D 45K, DSG0363D 70K, DSG0363D 90K, DSG0364D 45K, DSG0364D 70K, DSG0364D / DSG0367D 90K, DSG0481D 90K, DSG0481D 115K, DSG0483D 70K, DSG0483D 90K, DSG0483D 115K, DSG0484D 70K, DSG0484D 90K, DSG0484D / DSG0487D 115K, DSG0601D 90K, DSG0601D 140K, DSG0603D 90K, DSG0603D 115K, DSG0603D 140K, DSG0604D 90K, DSG0604D 115K, and DSG0604D / DSG0607D 140K DOWNSHOT and HORIZONTAL Tables, T3 values are for heat mode only

DSG0364D 45K DOWNSHOT

SPEED TAP	EXTERNAL STATIC PRESSURE (ESP) IN W. C.	AIRFLOW (CFM)	RPM	WATTS	BHP
T1 *	0.1	1090	535	112	0.12
	0.2	1010	580	122	0.13
	0.3	945	620	130	0.14
	0.4	875	660	139	0.14
	0.5	795	705	147	0.15
	0.6	725	745	157	0.16
	0.7	650	790	166	0.17
	0.8	555	845	179	0.19
T2	0.1	1405	640	217	0.23
	0.2	1340	675	229	0.24
	0.3	1285	710	240	0.25
	0.4	1225	750	250	0.27
	0.5	1170	785	261	0.28
	0.6	1110	820	272	0.29
	0.7	1050	860	283	0.31
	0.8	975	895	294	0.32
T3 **	0.1	1390	635	211	0.22
	0.2	1325	670	223	0.24
	0.3	1270	705	234	0.25
	0.4	1210	745	244	0.26
	0.5	1150	780	255	0.27
	0.6	1090	815	266	0.29
	0.7	1030	855	277	0.30
	0.8	955	895	288	0.32
T4	0.1	1490	665	250	0.27
	0.2	1430	700	263	0.28
	0.3	1375	735	274	0.29
	0.4	1320	770	285	0.31
	0.5	1265	805	297	0.32
	0.6	1210	840	308	0.34
	0.7	1155	875	320	0.35
	0.8	1090	915	331	0.37
T5	0.1	-	-	-	-
	0.2	-	-	-	-
	0.3	1480	765	317	0.34
	0.4	1430	800	328	0.36
	0.5	1375	835	341	0.37
	0.6	1325	865	352	0.39
	0.7	1270	895	365	0.40
	0.8	1215	930	376	0.42

DSG0364D 45K HORIZONTAL

SPEED TAP	EXTERNAL STATIC PRESSURE (ESP) IN W. C.	AIRFLOW (CFM)	RPM	WATTS	BHP
T1 *	0.1	1115	515	109	0.11
	0.2	1035	560	118	0.12
	0.3	970	600	126	0.13
	0.4	895	635	135	0.14
	0.5	815	680	143	0.15
	0.6	745	720	152	0.16
	0.7	665	760	161	0.17
	0.8	570	815	174	0.18
T2	0.1	1440	620	211	0.22
	0.2	1380	650	221	0.23
	0.3	1315	685	233	0.25
	0.4	1255	725	243	0.26
	0.5	1200	760	253	0.27
	0.6	1135	790	264	0.28
	0.7	1075	830	275	0.30
	0.8	1000	865	285	0.31
T3 **	0.1	1425	615	205	0.22
	0.2	1360	645	216	0.23
	0.3	1300	680	227	0.24
	0.4	1240	720	237	0.25
	0.5	1180	755	247	0.27
	0.6	1115	785	258	0.28
	0.7	1055	825	269	0.29
	0.8	980	865	279	0.30
T4	0.1	-	-	-	-
	0.2	1465	675	255	0.27
	0.3	1410	710	266	0.28
	0.4	1355	745	276	0.30
	0.5	1295	775	288	0.31
	0.6	1240	810	299	0.32
	0.7	1185	845	310	0.34
	0.8	1115	885	321	0.35
T5	0.1	-	-	-	-
	0.2	-	-	-	-
	0.3	1500	740	307	0.33
	0.4	1465	770	318	0.34
	0.5	1410	805	331	0.36
	0.6	1360	835	341	0.37
	0.7	1300	865	354	0.39
	0.8	1245	895	365	0.40

* In DSG0361D 45K, DSG0361D 90K, DSG0363D 45K, DSG0363D 70K, DSG0363D 90K, DSG0364D 45K, DSG0364D 70K, DSG0364D / DSG0367D 90K, DSG0481D 90K, DSG0481D 115K, DSG0483D 70K, DSG0483D 90K, DSG0483D 115K, DSG0484D 70K, DSG0484D 90K, DSG0484D / DSG0487D 115K, DSG0601D 90K, DSG0601D 140K, DSG0603D 90K, DSG0603D 115K, DSG0603D 140K, DSG0604D 90K, DSG0604D 115K, AND DSG0604D / DSG0607D 140K DOWNSHOT and HORIZONTAL Tables, T1 values are for fan mode only

** IN DSG0361D 45K, DSG0361D 90K, DSG0363D 45K, DSG0363D 70K, DSG0363D 90K, DSG0364D 45K, DSG0364D 70K, DSG0364D / DSG0367D 90K, DSG0481D 90K, DSG0481D 115K, DSG0483D 70K, DSG0483D 90K, DSG0483D 115K, DSG0484D 70K, DSG0484D 90K, DSG0484D / DSG0487D 115K, DSG0601D 90K, DSG0601D 140K, DSG0603D 90K, DSG0603D 115K, DSG0603D 140K, DSG0604D 90K, DSG0604D 115K, and DSG0604D / DSG0607D 140K DOWNSHOT and HORIZONTAL Tables, T3 values are for heat mode only

DSG0364D 70K DOWNSHOT

SPEED TAP	EXTERNAL STATIC PRESSURE (ESP) IN W. C.	AIRFLOW (CFM)	RPM	WATTS	BHP
T1 *	0.1	1090	535	112	0.12
	0.2	1010	580	122	0.13
	0.3	945	620	130	0.14
	0.4	875	660	139	0.14
	0.5	795	705	147	0.15
	0.6	725	745	157	0.16
	0.7	650	790	166	0.17
	0.8	555	845	179	0.19
T2	0.1	1410	640	216	0.23
	0.2	1340	680	229	0.24
	0.3	1290	715	239	0.26
	0.4	1230	745	249	0.27
	0.5	1165	785	261	0.28
	0.6	1110	815	271	0.29
	0.7	1055	860	283	0.31
	0.8	975	900	294	0.32
T3 **	0.1	1285	600	174	0.18
	0.2	1215	640	185	0.19
	0.3	1155	675	195	0.21
	0.4	1095	715	205	0.22
	0.5	1030	755	215	0.23
	0.6	965	795	225	0.24
	0.7	900	830	235	0.25
	0.8	820	880	248	0.27
T4	0.1	1490	665	250	0.27
	0.2	1430	700	263	0.28
	0.3	1375	735	274	0.29
	0.4	1320	770	285	0.31
	0.5	1265	805	297	0.32
	0.6	1210	840	308	0.34
	0.7	1155	875	320	0.35
	0.8	1090	915	331	0.37
T5	0.1	-	-	-	-
	0.2	-	-	-	-
	0.3	1480	765	317	0.34
	0.4	1430	800	328	0.36
	0.5	1375	835	341	0.37
	0.6	1325	865	352	0.39
	0.7	1270	895	365	0.40
	0.8	1215	930	376	0.42

DSG0364D 70K HORIZONTAL

SPEED TAP	EXTERNAL STATIC PRESSURE (ESP) IN W. C.	AIRFLOW (CFM)	RPM	WATTS	BHP
T1 *	0.1	1115	515	109	0.11
	0.2	1035	560	118	0.12
	0.3	970	600	126	0.13
	0.4	895	635	135	0.14
	0.5	815	680	143	0.15
	0.6	745	720	152	0.16
	0.7	665	760	161	0.17
	0.8	570	815	174	0.18
T2	0.1	1450	620	209	0.22
	0.2	1370	650	223	0.23
	0.3	1320	690	231	0.25
	0.4	1265	720	241	0.26
	0.5	1200	760	253	0.27
	0.6	1135	785	264	0.28
	0.7	1085	830	274	0.3
	0.8	995	870	285	0.31
T3 **	0.1	1315	580	169	0.18
	0.2	1245	620	179	0.19
	0.3	1185	650	189	0.20
	0.4	1120	690	199	0.21
	0.5	1055	730	209	0.22
	0.6	990	765	218	0.23
	0.7	920	800	228	0.24
	0.8	840	850	241	0.26
T4	0.1	-	-	-	-
	0.2	1465	675	255	0.27
	0.3	1410	710	266	0.28
	0.4	1355	745	276	0.30
	0.5	1295	775	288	0.31
	0.6	1240	810	299	0.32
	0.7	1185	845	310	0.34
	0.8	1115	885	321	0.35
T5	0.1	-	-	-	-
	0.2	-	-	-	-
	0.3	1500	740	307	0.33
	0.4	1465	770	318	0.34
	0.5	1410	805	331	0.36
	0.6	1360	835	341	0.37
	0.7	1300	865	354	0.39
	0.8	1245	895	365	0.40

* In DSG0361D 45K, DSG0361D 90K, DSG0363D 45K, DSG0363D 70K, DSG0363D 90K, DSG0364D 45K, DSG0364D 70K, DSG0364D / DSG0367D 90K, DSG0481D 90K, DSG0481D 115K, DSG0483D 70K, DSG0483D 90K, DSG0483D 115K, DSG0484D 70K, DSG0484D 90K, DSG0484D / DSG0487D 115K, DSG0601D 90K, DSG0601D 140K, DSG0603D 90K, DSG0603D 115K, DSG0603D 140K, DSG0604D 90K, DSG0604D 115K, AND DSG0604D / DSG0607D 140K DOWNSHOT and HORIZONTAL Tables, T1 values are for fan mode only

** IN DSG0361D 45K, DSG0361D 90K, DSG0363D 45K, DSG0363D 70K, DSG0363D 90K, DSG0364D 45K, DSG0364D 70K, DSG0364D / DSG0367D 90K, DSG0481D 90K, DSG0481D 115K, DSG0483D 70K, DSG0483D 90K, DSG0483D 115K, DSG0484D 70K, DSG0484D 90K, DSG0484D / DSG0487D 115K, DSG0601D 90K, DSG0601D 140K, DSG0603D 90K, DSG0603D 115K, DSG0603D 140K, DSG0604D 90K, DSG0604D 115K, and DSG0604D / DSG0607D 140K DOWNSHOT and HORIZONTAL Tables, T3 values are for heat mode only

DSG0364D / DSG0367D 90K DOWNSHOT

SPEED TAP	EXTERNAL STATIC PRESSURE (ESP) IN W. C.	AIRFLOW (CFM)	RPM	WATTS	BHP
T1 *	0.1	1305	605	182	0.19
	0.2	1240	645	193	0.20
	0.3	1180	685	202	0.22
	0.4	1120	720	213	0.23
	0.5	1050	760	223	0.24
	0.6	990	795	233	0.25
	0.7	925	835	244	0.26
	0.8	845	880	256	0.28
T2	0.1	1405	635	218	0.00
	0.2	1335	675	230	0.00
	0.3	1285	710	241	0.00
	0.4	1225	745	251	0.00
	0.5	1165	785	263	0.00
	0.6	1105	820	273	0.00
	0.7	1045	855	284	0.00
	0.8	970	900	296	0.00
T3 **	0.1	1615	705	304	0.33
	0.2	1560	740	317	0.34
	0.3	1510	775	330	0.36
	0.4	1460	805	342	0.37
	0.5	1410	840	355	0.39
	0.6	1360	870	366	0.40
	0.7	1305	905	378	0.42
	0.8	1250	935	389	0.43
T4	0.1	1490	665	250	0.27
	0.2	1430	700	263	0.28
	0.3	1375	735	274	0.29
	0.4	1320	770	285	0.31
	0.5	1265	805	297	0.32
	0.6	1210	840	308	0.34
	0.7	1155	875	320	0.35
	0.8	1090	915	331	0.37
T5	0.1	-	-	-	-
	0.2	-	-	-	-
	0.3	1480	765	317	0.34
	0.4	1430	800	328	0.36
	0.5	1375	835	341	0.37
	0.6	1325	865	352	0.39
	0.7	1270	895	365	0.40
	0.8	1215	930	376	0.42

DSG0364D / DSG0367D 90K HORIZONTAL

SPEED TAP	EXTERNAL STATIC PRESSURE (ESP) IN W. C.	AIRFLOW (CFM)	RPM	WATTS	BHP
T1 *	0.1	1340	585	177	0.18
	0.2	1270	620	187	0.19
	0.3	1210	660	196	0.21
	0.4	1150	695	207	0.22
	0.5	1075	735	216	0.23
	0.6	1015	765	226	0.24
	0.7	950	805	237	0.25
	0.8	865	850	248	0.27
T2	0.1	1440	615	211	0.22
	0.2	1370	650	223	0.24
	0.3	1315	685	233	0.25
	0.4	1255	720	244	0.26
	0.5	1195	760	255	0.27
	0.6	1130	790	265	0.28
	0.7	1075	825	275	0.3
	0.8	995	870	287	0.31
T3 **	0.1	1655	680	295	0.31
	0.2	1600	715	307	0.33
	0.3	1550	750	320	0.35
	0.4	1495	775	332	0.36
	0.5	1445	810	344	0.37
	0.6	1395	840	355	0.39
	0.7	1340	875	367	0.40
	0.8	1280	900	377	0.42
T4	0.1	-	-	-	-
	0.2	1465	675	255	0.27
	0.3	1410	710	266	0.28
	0.4	1355	745	276	0.30
	0.5	1295	775	288	0.31
	0.6	1240	810	299	0.32
	0.7	1185	845	310	0.34
	0.8	1115	885	321	0.35
T5	0.1	-	-	-	-
	0.2	-	-	-	-
	0.3	1500	740	307	0.33
	0.4	1465	770	318	0.34
	0.5	1410	805	331	0.36
	0.6	1360	835	341	0.37
	0.7	1300	865	354	0.39
	0.8	1245	895	365	0.40

* In DSG0361D 45K, DSG0361D 90K, DSG0363D 45K, DSG0363D 70K, DSG0363D 90K, DSG0364D 45K, DSG0364D 70K, DSG0364D / DSG0367D 90K, DSG0481D 90K, DSG0481D 115K, DSG0483D 70K, DSG0483D 90K, DSG0483D 115K, DSG0484D 70K, DSG0484D 90K, DSG0484D / DSG0487D 115K, DSG0601D 90K, DSG0601D 140K, DSG0603D 90K, DSG0603D 115K, DSG0603D 140K, DSG0604D 90K, DSG0604D 115K, AND DSG0604D / DSG0607D 140K DOWNSHOT and HORIZONTAL Tables, T1 values are for fan mode only

** IN DSG0361D 45K, DSG0361D 90K, DSG0363D 45K, DSG0363D 70K, DSG0363D 90K, DSG0364D 45K, DSG0364D 70K, DSG0364D / DSG0367D 90K, DSG0481D 90K, DSG0481D 115K, DSG0483D 70K, DSG0483D 90K, DSG0483D 115K, DSG0484D 70K, DSG0484D 90K, DSG0484D / DSG0487D 115K, DSG0601D 90K, DSG0601D 140K, DSG0603D 90K, DSG0603D 115K, DSG0603D 140K, DSG0604D 90K, DSG0604D 115K, and DSG0604D / DSG0607D 140K DOWNSHOT and HORIZONTAL Tables, T3 values are for heat mode only

DSG0481D 90K DOWNSHOT

SPEED TAP	EXTERNAL STATIC PRESSURE (ESP) IN W. C.	AIRFLOW (CFM)	RPM	WATTS	BHP
T1 *	0.1	1245	630	194	0.20
	0.2	1190	670	202	0.21
	0.3	1135	705	213	0.22
	0.4	1100	750	223	0.24
	0.5	1025	790	234	0.25
	0.6	945	825	244	0.26
	0.7	865	865	253	0.27
	0.8	795	900	263	0.28
T2	0.1	1725	800	415	0.45
	0.2	1675	830	426	0.47
	0.3	1630	855	440	0.48
	0.4	1585	885	457	0.5
	0.5	1540	915	469	0.52
	0.6	1495	945	484	0.53
	0.7	1450	975	495	0.55
	0.8	1405	1005	512	0.57
T3 **	0.1	1550	740	322	0.35
	0.2	1500	770	332	0.36
	0.3	1450	800	345	0.37
	0.4	1410	835	359	0.39
	0.5	1355	865	370	0.40
	0.6	1295	900	383	0.42
	0.7	1240	930	394	0.43
	0.8	1185	965	409	0.45
T4	0.1	1830	840	479	0.53
	0.2	1780	865	492	0.54
	0.3	1735	895	506	0.56
	0.4	1695	920	524	0.58
	0.5	1655	945	536	0.59
	0.6	1610	975	551	0.61
	0.7	1570	1005	564	0.63
	0.8	1525	1035	581	0.65
T5	0.1	1895	865	524	0.58
	0.2	1850	890	538	0.60
	0.3	1805	915	553	0.61
	0.4	1760	940	570	0.63
	0.5	1725	970	584	0.65
	0.6	1685	995	599	0.67
	0.7	1645	1020	612	0.68
	0.8	1605	1050	629	0.70

DSG0481D 90K HORIZONTAL

SPEED TAP	EXTERNAL STATIC PRESSURE (ESP) IN W. C.	AIRFLOW (CFM)	RPM	WATTS	BHP
T1 *	0.1	1300	600	184	0.19
	0.2	1245	635	192	0.20
	0.3	1185	670	202	0.21
	0.4	1150	715	212	0.22
	0.5	1070	750	222	0.24
	0.6	990	785	232	0.25
	0.7	905	820	240	0.26
	0.8	830	855	250	0.27
T2	0.1	1800	760	394	0.43
	0.2	1750	790	405	0.45
	0.3	1705	810	418	0.46
	0.4	1655	840	433	0.48
	0.5	1610	870	445	0.49
	0.6	1565	900	459	0.51
	0.7	1515	925	469	0.52
	0.8	1470	955	487	0.54
T3 **	0.1	1620	705	306	0.33
	0.2	1570	730	315	0.34
	0.3	1515	760	328	0.35
	0.4	1475	795	341	0.37
	0.5	1415	820	352	0.38
	0.6	1355	855	364	0.40
	0.7	1295	885	374	0.41
	0.8	1240	915	389	0.43
T4	0.1	1910	800	455	0.50
	0.2	1860	820	467	0.52
	0.3	1815	850	481	0.53
	0.4	1770	875	498	0.55
	0.5	1730	900	509	0.57
	0.6	1680	925	523	0.58
	0.7	1640	955	536	0.60
	0.8	1595	985	552	0.62
T5	0.1	1980	820	498	0.55
	0.2	1935	845	511	0.57
	0.3	1885	870	525	0.58
	0.4	1840	895	542	0.60
	0.5	1805	920	555	0.62
	0.6	1760	945	569	0.63
	0.7	1720	970	581	0.65
	0.8	1675	1000	598	0.67

* In DSG0361D 45K, DSG0361D 90K, DSG0363D 45K, DSG0363D 70K, DSG0363D 90K, DSG0364D 45K, DSG0364D 70K, DSG0364D / DSG0367D 90K, DSG0481D 90K, DSG0481D 115K, DSG0483D 70K, DSG0483D 90K, DSG0483D 115K, DSG0484D 70K, DSG0484D 90K, DSG0484D / DSG0487D 115K, DSG0601D 90K, DSG0601D 140K, DSG0603D 90K, DSG0603D 115K, DSG0603D 140K, DSG0604D 90K, DSG0604D 115K, AND DSG0604D / DSG0607D 140K DOWNSHOT and HORIZONTAL Tables, T1 values are for fan mode only

** IN DSG0361D 45K, DSG0361D 90K, DSG0363D 45K, DSG0363D 70K, DSG0363D 90K, DSG0364D 45K, DSG0364D 70K, DSG0364D / DSG0367D 90K, DSG0481D 90K, DSG0481D 115K, DSG0483D 70K, DSG0483D 90K, DSG0483D 115K, DSG0484D 70K, DSG0484D 90K, DSG0484D / DSG0487D 115K, DSG0601D 90K, DSG0601D 140K, DSG0603D 90K, DSG0603D 115K, DSG0603D 140K, DSG0604D 90K, DSG0604D 115K, and DSG0604D / DSG0607D 140K DOWNSHOT and HORIZONTAL Tables, T3 values are for heat mode only

DSG0481D 115K DOWNSHOT

SPEED TAP	EXTERNAL STATIC PRESSURE (ESP) IN W. C.	AIRFLOW (CFM)	RPM	WATTS	BHP
T1 *	0.1	1530	730	313	0.33
	0.2	1480	765	323	0.35
	0.3	1430	795	336	0.36
	0.4	1390	830	350	0.38
	0.5	1335	860	361	0.39
	0.6	1275	895	374	0.41
	0.7	1220	930	384	0.42
	0.8	1165	960	399	0.44
T2	0.1	1725	800	416	0.45
	0.2	1675	830	427	0.47
	0.3	1630	855	441	0.48
	0.4	1585	885	457	0.5
	0.5	1540	915	469	0.52
	0.6	1495	945	484	0.54
	0.7	1445	975	495	0.55
	0.8	1400	1005	512	0.57
T3 **	0.1	1885	860	519	0.57
	0.2	1840	885	533	0.59
	0.3	1795	915	547	0.61
	0.4	1755	940	565	0.63
	0.5	1715	965	578	0.64
	0.6	1675	995	594	0.66
	0.7	1635	1020	607	0.68
	0.8	1595	1050	624	0.70
T4	0.1	1830	840	479	0.53
	0.2	1780	865	492	0.54
	0.3	1735	895	506	0.56
	0.4	1695	920	524	0.58
	0.5	1655	945	536	0.59
	0.6	1610	975	551	0.61
	0.7	1570	1005	564	0.63
	0.8	1525	1035	581	0.65
T5	0.1	1895	865	524	0.58
	0.2	1850	890	538	0.60
	0.3	1805	915	553	0.61
	0.4	1760	940	570	0.63
	0.5	1725	970	584	0.65
	0.6	1685	995	599	0.67
	0.7	1645	1020	612	0.68
	0.8	1605	1050	629	0.70

DSG0481D 115K HORIZONTAL

SPEED TAP	EXTERNAL STATIC PRESSURE (ESP) IN W. C.	AIRFLOW (CFM)	RPM	WATTS	BHP
T1 *	0.1	1600	695	297	0.32
	0.2	1545	725	307	0.33
	0.3	1495	755	319	0.35
	0.4	1455	790	333	0.36
	0.5	1395	815	343	0.37
	0.6	1330	850	355	0.39
	0.7	1275	885	365	0.40
	0.8	1215	910	379	0.42
T2	0.1	1800	760	394	0.43
	0.2	1750	790	406	0.45
	0.3	1705	810	419	0.46
	0.4	1655	840	434	0.48
	0.5	1610	870	446	0.49
	0.6	1560	900	460	0.51
	0.7	1510	925	470	0.52
	0.8	1465	955	487	0.54
T3 **	0.1	1970	815	493	0.54
	0.2	1925	840	506	0.56
	0.3	1875	870	520	0.58
	0.4	1835	895	537	0.60
	0.5	1790	915	549	0.61
	0.6	1750	945	564	0.63
	0.7	1710	970	577	0.65
	0.8	1665	1000	593	0.67
T4	0.1	1910	800	455	0.50
	0.2	1860	820	467	0.52
	0.3	1815	850	481	0.53
	0.4	1770	875	498	0.55
	0.5	1730	900	509	0.57
	0.6	1680	925	523	0.58
	0.7	1640	955	536	0.60
	0.8	1595	985	552	0.62
T5	0.1	1980	820	498	0.55
	0.2	1935	845	511	0.57
	0.3	1885	870	525	0.58
	0.4	1840	895	542	0.60
	0.5	1805	920	555	0.62
	0.6	1760	945	569	0.63
	0.7	1720	970	581	0.65
	0.8	1675	1000	598	0.67

* In DSG0361D 45K, DSG0361D 90K, DSG0363D 45K, DSG0363D 70K, DSG0363D 90K, DSG0364D 45K, DSG0364D 70K, DSG0364D / DSG0367D 90K, DSG0481D 90K, DSG0481D 115K, DSG0483D 70K, DSG0483D 90K, DSG0483D 115K, DSG0484D 70K, DSG0484D 90K, DSG0484D / DSG0487D 115K, DSG0601D 90K, DSG0601D 140K, DSG0603D 90K, DSG0603D 115K, DSG0603D 140K, DSG0604D 90K, DSG0604D 115K, AND DSG0604D / DSG0607D 140K DOWNSHOT and HORIZONTAL Tables, T1 values are for fan mode only

** IN DSG0361D 45K, DSG0361D 90K, DSG0363D 45K, DSG0363D 70K, DSG0363D 90K, DSG0364D 45K, DSG0364D 70K, DSG0364D / DSG0367D 90K, DSG0481D 90K, DSG0481D 115K, DSG0483D 70K, DSG0483D 90K, DSG0483D 115K, DSG0484D 70K, DSG0484D 90K, DSG0484D / DSG0487D 115K, DSG0601D 90K, DSG0601D 140K, DSG0603D 90K, DSG0603D 115K, DSG0603D 140K, DSG0604D 90K, DSG0604D 115K, and DSG0604D / DSG0607D 140K DOWNSHOT and Horizontal Tables, T3 values are for heat mode only

DSG0483D 70K DOWNSHOT

SPEED TAP	EXTERNAL STATIC PRESSURE (ESP) IN W. C.	AIRFLOW (CFM)	RPM	WATTS	BHP
T1 *	0.1	920	525	92	0.09
	0.2	860	565	98	0.10
	0.3	800	610	107	0.10
	0.4	770	660	112	0.11
	0.5	670	710	123	0.12
	0.6	-	-	-	-
	0.7	-	-	-	-
	0.8	-	-	-	-
T2	0.1	1725	800	416	0.45
	0.2	1675	830	427	0.47
	0.3	1630	855	441	0.48
	0.4	1585	885	457	0.5
	0.5	1540	915	469	0.52
	0.6	1495	945	484	0.54
	0.7	1445	975	495	0.55
	0.8	1400	1005	512	0.57
T3 **	0.1	1070	570	134	0.13
	0.2	1010	615	142	0.14
	0.3	950	655	152	0.15
	0.4	920	700	159	0.16
	0.5	830	745	170	0.17
	0.6	735	785	178	0.18
	0.7	645	825	186	0.19
	0.8	-	-	-	-
T4	0.1	1830	840	479	0.53
	0.2	1780	865	492	0.54
	0.3	1735	895	506	0.56
	0.4	1695	920	524	0.58
	0.5	1655	945	536	0.59
	0.6	1610	975	551	0.61
	0.7	1570	1005	564	0.63
	0.8	1525	1035	581	0.65
T5	0.1	1895	865	524	0.58
	0.2	1850	890	538	0.60
	0.3	1805	915	553	0.61
	0.4	1760	940	570	0.63
	0.5	1725	970	584	0.65
	0.6	1685	995	599	0.67
	0.7	1645	1020	612	0.68
	0.8	1605	1050	629	0.70

DSG0483D 70K HORIZONTAL

SPEED TAP	EXTERNAL STATIC PRESSURE (ESP) IN W. C.	AIRFLOW (CFM)	RPM	WATTS	BHP
T1 *	0.1	960	500	87	0.09
	0.2	900	535	93	0.09
	0.3	835	580	102	0.10
	0.4	805	625	106	0.11
	0.5	700	675	117	0.12
	0.6	-	-	-	-
	0.7	-	-	-	-
	0.8	-	-	-	-
T2	0.1	1800	760	394	0.43
	0.2	1750	790	405	0.45
	0.3	1705	810	419	0.46
	0.4	1655	840	434	0.48
	0.5	1610	870	446	0.49
	0.6	1560	900	460	0.51
	0.7	1510	925	470	0.52
	0.8	1465	955	487	0.54
T3 **	0.1	1120	540	127	0.13
	0.2	1055	585	135	0.14
	0.3	995	620	144	0.15
	0.4	960	665	151	0.16
	0.5	865	710	162	0.17
	0.6	770	745	169	0.17
	0.7	675	785	177	0.18
	0.8	-	-	-	-
T4	0.1	1910	800	455	0.50
	0.2	1860	820	467	0.52
	0.3	1815	850	481	0.53
	0.4	1770	875	498	0.55
	0.5	1730	900	509	0.57
	0.6	1680	925	523	0.58
	0.7	1640	955	536	0.60
	0.8	1595	985	552	0.62
T5	0.1	1980	820	498	0.55
	0.2	1935	845	511	0.57
	0.3	1885	870	525	0.58
	0.4	1840	895	542	0.60
	0.5	1805	920	555	0.62
	0.6	1760	945	569	0.63
	0.7	1720	970	581	0.65
	0.8	1675	1000	598	0.67

* In DSG0361D 45K, DSG0361D 90K, DSG0363D 45K, DSG0363D 70K, DSG0363D 90K, DSG0364D 45K, DSG0364D 70K, DSG0364D / DSG0367D 90K, DSG0481D 90K, DSG0481D 115K, DSG0483D 70K, DSG0483D 90K, DSG0483D 115K, DSG0484D 70K, DSG0484D 90K, DSG0484D / DSG0487D 115K, DSG0601D 90K, DSG0601D 140K, DSG0603D 90K, DSG0603D 115K, DSG0603D 140K, DSG0604D 90K, DSG0604D 115K, AND DSG0604D / DSG0607D 140K DOWNSHOT and HORIZONTAL Tables, T1 values are for fan mode only

** IN DSG0361D 45K, DSG0361D 90K, DSG0363D 45K, DSG0363D 70K, DSG0363D 90K, DSG0364D 45K, DSG0364D 70K, DSG0364D / DSG0367D 90K, DSG0481D 90K, DSG0481D 115K, DSG0483D 70K, DSG0483D 90K, DSG0483D 115K, DSG0484D 70K, DSG0484D 90K, DSG0484D / DSG0487D 115K, DSG0601D 90K, DSG0601D 140K, DSG0603D 90K, DSG0603D 115K, DSG0603D 140K, DSG0604D 90K, DSG0604D 115K, and DSG0604D / DSG0607D 140K DOWNSHOT and HORIZONTAL Tables, T3 values are for heat mode only

DSG0483D 90K DOWNSHOT

SPEED TAP	EXTERNAL STATIC PRESSURE (ESP) IN W. C.	AIRFLOW (CFM)	RPM	WATTS	BHP
T1 *	0.1	1245	630	194	0.20
	0.2	1190	670	202	0.21
	0.3	1135	705	213	0.22
	0.4	1100	750	223	0.24
	0.5	1025	790	234	0.25
	0.6	945	825	244	0.26
	0.7	865	865	253	0.27
	0.8	795	900	263	0.28
T2	0.1	1725	800	415	0.45
	0.2	1675	830	426	0.47
	0.3	1630	855	440	0.48
	0.4	1585	885	457	0.5
	0.5	1540	915	469	0.52
	0.6	1495	945	484	0.53
	0.7	1450	975	495	0.55
	0.8	1405	1005	512	0.57
T3 **	0.1	1550	740	322	0.35
	0.2	1500	770	332	0.36
	0.3	1450	800	345	0.37
	0.4	1410	835	359	0.39
	0.5	1355	865	370	0.40
	0.6	1295	900	383	0.42
	0.7	1240	930	394	0.43
	0.8	1200	965	409	0.45
T4	0.1	1830	840	479	0.53
	0.2	1780	865	492	0.54
	0.3	1735	895	506	0.56
	0.4	1695	920	524	0.58
	0.5	1655	945	536	0.59
	0.6	1610	975	551	0.61
	0.7	1570	1005	564	0.63
	0.8	1525	1035	581	0.65
T5	0.1	1895	865	524	0.58
	0.2	1850	890	538	0.60
	0.3	1805	915	553	0.61
	0.4	1760	940	570	0.63
	0.5	1725	970	584	0.65
	0.6	1685	995	599	0.67
	0.7	1645	1020	612	0.68
	0.8	1605	1050	629	0.70

DSG0483D 90K HORIZONTAL

SPEED TAP	EXTERNAL STATIC PRESSURE (ESP) IN W. C.	AIRFLOW (CFM)	RPM	WATTS	BHP
T1 *	0.1	1300	600	184	0.19
	0.2	1245	635	192	0.20
	0.3	1185	670	202	0.21
	0.4	1150	715	212	0.22
	0.5	1070	750	222	0.24
	0.6	990	785	232	0.25
	0.7	905	820	240	0.26
	0.8	830	855	250	0.27
T2	0.1	1800	760	394	0.43
	0.2	1750	790	405	0.45
	0.3	1705	810	418	0.46
	0.4	1655	840	433	0.48
	0.5	1610	870	445	0.49
	0.6	1565	900	459	0.51
	0.7	1515	925	469	0.52
	0.8	1470	955	487	0.54
T3 **	0.1	1620	705	306	0.33
	0.2	1570	730	315	0.34
	0.3	1515	760	328	0.35
	0.4	1475	795	341	0.37
	0.5	1415	820	352	0.38
	0.6	1355	855	364	0.40
	0.7	1295	885	374	0.41
	0.8	1240	915	389	0.43
T4	0.1	1910	800	455	0.50
	0.2	1860	820	467	0.52
	0.3	1815	850	481	0.53
	0.4	1770	875	498	0.55
	0.5	1730	900	509	0.57
	0.6	1680	925	523	0.58
	0.7	1640	955	536	0.60
	0.8	1595	985	552	0.62
T5	0.1	1980	820	498	0.55
	0.2	1935	845	511	0.57
	0.3	1885	870	525	0.58
	0.4	1840	895	542	0.60
	0.5	1805	920	555	0.62
	0.6	1760	945	569	0.63
	0.7	1720	970	581	0.65
	0.8	1675	1000	598	0.67

* In DSG0361D 45K, DSG0361D 90K, DSG0363D 45K, DSG0363D 70K, DSG0363D 90K, DSG0364D 45K, DSG0364D 70K, DSG0364D / DSG0367D 90K, DSG0481D 90K, DSG0481D 115K, DSG0483D 70K, DSG0483D 90K, DSG0483D 115K, DSG0484D 70K, DSG0484D 90K, DSG0484D / DSG0487D 115K, DSG0601D 90K, DSG0601D 140K, DSG0603D 90K, DSG0603D 115K, DSG0603D 140K, DSG0604D 90K, DSG0604D 115K, AND DSG0604D / DSG0607D 140K DOWNSHOT and HORIZONTAL Tables, T1 values are for fan mode only

** IN DSG0361D 45K, DSG0361D 90K, DSG0363D 45K, DSG0363D 70K, DSG0363D 90K, DSG0364D 45K, DSG0364D 70K, DSG0364D / DSG0367D 90K, DSG0481D 90K, DSG0481D 115K, DSG0483D 70K, DSG0483D 90K, DSG0483D 115K, DSG0484D 70K, DSG0484D 90K, DSG0484D / DSG0487D 115K, DSG0601D 90K, DSG0601D 140K, DSG0603D 90K, DSG0603D 115K, DSG0603D 140K, DSG0604D 90K, DSG0604D 115K, and DSG0604D / DSG0607D 140K DOWNSHOT and HORIZONTAL Tables, T3 values are for heat mode only

DSG0483D 115K DOWNSHOT

SPEED TAP	EXTERNAL STATIC PRESSURE (ESP) IN W. C.	AIRFLOW (CFM)	RPM	WATTS	BHP
T1 *	0.1	1530	730	313	0.33
	0.2	1480	765	323	0.35
	0.3	1430	795	336	0.36
	0.4	1390	830	350	0.38
	0.5	1335	860	361	0.39
	0.6	1275	895	374	0.41
	0.7	1220	930	384	0.42
	0.8	1165	960	399	0.44
T2	0.1	1725	800	416	0.45
	0.2	1675	830	427	0.47
	0.3	1630	855	441	0.48
	0.4	1585	885	457	0.5
	0.5	1540	915	469	0.52
	0.6	1495	945	484	0.54
	0.7	1445	975	495	0.55
	0.8	1400	1005	512	0.57
T3 **	0.1	1885	860	519	0.57
	0.2	1840	885	533	0.59
	0.3	1795	915	547	0.61
	0.4	1755	940	565	0.63
	0.5	1715	965	578	0.64
	0.6	1675	995	594	0.66
	0.7	1635	1020	607	0.68
	0.8	1595	1050	624	0.70
T4	0.1	1830	840	479	0.53
	0.2	1780	865	492	0.54
	0.3	1735	895	506	0.56
	0.4	1695	920	524	0.58
	0.5	1655	945	536	0.59
	0.6	1610	975	551	0.61
	0.7	1570	1005	564	0.63
	0.8	1525	1035	581	0.65
T5	0.1	1895	865	524	0.58
	0.2	1850	890	538	0.60
	0.3	1805	915	553	0.61
	0.4	1760	940	570	0.63
	0.5	1725	970	584	0.65
	0.6	1685	995	599	0.67
	0.7	1645	1020	612	0.68
	0.8	1605	1050	629	0.70

DSG0483D 115K HORIZONTAL

SPEED TAP	EXTERNAL STATIC PRESSURE (ESP) IN W. C.	AIRFLOW (CFM)	RPM	WATTS	BHP
T1 *	0.1	1600	695	297	0.32
	0.2	1545	725	307	0.33
	0.3	1495	755	319	0.35
	0.4	1455	790	333	0.36
	0.5	1395	815	343	0.37
	0.6	1330	850	355	0.39
	0.7	1275	885	365	0.40
	0.8	1215	910	379	0.42
T2	0.1	1800	760	394	0.43
	0.2	1750	790	406	0.45
	0.3	1705	810	419	0.46
	0.4	1655	840	434	0.48
	0.5	1610	870	446	0.49
	0.6	1560	900	460	0.51
	0.7	1510	925	470	0.52
	0.8	1465	955	487	0.54
T3 **	0.1	1970	815	493	0.54
	0.2	1925	840	506	0.56
	0.3	1875	870	520	0.58
	0.4	1835	895	537	0.60
	0.5	1790	915	549	0.61
	0.6	1750	945	564	0.63
	0.7	1710	970	577	0.65
	0.8	1665	1000	593	0.67
T4	0.1	1910	800	455	0.50
	0.2	1860	820	467	0.52
	0.3	1815	850	481	0.53
	0.4	1770	875	498	0.55
	0.5	1730	900	509	0.57
	0.6	1680	925	523	0.58
	0.7	1640	955	536	0.60
	0.8	1595	985	552	0.62
T5	0.1	1980	820	498	0.55
	0.2	1935	845	511	0.57
	0.3	1885	870	525	0.58
	0.4	1840	895	542	0.60
	0.5	1805	920	555	0.62
	0.6	1760	945	569	0.63
	0.7	1720	970	581	0.65
	0.8	1675	1000	598	0.67

* In DSG0361D 45K, DSG0361D 90K, DSG0363D 45K, DSG0363D 70K, DSG0363D 90K, DSG0364D 45K, DSG0364D 70K, DSG0364D / DSG0367D 90K, DSG0481D 90K, DSG0481D 115K, DSG0483D 70K, DSG0483D 90K, DSG0483D 115K, DSG0484D 70K, DSG0484D 90K, DSG0484D / DSG0487D 115K, DSG0601D 90K, DSG0601D 140K, DSG0603D 90K, DSG0603D 115K, DSG0603D 140K, DSG0604D 90K, DSG0604D 115K, AND DSG0604D / DSG0607D 140K DOWNSHOT and HORIZONTAL Tables, T1 values are for fan mode only

** IN DSG0361D 45K, DSG0361D 90K, DSG0363D 45K, DSG0363D 70K, DSG0363D 90K, DSG0364D 45K, DSG0364D 70K, DSG0364D / DSG0367D 90K, DSG0481D 90K, DSG0481D 115K, DSG0483D 70K, DSG0483D 90K, DSG0483D 115K, DSG0484D 70K, DSG0484D 90K, DSG0484D / DSG0487D 115K, DSG0601D 90K, DSG0601D 140K, DSG0603D 90K, DSG0603D 115K, DSG0603D 140K, DSG0604D 90K, DSG0604D 115K, and DSG0604D / DSG0607D 140K DOWNSHOT and HORIZONTAL Tables, T3 values are for heat mode only

DSG0484D 70K DOWNSHOT

SPEED TAP	EXTERNAL STATIC PRESSURE (ESP) IN W. C.	AIRFLOW (CFM)	RPM	WATTS	BHP
T1 *	0.1	1010	570	120	0.12
	0.2	960	595	128	0.13
	0.3	885	640	136	0.14
	0.4	835	690	140	0.15
	0.5	775	725	157	0.16
	0.6	720	770	164	0.17
	0.7	640	825	177	0.18
	0.8	575	850	184	0.19
T2	0.1	1740	805	415	0.46
	0.2	1710	830	426	0.47
	0.3	1645	860	441	0.49
	0.4	1610	890	452	0.5
	0.5	1580	910	462	0.51
	0.6	1530	940	479	0.53
	0.7	1485	975	491	0.55
	0.8	1435	1000	502	0.57
T3 **	0.1	1210	635	183	0.19
	0.2	1170	660	193	0.20
	0.3	1090	700	202	0.21
	0.4	1045	745	207	0.23
	0.5	995	775	223	0.24
	0.6	940	815	232	0.25
	0.7	875	865	245	0.26
	0.8	810	890	253	0.27
T4	0.1	1815	835	461	0.51
	0.2	1790	860	472	0.52
	0.3	1725	885	488	0.54
	0.4	1690	915	500	0.56
	0.5	1660	935	510	0.57
	0.6	1610	965	527	0.59
	0.7	1570	995	539	0.61
	0.8	1525	1020	551	0.62
T5	0.1	1880	855	502	0.55
	0.2	1855	880	513	0.57
	0.3	1795	905	529	0.59
	0.4	1755	935	542	0.61
	0.5	1730	955	552	0.62
	0.6	1680	985	570	0.64
	0.7	1640	1010	582	0.65
	0.8	1600	1035	594	0.67

DSG0484D 70K HORIZONTAL

SPEED TAP	EXTERNAL STATIC PRESSURE (ESP) IN W. C.	AIRFLOW (CFM)	RPM	WATTS	BHP
T1 *	0.1	1040	540	114	0.12
	0.2	990	565	122	0.12
	0.3	910	610	129	0.13
	0.4	860	655	133	0.14
	0.5	800	690	149	0.15
	0.6	740	730	156	0.16
	0.7	660	785	168	0.17
	0.8	590	810	175	0.18
T2	0.1	1790	765	394	0.43
	0.2	1765	790	405	0.45
	0.3	1695	815	419	0.46
	0.4	1660	845	430	0.48
	0.5	1625	865	439	0.49
	0.6	1575	895	455	0.51
	0.7	1530	925	467	0.52
	0.8	1480	950	477	0.54
T3 **	0.1	1245	605	174	0.18
	0.2	1205	625	183	0.19
	0.3	1125	665	192	0.20
	0.4	1075	710	197	0.22
	0.5	1025	735	212	0.22
	0.6	970	775	220	0.24
	0.7	900	820	233	0.25
	0.8	835	845	240	0.26
T4	0.1	1870	795	438	0.48
	0.2	1845	815	448	0.50
	0.3	1775	840	464	0.51
	0.4	1740	870	475	0.53
	0.5	1710	890	485	0.54
	0.6	1660	915	501	0.56
	0.7	1615	945	512	0.58
	0.8	1570	970	523	0.59
T5	0.1	1935	810	477	0.52
	0.2	1910	835	487	0.54
	0.3	1850	860	503	0.56
	0.4	1810	890	515	0.58
	0.5	1780	905	524	0.59
	0.6	1730	935	542	0.61
	0.7	1690	960	553	0.62
	0.8	1650	985	564	0.64

* In DSG0361D 45K, DSG0361D 90K, DSG0363D 45K, DSG0363D 70K, DSG0363D 90K, DSG0364D 45K, DSG0364D 70K, DSG0364D / DSG0367D 90K, DSG0481D 90K, DSG0481D 115K, DSG0483D 70K, DSG0483D 90K, DSG0483D 115K, DSG0484D 70K, DSG0484D 90K, DSG0484D / DSG0487D 115K, DSG0601D 90K, DSG0601D 140K, DSG0603D 90K, DSG0603D 115K, DSG0603D 140K, DSG0604D 90K, DSG0604D 115K, AND DSG0604D / DSG0607D 140K DOWNSHOT and HORIZONTAL Tables, T1 values are for fan mode only

** IN DSG0361D 45K, DSG0361D 90K, DSG0363D 45K, DSG0363D 70K, DSG0363D 90K, DSG0364D 45K, DSG0364D 70K, DSG0364D / DSG0367D 90K, DSG0481D 90K, DSG0481D 115K, DSG0483D 70K, DSG0483D 90K, DSG0483D 115K, DSG0484D 70K, DSG0484D 90K, DSG0484D / DSG0487D 115K, DSG0601D 90K, DSG0601D 140K, DSG0603D 90K, DSG0603D 115K, DSG0603D 140K, DSG0604D 90K, DSG0604D 115K, and DSG0604D / DSG0607D 140K DOWNSHOT and HORIZONTAL Tables, T3 values are for heat mode only

DSG0484D 90K DOWNSHOT

SPEED TAP	EXTERNAL STATIC PRESSURE (ESP) IN W. C.	AIRFLOW (CFM)	RPM	WATTS	BHP
T1 *	0.1	1230	640	191	0.20
	0.2	1190	665	200	0.21
	0.3	1115	705	210	0.22
	0.4	1070	750	215	0.24
	0.5	1020	780	231	0.25
	0.6	965	820	240	0.26
	0.7	900	870	253	0.27
	0.8	835	895	261	0.28
T2	0.1	1740	805	415	0.46
	0.2	1710	830	426	0.47
	0.3	1640	860	442	0.49
	0.4	1605	890	453	0.5
	0.5	1575	910	463	0.52
	0.6	1530	940	480	0.53
	0.7	1485	975	492	0.55
	0.8	1435	1000	503	0.57
T3 **	0.1	1545	745	316	0.34
	0.2	1510	770	327	0.36
	0.3	1440	800	339	0.37
	0.4	1400	835	348	0.39
	0.5	1365	860	360	0.40
	0.6	1310	895	374	0.41
	0.7	1255	930	386	0.43
	0.8	1205	955	397	0.44
T4	0.1	1815	835	461	0.51
	0.2	1790	860	472	0.52
	0.3	1725	885	488	0.54
	0.4	1690	915	500	0.56
	0.5	1660	935	510	0.57
	0.6	1610	965	527	0.59
	0.7	1570	995	539	0.61
	0.8	1525	1020	551	0.62
T5	0.1	1880	855	502	0.55
	0.2	1855	880	513	0.57
	0.3	1795	905	529	0.59
	0.4	1755	935	542	0.61
	0.5	1730	955	552	0.62
	0.6	1680	985	570	0.64
	0.7	1640	1010	582	0.65
	0.8	1600	1035	594	0.67

DSG0484D 90K HORIZONTAL

SPEED TAP	EXTERNAL STATIC PRESSURE (ESP) IN W. C.	AIRFLOW (CFM)	RPM	WATTS	BHP
T1 *	0.1	1265	610	181	0.19
	0.2	1225	630	190	0.20
	0.3	1150	670	200	0.21
	0.4	1100	715	204	0.22
	0.5	1050	740	219	0.23
	0.6	995	780	228	0.25
	0.7	925	825	240	0.26
	0.8	860	850	248	0.27
T2	0.1	1790	765	394	0.43
	0.2	1760	790	405	0.45
	0.3	1690	815	419	0.46
	0.4	1660	845	430	0.48
	0.5	1625	865	439	0.49
	0.6	1575	895	455	0.51
	0.7	1530	925	467	0.52
	0.8	1480	950	477	0.54
"T3 **"	0.1	1590	710	300	0.33
	0.2	1555	730	311	0.34
	0.3	1485	760	322	0.35
	0.4	1440	795	331	0.37
	0.5	1405	815	342	0.38
	0.6	1350	850	355	0.39
	0.7	1295	885	367	0.41
	0.8	1240	905	377	0.42
T4	0.1	1870	795	438	0.48
	0.2	1845	815	448	0.50
	0.3	1775	840	464	0.51
	0.4	1740	870	475	0.53
	0.5	1710	890	485	0.54
	0.6	1660	915	501	0.56
	0.7	1615	945	512	0.58
	0.8	1570	970	523	0.59
T5	0.1	1935	810	477	0.52
	0.2	1910	835	487	0.54
	0.3	1850	860	503	0.56
	0.4	1810	890	515	0.58
	0.5	1780	905	524	0.59
	0.6	1730	935	542	0.61
	0.7	1690	960	553	0.62
	0.8	1650	985	564	0.64

* In DSG0361D 45K, DSG0361D 90K, DSG0363D 45K, DSG0363D 70K, DSG0363D 90K, DSG0364D 45K, DSG0364D 70K, DSG0364D / DSG0367D 90K, DSG0481D 90K, DSG0481D 115K, DSG0483D 70K, DSG0483D 90K, DSG0483D 115K, DSG0484D 70K, DSG0484D 90K, DSG0484D / DSG0487D 115K, DSG0601D 90K, DSG0601D 140K, DSG0603D 90K, DSG0603D 115K, DSG0603D 140K, DSG0604D 90K, DSG0604D 115K, AND DSG0604D / DSG0607D 140K DOWNSHOT and HORIZONTAL Tables, T1 values are for fan mode only

** IN DSG0361D 45K, DSG0361D 90K, DSG0363D 45K, DSG0363D 70K, DSG0363D 90K, DSG0364D 45K, DSG0364D 70K, DSG0364D / DSG0367D 90K, DSG0481D 90K, DSG0481D 115K, DSG0483D 70K, DSG0483D 90K, DSG0483D 115K, DSG0484D 70K, DSG0484D 90K, DSG0484D / DSG0487D 115K, DSG0601D 90K, DSG0601D 140K, DSG0603D 90K, DSG0603D 115K, DSG0603D 140K, DSG0604D 90K, DSG0604D 115K, and DSG0604D / DSG0607D 140K DOWNSHOT and HORIZONTAL Tables, T3 values are for heat mode only

DSG0484D / DSG0487D 115K DOWNSHOT

SPEED TAP	EXTERNAL STATIC PRESSURE (ESP) IN W. C.	AIRFLOW (CFM)	RPM	WATTS	BHP
T1 *	0.1	1495	730	295	0.32
	0.2	1460	750	305	0.33
	0.3	1390	785	317	0.34
	0.4	1350	820	326	0.36
	0.5	1310	845	338	0.37
	0.6	1260	880	351	0.39
	0.7	1200	920	363	0.40
	0.8	1150	945	373	0.41
T2	0.1	1740	805	416	0.46
	0.2	1710	830	427	0.47
	0.3	1640	860	442	0.49
	0.4	1605	890	453	0.5
	0.5	1575	910	463	0.52
	0.6	1525	940	480	0.53
	0.7	1480	975	492	0.55
	0.8	1430	1000	503	0.57
T3 **	0.1	1865	850	491	0.54
	0.2	1840	875	503	0.56
	0.3	1775	900	519	0.57
	0.4	1740	930	531	0.59
	0.5	1715	950	541	0.61
	0.6	1665	980	559	0.63
	0.7	1625	1005	571	0.64
	0.8	1580	1030	583	0.66
T4	0.1	1815	835	461	0.51
	0.2	1790	860	472	0.52
	0.3	1725	885	488	0.54
	0.4	1690	915	500	0.56
	0.5	1660	935	510	0.57
	0.6	1610	965	527	0.59
	0.7	1570	995	539	0.61
	0.8	1525	1020	551	0.62
T5	0.1	1880	855	502	0.55
	0.2	1855	880	513	0.57
	0.3	1795	905	529	0.59
	0.4	1755	935	542	0.61
	0.5	1730	955	552	0.62
	0.6	1680	985	570	0.64
	0.7	1640	1010	582	0.65
	0.8	1600	1035	594	0.67

DSG0484D / DSG0487D 115K HORIZONTAL

SPEED TAP	EXTERNAL STATIC PRESSURE (ESP) IN W. C.	AIRFLOW (CFM)	RPM	WATTS	BHP
T1 **	0.1	1540	695	280	0.30
	0.2	1505	715	290	0.31
	0.3	1430	745	301	0.33
	0.4	1390	780	310	0.34
	0.5	1350	805	321	0.35
	0.6	1300	835	333	0.37
	0.7	1235	875	345	0.38
	0.8	1200	900	354	0.39
T2	0.1	1790	765	395	0.43
	0.2	1760	790	406	0.45
	0.3	1690	815	420	0.46
	0.4	1655	845	431	0.48
	0.5	1620	865	440	0.49
	0.6	1570	895	456	0.51
	0.7	1525	925	468	0.52
	0.8	1475	950	478	0.54
T3 **	0.1	1920	810	466	0.52
	0.2	1895	830	478	0.53
	0.3	1830	855	493	0.55
	0.4	1790	885	504	0.56
	0.5	1765	905	514	0.58
	0.6	1715	930	531	0.59
	0.7	1675	955	542	0.61
	0.8	1625	980	554	0.63
T4	0.1	1870	795	438	0.48
	0.2	1845	815	448	0.50
	0.3	1775	840	464	0.51
	0.4	1740	870	475	0.53
	0.5	1710	890	485	0.54
	0.6	1660	915	501	0.56
	0.7	1615	945	512	0.58
	0.8	1570	970	523	0.59
T5	0.1	1935	810	477	0.52
	0.2	1910	835	487	0.54
	0.3	1850	860	503	0.56
	0.4	1810	890	515	0.58
	0.5	1780	905	524	0.59
	0.6	1730	935	542	0.61
	0.7	1690	960	553	0.62
	0.8	1650	985	564	0.64

* In DSG0361D 45K, DSG0361D 90K, DSG0363D 45K, DSG0363D 70K, DSG0363D 90K, DSG0364D 45K, DSG0364D 70K, DSG0364D / DSG0367D 90K, DSG0481D 90K, DSG0481D 115K, DSG0483D 70K, DSG0483D 90K, DSG0483D 115K, DSG0484D 70K, DSG0484D 90K, DSG0484D / DSG0487D 115K, DSG0601D 90K, DSG0601D 140K, DSG0603D 90K, DSG0603D 115K, DSG0603D 140K, DSG0604D 90K, DSG0604D 115K, AND DSG0604D / DSG0607D 140K DOWNSHOT and HORIZONTAL Tables, T1 values are for fan mode only

** IN DSG0361D 45K, DSG0361D 90K, DSG0363D 45K, DSG0363D 70K, DSG0363D 90K, DSG0364D 45K, DSG0364D 70K, DSG0364D / DSG0367D 90K, DSG0481D 90K, DSG0481D 115K, DSG0483D 70K, DSG0483D 90K, DSG0483D 115K, DSG0484D 70K, DSG0484D 90K, DSG0484D / DSG0487D 115K, DSG0601D 90K, DSG0601D 140K, DSG0603D 90K, DSG0603D 115K, DSG0603D 140K, DSG0604D 90K, DSG0604D 115K, and DSG0604D / DSG0607D 140K DOWNSHOT and HORIZONTAL Tables, T3 values are for heat mode only

DSG0601D 90K DOWNSHOT

SPEED TAP	EXTERNAL STATIC PRESSURE (ESP) IN W. C.	AIRFLOW (CFM)	RPM	WATTS	BHP
T1 *	0.1	1075	575	137	0.14
	0.2	1015	615	144	0.15
	0.3	960	655	154	0.16
	0.4	925	705	162	0.17
	0.5	840	745	173	0.18
	0.6	-	-	-	-
	0.7	-	-	-	-
	0.8	-	-	-	-
T2	0.1	2020	910	581	0.65
	0.2	1970	930	595	0.66
	0.3	1930	960	611	0.68
	0.4	1890	975	629	0.70
	0.5	1855	1000	644	0.72
	0.6	1825	1025	660	0.74
	0.7	1790	1050	674	0.76
	0.8	1760	1080	693	0.78
T3 **	0.1	1495	720	296	0.32
	0.2	1445	750	306	0.33
	0.3	1395	785	318	0.34
	0.4	1355	820	333	0.36
	0.5	1295	850	343	0.37
	0.6	1235	885	356	0.39
	0.7	1175	920	366	0.40
	0.8	1120	955	380	0.42
T4	0.1	1915	870	540	0.60
	0.2	1870	895	554	0.61
	0.3	1825	925	569	0.63
	0.4	1785	950	586	0.65
	0.5	1745	975	600	0.67
	0.6	1710	1000	615	0.69
	0.7	1670	1030	629	0.71
	0.8	1625	1055	646	0.72
T5	0.1	2250	1005	860	0.96
	0.2	2205	1025	879	0.98
	0.3	2165	1050	896	1.00
	0.4	2130	1075	913	1.02
	0.5	2090	1095	934	1.04
	0.6	2055	1120	949	1.07
	0.7	2015	1140	950	1.09
	0.8	1970	1155	950	1.10

DSG0601D 90K HORIZONTAL

SPEED TAP	EXTERNAL STATIC PRESSURE (ESP) IN W. C.	AIRFLOW (CFM)	RPM	WATTS	BHP
T1 *	0.1	1125	545	130	0.13
	0.2	1060	585	137	0.14
	0.3	1005	620	146	0.15
	0.4	965	670	154	0.16
	0.5	880	710	164	0.17
	0.6	-	-	-	-
	0.7	-	-	-	-
	0.8	-	-	-	-
T2	0.1	2110	865	552	0.62
	0.2	2060	880	566	0.63
	0.3	2010	910	580	0.65
	0.4	1975	930	597	0.67
	0.5	1940	950	612	0.68
	0.6	1905	970	627	0.70
	0.7	1870	1000	639	0.72
	0.8	1845	1030	659	0.74
T3 **	0.1	1560	685	281	0.30
	0.2	1510	715	291	0.31
	0.3	1460	745	302	0.33
	0.4	1415	780	316	0.34
	0.5	1355	810	326	0.35
	0.6	1290	840	338	0.37
	0.7	1230	875	348	0.38
	0.8	1170	905	361	0.40
T4	0.1	2000	825	513	0.57
	0.2	1955	850	526	0.58
	0.3	1905	880	541	0.60
	0.4	1865	905	557	0.62
	0.5	1825	925	570	0.63
	0.6	1785	950	584	0.65
	0.7	1745	980	598	0.67
	0.8	1700	1000	614	0.69
T5	0.1	2350	955	817	0.91
	0.2	2305	975	835	0.93
	0.3	2260	1000	851	0.95
	0.4	2225	1020	867	0.97
	0.5	2185	1040	887	0.99
	0.6	2145	1065	902	1.01
	0.7	2105	1085	903	1.03
	0.8	2060	1095	903	1.04

* In DSG0361D 45K, DSG0361D 90K, DSG0363D 45K, DSG0363D 70K, DSG0363D 90K, DSG0364D 45K, DSG0364D 70K, DSG0364D / DSG0367D 90K, DSG0481D 90K, DSG0481D 115K, DSG0483D 70K, DSG0483D 90K, DSG0483D 115K, DSG0484D 70K, DSG0484D 90K, DSG0484D / DSG0487D 115K, DSG0601D 90K, DSG0601D 140K, DSG0603D 90K, DSG0603D 115K, DSG0603D 140K, DSG0604D 90K, DSG0604D 115K, AND DSG0604D / DSG0607D 140K DOWNSHOT and HORIZONTAL Tables, T1 values are for fan mode only

** IN DSG0361D 45K, DSG0361D 90K, DSG0363D 45K, DSG0363D 70K, DSG0363D 90K, DSG0364D 45K, DSG0364D 70K, DSG0364D / DSG0367D 90K, DSG0481D 90K, DSG0481D 115K, DSG0483D 70K, DSG0483D 90K, DSG0483D 115K, DSG0484D 70K, DSG0484D 90K, DSG0484D / DSG0487D 115K, DSG0601D 90K, DSG0601D 140K, DSG0603D 90K, DSG0603D 115K, DSG0603D 140K, DSG0604D 90K, DSG0604D 115K, and DSG0604D / DSG0607D 140K DOWNSHOT and HORIZONTAL Tables, T3 values are for heat mode only

DSG0601D 140K DOWNSHOT

SPEED TAP	EXTERNAL STATIC PRESSURE (ESP) IN W. C.	AIRFLOW (CFM)	RPM	WATTS	BHP
T1 *	0.1	1075	575	137	0.14
	0.2	1015	615	144	0.15
	0.3	960	655	154	0.16
	0.4	925	705	162	0.17
	0.5	840	745	173	0.18
	0.6	-	-	-	-
	0.7	-	-	-	-
	0.8	-	-	-	-
T2	0.1	1985	895	595	0.66
	0.2	1945	925	610	0.68
	0.3	1900	950	626	0.70
	0.4	1860	970	644	0.71
	0.5	1820	995	659	0.73
	0.6	1785	1020	674	0.75
	0.7	1750	1045	689	0.77
	0.8	1710	1075	705	0.79
T3 **	0.1	1995	900	603	0.67
	0.2	1955	930	618	0.69
	0.3	1910	955	634	0.71
	0.4	1870	975	652	0.72
	0.5	1830	1000	667	0.74
	0.6	1795	1025	682	0.76
	0.7	1760	1050	697	0.78
	0.8	1720	1080	713	0.80
T4	0.1	1915	870	540	0.60
	0.2	1870	895	554	0.61
	0.3	1825	925	569	0.63
	0.4	1785	950	586	0.65
	0.5	1745	975	600	0.67
	0.6	1710	1000	615	0.69
	0.7	1670	1030	629	0.71
	0.8	1625	1055	646	0.72
T5	0.1	2250	1005	860	0.96
	0.2	2205	1025	879	0.98
	0.3	2165	1050	896	1.00
	0.4	2130	1075	913	1.02
	0.5	2090	1095	934	1.04
	0.6	2055	1120	949	1.07
	0.7	2015	1140	950	1.09
	0.8	1970	1155	950	1.10

DSG0601D 140K HORIZONTAL

SPEED TAP	EXTERNAL STATIC PRESSURE (ESP) IN W. C.	AIRFLOW (CFM)	RPM	WATTS	BHP
T1 *	0.1	1125	545	130	0.13
	0.2	1060	585	137	0.14
	0.3	1005	620	146	0.15
	0.4	965	670	154	0.16
	0.5	880	710	164	0.17
	0.6	-	-	-	-
	0.7	-	-	-	-
	0.8	-	-	-	-
T2	0.1	2075	850	566	0.63
	0.2	2035	880	580	0.65
	0.3	1985	900	594	0.66
	0.4	1945	920	611	0.68
	0.5	1900	945	626	0.70
	0.6	1865	970	640	0.72
	0.7	1825	995	654	0.73
	0.8	1785	1020	669	0.75
T3 **	0.1	2085	855	573	0.63
	0.2	2045	885	587	0.66
	0.3	1995	905	602	0.67
	0.4	1955	925	619	0.69
	0.5	1910	950	634	0.71
	0.6	1875	975	648	0.72
	0.7	1840	1000	662	0.74
	0.8	1795	1025	677	0.76
T4	0.1	2000	825	513	0.57
	0.2	1955	850	526	0.58
	0.3	1905	880	541	0.60
	0.4	1865	905	557	0.62
	0.5	1825	925	570	0.63
	0.6	1785	950	584	0.65
	0.7	1745	980	598	0.67
	0.8	1700	1000	614	0.69
T5	0.1	2350	955	817	0.91
	0.2	2305	975	835	0.93
	0.3	2260	1000	851	0.95
	0.4	2225	1020	867	0.97
	0.5	2185	1040	887	0.99
	0.6	2145	1065	902	1.01
	0.7	2105	1085	903	1.03
	0.8	2060	1095	903	1.04

* In DSG0361D 45K, DSG0361D 90K, DSG0363D 45K, DSG0363D 70K, DSG0363D 90K, DSG0364D 45K, DSG0364D 70K, DSG0364D / DSG0367D 90K, DSG0481D 90K, DSG0481D 115K, DSG0483D 70K, DSG0483D 90K, DSG0483D 115K, DSG0484D 70K, DSG0484D 90K, DSG0484D / DSG0487D 115K, DSG0601D 90K, DSG0601D 140K, DSG0603D 90K, DSG0603D 115K, DSG0603D 140K, DSG0604D 90K, DSG0604D 115K, AND DSG0604D / DSG0607D 140K DOWNSHOT and HORIZONTAL Tables, T1 values are for fan mode only

** IN DSG0361D 45K, DSG0361D 90K, DSG0363D 45K, DSG0363D 70K, DSG0363D 90K, DSG0364D 45K, DSG0364D 70K, DSG0364D / DSG0367D 90K, DSG0481D 90K, DSG0481D 115K, DSG0483D 70K, DSG0483D 90K, DSG0483D 115K, DSG0484D 70K, DSG0484D 90K, DSG0484D / DSG0487D 115K, DSG0601D 90K, DSG0601D 140K, DSG0603D 90K, DSG0603D 115K, DSG0603D 140K, DSG0604D 90K, DSG0604D 115K, and DSG0604D / DSG0607D 140K DOWNSHOT and HORIZONTAL Tables, T3 values are for heat mode only

DSG0603D 90K DOWNSHOT

SPEED TAP	EXTERNAL STATIC PRESSURE (ESP) IN W. C.	AIRFLOW (CFM)	RPM	WATTS	BHP
T1 *	0.1	990	545	111	0.11
	0.2	925	590	118	0.12
	0.3	870	630	127	0.13
	0.4	840	680	133	0.14
	0.5	745	725	144	0.14
	0.6	-	-	-	-
	0.7	-	-	-	-
	0.8	-	-	-	-
T2	0.1	2020	910	581	0.65
	0.2	1970	930	595	0.66
	0.3	1930	960	611	0.68
	0.4	1890	975	629	0.70
	0.5	1855	1000	644	0.72
	0.6	1825	1025	660	0.74
	0.7	1790	1050	674	0.76
	0.8	1760	1080	693	0.78
T3 **	0.1	1495	720	296	0.32
	0.2	1445	750	306	0.33
	0.3	1395	785	318	0.34
	0.4	1355	820	333	0.36
	0.5	1295	850	343	0.37
	0.6	1235	885	356	0.39
	0.7	1175	920	366	0.40
	0.8	1120	955	380	0.42
T4	0.1	1915	870	540	0.60
	0.2	1870	895	554	0.61
	0.3	1825	925	569	0.63
	0.4	1785	950	586	0.65
	0.5	1745	975	600	0.67
	0.6	1710	1000	615	0.69
	0.7	1670	1030	629	0.71
	0.8	1625	1055	646	0.72
T5	0.1	2250	1005	860	0.96
	0.2	2205	1025	879	0.98
	0.3	2165	1050	896	1.00
	0.4	2130	1075	913	1.02
	0.5	2090	1095	934	1.04
	0.6	2055	1120	949	1.07
	0.7	2015	1140	950	1.09
	0.8	1970	1155	950	1.10

DSG0603D 90K HORIZONTAL

SPEED TAP	EXTERNAL STATIC PRESSURE (ESP) IN W. C.	AIRFLOW (CFM)	RPM	WATTS	BHP
T1 *	0.1	1035	520	105	0.10
	0.2	965	560	112	0.11
	0.3	910	600	121	0.12
	0.4	880	645	126	0.13
	0.5	780	690	137	0.14
	0.6	-	-	-	-
	0.7	-	-	-	-
	0.8	-	-	-	-
T2	0.1	2110	865	552	0.62
	0.2	2060	880	566	0.63
	0.3	2010	910	580	0.65
	0.4	1975	930	597	0.67
	0.5	1940	950	612	0.68
	0.6	1905	970	627	0.70
	0.7	1870	1000	639	0.72
	0.8	1845	1030	659	0.74
T3 **	0.1	1560	685	281	0.30
	0.2	1510	715	291	0.31
	0.3	1460	745	302	0.33
	0.4	1415	780	316	0.34
	0.5	1355	810	326	0.35
	0.6	1290	840	338	0.37
	0.7	1230	875	348	0.38
	0.8	1170	905	361	0.40
T4	0.1	2000	825	513	0.57
	0.2	1955	850	526	0.58
	0.3	1905	880	541	0.60
	0.4	1865	905	557	0.62
	0.5	1825	925	570	0.63
	0.6	1785	950	584	0.65
	0.7	1745	980	598	0.67
	0.8	1700	1000	614	0.69
T5	0.1	2350	955	817	0.91
	0.2	2305	975	835	0.93
	0.3	2260	1000	851	0.95
	0.4	2225	1020	867	0.97
	0.5	2185	1040	887	0.99
	0.6	2145	1065	902	1.01
	0.7	2105	1085	903	1.03
	0.8	2060	1095	903	1.04

* In DSG0361D 45K, DSG0361D 90K, DSG0363D 45K, DSG0363D 70K, DSG0363D 90K, DSG0364D 45K, DSG0364D 70K, DSG0364D / DSG0367D 90K, DSG0481D 90K, DSG0481D 115K, DSG0483D 70K, DSG0483D 90K, DSG0483D 115K, DSG0484D 70K, DSG0484D 90K, DSG0484D / DSG0487D 115K, DSG0601D 90K, DSG0601D 140K, DSG0603D 90K, DSG0603D 115K, DSG0603D 140K, DSG0604D 90K, DSG0604D 115K, AND DSG0604D / DSG0607D 140K DOWNSHOT and HORIZONTAL Tables, T1 values are for fan mode only

** IN DSG0361D 45K, DSG0361D 90K, DSG0363D 45K, DSG0363D 70K, DSG0363D 90K, DSG0364D 45K, DSG0364D 70K, DSG0364D / DSG0367D 90K, DSG0481D 90K, DSG0481D 115K, DSG0483D 70K, DSG0483D 90K, DSG0483D 115K, DSG0484D 70K, DSG0484D 90K, DSG0484D / DSG0487D 115K, DSG0601D 90K, DSG0601D 140K, DSG0603D 90K, DSG0603D 115K, DSG0603D 140K, DSG0604D 90K, DSG0604D 115K, and DSG0604D / DSG0607D 140K DOWNSHOT and HORIZONTAL Tables, T3 values are for heat mode only

DSG0603D 115K DOWNSHOT

SPEED TAP	EXTERNAL STATIC PRESSURE (ESP) IN W. C.	AIRFLOW (CFM)	RPM	WATTS	BHP
T1 *	0.1	1055	570	130	0.13
	0.2	995	610	138	0.14
	0.3	940	650	147	0.15
	0.4	905	695	155	0.16
	0.5	815	740	165	0.17
	0.6	720	780	174	0.18
	0.7	625	820	182	0.19
	0.8	545	860	189	0.20
T2	0.1	2025	910	579	0.64
	0.2	1975	930	594	0.66
	0.3	1935	960	609	0.68
	0.4	1895	975	628	0.70
	0.5	1860	1000	642	0.72
	0.6	1830	1025	659	0.74
	0.7	1800	1055	672	0.76
	0.8	1765	1080	691	0.78
T3 **	0.1	1440	700	271	0.29
	0.2	1385	735	281	0.30
	0.3	1335	765	293	0.31
	0.4	1295	805	306	0.33
	0.5	1235	835	317	0.34
	0.6	1170	870	329	0.36
	0.7	1105	905	339	0.37
	0.8	1050	940	352	0.38
T4	0.1	1915	870	540	0.60
	0.2	1870	895	554	0.61
	0.3	1825	925	569	0.63
	0.4	1785	950	586	0.65
	0.5	1745	975	600	0.67
	0.6	1710	1000	615	0.69
	0.7	1670	1030	629	0.71
	0.8	1625	1055	646	0.72
T5	0.1	2250	1005	860	0.96
	0.2	2205	1025	879	0.98
	0.3	2165	1050	896	1.00
	0.4	2130	1075	913	1.02
	0.5	2090	1095	934	1.04
	0.6	2055	1120	949	1.07
	0.7	2015	1140	950	1.09
	0.8	1970	1155	950	1.10

DSG0603D 115K HORIZONTAL

SPEED TAP	EXTERNAL STATIC PRESSURE (ESP) IN W. C.	AIRFLOW (CFM)	RPM	WATTS	BHP
T1 *	0.1	1100	540	124	0.12
	0.2	1040	580	131	0.13
	0.3	980	620	140	0.14
	0.4	945	660	147	0.15
	0.5	850	705	157	0.16
	0.6	750	740	165	0.17
	0.7	655	780	173	0.18
	0.8	570	815	180	0.19
T2	0.1	2150	850	543	0.61
	0.2	2100	860	557	0.62
	0.3	2050	890	570	0.64
	0.4	2010	905	588	0.65
	0.5	1975	930	602	0.67
	0.6	1940	950	617	0.69
	0.7	1905	975	629	0.71
	0.8	1875	1000	648	0.73
T3 **	0.1	1440	700	271	0.29
	0.2	1385	735	281	0.30
	0.3	1335	765	293	0.31
	0.4	1295	805	306	0.33
	0.5	1235	835	317	0.34
	0.6	1170	870	329	0.36
	0.7	1105	905	339	0.37
	0.8	1050	940	352	0.38
T4	0.1	2000	825	513	0.57
	0.2	1955	850	526	0.58
	0.3	1905	880	541	0.60
	0.4	1865	905	557	0.62
	0.5	1825	925	570	0.63
	0.6	1785	950	584	0.65
	0.7	1745	980	598	0.67
	0.8	1700	1000	614	0.69
T5	0.1	2350	955	817	0.91
	0.2	2305	975	835	0.93
	0.3	2260	1000	851	0.95
	0.4	2225	1020	867	0.97
	0.5	2185	1040	887	0.99
	0.6	2145	1065	902	1.01
	0.7	2105	1085	903	1.03
	0.8	2060	1095	903	1.04

* In DSG0361D 45K, DSG0361D 90K, DSG0363D 45K, DSG0363D 70K, DSG0363D 90K, DSG0364D 45K, DSG0364D 70K, DSG0364D / DSG0367D 90K, DSG0481D 90K, DSG0481D 115K, DSG0483D 70K, DSG0483D 90K, DSG0483D 115K, DSG0484D 70K, DSG0484D 90K, DSG0484D / DSG0487D 115K, DSG0601D 90K, DSG0601D 140K, DSG0603D 90K, DSG0603D 115K, DSG0603D 140K, DSG0604D 90K, DSG0604D 115K, AND DSG0604D / DSG0607D 140K DOWNSHOT and HORIZONTAL Tables, T1 values are for fan mode only

** IN DSG0361D 45K, DSG0361D 90K, DSG0363D 45K, DSG0363D 70K, DSG0363D 90K, DSG0364D 45K, DSG0364D 70K, DSG0364D / DSG0367D 90K, DSG0481D 90K, DSG0481D 115K, DSG0483D 70K, DSG0483D 90K, DSG0483D 115K, DSG0484D 70K, DSG0484D 90K, DSG0484D / DSG0487D 115K, DSG0601D 90K, DSG0601D 140K, DSG0603D 90K, DSG0603D 115K, DSG0603D 140K, DSG0604D 90K, DSG0604D 115K, and DSG0604D / DSG0607D 140K DOWNSHOT and HORIZONTAL Tables, T3 values are for heat mode only

DSG0603D 140K DOWNSHOT

SPEED TAP	EXTERNAL STATIC PRESSURE (ESP) IN W. C.	AIRFLOW (CFM)	RPM	WATTS	BHP
T1 *	0.1	1830	840	479	0.53
	0.2	1780	865	492	0.54
	0.3	1735	895	506	0.56
	0.4	1695	920	524	0.58
	0.5	1655	945	536	0.59
	0.6	1610	975	551	0.61
	0.7	1570	1005	564	0.63
	0.8	1525	1035	581	0.65
T2	0.1	1985	895	595	0.66
	0.2	1945	925	610	0.68
	0.3	1900	950	626	0.70
	0.4	1860	970	644	0.71
	0.5	1820	995	659	0.73
	0.6	1785	1020	674	0.75
	0.7	1750	1045	689	0.77
	0.8	1710	1075	705	0.79
T3 **	0.1	1995	900	603	0.67
	0.2	1955	930	618	0.69
	0.3	1910	955	634	0.71
	0.4	1870	975	652	0.72
	0.5	1830	1000	667	0.74
	0.6	1795	1025	682	0.76
	0.7	1760	1050	697	0.78
	0.8	1720	1080	713	0.80
T4	0.1	1915	870	540	0.60
	0.2	1870	895	554	0.61
	0.3	1825	925	569	0.63
	0.4	1785	950	586	0.65
	0.5	1745	975	600	0.67
	0.6	1710	1000	615	0.69
	0.7	1670	1030	629	0.71
	0.8	1625	1055	646	0.72
T5	0.1	2250	1005	860	0.96
	0.2	2205	1025	879	0.98
	0.3	2165	1050	896	1.00
	0.4	2130	1075	913	1.02
	0.5	2090	1095	934	1.04
	0.6	2055	1120	949	1.07
	0.7	2015	1140	950	1.09
	0.8	1970	1155	950	1.10

DSG0603D 140K HORIZONTAL

SPEED TAP	EXTERNAL STATIC PRESSURE (ESP) IN W. C.	AIRFLOW (CFM)	RPM	WATTS	BHP
T1 *	0.1	1910	800	455	0.50
	0.2	1860	820	467	0.52
	0.3	1815	850	481	0.53
	0.4	1770	875	498	0.55
	0.5	1730	900	509	0.57
	0.6	1680	925	523	0.58
	0.7	1640	955	536	0.60
	0.8	1595	985	552	0.62
T2	0.1	2075	850	566	0.63
	0.2	2035	880	580	0.65
	0.3	1985	900	594	0.66
	0.4	1945	920	611	0.68
	0.5	1900	945	626	0.70
	0.6	1865	970	640	0.72
	0.7	1825	995	654	0.73
	0.8	1785	1020	669	0.75
T3 **	0.1	2085	855	573	0.63
	0.2	2045	885	587	0.66
	0.3	1995	905	602	0.67
	0.4	1955	925	619	0.69
	0.5	1910	950	634	0.71
	0.6	1875	975	648	0.72
	0.7	1840	1000	662	0.74
	0.8	1795	1025	677	0.76
T4	0.1	2000	825	513	0.57
	0.2	1955	850	526	0.58
	0.3	1905	880	541	0.60
	0.4	1865	905	557	0.62
	0.5	1825	925	570	0.63
	0.6	1785	950	584	0.65
	0.7	1745	980	598	0.67
	0.8	1700	1000	614	0.69
T5	0.1	2350	955	817	0.91
	0.2	2305	975	835	0.93
	0.3	2260	1000	851	0.95
	0.4	2225	1020	867	0.97
	0.5	2185	1040	887	0.99
	0.6	2145	1065	902	1.01
	0.7	2105	1085	903	1.03
	0.8	2060	1095	903	1.04

* In DSG0361D 45K, DSG0361D 90K, DSG0363D 45K, DSG0363D 70K, DSG0363D 90K, DSG0364D 45K, DSG0364D 70K, DSG0364D / DSG0367D 90K, DSG0481D 90K, DSG0481D 115K, DSG0483D 70K, DSG0483D 90K, DSG0483D 115K, DSG0484D 70K, DSG0484D 90K, DSG0484D / DSG0487D 115K, DSG0601D 90K, DSG0601D 140K, DSG0603D 90K, DSG0603D 115K, DSG0603D 140K, DSG0604D 90K, DSG0604D 115K, AND DSG0604D / DSG0607D 140K DOWNSHOT and HORIZONTAL Tables, T1 values are for fan mode only

** IN DSG0361D 45K, DSG0361D 90K, DSG0363D 45K, DSG0363D 70K, DSG0363D 90K, DSG0364D 45K, DSG0364D 70K, DSG0364D / DSG0367D 90K, DSG0481D 90K, DSG0481D 115K, DSG0483D 70K, DSG0483D 90K, DSG0483D 115K, DSG0484D 70K, DSG0484D 90K, DSG0484D / DSG0487D 115K, DSG0601D 90K, DSG0601D 140K, DSG0603D 90K, DSG0603D 115K, DSG0603D 140K, DSG0604D 90K, DSG0604D 115K, and DSG0604D / DSG0607D 140K DOWNSHOT and HORIZONTAL Tables, T3 values are for heat mode only

DSG0604D 90K DOWNSHOT

SPEED TAP	EXTERNAL STATIC PRESSURE (ESP) IN W. C.	AIRFLOW (CFM)	RPM	WATTS	BHP
T1 *	0.1	950	550	103	0.11
	0.2	895	575	110	0.11
	0.3	820	625	118	0.12
	0.4	770	670	120	0.13
	0.5	705	710	139	0.14
	0.6	650	755	145	0.15
	0.7	570	815	159	0.16
	0.8	500	840	164	0.16
T2	0.1	1990	895	575	0.64
	0.2	1960	915	587	0.65
	0.3	1905	940	605	0.67
	0.4	1870	970	619	0.69
	0.5	1845	985	628	0.70
	0.6	1795	1015	647	0.72
	0.7	1760	1040	660	0.74
	0.8	1725	1060	671	0.76
T3 **	0.1	1035	575	128	0.13
	0.2	985	600	136	0.14
	0.3	910	650	144	0.15
	0.4	860	695	147	0.16
	0.5	805	730	165	0.17
	0.6	750	775	172	0.18
	0.7	670	830	185	0.19
	0.8	605	855	192	0.20
T4	0.1	1975	890	565	0.63
	0.2	1945	910	576	0.64
	0.3	1890	935	594	0.66
	0.4	1855	965	608	0.68
	0.5	1830	980	617	0.69
	0.6	1780	1010	636	0.71
	0.7	1745	1035	649	0.73
	0.8	1705	1055	660	0.74
T5	0.1	2245	980	797	0.88
	0.2	2210	1000	807	0.89
	0.3	2170	1025	830	0.92
	0.4	2135	1050	847	0.94
	0.5	2115	1065	855	0.95
	0.6	2070	1095	878	0.98
	0.7	2040	1115	892	1.00
	0.8	2005	1130	902	1.01

DSG0604D 90K HORIZONTAL

SPEED TAP	EXTERNAL STATIC PRESSURE (ESP) IN W. C.	AIRFLOW (CFM)	RPM	WATTS	BHP
T1 *	0.1	980	525	97	0.10
	0.2	920	545	105	0.11
	0.3	845	595	112	0.11
	0.4	795	635	114	0.12
	0.5	725	675	132	0.13
	0.6	670	715	137	0.14
	0.7	585	775	151	0.15
	0.8	515	800	156	0.15
T2	0.1	2050	850	547	0.61
	0.2	2020	870	557	0.62
	0.3	1960	895	574	0.64
	0.4	1925	920	587	0.66
	0.5	1900	935	596	0.67
	0.6	1850	965	615	0.69
	0.7	1810	990	626	0.71
	0.8	1775	1005	637	0.72
T3 **	0.1	1065	545	121	0.13
	0.2	1015	570	129	0.13
	0.3	935	620	137	0.14
	0.4	885	660	140	0.15
	0.5	830	695	157	0.16
	0.6	775	735	163	0.17
	0.7	690	790	176	0.18
	0.8	625	810	182	0.19
T4	0.1	2035	845	537	0.60
	0.2	2005	865	547	0.61
	0.3	1945	890	564	0.63
	0.4	1910	915	577	0.64
	0.5	1885	930	586	0.66
	0.6	1835	960	605	0.68
	0.7	1795	985	616	0.69
	0.8	1755	1000	627	0.70
T5	0.1	2310	930	757	0.83
	0.2	2275	950	767	0.85
	0.3	2235	975	788	0.87
	0.4	2200	1000	804	0.89
	0.5	2180	1010	812	0.90
	0.6	2130	1040	834	0.93
	0.7	2100	1060	848	0.95
	0.8	2065	1075	857	0.96

* In DSG0361D 45K, DSG0361D 90K, DSG0363D 45K, DSG0363D 70K, DSG0363D 90K, DSG0364D 45K, DSG0364D 70K, DSG0364D / DSG0367D 90K, DSG0481D 90K, DSG0481D 115K, DSG0483D 70K, DSG0483D 90K, DSG0483D 115K, DSG0484D 70K, DSG0484D 90K, DSG0484D / DSG0487D 115K, DSG0601D 90K, DSG0601D 140K, DSG0603D 90K, DSG0603D 115K, DSG0603D 140K, DSG0604D 90K, DSG0604D 115K, AND DSG0604D / DSG0607D 140K DOWNSHOT and HORIZONTAL Tables, T1 values are for fan mode only

** IN DSG0361D 45K, DSG0361D 90K, DSG0363D 45K, DSG0363D 70K, DSG0363D 90K, DSG0364D 45K, DSG0364D 70K, DSG0364D / DSG0367D 90K, DSG0481D 90K, DSG0481D 115K, DSG0483D 70K, DSG0483D 90K, DSG0483D 115K, DSG0484D 70K, DSG0484D 90K, DSG0484D / DSG0487D 115K, DSG0601D 90K, DSG0601D 140K, DSG0603D 90K, DSG0603D 115K, DSG0603D 140K, DSG0604D 90K, DSG0604D 115K, and DSG0604D / DSG0607D 140K DOWNSHOT and HORIZONTAL Tables, T3 values are for heat mode only

DSG0604D 115K DOWNSHOT

SPEED TAP	EXTERNAL STATIC PRESSURE (ESP) IN W. C.	AIRFLOW (CFM)	RPM	WATTS	BHP
T1 *	0.1	1055	585	134	0.14
	0.2	1010	610	142	0.15
	0.3	930	655	150	0.16
	0.4	885	700	154	0.17
	0.5	825	735	171	0.17
	0.6	770	780	179	0.19
	0.7	695	835	192	0.20
	0.8	630	860	199	0.20
T2	0.1	2015	900	564	0.63
	0.2	1990	925	575	0.64
	0.3	1930	945	593	0.66
	0.4	1895	970	607	0.68
	0.5	1870	990	616	0.69
	0.6	1825	1015	636	0.71
	0.7	1790	1045	648	0.73
	0.8	1750	1060	660	0.75
T3 **	0.1	1425	705	265	0.29
	0.2	1390	730	276	0.30
	0.3	1315	765	287	0.31
	0.4	1275	805	295	0.33
	0.5	1235	830	308	0.34
	0.6	1180	865	320	0.35
	0.7	1125	905	332	0.37
	0.8	1070	930	342	0.38
T4	0.1	1975	890	565	0.63
	0.2	1945	910	576	0.64
	0.3	1890	935	594	0.66
	0.4	1855	965	608	0.68
	0.5	1830	980	617	0.69
	0.6	1780	1010	636	0.71
	0.7	1745	1035	649	0.73
	0.8	1705	1055	660	0.74
T5	0.1	2245	980	797	0.88
	0.2	2210	1000	807	0.89
	0.3	2170	1025	830	0.92
	0.4	2135	1050	847	0.94
	0.5	2115	1065	855	0.95
	0.6	2070	1095	878	0.98
	0.7	2040	1115	892	1.00
	0.8	2005	1130	902	1.01

DSG0604D 115K HORIZONTAL

SPEED TAP	EXTERNAL STATIC PRESSURE (ESP) IN W. C.	AIRFLOW (CFM)	RPM	WATTS	BHP
T1 *	0.1	1085	555	127	0.13
	0.2	1040	580	135	0.14
	0.3	960	620	143	0.15
	0.4	910	665	146	0.16
	0.5	850	700	163	0.17
	0.6	795	740	170	0.18
	0.7	715	795	182	0.19
	0.8	650	815	189	0.19
T2	0.1	2070	855	536	0.60
	0.2	2050	875	547	0.61
	0.3	1990	900	563	0.63
	0.4	1950	925	577	0.65
	0.5	1925	940	585	0.66
	0.6	1880	965	604	0.68
	0.7	1845	990	615	0.70
	0.8	1800	1010	626	0.71
T3 **	0.1	1470	670	252	0.27
	0.2	1430	695	262	0.28
	0.3	1355	725	273	0.29
	0.4	1315	765	280	0.31
	0.5	1270	790	292	0.32
	0.6	1215	820	304	0.33
	0.7	1160	860	316	0.35
	0.8	1100	885	325	0.36
T4	0.1	2035	845	537	0.60
	0.2	2005	865	547	0.61
	0.3	1945	890	564	0.63
	0.4	1910	915	577	0.64
	0.5	1885	930	586	0.66
	0.6	1835	960	605	0.68
	0.7	1795	985	616	0.69
	0.8	1755	1000	627	0.70
T5	0.1	2310	930	757	0.83
	0.2	2275	950	767	0.85
	0.3	2235	975	788	0.87
	0.4	2200	1000	804	0.89
	0.5	2180	1010	812	0.90
	0.6	2130	1040	834	0.93
	0.7	2100	1060	848	0.95
	0.8	2065	1075	857	0.96

* In DSG0361D 45K, DSG0361D 90K, DSG0363D 45K, DSG0363D 70K, DSG0363D 90K, DSG0364D 45K, DSG0364D 70K, DSG0364D / DSG0367D 90K, DSG0481D 90K, DSG0481D 115K, DSG0483D 70K, DSG0483D 90K, DSG0483D 115K, DSG0484D 70K, DSG0484D 90K, DSG0484D / DSG0487D 115K, DSG0601D 90K, DSG0601D 140K, DSG0603D 90K, DSG0603D 115K, DSG0603D 140K, DSG0604D 90K, DSG0604D 115K, AND DSG0604D / DSG0607D 140K DOWNSHOT and HORIZONTAL Tables, T1 values are for fan mode only

** IN DSG0361D 45K, DSG0361D 90K, DSG0363D 45K, DSG0363D 70K, DSG0363D 90K, DSG0364D 45K, DSG0364D 70K, DSG0364D / DSG0367D 90K, DSG0481D 90K, DSG0481D 115K, DSG0483D 70K, DSG0483D 90K, DSG0483D 115K, DSG0484D 70K, DSG0484D 90K, DSG0484D / DSG0487D 115K, DSG0601D 90K, DSG0601D 140K, DSG0603D 90K, DSG0603D 115K, DSG0603D 140K, DSG0604D 90K, DSG0604D 115K, and DSG0604D / DSG0607D 140K DOWNSHOT and HORIZONTAL Tables, T3 values are for heat mode only

DSG0604D / DSG0607D 140K DOWNSHOT

SPEED TAP	EXTERNAL STATIC PRESSURE (ESP) IN W. C.	AIRFLOW (CFM)	RPM	WATTS	BHP
T1 *	0.1	1835	840	471	0.52
	0.2	1805	865	482	0.54
	0.3	1740	890	498	0.55
	0.4	1705	920	510	0.57
	0.5	1680	940	520	0.58
	0.6	1630	970	538	0.60
	0.7	1590	1000	550	0.62
	0.8	1545	1020	561	0.63
T2	0.1	1990	895	576	0.64
	0.2	1960	915	587	0.65
	0.3	1905	940	605	0.67
	0.4	1870	970	619	0.69
	0.5	1845	985	628	0.70
	0.6	1800	1015	648	0.72
	0.7	1765	1040	660	0.74
	0.8	1720	1060	672	0.76
T3 **	0.1	1990	895	576	0.64
	0.2	1960	915	587	0.65
	0.3	1905	940	605	0.67
	0.4	1870	970	619	0.69
	0.5	1845	985	628	0.70
	0.6	1800	1015	648	0.72
	0.7	1765	1040	660	0.74
	0.8	1720	1060	672	0.76
T4	0.1	1975	890	565	0.63
	0.2	1945	910	576	0.64
	0.3	1890	935	594	0.66
	0.4	1855	965	608	0.68
	0.5	1830	980	617	0.69
	0.6	1780	1010	636	0.71
	0.7	1745	1035	649	0.73
	0.8	1705	1055	660	0.74
T5	0.1	2245	980	797	0.88
	0.2	2210	1000	807	0.89
	0.3	2170	1025	830	0.92
	0.4	2135	1050	847	0.94
	0.5	2115	1065	855	0.95
	0.6	2070	1095	878	0.98
	0.7	2040	1115	892	1.00
	0.8	2005	1130	902	1.01

DSG0604D / DSG0607D 140K HORIZONTAL

SPEED TAP	EXTERNAL STATIC PRESSURE (ESP) IN W. C.	AIRFLOW (CFM)	RPM	WATTS	BHP
T1 *	0.1	1890	800	447	0.50
	0.2	1860	820	458	0.51
	0.3	1790	845	473	0.52
	0.4	1755	875	485	0.54
	0.5	1730	895	494	0.55
	0.6	1680	920	511	0.57
	0.7	1640	950	522	0.59
	0.8	1590	970	533	0.60
T2	0.1	2050	850	547	0.61
	0.2	2020	870	558	0.62
	0.3	1960	895	575	0.64
	0.4	1925	920	588	0.66
	0.5	1900	935	597	0.67
	0.6	1855	965	615	0.69
	0.7	1820	990	627	0.71
	0.8	1770	1005	638	0.72
T3 **	0.1	2050	850	547	0.61
	0.2	2020	870	558	0.62
	0.3	1960	895	575	0.64
	0.4	1925	920	588	0.66
	0.5	1900	935	597	0.67
	0.6	1855	965	615	0.69
	0.7	1820	990	627	0.71
	0.8	1770	1005	638	0.72
T4	0.1	2035	845	537	0.60
	0.2	2005	865	547	0.61
	0.3	1945	890	564	0.63
	0.4	1910	915	577	0.64
	0.5	1885	930	586	0.66
	0.6	1835	960	605	0.68
	0.7	1795	985	616	0.69
	0.8	1755	1000	627	0.70
T5	0.1	2310	930	757	0.83
	0.2	2275	950	767	0.85
	0.3	2235	975	788	0.87
	0.4	2200	1000	804	0.89
	0.5	2180	1010	812	0.90
	0.6	2130	1040	834	0.93
	0.7	2100	1060	848	0.95
	0.8	2065	1075	857	0.96

* In DSG0361D 45K, DSG0361D 90K, DSG0363D 45K, DSG0363D 70K, DSG0363D 90K, DSG0364D 45K, DSG0364D 70K, DSG0364D / DSG0367D 90K, DSG0481D 90K, DSG0481D 115K, DSG0483D 70K, DSG0483D 90K, DSG0483D 115K, DSG0484D 70K, DSG0484D 90K, DSG0484D / DSG0487D 115K, DSG0601D 90K, DSG0601D 140K, DSG0603D 90K, DSG0603D 115K, DSG0603D 140K, DSG0604D 90K, DSG0604D 115K, AND DSG0604D / DSG0607D 140K DOWNSHOT and HORIZONTAL Tables, T1 values are for fan mode only

** IN DSG0361D 45K, DSG0361D 90K, DSG0363D 45K, DSG0363D 70K, DSG0363D 90K, DSG0364D 45K, DSG0364D 70K, DSG0364D / DSG0367D 90K, DSG0481D 90K, DSG0481D 115K, DSG0483D 70K, DSG0483D 90K, DSG0483D 115K, DSG0484D 70K, DSG0484D 90K, DSG0484D / DSG0487D 115K, DSG0601D 90K, DSG0601D 140K, DSG0603D 90K, DSG0603D 115K, DSG0603D 140K, DSG0604D 90K, DSG0604D 115K, and DSG0604D / DSG0607D 140K DOWNSHOT and HORIZONTAL Tables, T3 values are for heat mode only

DSG0723D / DSG0724D / DSG0727D 90K DOWNSHOT

SPEED TAP	EXTERNAL STATIC PRESSURE (ESP) IN W. C.	AIRFLOW (CFM)	RPM	WATTS	BHP
T1 ***	0.1	1335	615	199	0.20
	0.2	1290	655	209	0.21
	0.3	1230	695	220	0.23
	0.4	1165	740	233	0.24
	0.5	1095	785	246	0.26
	0.6	1035	830	258	0.27
	0.7	975	865	269	0.28
	0.8	900	910	281	0.30
T2 ***	0.1	1350	620	203	0.21
	0.2	1300	660	213	0.22
	0.3	1245	700	225	0.23
	0.4	1175	745	238	0.25
	0.5	1110	790	251	0.26
	0.6	1050	830	263	0.28
	0.7	990	870	274	0.29
	0.8	915	910	286	0.30
T3 ****	0.1	1660	720	324	0.34
	0.2	1605	750	336	0.36
	0.3	1555	785	348	0.37
	0.4	1505	820	362	0.39
	0.5	1450	855	376	0.41
	0.6	1400	895	390	0.43
	0.7	1345	925	403	0.44
	0.8	1290	965	417	0.46
T4	0.1	2145	880	606	0.66
	0.2	2090	905	621	0.68
	0.3	2050	925	636	0.70
	0.4	2015	950	650	0.71
	0.5	1975	975	666	0.73
	0.6	1935	1005	682	0.76
	0.7	1890	1030	698	0.77
	0.8	1850	1055	714	0.79
T5	0.1	2390	970	851	0.92
	0.2	2360	990	866	0.94
	0.3	2315	1015	884	0.97
	0.4	2270	1035	900	0.99
	0.5	2235	1060	916	1.01
	0.6	2200	1075	931	1.02
	0.7	2160	1100	947	1.05
	0.8	2115	1120	964	1.07

DSG0723D / DSG0724D / DSG0727D 90K HORIZONTAL

SPEED TAP	EXTERNAL STATIC PRESSURE (ESP) IN W. C.	AIRFLOW (CFM)	RPM	WATTS	BHP
T1 ***	0.1	1400	595	195	0.19
	0.2	1355	635	205	0.21
	0.3	1290	675	216	0.22
	0.4	1225	720	228	0.24
	0.5	1150	760	241	0.25
	0.6	1085	805	253	0.26
	0.7	1025	840	264	0.28
	0.8	945	885	275	0.29
T2 ***	0.1	1420	600	199	0.20
	0.2	1365	640	209	0.21
	0.3	1305	680	221	0.23
	0.4	1235	725	233	0.24
	0.5	1165	765	246	0.25
	0.6	1105	805	258	0.27
	0.7	1040	845	269	0.28
	0.8	960	885	280	0.29
T3 ****	0.1	1745	700	318	0.33
	0.2	1685	730	329	0.35
	0.3	1635	760	341	0.36
	0.4	1580	795	355	0.38
	0.5	1525	830	368	0.40
	0.6	1470	870	382	0.41
	0.7	1410	895	395	0.43
	0.8	1355	935	409	0.45
T4	0.1	2250	855	594	0.64
	0.2	2195	880	609	0.66
	0.3	2155	895	623	0.67
	0.4	2115	920	637	0.69
	0.5	2075	945	653	0.71
	0.6	2030	975	668	0.73
	0.7	1985	1000	684	0.75
	0.8	1945	1025	700	0.77
T5	0.1	2510	940	834	0.89
	0.2	2480	960	849	0.91
	0.3	2430	985	866	0.94
	0.4	2385	1005	882	0.96
	0.5	2345	1030	898	0.98
	0.6	2310	1045	912	0.99
	0.7	2270	1065	928	1.01
	0.8	2220	1085	945	1.03

*** IN DSG0723D / DSG0724D / DSG0727D 90K, 115K, & 140K DOWNSHOT & HORIZONTAL Tables, T1 and T2 values are for part load only
**** IN DSG0723D / DSG0724D / DSG0727D 90K, 115K, & 140K DOWNSHOT & HORIZONTAL Tables, T3 values are for high heat mode only

DSG0723D / DSG0724D / DSG0727D 115K DOWNSHOT

SPEED TAP	EXTERNAL STATIC PRESSURE (ESP) IN W. C.	AIRFLOW (CFM)	RPM	WATTS	BHP
T1 ***	0.1	1710	735	346	0.37
	0.2	1650	765	358	0.38
	0.3	1605	795	370	0.40
	0.4	1555	830	384	0.41
	0.5	1505	865	398	0.43
	0.6	1455	905	413	0.45
	0.7	1405	935	426	0.47
	0.8	1345	970	441	0.48
T2 ***	0.1	1350	620	203	0.21
	0.2	1300	660	213	0.22
	0.3	1245	700	225	0.23
	0.4	1175	745	238	0.25
	0.5	1110	790	251	0.26
	0.6	1050	830	263	0.28
	0.7	990	870	274	0.29
	0.8	915	910	286	0.30
T3 ****	0.1	2020	840	517	0.56
	0.2	1960	865	531	0.58
	0.3	1920	890	545	0.60
	0.4	1880	915	559	0.61
	0.5	1840	940	575	0.63
	0.6	1800	975	590	0.65
	0.7	-	-	-	-
	0.8	-	-	-	-
T4	0.1	2145	880	606	0.66
	0.2	2090	905	621	0.68
	0.3	2050	925	636	0.70
	0.4	2015	950	650	0.71
	0.5	1975	975	666	0.73
	0.6	1935	1005	682	0.76
	0.7	1890	1030	698	0.77
	0.8	1850	1055	714	0.79
T5	0.1	2390	970	851	0.92
	0.2	2360	990	866	0.94
	0.3	2315	1015	884	0.97
	0.4	2270	1035	900	0.99
	0.5	2235	1060	916	1.01
	0.6	2200	1075	931	1.02
	0.7	2160	1100	947	1.05
	0.8	2115	1120	964	1.07

DSG0723D / DSG0724D / DSG0727D 115K HORIZONTAL

SPEED TAP	EXTERNAL STATIC PRESSURE (ESP) IN W. C.	AIRFLOW (CFM)	RPM	WATTS	BHP
T1 ***	0.1	1795	715	339	0.36
	0.2	1735	740	351	0.37
	0.3	1685	770	363	0.38
	0.4	1635	805	376	0.40
	0.5	1580	840	390	0.42
	0.6	1530	880	405	0.44
	0.7	1475	905	417	0.45
	0.8	1410	940	432	0.47
T2 ***	0.1	1420	600	199	0.20
	0.2	1365	640	209	0.21
	0.3	1305	680	221	0.23
	0.4	1235	725	233	0.24
	0.5	1165	765	246	0.25
	0.6	1105	805	258	0.27
	0.7	1040	845	269	0.28
	0.8	960	885	280	0.29
T3 ****	0.1	2120	815	507	0.55
	0.2	2060	840	520	0.56
	0.3	2015	865	534	0.58
	0.4	1975	890	548	0.60
	0.5	1930	910	564	0.61
	0.6	1885	945	578	0.63
	0.7	1840	970	593	0.65
	0.8	1800	1000	610	0.67
T4	0.1	2250	855	594	0.64
	0.2	2195	880	609	0.66
	0.3	2155	895	623	0.67
	0.4	2115	920	637	0.69
	0.5	2075	945	653	0.71
	0.6	2030	975	668	0.73
	0.7	1985	1000	684	0.75
	0.8	1945	1025	700	0.77
T5	0.1	2510	940	834	0.89
	0.2	2480	960	849	0.91
	0.3	2430	985	866	0.94
	0.4	2385	1005	882	0.96
	0.5	2345	1030	898	0.98
	0.6	2310	1045	912	0.99
	0.7	2270	1065	928	1.01
	0.8	2220	1085	945	1.03

*** IN DSG0723D / DSG0724D / DSG0727D 90K, 115K, & 140K DOWNSHOT & HORIZONTAL Tables, T1 and T2 values are for part load only
**** IN DSG0723D / DSG0724D / DSG0727D 90K, 115K, & 140K DOWNSHOT & HORIZONTAL Tables, T3 values are for high heat mode only

DSG0723D / DSG0724D / DSG0727D 140K DOWNSHOT

SPEED TAP	EXTERNAL STATIC PRESSURE (ESP) IN W. C.	AIRFLOW (CFM)	RPM	WATTS	BHP
T1 ***	0.1	1660	745	316	0.34
	0.2	1625	770	327	0.36
	0.3	1555	800	339	0.37
	0.4	1515	835	348	0.39
	0.5	1480	860	360	0.40
	0.6	1425	895	374	0.41
	0.7	1370	930	386	0.43
	0.8	1320	955	397	0.44
T2 ***	0.1	1350	620	203	0.21
	0.2	1300	660	213	0.22
	0.3	1245	700	225	0.23
	0.4	1175	745	238	0.25
	0.5	1110	790	251	0.26
	0.6	1050	830	263	0.28
	0.7	990	870	274	0.29
	0.8	915	910	286	0.30
T3 ****	0.1	2180	905	598	0.66
	0.2	2150	925	609	0.68
	0.3	2095	950	627	0.70
	0.4	2060	975	642	0.71
	0.5	2040	995	650	0.73
	0.6	1990	1025	671	0.75
	0.7	1955	1045	683	0.77
	0.8	1915	1070	694	0.78
T4	0.1	2145	880	606	0.66
	0.2	2090	905	621	0.68
	0.3	2050	925	636	0.70
	0.4	2015	950	650	0.71
	0.5	1975	975	666	0.73
	0.6	1935	1005	682	0.76
	0.7	1890	1030	698	0.77
	0.8	1850	1055	714	0.79
T5	0.1	2390	970	851	0.92
	0.2	2360	990	866	0.94
	0.3	2315	1015	884	0.97
	0.4	2270	1035	900	0.99
	0.5	2235	1060	916	1.01
	0.6	2200	1075	931	1.02
	0.7	2160	1100	947	1.05
	0.8	2115	1120	964	1.07

DSG0723D / DSG0724D / DSG0727D 140K HORIZONTAL

SPEED TAP	EXTERNAL STATIC PRESSURE (ESP) IN W. C.	AIRFLOW (CFM)	RPM	WATTS	BHP
T1 ***	0.1	1745	725	310	0.33
	0.2	1705	745	320	0.34
	0.3	1635	775	332	0.36
	0.4	1590	810	341	0.37
	0.5	1555	835	353	0.39
	0.6	1495	870	367	0.40
	0.7	1440	900	378	0.42
	0.8	1385	925	389	0.43
T2 ***	0.1	1420	600	199	0.20
	0.2	1365	640	209	0.21
	0.3	1305	680	221	0.23
	0.4	1235	725	233	0.24
	0.5	1165	765	246	0.25
	0.6	1105	805	258	0.27
	0.7	1040	845	269	0.28
	0.8	960	885	280	0.29
T3 ****	0.1	2290	880	586	0.65
	0.2	2260	895	597	0.66
	0.3	2200	920	614	0.67
	0.4	2165	945	629	0.69
	0.5	2140	965	637	0.71
	0.6	2090	995	658	0.73
	0.7	2055	1015	669	0.74
	0.8	2010	1040	680	0.76
T4	0.1	2250	855	594	0.64
	0.2	2195	880	609	0.66
	0.3	2155	895	623	0.67
	0.4	2115	920	637	0.69
	0.5	2075	945	653	0.71
	0.6	2030	975	668	0.73
	0.7	1985	1000	684	0.75
	0.8	1945	1025	700	0.77
T5	0.1	2510	940	834	0.89
	0.2	2480	960	849	0.91
	0.3	2430	985	866	0.94
	0.4	2385	1005	882	0.96
	0.5	2345	1030	898	0.98
	0.6	2310	1045	912	0.99
	0.7	2270	1065	928	1.01
	0.8	2220	1085	945	1.03

*** IN DSG0723D / DSG0724D / DSG0727D 90K, 115K, & 140K DOWNSHOT & HORIZONTAL Tables, T1 and T2 values are for part load only
**** IN DSG0723D / DSG0724D / DSG0727D 90K, 115K, & 140K DOWNSHOT & HORIZONTAL Tables, T3 values are for high heat mode only

DSG0363W / DSG0364W 45K DOWNSHOT

SPEED TAP	EXTERNAL STATIC PRESSURE (ESP) IN W. C.	AIRFLOW (CFM)	RPM	WATTS	BHP
T1 *	0.8	790	875	240	0.26
	0.9	730	910	249	0.27
	1.0	675	945	259	0.28
	1.1	615	980	268	0.29
	1.2	555	1020	279	0.30
	1.3	515	1050	283	0.31
	1.4	475	1070	289	0.32
	1.5	485	1085	285	0.32
	1.6	440	1085	278	0.32
	1.7	345	1160	304	0.34
	1.8	325	1170	306	0.35
T2	0.8	1355	955	432	0.48
	0.9	1305	985	444	0.50
	1.0	1255	1015	458	0.51
	1.1	1200	1050	471	0.53
	1.2	1150	1080	484	0.54
	1.3	1100	1110	497	0.56
	1.4	1055	1135	509	0.57
	1.5	1020	1165	520	0.59
	1.6	970	1180	527	0.60
	1.7	915	1220	543	0.62
	1.8	-	-	-	-
T3 **	0.8	890	885	268	0.29
	0.9	830	920	278	0.30
	1.0	775	955	288	0.31
	1.1	715	990	299	0.33
	1.2	660	1030	309	0.34
	1.3	615	1060	315	0.35
	1.4	575	1080	323	0.35
	1.5	575	1100	321	0.36
	1.6	530	1100	317	0.36
	1.7	440	1170	341	0.38
	1.8	415	1180	344	0.39
T4	0.8	1485	975	491	0.55
	0.9	1440	1005	504	0.56
	1.0	1390	1035	518	0.58
	1.1	1340	1065	532	0.60
	1.2	1290	1095	546	0.62
	1.3	1240	1125	560	0.63
	1.4	1195	1155	573	0.65
	1.5	1150	1185	587	0.67
	1.6	1100	1205	597	0.68
	1.7	1050	1235	611	0.69
	1.8	1005	1260	623	0.71
T5	0.8	985	900	297	0.33
	0.9	930	930	307	0.34
	1.0	875	970	318	0.35
	1.1	815	1000	329	0.36
	1.2	760	1040	341	0.38
	1.3	715	1070	348	0.39
	1.4	675	1090	356	0.39
	1.5	665	1110	358	0.40
	1.6	-	-	-	-
	1.7	-	-	-	-
	1.8	-	-	-	-

DSG0363W / DSG0364W 45K DOWNSHOT

SPEED TAP	EXTERNAL STATIC PRESSURE (ESP) IN W. C.	AIRFLOW (CFM)	RPM	WATTS	BHP
T1' *	0.8	1115	915	340	0.37
	0.9	1060	950	351	0.39
	1.0	1005	985	363	0.40
	1.1	950	1015	375	0.42
	1.2	895	1050	387	0.43
	1.3	850	1085	397	0.44
	1.4	805	1105	406	0.45
	1.5	785	1130	411	0.46
	1.6	735	1140	413	0.47
	1.7	665	1195	432	0.49
	1.8	630	1210	439	0.50
T2'	0.8	-	-	-	-
	0.9	-	-	-	-
	1.0	1495	1050	570	0.64
	1.1	1450	1080	585	0.66
	1.2	1400	1110	599	0.68
	1.3	1350	1140	615	0.69
	1.4	1305	1165	628	0.71
	1.5	1255	1195	644	0.73
	1.6	1205	1220	656	0.74
	1.7	1160	1245	669	0.76
	1.8	1110	1275	682	0.78
T3' **	0.8	1115	915	340	0.37
	0.9	1060	950	351	0.39
	1.0	1005	985	363	0.40
	1.1	950	1015	375	0.42
	1.2	895	1050	387	0.43
	1.3	850	1085	397	0.44
	1.4	805	1105	406	0.45
	1.5	785	1130	411	0.46
	1.6	735	1140	413	0.47
	1.7	665	1195	432	0.49
	1.8	630	1210	439	0.50
T4'	0.8	1705	1015	607	0.68
	0.9	1665	1045	621	0.70
	1.0	1615	1075	635	0.72
	1.1	1570	1100	651	0.73
	1.2	1525	1125	665	0.75
	1.3	1475	1155	681	0.77
	1.4	1430	1185	696	0.79
	1.5	1375	1215	713	0.81
	1.6	1325	1240	727	0.83
	1.7	1290	1260	740	0.84
	1.8	1235	1290	754	0.86
T5'	0.8	1240	935	385	0.43
	0.9	1190	965	397	0.44
	1.0	1135	1000	409	0.46
	1.1	1080	1030	422	0.47
	1.2	1025	1065	435	0.49
	1.3	980	1095	446	0.50
	1.4	935	1120	457	0.51
	1.5	905	1145	465	0.52
	1.6	855	1165	470	0.53
	1.7	795	1205	487	0.55
	1.8	750	1225	495	0.56

* In DSG0363W / DSG0364W 45K, DSG0363W / DSG0364W 70K, DSG0363W / DSG0364W / DSG0367W 90K, DSG0483W / DSG0484W 70K, DSG0483W / DSG0484W 90K, DSG0483W / DSG0484W / DSG0487W 115K, DSG0603W / DSG0604W 90K, DSG0603W / DSG0604W 115K, AND DSG0603W / DSG0604W / DSG0607W 140K DOWNSHOT & HORIZONTAL Tables, T1 and T1' values are for fan mode only

** In DSG0363W / DSG0364W 45K, DSG0363W / DSG0364W 70K, DSG0363W / DSG0364W / DSG0367W 90K, DSG0483W / DSG0484W 70K, DSG0483W / DSG0484W 90K, DSG0483W / DSG0484W / DSG0487W 115K, DSG0603W / DSG0604W 90K, DSG0603W / DSG0604W 115K, AND DSG0603W / DSG0604W / DSG0607W 140K DOWNSHOT & HORIZONTAL Tables, T3 and T3' values are for heat mode only

DSG0363W / DSG0364W 45K HORIZONTAL

SPEED TAP	EXTERNAL STATIC PRESSURE (ESP) IN W. C.	AIRFLOW (CFM)	RPM	WATTS	BHP
T1 *	0.8	810	845	233	0.25
	0.9	750	880	242	0.26
	1.0	690	910	251	0.27
	1.1	630	945	260	0.28
	1.2	570	985	271	0.29
	1.3	530	1015	275	0.30
	1.4	485	1035	280	0.31
	1.5	495	1045	276	0.31
	1.6	450	1045	270	0.31
	1.7	355	1120	295	0.33
	1.8	335	1130	297	0.33
T2	0.8	1390	920	419	0.46
	0.9	1340	950	431	0.48
	1.0	1285	980	444	0.49
	1.1	1230	1015	457	0.51
	1.2	1180	1040	469	0.52
	1.3	1130	1070	482	0.54
	1.4	1080	1095	494	0.55
	1.5	1045	1125	504	0.57
	1.6	995	1140	511	0.58
	1.7	940	1175	527	0.59
	1.8	900	1200	535	0.61
T3 **	0.8	910	855	260	0.28
	0.9	850	890	270	0.29
	1.0	795	920	279	0.30
	1.1	735	955	290	0.31
	1.2	675	995	300	0.33
	1.3	630	1025	306	0.34
	1.4	590	1040	313	0.34
	1.5	590	1060	311	0.35
	1.6	545	1060	307	0.35
	1.7	450	1130	331	0.37
	1.8	425	1140	334	0.37
T4	0.8	1500	940	476	0.53
	0.9	1475	970	489	0.54
	1.0	1425	1000	502	0.56
	1.1	1375	1030	516	0.58
	1.2	1320	1055	530	0.59
	1.3	1270	1085	543	0.61
	1.4	1225	1115	556	0.63
	1.5	1180	1145	569	0.64
	1.6	1130	1165	579	0.65
	1.7	1075	1190	593	0.67
	1.8	1030	1215	604	0.68
T5	0.8	1010	870	288	0.31
	0.9	955	895	298	0.32
	1.0	895	935	308	0.34
	1.1	835	965	319	0.35
	1.2	780	1005	331	0.36
	1.3	735	1035	338	0.37
	1.4	690	1050	345	0.38
	1.5	680	1070	347	0.39
	1.6	630	1080	345	0.39
	1.7	-	-	-	-
	1.8	-	-	-	-

DSG0363W / DSG0364W 45K HORIZONTAL

SPEED TAP	EXTERNAL STATIC PRESSURE (ESP) IN W. C.	AIRFLOW (CFM)	RPM	WATTS	BHP
T1' *	0.8	1145	885	330	0.36
	0.9	1085	915	340	0.37
	1.0	1030	950	352	0.39
	1.1	975	980	364	0.40
	1.2	915	1015	375	0.42
	1.3	870	1045	385	0.43
	1.4	825	1065	394	0.44
	1.5	805	1090	399	0.45
	1.6	755	1100	401	0.45
	1.7	680	1155	419	0.47
	1.8	645	1170	426	0.48
T2'	0.8	-	-	-	-
	0.9	-	-	-	-
	1.0	-	-	-	-
	1.1	1485	1040	567	0.63
	1.2	1435	1070	581	0.65
	1.3	1385	1100	597	0.67
	1.4	1340	1125	609	0.69
	1.5	1285	1155	625	0.70
	1.6	1235	1175	636	0.72
	1.7	1190	1200	649	0.73
	1.8	1140	1230	662	0.75
T3' **	0.8	1145	885	330	0.36
	0.9	1085	915	340	0.37
	1.0	1030	950	352	0.39
	1.1	975	980	364	0.40
	1.2	915	1015	375	0.42
	1.3	870	1045	385	0.43
	1.4	825	1065	394	0.44
	1.5	805	1090	399	0.45
	1.6	755	1100	401	0.45
	1.7	680	1155	419	0.47
	1.8	645	1170	426	0.48
T4'	0.8	1750	980	589	0.65
	0.9	1705	1010	602	0.67
	1.0	1655	1035	616	0.69
	1.1	1610	1060	631	0.71
	1.2	1565	1085	645	0.72
	1.3	1510	1115	661	0.74
	1.4	1465	1145	675	0.76
	1.5	1410	1170	692	0.78
	1.6	1360	1195	705	0.80
	1.7	1320	1215	718	0.81
	1.8	1265	1245	731	0.83
T5'	0.8	1270	900	373	0.41
	0.9	1220	930	385	0.42
	1.0	1165	965	397	0.44
	1.1	1105	995	409	0.45
	1.2	1050	1030	422	0.47
	1.3	1005	1055	433	0.48
	1.4	960	1080	443	0.49
	1.5	930	1105	451	0.50
	1.6	875	1125	456	0.51
	1.7	815	1165	472	0.53
	1.8	770	1180	480	0.54

* In DSG0363W / DSG0364W 45K, DSG0363W / DSG0364W 70K, DSG0363W / DSG0364W / DSG0367W ~~90K, DSG0483W / DSG0484W 70K, DSG0483W / DSG0484W 90K, DSG0483W / DSG0484W /~~ DSG0487W 115K, DSG0603W / DSG0604W 90K, DSG0603W / DSG0604W 115K, AND DSG0603W / DSG0604W / DSG0607W 140K DOWNSHOT & HORIZONTAL Tables, T1 and T1' values are for fan mode only

** In DSG0363W / DSG0364W 45K, DSG0363W / DSG0364W 70K, DSG0363W / DSG0364W / DSG0367W 90K, DSG0483W / DSG0484W 70K, DSG0483W / DSG0484W 90K, DSG0483W / DSG0484W / DSG0487W 115K, DSG0603W / DSG0604W 90K, DSG0603W / DSG0604W 115K, AND DSG0603W / DSG0604W / DSG0607W 140K DOWNSHOT & HORIZONTAL Tables, T3 and T3' values are for heat mode only

DSG0363W / DSG0364W 70K DOWNSHOT

SPEED TAP	EXTERNAL STATIC PRESSURE (ESP) IN W. C.	AIRFLOW (CFM)	RPM	WATTS	BHP
T1 *	0.8	820	880	248	0.27
	0.9	760	910	257	0.28
	1.0	705	950	267	0.29
	1.1	640	980	277	0.30
	1.2	585	1025	287	0.31
	1.3	545	1055	292	0.32
	1.4	505	1075	299	0.33
	1.5	510	1090	295	0.33
	1.6	465	1090	289	0.33
	1.7	375	1160	315	0.35
	1.8	350	1175	317	0.36
T2	0.8	1355	955	432	0.48
	0.9	1305	985	444	0.50
	1.0	1255	1015	458	0.51
	1.1	1200	1050	471	0.53
	1.2	1150	1080	484	0.54
	1.3	1100	1110	497	0.56
	1.4	1055	1135	509	0.57
	1.5	1020	1165	520	0.59
	1.6	970	1180	527	0.60
	1.7	915	1220	543	0.62
	1.8	-	-	-	-
T3 **	0.8	1190	925	367	0.41
	0.9	1140	960	378	0.42
	1.0	1085	995	391	0.44
	1.1	1025	1025	403	0.45
	1.2	975	1060	415	0.46
	1.3	925	1090	426	0.48
	1.4	885	1115	436	0.49
	1.5	855	1140	443	0.50
	1.6	805	1155	447	0.51
	1.7	745	1200	465	0.53
	1.8	705	1220	472	0.53
T4	0.8	1485	975	491	0.55
	0.9	1440	1005	504	0.56
	1.0	1390	1035	518	0.58
	1.1	1340	1065	532	0.60
	1.2	1290	1095	546	0.62
	1.3	1240	1125	560	0.63
	1.4	1195	1155	573	0.65
	1.5	1150	1185	587	0.67
	1.6	1100	1205	597	0.68
	1.7	1050	1235	611	0.69
	1.8	1005	1260	623	0.71
T5	0.8	1310	945	413	0.46
	0.9	1260	975	425	0.47
	1.0	1205	1010	438	0.49
	1.1	1150	1040	452	0.50
	1.2	1100	1075	464	0.52
	1.3	1050	1105	477	0.54
	1.4	1010	1130	488	0.55
	1.5	975	1155	498	0.56
	1.6	925	1175	504	0.57
	1.7	-	-	-	-
	1.8	-	-	-	-

DSG0363W / DSG0364W 70K DOWNSHOT

SPEED TAP	EXTERNAL STATIC PRESSURE (ESP) IN W. C.	AIRFLOW (CFM)	RPM	WATTS	BHP
T1' *	0.8	1150	920	353	0.39
	0.9	1100	955	364	0.40
	1.0	1045	990	377	0.42
	1.1	990	1020	389	0.43
	1.2	935	1055	401	0.45
	1.3	890	1085	411	0.46
	1.4	845	1110	421	0.47
	1.5	820	1135	427	0.48
	1.6	770	1150	430	0.49
	1.7	705	1195	448	0.51
	1.8	670	1215	455	0.51
T2'	0.8	-	-	-	-
	0.9	-	-	-	-
	1.0	1495	1050	570	0.64
	1.1	1450	1080	585	0.66
	1.2	1400	1110	599	0.68
	1.3	1350	1140	615	0.69
	1.4	1305	1165	628	0.71
	1.5	1255	1195	644	0.73
	1.6	1205	1220	656	0.74
	1.7	1160	1245	669	0.76
	1.8	1110	1275	682	0.78
T3' **	0.8	1420	965	461	0.51
	0.9	1375	995	474	0.53
	1.0	1325	1025	488	0.55
	1.1	1270	1055	502	0.56
	1.2	1220	1085	515	0.58
	1.3	1170	1120	529	0.60
	1.4	1130	1145	541	0.61
	1.5	1085	1175	554	0.63
	1.6	1035	1195	562	0.64
	1.7	985	1225	577	0.65
	1.8	935	1250	587	0.67
T4'	0.8	1705	1015	607	0.68
	0.9	1665	1045	621	0.70
	1.0	1615	1075	635	0.72
	1.1	1570	1100	651	0.73
	1.2	1525	1125	665	0.75
	1.3	1475	1155	681	0.77
	1.4	1430	1185	696	0.79
	1.5	1375	1215	713	0.81
	1.6	1325	1240	727	0.83
	1.7	1290	1260	740	0.84
	1.8	1235	1290	754	0.86
T5'	0.8	-	-	-	-
	0.9	1500	1015	535	0.60
	1.0	1455	1045	549	0.62
	1.1	1405	1075	564	0.63
	1.2	1355	1105	577	0.65
	1.3	1305	1135	593	0.67
	1.4	1265	1160	606	0.68
	1.5	1215	1190	621	0.70
	1.6	1165	1215	632	0.72
	1.7	1120	1240	646	0.73
	1.8	1070	1270	658	0.75

* In DSG0363W / DSG0364W 45K, DSG0363W / DSG0364W 70K, DSG0363W / DSG0364W / DSG0367W 90K, DSG0483W / DSG0484W 70K, DSG0483W / DSG0484W 90K, DSG0483W / DSG0484W / DSG0487W 115K, DSG0603W / DSG0604W 90K, DSG0603W / DSG0604W 115K, AND DSG0603W / DSG0604W / DSG0607W 140K DOWNSHOT & HORIZONTAL Tables, T1 and T1' values are for fan mode only

** In DSG0363W / DSG0364W 45K, DSG0363W / DSG0364W 70K, DSG0363W / DSG0364W / DSG0367W 90K, DSG0483W / DSG0484W 70K, DSG0483W / DSG0484W 90K, DSG0483W / DSG0484W / DSG0487W 115K, DSG0603W / DSG0604W 90K, DSG0603W / DSG0604W 115K, AND DSG0603W / DSG0604W / DSG0607W 140K DOWNSHOT & HORIZONTAL Tables, T3 and T3' values are for heat mode only

DSG0363W / DSG0364W 70K HORIZONTAL

SPEED TAP	EXTERNAL STATIC PRESSURE (ESP) IN W. C.	AIRFLOW (CFM)	RPM	WATTS	BHP
T1 *	0.8	840	850	241	0.26
	0.9	780	880	249	0.27
	1.0	725	915	259	0.28
	1.1	655	945	269	0.29
	1.2	600	990	278	0.30
	1.3	560	1020	283	0.31
	1.4	520	1035	290	0.32
	1.5	525	1050	286	0.32
	1.6	475	1050	280	0.32
	1.7	385	1120	306	0.34
	1.8	360	1135	307	0.35
T2	0.8	1390	920	419	0.46
	0.9	1340	950	431	0.48
	1.0	1285	980	444	0.49
	1.1	1230	1015	457	0.51
	1.2	1180	1040	469	0.52
	1.3	1130	1070	482	0.54
	1.4	1080	1095	494	0.55
	1.5	1045	1125	504	0.57
	1.6	995	1140	511	0.58
	1.7	940	1175	527	0.59
	1.8	900	1200	535	0.61
T3 **	0.8	1220	895	356	0.39
	0.9	1170	925	367	0.41
	1.0	1110	960	379	0.42
	1.1	1050	990	391	0.43
	1.2	1000	1025	403	0.45
	1.3	950	1050	413	0.46
	1.4	905	1075	423	0.47
	1.5	875	1100	430	0.48
	1.6	825	1115	434	0.49
	1.7	765	1160	451	0.51
	1.8	725	1175	458	0.51
T4	0.8	-	-	-	-
	0.9	1475	970	489	0.54
	1.0	1425	1000	502	0.56
	1.1	1375	1030	516	0.58
	1.2	1320	1055	530	0.59
	1.3	1270	1085	543	0.61
	1.4	1225	1115	556	0.63
	1.5	1180	1145	569	0.64
	1.6	1130	1165	579	0.65
	1.7	1075	1190	593	0.67
	1.8	1030	1215	604	0.68
T5	0.8	1345	910	401	0.44
	0.9	1290	940	412	0.46
	1.0	1235	975	425	0.47
	1.1	1180	1005	438	0.49
	1.2	1130	1035	450	0.50
	1.3	1075	1065	463	0.52
	1.4	1035	1090	473	0.53
	1.5	1000	1115	483	0.54
	1.6	950	1135	489	0.55
	1.7	900	1170	504	0.57
	1.8	-	-	-	-

DSG0363W / DSG0364W 70K HORIZONTAL

SPEED TAP	EXTERNAL STATIC PRESSURE (ESP) IN W. C.	AIRFLOW (CFM)	RPM	WATTS	BHP
T1' *	0.8	1180	890	342	0.38
	0.9	1130	920	353	0.39
	1.0	1070	955	366	0.40
	1.1	1015	985	377	0.42
	1.2	960	1020	389	0.43
	1.3	910	1045	399	0.44
	1.4	865	1070	408	0.45
	1.5	840	1095	414	0.46
	1.6	790	1110	417	0.47
	1.7	725	1155	435	0.49
	1.8	685	1170	441	0.50
T2'	0.8	-	-	-	-
	0.9	-	-	-	-
	1.0	-	-	-	-
	1.1	1485	1040	567	0.63
	1.2	1435	1070	581	0.65
	1.3	1385	1100	597	0.67
	1.4	1340	1125	609	0.69
	1.5	1285	1155	625	0.70
	1.6	1235	1175	636	0.72
	1.7	1190	1200	649	0.73
	1.8	1140	1230	662	0.75
T3' **	0.8	1455	930	447	0.50
	0.9	1410	960	460	0.51
	1.0	1360	990	473	0.53
	1.1	1300	1020	487	0.54
	1.2	1250	1045	500	0.56
	1.3	1200	1080	513	0.58
	1.4	1160	1105	525	0.59
	1.5	1110	1135	537	0.61
	1.6	1060	1155	545	0.62
	1.7	1010	1180	560	0.63
	1.8	960	1205	569	0.64
T4'	0.8	1750	980	589	0.65
	0.9	1705	1010	602	0.67
	1.0	1655	1035	616	0.69
	1.1	1610	1060	631	0.71
	1.2	1565	1085	645	0.72
	1.3	1510	1115	661	0.74
	1.4	1465	1145	675	0.76
	1.5	1410	1170	692	0.78
	1.6	1360	1195	705	0.80
	1.7	1320	1215	718	0.81
	1.8	1265	1245	731	0.83
T5'	0.8	1590	950	505	0.56
	0.9	1545	980	519	0.58
	1.0	1490	1010	533	0.60
	1.1	1440	1035	547	0.61
	1.2	1390	1065	560	0.63
	1.3	1340	1095	575	0.65
	1.4	1295	1120	588	0.66
	1.5	1245	1150	602	0.68
	1.6	1195	1170	613	0.69
	1.7	1150	1195	627	0.71
	1.8	1095	1225	638	0.72

* In DSG0363W / DSG0364W 45K, DSG0363W / DSG0364W 70K, DSG0363W / DSG0364W / DSG0367W 90K, DSG0483W / DSG0484W 70K, DSG0483W / DSG0484W 90K, DSG0483W / DSG0484W / DSG0487W 115K, DSG0603W / DSG0604W 90K, DSG0603W / DSG0604W 115K, AND DSG0603W / DSG0604W / DSG0607W 140K DOWNSHOT & HORIZONTAL Tables, T1 and T1' values are for fan mode only

** In DSG0363W / DSG0364W 45K, DSG0363W / DSG0364W 70K, DSG0363W / DSG0364W / DSG0367W 90K, DSG0483W / DSG0484W 70K, DSG0483W / DSG0484W 90K, DSG0483W / DSG0484W / DSG0487W 115K, DSG0603W / DSG0604W 90K, DSG0603W / DSG0604W 115K, AND DSG0603W / DSG0604W / DSG0607W 140K DOWNSHOT & HORIZONTAL Tables, T3 and T3' values are for heat mode only

DSG0363W / DSG0364W / DSG0367W 90K DOWNSHOT

SPEED TAP	EXTERNAL STATIC PRESSURE (ESP) IN W. C.	AIRFLOW (CFM)	RPM	WATTS	BHP
T1 *	0.8	985	900	297	0.33
	0.9	930	930	307	0.34
	1.0	875	970	318	0.35
	1.1	815	1000	329	0.36
	1.2	760	1040	341	0.38
	1.3	715	1070	348	0.39
	1.4	675	1090	356	0.39
	1.5	665	1110	358	0.40
	1.6	615	1120	356	0.41
	1.7	535	1180	378	0.43
	1.8	505	1195	383	0.43
T2	0.8	1355	955	432	0.48
	0.9	1305	985	444	0.50
	1.0	1255	1015	458	0.51
	1.1	1200	1050	471	0.53
	1.2	1150	1080	484	0.54
	1.3	1100	1110	497	0.56
	1.4	1055	1135	509	0.57
	1.5	1020	1165	520	0.59
	1.6	970	1180	527	0.60
	1.7	915	1220	543	0.62
	1.8	-	-	-	-
T3 **	0.8	1540	985	516	0.58
	0.9	1495	1015	530	0.59
	1.0	1445	1045	544	0.61
	1.1	1395	1075	559	0.63
	1.2	1345	1100	572	0.64
	1.3	1295	1135	587	0.66
	1.4	1250	1160	601	0.68
	1.5	1205	1190	616	0.70
	1.6	1155	1215	626	0.71
	1.7	1110	1240	640	0.73
	1.8	1060	1265	652	0.74
T4	0.8	1485	975	491	0.55
	0.9	1440	1005	504	0.56
	1.0	1390	1035	518	0.58
	1.1	1340	1065	532	0.60
	1.2	1290	1095	546	0.62
	1.3	1240	1125	560	0.63
	1.4	1195	1155	573	0.65
	1.5	1150	1185	587	0.67
	1.6	1100	1205	597	0.68
	1.7	1050	1235	611	0.69
	1.8	1005	1260	623	0.71
T5	0.8	1665	1010	585	0.65
	0.9	1625	1035	599	0.67
	1.0	1575	1065	613	0.69
	1.1	1530	1095	628	0.71
	1.2	1485	1120	643	0.73
	1.3	1435	1150	659	0.74
	1.4	1390	1175	673	0.76
	1.5	1340	1210	690	0.78
	1.6	1285	1235	703	0.80
	1.7	1245	1255	716	0.81
	1.8	1195	1285	730	0.83

DSG0363W / DSG0364W / DSG0367W 90K DOWNSHOT

SPEED TAP	EXTERNAL STATIC PRESSURE (ESP) IN W. C.	AIRFLOW (CFM)	RPM	WATTS	BHP
T1' *	0.8	1310	945	413	0.46
	0.9	1260	975	425	0.47
	1.0	1205	1010	438	0.49
	1.1	1150	1040	452	0.50
	1.2	1100	1075	464	0.52
	1.3	1050	1105	477	0.54
	1.4	1010	1130	488	0.55
	1.5	975	1155	498	0.56
	1.6	925	1175	504	0.57
	1.7	-	-	-	-
	1.8	-	-	-	-
T2'	0.8	-	-	-	-
	0.9	-	-	-	-
	1.0	1495	1050	570	0.64
	1.1	1450	1080	585	0.66
	1.2	1400	1110	599	0.68
	1.3	1350	1140	615	0.69
	1.4	1305	1165	628	0.71
	1.5	1255	1195	644	0.73
	1.6	1205	1220	656	0.74
	1.7	1160	1245	669	0.76
	1.8	1110	1275	682	0.78
T3' **	0.8	1740	1025	629	0.70
	0.9	1700	1050	643	0.72
	1.0	1655	1080	657	0.74
	1.1	1610	1105	673	0.76
	1.2	1560	1130	687	0.77
	1.3	1515	1160	704	0.80
	1.4	1470	1190	719	0.82
	1.5	1415	1220	737	0.84
	1.6	1365	1245	751	0.85
	1.7	1330	1265	764	0.87
	1.8	1275	1295	779	0.89
T4'	0.8	-	-	-	-
	0.9	-	-	-	-
	1.0	1615	1075	635	0.72
	1.1	1570	1100	651	0.73
	1.2	1525	1125	665	0.75
	1.3	1475	1155	681	0.77
	1.4	1430	1185	696	0.79
	1.5	1375	1215	713	0.81
	1.6	1325	1240	727	0.83
	1.7	1290	1260	740	0.84
	1.8	1235	1290	754	0.86
T5'	0.8	1875	1055	720	0.80
	0.9	1835	1080	735	0.82
	1.0	1795	1105	749	0.84
	1.1	1755	1130	765	0.86
	1.2	1710	1155	780	0.88
	1.3	1660	1185	797	0.90
	1.4	1620	1210	813	0.92
	1.5	1565	1240	831	0.94
	1.6	1520	1265	848	0.96
	1.7	1485	1285	861	0.98
	1.8	1430	1315	878	1.00

* In DSG0363W / DSG0364W 45K, DSG0363W / DSG0364W 70K, DSG0363W / DSG0364W / DSG0367W 90K, DSG0483W / DSG0484W 70K, DSG0483W / DSG0484W 90K, DSG0483W / DSG0484W / DSG0487W 115K, DSG0603W / DSG0604W 90K, DSG0603W / DSG0604W 115K, AND DSG0603W / DSG0604W / DSG0607W 140K DOWNSHOT & HORIZONTAL Tables, T1 and T1' values are for fan mode only

** In DSG0363W / DSG0364W 45K, DSG0363W / DSG0364W 70K, DSG0363W / DSG0364W / DSG0367W 90K, DSG0483W / DSG0484W 70K, DSG0483W / DSG0484W 90K, DSG0483W / DSG0484W / DSG0487W 115K, DSG0603W / DSG0604W 90K, DSG0603W / DSG0604W 115K, AND DSG0603W / DSG0604W / DSG0607W 140K DOWNSHOT & HORIZONTAL Tables, T3 and T3' values are for heat mode only

DSG0363W / DSG0364W / DSG0367W 90K HORIZONTAL

SPEED TAP	EXTERNAL STATIC PRESSURE (ESP) IN W. C.	AIRFLOW (CFM)	RPM	WATTS	BHP
T1 *	0.8	1010	870	288	0.31
	0.9	955	895	298	0.32
	1.0	895	935	308	0.34
	1.1	835	965	319	0.35
	1.2	780	1005	331	0.36
	1.3	735	1035	338	0.37
	1.4	690	1050	345	0.38
	1.5	680	1070	347	0.39
	1.6	630	1080	345	0.39
	1.7	550	1140	367	0.41
	1.8	520	1155	372	0.42
T2	0.8	1390	920	419	0.46
	0.9	1340	950	431	0.48
	1.0	1285	980	444	0.49
	1.1	1230	1015	457	0.51
	1.2	1180	1040	469	0.52
	1.3	1130	1070	482	0.54
	1.4	1080	1095	494	0.55
	1.5	1045	1125	504	0.57
	1.6	995	1140	511	0.58
	1.7	940	1175	527	0.59
	1.8	890	1200	535	0.61
T3 **	0.8	1580	950	501	0.56
	0.9	1530	980	514	0.57
	1.0	1480	1010	528	0.59
	1.1	1430	1035	542	0.61
	1.2	1380	1060	555	0.62
	1.3	1325	1095	569	0.64
	1.4	1280	1120	583	0.66
	1.5	1235	1150	598	0.67
	1.6	1185	1170	607	0.69
	1.7	1140	1195	621	0.70
	1.8	1085	1220	632	0.71
T4	0.8	-	-	-	-
	0.9	1475	970	489	0.54
	1.0	1425	1000	502	0.56
	1.1	1375	1030	516	0.58
	1.2	1320	1055	530	0.59
	1.3	1270	1085	543	0.61
	1.4	1225	1115	556	0.63
	1.5	1180	1145	569	0.64
	1.6	1130	1165	579	0.65
	1.7	1075	1190	593	0.67
	1.8	1030	1215	604	0.68
T5	0.8	1705	975	567	0.63
	0.9	1665	1000	581	0.65
	1.0	1615	1030	595	0.67
	1.1	1570	1055	609	0.68
	1.2	1520	1080	624	0.70
	1.3	1470	1110	639	0.72
	1.4	1425	1135	653	0.73
	1.5	1375	1170	669	0.76
	1.6	1315	1190	682	0.77
	1.7	1275	1210	695	0.78
	1.8	1225	1240	708	0.80

DSG0363W / DSG0364W / DSG0367W 90K HORIZONTAL

SPEED TAP	EXTERNAL STATIC PRESSURE (ESP) IN W. C.	AIRFLOW (CFM)	RPM	WATTS	BHP
T1' *	0.8	1345	910	401	0.44
	0.9	1290	940	412	0.46
	1.0	1235	975	425	0.47
	1.1	1180	1005	438	0.49
	1.2	1130	1035	450	0.50
	1.3	1075	1065	463	0.52
	1.4	1035	1090	473	0.53
	1.5	1000	1115	483	0.54
	1.6	950	1135	489	0.55
	1.7	885	1170	504	0.57
	1.8	840	1190	513	0.58
T2'	0.8	-	-	-	-
	0.9	-	-	-	-
	1.0	-	-	-	-
	1.1	1485	1040	567	0.63
	1.2	1435	1070	581	0.65
	1.3	1385	1100	597	0.67
	1.4	1340	1125	609	0.69
	1.5	1285	1155	625	0.70
	1.6	1235	1175	636	0.72
	1.7	1190	1200	649	0.73
	1.8	1140	1230	662	0.75
T3' **	0.8	1785	990	610	0.68
	0.9	1740	1015	624	0.70
	1.0	1695	1040	637	0.71
	1.1	1650	1065	653	0.73
	1.2	1600	1090	666	0.75
	1.3	1555	1120	683	0.77
	1.4	1505	1150	697	0.79
	1.5	1450	1175	715	0.81
	1.6	1400	1200	728	0.82
	1.7	1365	1220	741	0.84
	1.8	1305	1250	756	0.86
T4'	0.8	-	-	-	-
	0.9	-	-	-	-
	1.0	1655	1035	616	0.69
	1.1	1610	1060	631	0.71
	1.2	1565	1085	645	0.72
	1.3	1510	1115	661	0.74
	1.4	1465	1145	675	0.76
	1.5	1410	1170	692	0.78
	1.6	1360	1195	705	0.80
	1.7	1320	1215	718	0.81
	1.8	1265	1245	731	0.83
T5'	0.8	1920	1020	698	0.78
	0.9	1880	1040	713	0.79
	1.0	1840	1065	727	0.81
	1.1	1800	1090	742	0.83
	1.2	1755	1115	757	0.85
	1.3	1700	1145	773	0.87
	1.4	1660	1170	789	0.89
	1.5	1605	1195	806	0.91
	1.6	1560	1220	823	0.93
	1.7	1520	1240	835	0.94
	1.8	1465	1270	852	0.97

* In DSG0363W / DSG0364W 45K, DSG0363W / DSG0364W 70K, DSG0363W / DSG0364W / DSG0367W 90K, DSG0483W / DSG0484W 70K, DSG0483W / DSG0484W 90K, DSG0483W / DSG0484W / DSG0487W 115K, DSG0603W / DSG0604W 90K, DSG0603W / DSG0604W 115K, AND DSG0603W / DSG0604W / DSG0607W 140K DOWNSHOT & HORIZONTAL Tables, T1 and T1' values are for fan mode only

** In DSG0363W / DSG0364W 45K, DSG0363W / DSG0364W 70K, DSG0363W / DSG0364W / DSG0367W 90K, DSG0483W / DSG0484W 70K, DSG0483W / DSG0484W 90K, DSG0483W / DSG0484W / DSG0487W 115K, DSG0603W / DSG0604W 90K, DSG0603W / DSG0604W 115K, AND DSG0603W / DSG0604W / DSG0607W 140K DOWNSHOT & HORIZONTAL Tables, T3 and T3' values are for heat mode only

DSG0483W / DSG0484W 70K DOWNSHOT

SPEED TAP	EXTERNAL STATIC PRESSURE (ESP) IN W. C.	AIRFLOW (CFM)	RPM	WATTS	BHP
T1 *	0.8	810	890	253	0.27
	0.9	740	925	262	0.28
	1.0	625	965	271	0.29
	1.1	740	985	278	0.30
	1.2	700	1030	287	0.31
	1.3	715	1060	293	0.32
	1.4	650	1080	302	0.33
	1.5	-	-	-	-
	1.6	-	-	-	-
	1.7	-	-	-	-
	1.8	-	-	-	-
T2	0.8	1770	1070	706	0.79
	0.9	1730	1100	726	0.82
	1.0	1690	1130	742	0.84
	1.1	1640	1150	753	0.85
	1.2	1590	1180	774	0.88
	1.3	1540	1205	791	0.89
	1.4	1500	1230	798	0.91
	1.5	1465	1255	819	0.93
	1.6	1425	1275	833	0.95
	1.7	1395	1300	839	0.97
	1.8	1350	1335	861	0.99
T3 **	0.8	1125	945	364	0.40
	0.9	1065	975	378	0.42
	1.0	980	1015	390	0.43
	1.1	1015	1035	398	0.44
	1.2	970	1075	412	0.46
	1.3	955	1105	421	0.47
	1.4	910	1125	429	0.48
	1.5	820	1160	442	0.50
	1.6	775	1185	451	0.51
	1.7	720	1190	454	0.51
	1.8	695	1215	466	0.52
T4	0.8	1895	1100	802	0.90
	0.9	1855	1130	822	0.93
	1.0	1820	1155	839	0.95
	1.1	1775	1175	850	0.96
	1.2	1725	1205	871	0.99
	1.3	1675	1230	889	1.01
	1.4	1635	1250	898	1.02
	1.5	1595	1275	921	1.04
	1.6	1560	1300	937	1.06
	1.7	1525	1320	944	1.08
	1.8	1480	1355	967	1.11
T5	0.8	1280	970	430	0.48
	0.9	1225	1005	445	0.50
	1.0	1155	1040	458	0.51
	1.1	1155	1060	467	0.52
	1.2	1110	1100	484	0.54
	1.3	1085	1130	495	0.56
	1.4	1040	1145	501	0.57
	1.5	970	1180	516	0.58
	1.6	930	1205	526	0.60
	1.7	-	-	-	-
	1.8	-	-	-	-

DSG0483W / DSG0484W 70K DOWNSHOT

SPEED TAP	EXTERNAL STATIC PRESSURE (ESP) IN W. C.	AIRFLOW (CFM)	RPM	WATTS	BHP
T1' *	0.8	1125	945	364	0.40
	0.9	1065	975	378	0.42
	1.0	980	1015	390	0.43
	1.1	1015	1035	398	0.44
	1.2	970	1075	412	0.46
	1.3	955	1105	421	0.47
	1.4	910	1125	429	0.48
	1.5	820	1160	442	0.50
	1.6	775	1185	451	0.51
	1.7	720	1190	454	0.51
	1.8	695	1215	466	0.52
T2'	0.8	1950	1115	851	0.96
	0.9	1915	1145	872	0.98
	1.0	1880	1165	889	1.00
	1.1	1835	1185	900	1.02
	1.2	1790	1215	921	1.04
	1.3	1745	1240	940	1.06
	1.4	1695	1265	949	1.08
	1.5	1660	1290	974	1.11
	1.6	1620	1310	990	1.12
	1.7	1590	1330	997	1.14
	1.8	1545	1365	1021	1.17
T3' **	0.8	1375	990	474	0.53
	0.9	1325	1020	490	0.55
	1.0	1260	1055	504	0.57
	1.1	1245	1080	513	0.58
	1.2	1195	1115	531	0.60
	1.3	1165	1140	543	0.61
	1.4	1125	1160	550	0.62
	1.5	1060	1190	566	0.64
	1.6	1025	1215	575	0.65
	1.7	-	-	-	-
	1.8	-	-	-	-
T4'	0.8	2000	1130	902	1.01
	0.9	1970	1160	923	1.04
	1.0	1935	1180	940	1.06
	1.1	1900	1195	951	1.07
	1.2	1855	1225	972	1.10
	1.3	1810	1250	991	1.12
	1.4	1760	1275	1002	1.14
	1.5	1720	1300	1028	1.16
	1.6	1680	1325	1045	1.19
	1.7	1650	1340	1052	1.20
	1.8	1605	1375	1076	1.23
T5'	0.8	1495	1010	535	0.60
	0.9	1445	1045	553	0.62
	1.0	1390	1080	567	0.64
	1.1	1360	1100	577	0.65
	1.2	1310	1135	596	0.68
	1.3	1270	1160	610	0.69
	1.4	1235	1180	616	0.70
	1.5	1200	1210	633	0.72
	1.6	-	-	-	-
	1.7	-	-	-	-
	1.8	-	-	-	-

* In DSG0363W / DSG0364W 45K, DSG0363W / DSG0364W 70K, DSG0363W / DSG0364W / DSG0367W 90K, DSG0483W / DSG0484W 70K, DSG0483W / DSG0484W 90K, DSG0483W / DSG0484W / DSG0487W 115K, DSG0603W / DSG0604W 90K, DSG0603W / DSG0604W 115K, AND DSG0603W / DSG0604W / DSG0607W 140K DOWNSHOT & HORIZONTAL Tables, T1 and T1' values are for fan mode only

** In DSG0363W / DSG0364W 45K, DSG0363W / DSG0364W 70K, DSG0363W / DSG0364W / DSG0367W 90K, DSG0483W / DSG0484W 70K, DSG0483W / DSG0484W 90K, DSG0483W / DSG0484W / DSG0487W 115K, DSG0603W / DSG0604W 90K, DSG0603W / DSG0604W 115K, AND DSG0603W / DSG0604W / DSG0607W 140K DOWNSHOT & HORIZONTAL Tables, T3 and T3' values are for heat mode only

DSG0483W / DSG0484W 70K HORIZONTAL

SPEED TAP	EXTERNAL STATIC PRESSURE (ESP) IN W. C.	AIRFLOW (CFM)	RPM	WATTS	BHP
T1 *	0.8	835	845	240	0.26
	0.9	760	880	249	0.27
	1.0	645	915	257	0.28
	1.1	760	935	264	0.28
	1.2	720	980	273	0.30
	1.3	735	1005	278	0.31
	1.4	670	1025	287	0.31
	1.5	-	-	-	-
	1.6	-	-	-	-
	1.7	-	-	-	-
	1.8	-	-	-	-
T2	0.8	1825	1015	671	0.75
	0.9	1780	1045	690	0.78
	1.0	1740	1075	705	0.80
	1.1	1690	1095	715	0.81
	1.2	1640	1120	735	0.83
	1.3	1585	1145	751	0.85
	1.4	1545	1170	758	0.87
	1.5	1510	1190	778	0.88
	1.6	1470	1210	791	0.90
	1.7	1435	1235	797	0.92
	1.8	1390	1270	818	0.94
T3 **	0.8	1160	900	346	0.39
	0.9	1095	925	359	0.40
	1.0	1010	965	371	0.41
	1.1	1045	985	378	0.42
	1.2	1000	1020	391	0.44
	1.3	985	1050	400	0.45
	1.4	935	1070	408	0.46
	1.5	845	1100	420	0.47
	1.6	800	1125	428	0.48
	1.7	740	1130	431	0.48
	1.8	715	1155	443	0.49
T4	0.8	1950	1045	762	0.86
	0.9	1910	1075	781	0.88
	1.0	1875	1095	797	0.90
	1.1	1830	1115	808	0.91
	1.2	1775	1145	827	0.94
	1.3	1725	1170	845	0.96
	1.4	1685	1190	853	0.97
	1.5	1645	1210	875	0.99
	1.6	1605	1235	890	1.01
	1.7	1570	1255	897	1.03
	1.8	1525	1285	919	1.05
T5	0.8	1320	920	409	0.46
	0.9	1260	955	423	0.47
	1.0	1200	990	435	0.49
	1.1	1190	1005	444	0.50
	1.2	1145	1045	460	0.52
	1.3	1120	1075	470	0.53
	1.4	1070	1090	476	0.54
	1.5	1000	1120	490	0.55
	1.6				
	1.7				
	1.8				

DSG0483W / DSG0484W 70K HORIZONTAL

SPEED TAP	EXTERNAL STATIC PRESSURE (ESP) IN W. C.	AIRFLOW (CFM)	RPM	WATTS	BHP
T1' *	0.8	1160	900	346	0.39
	0.9	1095	925	359	0.40
	1.0	1010	965	371	0.41
	1.1	1045	985	378	0.42
	1.2	1000	1020	391	0.44
	1.3	985	1050	400	0.45
	1.4	935	1070	408	0.46
	1.5	845	1100	420	0.47
	1.6	800	1125	428	0.48
	1.7	740	1130	431	0.48
	1.8	715	1155	443	0.49
T2'	0.8	2000	1060	808	0.91
	0.9	1970	1090	828	0.93
	1.0	1935	1105	845	0.95
	1.1	1890	1125	855	0.96
	1.2	1845	1155	875	0.99
	1.3	1795	1180	893	1.01
	1.4	1745	1200	902	1.03
	1.5	1710	1225	925	1.05
	1.6	1670	1245	941	1.07
	1.7	1640	1265	947	1.08
	1.8	1590	1295	970	1.11
T3' **	0.8	1415	940	450	0.51
	0.9	1365	970	466	0.52
	1.0	1300	1000	479	0.54
	1.1	1280	1025	487	0.55
	1.2	1230	1060	504	0.57
	1.3	1200	1085	516	0.58
	1.4	1160	1100	523	0.59
	1.5	1090	1130	538	0.61
	1.6	1055	1155	546	0.62
	1.7	1005	1170	551	0.63
	1.8	970	1200	566	0.65
T4'	0.8	-	-	-	-
	0.9	-	-	-	-
	1.0	1995	1120	893	1.00
	1.1	1955	1135	903	1.02
	1.2	1910	1165	923	1.04
	1.3	1865	1190	941	1.06
	1.4	1815	1210	952	1.08
	1.5	1770	1235	977	1.11
	1.6	1730	1260	993	1.13
	1.7	1700	1275	999	1.14
	1.8	1655	1305	1022	1.17
T5'	0.8	1540	960	508	0.57
	0.9	1490	995	525	0.59
	1.0	1430	1025	539	0.61
	1.1	1400	1045	548	0.62
	1.2	1350	1080	566	0.64
	1.3	1310	1100	580	0.65
	1.4	1270	1120	585	0.67
	1.5	1215	1150	601	0.68
	1.6	-	-	-	-
	1.7	-	-	-	-
	1.8	-	-	-	-

* In DSG0363W / DSG0364W 45K, DSG0363W / DSG0364W 70K, DSG0363W / DSG0364W / DSG0367W 90K, DSG0483W / DSG0484W 70K, DSG0483W / DSG0484W 90K, DSG0483W / DSG0484W / DSG0487W 115K, DSG0603W / DSG0604W 90K, DSG0603W / DSG0604W 115K, AND DSG0603W / DSG0604W / DSG0607W 140K DOWNSHOT & HORIZONTAL Tables, T1 and T1' values are for fan mode only

** In DSG0363W / DSG0364W 45K, DSG0363W / DSG0364W 70K, DSG0363W / DSG0364W / DSG0367W 90K, DSG0483W / DSG0484W 70K, DSG0483W / DSG0484W 90K, DSG0483W / DSG0484W / DSG0487W 115K, DSG0603W / DSG0604W 90K, DSG0603W / DSG0604W 115K, AND DSG0603W / DSG0604W / DSG0607W 140K DOWNSHOT & HORIZONTAL Tables, T3 and T3' values are for heat mode only

DSG0483W / DSG0484W 90K DOWNSHOT

SPEED TAP	EXTERNAL STATIC PRESSURE (ESP) IN W. C.	AIRFLOW (CFM)	RPM	WATTS	BHP
T1 *	0.8	1055	930	338	0.37
	0.9	995	965	350	0.39
	1.0	900	1005	362	0.40
	1.1	955	1025	369	0.41
	1.2	910	1065	383	0.43
	1.3	900	1095	391	0.44
	1.4	850	1115	399	0.45
	1.5	755	1150	412	0.46
	1.6	710	1175	420	0.47
	1.7	645	1180	422	0.47
	1.8	625	1200	433	0.48
T2	0.8	1770	1070	706	0.79
	0.9	1730	1100	726	0.82
	1.0	1690	1130	742	0.84
	1.1	1640	1150	753	0.85
	1.2	1590	1180	774	0.88
	1.3	1540	1205	791	0.89
	1.4	1500	1230	798	0.91
	1.5	1465	1255	819	0.93
	1.6	1425	1275	833	0.95
	1.7	1395	1300	839	0.97
	1.8	1350	1335	861	0.99
T3 **	0.8	1505	1015	540	0.61
	0.9	1455	1045	558	0.63
	1.0	1400	1080	573	0.65
	1.1	1370	1100	582	0.66
	1.2	1320	1135	602	0.68
	1.3	1280	1160	615	0.70
	1.4	1240	1180	622	0.71
	1.5	1190	1210	639	0.73
	1.6	1155	1230	650	0.74
	1.7	1110	1250	655	0.75
	1.8	1070	1290	674	0.77
T4	0.8	1895	1100	802	0.90
	0.9	1855	1130	822	0.93
	1.0	1820	1155	839	0.95
	1.1	1775	1175	850	0.96
	1.2	1725	1205	871	0.99
	1.3	1675	1230	889	1.01
	1.4	1635	1250	898	1.02
	1.5	1595	1275	921	1.04
	1.6	1560	1300	937	1.06
	1.7	1525	1320	944	1.08
	1.8	1480	1355	967	1.11
T5	0.8	1635	1040	615	0.69
	0.9	1590	1070	634	0.71
	1.0	1545	1105	650	0.74
	1.1	1500	1125	660	0.75
	1.2	1450	1155	681	0.77
	1.3	1405	1185	696	0.79
	1.4	1365	1205	702	0.80
	1.5	1320	1230	721	0.82
	1.6	1285	1250	733	0.83
	1.7	1250	1275	739	0.85
	1.8	1205	1310	760	0.87

DSG0483W / DSG0484W 90K DOWNSHOT

SPEED TAP	EXTERNAL STATIC PRESSURE (ESP) IN W. C.	AIRFLOW (CFM)	RPM	WATTS	BHP
T1' *	0.8	1365	985	469	0.53
	0.9	1315	1020	485	0.54
	1.0	1245	1055	499	0.56
	1.1	1235	1075	508	0.57
	1.2	1190	1110	526	0.59
	1.3	1155	1140	538	0.61
	1.4	1115	1160	544	0.62
	1.5	1050	1190	560	0.63
	1.6	1015	1215	570	0.65
	1.7	965	1230	574	0.66
	1.8	930	1260	591	0.67
T2'	0.8	1950	1115	851	0.96
	0.9	1915	1145	872	0.98
	1.0	1880	1165	889	1.00
	1.1	1835	1185	900	1.02
	1.2	1790	1215	921	1.04
	1.3	1745	1240	940	1.06
	1.4	1695	1265	949	1.08
	1.5	1660	1290	974	1.11
	1.6	1620	1310	990	1.12
	1.7	1590	1330	997	1.14
	1.8	1545	1365	1021	1.17
T3' **	0.8	1705	1055	660	0.74
	0.9	1660	1085	680	0.76
	1.0	1620	1115	696	0.79
	1.1	1570	1135	706	0.80
	1.2	1520	1170	727	0.82
	1.3	1475	1195	743	0.84
	1.4	1435	1215	750	0.86
	1.5	1395	1240	770	0.87
	1.6	1360	1265	782	0.89
	1.7	1325	1285	789	0.91
	1.8	1275	1325	810	0.93
T4'	0.8	2000	1130	902	1.01
	0.9	1970	1160	923	1.04
	1.0	1935	1180	940	1.06
	1.1	1900	1195	951	1.07
	1.2	1855	1225	972	1.10
	1.3	1810	1250	991	1.12
	1.4	1760	1275	1002	1.14
	1.5	1720	1300	1028	1.16
	1.6	1680	1325	1045	1.19
	1.7	1650	1340	1052	1.20
	1.8	1605	1375	1076	1.23
T5'	0.8	1820	1085	741	0.84
	0.9	1780	1110	762	0.86
	1.0	1740	1140	778	0.88
	1.1	1690	1160	789	0.89
	1.2	1640	1190	810	0.92
	1.3	1590	1215	827	0.94
	1.4	1550	1235	835	0.95
	1.5	1515	1260	857	0.97
	1.6	1480	1285	871	0.99
	1.7	1445	1305	878	1.01
	1.8	1400	1345	900	1.04

* In DSG0363W / DSG0364W 45K, DSG0363W / DSG0364W 70K, DSG0363W / DSG0364W / DSG0367W 90K, DSG0483W / DSG0484W 70K, DSG0483W / DSG0484W 90K, DSG0483W / DSG0484W / DSG0487W 115K, DSG0603W / DSG0604W 90K, DSG0603W / DSG0604W 115K, AND DSG0603W / DSG0604W / DSG0607W 140K DOWNSHOT & HORIZONTAL Tables, T1 and T1' values are for fan mode only

** In DSG0363W / DSG0364W 45K, DSG0363W / DSG0364W 70K, DSG0363W / DSG0364W / DSG0367W 90K, DSG0483W / DSG0484W 70K, DSG0483W / DSG0484W 90K, DSG0483W / DSG0484W / DSG0487W 115K, DSG0603W / DSG0604W 90K, DSG0603W / DSG0604W 115K, AND DSG0603W / DSG0604W / DSG0607W 140K DOWNSHOT & HORIZONTAL Tables, T3 and T3' values are for heat mode only

DSG0483W / DSG0484W 90K HORIZONTAL

SPEED TAP	EXTERNAL STATIC PRESSURE (ESP) IN W. C.	AIRFLOW (CFM)	RPM	WATTS	BHP
T1 *	0.8	1085	885	321	0.35
	0.9	1025	915	333	0.37
	1.0	925	955	344	0.38
	1.1	985	975	351	0.39
	1.2	935	1010	364	0.40
	1.3	925	1040	371	0.42
	1.4	875	1060	379	0.42
	1.5	780	1095	391	0.44
	1.6	730	1115	399	0.45
	1.7	665	1120	401	0.45
	1.8	645	1140	411	0.46
T2	0.8	1825	1015	671	0.75
	0.9	1780	1045	690	0.78
	1.0	1740	1075	705	0.80
	1.1	1690	1095	715	0.81
	1.2	1640	1120	735	0.83
	1.3	1585	1145	751	0.85
	1.4	1545	1170	758	0.87
	1.5	1510	1190	778	0.88
	1.6	1470	1210	791	0.90
	1.7	1435	1235	797	0.92
	1.8	1390	1270	818	0.94
T3 **	0.8	1550	965	513	0.58
	0.9	1500	995	530	0.60
	1.0	1440	1025	544	0.61
	1.1	1410	1045	553	0.63
	1.2	1360	1080	572	0.65
	1.3	1320	1100	584	0.66
	1.4	1275	1120	591	0.67
	1.5	1225	1150	607	0.69
	1.6	1190	1170	618	0.70
	1.7	1145	1190	622	0.71
	1.8	1100	1225	640	0.73
T4	0.8	1950	1045	762	0.86
	0.9	1910	1075	781	0.88
	1.0	1875	1095	797	0.90
	1.1	1830	1115	808	0.91
	1.2	1775	1145	827	0.94
	1.3	1725	1170	845	0.96
	1.4	1685	1190	853	0.97
	1.5	1645	1210	875	0.99
	1.6	1605	1235	890	1.01
	1.7	1570	1255	897	1.03
	1.8	1525	1285	919	1.05
T5	0.8	1685	990	584	0.66
	0.9	1640	1015	602	0.68
	1.0	1590	1050	618	0.70
	1.1	1545	1070	627	0.71
	1.2	1495	1095	647	0.73
	1.3	1445	1125	661	0.75
	1.4	1405	1145	667	0.76
	1.5	1360	1170	685	0.78
	1.6	1325	1190	696	0.79
	1.7	1290	1210	702	0.81
	1.8	1240	1245	722	0.83

DSG0483W / DSG0484W 90K HORIZONTAL

SPEED TAP	EXTERNAL STATIC PRESSURE (ESP) IN W. C.	AIRFLOW (CFM)	RPM	WATTS	BHP
T1' *	0.8	1405	935	446	0.50
	0.9	1355	970	461	0.52
	1.0	1280	1000	474	0.53
	1.1	1270	1020	483	0.54
	1.2	1225	1055	500	0.56
	1.3	1190	1085	511	0.58
	1.4	1150	1100	517	0.59
	1.5	1080	1130	532	0.60
	1.6	1045	1155	542	0.62
	1.7	995	1170	545	0.62
	1.8	960	1195	561	0.64
T2'	0.8	2000	1060	808	0.91
	0.9	1970	1090	828	0.93
	1.0	1935	1105	845	0.95
	1.1	1890	1125	855	0.96
	1.2	1845	1155	875	0.99
	1.3	1795	1180	893	1.01
	1.4	1745	1200	902	1.03
	1.5	1710	1225	925	1.05
	1.6	1670	1245	941	1.07
	1.7	1640	1265	947	1.08
	1.8	1590	1295	970	1.11
T3' **	0.8	1755	1000	627	0.70
	0.9	1710	1030	646	0.73
	1.0	1670	1060	661	0.75
	1.1	1615	1080	671	0.76
	1.2	1565	1110	691	0.78
	1.3	1520	1135	706	0.80
	1.4	1480	1155	713	0.81
	1.5	1435	1180	732	0.83
	1.6	1400	1200	743	0.85
	1.7	1365	1220	750	0.86
	1.8	1315	1260	770	0.89
T4'	0.8	-	-	-	-
	0.9	-	-	-	-
	1.0	1995	1120	893	1.00
	1.1	1955	1135	903	1.02
	1.2	1910	1165	923	1.04
	1.3	1865	1190	941	1.06
	1.4	1815	1210	952	1.08
	1.5	1770	1235	977	1.11
	1.6	1730	1260	993	1.13
	1.7	1700	1275	999	1.14
	1.8	1655	1305	1022	1.17
T5'	0.8	1875	1030	704	0.79
	0.9	1835	1055	724	0.81
	1.0	1790	1085	739	0.84
	1.1	1740	1100	750	0.85
	1.2	1690	1130	770	0.87
	1.3	1640	1155	786	0.89
	1.4	1595	1175	793	0.91
	1.5	1560	1195	814	0.92
	1.6	1525	1220	827	0.94
	1.7	1490	1240	834	0.96
	1.8	1440	1280	855	0.99

* In DSG0363W / DSG0364W 45K, DSG0363W / DSG0364W 70K, DSG0363W / DSG0364W / DSG0367W 90K, DSG0483W / DSG0484W 70K, DSG0483W / DSG0484W 90K, DSG0483W / DSG0484W / DSG0487W 115K, DSG0603W / DSG0604W 90K, DSG0603W / DSG0604W 115K, AND DSG0603W / DSG0604W / DSG0607W 140K DOWNSHOT & HORIZONTAL Tables, T1 and T1' values are for fan mode only

** In DSG0363W / DSG0364W 45K, DSG0363W / DSG0364W 70K, DSG0363W / DSG0364W / DSG0367W 90K, DSG0483W / DSG0484W 70K, DSG0483W / DSG0484W 90K, DSG0483W / DSG0484W / DSG0487W 115K, DSG0603W / DSG0604W 90K, DSG0603W / DSG0604W 115K, AND DSG0603W / DSG0604W / DSG0607W 140K DOWNSHOT & HORIZONTAL Tables, T3 and T3' values are for heat mode only

DSG0483W / DSG0484W / DSG0487W 115K DOWNSHOT

SPEED TAP	EXTERNAL STATIC PRESSURE (ESP) IN W. C.	AIRFLOW (CFM)	RPM	WATTS	BHP
T1 *	0.8	680	870	214	0.22
	0.9	605	905	221	0.23
	1.0	580	940	228	0.24
	1.1	555	975	235	0.25
	1.2	535	1010	242	0.26
	1.3	500	1045	249	0.27
	1.4	470	1080	256	0.28
	1.5	445	1115	263	0.29
	1.6	410	1150	270	0.30
	1.7	380	1185	277	0.30
	1.8	350	1220	284	0.31
T2	0.8	1770	1070	706	0.79
	0.9	1730	1100	726	0.82
	1.0	1690	1130	742	0.84
	1.1	1640	1150	753	0.85
	1.2	1590	1180	774	0.88
	1.3	1540	1205	791	0.89
	1.4	1500	1230	798	0.91
	1.5	1465	1255	819	0.93
	1.6	1425	1275	833	0.95
	1.7	1395	1300	839	0.97
	1.8	1350	1335	861	0.99
T3 **	0.8	875	900	273	0.30
	0.9	805	935	284	0.31
	1.0	695	975	293	0.32
	1.1	795	995	300	0.33
	1.2	755	1040	311	0.34
	1.3	760	1070	317	0.35
	1.4	700	1090	326	0.36
	1.5	670	1120	335	0.37
	1.6	640	1150	343	0.38
	1.7	610	1180	352	0.39
	1.8	580	1210	361	0.40
T4	0.8	1895	1100	802	0.90
	0.9	1855	1130	822	0.93
	1.0	1820	1155	839	0.95
	1.1	1775	1175	850	0.96
	1.2	1725	1205	871	0.99
	1.3	1675	1230	889	1.01
	1.4	1635	1250	898	1.02
	1.5	1595	1275	921	1.04
	1.6	1560	1300	937	1.06
	1.7	1525	1320	944	1.08
	1.8	1480	1355	967	1.11
T5	0.8	1235	965	411	0.46
	0.9	1180	995	425	0.47
	1.0	1105	1035	439	0.49
	1.1	1115	1055	447	0.50
	1.2	1070	1090	463	0.52
	1.3	1050	1120	473	0.53
	1.4	1005	1140	480	0.54
	1.5	925	1175	495	0.56
	1.6	885	1200	504	0.57
	1.7	835	1210	507	0.58
	1.8	805	1235	522	0.59

DSG0483W / DSG0484W / DSG0487W 115K DOWNSHOT

SPEED TAP	EXTERNAL STATIC PRESSURE (ESP) IN W. C.	AIRFLOW (CFM)	RPM	WATTS	BHP
T1' *	0.8	1445	1000	509	0.57
	0.9	1395	1035	526	0.59
	1.0	1335	1070	541	0.61
	1.1	1310	1090	550	0.62
	1.2	1265	1125	569	0.64
	1.3	1230	1155	582	0.66
	1.4	1190	1175	588	0.67
	1.5	1130	1200	605	0.69
	1.6	1095	1225	615	0.70
	1.7	1050	1245	620	0.71
	1.8	1010	1275	638	0.73
T2'	0.8	1950	1115	851	0.96
	0.9	1915	1145	872	0.98
	1.0	1880	1165	889	1.00
	1.1	1835	1185	900	1.02
	1.2	1790	1215	921	1.04
	1.3	1745	1240	940	1.06
	1.4	1695	1265	949	1.08
	1.5	1660	1290	974	1.11
	1.6	1620	1310	990	1.12
	1.7	1590	1330	997	1.14
	1.8	1545	1365	1021	1.17
T3' **	0.8	1545	1020	561	0.63
	0.9	1495	1055	579	0.65
	1.0	1445	1085	595	0.67
	1.1	1405	1105	604	0.68
	1.2	1355	1140	624	0.71
	1.3	1315	1170	638	0.72
	1.4	1280	1190	645	0.74
	1.5	1230	1215	662	0.75
	1.6	1190	1240	673	0.77
	1.7	1150	1260	679	0.78
	1.8	1110	1295	698	0.80
T4'	0.8	2000	1130	902	1.01
	0.9	1970	1160	923	1.04
	1.0	1935	1180	940	1.06
	1.1	1900	1195	951	1.07
	1.2	1855	1225	972	1.10
	1.3	1810	1250	991	1.12
	1.4	1760	1275	1002	1.14
	1.5	1720	1300	1028	1.16
	1.6	1680	1325	1045	1.19
	1.7	1650	1340	1052	1.20
	1.8	1605	1375	1076	1.23
T5'	0.8	1805	1080	730	0.82
	0.9	1760	1110	750	0.85
	1.0	1725	1135	766	0.86
	1.1	1675	1155	777	0.88
	1.2	1625	1185	798	0.90
	1.3	1575	1215	815	0.93
	1.4	1535	1235	823	0.94
	1.5	1500	1260	844	0.96
	1.6	1460	1280	858	0.97
	1.7	1430	1305	865	0.99
	1.8	1380	1340	887	1.02

* In DSG0363W / DSG0364W 45K, DSG0363W / DSG0364W 70K, DSG0363W / DSG0364W / DSG0367W 90K, DSG0483W / DSG0484W 70K, DSG0483W / DSG0484W 90K, DSG0483W / DSG0484W / DSG0487W 115K, DSG0603W / DSG0604W 90K, DSG0603W / DSG0604W 115K, AND DSG0603W / DSG0604W / DSG0607W 140K DOWNSHOT & HORIZONTAL Tables, T1 and T1' values are for fan mode only

** In DSG0363W / DSG0364W 45K, DSG0363W / DSG0364W 70K, DSG0363W / DSG0364W / DSG0367W 90K, DSG0483W / DSG0484W 70K, DSG0483W / DSG0484W 90K, DSG0483W / DSG0484W / DSG0487W 115K, DSG0603W / DSG0604W 90K, DSG0603W / DSG0604W 115K, AND DSG0603W / DSG0604W / DSG0607W 140K DOWNSHOT & HORIZONTAL Tables, T3 and T3' values are for heat mode only

DSG0483W / DSG0484W / DSG0487W 115K HORIZONTAL

SPEED TAP	EXTERNAL STATIC PRESSURE (ESP) IN W. C.	AIRFLOW (CFM)	RPM	WATTS	BHP
T1 *	0.8	700	825	203	0.21
	0.9	625	860	210	0.22
	1.0	580	895	217	0.23
	1.1	535	930	224	0.24
	1.2	565	965	231	0.25
	1.3	545	1000	238	0.26
	1.4	525	1035	245	0.27
	1.5	505	1070	252	0.28
	1.6	485	1105	259	0.28
	1.7	465	1140	266	0.29
	1.8	445	1175	273	0.30
T2	0.8	1825	1015	671	0.75
	0.9	1780	1045	690	0.78
	1.0	1740	1075	705	0.80
	1.1	1690	1095	715	0.81
	1.2	1640	1120	735	0.83
	1.3	1585	1145	751	0.85
	1.4	1545	1170	758	0.87
	1.5	1510	1190	778	0.88
	1.6	1470	1210	791	0.90
	1.7	1435	1235	797	0.92
	1.8	1390	1270	818	0.94
T3 **	0.8	900	855	259	0.28
	0.9	830	890	270	0.29
	1.0	715	925	278	0.30
	1.1	820	945	285	0.31
	1.2	780	990	295	0.33
	1.3	785	1015	301	0.33
	1.4	720	1035	310	0.34
	1.5	690	1065	319	0.35
	1.6	660	1100	327	0.36
	1.7	630	1125	336	0.37
	1.8	600	1155	344	0.38
T4	0.8	1950	1045	762	0.86
	0.9	1910	1075	781	0.88
	1.0	1875	1095	797	0.90
	1.1	1830	1115	808	0.91
	1.2	1775	1145	827	0.94
	1.3	1725	1170	845	0.96
	1.4	1685	1190	853	0.97
	1.5	1645	1210	875	0.99
	1.6	1605	1235	890	1.01
	1.7	1570	1255	897	1.03
	1.8	1525	1285	919	1.05
T5	0.8	1270	915	390	0.44
	0.9	1215	945	404	0.45
	1.0	1140	985	417	0.47
	1.1	1150	1000	425	0.48
	1.2	1100	1035	440	0.49
	1.3	1080	1065	449	0.51
	1.4	1035	1085	456	0.52
	1.5	955	1115	470	0.53
	1.6	910	1140	479	0.54
	1.7	860	1150	482	0.55
	1.8	830	1175	496	0.56

DSG0483W / DSG0484W / DSG0487W 115K HORIZONTAL

SPEED TAP	EXTERNAL STATIC PRESSURE (ESP) IN W. C.	AIRFLOW (CFM)	RPM	WATTS	BHP
T1' *	0.8	1490	950	484	0.54
	0.9	1435	985	500	0.56
	1.0	1375	1015	514	0.58
	1.1	1350	1035	523	0.59
	1.2	1305	1070	541	0.61
	1.3	1265	1095	553	0.63
	1.4	1225	1115	559	0.64
	1.5	1165	1140	575	0.65
	1.6	1130	1165	584	0.67
	1.7	1080	1185	589	0.68
	1.8	1040	1210	606	0.69
T2'	0.8	2000	1060	808	0.91
	0.9	1970	1090	828	0.93
	1.0	1935	1105	845	0.95
	1.1	1890	1125	855	0.96
	1.2	1845	1155	875	0.99
	1.3	1795	1180	893	1.01
	1.4	1745	1200	902	1.03
	1.5	1710	1225	925	1.05
	1.6	1670	1245	941	1.07
	1.7	1640	1265	947	1.08
	1.8	1590	1295	970	1.11
T3' **	0.8	1590	970	533	0.60
	0.9	1540	1000	550	0.62
	1.0	1490	1030	565	0.64
	1.1	1445	1050	574	0.65
	1.2	1395	1085	593	0.67
	1.3	1355	1110	606	0.69
	1.4	1320	1130	613	0.70
	1.5	1265	1155	629	0.71
	1.6	1225	1180	639	0.73
	1.7	1200	1195	645	0.74
	1.8	-	-	-	-
T4'	0.8	-	-	-	-
	0.9	-	-	-	-
	1.0	1995	1120	893	1.00
	1.1	1955	1135	903	1.02
	1.2	1910	1165	923	1.04
	1.3	1865	1190	941	1.06
	1.4	1815	1210	952	1.08
	1.5	1770	1235	977	1.11
	1.6	1730	1260	993	1.13
	1.7	1700	1275	999	1.14
	1.8	1655	1305	1022	1.17
T5'	0.8	1860	1025	694	0.78
	0.9	1815	1055	713	0.80
	1.0	1775	1080	728	0.82
	1.1	1725	1095	738	0.83
	1.2	1675	1125	758	0.86
	1.3	1620	1155	774	0.88
	1.4	1580	1175	782	0.89
	1.5	1545	1195	802	0.91
	1.6	1505	1215	815	0.93
	1.7	1475	1240	822	0.94
	1.8	1420	1275	843	0.97

* In DSG0363W / DSG0364W 45K, DSG0363W / DSG0364W 70K, DSG0363W / DSG0364W / DSG0367W 90K, DSG0483W / DSG0484W 70K, DSG0483W / DSG0484W 90K, DSG0483W / DSG0484W / DSG0487W 115K, DSG0603W / DSG0604W 90K, DSG0603W / DSG0604W 115K, AND DSG0603W / DSG0604W / DSG0607W 140K DOWNSHOT & HORIZONTAL Tables, T1 and T1' values are for fan mode only

** In DSG0363W / DSG0364W 45K, DSG0363W / DSG0364W 70K, DSG0363W / DSG0364W / DSG0367W 90K, DSG0483W / DSG0484W 70K, DSG0483W / DSG0484W 90K, DSG0483W / DSG0484W / DSG0487W 115K, DSG0603W / DSG0604W 90K, DSG0603W / DSG0604W 115K, AND DSG0603W / DSG0604W / DSG0607W 140K DOWNSHOT & HORIZONTAL Tables, T3 and T3' values are for heat mode only

DSG0603W / DSG0604W 90K DOWNSHOT

SPEED TAP	EXTERNAL STATIC PRESSURE (ESP) IN W. C.	AIRFLOW (CFM)	RPM	WATTS	BHP
T1 *	0.8	1095	940	359	0.28
	0.9	1045	980	376	0.29
	1	985	1015	389	0.30
	1.1	925	1055	401	0.31
	1.2	880	1085	412	0.32
	1.3	825	1115	421	0.33
	1.4	750	1165	496	0.35
	1.5	670	1195	512	0.36
	1.6	585	1235	464	0.37
	1.7	535	1260	472	0.38
	1.8	490	1290	481	0.39
T2	0.8	1905	1160	918	0.97
	0.9	1870	1185	936	0.99
	1	1835	1210	956	1.01
	1.1	1800	1235	975	1.03
	1.2	1760	1265	995	1.05
	1.3	1720	1290	1015	1.07
	1.4	1675	1315	1038	1.09
	1.5	1630	1335	1055	1.11
	1.6	1585	1365	1068	1.14
	1.7	1545	1390	1087	1.16
	1.8	1505	1410	1105	1.17
T3 **	0.8	1325	1000	476	0.44
	0.9	1275	1035	492	0.46
	1	1230	1070	507	0.47
	1.1	1175	1100	521	0.48
	1.2	1130	1130	536	0.50
	1.3	1085	1165	548	0.51
	1.4	1015	1205	604	0.53
	1.5	945	1230	620	0.54
	1.6	875	1270	594	0.56
	1.7	830	1290	604	0.57
	1.8	780	1320	616	0.58
T4	0.8	2035	1195	1049	1.11
	0.9	2000	1215	1068	1.13
	1	1965	1240	1089	1.15
	1.1	1930	1270	1109	1.18
	1.2	1900	1295	1131	1.20
	1.3	1860	1315	1152	1.22
	1.4	1815	1340	1171	1.24
	1.5	1775	1365	1188	1.27
	1.6	1740	1390	1208	1.29
	1.7	1700	1410	1228	1.31
	1.8	1660	1435	1247	1.33
T5	0.8	1445	1030	549	0.53
	0.9	1405	1065	566	0.55
	1	1355	1100	583	0.57
	1.1	1310	1125	598	0.58
	1.2	1260	1160	614	0.60
	1.3	1220	1190	628	0.62
	1.4	1155	1225	676	0.64
	1.5	1090	1255	692	0.65
	1.6	1030	1285	675	0.67
	1.7	980	1310	687	0.68
	1.8	935	1335	701	0.69

DSG0603W / DSG0604W 90K DOWNSHOT

SPEED TAP	EXTERNAL STATIC PRESSURE (ESP) IN W. C.	AIRFLOW (CFM)	RPM	WATTS	BHP
T1' *	0.8	1250.00	980.00	435.00	0.38
	0.9	1200.00	1015.00	451.00	0.40
	1	1145.00	1055.00	466.00	0.41
	1.1	1095.00	1085.00	479.00	0.43
	1.2	1050.00	1115.00	492.00	0.44
	1.3	995.00	1145.00	503.00	0.45
	1.4	925.00	1190.00	565.00	0.47
	1.5	860.00	1220.00	581.00	0.48
	1.6	775.00	1260.00	548.00	0.49
	1.7	735.00	1280.00	558.00	0.50
	1.8	690.00	1305.00	568.00	0.51
T2'	0.8	2095	1210	1120	1.18
	0.9	2065	1235	1139	1.20
	1	2030	1260	1160	1.23
	1.1	2000	1285	1181	1.25
	1.2	1960	1310	1202	1.28
	1.3	1925	1330	1223	1.30
	1.4	1885	1355	1241	1.32
	1.5	1845	1380	1260	1.34
	1.6	1810	1400	1282	1.36
	1.7	1765	1420	1302	1.38
	1.8	1735	1445	1322	1.41
T3' **	0.8	1565	1065	632	0.64
	0.9	1525	1095	648	0.65
	1	1480	1125	665	0.67
	1.1	1435	1160	682	0.69
	1.2	1395	1185	699	0.71
	1.3	1350	1215	715	0.73
	1.4	1290	1245	755	0.74
	1.5	1240	1275	771	0.76
	1.6	1175	1305	763	0.78
	1.7	1130	1325	778	0.79
	1.8	1085	1355	792	0.81
T4'	0.8	2445	1315	1593	1.65
	0.9	2415	1335	1615	1.68
	1	2390	1360	1637	1.71
	1.1	2360	1380	1661	1.73
	1.2	2330	1400	1683	1.76
	1.3	2295	1420	1705	1.78
	1.4	2255	1435	1723	1.80
	1.5	2230	1460	1746	1.83
	1.6	2195	1480	1774	1.86
	1.7	2165	1500	1798	1.88
	1.8	2125	1500	1822	1.88
T5'	0.8	2445	1315	1593	1.65
	0.9	2415	1335	1615	1.68
	1	2390	1360	1637	1.71
	1.1	2360	1380	1661	1.73
	1.2	2330	1400	1683	1.76
	1.3	2295	1420	1705	1.78
	1.4	2255	1435	1723	1.80
	1.5	2230	1460	1746	1.83
	1.6	2195	1480	1774	1.86
	1.7	2165	1500	1798	1.88
	1.8	2125	1500	1822	1.88

* In DSG0363W / DSG0364W 45K, DSG0363W / DSG0364W 70K, DSG0363W / DSG0364W / DSG0367W 90K, DSG0483W / DSG0484W 70K, DSG0483W / DSG0484W 90K, DSG0483W / DSG0484W / DSG0487W 115K, DSG0603W / DSG0604W 90K, DSG0603W / DSG0604W 115K, AND DSG0603W / DSG0604W / DSG0607W 140K DOWNSHOT & HORIZONTAL Tables, T1 and T1' values are for fan mode only

** In DSG0363W / DSG0364W 45K, DSG0363W / DSG0364W 70K, DSG0363W / DSG0364W / DSG0367W 90K, DSG0483W / DSG0484W 70K, DSG0483W / DSG0484W 90K, DSG0483W / DSG0484W / DSG0487W 115K, DSG0603W / DSG0604W 90K, DSG0603W / DSG0604W 115K, AND DSG0603W / DSG0604W / DSG0607W 140K DOWNSHOT & HORIZONTAL Tables, T3 and T3' values are for heat mode only

DSG0603W / DSG0604W 90K HORIZONTAL

SPEED TAP	EXTERNAL STATIC PRESSURE (ESP) IN W. C.	AIRFLOW (CFM)	RPM	WATTS	BHP
T1 *	0.8	1130	895	341	0.27
	0.9	1075	930	357	0.28
	1.0	1015	965	370	0.29
	1.1	955	1000	381	0.30
	1.2	905	1030	391	0.31
	1.3	850	1060	400	0.32
	1.4	775	1105	471	0.33
	1.5	690	1135	486	0.34
	1.6	600	1175	441	0.35
	1.7	550	1195	448	0.36
	1.8	505	1225	457	0.37
T2	0.8	1960	1100	872	0.92
	0.9	1925	1125	889	0.94
	1.0	1890	1150	908	0.96
	1.1	1855	1175	926	0.98
	1.2	1815	1200	945	1.00
	1.3	1770	1225	964	1.02
	1.4	1725	1250	986	1.04
	1.5	1680	1270	1002	1.06
	1.6	1635	1295	1015	1.08
	1.7	1590	1320	1033	1.10
	1.8	1550	1340	1050	1.12
T3 **	0.8	1365	950	452	0.42
	0.9	1315	985	467	0.43
	1.0	1265	1015	482	0.45
	1.1	1210	1045	495	0.46
	1.2	1165	1075	509	0.47
	1.3	1115	1105	521	0.49
	1.4	1045	1145	574	0.50
	1.5	975	1170	589	0.51
	1.6	900	1205	564	0.53
	1.7	855	1225	574	0.54
	1.8	805	1255	585	0.55
T4	0.8	2095	1135	997	1.05
	0.9	2060	1155	1015	1.07
	1.0	2025	1180	1035	1.09
	1.1	1990	1205	1054	1.12
	1.2	1955	1230	1074	1.14
	1.3	1915	1250	1094	1.16
	1.4	1870	1275	1112	1.18
	1.5	1830	1295	1129	1.20
	1.6	1790	1320	1148	1.22
	1.7	1750	1340	1167	1.24
	1.8	1710	1365	1185	1.27
T5	0.8	1490	980	522	0.51
	0.9	1445	1010	538	0.52
	1.0	1395	1045	554	0.54
	1.1	1350	1070	568	0.55
	1.2	1300	1100	583	0.57
	1.3	1255	1130	597	0.59
	1.4	1190	1165	642	0.60
	1.5	1125	1190	657	0.62
	1.6	1060	1220	641	0.63
	1.7	1010	1245	653	0.65
	1.8	965	1270	666	0.66

DSG0603W / DSG0604W 90K HORIZONTAL

SPEED TAP	EXTERNAL STATIC PRESSURE (ESP) IN W. C.	AIRFLOW (CFM)	RPM	WATTS	BHP
T1' *	0.8	1285	930	413	0.37
	0.9	1235	965	428	0.38
	1.0	1180	1000	443	0.39
	1.1	1130	1030	455	0.40
	1.2	1080	1060	467	0.42
	1.3	1025	1090	478	0.43
	1.4	955	1130	537	0.44
	1.5	885	1160	552	0.46
	1.6	800	1195	521	0.47
	1.7	755	1215	530	0.48
	1.8	710	1240	540	0.49
T2'	0.8	2160	1150	1064	1.12
	0.9	2125	1175	1082	1.14
	1.0	2090	1195	1102	1.16
	1.1	2060	1220	1122	1.19
	1.2	2020	1245	1142	1.21
	1.3	1985	1265	1162	1.23
	1.4	1940	1285	1179	1.25
	1.5	1900	1310	1197	1.28
	1.6	1865	1330	1218	1.30
	1.7	1820	1350	1237	1.31
	1.8	1785	1375	1256	1.34
T3' **	0.8	1610	1010	600	0.60
	0.9	1570	1040	616	0.62
	1.0	1525	1070	632	0.64
	1.1	1480	1100	648	0.66
	1.2	1435	1125	664	0.67
	1.3	1390	1155	679	0.69
	1.4	1330	1185	717	0.71
	1.5	1275	1210	732	0.72
	1.6	1210	1240	725	0.74
	1.7	1165	1260	739	0.75
	1.8	1120	1285	752	0.77
T4'	0.8	-	-	-	-
	0.9	2490	1270	1534	1.60
	1.0	2460	1290	1555	1.62
	1.1	2430	1310	1578	1.65
	1.2	2400	1330	1599	1.67
	1.3	2365	1350	1620	1.70
	1.4	2325	1365	1637	1.72
	1.5	2295	1385	1659	1.74
	1.6	2260	1405	1685	1.77
	1.7	2230	1425	1708	1.79
	1.8	2190	1445	1731	1.82
T5'	0.8	-	-	-	-
	0.9	2490	1270	1534	1.60
	1.0	2460	1290	1555	1.62
	1.1	2430	1310	1578	1.65
	1.2	2400	1330	1599	1.67
	1.3	2365	1350	1620	1.70
	1.4	2325	1365	1637	1.72
	1.5	2295	1385	1659	1.74
	1.6	2260	1405	1685	1.77
	1.7	2230	1425	1708	1.79
	1.8	2190	1445	1731	1.82

* In DSG0363W / DSG0364W 45K, DSG0363W / DSG0364W 70K, DSG0363W / DSG0364W / DSG0367W 90K, DSG0483W / DSG0484W 70K, DSG0483W / DSG0484W 90K, DSG0483W / DSG0484W / DSG0487W 115K, DSG0603W / DSG0604W 90K, DSG0603W / DSG0604W 115K, AND DSG0603W / DSG0604W / DSG0607W 140K DOWNSHOT & HORIZONTAL Tables, T1 and T1' values are for fan mode only

** In DSG0363W / DSG0364W 45K, DSG0363W / DSG0364W 70K, DSG0363W / DSG0364W / DSG0367W 90K, DSG0483W / DSG0484W 70K, DSG0483W / DSG0484W 90K, DSG0483W / DSG0484W / DSG0487W 115K, DSG0603W / DSG0604W 90K, DSG0603W / DSG0604W 115K, AND DSG0603W / DSG0604W / DSG0607W 140K DOWNSHOT & HORIZONTAL Tables, T3 and T3' values are for heat mode only

DSG0603W / DSG0604W 115K DOWNSHOT

SPEED TAP	EXTERNAL STATIC PRESSURE (ESP) IN W. C.	AIRFLOW (CFM)	RPM	WATTS	BHP
T1 *	0.8	1290	990	458	0.42
	0.9	1245	1025	475	0.43
	1.0	1195	1065	489	0.45
	1.1	1140	1095	503	0.46
	1.2	1095	1125	517	0.47
	1.3	1045	1160	529	0.49
	1.4	980	1200	588	0.50
	1.5	910	1225	603	0.51
	1.6	835	1265	574	0.53
	1.7	785	1290	585	0.54
	1.8	745	1315	596	0.55
T2	0.8	1905	1160	918	0.97
	0.9	1870	1185	936	0.99
	1.0	1835	1210	956	1.01
	1.1	1800	1235	975	1.03
	1.2	1760	1265	995	1.05
	1.3	1720	1290	1015	1.07
	1.4	1675	1315	1038	1.09
	1.5	1630	1335	1055	1.11
	1.6	1585	1365	1068	1.14
	1.7	1545	1390	1087	1.16
	1.8	1505	1410	1105	1.17
T3 **	0.8	1510	1045	593	0.59
	0.9	1465	1080	609	0.61
	1.0	1420	1115	626	0.62
	1.1	1380	1140	642	0.64
	1.2	1335	1175	659	0.66
	1.3	1285	1200	674	0.67
	1.4	1230	1235	717	0.69
	1.5	1170	1265	733	0.71
	1.6	1105	1295	721	0.73
	1.7	1065	1320	735	0.74
	1.8	1020	1345	748	0.75
T4	0.8	2035	1195	1049	1.11
	0.9	2000	1215	1068	1.13
	1.0	1965	1240	1089	1.15
	1.1	1930	1270	1109	1.18
	1.2	1900	1295	1131	1.20
	1.3	1860	1315	1152	1.22
	1.4	1815	1340	1171	1.24
	1.5	1775	1365	1188	1.27
	1.6	1740	1390	1208	1.29
	1.7	1700	1410	1228	1.31
	1.8	1660	1435	1247	1.33
T5	0.8	1610	1075	665	0.68
	0.9	1575	1105	683	0.69
	1.0	1530	1135	701	0.71
	1.1	1490	1170	718	0.74
	1.2	1445	1195	735	0.75
	1.3	1400	1225	752	0.77
	1.4	1345	1260	788	0.79
	1.5	1290	1285	804	0.81
	1.6	1235	1310	800	0.82
	1.7	1190	1335	816	0.84
	1.8	1150	1365	831	0.86

DSG0603W / DSG0604W 115K DOWNSHOT

SPEED TAP	EXTERNAL STATIC PRESSURE (ESP) IN W. C.	AIRFLOW (CFM)	RPM	WATTS	BHP
T1' *	0.8	1400	1020	519	0.50
	0.9	1350	1055	536	0.51
	1.0	1305	1090	553	0.53
	1.1	1255	1115	566	0.54
	1.2	1215	1145	581	0.56
	1.3	1160	1180	595	0.57
	1.4	1100	1215	646	0.59
	1.5	1035	1240	662	0.60
	1.6	965	1280	642	0.62
	1.7	920	1305	654	0.64
	1.8	880	1330	666	0.65
T2'	0.8	2095	1210	1120	1.18
	0.9	2065	1235	1139	1.20
	1.0	2030	1260	1160	1.23
	1.1	2000	1285	1181	1.25
	1.2	1960	1310	1202	1.28
	1.3	1925	1330	1223	1.30
	1.4	1885	1355	1241	1.32
	1.5	1845	1380	1260	1.34
	1.6	1810	1400	1282	1.36
	1.7	1765	1420	1302	1.38
	1.8	1735	1445	1322	1.41
T3' **	0.8	1730	1105	757	0.78
	0.9	1690	1135	775	0.80
	1.0	1650	1170	793	0.83
	1.1	1610	1195	811	0.84
	1.2	1570	1220	829	0.86
	1.3	1525	1245	847	0.88
	1.4	1475	1280	878	0.90
	1.5	1425	1305	895	0.92
	1.6	1375	1330	898	0.94
	1.7	1330	1360	915	0.96
	1.8	1290	1380	931	0.98
T4'	0.8	2445	1315	1593	1.65
	0.9	2415	1335	1615	1.68
	1.0	2390	1360	1637	1.71
	1.1	2360	1380	1661	1.73
	1.2	2330	1400	1683	1.76
	1.3	2295	1420	1705	1.78
	1.4	2255	1435	1723	1.80
	1.5	2230	1460	1746	1.83
	1.6	2195	1480	1774	1.86
	1.7	2165	1500	1798	1.88
	1.8	2125	1500	1822	1.88
T5'	0.8	2445	1315	1593	1.65
	0.9	2415	1335	1615	1.68
	1.0	2390	1360	1637	1.71
	1.1	2360	1380	1661	1.73
	1.2	2330	1400	1683	1.76
	1.3	2295	1420	1705	1.78
	1.4	2255	1435	1723	1.80
	1.5	2230	1460	1746	1.83
	1.6	2195	1480	1774	1.86
	1.7	2165	1500	1798	1.88
	1.8	2125	1500	1822	1.88

* In DSG0363W / DSG0364W 45K, DSG0363W / DSG0364W 70K, DSG0363W / DSG0364W / DSG0367W 90K, DSG0483W / DSG0484W 70K, DSG0483W / DSG0484W 90K, DSG0483W / DSG0484W / DSG0487W 115K, DSG0603W / DSG0604W 90K, DSG0603W / DSG0604W 115K, AND DSG0603W / DSG0604W / DSG0607W 140K DOWNSHOT & HORIZONTAL Tables, T1 and T1' values are for fan mode only

** In DSG0363W / DSG0364W 45K, DSG0363W / DSG0364W 70K, DSG0363W / DSG0364W / DSG0367W 90K, DSG0483W / DSG0484W 70K, DSG0483W / DSG0484W 90K, DSG0483W / DSG0484W / DSG0487W 115K, DSG0603W / DSG0604W 90K, DSG0603W / DSG0604W 115K, AND DSG0603W / DSG0604W / DSG0607W 140K DOWNSHOT & HORIZONTAL Tables, T3 and T3' values are for heat mode only

DSG0603W / DSG0604W 115K HORIZONTAL

SPEED TAP	EXTERNAL STATIC PRESSURE (ESP) IN W. C.	AIRFLOW (CFM)	RPM	WATTS	BHP
T1 *	0.8	1330	940	435	0.39
	0.9	1280	975	451	0.41
	1.0	1230	1010	465	0.42
	1.1	1175	1040	478	0.44
	1.2	1130	1070	491	0.45
	1.3	1075	1100	503	0.46
	1.4	1010	1140	559	0.48
	1.5	935	1165	573	0.49
	1.6	860	1200	545	0.50
	1.7	810	1225	556	0.51
	1.8	765	1250	566	0.53
T2	0.8	1960	1100	872	0.92
	0.9	1925	1125	889	0.94
	1.0	1890	1150	908	0.96
	1.1	1855	1175	926	0.98
	1.2	1815	1200	945	1.00
	1.3	1770	1225	964	1.02
	1.4	1725	1250	986	1.04
	1.5	1680	1270	1002	1.06
	1.6	1635	1295	1015	1.08
	1.7	1590	1320	1033	1.10
	1.8	1550	1340	1050	1.12
T3 **	0.8	1555	995	563	0.56
	0.9	1510	1025	579	0.57
	1.0	1465	1060	595	0.59
	1.1	1420	1085	610	0.61
	1.2	1375	1115	626	0.62
	1.3	1325	1140	640	0.64
	1.4	1265	1175	681	0.66
	1.5	1205	1200	696	0.67
	1.6	1140	1230	685	0.69
	1.7	1095	1255	698	0.70
	1.8	1050	1280	711	0.72
T4	0.8	2095	1135	997	1.05
	0.9	2060	1155	1015	1.07
	1.0	2025	1180	1035	1.09
	1.1	1990	1205	1054	1.12
	1.2	1955	1230	1074	1.14
	1.3	1915	1250	1094	1.16
	1.4	1870	1275	1112	1.18
	1.5	1830	1295	1129	1.20
	1.6	1790	1320	1148	1.22
	1.7	1750	1340	1167	1.24
	1.8	1710	1365	1185	1.27
T5	0.8	1660	1020	632	0.64
	0.9	1620	1050	649	0.66
	1.0	1575	1080	666	0.68
	1.1	1535	1110	682	0.70
	1.2	1490	1135	698	0.71
	1.3	1440	1165	714	0.73
	1.4	1385	1195	749	0.75
	1.5	1330	1220	764	0.77
	1.6	1270	1245	760	0.78
	1.7	1225	1270	775	0.80
	1.8	1185	1295	789	0.81

DSG0603W / DSG0604W 115K HORIZONTAL

SPEED TAP	EXTERNAL STATIC PRESSURE (ESP) IN W. C.	AIRFLOW (CFM)	RPM	WATTS	BHP
T1' *	0.8	1440	970	493	0.47
	0.9	1390	1000	509	0.49
	1.0	1345	1035	525	0.50
	1.1	1295	1060	538	0.52
	1.2	1250	1090	552	0.53
	1.3	1195	1120	565	0.55
	1.4	1135	1155	614	0.56
	1.5	1065	1180	629	0.57
	1.6	995	1215	610	0.59
	1.7	950	1240	621	0.60
	1.8	905	1265	633	0.62
T2'	0.8	2160	1150	1064	1.12
	0.9	2125	1175	1082	1.14
	1.0	2090	1195	1102	1.16
	1.1	2060	1220	1122	1.19
	1.2	2020	1245	1142	1.21
	1.3	1985	1265	1162	1.23
	1.4	1940	1285	1179	1.25
	1.5	1900	1310	1197	1.28
	1.6	1865	1330	1218	1.30
	1.7	1820	1350	1237	1.31
	1.8	1785	1375	1256	1.34
T3' **	0.8	1780	1050	719	0.74
	0.9	1740	1080	736	0.76
	1.0	1700	1110	753	0.78
	1.1	1660	1135	770	0.80
	1.2	1615	1160	788	0.82
	1.3	1570	1185	805	0.84
	1.4	1520	1215	834	0.86
	1.5	1470	1240	850	0.88
	1.6	1415	1265	853	0.89
	1.7	1370	1290	869	0.91
	1.8	1330	1310	884	0.93
T4'	0.8	-	-	-	-
	0.9	2490	1270	1534	1.60
	1.0	2460	1290	1555	1.62
	1.1	2430	1310	1578	1.65
	1.2	2400	1330	1599	1.67
	1.3	2365	1350	1620	1.70
	1.4	2325	1365	1637	1.72
	1.5	2295	1385	1659	1.74
	1.6	2260	1405	1685	1.77
	1.7	2230	1425	1708	1.79
	1.8	2190	1445	1731	1.82
T5'	0.8	-	-	-	-
	0.9	2490	1270	1534	1.60
	1.0	2460	1290	1555	1.62
	1.1	2430	1310	1578	1.65
	1.2	2400	1330	1599	1.67
	1.3	2365	1350	1620	1.70
	1.4	2325	1365	1637	1.72
	1.5	2295	1385	1659	1.74
	1.6	2260	1405	1685	1.77
	1.7	2230	1425	1708	1.79
	1.8	2190	1445	1731	1.82

* In DSG0363W / DSG0364W 45K, DSG0363W / DSG0364W 70K, DSG0363W / DSG0364W / DSG0367W 90K, DSG0483W / DSG0484W 70K, DSG0483W / DSG0484W 90K, DSG0483W / DSG0484W / DSG0487W 115K, DSG0603W / DSG0604W 90K, DSG0603W / DSG0604W 115K, AND DSG0603W / DSG0604W / DSG0607W 140K DOWNSHOT & HORIZONTAL Tables, T1 and T1' values are for fan mode only

** In DSG0363W / DSG0364W 45K, DSG0363W / DSG0364W 70K, DSG0363W / DSG0364W / DSG0367W 90K, DSG0483W / DSG0484W 70K, DSG0483W / DSG0484W 90K, DSG0483W / DSG0484W / DSG0487W 115K, DSG0603W / DSG0604W 90K, DSG0603W / DSG0604W 115K, AND DSG0603W / DSG0604W / DSG0607W 140K DOWNSHOT & HORIZONTAL Tables, T3 and T3' values are for heat mode only

DSG0603W / DSG0604W / DSG0607W 140K DOWNSHOT

SPEED TAP	EXTERNAL STATIC PRESSURE (ESP) IN W. C.	AIRFLOW (CFM)	RPM	WATTS	BHP
T1 *	0.8	1510	1045	593	0.59
	0.9	1465	1080	609	0.61
	1.0	1420	1115	626	0.62
	1.1	1380	1140	642	0.64
	1.2	1335	1175	659	0.66
	1.3	1285	1200	674	0.67
	1.4	1230	1235	717	0.69
	1.5	1170	1265	733	0.71
	1.6	1105	1295	721	0.73
	1.7	1065	1320	735	0.74
	1.8	1020	1345	748	0.75
T2	0.8	1905	1160	918	0.97
	0.9	1870	1185	936	0.99
	1.0	1835	1210	956	1.01
	1.1	1800	1235	975	1.03
	1.2	1760	1265	995	1.05
	1.3	1720	1290	1015	1.07
	1.4	1675	1315	1038	1.09
	1.5	1630	1335	1055	1.11
	1.6	1585	1365	1068	1.14
	1.7	1545	1390	1087	1.16
	1.8	1505	1410	1105	1.17
T3 **	0.8	1945	1170	961	1.01
	0.9	1915	1195	979	1.03
	1.0	1880	1220	999	1.05
	1.1	1845	1245	1019	1.08
	1.2	1805	1275	1039	1.10
	1.3	1765	1300	1059	1.12
	1.4	1725	1320	1081	1.14
	1.5	1680	1345	1098	1.16
	1.6	1635	1375	1115	1.19
	1.7	1595	1395	1134	1.21
	1.8	1560	1420	1152	1.23
T4	0.8	2035	1195	1049	1.11
	0.9	2000	1215	1068	1.13
	1.0	1965	1240	1089	1.15
	1.1	1930	1270	1109	1.18
	1.2	1900	1295	1131	1.20
	1.3	1860	1315	1152	1.22
	1.4	1815	1340	1171	1.24
	1.5	1775	1365	1188	1.27
	1.6	1740	1390	1208	1.29
	1.7	1700	1410	1228	1.31
	1.8	1660	1435	1247	1.33
T5	0.8	2065	1200	1084	1.14
	0.9	2035	1225	1103	1.16
	1.0	2000	1255	1124	1.19
	1.1	1965	1280	1145	1.22
	1.2	1930	1300	1166	1.24
	1.3	1895	1325	1187	1.26
	1.4	1850	1345	1205	1.28
	1.5	1810	1375	1224	1.31
	1.6	1770	1395	1245	1.33
	1.7	1735	1415	1265	1.34
	1.8	1695	1440	1285	1.37

DSG0603W / DSG0604W / DSG0607W 140K DOWNSHOT

SPEED TAP	EXTERNAL STATIC PRESSURE (ESP) IN W. C.	AIRFLOW (CFM)	RPM	WATTS	BHP
T1' *	0.8	1730	1105	757	0.78
	0.9	1690	1135	775	0.80
	1.0	1650	1170	793	0.83
	1.1	1610	1195	811	0.84
	1.2	1570	1220	829	0.86
	1.3	1525	1245	847	0.88
	1.4	1475	1280	878	0.90
	1.5	1425	1305	895	0.92
	1.6	1375	1330	898	0.94
	1.7	1330	1360	915	0.96
	1.8	1290	1380	931	0.98
T2'	0.8	2095	1210	1120	1.18
	0.9	2065	1235	1139	1.20
	1.0	2030	1260	1160	1.23
	1.1	2000	1285	1181	1.25
	1.2	1960	1310	1202	1.28
	1.3	1925	1330	1223	1.30
	1.4	1885	1355	1241	1.32
	1.5	1845	1380	1260	1.34
	1.6	1810	1400	1282	1.36
	1.7	1765	1420	1302	1.38
	1.8	1735	1445	1322	1.41
T3' **	0.8	2145	1225	1180	1.24
	0.9	2115	1245	1200	1.26
	1.0	2085	1275	1220	1.29
	1.1	2055	1300	1242	1.32
	1.2	2020	1320	1264	1.34
	1.3	1980	1340	1285	1.36
	1.4	1935	1365	1302	1.38
	1.5	1905	1390	1321	1.41
	1.6	1870	1410	1345	1.43
	1.7	1830	1430	1366	1.45
	1.8	1790	1460	1386	1.48
T4'	0.8	2445	1315	1593	1.65
	0.9	2415	1335	1615	1.68
	1.0	2390	1360	1637	1.71
	1.1	2360	1380	1661	1.73
	1.2	2330	1400	1683	1.76
	1.3	2295	1420	1705	1.78
	1.4	2255	1435	1723	1.80
	1.5	2230	1460	1746	1.83
	1.6	2195	1480	1774	1.86
	1.7	2165	1500	1798	1.88
	1.8	2125	1500	1822	1.88
T5'	0.8	2445	1315	1593	1.65
	0.9	2415	1335	1615	1.68
	1.0	2390	1360	1637	1.71
	1.1	2360	1380	1661	1.73
	1.2	2330	1400	1683	1.76
	1.3	2295	1420	1705	1.78
	1.4	2255	1435	1723	1.80
	1.5	2230	1460	1746	1.83
	1.6	2195	1480	1774	1.86
	1.7	2165	1500	1798	1.88
	1.8	2125	1500	1822	1.88

* In DSG0363W / DSG0364W 45K, DSG0363W / DSG0364W 70K, DSG0363W / DSG0364W / DSG0367W 90K, DSG0483W / DSG0484W 70K, DSG0483W / DSG0484W 90K, DSG0483W / DSG0484W / DSG0487W 115K, DSG0603W / DSG0604W 90K, DSG0603W / DSG0604W 115K, AND DSG0603W / DSG0604W / DSG0607W 140K DOWNSHOT & HORIZONTAL Tables, T1 and T1' values are for fan mode only

** In DSG0363W / DSG0364W 45K, DSG0363W / DSG0364W 70K, DSG0363W / DSG0364W / DSG0367W 90K, DSG0483W / DSG0484W 70K, DSG0483W / DSG0484W 90K, DSG0483W / DSG0484W / DSG0487W 115K, DSG0603W / DSG0604W 90K, DSG0603W / DSG0604W 115K, AND DSG0603W / DSG0604W / DSG0607W 140K DOWNSHOT & HORIZONTAL Tables, T3 and T3' values are for heat mode only

DSG0603W / DSG0604W / DSG0607W 140K HORIZONTAL

SPEED TAP	EXTERNAL STATIC PRESSURE (ESP) IN W. C.	AIRFLOW (CFM)	RPM	WATTS	BHP
T1 *	0.8	1555	995	563	0.56
	0.9	1510	1025	579	0.57
	1.0	1465	1060	595	0.59
	1.1	1420	1085	610	0.61
	1.2	1375	1115	626	0.62
	1.3	1325	1140	640	0.64
	1.4	1265	1175	681	0.66
	1.5	1205	1200	696	0.67
	1.6	1140	1230	685	0.69
	1.7	1095	1255	698	0.70
	1.8	1050	1280	711	0.72
T2	0.8	1960	1100	872	0.92
	0.9	1925	1125	889	0.94
	1.0	1890	1150	908	0.96
	1.1	1855	1175	926	0.98
	1.2	1815	1200	945	1.00
	1.3	1770	1225	964	1.02
	1.4	1725	1250	986	1.04
	1.5	1680	1270	1002	1.06
	1.6	1635	1295	1015	1.08
	1.7	1590	1320	1033	1.10
	1.8	1550	1340	1050	1.12
T3 **	0.8	2005	1110	913	0.96
	0.9	1970	1135	930	0.98
	1.0	1935	1160	949	1.00
	1.1	1900	1185	968	1.02
	1.2	1860	1210	987	1.05
	1.3	1820	1235	1006	1.07
	1.4	1775	1255	1027	1.08
	1.5	1730	1280	1043	1.11
	1.6	1685	1305	1059	1.13
	1.7	1645	1325	1077	1.14
	1.8	1605	1350	1094	1.17
T4	0.8	2095	1135	997	1.05
	0.9	2060	1155	1015	1.07
	1.0	2025	1180	1035	1.09
	1.1	1990	1205	1054	1.12
	1.2	1955	1230	1074	1.14
	1.3	1915	1250	1094	1.16
	1.4	1870	1275	1112	1.18
	1.5	1830	1295	1129	1.20
	1.6	1790	1320	1148	1.22
	1.7	1750	1340	1167	1.24
	1.8	1710	1365	1185	1.27
T5	0.8	2125	1140	1030	1.08
	0.9	2095	1165	1048	1.11
	1.0	2060	1190	1068	1.13
	1.1	2025	1215	1088	1.15
	1.2	1990	1235	1108	1.17
	1.3	1950	1260	1128	1.20
	1.4	1905	1280	1145	1.22
	1.5	1865	1305	1163	1.24
	1.6	1825	1325	1183	1.26
	1.7	1785	1345	1202	1.28
	1.8	1745	1370	1221	1.30

DSG0603W / DSG0604W / DSG0607W 140K HORIZONTAL

SPEED TAP	EXTERNAL STATIC PRESSURE (ESP) IN W. C.	AIRFLOW (CFM)	RPM	WATTS	BHP
T1' *	0.8	1780	1050	719	0.74
	0.9	1740	1080	736	0.76
	1.0	1700	1110	753	0.78
	1.1	1660	1135	770	0.80
	1.2	1615	1160	788	0.82
	1.3	1570	1185	805	0.84
	1.4	1520	1215	834	0.86
	1.5	1470	1240	850	0.88
	1.6	1415	1265	853	0.89
	1.7	1370	1290	869	0.91
	1.8	1330	1310	884	0.93
T2'	0.8	2160	1150	1064	1.12
	0.9	2125	1175	1082	1.14
	1.0	2090	1195	1102	1.16
	1.1	2060	1220	1122	1.19
	1.2	2020	1245	1142	1.21
	1.3	1985	1265	1162	1.23
	1.4	1940	1285	1179	1.25
	1.5	1900	1310	1197	1.28
	1.6	1865	1330	1218	1.30
	1.7	1820	1350	1237	1.31
	1.8	1785	1375	1256	1.34
T3' **	0.8	2210	1165	1121	1.18
	0.9	2180	1185	1140	1.20
	1.0	2145	1210	1159	1.23
	1.1	2115	1235	1180	1.25
	1.2	2080	1255	1201	1.27
	1.3	2040	1275	1221	1.29
	1.4	1995	1295	1237	1.31
	1.5	1960	1320	1255	1.34
	1.6	1925	1340	1278	1.36
	1.7	1885	1360	1298	1.38
	1.8	1845	1385	1317	1.40
T4'	0.8	-	1.8	-	2.8
	0.9	2490	1270	1534	1.60
	1.0	2460	1290	1555	1.62
	1.1	2430	1310	1578	1.65
	1.2	2400	1330	1599	1.67
	1.3	2365	1350	1620	1.70
	1.4	2325	1365	1637	1.72
	1.5	2295	1385	1659	1.74
	1.6	2260	1405	1685	1.77
	1.7	2230	1425	1708	1.79
	1.8	2190	1445	1731	1.82
T5'	0.8	-	-	-	-
	0.9	2490	1270	1534	1.60
	1.0	2460	1290	1555	1.62
	1.1	2430	1310	1578	1.65
	1.2	2400	1330	1599	1.67
	1.3	2365	1350	1620	1.70
	1.4	2325	1365	1637	1.72
	1.5	2295	1385	1659	1.74
	1.6	2260	1405	1685	1.77
	1.7	2230	1425	1708	1.79
	1.8	2190	1445	1731	1.82

* In DSG0363W / DSG0364W 45K, DSG0363W / DSG0364W 70K, DSG0363W / DSG0364W / DSG0367W 90K, DSG0483W / DSG0484W 70K, DSG0483W / DSG0484W 90K, DSG0483W / DSG0484W / DSG0487W 115K, DSG0603W / DSG0604W 90K, DSG0603W / DSG0604W 115K, AND DSG0603W / DSG0604W / DSG0607W 140K DOWNSHOT & HORIZONTAL Tables, T1 and T1' values are for fan mode only

** In DSG0363W / DSG0364W 45K, DSG0363W / DSG0364W 70K, DSG0363W / DSG0364W / DSG0367W 90K, DSG0483W / DSG0484W 70K, DSG0483W / DSG0484W 90K, DSG0483W / DSG0484W / DSG0487W 115K, DSG0603W / DSG0604W 90K, DSG0603W / DSG0604W 115K, AND DSG0603W / DSG0604W / DSG0607W 140K DOWNSHOT & HORIZONTAL Tables, T3 and T3' values are for heat mode only

DSG0723W / DSG0724W / DSG0727W 90K DOWNSHOT

SPEED TAP	EXTERNAL STATIC PRESSURE (ESP) IN W. C.	AIRFLOW (CFM)	RPM	WATTS	BHP
T1 ***	0.6	1375	890	419	0.37
	0.7	1330	915	427	0.38
	0.8	1290	945	439	0.40
	0.9	1230	975	451	0.41
	1.0	1185	1010	465	0.42
	1.1	1135	1040	479	0.44
	1.2	1080	1075	496	0.45
	1.3	1025	1110	511	0.47
	1.4	975	1140	522	0.48
	1.5	965	1170	588	0.49
	1.6	910	1200	596	0.50
	1.7	850	1225	610	0.51
	1.8	765	1255	568	0.53
T2 ***	0.6	1940	1050	780	0.81
	0.7	1895	1075	800	0.83
	0.8	1855	1100	816	0.85
	0.9	1820	1125	832	0.87
	1.0	1785	1145	847	0.88
	1.1	1750	1170	862	0.90
	1.2	1705	1195	878	0.92
	1.3	1665	1220	894	0.94
	1.4	1620	1240	911	0.95
	1.5	1585	1265	935	0.97
	1.6	1540	1290	953	0.99
	1.7	1495	1310	968	1.01
	1.8	1440	1330	980	1.02
T3 ****	0.6	1675	975	589	0.59
	0.7	1635	1000	604	0.60
	0.8	1595	1025	619	0.62
	0.9	1545	1055	632	0.63
	1.0	1505	1080	646	0.65
	1.1	1465	1110	661	0.67
	1.2	1420	1135	677	0.68
	1.3	1370	1165	692	0.70
	1.4	1325	1190	706	0.72
	1.5	1295	1220	747	0.73
	1.6	1250	1245	761	0.75
	1.7	1195	1265	775	0.76
	1.8	1130	1290	765	0.78
T4	0.6	2690	1260	1639	1.68
	0.7	2650	1285	1665	1.72
	0.8	2615	1305	1689	1.74
	0.9	2580	1325	1712	1.77
	1.0	2545	1345	1738	1.80
	1.1	2510	1365	1760	1.82
	1.2	2475	1385	1783	1.85
	1.3	2450	1400	1804	1.87
	1.4	2415	1415	1826	1.89
	1.5	2380	1435	1841	1.92
	1.6	2345	1455	1863	1.94
	1.7	2315	1475	1882	1.97
	1.8	2280	1495	1912	2.00
T5	0.6	1795	1005	670	0.68
	0.7	1750	1035	687	0.70
	0.8	1710	1060	702	0.72
	0.9	1670	1085	717	0.73
	1.0	1630	1110	732	0.75
	1.1	1595	1135	746	0.77
	1.2	1550	1160	762	0.78
	1.3	1505	1190	777	0.80
	1.4	1455	1215	793	0.82
	1.5	1425	1240	825	0.84
	1.6	1380	1265	841	0.85
	1.7	1330	1285	856	0.87
	1.8	-	-	-	-

DSG0723W / DSG0724W / DSG0727W 90K DOWNSHOT

SPEED TAP	EXTERNAL STATIC PRESSURE (ESP) IN W. C.	AIRFLOW (CFM)	RPM	WATTS	BHP
T1′ ***	0.6	1630	960	561	0.55
	0.7	1590	985	575	0.56
	0.8	1550	1015	589	0.58
	0.9	1500	1045	602	0.60
	1.0	1460	1070	617	0.61
	1.1	1420	1100	631	0.63
	1.2	1370	1125	647	0.65
	1.3	1320	1155	662	0.66
	1.4	1270	1185	676	0.68
	1.5	1250	1210	720	0.69
	1.6	1200	1240	733	0.71
	1.7	1145	1260	747	0.72
	1.8	1075	1285	733	0.74
T2′ ***	0.6	2100	1095	921	0.96
	0.7	2060	1120	943	0.99
	0.8	2020	1145	960	1.01
	0.9	1985	1165	977	1.02
	1.0	1950	1185	994	1.04
	1.1	1920	1210	1010	1.06
	1.2	1880	1230	1026	1.08
	1.3	1840	1255	1043	1.10
	1.4	1800	1275	1061	1.12
	1.5	1760	1295	1078	1.14
	1.6	1720	1320	1097	1.16
	1.7	1675	1340	1114	1.18
	1.8	1630	1360	1136	1.20
T3′ ****	0.6	1875	1030	729	0.75
	0.7	1830	1055	747	0.77
	0.8	1790	1080	763	0.78
	0.9	1750	1105	778	0.80
	1.0	1715	1130	793	0.82
	1.1	1680	1155	808	0.84
	1.2	1635	1180	824	0.86
	1.3	1590	1205	839	0.88
	1.4	1545	1230	856	0.89
	1.5	1515	1255	883	0.91
	1.6	1470	1275	900	0.93
	1.7	1420	1300	915	0.94
	1.8	1365	1320	923	0.96
T4′	0.6	2775	1290	1785	1.82
	0.7	2740	1310	1811	1.85
	0.8	2700	1330	1836	1.88
	0.9	2665	1350	1861	1.91
	1.0	2630	1370	1888	1.94
	1.1	2595	1390	1912	1.97
	1.2	2560	1410	1936	1.99
	1.3	2535	1425	1959	2.01
	1.4	2500	1440	1981	2.04
	1.5	2470	1460	2001	2.06
	1.6	2435	1480	2022	2.09
	1.7	2405	1500	2042	2.12
	1.8	2370	1500	2064	2.12
T5′	0.6	2010	1070	839	0.87
	0.7	1965	1095	859	0.89
	0.8	1930	1120	877	0.91
	0.9	1890	1140	893	0.93
	1.0	1855	1165	909	0.95
	1.1	1825	1185	924	0.97
	1.2	1780	1210	940	0.99
	1.3	1740	1235	956	1.01
	1.4	1695	1255	974	1.03
	1.5	1660	1280	994	1.05
	1.6	1620	1300	1013	1.06
	1.7	1575	1320	1029	1.08
	1.8	1525	1345	1046	1.10

*** In DSG0723D / DSG0724D / DSG0727D 90K, 115K, & 140K DOWNSHOT & HORIZONTAL Tables, T1 and T2 values are for part load only

**** In DSG0723D / DSG0724D / DSG0727D 90K, 115K, & 140K DOWNSHOT & HORIZONTAL Tables, T3 values are for high heat mode only

DSG0723W / DSG0724W / DSG0727W 90K HORIZONTAL

SPEED TAP	EXTERNAL STATIC PRESSURE (ESP) IN W. C.	AIRFLOW (CFM)	RPM	WATTS	BHP
T1 ***	0.6	1415	855	404	0.36
	0.7	1370	880	412	0.37
	0.8	1330	905	424	0.38
	0.9	1265	935	435	0.39
	1.0	1220	970	449	0.41
	1.1	1170	1000	462	0.42
	1.2	1110	1030	479	0.43
	1.3	1055	1065	493	0.45
	1.4	1005	1095	504	0.46
	1.5	995	1125	567	0.47
	1.6	935	1150	575	0.48
	1.7	875	1175	589	0.49
	1.8	790	1205	548	0.51
T2 ***	0.6	2000	1010	753	0.78
	0.7	1950	1030	772	0.79
	0.8	1910	1055	787	0.81
	0.9	1875	1080	803	0.83
	1.0	1840	1100	817	0.85
	1.1	1805	1125	832	0.87
	1.2	1755	1145	847	0.88
	1.3	1715	1170	863	0.90
	1.4	1670	1190	879	0.92
	1.5	1635	1215	902	0.94
	1.6	1585	1240	920	0.95
	1.7	1540	1260	934	0.97
	1.8	1485	1275	946	0.98
T3 ****	0.6	1725	935	568	0.56
	0.7	1685	960	583	0.58
	0.8	1645	985	597	0.59
	0.9	1590	1015	610	0.61
	1.0	1550	1035	623	0.62
	1.1	1510	1065	638	0.64
	1.2	1465	1090	653	0.65
	1.3	1410	1120	668	0.67
	1.4	1365	1140	681	0.68
	1.5	1335	1170	721	0.70
	1.6	1290	1195	734	0.72
	1.7	1230	1215	748	0.73
	1.8	1165	1240	738	0.75
T4	0.6	2770	1210	1582	1.62
	0.7	2730	1235	1607	1.65
	0.8	2695	1255	1630	1.68
	0.9	2655	1270	1652	1.70
	1.0	2620	1290	1677	1.72
	1.1	2585	1310	1698	1.75
	1.2	2550	1330	1721	1.78
	1.3	2525	1345	1741	1.80
	1.4	2485	1360	1762	1.82
	1.5	2450	1380	1777	1.84
	1.6	2415	1395	1798	1.86
	1.7	2385	1415	1816	1.89
	1.8	2350	1435	1845	1.92
T5	0.6	1850	965	647	0.65
	0.7	1805	995	663	0.67
	0.8	1760	1020	677	0.69
	0.9	1720	1040	692	0.70
	1.0	1680	1065	706	0.72
	1.1	1645	1090	720	0.74
	1.2	1595	1115	735	0.75
	1.3	1550	1140	750	0.77
	1.4	1500	1165	765	0.79
	1.5	1470	1190	796	0.80
	1.6	1420	1215	812	0.82
	1.7	1370	1235	826	0.83
	1.8	1310	1260	827	0.85

DSG0723W / DSG0724W / DSG0727W 90K HORIZONTAL

SPEED TAP	EXTERNAL STATIC PRESSURE (ESP) IN W. C.	AIRFLOW (CFM)	RPM	WATTS	BHP
T1' ***	0.6	1680	920	541	0.53
	0.7	1640	945	555	0.54
	0.8	1595	975	568	0.56
	0.9	1545	1005	581	0.58
	1.0	1505	1025	595	0.59
	1.1	1465	1055	609	0.60
	1.2	1410	1080	624	0.62
	1.3	1360	1110	639	0.64
	1.4	1310	1140	652	0.65
	1.5	1290	1160	695	0.67
	1.6	1235	1190	707	0.68
	1.7	1180	1210	721	0.69
	1.8	1105	1235	707	0.71
T2' ***	0.6	2165	1050	889	0.92
	0.7	2120	1075	910	0.95
	0.8	2080	1100	926	0.97
	0.9	2045	1120	943	0.99
	1.0	2010	1140	959	1.00
	1.1	1980	1160	975	1.02
	1.2	1935	1180	990	1.04
	1.3	1895	1205	1006	1.06
	1.4	1855	1225	1024	1.08
	1.5	1815	1245	1040	1.10
	1.6	1770	1265	1059	1.11
	1.7	1725	1285	1075	1.13
	1.8	1680	1305	1096	1.15
T3' ****	0.6	1930	990	703	0.72
	0.7	1885	1015	721	0.74
	0.8	1845	1035	736	0.75
	0.9	1805	1060	751	0.77
	1.0	1765	1085	765	0.79
	1.1	1730	1110	780	0.81
	1.2	1685	1135	795	0.82
	1.3	1640	1155	810	0.84
	1.4	1590	1180	826	0.86
	1.5	1560	1205	852	0.88
	1.6	1515	1225	869	0.89
	1.7	1465	1250	883	0.91
	1.8	1405	1265	891	0.92
T4'	0.6	2860	1240	1723	1.75
	0.7	2820	1260	1748	1.78
	0.8	2780	1275	1772	1.80
	0.9	2745	1295	1796	1.83
	1.0	2710	1315	1822	1.86
	1.1	2675	1335	1845	1.89
	1.2	2635	1355	1868	1.92
	1.3	2610	1370	1890	1.94
	1.4	2575	1380	1912	1.95
	1.5	2545	1400	1931	1.98
	1.6	2510	1420	1951	2.01
	1.7	2475	1440	1971	2.04
	1.8	2440	1440	1992	2.04
T5'	0.6	2070	1025	810	0.84
	0.7	2025	1050	829	0.86
	0.8	1990	1075	846	0.88
	0.9	1945	1095	862	0.89
	1.0	1910	1120	877	0.91
	1.1	1880	1140	892	0.93
	1.2	1835	1160	907	0.95
	1.3	1790	1185	923	0.97
	1.4	1745	1205	940	0.98
	1.5	1710	1230	959	1.00
	1.6	1670	1250	978	1.02
	1.7	1620	1265	993	1.03
	1.8	1570	1290	1009	1.05

*** In DSG0723D / DSG0724D / DSG0727D 90K, 115K, & 140K DOWNSHOT & HORIZONTAL Tables, T1 and T2 values are for part load only
**** In DSG0723D / DSG0724D / DSG0727D 90K, 115K, & 140K DOWNSHOT & HORIZONTAL Tables, T3 values are for high heat mode only

DSG0723W / DSG0724W / DSG0727W 115K DOWNSHOT

SPEED TAP	EXTERNAL STATIC PRESSURE (ESP) IN W. C.	AIRFLOW (CFM)	RPM	WATTS	BHP
T1 ***	0.6	1610	955	549	0.54
	0.7	1570	980	563	0.55
	0.8	1530	1010	577	0.57
	0.9	1480	1040	590	0.58
	1.0	1440	1065	604	0.60
	1.1	1395	1095	618	0.61
	1.2	1345	1125	634	0.63
	1.3	1295	1150	649	0.65
	1.4	1250	1180	663	0.66
	1.5	1225	1210	709	0.68
	1.6	1175	1235	722	0.69
	1.7	1125	1260	736	0.71
	1.8	1055	1285	720	0.72
T2 ***	0.6	1940	1050	780	0.81
	0.7	1895	1075	800	0.83
	0.8	1855	1100	816	0.85
	0.9	1820	1125	832	0.87
	1.0	1785	1145	847	0.88
	1.1	1750	1170	862	0.90
	1.2	1705	1195	878	0.92
	1.3	1665	1220	894	0.94
	1.4	1620	1240	911	0.95
	1.5	1585	1265	935	0.97
	1.6	1540	1290	953	0.99
	1.7	1495	1310	968	1.01
	1.8	1440	1330	980	1.02
T3 ****	0.6	2105	1095	926	0.97
	0.7	2065	1120	948	0.99
	0.8	2025	1145	966	1.01
	0.9	1990	1165	983	1.03
	1.0	1960	1190	1000	1.05
	1.1	1925	1210	1016	1.07
	1.2	1885	1235	1032	1.09
	1.3	1850	1255	1049	1.11
	1.4	1805	1275	1067	1.13
	1.5	1765	1300	1083	1.15
	1.6	1725	1320	1103	1.17
	1.7	1680	1340	1119	1.18
	1.8	1635	1360	1142	1.20
T4	0.6	2690	1260	1639	1.68
	0.7	2650	1285	1665	1.72
	0.8	2615	1305	1689	1.74
	0.9	2580	1325	1712	1.77
	1.0	2545	1345	1738	1.80
	1.1	2510	1365	1760	1.82
	1.2	2475	1385	1783	1.85
	1.3	2450	1400	1804	1.87
	1.4	2415	1415	1826	1.89
	1.5	2380	1435	1841	1.92
	1.6	2345	1455	1863	1.94
	1.7	2315	1475	1882	1.97
	1.8	2280	1495	1912	2.00
T5	0.6	2210	1125	1029	1.08
	0.7	2170	1150	1052	1.10
	0.8	2130	1175	1071	1.13
	0.9	2100	1195	1089	1.15
	1.0	2065	1215	1107	1.16
	1.1	2035	1235	1123	1.18
	1.2	1995	1260	1140	1.21
	1.3	1960	1280	1158	1.23
	1.4	1920	1300	1177	1.25
	1.5	1880	1320	1190	1.26
	1.6	1840	1340	1210	1.28
	1.7	1800	1360	1227	1.30
	1.8	-	-	-	-

DSG0723W / DSG0724W / DSG0727W 115K DOWNSHOT

SPEED TAP	EXTERNAL STATIC PRESSURE (ESP) IN W. C.	AIRFLOW (CFM)	RPM	WATTS	BHP
T1' ***	0.6	1845	1020	706	0.72
	0.7	1800	1045	724	0.74
	0.8	1760	1075	739	0.76
	0.9	1720	1100	754	0.78
	1.0	1685	1120	769	0.79
	1.1	1645	1145	784	0.81
	1.2	1600	1175	800	0.83
	1.3	1560	1200	815	0.85
	1.4	1510	1225	831	0.87
	1.5	1480	1250	861	0.88
	1.6	1435	1270	877	0.90
	1.7	1385	1295	892	0.92
	1.8	1330	1315	897	0.93
T2' ***	0.6	2100	1095	921	0.96
	0.7	2060	1120	943	0.99
	0.8	2020	1145	960	1.01
	0.9	1985	1165	977	1.02
	1.0	1950	1185	994	1.04
	1.1	1920	1210	1010	1.06
	1.2	1880	1230	1026	1.08
	1.3	1840	1255	1043	1.10
	1.4	1800	1275	1061	1.12
	1.5	1760	1295	1078	1.14
	1.6	1720	1320	1097	1.16
	1.7	1675	1340	1114	1.18
	1.8	1630	1360	1136	1.20
T3' ****	0.6	2285	1145	1109	1.16
	0.7	2245	1170	1133	1.19
	0.8	2205	1195	1152	1.21
	0.9	2175	1215	1171	1.23
	1.0	2145	1235	1190	1.25
	1.1	2110	1255	1207	1.27
	1.2	2075	1275	1224	1.29
	1.3	2040	1295	1242	1.31
	1.4	2000	1315	1261	1.33
	1.5	1960	1335	1273	1.35
	1.6	1920	1355	1294	1.37
	1.7	1880	1375	1311	1.39
	1.8	1840	1395	1341	1.41
T4'	0.6	2775	1290	1785	1.82
	0.7	2740	1310	1811	1.85
	0.8	2700	1330	1836	1.88
	0.9	2665	1350	1861	1.91
	1.0	2630	1370	1888	1.94
	1.1	2595	1390	1912	1.97
	1.2	2560	1410	1936	1.99
	1.3	2535	1425	1959	2.01
	1.4	2500	1440	1981	2.04
	1.5	2470	1460	2001	2.06
	1.6	2435	1480	2022	2.09
	1.7	2405	1500	2042	2.12
	1.8	2370	1500	2064	2.12
T5'	0.6	2390	1175	1228	1.28
	0.7	2350	1200	1253	1.31
	0.8	2310	1225	1273	1.34
	0.9	2280	1245	1293	1.36
	1.0	2250	1265	1314	1.38
	1.1	2220	1280	1331	1.40
	1.2	2180	1300	1350	1.42
	1.3	2150	1320	1368	1.44
	1.4	2110	1340	1389	1.46
	1.5	2070	1360	1399	1.48
	1.6	2035	1380	1420	1.51
	1.7	1995	1400	1438	1.53
	1.8	1960	1420	1471	1.55

*** In DSG0723D / DSG0724D / DSG0727D 90K, 115K, & 140K DOWNSHOT & HORIZONTAL Tables, T1 and T2 values are for part load only

**** In DSG0723D / DSG0724D / DSG0727D 90K, 115K, & 140K DOWNSHOT & HORIZONTAL Tables, T3 values are for high heat mode only

DSG0723W / DSG0724W / DSG0727W 115K HORIZONTAL

SPEED TAP	EXTERNAL STATIC PRESSURE (ESP) IN W. C.	AIRFLOW (CFM)	RPM	WATTS	BHP
T1 ***	0.6	1660	915	530	0.51
	0.7	1615	940	543	0.53
	0.8	1575	970	557	0.54
	0.9	1525	1000	569	0.56
	1.0	1485	1020	583	0.57
	1.1	1435	1050	596	0.59
	1.2	1385	1080	612	0.61
	1.3	1335	1105	626	0.62
	1.4	1290	1135	640	0.64
	1.5	1260	1160	684	0.65
	1.6	1210	1185	697	0.67
	1.7	1160	1210	710	0.68
	1.8	1085	1235	695	0.69
T2 ***	0.6	2000	1010	753	0.78
	0.7	1950	1030	772	0.79
	0.8	1910	1055	787	0.81
	0.9	1875	1080	803	0.83
	1.0	1840	1100	817	0.85
	1.1	1805	1125	832	0.87
	1.2	1755	1145	847	0.88
	1.3	1715	1170	863	0.90
	1.4	1670	1190	879	0.92
	1.5	1635	1215	902	0.94
	1.6	1585	1240	920	0.95
	1.7	1540	1260	934	0.97
	1.8	1485	1275	946	0.98
T3 ****	0.6	2170	1050	894	0.93
	0.7	2125	1075	915	0.95
	0.8	2085	1100	932	0.97
	0.9	2050	1120	949	0.99
	1.0	2020	1140	965	1.01
	1.1	1985	1160	980	1.02
	1.2	1940	1185	996	1.05
	1.3	1905	1205	1012	1.06
	1.4	1860	1225	1030	1.08
	1.5	1820	1250	1045	1.10
	1.6	1775	1265	1064	1.12
	1.7	1730	1285	1080	1.14
	1.8	1685	1305	1102	1.15
T4	0.6	2770	1210	1582	1.62
	0.7	2730	1235	1607	1.65
	0.8	2695	1255	1630	1.68
	0.9	2655	1270	1652	1.70
	1.0	2620	1290	1677	1.72
	1.1	2585	1310	1698	1.75
	1.2	2550	1330	1721	1.78
	1.3	2525	1345	1741	1.80
	1.4	2485	1360	1762	1.82
	1.5	2450	1380	1777	1.84
	1.6	2415	1395	1798	1.86
	1.7	2385	1415	1816	1.89
	1.8	2350	1435	1845	1.92
T5	0.6	2275	1080	993	1.03
	0.7	2235	1105	1015	1.06
	0.8	2195	1130	1034	1.08
	0.9	2165	1145	1051	1.10
	1.0	2125	1165	1068	1.12
	1.1	2095	1185	1084	1.14
	1.2	2055	1210	1100	1.16
	1.3	2020	1230	1117	1.18
	1.4	1980	1250	1136	1.20
	1.5	1935	1265	1148	1.21
	1.6	1895	1285	1168	1.23
	1.7	1855	1305	1184	1.25
	1.8	1810	1325	1211	1.27

DSG0723W / DSG0724W / DSG0727W 115K HORIZONTAL

SPEED TAP	EXTERNAL STATIC PRESSURE (ESP) IN W. C.	AIRFLOW (CFM)	RPM	WATTS	BHP
T1′ ***	0.6	1900	980	681	0.69
	0.7	1855	1005	699	0.71
	0.8	1815	1030	713	0.73
	0.9	1770	1055	728	0.75
	1.0	1735	1075	742	0.76
	1.1	1695	1100	757	0.78
	1.2	1650	1130	772	0.80
	1.3	1605	1150	786	0.81
	1.4	1555	1175	802	0.83
	1.5	1525	1200	831	0.85
	1.6	1480	1220	846	0.86
	1.7	1425	1245	861	0.88
	1.8	1370	1260	866	0.89
T2′ ***	0.6	2165	1050	889	0.92
	0.7	2120	1075	910	0.95
	0.8	2080	1100	926	0.97
	0.9	2045	1120	943	0.99
	1.0	2010	1140	959	1.00
	1.1	1980	1160	975	1.02
	1.2	1935	1180	990	1.04
	1.3	1895	1205	1006	1.06
	1.4	1855	1225	1024	1.08
	1.5	1815	1245	1040	1.10
	1.6	1770	1265	1059	1.11
	1.7	1725	1285	1075	1.13
	1.8	1680	1305	1096	1.15
T3′ ****	0.6	2355	1100	1070	1.11
	0.7	2310	1125	1093	1.14
	0.8	2270	1145	1112	1.16
	0.9	2240	1165	1130	1.18
	1.0	2210	1185	1148	1.20
	1.1	2175	1205	1165	1.22
	1.2	2135	1225	1181	1.24
	1.3	2100	1245	1199	1.26
	1.4	2060	1260	1217	1.28
	1.5	2020	1280	1228	1.30
	1.6	1980	1300	1249	1.32
	1.7	1935	1320	1265	1.34
	1.8	1895	1340	1294	1.36
T4′	0.6	2860	1240	1723	1.75
	0.7	2820	1260	1748	1.78
	0.8	2780	1275	1772	1.80
	0.9	2745	1295	1796	1.83
	1.0	2710	1315	1822	1.86
	1.1	2675	1335	1845	1.89
	1.2	2635	1355	1868	1.92
	1.3	2610	1370	1890	1.94
	1.4	2575	1380	1912	1.95
	1.5	2545	1400	1931	1.98
	1.6	2510	1420	1951	2.01
	1.7	2475	1440	1971	2.04
	1.8	2440	1440	1992	2.04
T5′	0.6	2460	1130	1185	1.23
	0.7	2420	1150	1209	1.26
	0.8	2380	1175	1228	1.28
	0.9	2350	1195	1248	1.30
	1.0	2320	1215	1268	1.33
	1.1	2285	1230	1284	1.34
	1.2	2245	1250	1303	1.36
	1.3	2215	1265	1320	1.38
	1.4	2175	1285	1340	1.40
	1.5	2130	1305	1350	1.42
	1.6	2095	1325	1370	1.45
	1.7	2055	1345	1388	1.47
	1.8	2020	1365	1420	1.49

*** In DSG0723D / DSG0724D / DSG0727D 90K, 115K, & 140K DOWNSHOT & HORIZONTAL Tables, T1 and T2 values are for part load only
**** In DSG0723D / DSG0724D / DSG0727D 90K, 115K, & 140K DOWNSHOT & HORIZONTAL Tables, T3 values are for high heat mode only

DSG0723W / DSG0724W / DSG0727W 140K DOWNSHOT

SPEED TAP	EXTERNAL STATIC PRESSURE (ESP) IN W. C.	AIRFLOW (CFM)	RPM	WATTS	BHP
T1 ***	0.6	1515	930	492	0.47
	0.7	1470	955	504	0.48
	0.8	1430	985	517	0.50
	0.9	1380	1015	529	0.51
	1.0	1335	1040	543	0.52
	1.1	1290	1070	557	0.54
	1.2	1240	1105	574	0.56
	1.3	1185	1135	589	0.57
	1.4	1140	1165	602	0.59
	1.5	1120	1195	655	0.60
	1.6	1065	1220	666	0.61
	1.7	1010	1245	680	0.63
	1.8	935	1270	654	0.64
T2 ***	0.6	1940	1050	780	0.81
	0.7	1895	1075	800	0.83
	0.8	1855	1100	816	0.85
	0.9	1820	1125	832	0.87
	1.0	1785	1145	847	0.88
	1.1	1750	1170	862	0.90
	1.2	1705	1195	878	0.92
	1.3	1665	1220	894	0.94
	1.4	1620	1240	911	0.95
	1.5	1585	1265	935	0.97
	1.6	1540	1290	953	0.99
	1.7	1495	1310	968	1.01
	1.8	1440	1330	980	1.02
T3 ****	0.6	2050	1080	874	0.91
	0.7	2010	1105	895	0.93
	0.8	1970	1130	913	0.95
	0.9	1935	1150	929	0.97
	1.0	1900	1175	946	0.99
	1.1	1865	1195	961	1.01
	1.2	1825	1220	977	1.03
	1.3	1785	1240	994	1.05
	1.4	1740	1265	1011	1.07
	1.5	1705	1285	1030	1.08
	1.6	1665	1310	1049	1.11
	1.7	1620	1330	1065	1.12
	1.8	1570	1350	1085	1.14
T4	0.6	2690	1260	1639	1.68
	0.7	2650	1285	1665	1.72
	0.8	2615	1305	1689	1.74
	0.9	2580	1325	1712	1.77
	1.0	2545	1345	1738	1.80
	1.1	2510	1365	1760	1.82
	1.2	2475	1385	1783	1.85
	1.3	2450	1400	1804	1.87
	1.4	2415	1415	1826	1.89
	1.5	2380	1435	1841	1.92
	1.6	2345	1455	1863	1.94
	1.7	2315	1475	1882	1.97
	1.8	2280	1495	1912	2.00
T5	0.6	2170	1115	985	1.03
	0.7	2125	1140	1008	1.06
	0.8	2085	1160	1026	1.08
	0.9	2055	1185	1044	1.10
	1.0	2020	1205	1061	1.12
	1.1	1990	1225	1077	1.14
	1.2	1950	1245	1094	1.15
	1.3	1915	1270	1111	1.18
	1.4	1870	1290	1130	1.20
	1.5	1830	1310	1144	1.21
	1.6	1790	1330	1164	1.23
	1.7	1750	1350	1181	1.25
	1.8	1705	1375	1206	1.27

DSG0723W / DSG0724W / DSG0727W 140K DOWNSHOT

SPEED TAP	EXTERNAL STATIC PRESSURE (ESP) IN W. C.	AIRFLOW (CFM)	RPM	WATTS	BHP
T1' ***	0.6	1755	995	644	0.65
	0.7	1715	1025	660	0.67
	0.8	1675	1050	675	0.68
	0.9	1630	1075	689	0.70
	1.0	1595	1100	704	0.72
	1.1	1555	1125	718	0.73
	1.2	1505	1155	734	0.75
	1.3	1460	1180	749	0.77
	1.4	1415	1205	765	0.79
	1.5	1385	1235	800	0.81
	1.6	1340	1260	815	0.82
	1.7	1290	1280	830	0.83
	1.8	1225	1305	827	0.85
T2' ***	0.6	2100	1095	921	0.96
	0.7	2060	1120	943	0.99
	0.8	2020	1145	960	1.01
	0.9	1985	1165	977	1.02
	1.0	1950	1185	994	1.04
	1.1	1920	1210	1010	1.06
	1.2	1880	1230	1026	1.08
	1.3	1840	1255	1043	1.10
	1.4	1800	1275	1061	1.12
	1.5	1760	1295	1078	1.14
	1.6	1720	1320	1097	1.16
	1.7	1675	1340	1114	1.18
	1.8	1630	1360	1136	1.20
T3' ****	0.6	2235	1130	1051	1.10
	0.7	2190	1155	1075	1.12
	0.8	2155	1180	1094	1.15
	0.9	2120	1200	1112	1.17
	1.0	2090	1220	1130	1.19
	1.1	2055	1240	1147	1.21
	1.2	2015	1265	1164	1.23
	1.3	1985	1285	1181	1.25
	1.4	1940	1305	1200	1.27
	1.5	1900	1325	1213	1.29
	1.6	1865	1345	1234	1.31
	1.7	1820	1365	1251	1.33
	1.8	1780	1385	1279	1.35
T4'	0.6	2775	1290	1785	1.82
	0.7	2740	1310	1811	1.85
	0.8	2700	1330	1836	1.88
	0.9	2665	1350	1861	1.91
	1.0	2630	1370	1888	1.94
	1.1	2595	1390	1912	1.97
	1.2	2560	1410	1936	1.99
	1.3	2535	1425	1959	2.01
	1.4	2500	1440	1981	2.04
	1.5	2470	1460	2001	2.06
	1.6	2435	1480	2022	2.09
	1.7	2405	1500	2042	2.12
	1.8	2370	1500	2064	2.12
T5'	0.6	2340	1160	1167	1.22
	0.7	2300	1185	1192	1.25
	0.8	2260	1210	1212	1.27
	0.9	2230	1230	1231	1.29
	1.0	2195	1250	1251	1.32
	1.1	2165	1270	1268	1.34
	1.2	2125	1290	1286	1.36
	1.3	2095	1310	1304	1.38
	1.4	2055	1330	1324	1.40
	1.5	2015	1345	1335	1.42
	1.6	1975	1365	1356	1.44
	1.7	1940	1385	1374	1.46
	1.8	1900	1410	1405	1.48

*** In DSG0723D / DSG0724D / DSG0727D 90K, 115K, & 140K DOWNSHOT & HORIZONTAL Tables, T1 and T2 values are for part load only
**** In DSG0723D / DSG0724D / DSG0727D 90K, 115K, & 140K DOWNSHOT & HORIZONTAL Tables, T3 values are for high heat mode only

DSG0723W / DSG0724W / DSG0727W 140K HORIZONTAL

SPEED TAP	EXTERNAL STATIC PRESSURE (ESP) IN W. C.	AIRFLOW (CFM)	RPM	WATTS	BHP
T1 ***	0.6	1560	895	475	0.45
	0.7	1515	915	486	0.46
	0.8	1475	945	499	0.48
	0.9	1420	975	510	0.49
	1.0	1375	1000	524	0.50
	1.1	1330	1025	538	0.52
	1.2	1275	1060	554	0.53
	1.3	1220	1090	568	0.55
	1.4	1175	1120	581	0.56
	1.5	1155	1145	632	0.58
	1.6	1095	1170	643	0.59
	1.7	1040	1195	656	0.60
	1.8	965	1220	631	0.61
T2 ***	0.6	2000	1010	753	0.78
	0.7	1950	1030	772	0.79
	0.8	1910	1055	787	0.81
	0.9	1875	1080	803	0.83
	1.0	1840	1100	817	0.85
	1.1	1805	1125	832	0.87
	1.2	1755	1145	847	0.88
	1.3	1715	1170	863	0.90
	1.4	1670	1190	879	0.92
	1.5	1635	1215	902	0.94
	1.6	1585	1240	920	0.95
	1.7	1540	1260	934	0.97
	1.8	1485	1275	946	0.98
T3 ****	0.6	2110	1035	843	0.87
	0.7	2070	1060	864	0.89
	0.8	2030	1085	881	0.92
	0.9	1995	1105	896	0.93
	1.0	1955	1130	913	0.95
	1.1	1920	1145	927	0.97
	1.2	1880	1170	943	0.99
	1.3	1840	1190	959	1.00
	1.4	1790	1215	976	1.03
	1.5	1755	1235	994	1.04
	1.6	1715	1260	1012	1.06
	1.7	1670	1275	1028	1.08
	1.8	1615	1295	1047	1.09
T4	0.6	2770	1210	1582	1.62
	0.7	2730	1235	1607	1.65
	0.8	2695	1255	1630	1.68
	0.9	2655	1270	1652	1.70
	1.0	2620	1290	1677	1.72
	1.1	2585	1310	1698	1.75
	1.2	2550	1330	1721	1.78
	1.3	2525	1345	1741	1.80
	1.4	2485	1360	1762	1.82
	1.5	2450	1380	1777	1.84
	1.6	2415	1395	1798	1.86
	1.7	2385	1415	1816	1.89
	1.8	2350	1435	1845	1.92
T5	0.6	2235	1070	951	0.99
	0.7	2190	1095	973	1.01
	0.8	2150	1115	990	1.03
	0.9	2115	1140	1007	1.06
	1.0	2080	1155	1024	1.07
	1.1	2050	1175	1039	1.09
	1.2	2010	1195	1056	1.11
	1.3	1970	1220	1072	1.13
	1.4	1925	1240	1090	1.15
	1.5	1885	1260	1104	1.17
	1.6	1845	1275	1123	1.18
	1.7	1805	1295	1140	1.20
	1.8	-	-	-	-

DSG0723W / DSG0724W / DSG0727W 140K HORIZONTAL

SPEED TAP	EXTERNAL STATIC PRESSURE (ESP) IN W. C.	AIRFLOW (CFM)	RPM	WATTS	BHP
T1′ ***	0.6	1810	955	621	0.62
	0.7	1765	985	637	0.64
	0.8	1725	1010	651	0.66
	0.9	1680	1030	665	0.67
	1.0	1645	1055	679	0.69
	1.1	1600	1080	693	0.70
	1.2	1550	1110	708	0.72
	1.3	1505	1135	723	0.74
	1.4	1455	1155	738	0.75
	1.5	1425	1185	772	0.77
	1.6	1380	1210	786	0.79
	1.7	1330	1230	801	0.80
	1.8	1260	1255	798	0.82
T2′ ***	0.6	2165	1050	889	0.92
	0.7	2120	1075	910	0.95
	0.8	2080	1100	926	0.97
	0.9	2045	1120	943	0.99
	1.0	2010	1140	959	1.00
	1.1	1980	1160	975	1.02
	1.2	1935	1180	990	1.04
	1.3	1895	1205	1006	1.06
	1.4	1855	1225	1024	1.08
	1.5	1815	1245	1040	1.10
	1.6	1770	1265	1059	1.11
	1.7	1725	1285	1075	1.13
	1.8	1680	1305	1096	1.15
T3′ ****	0.6	2300	1085	1014	1.06
	0.7	2255	1110	1037	1.08
	0.8	2220	1135	1056	1.11
	0.9	2185	1150	1073	1.12
	1.0	2155	1170	1090	1.14
	1.1	2115	1190	1107	1.16
	1.2	2075	1215	1123	1.18
	1.3	2045	1235	1140	1.20
	1.4	2000	1255	1158	1.22
	1.5	1955	1270	1171	1.24
	1.6	1920	1290	1191	1.26
	1.7	1875	1310	1207	1.28
	1.8	1835	1330	1234	1.30
T4′	0.6	2860	1240	1723	1.75
	0.7	2820	1260	1748	1.78
	0.8	2780	1275	1772	1.80
	0.9	2745	1295	1796	1.83
	1.0	2710	1315	1822	1.86
	1.1	2675	1335	1845	1.89
	1.2	2635	1355	1868	1.92
	1.3	2610	1370	1890	1.94
	1.4	2575	1380	1912	1.95
	1.5	2545	1400	1931	1.98
	1.6	2510	1420	1951	2.01
	1.7	2475	1440	1971	2.04
	1.8	2440	1440	1992	2.04
T5′	0.6	2410	1115	1126	1.17
	0.7	2370	1140	1150	1.20
	0.8	2330	1160	1170	1.22
	0.9	2295	1180	1188	1.24
	1.0	2260	1200	1207	1.26
	1.1	2230	1220	1224	1.28
	1.2	2190	1240	1241	1.31
	1.3	2160	1260	1258	1.33
	1.4	2115	1275	1278	1.34
	1.5	2075	1290	1288	1.36
	1.6	2035	1310	1309	1.38
	1.7	2000	1330	1326	1.40
	1.8	1955	1355	1356	1.43

*** In DSG0723D / DSG0724D / DSG0727D 90K, 115K, & 140K DOWNSHOT & HORIZONTAL Tables, T1 and T2 values are for part load only
**** In DSG0723D / DSG0724D / DSG0727D 90K, 115K, & 140K DOWNSHOT & HORIZONTAL Tables, T3 values are for high heat mode only

DSG0361D 60K ULN DOWNSHOT

SPEED TAP	EXTERNAL STATIC PRESSURE (ESP) in w. c.	AIRFLOW (CFM)	RPM	WATTS	BHP
T1 *	0.1	1030	525	107	0.10
	0.2	905	560	108	0.10
	0.3	835	605	116	0.11
	0.4	755	660	124	0.12
	0.5	690	705	132	0.13
	0.6	-	-	-	-
	0.7	-	-	-	-
	0.8	-	-	-	-
T2	0.1	1400	645	224	0.23
	0.2	1340	680	233	0.24
	0.3	1285	715	243	0.26
	0.4	1230	755	253	0.27
	0.5	1175	795	266	0.28
	0.6	1115	830	274	0.30
	0.7	1050	865	286	0.31
	0.8	995	895	296	0.32
T3 **	0.1	1095	545	124	0.12
	0.2	980	580	126	0.12
	0.3	915	625	135	0.13
	0.4	840	675	143	0.14
	0.5	780	720	152	0.15
	0.6	690	765	164	0.16
	0.7	615	805	173	0.17
	0.8	-	-	-	-
T4	0.1	1470	670	251	0.26
	0.2	1420	705	261	0.28
	0.3	1365	740	272	0.29
	0.4	1315	775	283	0.30
	0.5	1265	810	296	0.32
	0.6	1205	845	304	0.33
	0.7	1145	880	316	0.35
	0.8	1090	905	327	0.36
T5	0.1	-	-	-	-
	0.2	1500	730	299	0.32
	0.3	1460	765	310	0.33
	0.4	1410	795	322	0.35
	0.5	1365	830	336	0.36
	0.6	1310	865	344	0.38
	0.7	1255	900	357	0.39
	0.8	1205	920	368	0.40

DSG0361D 60K ULN HORIZONTAL

SPEED TAP	EXTERNAL STATIC PRESSURE (ESP) in w. c.	AIRFLOW (CFM)	RPM	WATTS	BHP
T1 *	0.1	1060	505	104	0.09
	0.2	930	540	105	0.10
	0.3	860	585	113	0.11
	0.4	780	635	121	0.12
	0.5	710	680	129	0.13
	0.6	-	-	-	-
	0.7	-	-	-	-
	0.8	-	-	-	-
T2	0.1	1445	625	219	0.22
	0.2	1385	655	227	0.24
	0.3	1325	690	237	0.25
	0.4	1265	730	247	0.26
	0.5	1215	765	259	0.27
	0.6	1145	800	268	0.29
	0.7	1085	835	278	0.30
	0.8	1025	865	289	0.31
T3 **	0.1	1130	525	121	0.11
	0.2	1010	560	123	0.12
	0.3	940	605	132	0.13
	0.4	865	650	139	0.14
	0.5	805	695	148	0.15
	0.6	710	740	160	0.16
	0.7	635	775	169	0.17
	0.8	-	-	-	-
T4	0.1	1500	645	245	0.25
	0.2	1465	680	254	0.27
	0.3	1405	715	265	0.28
	0.4	1355	750	276	0.29
	0.5	1305	780	289	0.31
	0.6	1240	815	296	0.32
	0.7	1180	850	308	0.33
	0.8	1125	875	319	0.34
T5	0.1	-	-	-	-
	0.2	-	-	-	-
	0.3	1500	740	302	0.32
	0.4	1450	765	314	0.33
	0.5	1405	800	328	0.35
	0.6	1350	835	335	0.36
	0.7	1295	870	348	0.38
	0.8	1240	890	359	0.39

* In DSG0363D 60K ULN, DSG0363D 80K ULN, DSG0363D 100K ULN, DSG0364D 60K ULN, DSG0364D 80K ULN, DSG0364D 100K ULN, DSG0481D 80K ULN, DSG0481D 100K ULN, DSG0483D 80K ULN, DSG0483D 100K ULN, DSG0484D 80K ULN, DSG0484D 100K ULN, DSG0601D 80K ULN, DSG0601D 100K ULN, DSG0603D 80K ULN, DSG0603D 100K ULN, DSG0604D 80K ULN, AND DSG0604D 100K ULN DOWNSHOT & HORIZONTAL Tables, T1 values are for fan mode only

** IN DSG0363D 60K ULN, DSG0363D 80K ULN, DSG0363D 100K ULN, DSG0364D 60K ULN, DSG0364D 80K ULN, DSG0364D 100K ULN, DSG0481D 80K ULN, DSG0481D 100K ULN, DSG0483D 80K ULN, DSG0483D 100K ULN, DSG0484D 80K ULN, DSG0484D 100K ULN, DSG0601D 80K ULN, DSG0601D 100K ULN, DSG0603D 80K ULN, DSG0603D 100K ULN, DSG0604D 80K ULN, AND DSG0604D 100K ULN DOWNSHOT & HORIZONTAL Tables, T3 values are for heat mode only

DSG0361D 80K ULN DOWNSHOT

SPEED TAP	EXTERNAL STATIC PRESSURE (ESP) in w. c.	AIRFLOW (CFM)	RPM	WATTS	BHP
T1 *	0.1	1030	525	107	0.02
	0.2	905	560	108	0.02
	0.3	835	605	116	0.02
	0.4	755	660	124	0.02
	0.5	690	705	132	0.03
	0.6	-	-	-	-
	0.7	-	-	-	-
	0.8	-	-	-	-
T2	0.1	1400	640	224	0.23
	0.2	1340	675	233	0.24
	0.3	1285	725	243	0.26
	0.4	1225	750	253	0.27
	0.5	1185	790	265	0.28
	0.6	1120	820	274	0.29
	0.7	1055	865	285	0.31
	0.8	995	895	297	0.32
T3 **	0.1	1370	635	212	0.22
	0.2	1305	670	220	0.23
	0.3	1250	710	230	0.24
	0.4	1190	745	240	0.26
	0.5	1140	785	252	0.27
	0.6	1075	820	261	0.28
	0.7	1010	860	272	0.29
	0.8	950	890	283	0.31
T4	0.1	1470	670	251	0.26
	0.2	1420	705	261	0.28
	0.3	1365	740	272	0.29
	0.4	1315	775	283	0.30
	0.5	1265	810	296	0.32
	0.6	1205	845	304	0.33
	0.7	1145	880	316	0.35
	0.8	1090	905	327	0.36
T5	0.1	2020	855	572	0.61
	0.2	1970	880	590	0.63
	0.3	1930	905	609	0.65
	0.4	1885	935	625	0.67
	0.5	1845	960	641	0.69
	0.6	1805	990	662	0.71
	0.7	1770	1015	678	0.72
	0.8	1730	1010	690	0.72

DSG0361D 80K ULN HORIZONTAL

SPEED TAP	EXTERNAL STATIC PRESSURE (ESP) in w. c.	AIRFLOW (CFM)	RPM	WATTS	BHP
T1 *	0.1	1060	505	104	0.02
	0.2	930	540	105	0.02
	0.3	860	585	113	0.02
	0.4	780	635	121	0.02
	0.5	710	680	129	0.02
	0.6	-	-	-	-
	0.7	-	-	-	-
	0.8	-	-	-	-
T2	0.1	1440	620	219	0.22
	0.2	1380	650	228	0.23
	0.3	1335	700	237	0.25
	0.4	1260	725	247	0.26
	0.5	1220	765	259	0.27
	0.6	1150	790	266	0.28
	0.7	1085	835	278	0.30
	0.8	1025	865	290	0.31
T3 **	0.1	1410	615	207	0.21
	0.2	1345	645	215	0.22
	0.3	1290	685	224	0.23
	0.4	1225	720	234	0.25
	0.5	1175	760	246	0.26
	0.6	1105	790	254	0.27
	0.7	1040	830	265	0.28
	0.8	980	860	276	0.29
T4	0.1	1500	645	245	0.25
	0.2	1465	680	254	0.27
	0.3	1405	715	265	0.28
	0.4	1355	750	276	0.29
	0.5	1305	780	289	0.31
	0.6	1240	815	296	0.32
	0.7	1180	850	308	0.33
	0.8	1125	875	319	0.34
T5	0.1	2080	825	558	0.59
	0.2	2030	850	575	0.61
	0.3	1990	875	594	0.62
	0.4	1940	900	609	0.64
	0.5	1900	925	625	0.66
	0.6	1860	955	645	0.68
	0.7	1825	980	661	0.70
	0.8	1780	975	673	0.70

* In DSG0363D 60K ULN, DSG0363D 80K ULN, DSG0363D 100K ULN, DSG0364D 60K ULN, DSG0364D 80K ULN, DSG0364D 100K ULN, DSG0481D 80K ULN, DSG0481D 100K ULN, DSG0483D 80K ULN, DSG0483D 100K ULN, DSG0484D 80K ULN, DSG0484D 100K ULN, DSG0601D 80K ULN, DSG0601D 100K ULN, DSG0603D 80K ULN, DSG0603D 100K ULN, DSG0604D 80K ULN, AND DSG0604D 100K ULN DOWNSHOT & HORIZONTAL Tables, T1 values are for fan mode only

** IN DSG0363D 60K ULN, DSG0363D 80K ULN, DSG0363D 100K ULN, DSG0364D 60K ULN, DSG0364D 80K ULN, DSG0364D 100K ULN, DSG0481D 80K ULN, DSG0481D 100K ULN, DSG0483D 80K ULN, DSG0483D 100K ULN, DSG0484D 80K ULN, DSG0484D 100K ULN, DSG0601D 80K ULN, DSG0601D 100K ULN, DSG0603D 80K ULN, DSG0603D 100K ULN, DSG0604D 80K ULN, AND DSG0604D 100K ULN DOWNSHOT & HORIZONTAL Tables, T3 values are for heat mode only

DSG0361D 100K ULN DOWNSHOT

SPEED TAP	EXTERNAL STATIC PRESSURE (ESP) in w. c.	AIRFLOW (CFM)	RPM	WATTS	BHP
T1 *	0.1	1030	525	107	0.10
	0.2	905	560	108	0.10
	0.3	835	605	116	0.11
	0.4	755	660	124	0.12
	0.5	690	705	132	0.13
	0.6	-	-	-	-
	0.7	-	-	-	-
	0.8	-	-	-	-
T2	0.1	1400	645	224	0.23
	0.2	1345	680	232	0.24
	0.3	1290	720	243	0.26
	0.4	1230	755	253	0.27
	0.5	1180	790	265	0.28
	0.6	1115	830	274	0.30
	0.7	1055	865	285	0.31
	0.8	995	895	296	0.32
T3 **	0.1	1400	645	223	0.23
	0.2	1340	680	231	0.24
	0.3	1285	720	242	0.26
	0.4	1225	755	252	0.27
	0.5	1175	790	264	0.28
	0.6	1110	830	273	0.30
	0.7	1050	865	284	0.31
	0.8	990	895	295	0.32
T4	0.1	1470	670	251	0.26
	0.2	1420	705	261	0.28
	0.3	1365	740	272	0.29
	0.4	1315	775	283	0.30
	0.5	1265	810	296	0.32
	0.6	1205	845	304	0.33
	0.7	1145	880	316	0.35
	0.8	1090	905	327	0.36
T5	0.1	-	-	-	-
	0.2	1500	730	299	0.32
	0.3	1460	765	310	0.33
	0.4	1410	795	322	0.35
	0.5	1365	830	336	0.36
	0.6	1310	865	344	0.38
	0.7	1255	900	357	0.39
	0.8	1205	920	368	0.40

DSG0361D 100K ULN HORIZONTAL

SPEED TAP	EXTERNAL STATIC PRESSURE (ESP) in w. c.	AIRFLOW (CFM)	RPM	WATTS	BHP
T1 *	0.1	1060	505	104	0.09
	0.2	930	540	105	0.10
	0.3	860	585	113	0.11
	0.4	780	635	121	0.12
	0.5	710	680	129	0.13
	0.6	-	-	-	-
	0.7	-	-	-	-
	0.8	-	-	-	-
T2	0.1	1440	620	218	0.22
	0.2	1385	655	226	0.23
	0.3	1330	695	237	0.25
	0.4	1265	730	247	0.26
	0.5	1215	760	258	0.27
	0.6	1150	800	267	0.29
	0.7	1085	835	278	0.30
	0.8	1025	865	289	0.31
T3 **	0.1	1440	620	217	0.22
	0.2	1380	655	225	0.23
	0.3	1325	695	236	0.25
	0.4	1260	730	246	0.26
	0.5	1210	760	257	0.27
	0.6	1145	800	266	0.29
	0.7	1080	835	277	0.30
	0.8	1020	865	288	0.31
T4	0.1	1500	645	245	0.25
	0.2	1465	680	254	0.27
	0.3	1405	715	265	0.28
	0.4	1355	750	276	0.29
	0.5	1305	780	289	0.31
	0.6	1240	815	296	0.32
	0.7	1180	850	308	0.33
	0.8	1125	875	319	0.34
T5	0.1	-	-	-	-
	0.2	-	-	-	-
	0.3	1500	740	302	0.32
	0.4	1450	765	314	0.33
	0.5	1405	800	328	0.35
	0.6	1350	835	335	0.36
	0.7	1295	870	348	0.38
	0.8	1240	890	359	0.39

* In DSG0363D 60K ULN, DSG0363D 80K ULN, DSG0363D 100K ULN, DSG0364D 60K ULN, DSG0364D 80K ULN, DSG0364D 100K ULN, DSG0481D 80K ULN, DSG0481D 100K ULN, DSG0483D 80K ULN, DSG0483D 100K ULN, DSG0484D 80K ULN, DSG0484D 100K ULN, DSG0601D 80K ULN, DSG0601D 100K ULN, DSG0603D 80K ULN, DSG0603D 100K ULN, DSG0604D 80K ULN, AND DSG0604D 100K ULN DOWNSHOT & HORIZONTAL Tables, T1 values are for fan mode only

** IN DSG0363D 60K ULN, DSG0363D 80K ULN, DSG0363D 100K ULN, DSG0364D 60K ULN, DSG0364D 80K ULN, DSG0364D 100K ULN, DSG0481D 80K ULN, DSG0481D 100K ULN, DSG0483D 80K ULN, DSG0483D 100K ULN, DSG0484D 80K ULN, DSG0484D 100K ULN, DSG0601D 80K ULN, DSG0601D 100K ULN, DSG0603D 80K ULN, DSG0603D 100K ULN, DSG0604D 80K ULN, AND DSG0604D 100K ULN DOWNSHOT & HORIZONTAL Tables, T3 values are for heat mode only

DSG0363D 60K ULN DOWNSHOT

SPEED TAP	EXTERNAL STATIC PRESSURE (ESP) in w. c.	AIRFLOW (CFM)	RPM	WATTS	BHP
T1 *	0.1	1030	525	107	0.10
	0.2	905	560	108	0.10
	0.3	835	605	116	0.11
	0.4	755	660	124	0.12
	0.5	690	705	132	0.13
	0.6	-	-	-	-
	0.7	-	-	-	-
	0.8	-	-	-	-
T2	0.1	1400	645	224	0.23
	0.2	1345	680	232	0.24
	0.3	1290	720	243	0.26
	0.4	1230	755	253	0.27
	0.5	1180	790	265	0.28
	0.6	1115	830	274	0.30
	0.7	1055	865	285	0.31
	0.8	995	895	296	0.32
T3 **	0.1	1400	645	223	0.23
	0.2	1340	680	231	0.24
	0.3	1285	720	242	0.26
	0.4	1225	755	252	0.27
	0.5	1175	790	264	0.28
	0.6	1110	830	273	0.30
	0.7	1050	865	284	0.31
	0.8	990	895	295	0.32
T4	0.1	1470	670	251	0.26
	0.2	1420	705	261	0.28
	0.3	1365	740	272	0.29
	0.4	1315	775	283	0.30
	0.5	1265	810	296	0.32
	0.6	1205	845	304	0.33
	0.7	1145	880	316	0.35
	0.8	1090	905	327	0.36
T5	0.1	-	-	-	-
	0.2	1500	730	299	0.32
	0.3	1460	765	310	0.33
	0.4	1410	795	322	0.35
	0.5	1365	830	336	0.36
	0.6	1310	865	344	0.38
	0.7	1255	900	357	0.39
	0.8	1205	920	368	0.40

DSG0363D 60K ULN HORIZONTAL

SPEED TAP	EXTERNAL STATIC PRESSURE (ESP) in w. c.	AIRFLOW (CFM)	RPM	WATTS	BHP
T1 *	0.1	1060	505	104	0.09
	0.2	930	540	105	0.10
	0.3	860	585	113	0.11
	0.4	780	635	121	0.12
	0.5	710	680	129	0.13
	0.6	-	-	-	-
	0.7	-	-	-	-
	0.8	-	-	-	-
T2	0.1	1440	620	218	0.22
	0.2	1385	655	226	0.23
	0.3	1330	695	237	0.25
	0.4	1265	730	247	0.26
	0.5	1215	760	258	0.27
	0.6	1150	800	267	0.29
	0.7	1085	835	278	0.30
	0.8	1025	865	289	0.31
T3 **	0.1	1440	620	217	0.22
	0.2	1380	655	225	0.23
	0.3	1325	695	236	0.25
	0.4	1260	730	246	0.26
	0.5	1210	760	257	0.27
	0.6	1145	800	266	0.29
	0.7	1080	835	277	0.30
	0.8	1020	865	288	0.31
T4	0.1	1500	645	245	0.25
	0.2	1465	680	254	0.27
	0.3	1405	715	265	0.28
	0.4	1355	750	276	0.29
	0.5	1305	780	289	0.31
	0.6	1240	815	296	0.32
	0.7	1180	850	308	0.33
	0.8	1125	875	319	0.34
T5	0.1	-	-	-	-
	0.2	-	-	-	-
	0.3	1500	740	302	0.32
	0.4	1450	765	314	0.33
	0.5	1405	800	328	0.35
	0.6	1350	835	335	0.36
	0.7	1295	870	348	0.38
	0.8	1240	890	359	0.39

* In DSG0363D 60K ULN, DSG0363D 80K ULN, DSG0363D 100K ULN, DSG0364D 60K ULN, DSG0364D 80K ULN, DSG0364D 100K ULN, DSG0481D 80K ULN, DSG0481D 100K ULN, DSG0483D 80K ULN, DSG0483D 100K ULN, DSG0484D 80K ULN, DSG0484D 100K ULN, DSG0601D 80K ULN, DSG0601D 100K ULN, DSG0603D 80K ULN, DSG0603D 100K ULN, DSG0604D 80K ULN, AND DSG0604D 100K ULN DOWNSHOT & HORIZONTAL Tables, T1 values are for fan mode only

** IN DSG0363D 60K ULN, DSG0363D 80K ULN, DSG0363D 100K ULN, DSG0364D 60K ULN, DSG0364D 80K ULN, DSG0364D 100K ULN, DSG0481D 80K ULN, DSG0481D 100K ULN, DSG0483D 80K ULN, DSG0483D 100K ULN, DSG0484D 80K ULN, DSG0484D 100K ULN, DSG0601D 80K ULN, DSG0601D 100K ULN, DSG0603D 80K ULN, DSG0603D 100K ULN, DSG0604D 80K ULN, AND DSG0604D 100K ULN DOWNSHOT & HORIZONTAL Tables, T3 values are for heat mode only

DSG0363D 80K ULN DOWNSHOT

SPEED TAP	EXTERNAL STATIC PRESSURE (ESP) in w. c.	AIRFLOW (CFM)	RPM	WATTS	BHP
T1 *	0.1	1030	525	107	0.10
	0.2	905	560	108	0.10
	0.3	835	605	116	0.11
	0.4	755	660	124	0.12
	0.5	690	705	132	0.13
	0.6	-	-	-	-
	0.7	-	-	-	-
	0.8	-	-	-	-
T2	0.1	1400	640	224	0.23
	0.2	1340	675	233	0.24
	0.3	1285	725	243	0.26
	0.4	1225	750	253	0.27
	0.5	1185	790	265	0.28
	0.6	1120	820	274	0.29
	0.7	1055	865	285	0.31
	0.8	995	895	297	0.32
T3 **	0.1	1370	635	212	0.22
	0.2	1305	670	220	0.23
	0.3	1250	710	230	0.24
	0.4	1190	745	240	0.26
	0.5	1140	785	252	0.27
	0.6	1075	820	261	0.28
	0.7	1010	860	272	0.29
	0.8	950	890	283	0.31
T4	0.1	1470	670	251	0.26
	0.2	1420	705	261	0.28
	0.3	1365	740	272	0.29
	0.4	1315	775	283	0.30
	0.5	1265	810	296	0.32
	0.6	1205	845	304	0.33
	0.7	1145	880	316	0.35
	0.8	1090	905	327	0.36
T5	0.1	-	-	-	-
	0.2	1500	730	299	0.32
	0.3	1460	765	310	0.33
	0.4	1410	795	322	0.35
	0.5	1365	830	336	0.36
	0.6	1310	865	344	0.38
	0.7	1255	900	357	0.39
	0.8	1205	920	368	0.40

DSG0363D 80K ULN HORIZONTAL

SPEED TAP	EXTERNAL STATIC PRESSURE (ESP) in w. c.	AIRFLOW (CFM)	RPM	WATTS	BHP
T1 *	0.1	1060	505	104	0.09
	0.2	930	540	105	0.10
	0.3	860	585	113	0.11
	0.4	780	635	121	0.12
	0.5	710	680	129	0.13
	0.6	-	-	-	-
	0.7	-	-	-	-
	0.8	-	-	-	-
T2	0.1	1440	620	219	0.22
	0.2	1380	650	228	0.23
	0.3	1335	700	237	0.25
	0.4	1260	725	247	0.26
	0.5	1220	765	259	0.27
	0.6	1150	790	266	0.28
	0.7	1085	835	278	0.3
	0.8	1025	865	290	0.31
T3 **	0.1	1410	615	207	0.21
	0.2	1345	645	215	0.22
	0.3	1290	685	224	0.23
	0.4	1225	720	234	0.25
	0.5	1175	760	246	0.26
	0.6	1105	790	254	0.27
	0.7	1040	830	265	0.28
	0.8	980	860	276	0.29
T4	0.1	1500	645	245	0.25
	0.2	1465	680	254	0.27
	0.3	1405	715	265	0.28
	0.4	1355	750	276	0.29
	0.5	1305	780	289	0.31
	0.6	1240	815	296	0.32
	0.7	1180	850	308	0.33
	0.8	1125	875	319	0.34
T5	0.1	-	-	-	-
	0.2	-	-	-	-
	0.3	1500	740	302	0.32
	0.4	1450	765	314	0.33
	0.5	1405	800	328	0.35
	0.6	1350	835	335	0.36
	0.7	1295	870	348	0.38
	0.8	1240	890	359	0.39

* In DSG0363D 60K ULN, DSG0363D 80K ULN, DSG0363D 100K ULN, DSG0364D 60K ULN, DSG0364D 80K ULN, DSG0364D 100K ULN, DSG0481D 80K ULN, DSG0481D 100K ULN, DSG0483D 80K ULN, DSG0483D 100K ULN, DSG0484D 80K ULN, DSG0484D 100K ULN, DSG0601D 80K ULN, DSG0601D 100K ULN, DSG0603D 80K ULN, DSG0603D 100K ULN, DSG0604D 80K ULN, AND DSG0604D 100K ULN DOWNSHOT & HORIZONTAL Tables, T1 values are for fan mode only

** IN DSG0363D 60K ULN, DSG0363D 80K ULN, DSG0363D 100K ULN, DSG0364D 60K ULN, DSG0364D 80K ULN, DSG0364D 100K ULN, DSG0481D 80K ULN, DSG0481D 100K ULN, DSG0483D 80K ULN, DSG0483D 100K ULN, DSG0484D 80K ULN, DSG0484D 100K ULN, DSG0601D 80K ULN, DSG0601D 100K ULN, DSG0603D 80K ULN, DSG0603D 100K ULN, DSG0604D 80K ULN, AND DSG0604D 100K ULN DOWNSHOT & HORIZONTAL Tables, T3 values are for heat mode only

DSG0363D 100K ULN DOWNSHOT

SPEED TAP	EXTERNAL STATIC PRESSURE (ESP) in w. c.	AIRFLOW (CFM)	RPM	WATTS	BHP
T1 *	0.1	1030	525	107	0.10
	0.2	905	560	108	0.10
	0.3	835	605	116	0.11
	0.4	755	660	124	0.12
	0.5	690	705	132	0.13
	0.6	-	-	-	-
	0.7	-	-	-	-
	0.8	-	-	-	-
T2	0.1	1400	645	224	0.23
	0.2	1345	680	232	0.24
	0.3	1290	720	243	0.26
	0.4	1230	755	253	0.27
	0.5	1180	790	265	0.28
	0.6	1115	830	274	0.3
	0.7	1055	865	285	0.31
	0.8	995	895	296	0.32
T3 **	0.1	1400	645	223	0.23
	0.2	1340	680	231	0.24
	0.3	1285	720	242	0.26
	0.4	1225	755	252	0.27
	0.5	1175	790	264	0.28
	0.6	1110	830	273	0.30
	0.7	1050	865	284	0.31
	0.8	990	895	295	0.32
T4	0.1	1470	670	251	0.26
	0.2	1420	705	261	0.28
	0.3	1365	740	272	0.29
	0.4	1315	775	283	0.30
	0.5	1265	810	296	0.32
	0.6	1205	845	304	0.33
	0.7	1145	880	316	0.35
	0.8	1090	905	327	0.36
T5	0.1	-	-	-	-
	0.2	1500	730	299	0.32
	0.3	1460	765	310	0.33
	0.4	1410	795	322	0.35
	0.5	1365	830	336	0.36
	0.6	1310	865	344	0.38
	0.7	1255	900	357	0.39
	0.8	1205	920	368	0.40

DSG0363D 100K ULN HORIZONTAL

SPEED TAP	EXTERNAL STATIC PRESSURE (ESP) in w. c.	AIRFLOW (CFM)	RPM	WATTS	BHP
T1 *	0.1	1060	505	104	0.09
	0.2	930	540	105	0.10
	0.3	860	585	113	0.11
	0.4	780	635	121	0.12
	0.5	710	680	129	0.13
	0.6	-	-	-	-
	0.7	-	-	-	-
	0.8	-	-	-	-
T2	0.1	1440	620	218	0.22
	0.2	1385	655	226	0.23
	0.3	1330	695	237	0.25
	0.4	1265	730	247	0.26
	0.5	1215	760	258	0.27
	0.6	1150	800	267	0.29
	0.7	1085	835	278	0.3
	0.8	1025	865	289	0.31
T3 **	0.1	1440	620	217	0.22
	0.2	1380	655	225	0.23
	0.3	1325	695	236	0.25
	0.4	1260	730	246	0.26
	0.5	1210	760	257	0.27
	0.6	1145	800	266	0.29
	0.7	1080	835	277	0.30
	0.8	1020	865	288	0.31
T4	0.1	1500	645	245	0.25
	0.2	1465	680	254	0.27
	0.3	1405	715	265	0.28
	0.4	1355	750	276	0.29
	0.5	1305	780	289	0.31
	0.6	1240	815	296	0.32
	0.7	1180	850	308	0.33
	0.8	1125	875	319	0.34
T5	0.1	-	-	-	-
	0.2	-	-	-	-
	0.3	1500	740	302	0.32
	0.4	1450	765	314	0.33
	0.5	1405	800	328	0.35
	0.6	1350	835	335	0.36
	0.7	1295	870	348	0.38
	0.8	1240	890	359	0.39

* In DSG0363D 60K ULN, DSG0363D 80K ULN, DSG0363D 100K ULN, DSG0364D 60K ULN, DSG0364D 80K ULN, DSG0364D 100K ULN, DSG0481D 80K ULN, DSG0481D 100K ULN, DSG0483D 80K ULN, DSG0483D 100K ULN, DSG0484D 80K ULN, DSG0484D 100K ULN, DSG0601D 80K ULN, DSG0601D 100K ULN, DSG0603D 80K ULN, DSG0603D 100K ULN, DSG0604D 80K ULN, AND DSG0604D 100K ULN DOWNSHOT & HORIZONTAL Tables, T1 values are for fan mode only

** IN DSG0363D 60K ULN, DSG0363D 80K ULN, DSG0363D 100K ULN, DSG0364D 60K ULN, DSG0364D 80K ULN, DSG0364D 100K ULN, DSG0481D 80K ULN, DSG0481D 100K ULN, DSG0483D 80K ULN, DSG0483D 100K ULN, DSG0484D 80K ULN, DSG0484D 100K ULN, DSG0601D 80K ULN, DSG0601D 100K ULN, DSG0603D 80K ULN, DSG0603D 100K ULN, DSG0604D 80K ULN, AND DSG0604D 100K ULN DOWNSHOT & HORIZONTAL Tables, T3 values are for heat mode only

DSG0364D 60K ULN DOWNSHOT

SPEED TAP	EXTERNAL STATIC PRESSURE (ESP) in w. c.	AIRFLOW (CFM)	RPM	WATTS	BHP
T1 *	0.1	1145	555	129	0.13
	0.2	1070	595	139	0.14
	0.3	1005	635	147	0.15
	0.4	940	675	157	0.16
	0.5	865	720	166	0.17
	0.6	790	760	175	0.18
	0.7	720	800	184	0.19
	0.8	630	855	198	0.21
T2	0.1	1405	635	217	0.23
	0.2	1345	675	229	0.24
	0.3	1285	710	240	0.26
	0.4	1230	745	251	0.27
	0.5	1170	785	262	0.28
	0.6	1110	820	273	0.3
	0.7	1050	860	284	0.31
	0.8	975	900	295	0.32
T3 **	0.1	1415	640	221	0.23
	0.2	1355	680	233	0.25
	0.3	1295	715	244	0.26
	0.4	1240	750	255	0.27
	0.5	1180	790	266	0.29
	0.6	1120	825	277	0.30
	0.7	1060	860	288	0.31
	0.8	990	900	299	0.33
T4	0.1	1490	665	250	0.27
	0.2	1430	700	263	0.28
	0.3	1375	735	274	0.29
	0.4	1320	770	285	0.31
	0.5	1265	805	297	0.32
	0.6	1210	840	308	0.34
	0.7	1155	875	320	0.35
	0.8	1090	915	331	0.37
T5	0.1	-	-	-	-
	0.2	-	-	-	-
	0.3	1480	765	317	0.34
	0.4	1430	800	328	0.36
	0.5	1375	835	341	0.37
	0.6	1325	865	352	0.39
	0.7	1270	895	365	0.40
	0.8	1215	930	376	0.42

DSG0364D 60K ULN HORIZONTAL

SPEED TAP	EXTERNAL STATIC PRESSURE (ESP) in w. c.	AIRFLOW (CFM)	RPM	WATTS	BHP
T1 *	0.1	1175	535	125	0.13
	0.2	1095	575	135	0.14
	0.3	1030	615	143	0.15
	0.4	965	650	152	0.16
	0.5	885	695	161	0.17
	0.6	810	735	170	0.18
	0.7	740	770	178	0.19
	0.8	645	825	192	0.20
T2	0.1	1440	615	210	0.22
	0.2	1380	650	222	0.23
	0.3	1315	685	233	0.25
	0.4	1260	720	243	0.26
	0.5	1200	760	254	0.27
	0.6	1135	790	265	0.29
	0.7	1075	830	275	0.3
	0.8	1000	870	286	0.31
T3 **	0.1	1450	620	214	0.23
	0.2	1390	655	226	0.24
	0.3	1325	690	237	0.25
	0.4	1270	725	247	0.26
	0.5	1210	760	258	0.28
	0.6	1150	795	269	0.29
	0.7	1085	830	279	0.30
	0.8	1015	870	290	0.32
T4	0.1	-	-	-	-
	0.2	1465	675	255	0.27
	0.3	1410	710	266	0.28
	0.4	1355	745	276	0.30
	0.5	1295	775	288	0.31
	0.6	1240	810	299	0.32
	0.7	1185	845	310	0.34
	0.8	1115	885	321	0.35
T5	0.1	-	-	-	-
	0.2	-	-	-	-
	0.3	1500	740	307	0.33
	0.4	1465	770	318	0.34
	0.5	1410	805	331	0.36
	0.6	1360	835	341	0.37
	0.7	1300	865	354	0.39
	0.8	1245	895	365	0.40

* In DSG0363D 60K ULN, DSG0363D 80K ULN, DSG0363D 100K ULN, DSG0364D 60K ULN, DSG0364D 80K ULN, DSG0364D 100K ULN, DSG0481D 80K ULN, DSG0481D 100K ULN, DSG0483D 80K ULN, DSG0483D 100K ULN, DSG0484D 80K ULN, DSG0484D 100K ULN, DSG0601D 80K ULN, DSG0601D 100K ULN, DSG0603D 80K ULN, DSG0603D 100K ULN, DSG0604D 80K ULN, AND DSG0604D 100K ULN DOWNSHOT & HORIZONTAL Tables, T1 values are for fan mode only

** IN DSG0363D 60K ULN, DSG0363D 80K ULN, DSG0363D 100K ULN, DSG0364D 60K ULN, DSG0364D 80K ULN, DSG0364D 100K ULN, DSG0481D 80K ULN, DSG0481D 100K ULN, DSG0483D 80K ULN, DSG0483D 100K ULN, DSG0484D 80K ULN, DSG0484D 100K ULN, DSG0601D 80K ULN, DSG0601D 100K ULN, DSG0603D 80K ULN, DSG0603D 100K ULN, DSG0604D 80K ULN, AND DSG0604D 100K ULN DOWNSHOT & HORIZONTAL Tables, T3 values are for heat mode only

DSG0364D 80K ULN DOWNSHOT

SPEED TAP	EXTERNAL STATIC PRESSURE (ESP) in w. c.	AIRFLOW (CFM)	RPM	WATTS	BHP
T1 *	0.1	1145	555	129	0.13
	0.2	1070	595	139	0.14
	0.3	1005	635	147	0.15
	0.4	940	675	157	0.16
	0.5	865	720	166	0.17
	0.6	790	760	175	0.18
	0.7	720	800	184	0.19
	0.8	630	855	198	0.21
T2	0.1	1405	635	217	0.23
	0.2	1345	675	229	0.24
	0.3	1285	710	240	0.26
	0.4	1230	745	251	0.27
	0.5	1170	785	262	0.28
	0.6	1110	820	273	0.3
	0.7	1050	860	284	0.31
	0.8	975	900	295	0.32
T3 **	0.1	1415	640	221	0.23
	0.2	1355	680	233	0.25
	0.3	1295	715	244	0.26
	0.4	1240	750	255	0.27
	0.5	1180	790	266	0.29
	0.6	1120	825	277	0.30
	0.7	1060	860	288	0.31
	0.8	990	900	299	0.33
T4	0.1	1490	665	250	0.27
	0.2	1430	700	263	0.28
	0.3	1375	735	274	0.29
	0.4	1320	770	285	0.31
	0.5	1265	805	297	0.32
	0.6	1210	840	308	0.34
	0.7	1155	875	320	0.35
	0.8	1090	915	331	0.37
T5	0.1	-	-	-	-
	0.2	-	-	-	-
	0.3	1480	765	317	0.34
	0.4	1430	800	328	0.36
	0.5	1375	835	341	0.37
	0.6	1325	865	352	0.39
	0.7	1270	895	365	0.40
	0.8	1215	930	376	0.42

DSG0364D 80K ULN HORIZONTAL

SPEED TAP	EXTERNAL STATIC PRESSURE (ESP) in w. c.	AIRFLOW (CFM)	RPM	WATTS	BHP
T1 *	0.1	1175	535	125	0.13
	0.2	1095	575	135	0.14
	0.3	1030	615	143	0.15
	0.4	965	650	152	0.16
	0.5	885	695	161	0.17
	0.6	810	735	170	0.18
	0.7	740	770	178	0.19
	0.8	645	825	192	0.20
T2	0.1	1440	615	210	0.22
	0.2	1380	650	222	0.23
	0.3	1315	685	233	0.25
	0.4	1260	720	243	0.26
	0.5	1200	760	254	0.27
	0.6	1135	790	265	0.29
	0.7	1075	830	275	0.3
	0.8	1000	870	286	0.31
T3 **	0.1	1450	620	214	0.23
	0.2	1390	655	226	0.24
	0.3	1325	690	237	0.25
	0.4	1270	725	247	0.26
	0.5	1210	760	258	0.28
	0.6	1150	795	269	0.29
	0.7	1085	830	279	0.30
	0.8	1015	870	290	0.32
T4	0.1	-	-	-	-
	0.2	1465	675	255	0.27
	0.3	1410	710	266	0.28
	0.4	1355	745	276	0.30
	0.5	1295	775	288	0.31
	0.6	1240	810	299	0.32
	0.7	1185	845	310	0.34
	0.8	1115	885	321	0.35
T5	0.1	-	-	-	-
	0.2	-	-	-	-
	0.3	1500	740	307	0.33
	0.4	1465	770	318	0.34
	0.5	1410	805	331	0.36
	0.6	1360	835	341	0.37
	0.7	1300	865	354	0.39
	0.8	1245	895	365	0.40

* In DSG0363D 60K ULN, DSG0363D 80K ULN, DSG0363D 100K ULN, DSG0364D 60K ULN, DSG0364D 80K ULN, DSG0364D 100K ULN, DSG0481D 80K ULN, DSG0481D 100K ULN, DSG0483D 80K ULN, DSG0483D 100K ULN, DSG0484D 80K ULN, DSG0484D 100K ULN, DSG0601D 80K ULN, DSG0601D 100K ULN, DSG0603D 80K ULN, DSG0603D 100K ULN, DSG0604D 80K ULN, AND DSG0604D 100K ULN DOWNSHOT & HORIZONTAL Tables, T1 values are for fan mode only

** IN DSG0363D 60K ULN, DSG0363D 80K ULN, DSG0363D 100K ULN, DSG0364D 60K ULN, DSG0364D 80K ULN, DSG0364D 100K ULN, DSG0481D 80K ULN, DSG0481D 100K ULN, DSG0483D 80K ULN, DSG0483D 100K ULN, DSG0484D 80K ULN, DSG0484D 100K ULN, DSG0601D 80K ULN, DSG0601D 100K ULN, DSG0603D 80K ULN, DSG0603D 100K ULN, DSG0604D 80K ULN, AND DSG0604D 100K ULN DOWNSHOT & HORIZONTAL Tables, T3 values are for heat mode only

DSG0364D 100K ULN DOWNSHOT

SPEED TAP	EXTERNAL STATIC PRESSURE (ESP) in w. c.	AIRFLOW (CFM)	RPM	WATTS	BHP
T1 *	0.1	1225	580	155	0.16
	0.2	1155	620	166	0.17
	0.3	1095	660	175	0.18
	0.4	1030	700	184	0.20
	0.5	960	740	194	0.21
	0.6	895	780	204	0.22
	0.7	825	820	214	0.23
	0.8	740	870	227	0.24
T2	0.1	1405	640	217	0.23
	0.2	1340	675	229	0.24
	0.3	1285	710	240	0.26
	0.4	1225	750	251	0.27
	0.5	1165	785	262	0.28
	0.6	1105	820	272	0.3
	0.7	1045	855	283	0.31
	0.8	975	900	295	0.32
T3 **	0.1	1440	650	231	0.24
	0.2	1380	685	243	0.26
	0.3	1320	720	254	0.27
	0.4	1265	760	265	0.29
	0.5	1205	795	276	0.30
	0.6	1150	830	287	0.31
	0.7	1090	865	298	0.33
	0.8	1025	905	309	0.34
T4	0.1	1490	665	250	0.27
	0.2	1430	700	263	0.28
	0.3	1375	735	274	0.29
	0.4	1320	770	285	0.31
	0.5	1265	805	297	0.32
	0.6	1210	840	308	0.34
	0.7	1155	875	320	0.35
	0.8	1090	915	331	0.37
T5	0.1	-	-	-	-
	0.2	-	-	-	-
	0.3	1480	765	317	0.34
	0.4	1430	800	328	0.36
	0.5	1375	835	341	0.37
	0.6	1325	865	352	0.39
	0.7	1270	895	365	0.40
	0.8	1215	930	376	0.42

DSG0364D 100K ULN HORIZONTAL

SPEED TAP	EXTERNAL STATIC PRESSURE (ESP) in w. c.	AIRFLOW (CFM)	RPM	WATTS	BHP
T1 *	0.1	1255	560	150	0.16
	0.2	1185	600	161	0.17
	0.3	1120	635	170	0.18
	0.4	1055	675	178	0.19
	0.5	985	715	188	0.20
	0.6	915	755	198	0.21
	0.7	845	790	208	0.22
	0.8	760	840	220	0.23
T2	0.1	1440	615	211	0.22
	0.2	1375	650	223	0.23
	0.3	1315	685	232	0.25
	0.4	1255	725	243	0.26
	0.5	1195	755	254	0.27
	0.6	1135	790	264	0.28
	0.7	1070	825	275	0.3
	0.8	1000	870	286	0.31
T3 **	0.1	1475	625	224	0.24
	0.2	1415	660	236	0.25
	0.3	1355	695	246	0.26
	0.4	1295	735	257	0.28
	0.5	1235	765	268	0.29
	0.6	1180	800	278	0.30
	0.7	1115	835	289	0.31
	0.8	1050	875	300	0.33
T4	0.1	-	-	-	-
	0.2	1465	675	255	0.27
	0.3	1410	710	266	0.28
	0.4	1355	745	276	0.30
	0.5	1295	775	288	0.31
	0.6	1240	810	299	0.32
	0.7	1185	845	310	0.34
	0.8	1115	885	321	0.35
T5	0.1	-	-	-	-
	0.2	-	-	-	-
	0.3	1500	740	307	0.33
	0.4	1465	770	318	0.34
	0.5	1410	805	331	0.36
	0.6	1360	835	341	0.37
	0.7	1300	865	354	0.39
	0.8	1245	895	365	0.40

* In DSG0363D 60K ULN, DSG0363D 80K ULN, DSG0363D 100K ULN, DSG0364D 60K ULN, DSG0364D 80K ULN, DSG0364D 100K ULN, DSG0481D 80K ULN, DSG0481D 100K ULN, DSG0483D 80K ULN, DSG0483D 100K ULN, DSG0484D 80K ULN, DSG0484D 100K ULN, DSG0601D 80K ULN, DSG0601D 100K ULN, DSG0603D 80K ULN, DSG0603D 100K ULN, DSG0604D 80K ULN, AND DSG0604D 100K ULN DOWNSHOT & HORIZONTAL Tables, T1 values are for fan mode only

** IN DSG0363D 60K ULN, DSG0363D 80K ULN, DSG0363D 100K ULN, DSG0364D 60K ULN, DSG0364D 80K ULN, DSG0364D 100K ULN, DSG0481D 80K ULN, DSG0481D 100K ULN, DSG0483D 80K ULN, DSG0483D 100K ULN, DSG0484D 80K ULN, DSG0484D 100K ULN, DSG0601D 80K ULN, DSG0601D 100K ULN, DSG0603D 80K ULN, DSG0603D 100K ULN, DSG0604D 80K ULN, AND DSG0604D 100K ULN DOWNSHOT & HORIZONTAL Tables, T3 values are for heat mode only

DSG0481D 80K ULN DOWNSHOT

SPEED TAP	EXTERNAL STATIC PRESSURE (ESP) in w. c.	AIRFLOW (CFM)	RPM	WATTS	BHP
T1 *	0.1	1075	575	137	0.05
	0.2	1015	615	144	0.06
	0.3	960	655	154	0.06
	0.4	925	705	162	0.07
	0.5	840	745	173	0.07
	0.6	-	-	-	-
	0.7	-	-	-	-
	0.8	-	-	-	-
T2	0.1	1725	800	415	0.45
	0.2	1675	830	426	0.47
	0.3	1630	855	440	0.48
	0.4	1585	885	456	0.50
	0.5	1540	915	468	0.52
	0.6	1500	945	484	0.53
	0.7	1450	975	495	0.55
	0.8	1405	1005	512	0.57
T3 **	0.1	1460	705	280	0.30
	0.2	1405	740	289	0.31
	0.3	1355	770	301	0.32
	0.4	1315	810	315	0.34
	0.5	1255	840	325	0.35
	0.6	1190	875	338	0.37
	0.7	1130	910	348	0.38
	0.8	1070	945	362	0.40
T4	0.1	1830	840	479	0.53
	0.2	1780	865	492	0.54
	0.3	1735	895	506	0.56
	0.4	1695	920	524	0.58
	0.5	1655	945	536	0.59
	0.6	1610	975	551	0.61
	0.7	1570	1005	564	0.63
	0.8	1525	1035	581	0.65
T5	0.1	1955	885	571	0.63
	0.2	1910	915	586	0.65
	0.3	1870	940	601	0.67
	0.4	1825	965	619	0.69
	0.5	1790	990	633	0.71
	0.6	1755	1015	649	0.72
	0.7	1715	1040	662	0.74
	0.8	1675	1065	679	0.76

DSG0481D 80K ULN HORIZONTAL

SPEED TAP	EXTERNAL STATIC PRESSURE (ESP) in w. c.	AIRFLOW (CFM)	RPM	WATTS	BHP
T1 *	0.1	1125	545	130	0.05
	0.2	1060	585	137	0.06
	0.3	1005	620	146	0.06
	0.4	965	670	154	0.06
	0.5	880	710	164	0.07
	0.6	-	-	-	-
	0.7	-	-	-	-
	0.8	-	-	-	-
T2	0.1	1800	760	394	0.43
	0.2	1750	790	405	0.45
	0.3	1705	810	418	0.46
	0.4	1655	840	433	0.48
	0.5	1610	870	445	0.49
	0.6	1565	900	459	0.51
	0.7	1515	925	469	0.52
	0.8	1470	955	486	0.54
T3 **	0.1	1525	670	266	0.28
	0.2	1470	705	275	0.30
	0.3	1415	730	286	0.31
	0.4	1375	770	299	0.32
	0.5	1310	800	309	0.34
	0.6	1245	830	321	0.35
	0.7	1180	865	331	0.36
	0.8	1120	900	344	0.38
T4	0.1	1910	800	455	0.50
	0.2	1860	820	467	0.52
	0.3	1815	850	481	0.53
	0.4	1770	875	498	0.55
	0.5	1730	900	509	0.57
	0.6	1680	925	523	0.58
	0.7	1640	955	536	0.60
	0.8	1595	985	552	0.62
T5	0.1	-	-	-	-
	0.2	1995	870	557	0.62
	0.3	1955	895	571	0.64
	0.4	1905	915	588	0.65
	0.5	1870	940	601	0.67
	0.6	1835	965	617	0.69
	0.7	1790	990	629	0.71
	0.8	1750	1010	645	0.72

* In DSG0363D 60K ULN, DSG0363D 80K ULN, DSG0363D 100K ULN, DSG0364D 60K ULN, DSG0364D 80K ULN, DSG0364D 100K ULN, DSG0481D 80K ULN, DSG0481D 100K ULN, DSG0483D 80K ULN, DSG0483D 100K ULN, DSG0484D 80K ULN, DSG0484D 100K ULN, DSG0601D 80K ULN, DSG0601D 100K ULN, DSG0603D 80K ULN, DSG0603D 100K ULN, DSG0604D 80K ULN, AND DSG0604D 100K ULN DOWNSHOT & HORIZONTAL Tables, T1 values are for fan mode only

** IN DSG0363D 60K ULN, DSG0363D 80K ULN, DSG0363D 100K ULN, DSG0364D 60K ULN, DSG0364D 80K ULN, DSG0364D 100K ULN, DSG0481D 80K ULN, DSG0481D 100K ULN, DSG0483D 80K ULN, DSG0483D 100K ULN, DSG0484D 80K ULN, DSG0484D 100K ULN, DSG0601D 80K ULN, DSG0601D 100K ULN, DSG0603D 80K ULN, DSG0603D 100K ULN, DSG0604D 80K ULN, AND DSG0604D 100K ULN DOWNSHOT & HORIZONTAL Tables, T3 values are for heat mode only

DSG0481D 100K ULN DOWNSHOT

SPEED TAP	EXTERNAL STATIC PRESSURE (ESP) in w. c.	AIRFLOW (CFM)	RPM	WATTS	BHP
T1 *	0.1	1075	575	137	0.14
	0.2	1015	615	144	0.15
	0.3	960	655	154	0.16
	0.4	925	705	162	0.17
	0.5	840	745	173	0.18
	0.6	-	-	-	-
	0.7	-	-	-	-
	0.8	-	-	-	-
T2	0.1	1725	800	415	0.45
	0.2	1675	830	426	0.47
	0.3	1630	855	440	0.48
	0.4	1585	885	456	0.50
	0.5	1540	915	469	0.52
	0.6	1495	945	484	0.53
	0.7	1450	975	495	0.55
	0.8	1405	1005	512	0.57
T3 **	0.1	1475	715	288	0.31
	0.2	1425	745	298	0.32
	0.3	1375	780	310	0.33
	0.4	1335	815	324	0.35
	0.5	1275	845	334	0.36
	0.6	1215	880	347	0.38
	0.7	1150	915	357	0.39
	0.8	1095	950	371	0.41
T4	0.1	1830	840	479	0.53
	0.2	1780	865	492	0.54
	0.3	1735	895	506	0.56
	0.4	1695	920	524	0.58
	0.5	1655	945	536	0.59
	0.6	1610	975	551	0.61
	0.7	1570	1005	564	0.63
	0.8	1525	1035	581	0.65
T5	0.1	1895	865	524	0.58
	0.2	1850	890	538	0.60
	0.3	1805	915	553	0.61
	0.4	1760	940	570	0.63
	0.5	1725	970	584	0.65
	0.6	1685	995	599	0.67
	0.7	1645	1020	612	0.68
	0.8	1605	1050	629	0.70

DSG0481D 100K ULN HORIZONTAL

SPEED TAP	EXTERNAL STATIC PRESSURE (ESP) in w. c.	AIRFLOW (CFM)	RPM	WATTS	BHP
T1 *	0.1	1125	545	130	0.13
	0.2	1060	585	137	0.14
	0.3	1005	620	146	0.15
	0.4	965	670	154	0.16
	0.5	880	710	164	0.17
	0.6	-	-	-	-
	0.7	-	-	-	-
	0.8	-	-	-	-
T2	0.1	1800	760	394	0.43
	0.2	1750	790	405	0.45
	0.3	1705	810	418	0.46
	0.4	1655	840	433	0.48
	0.5	1610	870	445	0.49
	0.6	1565	900	459	0.51
	0.7	1515	925	469	0.52
	0.8	1470	955	487	0.54
T3 **	0.1	1540	680	274	0.29
	0.2	1490	710	283	0.30
	0.3	1435	740	295	0.32
	0.4	1395	775	308	0.33
	0.5	1330	805	317	0.34
	0.6	1270	835	330	0.36
	0.7	1200	870	339	0.37
	0.8	1145	905	352	0.39
T4	0.1	1910	800	455	0.50
	0.2	1860	820	467	0.52
	0.3	1815	850	481	0.53
	0.4	1770	875	498	0.55
	0.5	1730	900	509	0.57
	0.6	1680	925	523	0.58
	0.7	1640	955	536	0.60
	0.8	1595	985	552	0.62
T5	0.1	1980	820	498	0.55
	0.2	1935	845	511	0.57
	0.3	1885	870	525	0.58
	0.4	1840	895	542	0.60
	0.5	1805	920	555	0.62
	0.6	1760	945	569	0.63
	0.7	1720	970	581	0.65
	0.8	1675	1000	598	0.67

* In DSG0363D 60K ULN, DSG0363D 80K ULN, DSG0363D 100K ULN, DSG0364D 60K ULN, DSG0364D 80K ULN, DSG0364D 100K ULN, DSG0481D 80K ULN, DSG0481D 100K ULN, DSG0483D 80K ULN, DSG0483D 100K ULN, DSG0484D 80K ULN, DSG0484D 100K ULN, DSG0601D 80K ULN, DSG0601D 100K ULN, DSG0603D 80K ULN, DSG0603D 100K ULN, DSG0604D 80K ULN, AND DSG0604D 100K ULN DOWNSHOT & HORIZONTAL Tables, T1 values are for fan mode only

** IN DSG0363D 60K ULN, DSG0363D 80K ULN, DSG0363D 100K ULN, DSG0364D 60K ULN, DSG0364D 80K ULN, DSG0364D 100K ULN, DSG0481D 80K ULN, DSG0481D 100K ULN, DSG0483D 80K ULN, DSG0483D 100K ULN, DSG0484D 80K ULN, DSG0484D 100K ULN, DSG0601D 80K ULN, DSG0601D 100K ULN, DSG0603D 80K ULN, DSG0603D 100K ULN, DSG0604D 80K ULN, AND DSG0604D 100K ULN DOWNSHOT & HORIZONTAL Tables, T3 values are for heat mode only

DSG0483D 80K ULN DOWNSHOT

SPEED TAP	EXTERNAL STATIC PRESSURE (ESP) in w. c.	AIRFLOW (CFM)	RPM	WATTS	BHP
T1 *	0.1	1205	620	179	0.18
	0.2	1145	655	187	0.19
	0.3	1090	695	198	0.21
	0.4	1055	735	208	0.22
	0.5	980	780	218	0.23
	0.6	895	815	228	0.24
	0.7	815	855	237	0.25
	0.8	-	-	-	-
T2	0.1	1725	800	415	0.45
	0.2	1675	830	426	0.47
	0.3	1630	855	440	0.48
	0.4	1585	885	456	0.50
	0.5	1540	915	468	0.52
	0.6	1500	945	484	0.53
	0.7	1450	975	495	0.55
	0.8	1405	1005	512	0.57
T3 **	0.1	1460	705	280	0.30
	0.2	1405	740	289	0.31
	0.3	1355	770	301	0.32
	0.4	1315	810	315	0.34
	0.5	1255	840	325	0.35
	0.6	1190	875	338	0.37
	0.7	1130	910	348	0.38
	0.8	1070	945	362	0.40
T4	0.1	1830	840	479	0.53
	0.2	1780	865	492	0.54
	0.3	1735	895	506	0.56
	0.4	1695	920	524	0.58
	0.5	1655	945	536	0.59
	0.6	1610	975	551	0.61
	0.7	1570	1005	564	0.63
	0.8	1525	1035	581	0.65
T5	0.1	1895	865	524	0.58
	0.2	1850	890	538	0.60
	0.3	1805	915	553	0.61
	0.4	1760	940	570	0.63
	0.5	1725	970	584	0.65
	0.6	1685	995	599	0.67
	0.7	1645	1020	612	0.68
	0.8	1605	1050	629	0.70

DSG0483D 80K ULN HORIZONTAL

SPEED TAP	EXTERNAL STATIC PRESSURE (ESP) in w. c.	AIRFLOW (CFM)	RPM	WATTS	BHP
T1 *	0.1	1260	590	170	0.17
	0.2	1195	620	178	0.18
	0.3	1140	660	188	0.19
	0.4	1100	700	198	0.21
	0.5	1025	740	207	0.22
	0.6	935	775	217	0.23
	0.7	850	810	225	0.24
	0.8	-	-	-	-
T2	0.1	1800	760	394	0.43
	0.2	1750	790	405	0.45
	0.3	1705	810	418	0.46
	0.4	1655	840	433	0.48
	0.5	1610	870	445	0.49
	0.6	1565	900	459	0.51
	0.7	1515	925	469	0.52
	0.8	1470	955	486	0.54
T3 **	0.1	1525	670	266	0.28
	0.2	1470	705	275	0.30
	0.3	1415	730	286	0.31
	0.4	1375	770	299	0.32
	0.5	1310	800	309	0.34
	0.6	1245	830	321	0.35
	0.7	1180	865	331	0.36
	0.8	1120	900	344	0.38
T4	0.1	1910	800	455	0.50
	0.2	1860	820	467	0.52
	0.3	1815	850	481	0.53
	0.4	1770	875	498	0.55
	0.5	1730	900	509	0.57
	0.6	1680	925	523	0.58
	0.7	1640	955	536	0.60
	0.8	1595	985	552	0.62
T5	0.1	1980	820	498	0.55
	0.2	1935	845	511	0.57
	0.3	1885	870	525	0.58
	0.4	1840	895	542	0.60
	0.5	1805	920	555	0.62
	0.6	1760	945	569	0.63
	0.7	1720	970	581	0.65
	0.8	1675	1000	598	0.67

* In DSG0363D 60K ULN, DSG0363D 80K ULN, DSG0363D 100K ULN, DSG0364D 60K ULN, DSG0364D 80K ULN, DSG0364D 100K ULN, DSG0481D 80K ULN, DSG0481D 100K ULN, DSG0483D 80K ULN, DSG0483D 100K ULN, DSG0484D 80K ULN, DSG0484D 100K ULN, DSG0601D 80K ULN, DSG0601D 100K ULN, DSG0603D 80K ULN, DSG0603D 100K ULN, DSG0604D 80K ULN, AND DSG0604D 100K ULN DOWNSHOT & HORIZONTAL Tables, T1 values are for fan mode only

** IN DSG0363D 60K ULN, DSG0363D 80K ULN, DSG0363D 100K ULN, DSG0364D 60K ULN, DSG0364D 80K ULN, DSG0364D 100K ULN, DSG0481D 80K ULN, DSG0481D 100K ULN, DSG0483D 80K ULN, DSG0483D 100K ULN, DSG0484D 80K ULN, DSG0484D 100K ULN, DSG0601D 80K ULN, DSG0601D 100K ULN, DSG0603D 80K ULN, DSG0603D 100K ULN, DSG0604D 80K ULN, AND DSG0604D 100K ULN DOWNSHOT & HORIZONTAL Tables, T3 values are for heat mode only

DSG0483D 100K ULN DOWNSHOT

SPEED TAP	EXTERNAL STATIC PRESSURE (ESP) in w. c.	AIRFLOW (CFM)	RPM	WATTS	BHP
T1 *	0.1	1205	620	179	0.18
	0.2	1145	655	187	0.19
	0.3	1090	695	198	0.21
	0.4	1055	735	208	0.22
	0.5	980	780	218	0.23
	0.6	895	815	228	0.24
	0.7	815	855	237	0.25
	0.8	-	-	-	-
T2	0.1	1725	800	415	0.45
	0.2	1675	830	426	0.47
	0.3	1630	855	440	0.48
	0.4	1585	885	456	0.50
	0.5	1540	915	469	0.52
	0.6	1495	945	484	0.53
	0.7	1450	975	495	0.55
	0.8	1405	1005	512	0.57
T3 **	0.1	1475	715	288	0.31
	0.2	1425	745	298	0.32
	0.3	1375	780	310	0.33
	0.4	1335	815	324	0.35
	0.5	1275	845	334	0.36
	0.6	1215	880	347	0.38
	0.7	1150	915	357	0.39
	0.8	1095	950	371	0.41
T4	0.1	1830	840	479	0.53
	0.2	1780	865	492	0.54
	0.3	1735	895	506	0.56
	0.4	1695	920	524	0.58
	0.5	1655	945	536	0.59
	0.6	1610	975	551	0.61
	0.7	1570	1005	564	0.63
	0.8	1525	1035	581	0.65
T5	0.1	1895	865	524	0.58
	0.2	1850	890	538	0.60
	0.3	1805	915	553	0.61
	0.4	1760	940	570	0.63
	0.5	1725	970	584	0.65
	0.6	1685	995	599	0.67
	0.7	1645	1020	612	0.68
	0.8	1605	1050	629	0.70

DSG0483D 100K ULN HORIZONTAL

SPEED TAP	EXTERNAL STATIC PRESSURE (ESP) in w. c.	AIRFLOW (CFM)	RPM	WATTS	BHP
T1 *	0.1	1260	590	170	0.17
	0.2	1195	620	178	0.18
	0.3	1140	660	188	0.19
	0.4	1100	700	198	0.21
	0.5	1025	740	207	0.22
	0.6	935	775	217	0.23
	0.7	850	810	225	0.24
	0.8	-	-	-	-
T2	0.1	1800	760	394	0.43
	0.2	1750	790	405	0.45
	0.3	1705	810	418	0.46
	0.4	1655	840	433	0.48
	0.5	1610	870	445	0.49
	0.6	1565	900	459	0.51
	0.7	1515	925	469	0.52
	0.8	1470	955	487	0.54
T3 **	0.1	1540	680	274	0.29
	0.2	1490	710	283	0.30
	0.3	1435	740	295	0.32
	0.4	1395	775	308	0.33
	0.5	1330	805	317	0.34
	0.6	1270	835	330	0.36
	0.7	1200	870	339	0.37
	0.8	1145	905	352	0.39
T4	0.1	1910	800	455	0.50
	0.2	1860	820	467	0.52
	0.3	1815	850	481	0.53
	0.4	1770	875	498	0.55
	0.5	1730	900	509	0.57
	0.6	1680	925	523	0.58
	0.7	1640	955	536	0.60
	0.8	1595	985	552	0.62
T5	0.1	1980	820	498	0.55
	0.2	1935	845	511	0.57
	0.3	1885	870	525	0.58
	0.4	1840	895	542	0.60
	0.5	1805	920	555	0.62
	0.6	1760	945	569	0.63
	0.7	1720	970	581	0.65
	0.8	1675	1000	598	0.67

* In DSG0363D 60K ULN, DSG0363D 80K ULN, DSG0363D 100K ULN, DSG0364D 60K ULN, DSG0364D 80K ULN, DSG0364D 100K ULN, DSG0481D 80K ULN, DSG0481D 100K ULN, DSG0483D 80K ULN, DSG0483D 100K ULN, DSG0484D 80K ULN, DSG0484D 100K ULN, DSG0601D 80K ULN, DSG0601D 100K ULN, DSG0603D 80K ULN, DSG0603D 100K ULN, DSG0604D 80K ULN, AND DSG0604D 100K ULN DOWNSHOT & HORIZONTAL Tables, T1 values are for fan mode only

** IN DSG0363D 60K ULN, DSG0363D 80K ULN, DSG0363D 100K ULN, DSG0364D 60K ULN, DSG0364D 80K ULN, DSG0364D 100K ULN, DSG0481D 80K ULN, DSG0481D 100K ULN, DSG0483D 80K ULN, DSG0483D 100K ULN, DSG0484D 80K ULN, DSG0484D 100K ULN, DSG0601D 80K ULN, DSG0601D 100K ULN, DSG0603D 80K ULN, DSG0603D 100K ULN, DSG0604D 80K ULN, AND DSG0604D 100K ULN DOWNSHOT & HORIZONTAL Tables, T3 values are for heat mode only

DSG0484D 80K ULN DOWNSHOT

SPEED TAP	EXTERNAL STATIC PRESSURE (ESP) in w. c.	AIRFLOW (CFM)	RPM	WATTS	BHP
T1 *	0.1	1230	640	191	0.20
	0.2	1190	665	200	0.21
	0.3	1115	705	210	0.22
	0.4	1070	750	215	0.24
	0.5	1020	780	231	0.25
	0.6	965	820	240	0.26
	0.7	900	870	253	0.27
	0.8	835	895	261	0.28
T2	0.1	1740	805	415	0.46
	0.2	1710	830	426	0.47
	0.3	1640	860	441	0.49
	0.4	1610	890	452	0.50
	0.5	1580	910	462	0.52
	0.6	1530	940	479	0.53
	0.7	1485	975	491	0.55
	0.8	1435	1000	503	0.57
T3 **	0.1	1340	675	231	0.25
	0.2	1305	700	241	0.26
	0.3	1230	740	252	0.27
	0.4	1185	780	259	0.28
	0.5	1140	805	273	0.29
	0.6	1090	845	284	0.31
	0.7	1025	890	296	0.32
	0.8	970	915	305	0.33
T4	0.1	1815	835	461	0.51
	0.2	1790	860	472	0.52
	0.3	1725	885	488	0.54
	0.4	1690	915	500	0.56
	0.5	1660	935	510	0.57
	0.6	1610	965	527	0.59
	0.7	1570	995	539	0.61
	0.8	1525	1020	551	0.62
T5	0.1	1880	855	502	0.55
	0.2	1855	880	513	0.57
	0.3	1795	905	529	0.59
	0.4	1755	935	542	0.61
	0.5	1730	955	552	0.62
	0.6	1680	985	570	0.64
	0.7	1640	1010	582	0.65
	0.8	1600	1035	594	0.67

DSG0484D 80K ULN HORIZONTAL

SPEED TAP	EXTERNAL STATIC PRESSURE (ESP) in w. c.	AIRFLOW (CFM)	RPM	WATTS	BHP
T1 *	0.1	1265	610	181	0.19
	0.2	1225	630	190	0.20
	0.3	1150	670	200	0.21
	0.4	1100	715	204	0.22
	0.5	1050	740	219	0.23
	0.6	995	780	228	0.25
	0.7	925	825	240	0.26
	0.8	860	850	248	0.27
T2	0.1	1790	765	394	0.43
	0.2	1760	790	405	0.45
	0.3	1695	815	419	0.46
	0.4	1660	845	430	0.48
	0.5	1625	865	439	0.49
	0.6	1575	895	455	0.51
	0.7	1530	925	467	0.52
	0.8	1480	950	477	0.54
T3 **	0.1	1380	640	219	0.23
	0.2	1345	665	229	0.24
	0.3	1265	705	239	0.26
	0.4	1220	740	246	0.27
	0.5	1175	765	259	0.28
	0.6	1125	805	270	0.29
	0.7	1055	845	281	0.31
	0.8	1000	870	290	0.32
T4	0.1	1870	795	438	0.48
	0.2	1845	815	448	0.50
	0.3	1775	840	464	0.51
	0.4	1740	870	475	0.53
	0.5	1710	890	485	0.54
	0.6	1660	915	501	0.56
	0.7	1615	945	512	0.58
	0.8	1570	970	523	0.59
T5	0.1	1935	810	477	0.52
	0.2	1910	835	487	0.54
	0.3	1850	860	503	0.56
	0.4	1810	890	515	0.58
	0.5	1780	905	524	0.59
	0.6	1730	935	542	0.61
	0.7	1690	960	553	0.62
	0.8	1650	985	564	0.64

* In DSG0363D 60K ULN, DSG0363D 80K ULN, DSG0363D 100K ULN, DSG0364D 60K ULN, DSG0364D 80K ULN, DSG0364D 100K ULN, DSG0481D 80K ULN, DSG0481D 100K ULN, DSG0483D 80K ULN, DSG0483D 100K ULN, DSG0484D 80K ULN, DSG0484D 100K ULN, DSG0601D 80K ULN, DSG0601D 100K ULN, DSG0603D 80K ULN, DSG0603D 100K ULN, DSG0604D 80K ULN, AND DSG0604D 100K ULN DOWNSHOT & HORIZONTAL Tables, T1 values are for fan mode only

** IN DSG0363D 60K ULN, DSG0363D 80K ULN, DSG0363D 100K ULN, DSG0364D 60K ULN, DSG0364D 80K ULN, DSG0364D 100K ULN, DSG0481D 80K ULN, DSG0481D 100K ULN, DSG0483D 80K ULN, DSG0483D 100K ULN, DSG0484D 80K ULN, DSG0484D 100K ULN, DSG0601D 80K ULN, DSG0601D 100K ULN, DSG0603D 80K ULN, DSG0603D 100K ULN, DSG0604D 80K ULN, AND DSG0604D 100K ULN DOWNSHOT & HORIZONTAL Tables, T3 values are for heat mode only

DSG0484D 100K ULN DOWNSHOT

SPEED TAP	EXTERNAL STATIC PRESSURE (ESP) in w. c.	AIRFLOW (CFM)	RPM	WATTS	BHP
T1 *	0.1	1070	585	137	0.14
	0.2	1020	615	146	0.15
	0.3	940	660	154	0.16
	0.4	895	705	158	0.17
	0.5	840	740	175	0.18
	0.6	785	785	182	0.19
	0.7	710	835	196	0.20
	0.8	640	860	202	0.21
T2	0.1	1740	805	415	0.46
	0.2	1715	830	426	0.47
	0.3	1645	860	441	0.49
	0.4	1610	890	452	0.50
	0.5	1580	910	462	0.51
	0.6	1530	940	479	0.53
	0.7	1485	975	491	0.55
	0.8	1435	1000	502	0.57
T3 **	0.1	1180	625	172	0.18
	0.2	1135	650	182	0.19
	0.3	1055	690	191	0.20
	0.4	1010	735	196	0.21
	0.5	960	765	211	0.22
	0.6	905	805	220	0.23
	0.7	835	855	233	0.25
	0.8	770	885	241	0.26
T4	0.1	1815	835	461	0.51
	0.2	1790	860	472	0.52
	0.3	1725	885	488	0.54
	0.4	1690	915	500	0.56
	0.5	1660	935	510	0.57
	0.6	1610	965	527	0.59
	0.7	1570	995	539	0.61
	0.8	1525	1020	551	0.62
T5	0.1	1880	855	502	0.55
	0.2	1855	880	513	0.57
	0.3	1795	905	529	0.59
	0.4	1755	935	542	0.61
	0.5	1730	955	552	0.62
	0.6	1680	985	570	0.64
	0.7	1640	1010	582	0.65
	0.8	1600	1035	594	0.67

DSG0484D 100K ULN HORIZONTAL

SPEED TAP	EXTERNAL STATIC PRESSURE (ESP) in w. c.	AIRFLOW (CFM)	RPM	WATTS	BHP
T1 *	0.1	1100	555	130	0.13
	0.2	1050	585	139	0.14
	0.3	970	625	146	0.15
	0.4	920	670	150	0.16
	0.5	865	705	166	0.17
	0.6	810	745	173	0.18
	0.7	730	795	186	0.19
	0.8	660	815	192	0.20
T2	0.1	1795	765	394	0.43
	0.2	1765	790	405	0.45
	0.3	1695	815	419	0.46
	0.4	1660	845	430	0.48
	0.5	1625	865	439	0.49
	0.6	1575	895	455	0.51
	0.7	1530	925	467	0.52
	0.8	1480	950	477	0.54
T3 **	0.1	1215	595	163	0.17
	0.2	1170	620	173	0.18
	0.3	1085	655	181	0.19
	0.4	1040	700	186	0.20
	0.5	990	725	200	0.21
	0.6	930	765	209	0.22
	0.7	860	810	221	0.24
	0.8	795	840	229	0.24
T4	0.1	1870	795	438	0.48
	0.2	1845	815	448	0.50
	0.3	1775	840	464	0.51
	0.4	1740	870	475	0.53
	0.5	1710	890	485	0.54
	0.6	1660	915	501	0.56
	0.7	1615	945	512	0.58
	0.8	1570	970	523	0.59
T5	0.1	1935	810	477	0.52
	0.2	1910	835	487	0.54
	0.3	1850	860	503	0.56
	0.4	1810	890	515	0.58
	0.5	1780	905	524	0.59
	0.6	1730	935	542	0.61
	0.7	1690	960	553	0.62
	0.8	1650	985	564	0.64

* In DSG0363D 60K ULN, DSG0363D 80K ULN, DSG0363D 100K ULN, DSG0364D 60K ULN, DSG0364D 80K ULN, DSG0364D 100K ULN, DSG0481D 80K ULN, DSG0481D 100K ULN, DSG0483D 80K ULN, DSG0483D 100K ULN, DSG0484D 80K ULN, DSG0484D 100K ULN, DSG0601D 80K ULN, DSG0601D 100K ULN, DSG0603D 80K ULN, DSG0603D 100K ULN, DSG0604D 80K ULN, AND DSG0604D 100K ULN DOWNSHOT & HORIZONTAL Tables, T1 values are for fan mode only

** IN DSG0363D 60K ULN, DSG0363D 80K ULN, DSG0363D 100K ULN, DSG0364D 60K ULN, DSG0364D 80K ULN, DSG0364D 100K ULN, DSG0481D 80K ULN, DSG0481D 100K ULN, DSG0483D 80K ULN, DSG0483D 100K ULN, DSG0484D 80K ULN, DSG0484D 100K ULN, DSG0601D 80K ULN, DSG0601D 100K ULN, DSG0603D 80K ULN, DSG0603D 100K ULN, DSG0604D 80K ULN, AND DSG0604D 100K ULN DOWNSHOT & HORIZONTAL Tables, T3 values are for heat mode only

DSG0601D 80K ULN DOWNSHOT

SPEED TAP	EXTERNAL STATIC PRESSURE (ESP) in w. c.	AIRFLOW (CFM)	RPM	WATTS	BHP
T1 *	0.1	1075	575	137	0.14
	0.2	1015	615	144	0.15
	0.3	960	655	154	0.16
	0.4	925	705	162	0.17
	0.5	840	745	173	0.18
	0.6	-	-	-	-
	0.7	-	-	-	-
	0.8	-	-	-	-
T2	0.1	1995	900	591	0.65
	0.2	1955	925	606	0.67
	0.3	1910	955	621	0.69
	0.4	1870	975	639	0.71
	0.5	1830	1000	653	0.73
	0.6	1800	1025	669	0.75
	0.7	1765	1050	684	0.77
	0.8	1720	1075	701	0.79
T3 **	0.1	1635	770	366	0.40
	0.2	1585	800	377	0.41
	0.3	1540	830	390	0.43
	0.4	1495	860	406	0.44
	0.5	1450	890	417	0.46
	0.6	1395	920	431	0.47
	0.7	1345	955	442	0.49
	0.8	1295	985	458	0.51
T4	0.1	2200	980	799	0.89
	0.2	2155	1005	817	0.91
	0.3	2115	1030	833	0.93
	0.4	2075	1050	850	0.95
	0.5	2040	1075	870	0.97
	0.6	2005	1100	885	0.99
	0.7	1965	1120	903	1.01
	0.8	1925	1140	915	1.03
T5	0.1	2250	1005	860	0.96
	0.2	2205	1025	879	0.98
	0.3	2165	1050	896	1.00
	0.4	2130	1075	913	1.02
	0.5	2090	1095	934	1.04
	0.6	2055	1120	949	1.07
	0.7	2015	1140	950	1.09
	0.8	1970	1155	950	1.10

DSG0601D 80K ULN HORIZONTAL

SPEED TAP	EXTERNAL STATIC PRESSURE (ESP) in w. c.	AIRFLOW (CFM)	RPM	WATTS	BHP
T1 *	0.1	1125	545	130	0.13
	0.2	1060	585	137	0.14
	0.3	1005	620	146	0.15
	0.4	965	670	154	0.16
	0.5	880	710	164	0.17
	0.6	-	-	-	-
	0.7	-	-	-	-
	0.8	-	-	-	-
T2	0.1	2085	855	561	0.62
	0.2	2040	875	575	0.64
	0.3	1990	905	591	0.66
	0.4	1955	930	607	0.68
	0.5	1915	950	621	0.69
	0.6	1880	970	635	0.71
	0.7	1845	1000	650	0.73
	0.8	1800	1020	666	0.75
T3 **	0.1	1710	730	348	0.38
	0.2	1655	760	358	0.39
	0.3	1610	790	371	0.41
	0.4	1560	815	386	0.42
	0.5	1515	845	396	0.43
	0.6	1460	875	409	0.45
	0.7	1405	905	420	0.47
	0.8	1355	935	435	0.48
T4	0.1	2300	930	759	0.84
	0.2	2250	955	776	0.86
	0.3	2210	980	791	0.89
	0.4	2170	1000	808	0.90
	0.5	2130	1020	827	0.92
	0.6	2095	1045	841	0.95
	0.7	2055	1065	858	0.96
	0.8	2010	1085	869	0.98
T5	0.1	2350	955	817	0.91
	0.2	2305	975	835	0.93
	0.3	2260	1000	851	0.95
	0.4	2225	1020	867	0.97
	0.5	2185	1040	887	0.99
	0.6	2145	1065	902	1.01
	0.7	2105	1085	903	1.03
	0.8	2060	1095	903	1.04

* In DSG0363D 60K ULN, DSG0363D 80K ULN, DSG0363D 100K ULN, DSG0364D 60K ULN, DSG0364D 80K ULN, DSG0364D 100K ULN, DSG0481D 80K ULN, DSG0481D 100K ULN, DSG0483D 80K ULN, DSG0483D 100K ULN, DSG0484D 80K ULN, DSG0484D 100K ULN, DSG0601D 80K ULN, DSG0601D 100K ULN, DSG0603D 80K ULN, DSG0603D 100K ULN, DSG0604D 80K ULN, AND DSG0604D 100K ULN DOWNSHOT & HORIZONTAL Tables, T1 values are for fan mode only

** IN DSG0363D 60K ULN, DSG0363D 80K ULN, DSG0363D 100K ULN, DSG0364D 60K ULN, DSG0364D 80K ULN, DSG0364D 100K ULN, DSG0481D 80K ULN, DSG0481D 100K ULN, DSG0483D 80K ULN, DSG0483D 100K ULN, DSG0484D 80K ULN, DSG0484D 100K ULN, DSG0601D 80K ULN, DSG0601D 100K ULN, DSG0603D 80K ULN, DSG0603D 100K ULN, DSG0604D 80K ULN, AND DSG0604D 100K ULN DOWNSHOT & HORIZONTAL Tables, T3 values are for heat mode only

DSG0601D 100K ULN DOWNSHOT

SPEED TAP	EXTERNAL STATIC PRESSURE (ESP) in w. c.	AIRFLOW (CFM)	RPM	WATTS	BHP
T1 *	0.1	1075	575	137	0.14
	0.2	1015	615	144	0.15
	0.3	960	655	154	0.16
	0.4	925	705	162	0.17
	0.5	840	745	173	0.18
	0.6	-	-	-	-
	0.7	-	-	-	-
	0.8	-	-	-	-
T2	0.1	1990	900	593	0.66
	0.2	1945	915	609	0.67
	0.3	1900	955	624	0.70
	0.4	1860	980	641	0.72
	0.5	1820	995	656	0.73
	0.6	1795	1020	670	0.75
	0.7	1755	1050	686	0.77
	0.8	1710	1075	703	0.79
T3 **	0.1	1860	850	502	0.55
	0.2	1815	880	515	0.57
	0.3	1770	905	530	0.59
	0.4	1730	930	547	0.60
	0.5	1690	960	560	0.62
	0.6	1650	985	576	0.64
	0.7	1610	1015	588	0.66
	0.8	1565	1040	605	0.68
T4	0.1	2200	980	799	0.89
	0.2	2155	1005	817	0.91
	0.3	2115	1030	833	0.93
	0.4	2075	1050	850	0.95
	0.5	2040	1075	870	0.97
	0.6	2005	1100	885	0.99
	0.7	1965	1120	903	1.01
	0.8	1925	1140	915	1.03
T5	0.1	2250	1005	860	0.96
	0.2	2205	1025	879	0.98
	0.3	2165	1050	896	1.00
	0.4	2130	1075	913	1.02
	0.5	2090	1095	934	1.04
	0.6	2055	1120	949	1.07
	0.7	2015	1140	950	1.09
	0.8	1970	1155	950	1.10

DSG0601D 100K ULN HORIZONTAL

SPEED TAP	EXTERNAL STATIC PRESSURE (ESP) in w. c.	AIRFLOW (CFM)	RPM	WATTS	BHP
T1 *	0.1	1125	545	130	0.13
	0.2	1060	585	137	0.14
	0.3	1005	620	146	0.15
	0.4	965	670	154	0.16
	0.5	880	710	164	0.17
	0.6	-	-	-	-
	0.7	-	-	-	-
	0.8	-	-	-	-
T2	0.1	2075	845	563	0.62
	0.2	2040	870	578	0.64
	0.3	1980	910	593	0.66
	0.4	1940	935	609	0.68
	0.5	1910	945	623	0.69
	0.6	1870	970	636	0.71
	0.7	1835	1000	653	0.73
	0.8	1790	1015	669	0.74
T3 **	0.1	1945	810	477	0.53
	0.2	1895	835	489	0.54
	0.3	1850	860	504	0.56
	0.4	1810	885	520	0.58
	0.5	1765	910	532	0.59
	0.6	1725	935	547	0.61
	0.7	1680	965	559	0.63
	0.8	1635	990	575	0.64
T4	0.1	2300	930	759	0.84
	0.2	2250	955	776	0.86
	0.3	2210	980	791	0.89
	0.4	2170	1000	808	0.90
	0.5	2130	1020	827	0.92
	0.6	2095	1045	841	0.95
	0.7	2055	1065	858	0.96
	0.8	2010	1085	869	0.98
T5	0.1	2350	955	817	0.91
	0.2	2305	975	835	0.93
	0.3	2260	1000	851	0.95
	0.4	2225	1020	867	0.97
	0.5	2185	1040	887	0.99
	0.6	2145	1065	902	1.01
	0.7	2105	1085	903	1.03
	0.8	2060	1095	903	1.04

* In DSG0363D 60K ULN, DSG0363D 80K ULN, DSG0363D 100K ULN, DSG0364D 60K ULN, DSG0364D 80K ULN, DSG0364D 100K ULN, DSG0481D 80K ULN, DSG0481D 100K ULN, DSG0483D 80K ULN, DSG0483D 100K ULN, DSG0484D 80K ULN, DSG0484D 100K ULN, DSG0601D 80K ULN, DSG0601D 100K ULN, DSG0603D 80K ULN, DSG0603D 100K ULN, DSG0604D 80K ULN, AND DSG0604D 100K ULN DOWNSHOT & HORIZONTAL Tables, T1 values are for fan mode only

** IN DSG0363D 60K ULN, DSG0363D 80K ULN, DSG0363D 100K ULN, DSG0364D 60K ULN, DSG0364D 80K ULN, DSG0364D 100K ULN, DSG0481D 80K ULN, DSG0481D 100K ULN, DSG0483D 80K ULN, DSG0483D 100K ULN, DSG0484D 80K ULN, DSG0484D 100K ULN, DSG0601D 80K ULN, DSG0601D 100K ULN, DSG0603D 80K ULN, DSG0603D 100K ULN, DSG0604D 80K ULN, AND DSG0604D 100K ULN DOWNSHOT & HORIZONTAL Tables, T3 values are for heat mode only

DSG0603D 80K ULN DOWNSHOT

SPEED TAP	EXTERNAL STATIC PRESSURE (ESP) in w. c.	AIRFLOW (CFM)	RPM	WATTS	BHP
T1 *	0.1	1550	740	322	0.35
	0.2	1500	770	332	0.36
	0.3	1450	800	345	0.37
	0.4	1410	835	359	0.39
	0.5	1355	865	370	0.40
	0.6	1295	900	383	0.42
	0.7	1240	930	394	0.43
	0.8	1185	965	409	0.45
T2	0.1	1995	900	591	0.65
	0.2	1955	925	606	0.67
	0.3	1910	955	621	0.69
	0.4	1870	975	639	0.71
	0.5	1830	1000	653	0.73
	0.6	1800	1025	669	0.75
	0.7	1765	1050	684	0.77
	0.8	1720	1075	701	0.79
T3 **	0.1	1635	770	366	0.40
	0.2	1585	800	377	0.41
	0.3	1540	830	390	0.43
	0.4	1495	860	406	0.44
	0.5	1450	890	417	0.46
	0.6	1395	920	431	0.47
	0.7	1345	955	442	0.49
	0.8	1295	985	458	0.51
T4	0.1	2200	980	799	0.89
	0.2	2155	1005	817	0.91
	0.3	2115	1030	833	0.93
	0.4	2075	1050	850	0.95
	0.5	2040	1075	870	0.97
	0.6	2005	1100	885	0.99
	0.7	1965	1120	903	1.01
	0.8	1925	1140	915	1.03
T5	0.1	2250	1005	860	0.96
	0.2	2205	1025	879	0.98
	0.3	2165	1050	896	1.00
	0.4	2130	1075	913	1.02
	0.5	2090	1095	934	1.04
	0.6	2055	1120	949	1.07
	0.7	2015	1140	950	1.09
	0.8	1970	1155	950	1.10

DSG0603D 80K ULN HORIZONTAL

SPEED TAP	EXTERNAL STATIC PRESSURE (ESP) in w. c.	AIRFLOW (CFM)	RPM	WATTS	BHP
T1 *	0.1	1620	705	306	0.33
	0.2	1570	730	315	0.34
	0.3	1515	760	328	0.35
	0.4	1475	795	341	0.37
	0.5	1415	820	352	0.38
	0.6	1355	855	364	0.40
	0.7	1295	885	374	0.41
	0.8	1240	915	389	0.43
T2	0.1	2085	855	561	0.62
	0.2	2040	875	575	0.64
	0.3	1990	905	591	0.66
	0.4	1955	930	607	0.68
	0.5	1915	950	621	0.69
	0.6	1880	970	635	0.71
	0.7	1845	1000	650	0.73
	0.8	1800	1020	666	0.75
T3 **	0.1	1710	730	348	0.38
	0.2	1655	760	358	0.39
	0.3	1610	790	371	0.41
	0.4	1560	815	386	0.42
	0.5	1515	845	396	0.43
	0.6	1460	875	409	0.45
	0.7	1405	905	420	0.47
	0.8	1355	935	435	0.48
T4	0.1	2300	930	759	0.84
	0.2	2250	955	776	0.86
	0.3	2210	980	791	0.89
	0.4	2170	1000	808	0.90
	0.5	2130	1020	827	0.92
	0.6	2095	1045	841	0.95
	0.7	2055	1065	858	0.96
	0.8	2010	1085	869	0.98
T5	0.1	2350	955	817	0.91
	0.2	2305	975	835	0.93
	0.3	2260	1000	851	0.95
	0.4	2225	1020	867	0.97
	0.5	2185	1040	887	0.99
	0.6	2145	1065	902	1.01
	0.7	2105	1085	903	1.03
	0.8	2060	1095	903	1.04

* In DSG0363D 60K ULN, DSG0363D 80K ULN, DSG0363D 100K ULN, DSG0364D 60K ULN, DSG0364D 80K ULN, DSG0364D 100K ULN, DSG0481D 80K ULN, DSG0481D 100K ULN, DSG0483D 80K ULN, DSG0483D 100K ULN, DSG0484D 80K ULN, DSG0484D 100K ULN, DSG0601D 80K ULN, DSG0601D 100K ULN, DSG0603D 80K ULN, DSG0603D 100K ULN, DSG0604D 80K ULN, AND DSG0604D 100K ULN DOWNSHOT & HORIZONTAL Tables, T1 values are for fan mode only

** IN DSG0363D 60K ULN, DSG0363D 80K ULN, DSG0363D 100K ULN, DSG0364D 60K ULN, DSG0364D 80K ULN, DSG0364D 100K ULN, DSG0481D 80K ULN, DSG0481D 100K ULN, DSG0483D 80K ULN, DSG0483D 100K ULN, DSG0484D 80K ULN, DSG0484D 100K ULN, DSG0601D 80K ULN, DSG0601D 100K ULN, DSG0603D 80K ULN, DSG0603D 100K ULN, DSG0604D 80K ULN, AND DSG0604D 100K ULN DOWNSHOT & HORIZONTAL Tables, T3 values are for heat mode only

DSG0603D 100K ULN DOWNSHOT

SPEED TAP	EXTERNAL STATIC PRESSURE (ESP) in w. c.	AIRFLOW (CFM)	RPM	WATTS	BHP
T1 *	0.1	1550	740	322	0.35
	0.2	1500	770	332	0.36
	0.3	1450	800	345	0.37
	0.4	1410	835	359	0.39
	0.5	1355	865	370	0.40
	0.6	1295	900	383	0.42
	0.7	1240	930	394	0.43
	0.8	1185	965	409	0.45
T2	0.1	1990	900	593	0.66
	0.2	1945	915	609	0.67
	0.3	1900	955	624	0.70
	0.4	1860	980	641	0.72
	0.5	1820	995	656	0.73
	0.6	1795	1020	670	0.75
	0.7	1755	1050	686	0.77
	0.8	1710	1075	703	0.79
T3 **	0.1	1860	850	502	0.55
	0.2	1815	880	515	0.57
	0.3	1770	905	530	0.59
	0.4	1730	930	547	0.60
	0.5	1690	960	560	0.62
	0.6	1650	985	576	0.64
	0.7	1610	1015	588	0.66
	0.8	1565	1040	605	0.68
T4	0.1	2200	980	799	0.89
	0.2	2155	1005	817	0.91
	0.3	2115	1030	833	0.93
	0.4	2075	1050	850	0.95
	0.5	2040	1075	870	0.97
	0.6	2005	1100	885	0.99
	0.7	1965	1120	903	1.01
	0.8	1925	1140	915	1.03
T5	0.1	2250	1005	860	0.96
	0.2	2205	1025	879	0.98
	0.3	2165	1050	896	1.00
	0.4	2130	1075	913	1.02
	0.5	2090	1095	934	1.04
	0.6	2055	1120	949	1.07
	0.7	2015	1140	950	1.09
	0.8	1970	1155	950	1.10

DSG0603D 100K ULN HORIZONTAL

SPEED TAP	EXTERNAL STATIC PRESSURE (ESP) in w. c.	AIRFLOW (CFM)	RPM	WATTS	BHP
T1 *	0.1	1620	705	306	0.33
	0.2	1570	730	315	0.34
	0.3	1515	760	328	0.35
	0.4	1475	795	341	0.37
	0.5	1415	820	352	0.38
	0.6	1355	855	364	0.40
	0.7	1295	885	374	0.41
	0.8	1240	915	389	0.43
T2	0.1	2075	845	563	0.62
	0.2	2040	870	578	0.64
	0.3	1980	910	593	0.66
	0.4	1940	935	609	0.68
	0.5	1910	945	623	0.69
	0.6	1870	970	636	0.71
	0.7	1835	1000	653	0.73
	0.8	1790	1015	669	0.74
T3 **	0.1	1945	810	477	0.53
	0.2	1895	835	489	0.54
	0.3	1850	860	504	0.56
	0.4	1810	885	520	0.58
	0.5	1765	910	532	0.59
	0.6	1725	935	547	0.61
	0.7	1680	965	559	0.63
	0.8	1635	990	575	0.64
T4	0.1	2300	930	759	0.84
	0.2	2250	955	776	0.86
	0.3	2210	980	791	0.89
	0.4	2170	1000	808	0.90
	0.5	2130	1020	827	0.92
	0.6	2095	1045	841	0.95
	0.7	2055	1065	858	0.96
	0.8	2010	1085	869	0.98
T5	0.1	2350	955	817	0.91
	0.2	2305	975	835	0.93
	0.3	2260	1000	851	0.95
	0.4	2225	1020	867	0.97
	0.5	2185	1040	887	0.99
	0.6	2145	1065	902	1.01
	0.7	2105	1085	903	1.03
	0.8	2060	1095	903	1.04

* In DSG0363D 60K ULN, DSG0363D 80K ULN, DSG0363D 100K ULN, DSG0364D 60K ULN, DSG0364D 80K ULN, DSG0364D 100K ULN, DSG0481D 80K ULN, DSG0481D 100K ULN, DSG0483D 80K ULN, DSG0483D 100K ULN, DSG0484D 80K ULN, DSG0484D 100K ULN, DSG0601D 80K ULN, DSG0601D 100K ULN, DSG0603D 80K ULN, DSG0603D 100K ULN, DSG0604D 80K ULN, AND DSG0604D 100K ULN DOWNSHOT & HORIZONTAL Tables, T1 values are for fan mode only

** IN DSG0363D 60K ULN, DSG0363D 80K ULN, DSG0363D 100K ULN, DSG0364D 60K ULN, DSG0364D 80K ULN, DSG0364D 100K ULN, DSG0481D 80K ULN, DSG0481D 100K ULN, DSG0483D 80K ULN, DSG0483D 100K ULN, DSG0484D 80K ULN, DSG0484D 100K ULN, DSG0601D 80K ULN, DSG0601D 100K ULN, DSG0603D 80K ULN, DSG0603D 100K ULN, DSG0604D 80K ULN, AND DSG0604D 100K ULN DOWNSHOT & HORIZONTAL Tables, T3 values are for heat mode only

DSG0604D 80K ULN DOWNSHOT

SPEED TAP	EXTERNAL STATIC PRESSURE (ESP) in w. c.	AIRFLOW (CFM)	RPM	WATTS	BHP
T1 *	0.1	1255	650	198	0.21
	0.2	1210	675	208	0.22
	0.3	1135	715	218	0.23
	0.4	1090	755	223	0.24
	0.5	1045	785	238	0.25
	0.6	990	825	248	0.27
	0.7	925	870	261	0.28
	0.8	860	900	269	0.29
T2	0.1	1990	895	575	0.64
	0.2	1960	915	586	0.65
	0.3	1905	940	604	0.67
	0.4	1875	970	618	0.69
	0.5	1850	985	627	0.70
	0.6	1800	1015	646	0.72
	0.7	1765	1040	659	0.74
	0.8	1725	1060	670	0.76
T3 **	0.1	1615	770	351	0.38
	0.2	1585	790	362	0.39
	0.3	1515	825	375	0.41
	0.4	1475	855	385	0.43
	0.5	1440	880	396	0.44
	0.6	1390	910	411	0.45
	0.7	1340	950	423	0.47
	0.8	1290	970	434	0.48
T4	0.1	2180	960	736	0.81
	0.2	2150	980	746	0.83
	0.3	2105	1005	768	0.85
	0.4	2070	1030	784	0.87
	0.5	2050	1045	793	0.89
	0.6	2005	1075	815	0.91
	0.7	1975	1095	828	0.93
	0.8	1935	1115	839	0.94
T5	0.1	2245	980	797	0.88
	0.2	2210	1000	807	0.89
	0.3	2170	1025	830	0.92
	0.4	2135	1050	847	0.94
	0.5	2115	1065	855	0.95
	0.6	2070	1095	878	0.98
	0.7	2040	1115	892	1.00
	0.8	2005	1130	902	1.01

DSG0604D 80K ULN HORIZONTAL

SPEED TAP	EXTERNAL STATIC PRESSURE (ESP) in w. c.	AIRFLOW (CFM)	RPM	WATTS	BHP
T1 *	0.1	1295	620	188	0.20
	0.2	1245	640	198	0.21
	0.3	1170	680	207	0.22
	0.4	1125	715	212	0.23
	0.5	1075	745	226	0.24
	0.6	1020	785	236	0.25
	0.7	955	825	248	0.27
	0.8	885	855	256	0.28
T2	0.1	2050	850	546	0.61
	0.2	2020	870	556	0.62
	0.3	1965	895	574	0.64
	0.4	1930	920	588	0.66
	0.5	1905	935	596	0.67
	0.6	1855	965	614	0.69
	0.7	1815	990	627	0.71
	0.8	1775	1005	637	0.72
T3 **	0.1	1665	730	333	0.36
	0.2	1635	750	344	0.37
	0.3	1560	785	356	0.39
	0.4	1520	810	366	0.40
	0.5	1485	835	376	0.42
	0.6	1430	865	390	0.43
	0.7	1380	905	402	0.45
	0.8	1330	920	412	0.46
T4	0.1	2245	910	699	0.77
	0.2	2215	930	709	0.79
	0.3	2170	955	730	0.81
	0.4	2130	980	745	0.83
	0.5	2110	995	753	0.84
	0.6	2065	1020	774	0.86
	0.7	2035	1040	787	0.88
	0.8	1995	1060	797	0.90
T5	0.1	2310	930	757	0.83
	0.2	2275	950	767	0.85
	0.3	2235	975	789	0.87
	0.4	2200	1000	805	0.89
	0.5	2180	1010	812	0.90
	0.6	2130	1040	834	0.93
	0.7	2100	1060	847	0.95
	0.8	2065	1075	857	0.96

* In DSG0363D 60K ULN, DSG0363D 80K ULN, DSG0363D 100K ULN, DSG0364D 60K ULN, DSG0364D 80K ULN, DSG0364D 100K ULN, DSG0481D 80K ULN, DSG0481D 100K ULN, DSG0483D 80K ULN, DSG0483D 100K ULN, DSG0484D 80K ULN, DSG0484D 100K ULN, DSG0601D 80K ULN, DSG0601D 100K ULN, DSG0603D 80K ULN, DSG0603D 100K ULN, DSG0604D 80K ULN, AND DSG0604D 100K ULN DOWNSHOT & HORIZONTAL Tables, T1 values are for fan mode only

** IN DSG0363D 60K ULN, DSG0363D 80K ULN, DSG0363D 100K ULN, DSG0364D 60K ULN, DSG0364D 80K ULN, DSG0364D 100K ULN, DSG0481D 80K ULN, DSG0481D 100K ULN, DSG0483D 80K ULN, DSG0483D 100K ULN, DSG0484D 80K ULN, DSG0484D 100K ULN, DSG0601D 80K ULN, DSG0601D 100K ULN, DSG0603D 80K ULN, DSG0603D 100K ULN, DSG0604D 80K ULN, AND DSG0604D 100K ULN DOWNSHOT & HORIZONTAL Tables, T3 values are for heat mode only

DSG0604D 100K ULN DOWNSHOT

SPEED TAP	EXTERNAL STATIC PRESSURE (ESP) in w. c.	AIRFLOW (CFM)	RPM	WATTS	BHP
T1 *	0.1	1125	605	154	0.16
	0.2	1080	630	163	0.17
	0.3	1000	675	172	0.18
	0.4	955	720	176	0.19
	0.5	900	750	193	0.20
	0.6	845	795	201	0.21
	0.7	770	845	214	0.23
	0.8	705	875	221	0.23
T2	0.1	1995	895	574	0.64
	0.2	1965	915	585	0.65
	0.3	1910	940	603	0.67
	0.4	1875	970	617	0.69
	0.5	1850	985	626	0.70
	0.6	1800	1015	646	0.72
	0.7	1765	1040	659	0.74
	0.8	1725	1060	670	0.75
T3 **	0.1	1180	625	172	0.18
	0.2	1135	650	182	0.19
	0.3	1055	690	191	0.20
	0.4	1010	735	196	0.21
	0.5	960	765	211	0.22
	0.6	905	805	220	0.23
	0.7	835	855	233	0.25
	0.8	770	885	241	0.26
T4	0.1	2180	960	736	0.81
	0.2	2150	980	746	0.83
	0.3	2105	1005	768	0.85
	0.4	2070	1030	784	0.87
	0.5	2050	1045	793	0.89
	0.6	2005	1075	815	0.91
	0.7	1975	1095	828	0.93
	0.8	1935	1115	839	0.94
T5	0.1	2245	980	797	0.88
	0.2	2210	1000	807	0.89
	0.3	2170	1025	830	0.92
	0.4	2135	1050	847	0.94
	0.5	2115	1065	855	0.95
	0.6	2070	1095	878	0.98
	0.7	2040	1115	892	1.00
	0.8	2005	1130	902	1.01

DSG0604D 100K ULN HORIZONTAL

SPEED TAP	EXTERNAL STATIC PRESSURE (ESP) in w. c.	AIRFLOW (CFM)	RPM	WATTS	BHP
T1 *	0.1	1160	575	146	0.15
	0.2	1110	600	155	0.16
	0.3	1030	640	163	0.17
	0.4	985	685	167	0.18
	0.5	925	715	183	0.19
	0.6	870	755	191	0.20
	0.7	795	805	203	0.21
	0.8	725	830	210	0.22
T2	0.1	2055	850	546	0.61
	0.2	2025	870	556	0.62
	0.3	1965	895	573	0.64
	0.4	1930	920	587	0.65
	0.5	1905	935	595	0.67
	0.6	1855	965	613	0.69
	0.7	1815	990	626	0.70
	0.8	1775	1005	636	0.72
T3 **	0.1	1215	595	163	0.17
	0.2	1170	620	173	0.18
	0.3	1085	655	181	0.19
	0.4	1040	700	186	0.20
	0.5	990	725	200	0.21
	0.6	930	765	209	0.22
	0.7	860	810	221	0.24
	0.8	795	840	229	0.24
T4	0.1	2245	910	699	0.77
	0.2	2215	930	709	0.79
	0.3	2170	955	730	0.81
	0.4	2130	980	745	0.83
	0.5	2110	995	753	0.84
	0.6	2065	1020	774	0.86
	0.7	2035	1040	787	0.88
	0.8	1995	1060	797	0.90
T5	0.1	2310	930	757	0.83
	0.2	2275	950	767	0.85
	0.3	2235	975	789	0.87
	0.4	2200	1000	805	0.89
	0.5	2180	1010	812	0.90
	0.6	2130	1040	834	0.93
	0.7	2100	1060	847	0.95
	0.8	2065	1075	857	0.96

* In DSG0363D 60K ULN, DSG0363D 80K ULN, DSG0363D 100K ULN, DSG0364D 60K ULN, DSG0364D 80K ULN, DSG0364D 100K ULN, DSG0481D 80K ULN, DSG0481D 100K ULN, DSG0483D 80K ULN, DSG0483D 100K ULN, DSG0484D 80K ULN, DSG0484D 100K ULN, DSG0601D 80K ULN, DSG0601D 100K ULN, DSG0603D 80K ULN, DSG0603D 100K ULN, DSG0604D 80K ULN, AND DSG0604D 100K ULN DOWNSHOT & HORIZONTAL Tables, T1 values are for fan mode only

** IN DSG0363D 60K ULN, DSG0363D 80K ULN, DSG0363D 100K ULN, DSG0364D 60K ULN, DSG0364D 80K ULN, DSG0364D 100K ULN, DSG0481D 80K ULN, DSG0481D 100K ULN, DSG0483D 80K ULN, DSG0483D 100K ULN, DSG0484D 80K ULN, DSG0484D 100K ULN, DSG0601D 80K ULN, DSG0601D 100K ULN, DSG0603D 80K ULN, DSG0603D 100K ULN, DSG0604D 80K ULN, AND DSG0604D 100K ULN DOWNSHOT & HORIZONTAL Tables, T3 values are for heat mode only

DSG0363W / DSG0364W 60K ULN DOWNSHOT

SPEED TAP	EXTERNAL STATIC PRESSURE (ESP) in w. c.	AIRFLOW (CFM)	RPM	WATTS	BHP
T1 *	0.8	855	880	257	0.28
	0.9	795	915	267	0.29
	1.0	740	950	277	0.30
	1.1	675	985	287	0.31
	1.2	620	1025	298	0.32
	1.3	-	-	-	-
	1.4	-	-	-	-
	1.5	-	-	-	-
	1.6	-	-	-	-
	1.7	-	-	-	-
	1.8	-	-	-	-
T2	0.8	1355	955	432	0.48
	0.9	1305	985	444	0.50
	1.0	1255	1015	458	0.51
	1.1	1200	1050	471	0.53
	1.2	1150	1080	484	0.54
	1.3	1100	1110	497	0.56
	1.4	1055	1135	509	0.57
	1.5	1020	1165	520	0.59
	1.6	970	1180	527	0.60
	1.7	915	1220	543	0.62
	1.8	-	-	-	-
T3 **	0.8	1340	950	426	0.47
	0.9	1295	980	438	0.49
	1.0	1240	1015	452	0.51
	1.1	1185	1045	466	0.52
	1.2	1135	1075	478	0.54
	1.3	1085	1110	491	0.55
	1.4	1045	1135	503	0.57
	1.5	1005	1160	514	0.58
	1.6	955	1180	520	0.59
	1.7	900	1220	536	0.61
	1.8	855	1240	546	0.62
T4	0.8	1485	975	491	0.55
	0.9	1440	1005	504	0.56
	1.0	1390	1035	518	0.58
	1.1	1340	1065	532	0.60
	1.2	1290	1095	546	0.62
	1.3	1240	1125	560	0.63
	1.4	1195	1155	573	0.65
	1.5	1150	1185	587	0.67
	1.6	1100	1205	597	0.68
	1.7	1050	1235	611	0.69
	1.8	1005	1260	623	0.71
T5	0.8	1465	970	481	0.54
	0.9	1420	1000	494	0.55
	1.0	1370	1030	508	0.57
	1.1	1315	1065	522	0.59
	1.2	1265	1090	535	0.60
	1.3	1220	1125	550	0.62
	1.4	1175	1150	562	0.63
	1.5	1130	1180	576	0.65
	1.6	1080	1200	585	0.66
	1.7	1030	1235	600	0.68
	1.8	980	1260	611	0.70

DSG0363W / DSG0364W 60K ULN HORIZONTAL

SPEED TAP	EXTERNAL STATIC PRESSURE (ESP) in w. c.	AIRFLOW (CFM)	RPM	WATTS	BHP
T1 *	0.8	875	850	249	0.27
	0.9	815	885	259	0.28
	1.0	760	915	269	0.29
	1.1	690	950	278	0.30
	1.2	635	990	289	0.31
	1.3	-	-	-	-
	1.4	-	-	-	-
	1.5	-	-	-	-
	1.6	-	-	-	-
	1.7	-	-	-	-
	1.8	-	-	-	-
T2	0.8	1390	920	419	0.46
	0.9	1340	950	431	0.48
	1.0	1285	980	444	0.49
	1.1	1230	1015	457	0.51
	1.2	1180	1040	469	0.52
	1.3	1130	1070	482	0.54
	1.4	1080	1095	494	0.55
	1.5	1045	1125	504	0.57
	1.6	995	1140	511	0.58
	1.7	940	1175	527	0.59
	1.8	900	1200	535	0.61
T3 **	0.8	1375	915	413	0.46
	0.9	1325	945	425	0.47
	1.0	1270	980	438	0.49
	1.1	1215	1010	452	0.50
	1.2	1165	1035	464	0.52
	1.3	1110	1070	476	0.53
	1.4	1070	1095	488	0.55
	1.5	1030	1120	499	0.56
	1.6	980	1140	504	0.57
	1.7	920	1175	520	0.59
	1.8	875	1195	530	0.60
T4	0.8	1500	940	476	0.53
	0.9	1475	970	489	0.54
	1.0	1425	1000	502	0.56
	1.1	1375	1030	516	0.58
	1.2	1320	1055	530	0.59
	1.3	1270	1085	543	0.61
	1.4	1225	1115	556	0.63
	1.5	1180	1145	569	0.64
	1.6	1130	1165	579	0.65
	1.7	1075	1190	593	0.67
	1.8	1030	1215	604	0.68
T5	0.8	1500	935	467	0.52
	0.9	1455	965	479	0.53
	1.0	1405	995	493	0.55
	1.1	1350	1030	506	0.57
	1.2	1295	1050	519	0.58
	1.3	1250	1085	534	0.60
	1.4	1205	1110	545	0.61
	1.5	1160	1140	559	0.63
	1.6	1105	1160	567	0.64
	1.7	1055	1190	582	0.66
	1.8	1005	1215	593	0.67

* In DSG0363W / DSG0364W 60K ULN, DSG0363W / DSG0364W 80K ULN, DSG0363W / DSG0364W 100K ULN, DSG0483W / DSG0484W 80K ULN, DSG0483W / DSG0484W 100K ULN, DSG0603W / DSG0604W 80K ULN, AND DSG0603W / DSG0604W 100K ULN DOWNSHOT & HORIZONTAL Tables, T1 AND T1' Values are for fan mode only

** In DSG0363W / DSG0364W 60K ULN, DSG0363W / DSG0364W 80K ULN, DSG0363W / DSG0364W 100K ULN, DSG0483W / DSG0484W 80K ULN, DSG0483W / DSG0484W 100K ULN, DSG0603W / DSG0604W 80K ULN, AND DSG0603W / DSG0604W 100K ULN DOWNSHOT & HORIZONTAL TABLES, T3 and T3' Values are for heat mode only

DSG0363W / DSG0364W 60K ULN DOWNSHOT

SPEED TAP	EXTERNAL STATIC PRESSURE (ESP) in w. c.	AIRFLOW (CFM)	RPM	WATTS	BHP
T1′ *	0.8	1190	925	367	0.41
	0.9	1140	960	378	0.42
	1.0	1085	995	391	0.44
	1.1	1025	1025	403	0.45
	1.2	975	1060	415	0.46
	1.3	925	1090	426	0.48
	1.4	885	1115	436	0.49
	1.5	855	1140	443	0.50
	1.6	805	1155	447	0.51
	1.7	745	1200	465	0.53
	1.8	705	1220	472	0.53
T2′	0.8	1590	995	542	0.61
	0.9	1545	1020	556	0.62
	1.0	1495	1050	570	0.64
	1.1	1450	1080	585	0.66
	1.2	1400	1110	599	0.68
	1.3	1350	1140	615	0.69
	1.4	1305	1165	628	0.71
	1.5	1255	1195	644	0.73
	1.6	1205	1220	656	0.74
	1.7	1160	1245	669	0.76
	1.8	1110	1275	682	0.78
T3′ **	0.8	1570	990	532	0.59
	0.9	1525	1020	545	0.61
	1.0	1475	1050	560	0.63
	1.1	1425	1080	574	0.65
	1.2	1380	1105	588	0.66
	1.3	1330	1135	604	0.68
	1.4	1285	1165	617	0.70
	1.5	1235	1195	633	0.72
	1.6	1185	1220	644	0.73
	1.7	1140	1245	657	0.75
	1.8	1090	1270	670	0.76
T4′	0.8	1705	1015	607	0.68
	0.9	1665	1045	621	0.70
	1.0	1615	1075	635	0.72
	1.1	1570	1100	651	0.73
	1.2	1525	1125	665	0.75
	1.3	1475	1155	681	0.77
	1.4	1430	1185	696	0.79
	1.5	1375	1215	713	0.81
	1.6	1325	1240	727	0.83
	1.7	1290	1260	740	0.84
	1.8	1235	1290	754	0.86
T5′	0.8	1695	1015	601	0.67
	0.9	1655	1040	615	0.69
	1.0	1605	1070	630	0.71
	1.1	1560	1100	645	0.73
	1.2	1515	1125	659	0.74
	1.3	1465	1155	676	0.76
	1.4	1420	1180	690	0.78
	1.5	1370	1210	707	0.80
	1.6	1315	1240	721	0.82
	1.7	1280	1260	734	0.83
	1.8	1225	1290	748	0.85

DSG0363W / DSG0364W 60K ULN HORIZONTAL

SPEED TAP	EXTERNAL STATIC PRESSURE (ESP) in w. c.	AIRFLOW (CFM)	RPM	WATTS	BHP
T1′ *	0.8	1220	895	356	0.39
	0.9	1170	925	367	0.41
	1.0	1110	960	379	0.42
	1.1	1050	990	391	0.43
	1.2	1000	1025	403	0.45
	1.3	950	1050	413	0.46
	1.4	905	1075	423	0.47
	1.5	875	1100	430	0.48
	1.6	825	1115	434	0.49
	1.7	765	1160	451	0.51
	1.8	725	1175	458	0.51
T2′	0.8	1630	960	526	0.58
	0.9	1585	985	539	0.60
	1.0	1530	1015	553	0.62
	1.1	1485	1040	567	0.63
	1.2	1435	1070	581	0.65
	1.3	1385	1100	597	0.67
	1.4	1340	1125	609	0.69
	1.5	1285	1155	625	0.70
	1.6	1235	1175	636	0.72
	1.7	1190	1200	649	0.73
	1.8	1140	1230	662	0.75
T3′ **	0.8	1610	955	516	0.57
	0.9	1565	985	529	0.59
	1.0	1510	1015	543	0.61
	1.1	1460	1040	557	0.62
	1.2	1415	1065	570	0.64
	1.3	1365	1095	586	0.66
	1.4	1315	1125	598	0.67
	1.5	1265	1155	614	0.69
	1.6	1215	1175	625	0.70
	1.7	1170	1200	637	0.72
	1.8	1115	1225	650	0.73
T4′	0.8	1750	980	589	0.65
	0.9	1705	1010	602	0.67
	1.0	1655	1035	616	0.69
	1.1	1610	1060	631	0.71
	1.2	1565	1085	645	0.72
	1.3	1510	1115	661	0.74
	1.4	1465	1145	675	0.76
	1.5	1410	1170	692	0.78
	1.6	1360	1195	705	0.80
	1.7	1320	1215	718	0.81
	1.8	1265	1245	731	0.83
T5′	0.8	1735	980	583	0.65
	0.9	1695	1005	597	0.66
	1.0	1645	1035	611	0.68
	1.1	1600	1060	626	0.70
	1.2	1555	1085	639	0.72
	1.3	1500	1115	656	0.74
	1.4	1455	1140	669	0.75
	1.5	1405	1170	686	0.77
	1.6	1350	1195	699	0.79
	1.7	1310	1215	712	0.80
	1.8	1255	1245	726	0.82

* In DSG0363W / DSG0364W 60K ULN, DSG0363W / DSG0364W 80K ULN, DSG0363W / DSG0364W 100K ULN, DSG0483W / DSG0484W 80K ULN, DSG0483W / DSG0484W 100K ULN, DSG0603W / DSG0604W 80K ULN, AND DSG0603W / DSG0604W 100K ULN DOWNSHOT & HORIZONTAL Tables, T1 AND T1' Values are for fan mode only

** In DSG0363W / DSG0364W 60K ULN, DSG0363W / DSG0364W 80K ULN, DSG0363W / DSG0364W 100K ULN, DSG0483W / DSG0484W 80K ULN, DSG0483W / DSG0484W 100K ULN, DSG0603W / DSG0604W 80K ULN, AND DSG0603W / DSG0604W 100K ULN DOWNSHOT & HORIZONTAL TABLES, T3 and T3' Values are for heat mode only

DSG0363W / DSG0364W 80K ULN DOWNSHOT

SPEED TAP	EXTERNAL STATIC PRESSURE (ESP) in w. c.	AIRFLOW (CFM)	RPM	WATTS	BHP
T1 *	0.8	1310	945	414	0.46
	0.9	1260	975	426	0.47
	1.0	1210	1010	439	0.49
	1.1	1155	1040	453	0.51
	1.2	1100	1075	465	0.52
	1.3	1055	1105	478	0.54
	1.4	1010	1130	489	0.55
	1.5	975	1160	499	0.56
	1.6	925	1175	505	0.57
	1.7	870	1215	521	0.59
	1.8	825	1235	531	0.60
T2	0.8	1355	955	432	0.48
	0.9	1305	985	444	0.50
	1.0	1255	1015	458	0.51
	1.1	1200	1050	471	0.53
	1.2	1150	1080	484	0.54
	1.3	1100	1110	497	0.56
	1.4	1055	1135	509	0.57
	1.5	1020	1165	520	0.59
	1.6	970	1180	527	0.60
	1.7	915	1220	543	0.62
	1.8	-	-	-	-
T3 **	0.8	1755	1030	640	0.72
	0.9	1715	1055	654	0.73
	1.0	1670	1085	669	0.75
	1.1	1630	1110	684	0.77
	1.2	1580	1135	699	0.79
	1.3	1535	1165	716	0.81
	1.4	1490	1190	731	0.83
	1.5	1435	1220	748	0.85
	1.6	1385	1245	763	0.87
	1.7	1350	1270	776	0.88
	1.8	1295	1295	791	0.90
T4	0.8	1485	975	491	0.55
	0.9	1440	1005	504	0.56
	1.0	1390	1035	518	0.58
	1.1	1340	1065	532	0.60
	1.2	1290	1095	546	0.62
	1.3	1240	1125	560	0.63
	1.4	1195	1155	573	0.65
	1.5	1150	1185	587	0.67
	1.6	1100	1205	597	0.68
	1.7	1050	1235	611	0.69
	1.8	1005	1260	623	0.71
T5	0.8	1880	1060	726	0.81
	0.9	1845	1085	741	0.83
	1.0	1800	1110	755	0.85
	1.1	1765	1135	771	0.87
	1.2	1720	1155	786	0.89
	1.3	1670	1185	803	0.91
	1.4	1630	1210	819	0.93
	1.5	1575	1240	837	0.95
	1.6	1525	1265	854	0.97
	1.7	1490	1285	867	0.98
	1.8	1440	1315	884	1.01

DSG0363W / DSG0364W 80K ULN HORIZONTAL

SPEED TAP	EXTERNAL STATIC PRESSURE (ESP) in w. c.	AIRFLOW (CFM)	RPM	WATTS	BHP
T1 *	0.8	1345	910	402	0.44
	0.9	1290	940	413	0.46
	1.0	1240	975	426	0.47
	1.1	1185	1005	439	0.49
	1.2	1130	1035	451	0.50
	1.3	1080	1065	464	0.52
	1.4	1035	1090	474	0.53
	1.5	1000	1120	484	0.54
	1.6	950	1135	490	0.55
	1.7	890	1170	505	0.57
	1.8	845	1190	515	0.58
T2	0.8	1390	920	419	0.46
	0.9	1340	950	431	0.48
	1.0	1285	980	444	0.49
	1.1	1230	1015	457	0.51
	1.2	1180	1040	469	0.52
	1.3	1130	1070	482	0.54
	1.4	1080	1095	494	0.55
	1.5	1045	1125	504	0.57
	1.6	995	1140	511	0.58
	1.7	940	1175	527	0.59
	1.8	900	1200	535	0.61
T3 **	0.8	1800	995	621	0.69
	0.9	1760	1020	634	0.71
	1.0	1710	1045	649	0.73
	1.1	1670	1070	663	0.74
	1.2	1620	1095	678	0.76
	1.3	1575	1125	695	0.78
	1.4	1525	1150	709	0.80
	1.5	1470	1175	726	0.82
	1.6	1420	1200	740	0.83
	1.7	1385	1225	753	0.85
	1.8	1325	1250	767	0.87
T4	0.8	-	-	-	-
	0.9	1475	970	489	0.54
	1.0	1425	1000	502	0.56
	1.1	1375	1030	516	0.58
	1.2	1320	1055	530	0.59
	1.3	1270	1085	543	0.61
	1.4	1225	1115	556	0.63
	1.5	1180	1145	569	0.64
	1.6	1130	1165	579	0.65
	1.7	1075	1190	593	0.67
	1.8	1030	1215	604	0.68
T5	0.8	1925	1025	704	0.79
	0.9	1890	1045	719	0.80
	1.0	1845	1070	732	0.82
	1.1	1810	1095	748	0.84
	1.2	1765	1115	762	0.85
	1.3	1710	1145	779	0.88
	1.4	1670	1170	794	0.90
	1.5	1615	1195	812	0.92
	1.6	1565	1220	828	0.93
	1.7	1525	1240	841	0.95
	1.8	1475	1270	857	0.97

* In DSG0363W / DSG0364W 60K ULN, DSG0363W / DSG0364W 80K ULN, DSG0363W / DSG0364W 100K ULN, DSG0483W / DSG0484W 80K ULN, DSG0483W / DSG0484W 100K ULN, DSG0603W / DSG0604W 80K ULN, AND DSG0603W / DSG0604W 100K ULN DOWNSHOT & HORIZONTAL Tables, T1 AND T1' Values are for fan mode only

** In DSG0363W / DSG0364W 60K ULN, DSG0363W / DSG0364W 80K ULN, DSG0363W / DSG0364W 100K ULN, DSG0483W / DSG0484W 80K ULN, DSG0483W / DSG0484W 100K ULN, DSG0603W / DSG0604W 80K ULN, AND DSG0603W / DSG0604W 100K ULN DOWNSHOT & HORIZONTAL TABLES, T3 and T3' Values are for heat mode only

DSG0363W / DSG0364W 80K ULN DOWNSHOT

SPEED TAP	EXTERNAL STATIC PRESSURE (ESP) in w. c.	AIRFLOW (CFM)	RPM	WATTS	BHP
T1' *	0.8	1550	985	521	0.58
	0.9	1500	1015	535	0.60
	1.0	1455	1045	549	0.62
	1.1	1405	1075	564	0.63
	1.2	1355	1105	577	0.65
	1.3	1305	1135	593	0.67
	1.4	1265	1160	606	0.68
	1.5	1215	1190	621	0.70
	1.6	1165	1215	632	0.72
	1.7	1120	1240	646	0.73
	1.8	1070	1270	658	0.75
T2'	0.8	-	-	-	-
	0.9	-	-	-	-
	1.0	1495	1050	570	0.64
	1.1	1450	1080	585	0.66
	1.2	1400	1110	599	0.68
	1.3	1350	1140	615	0.69
	1.4	1305	1165	628	0.71
	1.5	1255	1195	644	0.73
	1.6	1205	1220	656	0.74
	1.7	1160	1245	669	0.76
	1.8	1110	1275	682	0.78
T3' **	0.8	1950	1075	780	0.87
	0.9	1910	1100	795	0.89
	1.0	1875	1125	809	0.91
	1.1	1835	1145	824	0.93
	1.2	1795	1170	840	0.95
	1.3	1745	1195	857	0.97
	1.4	1705	1220	874	0.99
	1.5	1655	1250	892	1.01
	1.6	1610	1275	909	1.03
	1.7	1575	1295	923	1.05
	1.8	1520	1325	941	1.07
T4'	0.8	1705	1015	607	0.68
	0.9	1665	1045	621	0.70
	1.0	1615	1075	635	0.72
	1.1	1570	1100	651	0.73
	1.2	1525	1125	665	0.75
	1.3	1475	1155	681	0.77
	1.4	1430	1185	696	0.79
	1.5	1375	1215	713	0.81
	1.6	1325	1240	727	0.83
	1.7	1290	1260	740	0.84
	1.8	1235	1290	754	0.86
T5'	0.8	-	-	-	-
	0.9	-	-	-	-
	1.0	1995	1155	915	1.03
	1.1	1960	1175	930	1.05
	1.2	1920	1195	945	1.06
	1.3	1880	1220	962	1.09
	1.4	1840	1240	979	1.10
	1.5	1800	1265	996	1.13
	1.6	1750	1290	1014	1.15
	1.7	1715	1315	1030	1.17
	1.8	1670	1340	1050	1.19

DSG0363W / DSG0364W 80K ULN HORIZONTAL

SPEED TAP	EXTERNAL STATIC PRESSURE (ESP) in w. c.	AIRFLOW (CFM)	RPM	WATTS	BHP
T1' *	0.8	1590	950	505	0.56
	0.9	1545	980	519	0.58
	1.0	1490	1010	533	0.60
	1.1	1440	1035	547	0.61
	1.2	1390	1065	560	0.63
	1.3	1340	1095	575	0.65
	1.4	1295	1120	588	0.66
	1.5	1245	1150	602	0.68
	1.6	1195	1170	613	0.69
	1.7	1150	1195	627	0.71
	1.8	1095	1225	638	0.72
T2'	0.8	-	-	-	-
	0.9	-	-	-	-
	1.0	-	-	-	-
	1.1	1485	1040	567	0.63
	1.2	1435	1070	581	0.65
	1.3	1385	1100	597	0.67
	1.4	1340	1125	609	0.69
	1.5	1285	1155	625	0.70
	1.6	1235	1175	636	0.72
	1.7	1190	1200	649	0.73
	1.8	1140	1230	662	0.75
T3' **	0.8	2000	1035	757	0.84
	0.9	1960	1060	771	0.86
	1.0	1920	1085	785	0.88
	1.1	1880	1105	799	0.89
	1.2	1840	1130	815	0.91
	1.3	1790	1155	831	0.93
	1.4	1750	1175	848	0.95
	1.5	1695	1205	865	0.98
	1.6	1650	1230	882	1.00
	1.7	1615	1250	895	1.01
	1.8	1560	1280	913	1.04
T4'	0.8	1750	980	589	0.65
	0.9	1705	1010	602	0.67
	1.0	1655	1035	616	0.69
	1.1	1610	1060	631	0.71
	1.2	1565	1085	645	0.72
	1.3	1510	1115	661	0.74
	1.4	1465	1145	675	0.76
	1.5	1410	1170	692	0.78
	1.6	1360	1195	705	0.80
	1.7	1320	1215	718	0.81
	1.8	1265	1245	731	0.83
T5'	0.8				
	0.9				
	1.0				
	1.1				
	1.2	1970	1155	917	1.03
	1.3	1925	1175	933	1.05
	1.4	1885	1195	950	1.06
	1.5	1845	1220	966	1.09
	1.6	1795	1245	984	1.11
	1.7	1760	1270	999	1.13
	1.8	1710	1295	1019	1.15

* In DSG0363W / DSG0364W 60K ULN, DSG0363W / DSG0364W 80K ULN, DSG0363W / DSG0364W 100K ULN, DSG0483W / DSG0484W 80K ULN, DSG0483W / DSG0484W 100K ULN, DSG0603W / DSG0604W 80K ULN, AND DSG0603W / DSG0604W 100K ULN DOWNSHOT & HORIZONTAL Tables, T1 AND T1' Values are for fan mode only

** In DSG0363W / DSG0364W 60K ULN, DSG0363W / DSG0364W 80K ULN, DSG0363W / DSG0364W 100K ULN, DSG0483W / DSG0484W 80K ULN, DSG0483W / DSG0484W 100K ULN, DSG0603W / DSG0604W 80K ULN, AND DSG0603W / DSG0604W 100K ULN DOWNSHOT & HORIZONTAL TABLES, T3 and T3' Values are for heat mode only

DSG0363W / DSG0364W 100K ULN DOWNSHOT

SPEED TAP	EXTERNAL STATIC PRESSURE (ESP) in w. c.	AIRFLOW (CFM)	RPM	WATTS	BHP
T1 *	0.8	740	870	227	0.24
	0.9	680	905	236	0.25
	1.0	625	940	245	0.26
	1.1	-	-	-	-
	1.2	-	-	-	-
	1.3	-	-	-	-
	1.4	-	-	-	-
	1.5	-	-	-	-
	1.6	-	-	-	-
	1.7	-	-	-	-
	1.8	-	-	-	-
T2	0.8	1355	955	432	0.48
	0.9	1305	985	444	0.50
	1.0	1255	1015	458	0.51
	1.1	1200	1050	471	0.53
	1.2	1150	1080	484	0.54
	1.3	1100	1110	497	0.56
	1.4	1055	1135	509	0.57
	1.5	1020	1165	520	0.59
	1.6	970	1180	527	0.60
	1.7	915	1220	543	0.62
	1.8	-	-	-	-
T3 **	0.8	1025	905	309	0.34
	0.9	970	935	320	0.35
	1.0	915	970	332	0.36
	1.1	855	1005	343	0.38
	1.2	800	1045	354	0.39
	1.3	755	1075	363	0.40
	1.4	715	1095	371	0.41
	1.5	700	1115	374	0.42
	1.6	650	1125	373	0.42
	1.7	-	-	-	-
	1.8	-	-	-	-
T4	0.8	1485	975	491	0.55
	0.9	1440	1005	504	0.56
	1.0	1390	1035	518	0.58
	1.1	1340	1065	532	0.60
	1.2	1290	1095	546	0.62
	1.3	1240	1125	560	0.63
	1.4	1195	1155	573	0.65
	1.5	1150	1185	587	0.67
	1.6	1100	1205	597	0.68
	1.7	1050	1235	611	0.69
	1.8	1005	1260	623	0.71
T5	0.8	1140	920	349	0.39
	0.9	1085	950	360	0.40
	1.0	1035	985	372	0.41
	1.1	975	1020	384	0.43
	1.2	920	1055	396	0.44
	1.3	875	1085	406	0.45
	1.4	835	1110	416	0.46
	1.5	810	1135	422	0.48
	1.6	760	1145	424	0.48
	1.7	695	1195	443	0.50
	1.8	655	1215	450	0.51

DSG0363W / DSG0364W 100K ULN HORIZONTAL

SPEED TAP	EXTERNAL STATIC PRESSURE (ESP) in w. c.	AIRFLOW (CFM)	RPM	WATTS	BHP
T1 *	0.8	760	840	220	0.23
	0.9	695	875	229	0.24
	1.0	640	905	238	0.25
	1.1	-	-	-	-
	1.2	-	-	-	-
	1.3	-	-	-	-
	1.4	-	-	-	-
	1.5	-	-	-	-
	1.6	-	-	-	-
	1.7	-	-	-	-
	1.8	-	-	-	-
T2	0.8	1390	920	419	0.46
	0.9	1340	950	431	0.48
	1.0	1285	980	444	0.49
	1.1	1230	1015	457	0.51
	1.2	1180	1040	469	0.52
	1.3	1130	1070	482	0.54
	1.4	1080	1095	494	0.55
	1.5	1045	1125	504	0.57
	1.6	995	1140	511	0.58
	1.7	940	1175	527	0.59
	1.8	900	1200	535	0.61
T3 **	0.8	1050	875	300	0.33
	0.9	995	900	310	0.34
	1.0	940	935	322	0.35
	1.1	875	970	333	0.36
	1.2	820	1010	343	0.38
	1.3	775	1035	352	0.39
	1.4	735	1055	360	0.40
	1.5	715	1075	363	0.40
	1.6	665	1085	362	0.41
	1.7	-	-	-	-
	1.8	-	-	-	-
T4	0.8	1500	940	476	0.53
	0.9	1475	970	489	0.54
	1.0	1425	1000	502	0.56
	1.1	1375	1030	516	0.58
	1.2	1320	1055	530	0.59
	1.3	1270	1085	543	0.61
	1.4	1225	1115	556	0.63
	1.5	1180	1145	569	0.64
	1.6	1130	1165	579	0.65
	1.7	1075	1190	593	0.67
	1.8	1030	1215	604	0.68
T5	0.8	1170	890	339	0.37
	0.9	1110	915	349	0.38
	1.0	1060	950	361	0.40
	1.1	1000	985	372	0.41
	1.2	945	1020	384	0.43
	1.3	895	1045	394	0.44
	1.4	855	1070	404	0.45
	1.5	830	1095	409	0.46
	1.6	780	1105	411	0.46
	1.7	710	1155	430	0.48
	1.8	670	1170	437	0.49

* In DSG0363W / DSG0364W 60K ULN, DSG0363W / DSG0364W 80K ULN, DSG0363W / DSG0364W 100K ULN, DSG0483W / DSG0484W 80K ULN, DSG0483W / DSG0484W 100K ULN, DSG0603W / DSG0604W 80K ULN, AND DSG0603W / DSG0604W 100K ULN DOWNSHOT & HORIZONTAL Tables, T1 AND T1' Values are for fan mode only

** In DSG0363W / DSG0364W 60K ULN, DSG0363W / DSG0364W 80K ULN, DSG0363W / DSG0364W 100K ULN, DSG0483W / DSG0484W 80K ULN, DSG0483W / DSG0484W 100K ULN, DSG0603W / DSG0604W 80K ULN, AND DSG0603W / DSG0604W 100K ULN DOWNSHOT & HORIZONTAL TABLES, T3 and T3' Values are for heat mode only

DSG0363W / DSG0364W 100K ULN DOWNSHOT

SPEED TAP	EXTERNAL STATIC PRESSURE (ESP) in w. c.	AIRFLOW (CFM)	RPM	WATTS	BHP
T1' *	0.8	1090	915	331	0.37
	0.9	1035	945	342	0.38
	1.0	980	980	354	0.39
	1.1	920	1015	366	0.41
	1.2	870	1050	378	0.42
	1.3	825	1080	387	0.43
	1.4	780	1105	396	0.44
	1.5	760	1125	400	0.45
	1.6	710	1135	401	0.45
	1.7	640	1190	421	0.48
	1.8	605	1210	427	0.48
T2'	0.8	1590	995	542	0.61
	0.9	1545	1020	556	0.62
	1.0	1495	1050	570	0.64
	1.1	1450	1080	585	0.66
	1.2	1400	1110	599	0.68
	1.3	1350	1140	615	0.69
	1.4	1305	1165	628	0.71
	1.5	1255	1195	644	0.73
	1.6	1205	1220	656	0.74
	1.7	1160	1245	669	0.76
	1.8	1110	1275	682	0.78
T3' **	0.8	1260	940	394	0.44
	0.9	1210	970	406	0.45
	1.0	1160	1005	419	0.47
	1.1	1105	1035	432	0.48
	1.2	1050	1070	445	0.50
	1.3	1005	1100	456	0.51
	1.4	960	1125	467	0.52
	1.5	925	1150	476	0.54
	1.6	875	1165	481	0.54
	1.7	815	1210	498	0.56
	1.8	775	1230	506	0.57
T4'	0.8	1705	1015	607	0.68
	0.9	1665	1045	621	0.70
	1.0	1615	1075	635	0.72
	1.1	1570	1100	651	0.73
	1.2	1525	1125	665	0.75
	1.3	1475	1155	681	0.77
	1.4	1430	1185	696	0.79
	1.5	1375	1215	713	0.81
	1.6	1325	1240	727	0.83
	1.7	1290	1260	740	0.84
	1.8	1235	1290	754	0.86
T5'	0.8	1375	955	442	0.49
	0.9	1330	985	454	0.51
	1.0	1280	1020	468	0.52
	1.1	1225	1050	481	0.54
	1.2	1175	1080	494	0.56
	1.3	1125	1115	508	0.57
	1.4	1080	1140	520	0.59
	1.5	1040	1165	531	0.60
	1.6	990	1185	539	0.61
	1.7	935	1220	554	0.63
	1.8	900	1245	564	0.64

DSG0363W / DSG0364W 100K ULN HORIZONTAL

SPEED TAP	EXTERNAL STATIC PRESSURE (ESP) in w. c.	AIRFLOW (CFM)	RPM	WATTS	BHP
T1' *	0.8	1115	885	321	0.35
	0.9	1060	910	332	0.36
	1.0	1005	945	343	0.38
	1.1	945	980	355	0.39
	1.2	890	1015	367	0.41
	1.3	845	1040	375	0.42
	1.4	800	1065	384	0.43
	1.5	780	1085	388	0.43
	1.6	730	1095	389	0.44
	1.7	655	1150	408	0.46
	1.8	620	1170	414	0.47
T2'	0.8	-	-	-	-
	0.9	-	-	-	-
	1.0	-	-	-	-
	1.1	1485	1040	567	0.63
	1.2	1435	1070	581	0.65
	1.3	1385	1100	597	0.67
	1.4	1340	1125	609	0.69
	1.5	1285	1155	625	0.70
	1.6	1235	1175	636	0.72
	1.7	1190	1200	649	0.73
	1.8	1140	1230	662	0.75
T3' **	0.8	1290	905	382	0.42
	0.9	1240	935	394	0.44
	1.0	1190	970	406	0.45
	1.1	1135	1000	419	0.47
	1.2	1075	1035	432	0.48
	1.3	1030	1060	442	0.49
	1.4	985	1085	453	0.51
	1.5	950	1110	462	0.52
	1.6	900	1125	467	0.52
	1.7	-	-	-	-
	1.8	-	-	-	-
T4'	0.8	1750	980	589	0.65
	0.9	1705	1010	602	0.67
	1.0	1655	1035	616	0.69
	1.1	1610	1060	631	0.71
	1.2	1565	1085	645	0.72
	1.3	1510	1115	661	0.74
	1.4	1465	1145	675	0.76
	1.5	1410	1170	692	0.78
	1.6	1360	1195	705	0.80
	1.7	1320	1215	718	0.81
	1.8	1265	1245	731	0.83
T5'	0.8	1410	920	429	0.47
	0.9	1365	950	440	0.49
	1.0	1310	985	454	0.51
	1.1	1255	1015	467	0.52
	1.2	1205	1040	479	0.53
	1.3	1155	1075	493	0.55
	1.4	1105	1100	504	0.57
	1.5	1065	1125	515	0.58
	1.6	1015	1145	523	0.59
	1.7	960	1175	537	0.60
	1.8	910	1200	547	0.62

* In DSG0363W / DSG0364W 60K ULN, DSG0363W / DSG0364W 80K ULN, DSG0363W / DSG0364W 100K ULN, DSG0483W / DSG0484W 80K ULN, DSG0483W / DSG0484W 100K ULN, DSG0603W / DSG0604W 80K ULN, AND DSG0603W / DSG0604W 100K ULN DOWNSHOT & HORIZONTAL Tables, T1 AND T1' Values are for fan mode only

** In DSG0363W / DSG0364W 60K ULN, DSG0363W / DSG0364W 80K ULN, DSG0363W / DSG0364W 100K ULN, DSG0483W / DSG0484W 80K ULN, DSG0483W / DSG0484W 100K ULN, DSG0603W / DSG0604W 80K ULN, AND DSG0603W / DSG0604W 100K ULN DOWNSHOT & HORIZONTAL TABLES, T3 and T3' Values are for heat mode only

DSG0483W / DSG0484W 80K ULN DOWNSHOT

SPEED TAP	EXTERNAL STATIC PRESSURE (ESP) in w. c.	AIRFLOW (CFM)	RPM	WATTS	BHP
T1 *	0.8	1150	945	373	0.41
	0.9	1090	980	387	0.43
	1.0	1005	1020	399	0.45
	1.1	1035	1040	407	0.46
	1.2	990	1080	422	0.47
	1.3	975	1110	432	0.49
	1.4	925	1130	439	0.49
	1.5	840	1160	453	0.51
	1.6	800	1185	461	0.52
	1.7	740	1195	464	0.52
	1.8	715	1220	477	0.53
T2	0.8	1770	1070	706	0.79
	0.9	1730	1100	726	0.82
	1.0	1690	1130	742	0.84
	1.1	1640	1150	753	0.85
	1.2	1590	1180	774	0.88
	1.3	1540	1205	791	0.89
	1.4	1500	1230	798	0.91
	1.5	1465	1255	819	0.93
	1.6	1425	1275	833	0.95
	1.7	1395	1300	839	0.97
	1.8	1350	1335	861	0.99
T3 **	0.8	1660	1045	632	0.71
	0.9	1615	1075	651	0.73
	1.0	1570	1110	667	0.76
	1.1	1525	1130	677	0.77
	1.2	1475	1160	698	0.79
	1.3	1430	1190	713	0.81
	1.4	1390	1210	720	0.82
	1.5	1350	1235	739	0.84
	1.6	1315	1255	752	0.85
	1.7	1275	1280	758	0.87
	1.8	1230	1315	778	0.90
T4	0.8	1895	1100	802	0.90
	0.9	1855	1130	822	0.93
	1.0	1820	1155	839	0.95
	1.1	1775	1175	850	0.96
	1.2	1725	1205	871	0.99
	1.3	1675	1230	889	1.01
	1.4	1635	1250	898	1.02
	1.5	1595	1275	921	1.04
	1.6	1560	1300	937	1.06
	1.7	1525	1320	944	1.08
	1.8	1480	1355	967	1.11
T5	0.8	1785	1075	718	0.81
	0.9	1745	1105	738	0.83
	1.0	1705	1135	754	0.85
	1.1	1655	1150	765	0.86
	1.2	1605	1185	786	0.89
	1.3	1560	1210	803	0.91
	1.4	1520	1230	810	0.93
	1.5	1480	1255	832	0.94
	1.6	1445	1280	845	0.96
	1.7	1410	1300	852	0.98
	1.8	1365	1340	874	1.01

DSG0483W / DSG0484W 80K ULN HORIZONTAL

SPEED TAP	EXTERNAL STATIC PRESSURE (ESP) in w. c.	AIRFLOW (CFM)	RPM	WATTS	BHP
T1 *	0.8	1185	900	354	0.39
	0.9	1125	930	368	0.41
	1.0	1035	970	379	0.42
	1.1	1065	990	387	0.43
	1.2	1020	1025	401	0.45
	1.3	1005	1055	410	0.46
	1.4	955	1075	417	0.47
	1.5	865	1100	430	0.48
	1.6	825	1125	438	0.49
	1.7	760	1135	441	0.50
	1.8	735	1160	453	0.51
T2	0.8	1825	1015	671	0.75
	0.9	1780	1045	690	0.78
	1.0	1740	1075	705	0.80
	1.1	1690	1095	715	0.81
	1.2	1640	1120	735	0.83
	1.3	1585	1145	751	0.85
	1.4	1545	1170	758	0.87
	1.5	1510	1190	778	0.88
	1.6	1470	1210	791	0.90
	1.7	1435	1235	797	0.92
	1.8	1390	1270	818	0.94
T3 **	0.8	1710	995	600	0.68
	0.9	1665	1020	618	0.69
	1.0	1615	1055	634	0.72
	1.1	1570	1075	643	0.73
	1.2	1520	1100	663	0.75
	1.3	1475	1130	677	0.77
	1.4	1430	1150	684	0.78
	1.5	1390	1175	702	0.80
	1.6	1355	1190	714	0.81
	1.7	1315	1215	720	0.83
	1.8	1265	1250	739	0.85
T4	0.8	1950	1045	762	0.86
	0.9	1910	1075	781	0.88
	1.0	1875	1095	797	0.90
	1.1	1830	1115	808	0.91
	1.2	1775	1145	827	0.94
	1.3	1725	1170	845	0.96
	1.4	1685	1190	853	0.97
	1.5	1645	1210	875	0.99
	1.6	1605	1235	890	1.01
	1.7	1570	1255	897	1.03
	1.8	1525	1285	919	1.05
T5	0.8	1840	1020	682	0.77
	0.9	1795	1050	701	0.79
	1.0	1755	1080	716	0.81
	1.1	1705	1095	727	0.82
	1.2	1655	1125	747	0.85
	1.3	1605	1150	763	0.86
	1.4	1565	1170	770	0.88
	1.5	1525	1190	790	0.89
	1.6	1490	1215	803	0.91
	1.7	1450	1235	809	0.93
	1.8	1405	1275	830	0.96

* In DSG0363W / DSG0364W 60K ULN, DSG0363W / DSG0364W 80K ULN, DSG0363W / DSG0364W 100K ULN, DSG0483W / DSG0484W 80K ULN, DSG0483W / DSG0484W 100K ULN, DSG0603W / DSG0604W 80K ULN, AND DSG0603W / DSG0604W 100K ULN DOWNSHOT & HORIZONTAL Tables, T1 AND T1' Values are for fan mode only

** In DSG0363W / DSG0364W 60K ULN, DSG0363W / DSG0364W 80K ULN, DSG0363W / DSG0364W 100K ULN, DSG0483W / DSG0484W 80K ULN, DSG0483W / DSG0484W 100K ULN, DSG0603W / DSG0604W 80K ULN, AND DSG0603W / DSG0604W 100K ULN DOWNSHOT & HORIZONTAL TABLES, T3 and T3' Values are for heat mode only

DSG0483W / DSG0484W 80K ULN DOWNSHOT

SPEED TAP	EXTERNAL STATIC PRESSURE (ESP) in w. c.	AIRFLOW (CFM)	RPM	WATTS	BHP
T1' *	0.8	1325	980	449	0.50
	0.9	1270	1010	465	0.52
	1.0	1200	1050	479	0.54
	1.1	1195	1070	487	0.55
	1.2	1150	1105	505	0.57
	1.3	1120	1135	516	0.58
	1.4	1080	1155	523	0.59
	1.5	1010	1185	538	0.61
	1.6	970	1210	548	0.62
	1.7	920	1225	552	0.63
	1.8	890	1255	567	0.65
T2'	0.8	1950	1115	851	0.96
	0.9	1915	1145	872	0.98
	1.0	1880	1165	889	1.00
	1.1	1835	1185	900	1.02
	1.2	1790	1215	921	1.04
	1.3	1745	1240	940	1.06
	1.4	1695	1265	949	1.08
	1.5	1660	1290	974	1.11
	1.6	1620	1310	990	1.12
	1.7	1590	1330	997	1.14
	1.8	1545	1365	1021	1.17
T3' **	0.8	1850	1090	765	0.86
	0.9	1810	1120	786	0.88
	1.0	1775	1145	802	0.90
	1.1	1725	1165	813	0.92
	1.2	1675	1195	834	0.94
	1.3	1625	1220	852	0.96
	1.4	1585	1245	860	0.98
	1.5	1550	1270	882	1.00
	1.6	1510	1290	897	1.02
	1.7	1480	1315	904	1.04
	1.8	1435	1350	927	1.07
T4'	0.8	2000	1130	902	1.01
	0.9	1970	1160	923	1.04
	1.0	1935	1180	940	1.06
	1.1	1900	1195	951	1.07
	1.2	1855	1225	972	1.10
	1.3	1810	1250	991	1.12
	1.4	1760	1275	1002	1.14
	1.5	1720	1300	1028	1.16
	1.6	1680	1325	1045	1.19
	1.7	1650	1340	1052	1.20
	1.8	1605	1375	1076	1.23
T5'	0.8	1965	1120	864	0.97
	0.9	1925	1145	885	0.99
	1.0	1895	1170	901	1.01
	1.1	1855	1190	913	1.03
	1.2	1805	1220	934	1.06
	1.3	1760	1245	953	1.08
	1.4	1715	1265	962	1.10
	1.5	1675	1290	987	1.12
	1.6	1635	1315	1004	1.14
	1.7	1605	1335	1011	1.16
	1.8	1560	1365	1035	1.18

DSG0483W / DSG0484W 80K ULN HORIZONTAL

SPEED TAP	EXTERNAL STATIC PRESSURE (ESP) in w. c.	AIRFLOW (CFM)	RPM	WATTS	BHP
T1' *	0.8	1365	930	427	0.48
	0.9	1310	960	442	0.49
	1.0	1235	1000	455	0.51
	1.1	1230	1015	463	0.52
	1.2	1185	1050	480	0.54
	1.3	1155	1080	490	0.56
	1.4	1110	1095	497	0.56
	1.5	1040	1125	511	0.58
	1.6	1000	1150	521	0.59
	1.7	950	1165	524	0.60
	1.8	915	1190	539	0.61
T2'	0.8	2000	1060	808	0.91
	0.9	1970	1090	828	0.93
	1.0	1935	1105	845	0.95
	1.1	1890	1125	855	0.96
	1.2	1845	1155	875	0.99
	1.3	1795	1180	893	1.01
	1.4	1745	1200	902	1.03
	1.5	1710	1225	925	1.05
	1.6	1670	1245	941	1.07
	1.7	1640	1265	947	1.08
	1.8	1590	1295	970	1.11
T3' **	0.8	1905	1035	727	0.82
	0.9	1865	1065	747	0.84
	1.0	1830	1090	762	0.86
	1.1	1775	1105	772	0.87
	1.2	1725	1135	792	0.90
	1.3	1675	1160	809	0.92
	1.4	1635	1185	817	0.94
	1.5	1595	1205	838	0.95
	1.6	1555	1225	852	0.97
	1.7	1525	1250	859	0.99
	1.8	1480	1285	881	1.02
T4'	0.8	-	-	-	-
	0.9	-	-	-	-
	1.0	1995	1120	893	1.00
	1.1	1955	1135	903	1.02
	1.2	1910	1165	923	1.04
	1.3	1865	1190	941	1.06
	1.4	1815	1210	952	1.08
	1.5	1770	1235	977	1.11
	1.6	1730	1260	993	1.13
	1.7	1700	1275	999	1.14
	1.8	1655	1305	1022	1.17
T5'	0.8	-	-	-	-
	0.9	1985	1090	841	0.94
	1.0	1950	1110	856	0.96
	1.1	1910	1130	867	0.98
	1.2	1860	1160	887	1.00
	1.3	1815	1185	905	1.03
	1.4	1765	1200	914	1.04
	1.5	1725	1225	938	1.06
	1.6	1685	1250	954	1.08
	1.7	1655	1270	960	1.10
	1.8	1605	1295	983	1.12

* In DSG0363W / DSG0364W 60K ULN, DSG0363W / DSG0364W 80K ULN, DSG0363W / DSG0364W 100K ULN, DSG0483W / DSG0484W 80K ULN, DSG0483W / DSG0484W 100K ULN, DSG0603W / DSG0604W 80K ULN, AND DSG0603W / DSG0604W 100K ULN DOWNSHOT & HORIZONTAL Tables, T1 AND T1' Values are for fan mode only

** In DSG0363W / DSG0364W 60K ULN, DSG0363W / DSG0364W 80K ULN, DSG0363W / DSG0364W 100K ULN, DSG0483W / DSG0484W 80K ULN, DSG0483W / DSG0484W 100K ULN, DSG0603W / DSG0604W 80K ULN, AND DSG0603W / DSG0604W 100K ULN DOWNSHOT & HORIZONTAL TABLES, T3 and T3' Values are for heat mode only

DSG0483W / DSG0484W 100K ULN DOWNSHOT

SPEED TAP	EXTERNAL STATIC PRESSURE (ESP) in w. c.	AIRFLOW (CFM)	RPM	WATTS	BHP
T1 *	0.8	1290	970	434	0.48
	0.9	1235	1005	449	0.50
	1.0	1165	1040	462	0.52
	1.1	1165	1065	471	0.53
	1.2	1120	1100	488	0.55
	1.3	1090	1130	499	0.56
	1.4	1050	1150	506	0.57
	1.5	975	1180	521	0.59
	1.6	940	1205	530	0.60
	1.7	885	1215	534	0.61
	1.8	855	1245	549	0.62
T2	0.8	1770	1070	706	0.79
	0.9	1730	1100	726	0.82
	1.0	1690	1130	742	0.84
	1.1	1640	1150	753	0.85
	1.2	1590	1180	774	0.88
	1.3	1540	1205	791	0.89
	1.4	1500	1230	798	0.91
	1.5	1465	1255	819	0.93
	1.6	1425	1275	833	0.95
	1.7	1395	1300	839	0.97
	1.8	1350	1335	861	0.99
T3 **	0.8	1290	970	434	0.48
	0.9	1235	1005	449	0.50
	1.0	1165	1040	462	0.52
	1.1	1165	1065	471	0.53
	1.2	1120	1100	488	0.55
	1.3	1090	1130	499	0.56
	1.4	1050	1150	506	0.57
	1.5	975	1180	521	0.59
	1.6	940	1205	530	0.60
	1.7	885	1215	534	0.61
	1.8	855	1245	549	0.62
T4	0.8	1895	1100	802	0.90
	0.9	1855	1130	822	0.93
	1.0	1820	1155	839	0.95
	1.1	1775	1175	850	0.96
	1.2	1725	1205	871	0.99
	1.3	1675	1230	889	1.01
	1.4	1635	1250	898	1.02
	1.5	1595	1275	921	1.04
	1.6	1560	1300	937	1.06
	1.7	1525	1320	944	1.08
	1.8	1480	1355	967	1.11
T5	0.8	1445	1000	509	0.57
	0.9	1395	1035	526	0.59
	1.0	1335	1070	541	0.61
	1.1	1310	1090	550	0.62
	1.2	1265	1125	569	0.64
	1.3	1230	1155	582	0.66
	1.4	1190	1175	588	0.67
	1.5	1130	1200	605	0.69
	1.6	1095	1225	615	0.70
	1.7	1050	1245	620	0.71
	1.8	1010	1275	638	0.73

DSG0483W / DSG0484W 100K ULN HORIZONTAL

SPEED TAP	EXTERNAL STATIC PRESSURE (ESP) in w. c.	AIRFLOW (CFM)	RPM	WATTS	BHP
T1 *	0.8	1330	920	412	0.46
	0.9	1270	955	427	0.48
	1.0	1200	990	439	0.49
	1.1	1200	1010	447	0.50
	1.2	1155	1045	464	0.52
	1.3	1125	1075	474	0.54
	1.4	1080	1095	481	0.55
	1.5	1005	1120	495	0.56
	1.6	970	1145	504	0.57
	1.7	910	1155	507	0.58
	1.8	880	1185	522	0.59
T2	0.8	1825	1015	671	0.75
	0.9	1780	1045	690	0.78
	1.0	1740	1075	705	0.80
	1.1	1690	1095	715	0.81
	1.2	1640	1120	735	0.83
	1.3	1585	1145	751	0.85
	1.4	1545	1170	758	0.87
	1.5	1510	1190	778	0.88
	1.6	1470	1210	791	0.90
	1.7	1435	1235	797	0.92
	1.8	1390	1270	818	0.94
T3 **	0.8	1330	920	412	0.46
	0.9	1270	955	427	0.48
	1.0	1200	990	439	0.49
	1.1	1200	1010	447	0.50
	1.2	1155	1045	464	0.52
	1.3	1125	1075	474	0.54
	1.4	1080	1095	481	0.55
	1.5	1005	1120	495	0.56
	1.6	970	1145	504	0.57
	1.7	910	1155	507	0.58
	1.8	880	1185	522	0.59
T4	0.8	1950	1045	762	0.86
	0.9	1910	1075	781	0.88
	1.0	1875	1095	797	0.90
	1.1	1830	1115	808	0.91
	1.2	1775	1145	827	0.94
	1.3	1725	1170	845	0.96
	1.4	1685	1190	853	0.97
	1.5	1645	1210	875	0.99
	1.6	1605	1235	890	1.01
	1.7	1570	1255	897	1.03
	1.8	1525	1285	919	1.05
T5	0.8	1490	950	484	0.54
	0.9	1435	985	500	0.56
	1.0	1375	1015	514	0.58
	1.1	1350	1035	523	0.59
	1.2	1305	1070	541	0.61
	1.3	1265	1095	553	0.63
	1.4	1225	1115	559	0.64
	1.5	1165	1140	575	0.65
	1.6	1130	1165	584	0.67
	1.7	1080	1185	589	0.68
	1.8	1040	1210	606	0.69

* In DSG0363W / DSG0364W 60K ULN, DSG0363W / DSG0364W 80K ULN, DSG0363W / DSG0364W 100K ULN, DSG0483W / DSG0484W 80K ULN, DSG0483W / DSG0484W 100K ULN, DSG0603W / DSG0604W 80K ULN, AND DSG0603W / DSG0604W 100K ULN DOWNSHOT & HORIZONTAL Tables, T1 AND T1' Values are for fan mode only

** In DSG0363W / DSG0364W 60K ULN, DSG0363W / DSG0364W 80K ULN, DSG0363W / DSG0364W 100K ULN, DSG0483W / DSG0484W 80K ULN, DSG0483W / DSG0484W 100K ULN, DSG0603W / DSG0604W 80K ULN, AND DSG0603W / DSG0604W 100K ULN DOWNSHOT & HORIZONTAL TABLES, T3 and T3' Values are for heat mode only

DSG0483W / DSG0484W 100K ULN DOWNSHOT

SPEED TAP	EXTERNAL STATIC PRESSURE (ESP) in w. c.	AIRFLOW (CFM)	RPM	WATTS	BHP
T1' *	0.8	1720	1060	672	0.76
	0.9	1680	1090	691	0.78
	1.0	1635	1120	707	0.80
	1.1	1585	1140	717	0.81
	1.2	1535	1170	739	0.84
	1.3	1490	1200	754	0.86
	1.4	1450	1220	762	0.87
	1.5	1410	1245	782	0.89
	1.6	1375	1265	795	0.90
	1.7	1340	1290	801	0.92
	1.8	1295	1325	823	0.95
T2'	0.8	1950	1115	851	0.96
	0.9	1915	1145	872	0.98
	1.0	1880	1165	889	1.00
	1.1	1835	1185	900	1.02
	1.2	1790	1215	921	1.04
	1.3	1745	1240	940	1.06
	1.4	1695	1265	949	1.08
	1.5	1660	1290	974	1.11
	1.6	1620	1310	990	1.12
	1.7	1590	1330	997	1.14
	1.8	1545	1365	1021	1.17
T3' **	0.8	1965	1120	864	0.97
	0.9	1925	1145	885	0.99
	1.0	1895	1170	901	1.01
	1.1	1855	1190	913	1.03
	1.2	1805	1220	934	1.06
	1.3	1760	1245	953	1.08
	1.4	1715	1265	962	1.10
	1.5	1675	1290	987	1.12
	1.6	1635	1315	1004	1.14
	1.7	1605	1335	1011	1.16
	1.8	1560	1365	1035	1.18
T4'	0.8	2000	1130	902	1.01
	0.9	1970	1160	923	1.04
	1.0	1935	1180	940	1.06
	1.1	1900	1195	951	1.07
	1.2	1855	1225	972	1.10
	1.3	1810	1250	991	1.12
	1.4	1760	1275	1002	1.14
	1.5	1720	1300	1028	1.16
	1.6	1680	1325	1045	1.19
	1.7	1650	1340	1052	1.20
	1.8	1605	1375	1076	1.23
T5'	0.8	2000	1135	915	1.03
	0.9	1980	1160	936	1.05
	1.0	1950	1180	953	1.07
	1.1	1915	1200	964	1.09
	1.2	1870	1230	985	1.11
	1.3	1825	1255	1004	1.14
	1.4	1775	1280	1015	1.16
	1.5	1735	1305	1041	1.18
	1.6	1695	1325	1059	1.20
	1.7	1660	1345	1066	1.22
	1.8	1620	1375	1090	1.24

DSG0483W / DSG0484W 100K ULN HORIZONTAL

SPEED TAP	EXTERNAL STATIC PRESSURE (ESP) in w. c.	AIRFLOW (CFM)	RPM	WATTS	BHP
T1' *	0.8	1770	1005	638	0.72
	0.9	1730	1035	656	0.74
	1.0	1685	1065	672	0.76
	1.1	1635	1085	681	0.77
	1.2	1580	1110	702	0.79
	1.3	1535	1140	716	0.81
	1.4	1495	1160	724	0.83
	1.5	1450	1185	743	0.85
	1.6	1415	1200	755	0.86
	1.7	1380	1225	761	0.87
	1.8	1335	1260	782	0.90
T2'	0.8	2000	1060	808	0.91
	0.9	1970	1090	828	0.93
	1.0	1935	1105	845	0.95
	1.1	1890	1125	855	0.96
	1.2	1845	1155	875	0.99
	1.3	1795	1180	893	1.01
	1.4	1745	1200	902	1.03
	1.5	1710	1225	925	1.05
	1.6	1670	1245	941	1.07
	1.7	1640	1265	947	1.08
	1.8	1590	1295	970	1.11
T3' **	0.8	-	-	-	-
	0.9	1985	1090	841	0.94
	1.0	1950	1110	856	0.96
	1.1	1910	1130	867	0.98
	1.2	1860	1160	887	1.00
	1.3	1815	1185	905	1.03
	1.4	1765	1200	914	1.04
	1.5	1725	1225	938	1.06
	1.6	1685	1250	954	1.08
	1.7	1655	1270	960	1.10
	1.8	1605	1295	983	1.12
T4'	0.8	2065	1075	857	0.96
	0.9	2030	1100	877	0.98
	1.0	1995	1120	893	1.00
	1.1	1955	1135	903	1.02
	1.2	1910	1165	923	1.04
	1.3	1865	1190	941	1.06
	1.4	1815	1210	952	1.08
	1.5	1770	1235	977	1.11
	1.6	1730	1260	993	1.13
	1.7	1700	1275	999	1.14
	1.8	1655	1305	1022	1.17
T5'	0.8	2080	1080	869	0.98
	0.9	2040	1100	889	0.99
	1.0	2010	1120	905	1.01
	1.1	1970	1140	916	1.03
	1.2	1925	1170	936	1.06
	1.3	1880	1190	954	1.08
	1.4	1830	1215	964	1.10
	1.5	1785	1240	989	1.12
	1.6	1745	1260	1006	1.14
	1.7	1710	1280	1013	1.16
	1.8	1670	1305	1036	1.18

* In DSG0363W / DSG0364W 60K ULN, DSG0363W / DSG0364W 80K ULN, DSG0363W / DSG0364W 100K ULN, DSG0483W / DSG0484W 80K ULN, DSG0483W / DSG0484W 100K ULN, DSG0603W / DSG0604W 80K ULN, AND DSG0603W / DSG0604W 100K ULN DOWNSHOT & HORIZONTAL Tables, T1 AND T1' Values are for fan mode only

** In DSG0363W / DSG0364W 60K ULN, DSG0363W / DSG0364W 80K ULN, DSG0363W / DSG0364W 100K ULN, DSG0483W / DSG0484W 80K ULN, DSG0483W / DSG0484W 100K ULN, DSG0603W / DSG0604W 80K ULN, AND DSG0603W / DSG0604W 100K ULN DOWNSHOT & HORIZONTAL TABLES, T3 and T3' Values are for heat mode only

DSG0603W / DSG0604W 80K ULN HORIZONTAL

SPEED TAP	EXTERNAL STATIC PRESSURE (ESP) in w. c.	AIRFLOW (CFM)	RPM	WATTS	BHP
T1 *	0.8	1680	1030	648	0.66
	0.9	1640	1055	664	0.68
	1.0	1600	1085	681	0.70
	1.1	1555	1115	697	0.72
	1.2	1510	1140	714	0.73
	1.3	1465	1165	730	0.75
	1.4	1410	1195	764	0.77
	1.5	1355	1220	779	0.78
	1.6	1295	1250	777	0.80
	1.7	1250	1275	791	0.82
	1.8	1210	1295	805	0.83
T2	0.8	2200	1160	1110	1.17
	0.9	2170	1185	1128	1.19
	1.0	2135	1205	1148	1.21
	1.1	2105	1230	1168	1.24
	1.2	2065	1255	1189	1.26
	1.3	2030	1275	1209	1.28
	1.4	1985	1295	1225	1.30
	1.5	1945	1320	1243	1.33
	1.6	1910	1340	1265	1.35
	1.7	1870	1360	1286	1.37
	1.8	1830	1380	1305	1.39
T3 **	0.8	1680	1030	648	0.66
	0.9	1640	1055	664	0.68
	1.0	1600	1085	681	0.70
	1.1	1555	1115	697	0.72
	1.2	1510	1140	714	0.73
	1.3	1465	1165	730	0.75
	1.4	1410	1195	764	0.77
	1.5	1355	1220	779	0.78
	1.6	1295	1250	777	0.80
	1.7	1250	1275	791	0.82
	1.8	1210	1295	805	0.83
T4	0.8	2275	1180	1192	1.25
	0.9	2240	1200	1211	1.27
	1.0	2210	1225	1231	1.30
	1.1	2180	1245	1252	1.32
	1.2	2145	1270	1273	1.35
	1.3	2105	1290	1293	1.37
	1.4	2065	1310	1309	1.39
	1.5	2030	1330	1328	1.41
	1.6	1995	1350	1352	1.43
	1.7	1955	1375	1372	1.46
	1.8	1915	1395	1393	1.48
T5	0.8	1825	1065	756	0.79
	0.9	1785	1090	772	0.80
	1.0	1745	1120	790	0.83
	1.1	1710	1145	808	0.85
	1.2	1665	1170	826	0.86
	1.3	1625	1195	843	0.88
	1.4	1570	1220	870	0.90
	1.5	1520	1245	886	0.92
	1.6	1470	1270	892	0.94
	1.7	1430	1295	909	0.96
	1.8	1385	1320	924	0.97

DSG0603W / DSG0604W 80K ULN DOWNSHOT

SPEED TAP	EXTERNAL STATIC PRESSURE (ESP) in w. c.	AIRFLOW (CFM)	RPM	WATTS	BHP
T1 *	0.8	1630	1080	680	0.69
	0.9	1590	1110	697	0.71
	1.0	1550	1140	715	0.73
	1.1	1510	1170	732	0.75
	1.2	1465	1195	750	0.77
	1.3	1420	1225	767	0.79
	1.4	1370	1255	802	0.81
	1.5	1315	1280	818	0.82
	1.6	1255	1315	816	0.84
	1.7	1215	1340	831	0.86
	1.8	1175	1360	845	0.87
T2	0.8	2135	1220	1166	1.23
	0.9	2105	1245	1184	1.25
	1.0	2070	1265	1205	1.27
	1.1	2040	1290	1226	1.30
	1.2	2005	1320	1248	1.33
	1.3	1970	1340	1269	1.35
	1.4	1925	1360	1286	1.37
	1.5	1885	1385	1305	1.39
	1.6	1855	1405	1328	1.41
	1.7	1815	1430	1350	1.44
	1.8	1775	1450	1370	1.46
T3 **	0.8	1630	1080	680	0.69
	0.9	1590	1110	697	0.71
	1.0	1550	1140	715	0.73
	1.1	1510	1170	732	0.75
	1.2	1465	1195	750	0.77
	1.3	1420	1225	767	0.79
	1.4	1370	1255	802	0.81
	1.5	1315	1280	818	0.82
	1.6	1255	1315	816	0.84
	1.7	1215	1340	831	0.86
	1.8	1175	1360	845	0.87
T4	0.8	2205	1240	1252	1.31
	0.9	2175	1260	1272	1.34
	1.0	2145	1285	1293	1.36
	1.1	2115	1305	1315	1.38
	1.2	2080	1335	1337	1.42
	1.3	2040	1355	1358	1.44
	1.4	2005	1375	1374	1.46
	1.5	1970	1395	1394	1.48
	1.6	1935	1420	1420	1.51
	1.7	1895	1445	1441	1.53
	1.8	1860	1465	1463	1.55
T5	0.8	1770	1120	794	0.83
	0.9	1730	1145	811	0.85
	1.0	1695	1175	830	0.87
	1.1	1660	1200	848	0.89
	1.2	1615	1230	867	0.91
	1.3	1575	1255	885	0.93
	1.4	1525	1280	914	0.95
	1.5	1475	1305	930	0.96
	1.6	1425	1335	937	0.99
	1.7	1385	1360	954	1.00
	1.8	1345	1385	970	1.02

* In DSG0363W / DSG0364W 60K ULN, DSG0363W / DSG0364W 80K ULN, DSG0363W / DSG0364W 100K ULN, DSG0483W / DSG0484W 80K ULN, DSG0483W / DSG0484W 100K ULN, DSG0603W / DSG0604W 80K ULN, AND DSG0603W / DSG0604W 100K ULN DOWNSHOT & HORIZONTAL Tables, T1 AND T1' Values are for fan mode only

** In DSG0363W / DSG0364W 60K ULN, DSG0363W / DSG0364W 80K ULN, DSG0363W / DSG0364W 100K ULN, DSG0483W / DSG0484W 80K ULN, DSG0483W / DSG0484W 100K ULN, DSG0603W / DSG0604W 80K ULN, AND DSG0603W / DSG0604W 100K ULN DOWNSHOT & HORIZONTAL TABLES, T3 and T3' Values are for heat mode only

DSG0603W / DSG0604W 80K ULN HORIZONTAL

SPEED TAP	EXTERNAL STATIC PRESSURE (ESP) in w. c.	AIRFLOW (CFM)	RPM	WATTS	BHP
T1' *	0.8	1895	1080	813	0.85
	0.9	1855	1105	829	0.87
	1.0	1820	1135	848	0.89
	1.1	1780	1160	866	0.91
	1.2	1740	1185	884	0.93
	1.3	1700	1210	902	0.95
	1.4	1650	1235	927	0.97
	1.5	1600	1260	943	0.99
	1.6	1555	1285	953	1.01
	1.7	1510	1305	970	1.02
	1.8	-	-	-	-
T2'	0.8	2335	1200	1265	1.33
	0.9	2305	1220	1285	1.35
	1.0	2270	1240	1305	1.37
	1.1	2240	1260	1327	1.40
	1.2	2205	1285	1348	1.42
	1.3	2170	1305	1368	1.45
	1.4	2130	1325	1384	1.47
	1.5	2095	1345	1403	1.49
	1.6	2060	1365	1428	1.51
	1.7	2025	1385	1449	1.53
	1.8	1985	1405	1470	1.56
T3' **	0.8	1895	1080	813	0.85
	0.9	1855	1105	829	0.87
	1.0	1820	1135	848	0.89
	1.1	1780	1160	866	0.91
	1.2	1740	1185	884	0.93
	1.3	1700	1210	902	0.95
	1.4	1650	1235	927	0.97
	1.5	1600	1260	943	0.99
	1.6	1555	1285	953	1.01
	1.7	1510	1305	970	1.02
	1.8	-	-	-	-
T4'	0.8	2405	1220	1354	1.42
	0.9	2375	1235	1374	1.44
	1.0	2345	1260	1394	1.46
	1.1	2315	1280	1416	1.49
	1.2	2280	1300	1438	1.51
	1.3	2245	1320	1459	1.53
	1.4	2205	1340	1474	1.56
	1.5	2170	1360	1494	1.58
	1.6	2135	1380	1520	1.60
	1.7	2100	1400	1542	1.63
	1.8	2065	1420	1564	1.65
T5'	0.8	2030	1115	933	0.98
	0.9	1995	1140	951	1.00
	1.0	1960	1165	970	1.02
	1.1	1925	1190	989	1.05
	1.2	1885	1215	1009	1.07
	1.3	1845	1240	1028	1.09
	1.4	1800	1260	1048	1.11
	1.5	1755	1285	1064	1.13
	1.6	1715	1305	1081	1.15
	1.7	1670	1330	1099	1.17
	1.8	1630	1350	1117	1.19

DSG0603W / DSG0604W 80K ULN DOWNSHOT

SPEED TAP	EXTERNAL STATIC PRESSURE (ESP) in w. c.	AIRFLOW (CFM)	RPM	WATTS	BHP
T1' *	0.8	1840	1135	854	0.89
	0.9	1800	1160	870	0.91
	1.0	1765	1190	890	0.93
	1.1	1725	1220	909	0.96
	1.2	1690	1245	928	0.98
	1.3	1650	1270	947	1.00
	1.4	1600	1295	973	1.02
	1.5	1550	1325	990	1.04
	1.6	1510	1350	1001	1.06
	1.7	1465	1370	1019	1.08
	1.8	1425	1395	1035	1.10
T2'	0.8	2265	1260	1328	1.40
	0.9	2235	1280	1349	1.42
	1.0	2200	1300	1370	1.44
	1.1	2175	1325	1393	1.47
	1.2	2140	1350	1415	1.50
	1.3	2105	1370	1436	1.52
	1.4	2065	1390	1453	1.54
	1.5	2030	1410	1473	1.56
	1.6	2000	1435	1499	1.59
	1.7	1965	1455	1521	1.61
	1.8	1925	1475	1544	1.63
T3' **	0.8	1840	1135	854	0.89
	0.9	1800	1160	870	0.91
	1.0	1765	1190	890	0.93
	1.1	1725	1220	909	0.96
	1.2	1690	1245	928	0.98
	1.3	1650	1270	947	1.00
	1.4	1600	1295	973	1.02
	1.5	1550	1325	990	1.04
	1.6	1510	1350	1001	1.06
	1.7	1465	1370	1019	1.08
	1.8	1425	1395	1035	1.10
T4'	0.8	2335	1280	1422	1.49
	0.9	2305	1295	1443	1.51
	1.0	2275	1325	1464	1.54
	1.1	2245	1345	1487	1.56
	1.2	2210	1365	1510	1.59
	1.3	2180	1385	1532	1.61
	1.4	2140	1405	1548	1.63
	1.5	2105	1430	1569	1.66
	1.6	2070	1450	1596	1.69
	1.7	2035	1470	1619	1.71
	1.8	2005	1490	1642	1.73
T5'	0.8	1970	1170	980	1.03
	0.9	1935	1195	999	1.05
	1.0	1900	1225	1019	1.08
	1.1	1865	1250	1038	1.10
	1.2	1830	1275	1059	1.12
	1.3	1790	1300	1079	1.14
	1.4	1745	1325	1100	1.17
	1.5	1700	1350	1117	1.19
	1.6	1665	1370	1135	1.21
	1.7	1620	1395	1154	1.23
	1.8	1580	1420	1173	1.25

* In DSG0363W / DSG0364W 60K ULN, DSG0363W / DSG0364W 80K ULN, DSG0363W / DSG0364W 100K ULN, DSG0483W / DSG0484W 80K ULN, DSG0483W / DSG0484W 100K ULN, DSG0603W / DSG0604W 80K ULN, AND DSG0603W / DSG0604W 100K ULN DOWNSHOT & HORIZONTAL Tables, T1 AND T1' Values are for fan mode only

** In DSG0363W / DSG0364W 60K ULN, DSG0363W / DSG0364W 80K ULN, DSG0363W / DSG0364W 100K ULN, DSG0483W / DSG0484W 80K ULN, DSG0483W / DSG0484W 100K ULN, DSG0603W / DSG0604W 80K ULN, AND DSG0603W / DSG0604W 100K ULN DOWNSHOT & HORIZONTAL TABLES, T3 and T3' Values are for heat mode only

DSG0603W / DSG0604W 100K ULN HORIZONTAL

SPEED TAP	EXTERNAL STATIC PRESSURE (ESP) in w. c.	AIRFLOW (CFM)	RPM	WATTS	BHP
T1 *	0.8	1025	870	300	0.21
	0.9	965	910	316	0.22
	1.0	905	945	328	0.22
	1.1	840	980	338	0.23
	1.2	790	1010	347	0.24
	1.3	730	1040	354	0.25
	1.4	650	1090	434	0.26
	1.5	-	-	-	-
	1.6	-	-	-	-
	1.7	-	-	-	-
	1.8	-	-	-	-
T2	0.8	2200	1160	1110	1.17
	0.9	2170	1185	1128	1.19
	1.0	2135	1205	1148	1.21
	1.1	2105	1230	1168	1.24
	1.2	2065	1255	1189	1.26
	1.3	2030	1275	1209	1.28
	1.4	1985	1295	1225	1.30
	1.5	1945	1320	1243	1.33
	1.6	1910	1340	1265	1.35
	1.7	1870	1360	1286	1.37
	1.8	1830	1380	1305	1.39
T3 **	0.8	1130	895	341	0.27
	0.9	1075	930	357	0.28
	1.0	1015	965	370	0.29
	1.1	955	1000	381	0.30
	1.2	905	1030	391	0.31
	1.3	850	1060	400	0.32
	1.4	775	1105	471	0.33
	1.5	690	1135	486	0.34
	1.6	600	1175	441	0.35
	1.7	-	-	-	-
	1.8	-	-	-	-
T4	0.8	2275	1180	1192	1.25
	0.9	2240	1200	1211	1.27
	1.0	2210	1225	1231	1.30
	1.1	2180	1245	1252	1.32
	1.2	2145	1270	1273	1.35
	1.3	2105	1290	1293	1.37
	1.4	2065	1310	1309	1.39
	1.5	2030	1330	1328	1.41
	1.6	1995	1350	1352	1.43
	1.7	1955	1375	1372	1.46
	1.8	1915	1395	1393	1.48
T5	0.8	1315	935	425	0.38
	0.9	1260	970	441	0.40
	1.0	1210	1005	456	0.41
	1.1	1155	1035	468	0.42
	1.2	1110	1065	481	0.43
	1.3	1055	1095	492	0.45
	1.4	985	1135	549	0.46
	1.5	915	1160	564	0.47
	1.6	835	1195	535	0.49
	1.7	785	1220	545	0.50
	1.8	740	1245	555	0.51

DSG0603W / DSG0604W 100K ULN DOWNSHOT

SPEED TAP	EXTERNAL STATIC PRESSURE (ESP) in w. c.	AIRFLOW (CFM)	RPM	WATTS	BHP
T1 *	0.8	995	915	315	0.22
	0.9	935	955	332	0.23
	1.0	880	990	344	0.23
	1.1	815	1030	355	0.24
	1.2	765	1060	364	0.25
	1.3	710	1090	372	0.26
	1.4	630	1145	456	0.27
	1.5	-	-	-	-
	1.6	-	-	-	-
	1.7	-	-	-	-
	1.8	-	-	-	-
T2	0.8	2135	1220	1166	1.23
	0.9	2105	1245	1184	1.25
	1.0	2070	1265	1205	1.27
	1.1	2040	1290	1226	1.30
	1.2	2005	1320	1248	1.33
	1.3	1970	1340	1269	1.35
	1.4	1925	1360	1286	1.37
	1.5	1885	1385	1305	1.39
	1.6	1855	1405	1328	1.41
	1.7	1815	1430	1350	1.44
	1.8	1775	1450	1370	1.46
T3 **	0.8	1095	940	358	0.28
	0.9	1045	975	375	0.29
	1.0	985	1015	389	0.30
	1.1	925	1050	400	0.31
	1.2	880	1080	411	0.32
	1.3	825	1115	420	0.33
	1.4	750	1160	495	0.35
	1.5	670	1190	510	0.36
	1.6	580	1235	463	0.37
	1.7	-	-	-	-
	1.8	-	-	-	-
T4	0.8	2205	1240	1252	1.31
	0.9	2175	1260	1272	1.34
	1.0	2145	1285	1293	1.36
	1.1	2115	1305	1315	1.38
	1.2	2080	1335	1337	1.42
	1.3	2040	1355	1358	1.44
	1.4	2005	1375	1374	1.46
	1.5	1970	1395	1394	1.48
	1.6	1935	1420	1420	1.51
	1.7	1895	1445	1441	1.53
	1.8	1860	1465	1463	1.55
T5	0.8	1275	980	446	0.40
	0.9	1220	1020	463	0.42
	1.0	1175	1055	479	0.43
	1.1	1120	1085	491	0.44
	1.2	1075	1120	505	0.46
	1.3	1025	1150	517	0.47
	1.4	955	1190	576	0.49
	1.5	890	1220	592	0.50
	1.6	810	1255	562	0.51
	1.7	760	1280	572	0.52
	1.8	720	1305	583	0.53

* In DSG0363W / DSG0364W 60K ULN, DSG0363W / DSG0364W 80K ULN, DSG0363W / DSG0364W 100K ULN, DSG0483W / DSG0484W 80K ULN, DSG0483W / DSG0484W 100K ULN, DSG0603W / DSG0604W 80K ULN, AND DSG0603W / DSG0604W 100K ULN DOWNSHOT & HORIZONTAL Tables, T1 AND T1' Values are for fan mode only

** In DSG0363W / DSG0364W 60K ULN, DSG0363W / DSG0364W 80K ULN, DSG0363W / DSG0364W 100K ULN, DSG0483W / DSG0484W 80K ULN, DSG0483W / DSG0484W 100K ULN, DSG0603W / DSG0604W 80K ULN, AND DSG0603W / DSG0604W 100K ULN DOWNSHOT & HORIZONTAL TABLES, T3 and T3' Values are for heat mode only

DSG0603W / DSG0604W 100K ULN HORIZONTAL

SPEED TAP	EXTERNAL STATIC PRESSURE (ESP) in w. c.	AIRFLOW (CFM)	RPM	WATTS	BHP
T1' *	0.8	1390	955	465	0.44
	0.9	1340	990	481	0.45
	1.0	1290	1020	496	0.46
	1.1	1240	1050	509	0.48
	1.2	1190	1080	523	0.49
	1.3	1140	1110	535	0.51
	1.4	1075	1145	587	0.52
	1.5	1005	1175	602	0.54
	1.6	930	1205	579	0.55
	1.7	885	1230	590	0.56
	1.8	840	1255	601	0.57
T2'	0.8	2335	1200	1265	1.33
	0.9	2305	1220	1285	1.35
	1.0	2270	1240	1305	1.37
	1.1	2240	1260	1327	1.40
	1.2	2205	1285	1348	1.42
	1.3	2170	1305	1368	1.45
	1.4	2130	1325	1384	1.47
	1.5	2095	1345	1403	1.49
	1.6	2060	1365	1428	1.51
	1.7	2025	1385	1449	1.53
	1.8	1985	1405	1470	1.56
T3' **	0.8	1415	960	479	0.45
	0.9	1365	995	495	0.47
	1.0	1315	1025	510	0.48
	1.1	1265	1055	524	0.50
	1.2	1220	1085	538	0.51
	1.3	1170	1115	550	0.53
	1.4	1105	1150	601	0.54
	1.5	1035	1180	615	0.56
	1.6	965	1210	594	0.57
	1.7	915	1235	605	0.58
	1.8	870	1260	617	0.59
T4'	0.8	2405	1220	1354	1.42
	0.9	2375	1235	1374	1.44
	1.0	2345	1260	1394	1.46
	1.1	2315	1280	1416	1.49
	1.2	2280	1300	1438	1.51
	1.3	2245	1320	1459	1.53
	1.4	2205	1340	1474	1.56
	1.5	2170	1360	1494	1.58
	1.6	2135	1380	1520	1.60
	1.7	2100	1400	1542	1.63
	1.8	2065	1420	1564	1.65
T5'	0.8	1540	990	552	0.54
	0.9	1495	1025	568	0.56
	1.0	1450	1055	585	0.58
	1.1	1400	1085	599	0.60
	1.2	1355	1110	615	0.61
	1.3	1310	1140	629	0.63
	1.4	1250	1170	671	0.64
	1.5	1185	1200	686	0.66
	1.6	1120	1230	674	0.68
	1.7	1075	1250	687	0.69
	1.8	1030	1275	700	0.70

DSG0603W / DSG0604W 100K ULN DOWNSHOT

SPEED TAP	EXTERNAL STATIC PRESSURE (ESP) in w. c.	AIRFLOW (CFM)	RPM	WATTS	BHP
T1' *	0.8	1350	1005	488	0.46
	0.9	1300	1040	505	0.47
	1.0	1250	1070	521	0.49
	1.1	1205	1105	534	0.50
	1.2	1155	1135	549	0.52
	1.3	1105	1165	562	0.53
	1.4	1045	1200	616	0.55
	1.5	975	1235	632	0.56
	1.6	900	1265	608	0.58
	1.7	860	1290	620	0.59
	1.8	815	1320	631	0.60
T2'	0.8	2265	1260	1328	1.40
	0.9	2235	1280	1349	1.42
	1.0	2200	1300	1370	1.44
	1.1	2175	1325	1393	1.47
	1.2	2140	1350	1415	1.50
	1.3	2105	1370	1436	1.52
	1.4	2065	1390	1453	1.54
	1.5	2030	1410	1473	1.56
	1.6	2000	1435	1499	1.59
	1.7	1965	1455	1521	1.61
	1.8	1925	1475	1544	1.63
T3' **	0.8	1375	1010	503	0.48
	0.9	1325	1045	520	0.49
	1.0	1275	1075	536	0.51
	1.1	1225	1110	550	0.52
	1.2	1185	1140	565	0.54
	1.3	1135	1170	578	0.55
	1.4	1070	1210	631	0.57
	1.5	1005	1240	646	0.58
	1.6	935	1270	624	0.60
	1.7	890	1295	635	0.61
	1.8	845	1325	648	0.62
T4'	0.8	2335	1280	1422	1.49
	0.9	2305	1295	1443	1.51
	1.0	2275	1325	1464	1.54
	1.1	2245	1345	1487	1.56
	1.2	2210	1365	1510	1.59
	1.3	2180	1385	1532	1.61
	1.4	2140	1405	1548	1.63
	1.5	2105	1430	1569	1.66
	1.6	2070	1450	1596	1.69
	1.7	2035	1470	1619	1.71
	1.8	2005	1490	1642	1.73
T5'	0.8	1495	1040	580	0.57
	0.9	1450	1075	596	0.59
	1.0	1405	1110	614	0.61
	1.1	1360	1140	629	0.63
	1.2	1315	1165	646	0.64
	1.3	1270	1195	660	0.66
	1.4	1215	1230	705	0.68
	1.5	1150	1260	720	0.69
	1.6	1085	1290	708	0.71
	1.7	1045	1315	721	0.72
	1.8	1000	1340	735	0.74

* In DSG0363W / DSG0364W 60K ULN, DSG0363W / DSG0364W 80K ULN, DSG0363W / DSG0364W 100K ULN, DSG0483W / DSG0484W 80K ULN, DSG0483W / DSG0484W 100K ULN, DSG0603W / DSG0604W 80K ULN, AND DSG0603W / DSG0604W 100K ULN DOWNSHOT & HORIZONTAL Tables, T1 AND T1' Values are for fan mode only

** In DSG0363W / DSG0364W 60K ULN, DSG0363W / DSG0364W 80K ULN, DSG0363W / DSG0364W 100K ULN, DSG0483W / DSG0484W 80K ULN, DSG0483W / DSG0484W 100K ULN, DSG0603W / DSG0604W 80K ULN, AND DSG0603W / DSG0604W 100K ULN DOWNSHOT & HORIZONTAL TABLES, T3 and T3' Values are for heat mode only

Static Pressure

DOWNFLOW ECONOMIZER PRESSURE DROP		
Cabinet	CFM	SP in.wg.
3 Ton	900	.03"
	1200	.05"
	1500	.08"
4 Ton	1200	.06"
	1600	.10"
	2000	.14"
5 Ton	1500	.08"
	2000	.14"
	2500	.22"
6 Ton	1800	.13"
	2400	.22"
	3000	.33"

HORIZONTAL ECONOMIZER PRESSURE DROP		
Cabinet	CFM	SP in.wg.
3 Ton	900	.06"
	1200	.11"
	1500	.16"
4 Ton	1200	.11"
	1600	.19"
	2000	.29"
5 Ton	1500	.18"
	2000	.30"
	2500	.45"
6 Ton	1800	.24"
	2400	.41"
	3000	.61"

CONCENTRIC DIFFUSER 24 X 48 WITH 16" DIA COLLAR PRESSURE DROP		
Cabinet	CFM	DIFFUSER DP
3-6 Ton	1000	0.18
	1200	0.25
	1400	0.33
	1600	0.42
	1800	0.53
	2000	0.64

CONCENTRIC DIFFUSER 24 X 48 WITH 18" DIA COLLAR PRESSURE DROP		
Cabinet	CFM	DIFFUSER DP
3-6 Ton	1000	0.14
	1200	0.20
	1400	0.26
	1600	0.33
	1800	0.41
	2000	0.50
	2400	0.68

INDOOR COIL PRESSURE DROP		
Cabinet	CFM	DP (in W.C)
3 Ton	1160	0.06"
4 Ton	1570	0.13"
5 Ton	1820	0.16"
6 Ton	2100	0.12"

Electrical Data

Model Number	Electrical Rating	Compressor			Outdoor Fan Motor			Indoor Fan Motor			Optional Powered Convenience Outlet	Optional Power Exhaust	Power Supply	
		QTY	RLA	LRA	QTY	HP	FLA	Type	HP	FLA	FLA	FLA	MCA	MOP
DSG0361D	208/230/1/60	1	16.4	88	1	0.17	0.95	1	0.75	5.7	-	-	27.2/27.2	40/40
											9.6/8.7	-	36.8/35.9	50/50
											-	2.2/1.9 (1.7/1.5)	29.4/29.1	45/45
											9.6/8.7	2.2/1.9 (1.7/1.5)	39.0/37.8	50/50
DSG0361DULN	208/230/1/60	1	16.4	88	1	0.17	0.95	1	0.75	5.7	-	-	27.2/27.2	40/40
											9.6/8.7	-	36.8/35.9	50/50
											-	2.2/1.9 (1.7/1.5)	29.4/29.1	45/45
											9.6/8.7	2.2/1.9 (1.7/1.5)	39.0/37.8	50/50
DSG0363D	208/230/3/60	1	10.6	97.5	1	0.17	0.95	1	0.75	5.7	-	-	19.9/19.9	30/30
											9.6/8.7	-	29.5/28.6	40/35
											-	2.2/1.9 (1.7/1.5)	22.1/21.8	30/30
											9.6/8.7	2.2/1.9 (1.7/1.5)	31.7/30.5	40/40
DSG0363DULN	208/230/3/60	1	10.6	97.5	1	0.17	0.95	1	0.75	5.7	-	-	19.9/19.9	30/30
											9.6/8.7	-	29.5/28.6	40/35
											-	2.2/1.9 (1.7/1.5)	22.1/21.8	30/30
											9.6/8.7	2.2/1.9 (1.7/1.5)	31.7/30.5	40/40
DSG0363W	208/230/3/60	1	10.6	97.5	1	0.17	0.95	1	1.2	5	-	-	19.2/19.2	25/25
											9.6/8.7	-	28.8/27.9	35/35
											-	2.2/1.9 (1.7/1.5)	21.4/21.1	30/30
											9.6/8.7	2.2/1.9 (1.7/1.5)	31.0/29.8	40/35
DSG0363WULN	208/230/3/60	1	10.6	97.5	1	0.17	0.95	1	1.2	5	-	-	19.2/19.2	25/25
											9.6/8.7	-	28.8/27.9	35/35
											-	2.2/1.9 (1.7/1.5)	21.4/21.1	30/30
											9.6/8.7	2.2/1.9 (1.7/1.5)	31.0/29.8	40/35
DSG0364D	460/3/60	1	4.9	44.3	1	0.17	0.48	1	1.2	2.5	-	-	9.1	15
											4.3	-	13.4	15
											-	0.9 (0.5)	10.0	15
											4.3	0.9 (0.5)	14.3	15
DSG0364DULN	460/3/60	1	4.9	44.3	1	0.17	0.48	1	1.2	2.5	-	-	9.1	15
											4.3	-	13.4	15
											-	0.9 (0.5)	10.0	15
											4.3	0.9 (0.5)	14.3	15
DSG0364W	460/3/60	1	4.9	44.3	1	0.17	0.48	1	1.2	2.5	-	-	9.1	15
											4.3	-	13.4	15
											-	0.9 (0.5)	10.0	15
											4.3	0.9 (0.5)	14.3	15
DSG0364WULN	460/3/60	1	4.9	44.3	1	0.17	0.48	1	1.2	2.5	-	-	9.1	15
											4.3	-	13.4	15
											-	0.9 (0.5)	10.0	15
											4.3	0.9 (0.5)	14.3	15
DSG0367D	575/3/60	1	3.8	27.1	1	0.17	0.39	1	1.2	2	-	-	7.2	15
											3.5	-	10.7	15
											-	1	8.2	15
											3.5	1	11.7	15

Electrical Data

Model Number	Electrical Rating	Compressor			Outdoor Fan Motor			Indoor Fan Motor			Optional Powered Convenience Outlet	Optional Power Exhaust	Power Supply	
		QTY	RLA	LRA	QTY	HP	FLA	Type	HP	FLA	FLA	FLA	MCA	MOP
DSG0367W	575/3/60	1	3.8	27.1	1	0.17	0.39	1	1.2	2	-	-	7.2	15
											3.5	-	10.7	15
											-	1	8.2	15
											3.5	1	11.7	15
DSG0481D	208/230/1/60	1	19.4	127.7	1	0.33	2	1	1	6.9	-	-	33.1/33.1	50/50
											9.6/8.7	-	42.7/41.8	60/60
											-	2.2/1.9 (1.7/1.5)	35.3/35.0	50/50
											9.6/8.7	2.2/1.9 (1.7/1.5)	44.9/43.7	60/60
DSG0481DULN	208/230/1/60	1	19.4	127.7	1	0.33	2	1	1	6.9	-	-	33.1/33.1	50/50
											9.6/8.7	-	42.7/41.8	60/60
											-	2.2/1.9 (1.7/1.5)	35.3/35.0	50/50
											9.6/8.7	2.2/1.9 (1.7/1.5)	44.9/43.7	60/60
DSG0483D	208/230/3/60	1	12.2	120.4	1	0.33	2	1	1	6.9	-	-	24.1/24.1	35/35
											9.6/8.7	-	33.7/32.8	45/40
											-	2.2/1.9 (1.7/1.5)	26.3/26.0	35/35
											9.6/8.7	2.2/1.9 (1.7/1.5)	35.9/34.7	45/45
DSG0483DULN	208/230/3/60	1	12.2	120.4	1	0.33	2	1	1	6.9	-	-	24.1/24.1	35/35
											9.6/8.7	-	33.7/32.8	45/40
											-	2.2/1.9 (1.7/1.5)	26.3/26.0	35/35
											9.6/8.7	2.2/1.9 (1.7/1.5)	35.9/34.7	45/45
DSG0483W	208/230/3/60	1	12.2	120.4	1	0.33	2	1	1.2	5	-	-	22.2/22.2	30/30
											9.6/8.7	-	31.8/30.9	40/40
											-	2.2/1.9 (1.7/1.5)	24.4/24.1	35/35
											9.6/8.7	2.2/1.9 (1.7/1.5)	34.0/32.8	45/40
DSG0483WULN	208/230/3/60	1	12.2	120.4	1	0.33	2	1	1.2	5	-	-	22.2/22.2	30/30
											9.6/8.7	-	31.8/30.9	40/40
											-	2.2/1.9 (1.7/1.5)	24.4/24.1	35/35
											9.6/8.7	2.2/1.9 (1.7/1.5)	34.0/32.8	45/40
DSG0484D	460/3/60	1	5.8	55.1	1	0.33	0.85	1	1.2	2.5	-	-	10.6	15
											4.3	-	14.9	20
											-	0.9 (0.5)	11.5	15
											4.3	0.9 (0.5)	15.8	20
DSG0484DULN	460/3/60	1	5.8	55.1	1	0.33	0.85	1	1.2	2.5	-	-	10.6	15
											4.3	-	14.9	20
											-	0.9 (0.5)	11.5	15
											4.3	0.9 (0.5)	15.8	20
DSG0484W	460/3/60	1	5.8	55.1	1	0.33	0.85	1	1.2	2.5	-	-	10.6	15
											4.3	-	14.9	20
											-	0.9 (0.5)	11.5	15
											4.3	0.9 (0.5)	15.8	20
DSG0484WULN	460/3/60	1	5.8	55.1	1	0.33	0.85	1	1.2	2.5	-	-	10.6	15
											4.3	-	14.9	20
											-	0.9 (0.5)	11.5	15
											4.3	0.9 (0.5)	15.8	20

Electrical Data

Model Number	Electrical Rating	Compressor			Outdoor Fan Motor			Indoor Fan Motor			Optional Powered Convenience Outlet	Optional Power Exhaust	Power Supply	
		QTY	RLA	LRA	QTY	HP	FLA	Type	HP	FLA	FLA	FLA	MCA	MOP
DSG0487D	575/3/60	1	5.8	41	1	0.33	0.67	1	1.2	2	-	-	9.9	15
											3.5	-	13.4	15
											-	1	10.9	15
											3.5	1	14.4	20
DSG0487W	575/3/60	1	5.8	41	1	0.33	0.67	1	1.2	2	-	-	9.9	15
											3.5	-	13.4	15
											-	1	10.9	15
											3.5	1	14.4	20
DSG0601D	208/230/1/60	1	23.9	148	1	0.33	2	1	1	6.9	-	-	38.7/38.7	60/60
											9.6/8.7	-	48.3/47.4	70/70
											-	2.2/1.9 (1.7/1.5)	40.9/40.6	60/60
											9.6/8.7	2.2/1.9 (1.7/1.5)	50.5/49.3	70/70
DSG0601DULN	208/230/1/60	1	23.9	148	1	0.33	2	1	1	6.9	-	-	38.7/38.7	60/60
											9.6/8.7	-	48.3/47.4	70/70
											-	2.2/1.9 (1.7/1.5)	40.9/40.6	60/60
											9.6/8.7	2.2/1.9 (1.7/1.5)	50.5/49.3	70/70
DSG0603D	208/230/3/60	1	15.4	156.4	1	0.33	2	1	1	6.9	-	-	28.1/28.1	40/40
											9.6/8.7	-	37.7/36.8	50/50
											-	2.2/1.9 (1.7/1.5)	30.3/30.0	45/40
											9.6/8.7	2.2/1.9 (1.7/1.5)	39.9/38.7	50/50
DSG0603DULN	208/230/3/60	1	15.4	156.4	1	0.33	2	1	1	6.9	-	-	28.1/28.1	40/40
											9.6/8.7	-	37.7/36.8	50/50
											-	2.2/1.9 (1.7/1.5)	30.3/30.0	45/40
											9.6/8.7	2.2/1.9 (1.7/1.5)	39.9/38.7	50/50
DSG0603W	208/230/3/60	1	15.4	156.4	1	0.33	2	1	2.3	7.7	-	-	28.9/28.9	40/40
											9.6/8.7	-	38.5/37.6	50/50
											-	2.2/1.9 (1.7/1.5)	31.1/30.8	45/45
											9.6/8.7	2.2/1.9 (1.7/1.5)	40.7/39.5	50/50
DSG0603WULN	208/230/3/60	1	15.4	156.4	1	0.33	2	1	2.3	7.7	-	-	28.9/28.9	40/40
											9.6/8.7	-	38.5/37.6	50/50
											-	2.2/1.9 (1.7/1.5)	31.1/30.8	45/45
											9.6/8.7	2.2/1.9 (1.7/1.5)	40.7/39.5	50/50
DSG0604D	460/3/60	1	7.7	69	1	0.33	0.85	1	1.2	2.5	-	-	13.0	20
											4.3	-	17.3	20
											-	0.9 (0.5)	13.9	20
											4.3	0.9 (0.5)	18.2	25
DSG0604DULN	460/3/60	1	7.7	69	1	0.33	0.85	1	1.2	2.5	-	-	13.0	20
											4.3	-	17.3	20
											-	0.9 (0.5)	13.9	20
											4.3	0.9 (0.5)	18.2	25
DSG0604W	460/3/60	1	7.7	69	1	0.33	0.85	1	2.3	4.5	-	-	15.0	20
											4.3	-	19.3	25
											-	0.9 (0.5)	15.9	20
											4.3	0.9 (0.5)	20.2	25

Electrical Data

Model Number	Electrical Rating	Compressor			Outdoor Fan Motor			Indoor Fan Motor			Optional Powered Convenience Outlet	Optional Power Exhaust	Power Supply	
		QTY	RLA	LRA	QTY	HP	FLA	Type	HP	FLA	FLA	FLA	MCA	MOP
DSG0604WULN	460/3/60	1	7.7	69	1	0.33	0.85	1	2.3	4.5	-	-	15.0	20
											4.3	-	19.3	25
											-	0.9 (0.5)	15.9	20
											4.3	0.9 (0.5)	20.2	25
DSG0607D	575/3/60	1	6.4	47.8	1	0.33	0.67	1	1.2	2	-	-	10.7	15
											3.5	-	14.2	20
											-	1	11.7	15
											3.5	1	15.2	20
DSG0607W	575/3/60	1	6.4	47.8	1	0.33	0.67	1	2.3	3.8	-	-	12.5	15
											3.5	-	16.0	20
											-	1	13.5	15
											3.5	1	17.0	20
DSG0723D	208/230/3/60	1	16.1	155	1	0.33	2	1	1.2	5	-	-	27.2/27.2	40/40
											9.6/8.7	-	36.8/35.9	50/50
											-	2.2/1.9 (1.7/1.5)	29.4/29.1	40/40
											9.6/8.7	2.2/1.9 (1.7/1.5)	39.0/37.8	50/50
DSG0723W	208/230/3/60	1	16.1	155	1	0.33	2	1	2.3	7.7	-	-	29.9/29.9	45/45
											9.6/8.7	-	39.5/38.6	50/50
											-	2.2/1.9 (1.7/1.5)	32.1/31.8	45/45
											9.6/8.7	2.2/1.9 (1.7/1.5)	41.7/40.5	50/50
DSG0724D	460/3/60	1	7	70.8	1	0.33	0.85	1	1.2	2.5	-	-	12.2	15
											4.3	-	16.5	20
											-	0.9 (0.5)	13.1	15
											4.3	0.9 (0.5)	17.4	20
DSG0724W	460/3/60	1	7	70.8	1	0.33	0.85	1	2.3	4.5	-	-	14.2	20
											4.3	-	18.5	25
											-	0.9 (0.5)	15.1	20
											4.3	0.9 (0.5)	19.4	25
DSG0727D	575/3/60	1	6	58.2	1	0.33	0.67	1	1.2	2	-	-	10.2	15
											3.5	-	13.7	15
											-	1	11.2	15
											3.5	1	14.7	20
DSG0727W	575/3/60	1	6	58.2	1	0.33	0.67	1	2.3	3.8	-	-	12.0	15
											3.5	-	15.5	20
											-	1	13.0	15
											3.5	1	16.5	20

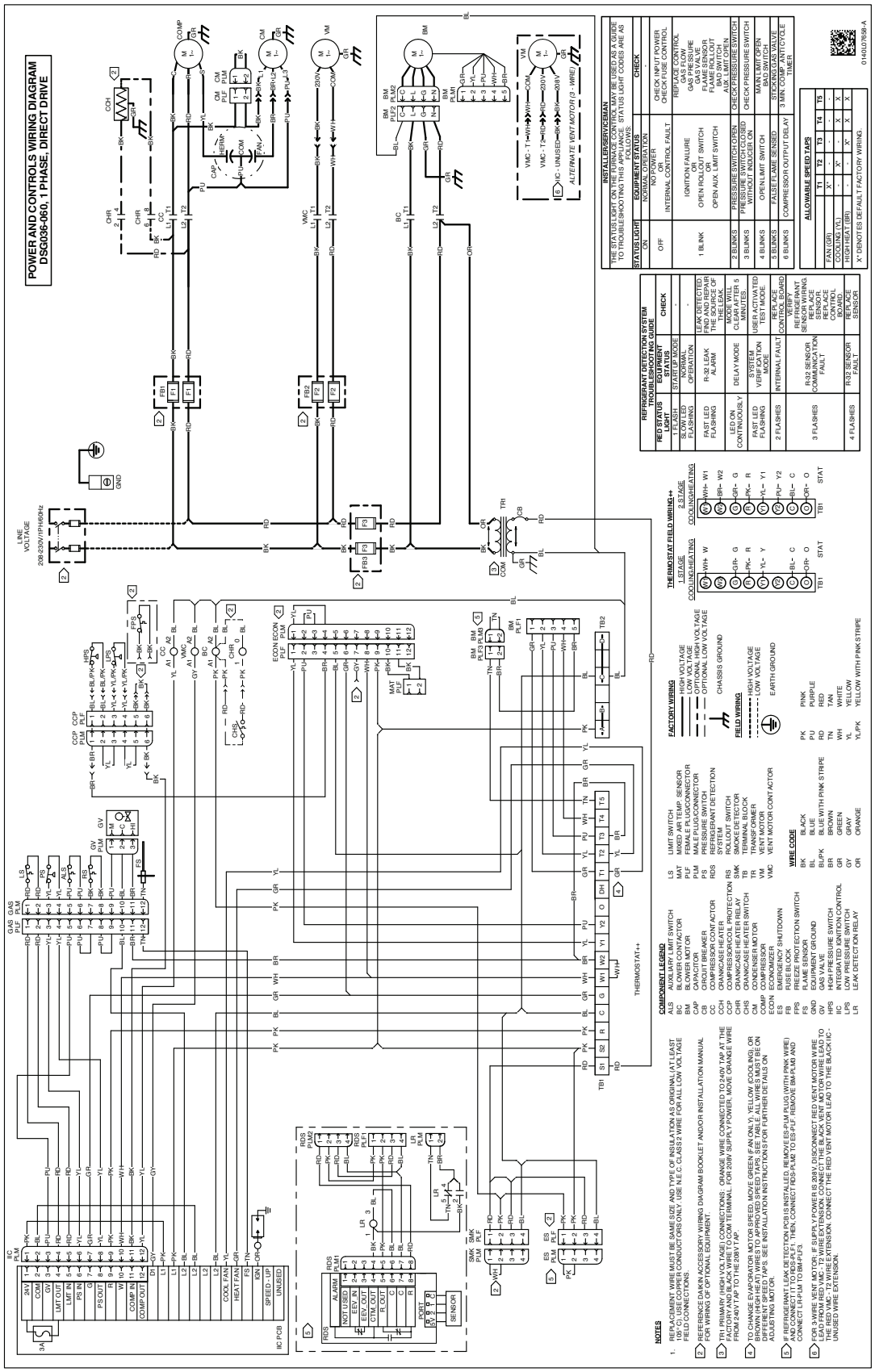

Wiring is subject to change. Always refer to the wiring diagram on the unit for the most up-to-date wiring.

WARNING

High Voltage: Disconnect all power before servicing or installing this unit. Multiple power sources may be present. Failure to do so may cause property damage, personal injury, or death.

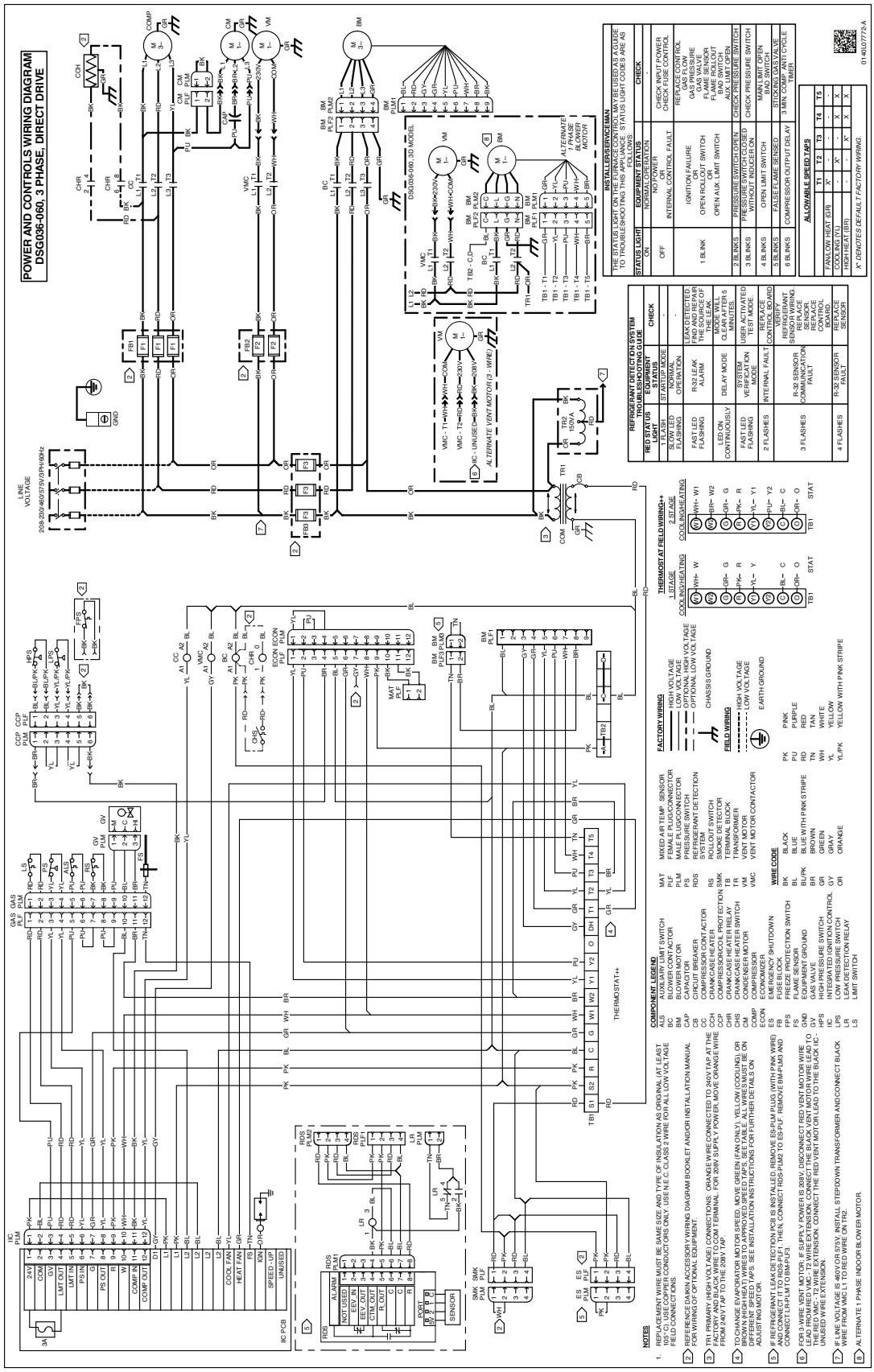

WARNING

High Voltage: Disconnect all power before servicing or installing this unit. Multiple power sources may be present. Failure to do so may cause property damage, personal injury, or death.

Wiring is subject to change. Always refer to the wiring diagram on the unit for the most up-to-date wiring.

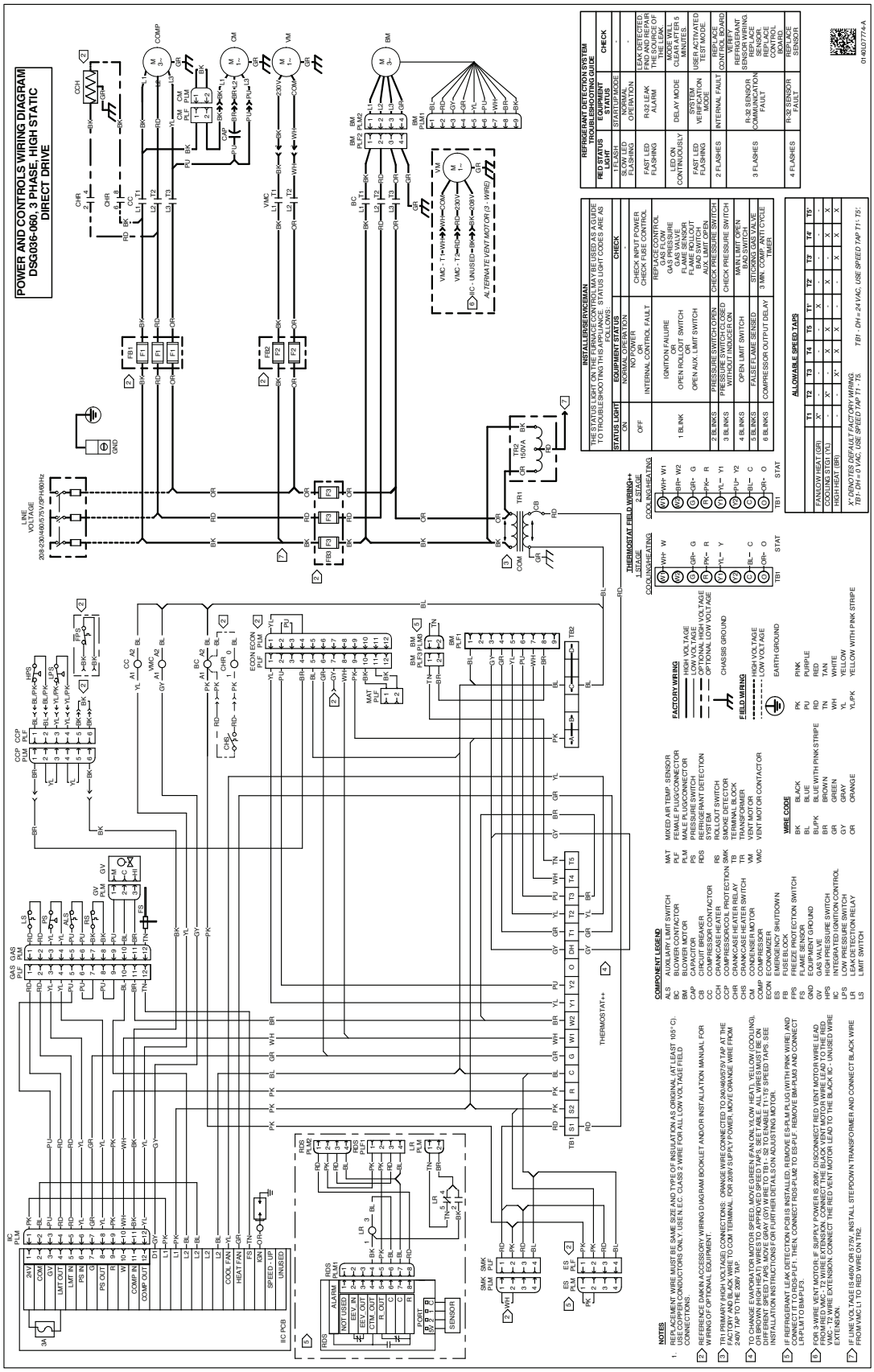

WARNING — ***High Voltage:*** Disconnect all power before servicing or installing this unit. Multiple power sources may be present. Failure to do so may cause property damage, personal injury, or death.

Wiring is subject to change. Always refer to the wiring diagram on the unit for the most up-to-date wiring.

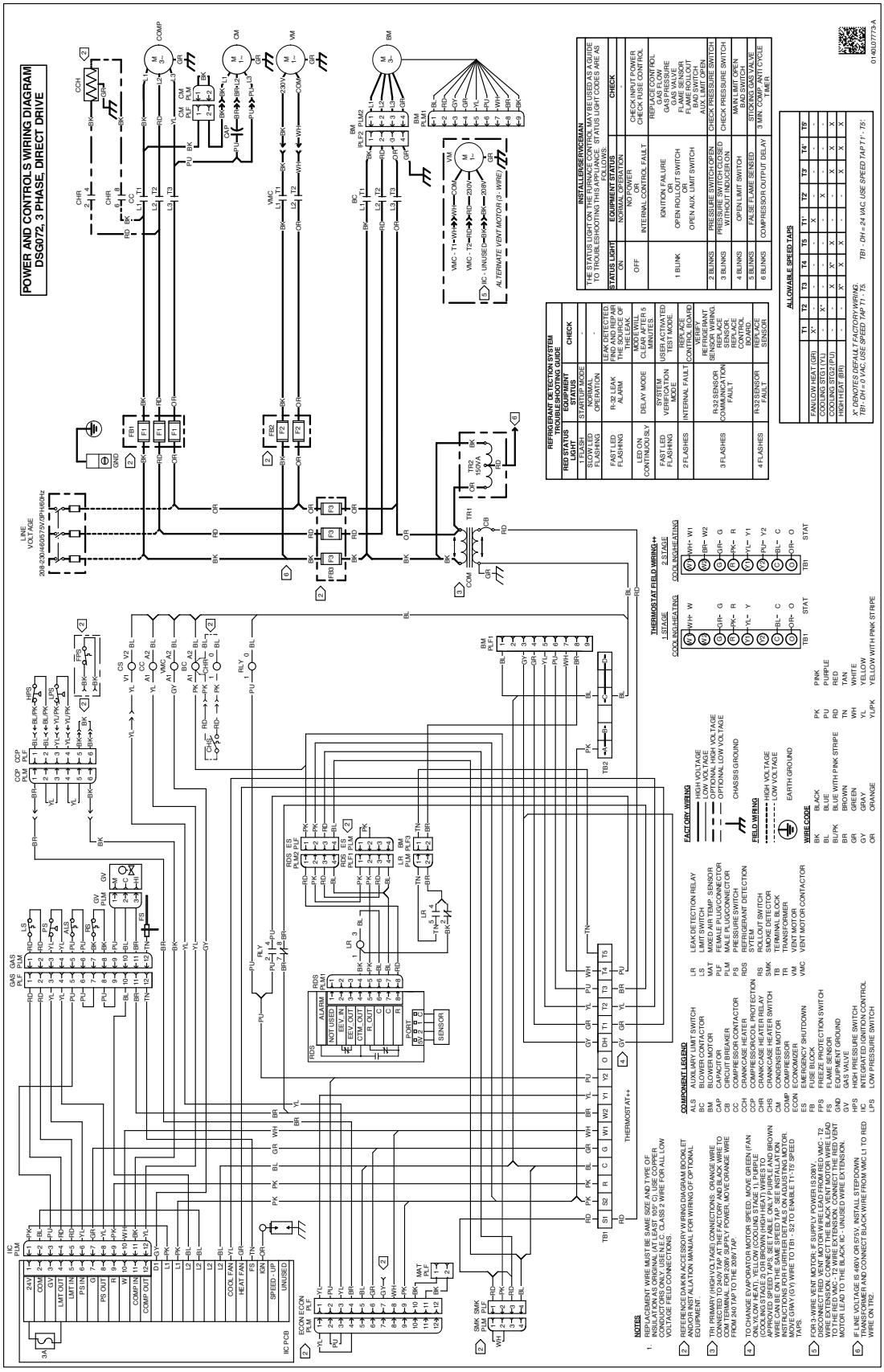

WARNING

High Voltage: Disconnect all power before servicing or installing this unit. Multiple power sources may be present. Failure to do so may cause property damage, personal injury, or death.

Wiring is subject to change. Always refer to the wiring diagram on the unit for the most up-to-date wiring.

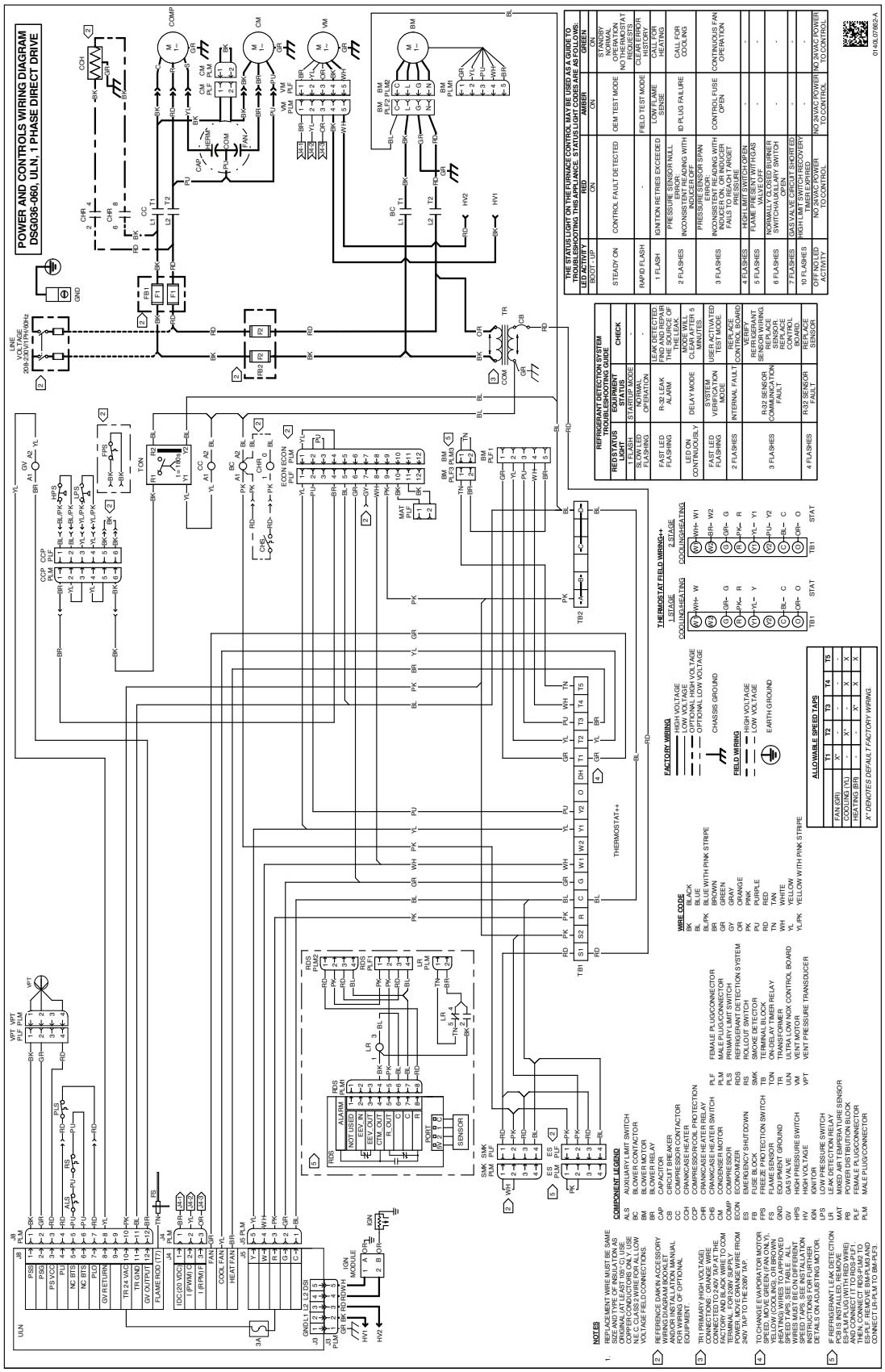

⚠ WARNING

High Voltage: Disconnect all power before servicing or installing this unit. Multiple power sources may be present. Failure to do so may cause property damage, personal injury, or death.

Wiring is subject to change. Always refer to the wiring diagram on the unit for the most up-to-date wiring.

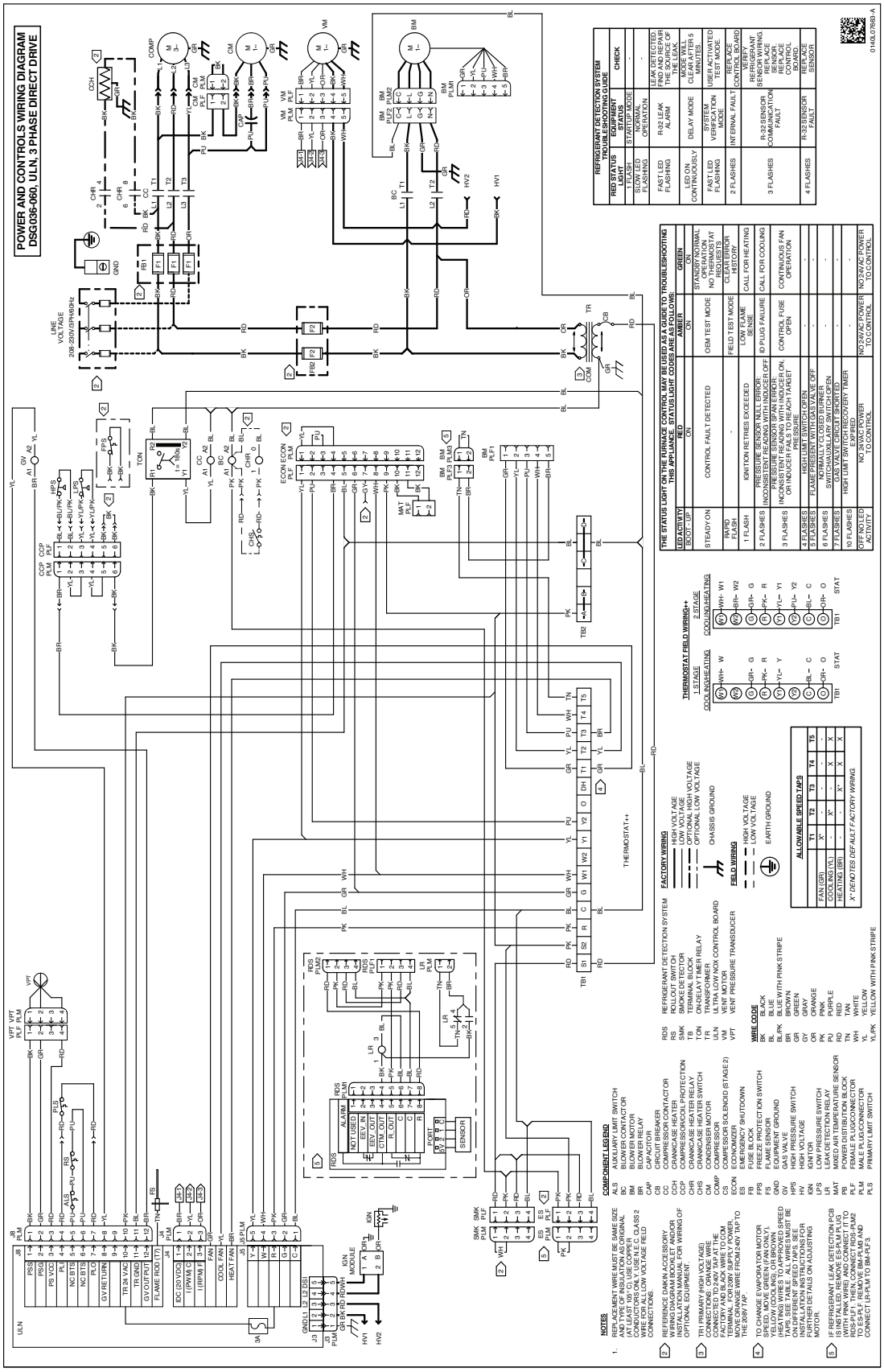

WARNING

High Voltage: Disconnect all power before servicing or installing this unit. Multiple power sources may be present. Failure to do so may cause property damage, personal injury, or death.

Wiring is subject to change. Always refer to the wiring diagram on the unit for the most up-to-date wiring.

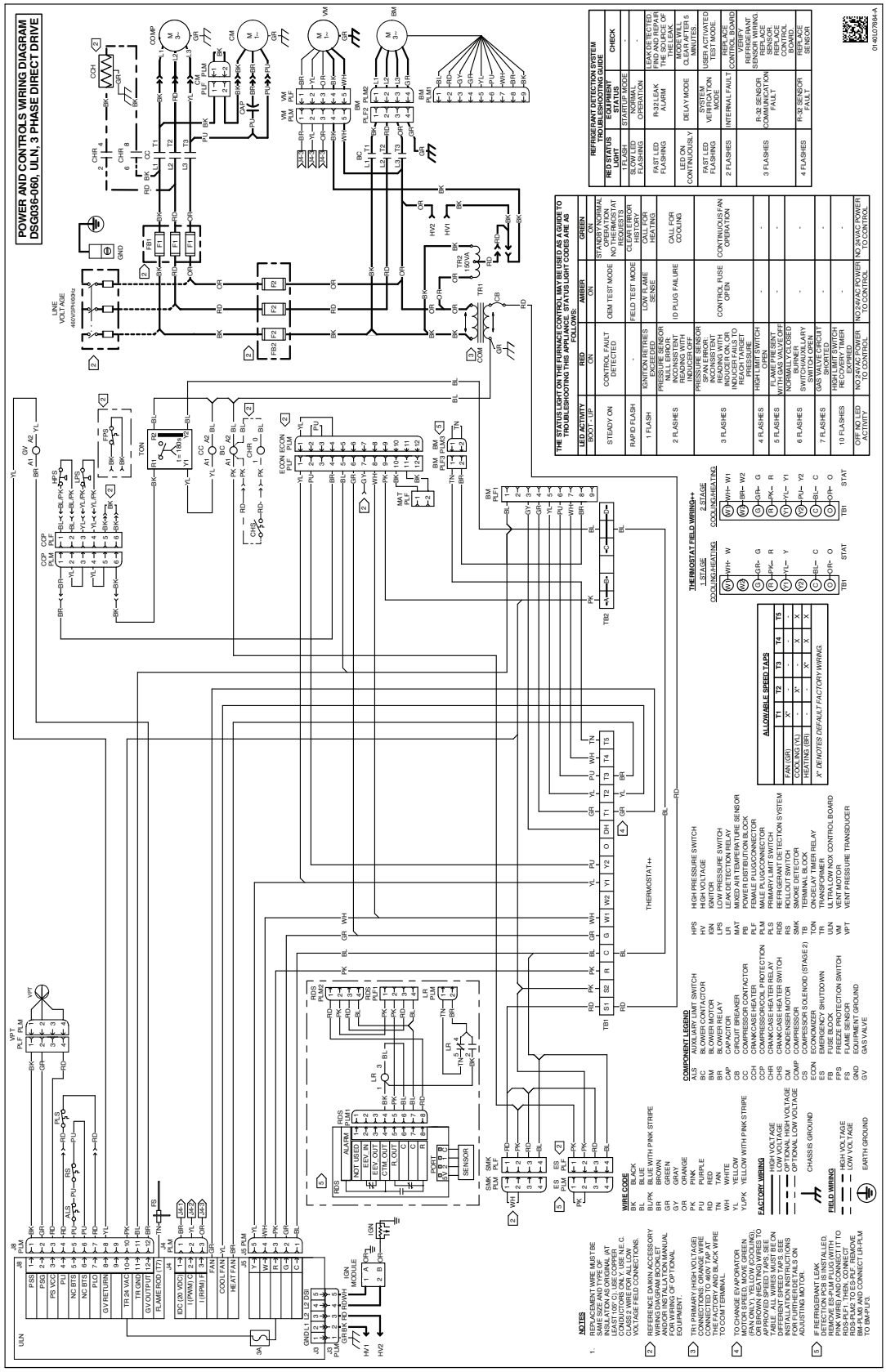

WARNING

High Voltage: Disconnect all power before servicing or installing this unit. Multiple power sources may be present. Failure to do so may cause property damage, personal injury, or death.

Wiring is subject to change. Always refer to the wiring diagram on the unit for the most up-to-date wiring.

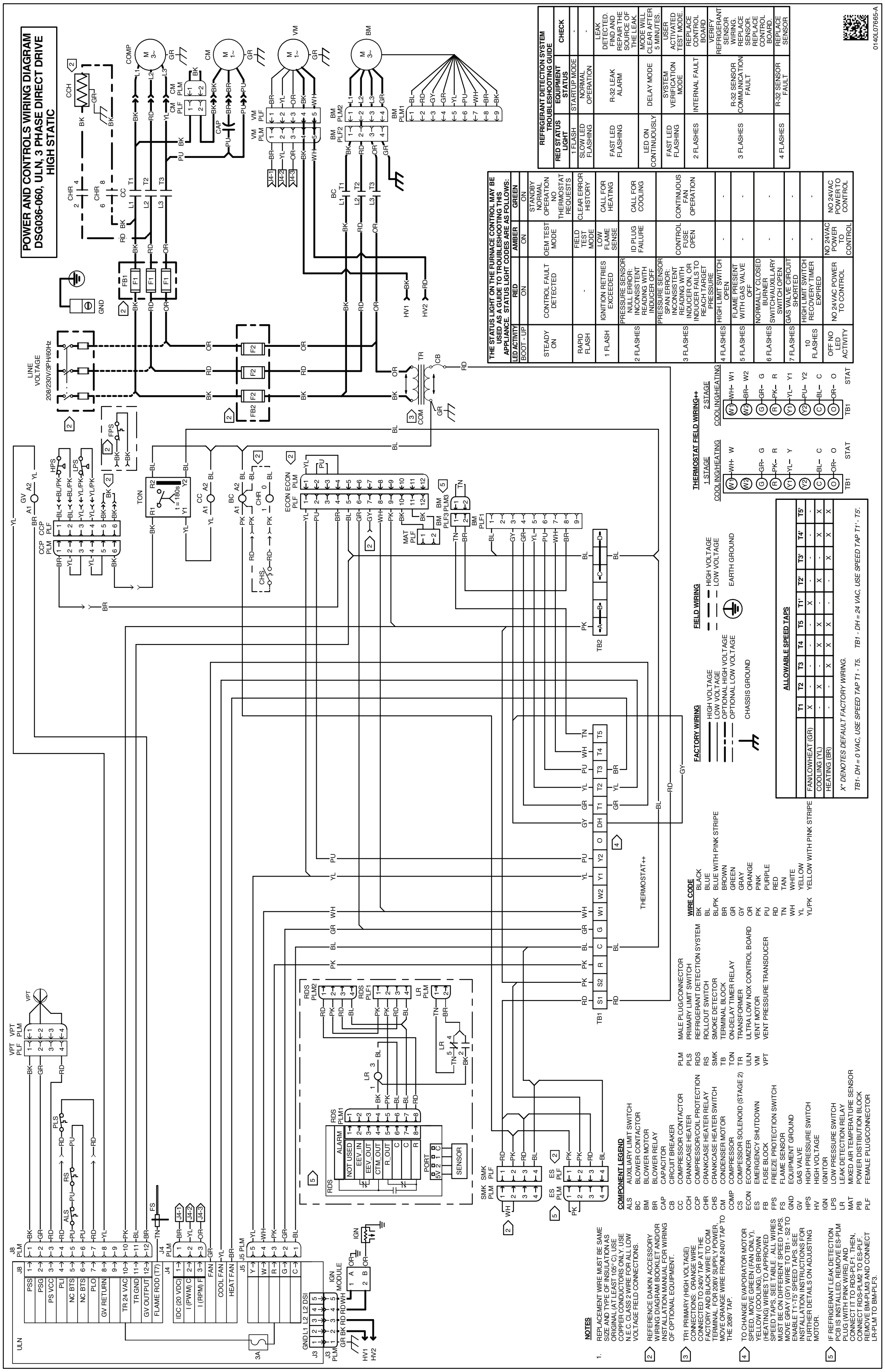

⚠ **WARNING**

High Voltage: Disconnect all power before servicing or installing this unit. Multiple power sources may be present. Failure to do so may cause property damage, personal injury, or death.

Wiring is subject to change. Always refer to the wiring diagram on the unit for the most up-to-date wiring.

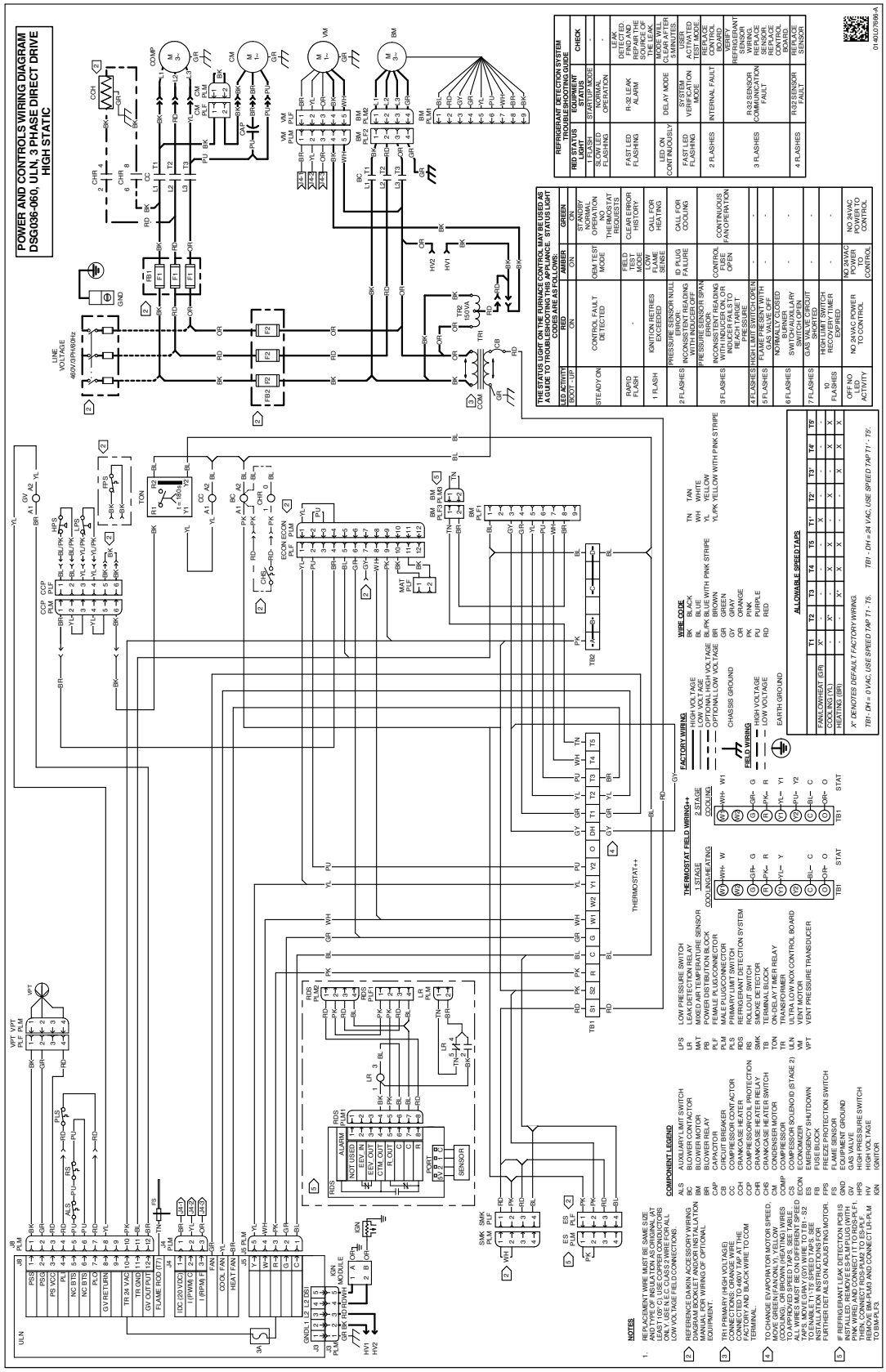

WARNING

High Voltage: Disconnect all power before servicing or installing this unit. Multiple power sources may be present. Failure to do so may cause property damage, personal injury, or death.

Wiring is subject to change. Always refer to the wiring diagram on the unit for the most up-to-date wiring.

Electrical Connections

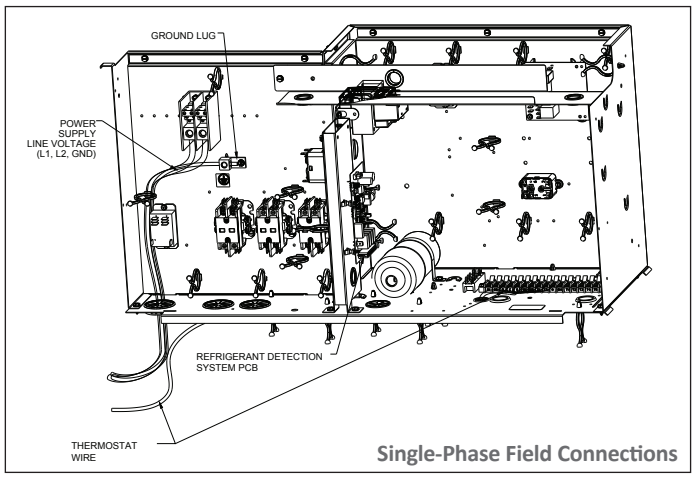

Single-Phase Field Connections

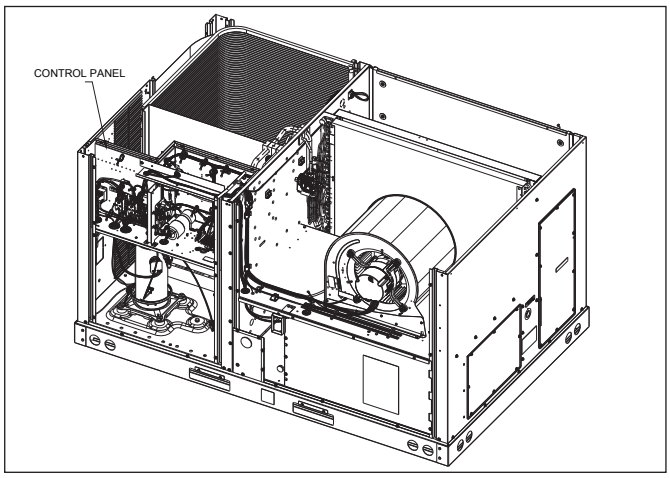

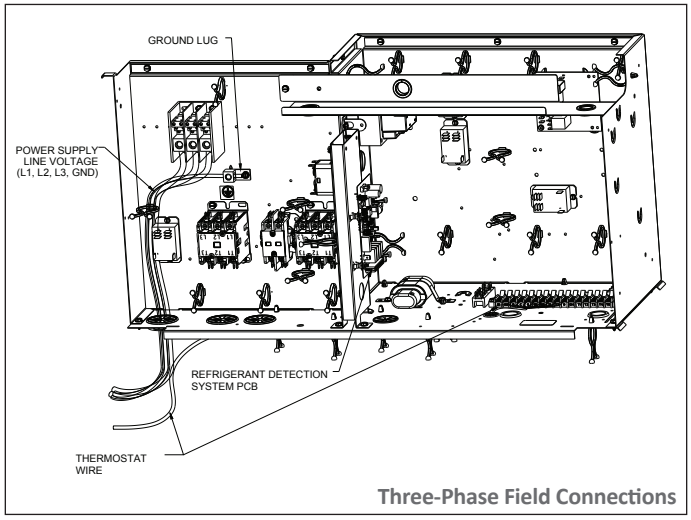

Three-Phase Field Connections

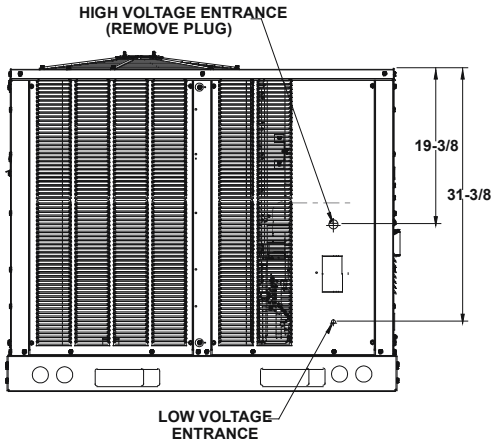

Unit Clearances

Service Clearance

Allow for recommended service clearances as shown in figure to the right. In situations that have multiple units, a 36" minimum clearance is required between the condenser coils. A clearance of 48" is recommended on all sides of the unit to allow service access and to ensure proper ventilation and condenser airflow. The top of the unit should be unobstructed. Provide a roof walkway along the sides of the unit for service and access to controls and components. Contact your Daikin sales representative for service requirements less than those recommended.

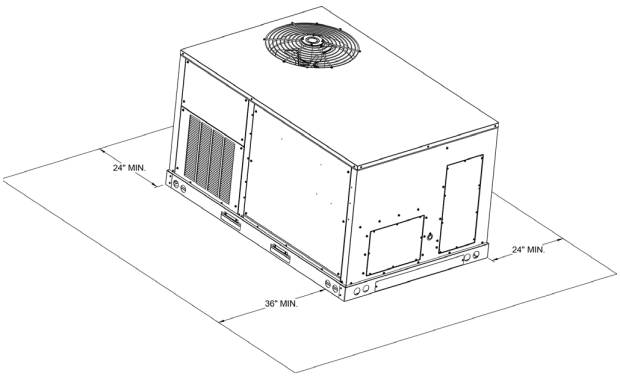

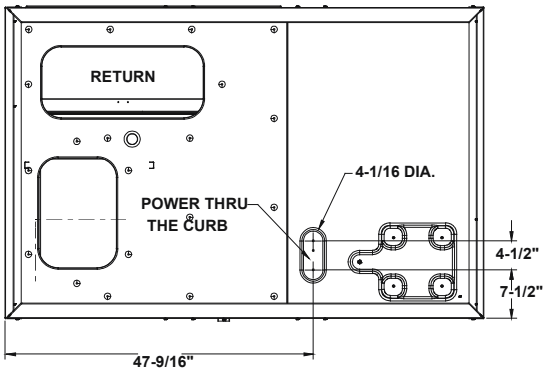

Electrical Entrance and thru Curb (Bottom View of Unit)

Unit Location

The structural engineer must verify that the roof has adequate support and ability to minimize deflection. Take extreme caution when using on a wooden roof structure. Unit condenser coils should be in a location that avoids any heated exhaust air.

Allow sufficient space around the unit for maintenance/service clearance. Consult your Daikin sales representative if available clearances do not meet minimum recommendations.

Where code considerations, such as the NEC, require extended clearances, these take precedence.

Provisions for forks have been included in the unit base frame. No other fork locations are approved.

» Unit must be lifted by the four lifting holes located at the base frame corners.

» Lifting cables should be attached to the unit with shackles.

» The distance between the crane hook and the top of the unit must not be less than 60”.

» Two spreader bars must span over the unit to prevent damage to the cabinet by the lift cables. Spreader bars must be of sufficient length so that cables do not come in contact with the unit during transport. Remove wood struts mounted beneath unit base frame before setting unit on roof curb. These struts are intended to protect unit base frame from forklift damage. To remove the struts, extract the sheet metal retainers and pull the struts through the base of the unit. Refer to rigging label on the unit.

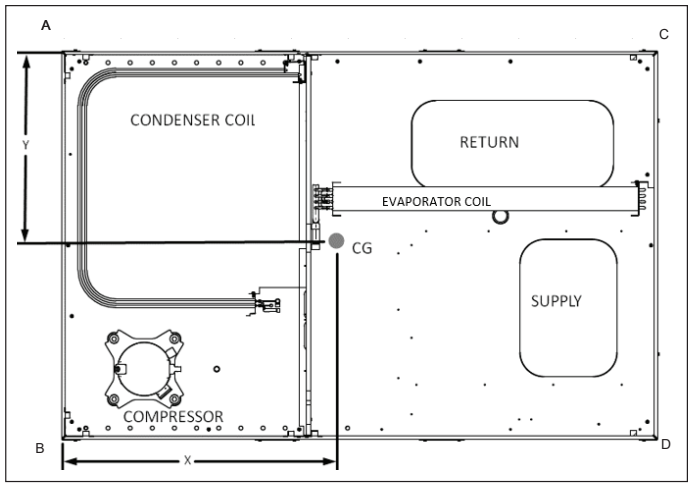

Corner & Center-of-Gravity Locations

Important: If using bottom discharge with roof curb, ductwork should be attached to the curb prior to installing the unit. Refer to the Roof Curb Installation Instructions for proper curb installation. Curbing must be installed in compliance with the National Roofing Contractors Association Manual. Lower unit carefully onto roof mounting curb. While rigging the unit, the center of gravity will cause the condenser end to be lower than the supply air end. Bring condenser end of unit into alignment with the curb. With condenser end of the unit resting on curb member and using curb as a fulcrum, lower opposite end of the unit until entire unit is seated on the curb. When a rectangular cantilever curb is used, take care to center the unit. Check for proper alignment and orientation of supply and return openings with duct.

Roof Curb Installation

The roof curb is field-assembled and must be installed level (within 1/16” per foot side to side). A sub-base must be constructed by the contractor in applications involving pitched roofs. Gaskets are furnished and must be installed between the unit and curb. For proper installation, follow NRCA guidelines. In applications requiring post and rail installation, an I-beam securely mounted on multiple posts should support the unit on each side. In addition, the insulation on the underside of the unit should be protected from the elements. Applications in geographic areas subjected to seismic or hurricane conditions must meet code requirements for fastening the unit to the curb and the curb to the building structure. For further and more detailed information please refer to our Daikin Light Commercial Packaged unit IOD.

Weights

Model	Shipping Weight (lbs)	Operating Weight (lbs)	Corner Weights (lbs)				Length	Width
			A	B	C	D	X (in)	Y(in)
DSG0361DL	570	500	117	142	80	161	35 11/16	29 1/16
DSG0361DH	582	512	117	142	80	173	36 9/16	29 11/16
DSG0361D6	576	506	117	142	80	167	36⅛	29½
DSG0361D8	582	512	117	142	80	173	36 9/16	29 11/16
DSG0361D1	589	519	117	142	80	180	37 1/16	29 15/16
DSG0363DL	568	498	117	140	80	161	35 13/16	29 3/16
DSG0363DM	574	504	117	140	80	167	36¼	29 7/16
DSG0363DH	580	510	117	140	80	173	36 11/16	29⅝
DSG0363D6	574	504	117	140	80	167	36¼	29 7/16
DSG0363D8	580	510	117	140	80	173	36 11/16	29⅝
DSG0363D1	587	517	117	140	80	180	37 3/16	29⅝
DSG0364DL	576	506	117	142	81	166	36⅛	29⅝
DSG0364DM	581	511	117	142	81	171	36½	29 9/16
DSG0364DH	586	516	117	142	81	176	36⅞	29¾
DSG0364D6	581	511	117	142	81	171	36½	29 9/16
DSG0364D8	586	516	117	142	81	176	36⅞	29¾
DSG0364D1	590	520	117	142	81	180	37⅛	29 15/16
DSG0367DH	586	516	117	142	81	176	36⅞	29¾
DSG0481DL	607	537	134	152	87	164	34 9/16	28 7/16
DSG0481DH	623	553	134	152	88	179	35¾	28 15/16
DSG0481D8	607	537	134	152	87	164	34 9/16	28 7/16
DSG0481D1	623	553	134	152	88	179	35¾	28 15/16
DSG0483DL	602	532	134	147	87	164	34 15/16	28¼
DSG0483DM	610	540	134	147	87	172	35½	28 9/16
DSG0483DH	618	548	134	147	88	179	36 1/16	28¾
DSG0483D8	610	540	134	147	87	172	35½	28 9/16
DSG0483D1	618	548	134	147	88	179	36 1/16	28¾
DSG0484DL	606	536	134	147	87	168	35 3/16	28⅜
DSG0484DM	614	544	134	147	87	176	35¾	28 11/16
DSG0484DH	622	552	134	147	88	183	36 5/16	28⅞
DSG0484D8	614	544	134	147	87	176	35¾	28 11/16
DSG0484D1	622	552	134	147	88	183	36 5/16	28⅞
DSG0487DH	622	552	134	147	88	183	36 5/16	28⅞
DSG0601DL	611	541	136	151	87	167	34¾	28⅜
DSG0601DH	628	558	128	157	95	178	36 3/16	29
DSG0601D8	611	541	136	151	87	167	34¾	28⅜
DSG0601D1	624	554	128	157	95	174	35 15/16	28⅞
DSG0603DL	607	537	136	147	87	167	35	28¼
DSG0603DM	620	550	128	153	95	174	36 3/16	28¾
DSG0603DH	624	554	128	153	95	178	36 7/16	28⅞
DSG0603D8	607	537	136	147	87	167	35	28¼
DSG0603D1	620	550	128	153	95	174	36 3/16	28¾
DSG0604DL	611	541	136	147	87	171	35 5/16	28⅜
DSG0604DM	624	554	128	153	95	178	36 7/16	28⅞
DSG0604DH	628	558	128	153	95	182	36¾	29
DSG0604D8	611	541	136	147	87	171	35 5/16	28⅜
DSG0604D1	624	554	128	153	95	178	36 7/16	28⅞
DSG0607DH	628	558	128	153	95	182	36¾	29
DSG0723DL	680	610	143	178	90	199	35 1/16	29⅞
DSG0723DM	688	618	143	178	90	207	35 9/16	30 1/16
DSG0723DH	696	626	143	178	91	214	36 1/16	30¼
DSG0724DL	680	610	143	178	90	199	35 1/16	29⅞
DSG0724DM	688	618	143	178	90	207	35 9/16	30 1/16
DSG0724DH	696	626	143	178	91	214	36 1/16	30¼
DSG0727DL	680	610	143	178	90	199	35 1/16	29⅞
DSG0727DM	688	618	143	178	90	207	35 9/16	30 1/16
DSG0727DH	696	626	143	178	91	214	36 1/16	30¼

For details on accessories refer to document **PM-LC-ACCESSORIES**

Notes

Our continuing commitment to quality products may mean a change in specifications without notice.
©2025 DAIKIN COMFORT TECHNOLGIES MANUFACTURING, L.P. • Houston, Texas • Printed in the USA.