DAIKIN

NEXIO PRO

R-32 Standard Efficiency Air Conditioner
Direct-Drive Packaged Rooftop Unit
7.5 - 12.5 Tons DSC Light Commercial

7.5-10 Ton Up to 16 IEER / 12 EER

12.5 Ton 15.2 IEER / 11.4 EER

5 YEAR PARTS LIMITED WARRANTY*

Intertek

AHRI CERTIFIED

ISO 9001

ISO 14001 CERTIFIED ENVIRONMENTAL MANAGEMENT SYSTEM

R32

*Complete warranty details available from your local distributor or manufacturer's representative or at www.daikincomfort.com

Supersedes 04/26

Our Perfect Package:

Harnessing energy-efficient performance, proven technology, and enhanced comfort for life.

Since becoming the first company in Japan to manufacture packaged air conditioning systems, in 1951, Daikin has supported comfortable indoor living based on the strengths and technologies that have led to the growth of the company becoming one of the world's largest manufacturers of HVAC products, systems and refrigerants.

Today, as a comprehensive global manufacturer of HVAC products and systems, the Daikin brand is committed to being recognized as a truly global and excellent company capable of continually creating new value for its customers. The company plans to pursue sustainable growth and foster business operations that consistently harmonize with the goals of improving indoor comfort.

The group philosophy of the company includes:

- Creating new value continuously for customers
- Developing world leading energy-saving technology
- Being a flexible and dynamic organization
- Allowing employees to be the driving force for the success of the company
- Fostering an atmosphere of best practices, boldness, and innovation
- Thinking and acting globally

Contents

2	**Introduction**	2
4	**Nomenclature**	4
5	**Features and Benefits**	5
	Applications	8
	Serviceability	8
9	**Product Specifications**	9
	Coil Dimensions	14
	AHRI Ratings	14
	Sound Data	14
15	**Dimensional Data**	15
17	**Expanding Cooling Data**	17
25	**Electric Heater Data**	25
26	**Air Flow**	26
43	**Static Pressure**	43
44	**Electrical Data**	44
53	**Wiring Diagrams**	53
54	**Electrical Connections**	54
	Unit Clearances	53
55	**Installation**	55
	Weights	55

For details on accessories refer to document **PM-LC-ACCESSORIES**

Nomenclature

D	S	C	120	3	S	400	C	A	A	X	X	X	X	X	X	X	X	A	*
1	2	3	4,5,6	7	8	9,10,11	12	13	14	15	16	17	18	19	20	21	22	23	24

Brand
D Daikin

Configuration
S R-32 Standard Efficiency
H R-32 High Efficiency
V Inverter (variable speed compressor)

Application
C Cooling
G Gas Heat
H Heat Pump

Nominal Cooling Capacity

036	3 Tons	090	7½ Tons	180	15 Tons
048	4 Tons	102	8½ Tons	240	20 Tons
060	5 Tons	120	10 Tons	300	25 Tons
072	6 Tons	150	12½ tons		

Voltage
1 208-230/1/60
3 208-230/3/60
4 460/3/60
7 575/3/60

Supply Fan/Drive Type/Motor
D Direct Drive- Standard Static
L Direct Drive-Medium Static
W Direct Drive- High Static

Nominal Heating Capacity

Gas/Electric
045 45,000 BTU/h
060 60,000 BTU/h
070 70,000 BTU/h
080 80,000 BTU/h
090 90,000 BTU/h
100 100,000 BTU/h
115 115,000 BTU/h
125 125,000 BTU/h
130 130,000 BTU/h
140 140,000 BTU/h
150 150,000 BTU/h
180 180,000 BTU/h
210 210,000 BTU/h
225 225,000 BTU/h
240 240,000 BTU/h
260 260,000 BTU/h
350 350,000 BTU/h
360 360,000 BTU/h
400 400,000 BTU/h
480 480,000 BTU/h

A/C H/P Factory-Installed Electric Heat
XXX No Heat
005 5kW
010 10 kW
015 15 kW
020 20 kW
030 30 kW
045 45 kW
060 60 kW
075 75kW

Electric Heat w/ SCR controls
S05 5kW
S10 10 kW
S20 20 kW
S22 20 kW
S25 25 kW
S30 30 kW
S45 45 kW
S60 60 kW
S75 75kW

See product specifications for heat size(s) available for each capacity.

Refrigeration Systems
A Single stage cooling modes
C Two stage cooling modes
F Two stage cooling modes with Hot Gas Reheat and Low-ambient control
G Single stage cooling mode with Low-ambient controller
H Two stage cooling mode with Low-ambient controller
I Inverter (variable speed compressor)
J Inverter hot gas reheat (variable speed compressor)

Heat Exchanger
X No options
A Standard Aluminized Exchanger
S Stainless Steel Exchanger
U Ultra Low No_x

Controls
A Electromechanical controls
B DDC w/ BACnet interface
I Inverter with Single-Zone Variable Air Volume (SZ VAV)
M Inverter with Multi-Zone Variable Air Volume (MZ VAV)
D Inverter with DKN+ (SZ VAV)
E Inverter with DKN+ (3rd Party Thermostat)

Sensors
D R-32 Sensor
E RA Smoke Detector w/ R32 Sensor
F SA Smoke Detector w/ R32 Sensor
G RA & SA Smoke Detector w/ R32 Sensor

Coils, Hail guard
X No Options
C Hail Guard

Economizer
X No Options
A Ultra Low-Leak Downflow Economizer w/ Enthalpy Sensor
C Ultra Low-Leak Internal Horizontal Economizer w/ Enthalpy Sensor
E Ultra Low-Leak Downflow Economizer for DDC controls w/ Enthalpy Sensor
F Ultra Low-Leak Horizontal Economizer for DDC controls w/ Enthalpy Sensor
G Ultra Low-Leak Downflow Economizer w/ Dry Bulb Sensor
J Ultra Low-Leak Internal Horizontal Economizer w/ Dry Bulb Sensor
L Ultra Low-Leak Downflow Economizer for DDC controls w/ Dry Bulb Sensor
M Ultra Low-Leak Horizontal Economizer for DDC controls w/ Dry Bulb Sensor

Electrical
X No Options
A Non-Fused Disconnect
B Phase Monitor
C Thru-the-base connections
D SCCR
E Non-Fused Disconnect and Phase Monitor
F Non-Fused Disconnect and Thru-the-base connectons
G Non-Fused Disconnect and SCCR
H Phase Monitor and Thru-the-base connections
J Phase Monitor and SCCR
K Thru-the-base connections and SCCR
L Non-Fused Disconnect, Thru-the-base connectons and Phase Monitor
M Non-Fused Disconnect, Phase Monitor and SCCR
N Non-Fused Disconnect, Thru-the-base connectons and SCCR
P Phase Monitor, Thru-the-base connections and SCCR
Q Non-Fused Disconnect, Thru-the-base connectons, Phase Monitor and SCCR

Service Options
A Powered convenience outlet
B Non-powered convenience outlet
C Hinge Panels
D Hinged Panels and Powered convenience outlet
E Hinged Panels and non-powered convenience outlet
X No Options

IAQ
X No Options

PE Connection
X No Options
B Single point power connection for Power Exhaust
T Single point power connection for Power Exhaust (w/ Transformer)

X No Options

Revision Levels
Major & Minor

AC Stocking Models

New Daikin 7.5-12.5 Ton Direct-Drive

Model Number	Code String	Model Number	Code String
DSC0903D000001S	DSC0903DXXXCXADXXXXXXX	DSC1207D000001S	DSC1207DXXXCXADXXXXXXX
DSC0904D000001S	DSC0904DXXXCXADXXXXXXX	DSC1503D000001S	DSC1503DXXXCXADXXXXXXX
DSC0907D000001S	DSC0907DXXXCXADXXXXXXX	DSC1504D000001S	DSC1504DXXXCXADXXXXXXX
DSC1023D000001S	DSC1023DXXXCXADXXXXXXX	DSC1507D000001S	DSC1507DXXXCXADXXXXXXX
DSC1024D000001S	DSC1024DXXXCXADXXXXXXX	DSC1503W000001F	DSC1503LXXXCXADXXXXXXX
DSC1027D000001S	DSC1027DXXXCXADXXXXXXX	DSC1504W000001F	DSC1504LXXXCXADXXXXXXX
DSC1203D000001S	DSC1203DXXXCXADXXXXXXX	DSC1507W000001F	DSC1507LXXXCXADXXXXXXX
DSC1204D000001S	DSC1204DXXXCXADXXXXXXX		

Daikin Packaged Rooftop Units (RTUs) are built to perform, with features and options that help provide low installation and operation costs, superior indoor air quality, efficient operation, and longevity.

Installation

Daikin Packaged units are designed with fast and easy installation in mind and are ideal for both new construction and retrofit projects. Our packaged rooftop units are built to be a direct replacement for most rooftop units in the field without the need of a curb adapter.

Cabinet Construction

Daikin packaged rooftop units are made with high quality galvanized steel with a powder-paint finish to provide higher corrosion resistance.

» Easy accessibility using our tool-less filter access.

» Unit is fully insulated to prevent sweating and thermal losses, using our foil face fiberglass insulation which also omits exposed filter fibers into the airstream

» 1" Raised flanged edges around the supply and return offer easy installation for the duct connections.

» The full perimeter base rail is built using heavy gauge galvanized steel for a stronger structural installation, the base rails are a minimum of 3 ½" tall and include holes to allow for overhead rigging and lifting with forklifts.

» Electrical lines and can be brought through the base of the unit or through the horizontal knockout for easy installation and accessibility on the field.

Compressor

High performance, low noise scroll compressors to match the required total load.

» Resiliently factory-mounted on rubber grommets for vibration isolation

» Refrigeration circuits includes both low and high pressure safety switches.

» Unit is factory charged with environmentally friendly Low GWP R32 refrigerant.

» Two single-stage scroll compressor

» Compressors located outside the condenser section to avoid air bypass.

» Internal overload protection included with compressor.

Supply Fan

Indoor forward curved fan, paired with direct-drive motor, provide for easy airflow control.

» Ball bearing Direct-Drive EEM motor removes the need for belts, sheaves, bearings and lubrication.

» Slide out forward curb fan for easy maintenance and replacement.

» High-static drive options for application with high airflow/ static requirements.

» Each fan assembly is dynamically trim balanced at the factory before shipment for quick start-up and efficient operation.

» Motor with thermal overload is provided for motor long lasting operation.

Coils

All units use large face area outdoor coils. These coils are constructed with microchannel technology for high operating efficiencies.

The indoor coil section is installed in a draw through configuration to provide better dehumidification.

» Microchannel heat exchanger technology on all condenser coils for improved performance and reduced refrigerant load.

» All units use large face area outdoor coils.

» Coils are factory pressure tested to ensure pressure and leak integrity.

» Copper tube / aluminum fin coils evaporator coils

Controls and Wiring

Packaged rooftop units come equipped with a well-organized, large, easy to use weatherproof internal control box with easy access, for a better user experience.

» Units are factory-wired with color-coded wires and complete 24-volt Electromechanical controls package.

» Units include single-point power entry as standard and also available with electric heat kits if selected.

» Terminal strip is provided as standard for easy installation and low voltage power wiring.

Filtration

Unit provides a draw-through filter section as standard for better air quality and long lasting component maintenance.

» Filters installed on the units are standard off the shelf sizes for easy replacement.

» Tool-less filter access for easy and fast filter replacement and service.

Heating Section

Wide range of electric heat selections effectively handle most comfort heating demand from morning warm-up control to full heat.

Electric Heat

ETL approved electric heat is factory assembled, installed and tested.

» Heating control is fully integrated into the unit's control system for quick start-up and reliable control.

» Durable low watt density, nickel chromium elements provide longer life (compared to units without).

» Fuses are provided in each branch circuit to a maximum of 48 Amps per NEC requirements.

» Single-point power connection reduces installation cost.

» For operational safeties electric heat includes automatic reset, and high temperature limit safety protection.

Electrical

Units are completely wired and tested at the factory to provide faster commissioning and start-up.

» Wiring complies with NEC requirements and all applicable UL standards.

» Units are factory-wired with color-coded wires and complete 24-volt electromechanical controls package.

» A 115 V GFI convenience receptacle requiring independent power supply for the receptacle is optional.

» An optional unit powered 20 amp 115 V convenience receptacle, complete with factory mounted transformer, disconnect switch, and primary and secondary overload protection, eliminates the need to pull a separate 115 V power source.

» Supply air fan, compressor, and condenser fan motor branch circuits have individual short circuit protection.

» A single-point power connection with power block is standard and a terminal strip is provided for connecting low voltage control wiring.

» For better serviceability an optional non-fused disconnect switch can be installed inside the control panel and operated by an externally mounted handle to disconnect the electrical power at the unit

DAIKIN

Applications

Daikin Rooftop units are intended for comfort cooling applications in normal heating, ventilating, and air conditioning. Consult your local Daikin sales representative for applications involving operations at high ambient temperatures, high altitudes, non-cataloged voltages, or for job-specific unit selections that fall outside of the range of the catalog tables.

For proper operation, units should be rigged in accordance with instructions stated on the installation manual. Fire dampers, if required, must be installed in the ductwork according to local and/or state codes. No space is allowed for these dampers in the unit.

Follow factory check, test and start procedures explicitly to achieve satisfactory start-up and operation.

Most rooftop applications take advantage of the significant energy savings provided with economizer operation. When an economizer system is used, mechanical refrigeration is typically not required below an ambient temperature of 50°F.

Serviceability

Daikin packaged rooftop units are built with serviceability in mind, designed to make future maintenance and service on the unit easy and accessible.

- Our packaged rooftop units offer a slide out blower to facilitate the access and removal of the fan.
- Filter panels offer tool-less access for easy maintenance.
- Independent compressors outside of the air bypass to eliminate component blockage and provide easy access.
- Color coded wire to identify point-to-point component connections.
- All 7.5-12.5 ton units are designed for convertible airflow orientation to serve downflow or horizontal applications. Every unit ships prepared to convert to horizontal orientation in the field if required.

Model	DSC0903D000001S	DSC0904D000001S	DSC0907D000001S
COOLING CAPACITY			
Total BTU/H	90,000	90,000	90,000
IEER / EER	16.0/12.0	16.0/12.0	16.0/12.0
AHRI Reference #	215440977	215440978	215440979
EVAPORATOR MOTOR / RTPF (ROUND TUBE PLATE FIN)			
Motor Type	Direct Drive	Direct Drive	Direct Drive
External Static Pressure (ESP)	Standard	Standard	Standard
Wheel Dia. X Width	15x12	15x12	15x12
Indoor Nominal CFM	3020	3020	3020
RPM	300-1600	300-1600	300-1600
Indoor Horsepower	2.4	2.4	2.4
Filter Size (in)	20 X 20 X 2 (2) 20 X 25 X 2 (2)	20 X 20 X 2 (2) 20 X 25 X 2 (2)	20 X 20 X 2 (2) 20 X 25 X 2 (2)
Drain Size (NPT)	3/4	3/4	3/4
R-32 Refrigerant Charge (oz.) Cir #1 & 2	53/53	53/53	53/53
Evaporator Coil Face Area (ft^2)	13.3	13.3	13.3
Rows Deep/ Fins per Inch	2 / 16	2 / 16	2 / 16
CONDENSER FAN / MCHX (MICROCHANNEL HEAT EXCHANGER)			
Quantity of Condenser Fan Motors	2	2	2
RPM (High/Low stage)	1122	1050	1050
Outdoor Horsepower	1/3	1/3	1/3
Fan Diameter/ # Fan Blades	22 / 3	22 / 3	22 / 3
Face Area (ft^2)	29.1	29.1	29.1
Rows Deep / Fins per Inch	1 / 23	1 / 23	1 / 23
COMPRESSOR			
Quantity / Type / Stages per Compressor	2/ Scroll / 1	2/ Scroll / 1	2/ Scroll / 1
Compressor RLA / LRA	12.2/120	5.8/55.1	5.8/41
ELECTRICAL DATA			
Voltage-Phase-Frequency	208/230-3-60	460-3-60	575-3-60
Indoor Blower FLA	8	5.4	4.0
Max External Static (In. W.C.)	0.8	0.8	0.8
Outdoor Fan FLA	2	0.85	0.67
Min. Circuit Ampacity[1]	39.4/39.4	20.1	18.3
Max. Overcurrent Protection (A)[2]	50/50	25	20
Power Supply Conduit Hole Dia. (in)	1.375	1.375	1.375
Low-Voltage Conduit Hole Dia. (in)	0.5	0.5	0.5
OPERATING WEIGHT (LBS.)			
Operating Weight (lbs)	1015	1015	1015
SHIPPING WEIGHT (LBS.)			
Ship Weight (lbs)	1087	1087	1087

[1] Wire size should be determined in accordance with National Electrical Codes. Extensive wire runs will require larger wire sizes.
[2] May use fuses or HACR-type circuit breakers of the same size as noted.
Note: Always check the S&R plate for electrical data on the unit being installed.

Model	DSC1023D000001S	DSC1024D000001S	DSC1027D000001S
COOLING CAPACITY			
Total BTU/H	97,000	97,000	97,000
IEER / EER	15.5/11.4	15.5/11.4	15.5/11.4
AHRI Reference #	215440980	215440981	215440982
EVAPORATOR MOTOR / RTPF (ROUND TUBE PLATE FIN)			
Motor Type	Direct Drive	Direct Drive	Direct Drive
External Static Pressure (ESP)	Standard	Standard	Standard
Wheel Dia. X Width	15x12	15x12	15x12
Indoor Nominal CFM	3230	3230	3230
RPM	300-1600	300-1600	300-1600
Indoor Horsepower	2.4	2.4	2.4
Filter Size (in)	20 X 20 X 2 (2) 20 X 25 X 2 (2)	20 X 20 X 2 (2) 20 X 25 X 2 (2)	20 X 20 X 2 (2) 20 X 25 X 2 (2)
Drain Size (NPT)	3/4	3/4	3/4
R-32 Refrigerant Charge (oz.) Cir #1 & 2	56/56	56/56	56/56
Evaporator Coil Face Area (ft^2)	13.3	13.3	13.3
Rows Deep/ Fins per Inch	2 / 16	2 / 16	2 / 16
CONDENSER FAN / MCHX (MICROCHANNEL HEAT EXCHANGER)			
Quantity of Condenser Fan Motors	2	2	2
RPM (High/Low stage)	1122	1050	1050
Outdoor Horsepower	1/3	1/3	1/3
Fan Diameter/ # Fan Blades	22 / 3	22 / 3	22 / 3
Face Area (ft^2)	29.1	29.1	29.1
Rows Deep / Fins per Inch	1 / 23	1 / 23	1 / 23
COMPRESSOR			
Quantity / Type / Stages per Compressor	2/ Scroll / 1	2/ Scroll / 1	2/ Scroll / 1
Compressor RLA / LRA	14.1/120	6.4/55.1	5.1/41
ELECTRICAL DATA			
Voltage-Phase-Frequency	208/230-3-60	460-3-60	575-3-60
Indoor Blower FLA	8	5.4	4.0
Max External Static (In. W.C.)	0.8	0.8	0.8
Outdoor Fan FLA	2	0.85	0.67
Min. Circuit Ampacity[1]	43.7/43.7	21.5	16.9
Max. Overcurrent Protection (A)[2]	50 / 50	25	20
Power Supply Conduit Hole Dia. (in)	1.375	1.375	1.375
Low-Voltage Conduit Hole Dia. (in)	0.5	0.5	0.5
OPERATING WEIGHT (LBS.)			
Operating Weight (lbs)	1027	1027	1027
SHIPPING WEIGHT (LBS.)			
Ship Weight (lbs)	1099	1099	1099

[1] Wire size should be determined in accordance with National Electrical Codes. Extensive wire runs will require larger wire sizes.
[2] May use fuses or HACR-type circuit breakers of the same size as noted.
Note: Always check the S&R plate for electrical data on the unit being installed.

Model	DSC1203D000001S	DSC1204D000001S	DSC1207D000001S
COOLING CAPACITY			
Total BTU/H	116,000	116,000	116,000
IEER / EER	15.2/11.4	15.2/11.4	15.2/11.4
AHRI Reference #	215440983	215440984	215440985
EVAPORATOR MOTOR / RTPF (ROUND TUBE PLATE FIN)			
Motor Type	Direct Drive	Direct Drive	Direct Drive
External Static Pressure (ESP)	Standard	Standard	Standard
Wheel Dia. X Width	15x15	15x15	15x15
Indoor Nominal CFM	3380	3380	3380
RPM	300-1600	300-1600	300-1600
Indoor Horsepower	2.4	2.4	2.4
Filter Size (in)	20 X 25 X 2 (2) 25 X 25 X 2 (2)	20 X 25 X 2 (2) 25 X 25 X 2 (2)	20 X 25 X 2 (2) 25 X 25 X 2 (2)
Drain Size (NPT)	3/4	3/4	3/4
R-32 Refrigerant Charge (oz.) Cir #1 & 2	73/71	73/71	73/71
Evaporator Coil Face Area (ft^2)	16.2	16.2	16.2
Rows Deep/ Fins per Inch	3 / 16	3 / 16	3 / 16
CONDENSER FAN / MCHX (MICROCHANNEL HEAT EXCHANGER)			
Quantity of Condenser Fan Motors	2	2	2
RPM (High/Low stage)	1122	1050	1050
Outdoor Horsepower	1/3	1/3	1/3
Fan Diameter/ # Fan Blades	22 / 3	22 / 3	22 / 3
Face Area (ft^2)	29.1	29.1	29.1
Rows Deep / Fins per Inch	1 / 23	1 / 23	1 / 23
COMPRESSOR			
Quantity / Type / Stages per Compressor	2/ Scroll / 1	2/ Scroll / 1	2/ Scroll / 1
Compressor RLA / LRA	17.3/155	7.7/58.1	7.1/47.8
ELECTRICAL DATA			
Voltage-Phase-Frequency	208/230-3-60	460-3-60	575-3-60
Indoor Blower FLA	8	5.4	4.0
Max External Static (In. W.C.)	0.8	0.8	0.8
Outdoor Fan FLA	2	0.85	0.67
Min. Circuit Ampacity[1]	50.9/50.9	24.4	21.2
Max. Overcurrent Protection (A)[2]	60/60	30	25
Power Supply Conduit Hole Dia. (in)	1.375	1.375	1.375
Low-Voltage Conduit Hole Dia. (in)	0.5	0.5	0.5
OPERATING WEIGHT (LBS.)			
Operating Weight (lbs)	1070	1070	1070
SHIPPING WEIGHT (LBS.)			
Ship Weight (lbs)	1142	1142	1142

[1] Wire size should be determined in accordance with National Electrical Codes. Extensive wire runs will require larger wire sizes.
[2] May use fuses or HACR-type circuit breakers of the same size as noted.
Note: Always check the S&R plate for electrical data on the unit being installed.

Model	DSC1503D000001S	DSC1504D000001S	DSC1507D000001S
COOLING CAPACITY			
Total BTU/H	140,000	140,000	140,000
IEER / EER	15.2/11.4	15.2/11.4	15.2/11.4
AHRI Reference #	215440986	215440987	215440988
EVAPORATOR MOTOR / RTPF (ROUND TUBE PLATE FIN)			
Motor Type	Direct Drive	Direct Drive	Direct Drive
External Static Pressure (ESP)	Standard	Standard	Standard
Wheel Dia. X Width	15x15	15x15	15x15
Indoor Nominal CFM	4200	4200	4200
RPM	300-1600	300-1600	300-1600
Indoor Horsepower	3.5	3.5	3.5
Filter Size (in)	20 X 25 X 2 (2) 25 X 25 X 2 (2)	20 X 25 X 2 (2) 25 X 25 X 2 (2)	20 X 25 X 2 (2) 25 X 25 X 2 (2)
Drain Size (NPT)	3/4	3/4	3/4
R-32 Refrigerant Charge (oz.) Cir #1 & 2	110/111	110/111	110/111
Evaporator Coil Face Area (ft^2)	16.2	16.2	16.2
Rows Deep/ Fins per Inch	4 / 16	4 / 16	4 / 16
CONDENSER FAN / MCHX (MICROCHANNEL HEAT EXCHANGER)			
Quantity of Condenser Fan Motors	2	2	2
RPM (High/Low stage)	1130	1115	1075
Outdoor Horsepower	1/2	1/2	1/2
Fan Diameter/ # Fan Blades	22 / 3	22 / 3	22 / 3
Face Area (ft^2)	40.8	40.8	40.8
Rows Deep / Fins per Inch	1 / 23	1 / 23	1 / 23
COMPRESSOR			
Quantity / Type / Stages per Compressor	2/ Scroll / 1	2/ Scroll / 1	2/ Scroll / 1
Compressor RLA / LRA	19.2/157	9.0/74.8	7.1/53.9
ELECTRICAL DATA			
Voltage-Phase-Frequency	208/230-3-60	460-3-60	575-3-60
Indoor Blower FLA	10.9	7.2	5.0
Max External Static (In. W.C.)	0.8	0.8	0.8
Outdoor Fan FLA	2.7	1.4	1
Min. Circuit Ampacity[1]	59.5/59.5	30.2	22.8
Max. Overcurrent Protection (A)[2]	70/70	35	25
Power Supply Conduit Hole Dia. (in)	1.375	1.375	1.375
Low-Voltage Conduit Hole Dia. (in)	0.5	0.5	0.5
OPERATING WEIGHT (LBS.)			
Operating Weight (lbs)	1153	1153	1153
SHIPPING WEIGHT (LBS.)			
Ship Weight (lbs)	1225	1225	1225

[1] Wire size should be determined in accordance with National Electrical Codes. Extensive wire runs will require larger wire sizes.
[2] May use fuses or HACR-type circuit breakers of the same size as noted.
Note: Always check the S&R plate for electrical data on the unit being installed.

Model	DSC1503W000001F	DSC1504W000001F	DSC1507W000001F
COOLING CAPACITY			
Total BTU/H	140,000	140,000	140,000
IEER / EER	15.2/11.4	15.2/11.4	15.2/11.4
AHRI Reference #	215440986	215440987	215440988
EVAPORATOR MOTOR / RTPF (ROUND TUBE PLATE FIN)			
Motor Type	Direct Drive	Direct Drive	Direct Drive
External Static Pressure (ESP)	High	High	High
Wheel Dia. X Width	15x15	15x15	15x15
Indoor Nominal CFM	4200	4200	4200
RPM	300-1600	300-1600	300-1600
Indoor Horsepower	5.0	5.0	5.0
Filter Size (in)	20 X 25 X 2 (2) 25 X 25 X 2 (2)	20 X 25 X 2 (2) 25 X 25 X 2 (2)	20 X 25 X 2 (2) 25 X 25 X 2 (2)
Drain Size (NPT)	3/4	3/4	3/4
R-32 Refrigerant Charge (oz.) Cir #1 & 2	110/111	110/111	110/111
Evaporator Coil Face Area (ft^2)	16.2	16.2	16.2
Rows Deep/ Fins per Inch	4/ 16	4/ 16	4/ 16
CONDENSER FAN / MCHX (MICROCHANNEL HEAT EXCHANGER)			
Quantity of Condenser Fan Motors	2	2	2
RPM (High/Low stage)	1130	1115	1075
Outdoor Horsepower	1/2	1/2	1/2
Fan Diameter/ # Fan Blades	22 / 3	22 / 3	22 / 3
Face Area (ft^2)	40.8	40.8	40.8
Rows Deep / Fins per Inch	1 / 23	1 / 23	1 / 23
COMPRESSOR			
Quantity / Type / Stages per Compressor	2/ Scroll / 1	2/ Scroll / 1	2/ Scroll / 1
Compressor RLA / LRA	19.2/157	9.0/74.8	7.1/53.9
ELECTRICAL DATA			
Voltage-Phase-Frequency	208/230-3-60	460-3-60	575-3-60
Indoor Blower FLA	14.5	10.6	7.2
Max External Static (In. W.C.)	1.8	1.8	1.8
Outdoor Fan FLA	2.7	1.4	1
Min. Circuit Ampacity[1]	63.1/63.1	33.6	25
Max. Overcurrent Protection (A)[2]	80/80	40	30
Power Supply Conduit Hole Dia. (in)	1.375	1.375	1.375
Low-Voltage Conduit Hole Dia. (in)	0.5	0.5	0.5
OPERATING WEIGHT (LBS.)			
Operating Weight (lbs)	1153	1153	1153
SHIPPING WEIGHT (LBS.)			
Ship Weight (lbs)	1225	1225	1225

[1] Wire size should be determined in accordance with National Electrical Codes. Extensive wire runs will require larger wire sizes.
[2] May use fuses or HACR-type circuit breakers of the same size as noted.
Note: Always check the S&R plate for electrical data on the unit being installed.

Coil Dimensions

	Indoor			Outdoor		
Tons	Fin height in.	Fin length in.	Area (Ft^2)	Fin height in.	Fin length in.	Area (Ft^2)
7.5	42.0	46.0	13.4	45.6	46.0	29.1
8.5	42.0	46.0	13.4	45.6	45.9	29.1
10	45.0	51.8	16.2	45.6	45.9	29.1
12.5	45.0	51.8	16.2	48.6	60.4	40.8

AHRI Ratings

Model	Cooling Capacity (BTU/hr)	EER	IEER
DSC0903D	90,000	12.0	16
DSC0904D	90,000	12.0	16
DSC0907D	90,000	12.0	16
DSC1023D	97,000	11.4	15.5
DSC1024D	97,000	11.4	15.5
DSC1027D	97,000	11.4	15.5
DSC1203D	116,000	11.4	15.2
DSC1204D	116,000	11.4	15.2
DSC1207D	116,000	11.4	15.2
DSC1503D	140,000	11.4	15.2
DSC1504D	140,000	11.4	15.2
DSC1507D	140,000	11.4	15.2

Sound Data

Static Pressure	7.5 Ton Sound (DB) at 60 Hz										
	Indoor CFM	Componet	A-Weighted	63	125	250	500	1000	2000	4000	8000
0.8	3,000	Discharge	68.7	92.1	76.0	63.9	62.6	62.1	57.2	56.3	46.4
		Inlet	63.8	87.9	72.4	64.4	58.2	52.2	46.9	47.1	46.3
1.4		Discharge	78.3	98.6	87.0	72.2	72.7	72.8	68.5	66.7	60.8
		Inlet	70.2	90.7	80.7	69.6	64.6	61.7	56.6	56.5	53
2.0		Discharge	82.4	97.6	88.4	85	77.1	77.1	72.5	71.7	67.3
		Inlet	74.8	92.6	84.0	78.2	69.9	66.5	61.8	62.1	58.4
N/A	N/A	Outdoor	81.3	-	69.3	72.0	75.2	76.1	74.2	69.3	60.3

Static Pressure	8.5 Ton Sound (DB) at 60 Hz										
	Indoor CFM	Componet	A-Weighted	63	125	250	500	1000	2000	4000	8000
0.8	3,400	Discharge	71.3	93.5	79.9	65.3	66.0	65.1	60.8	58.1	49.9
		Inlet	65.3	87.0	75.8	66.8	59.7	54.6	49.8	49.2	47.0
1.4		Discharge	81.5	99.6	88.8	78.8	76.4	76.6	71.5	70.3	64.9
		Inlet	73.1	91.4	82.8	74.6	67.4	66.2	60.0	60.5	56.7
2.0		Discharge	80.8	99.7	89.4	76.1	75.2	75.5	71.4	69.7	65.3
		Inlet	72.7	92.5	82.6	73.6	66.9	64.3	59.5	59.5	56.0
N/A	N/A	Outdoor	81.3	-	64.7	69.3	76.3	76.4	74.1	70.1	60.6

Static Pressure	10 Ton Sound (DB) at 60 Hz										
	Indoor CFM	Componet	A-Weighted	63	125	250	500	1000	2000	4000	8000
0.8	4,000	Discharge	74.5	92.3	82.2	71.0	70.8	69.0	64.1	65.6	55.6
		Inlet	67.2	88.8	76.6	66.8	62.2	58.5	54.7	52.4	47.4
1.4		Discharge	76.8	95.8	85.3	72.2	71.7	71.2	67.3	65.2	59.8
		Inlet	69.2	89.5	79.3	68.8	63.9	60.6	57.1	55.5	50.5
2.0		Discharge	77.1	96.2	85.3	72.5	72.0	71.5	67.6	65.3	59.9
		Inlet	71.0	91.7	81.2	70.8	65.2	62.0	58.8	57.4	53.1
N/A	N/A	Outdoor	82.7	-	67.4	72.2	76.5	78.4	76.1	70.3	60.1

Static Pressure	12.5 Ton Sound (DB) at 60 Hz										
	Indoor CFM	Componet	A-Weighted	63	125	250	500	1000	2000	4000	8000
0.8	5,000	Discharge	78.5	92.6	82.0	73.2	74.2	74.5	69.4	68.6	63.2
		Inlet	70.1	92.3	78.8	68.7	64.0	62.2	57.7	57.3	52.2
1.4		Discharge	79.5	93.1	84.7	77.1	74.9	75.4	69.9	68.9	63.8
		Inlet	72.0	91.9	52.6	72.5	66.4	63.8	59.5	58.8	53.8
2.0		Discharge	82.4	100.4	90.1	78.2	77.3	77.2	72.9	71.1	66.7
		Inlet	73.4	93.2	84.0	73.1	67.9	65.0	61.4	60.7	56.0
N/A	N/A	Outdoor	85.8	-	71.7	78.5	79.5	80.5	78.3	72.3	64.7

[1] Outdoor sound data is measured in accordance with AHRI standard 230
[2] Discharge and Inlet sound data was measured in accordanced with AHRI standard 260.
[3] Measurements are expressed in terms of sound power. Do not compare these values to sound pressure values because sound pressure depends on specific environment factors which normally do not match individual applications. Sound power values are independent of the environment and therefore more accurate.
[4] A-weighted sound ratings filter out high and very low frequencies, to better approximate the response of "average" human ear. A-weighted measurements for Daikin units are taken in accordance with AHRI standards 230 and 260.

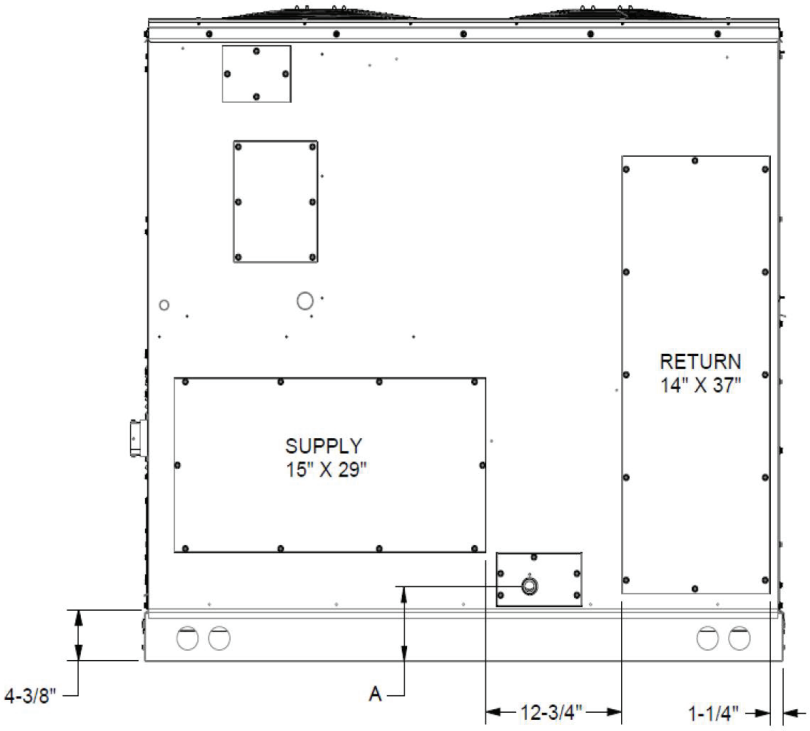

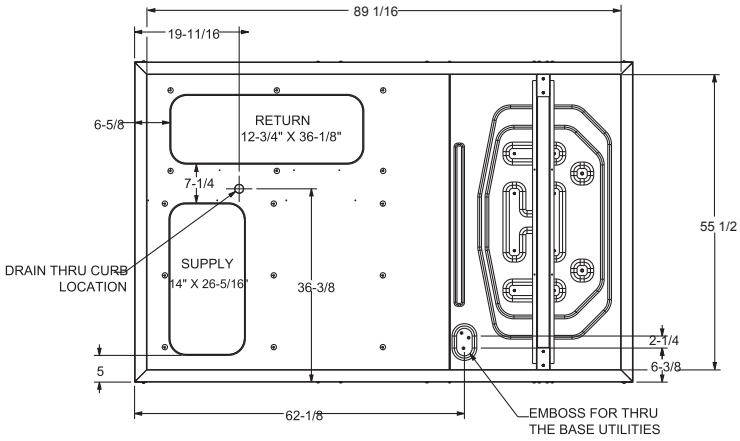

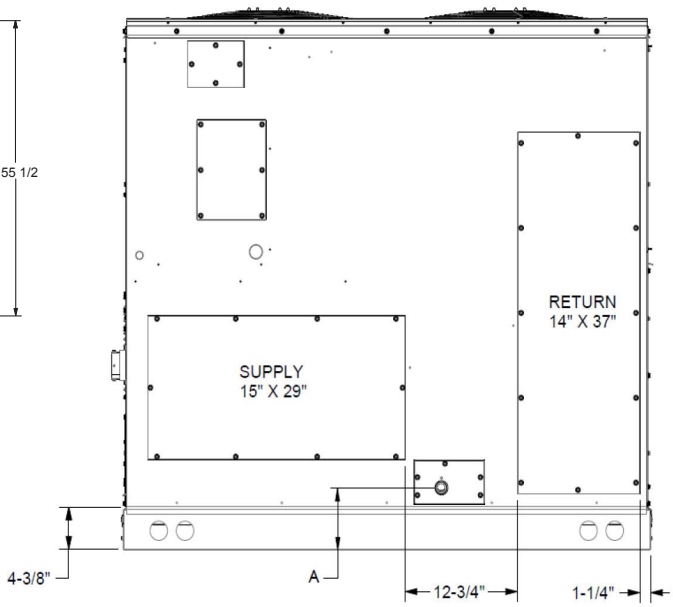

UNIT	DIM "A"
DSC 090	9"
DSC 102	9"
DSC 120	6½"
DSC 150	6½"

Light Commercial Base Rails

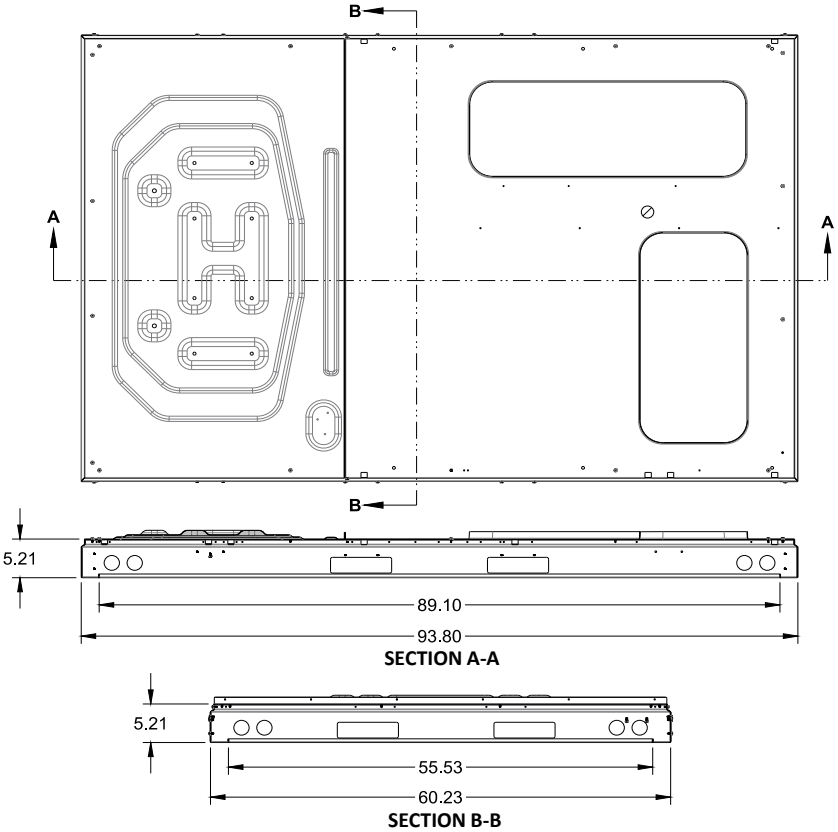

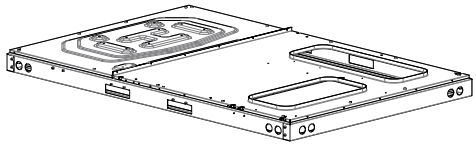

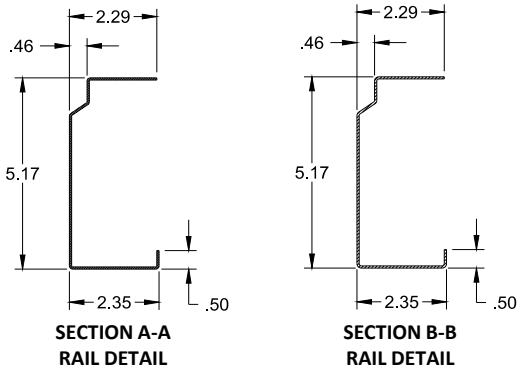

			Outdoor Ambient Temperature																							
			65				75				85				95				105				115			
			Entering Indoor Wet Bulb Temperature																							
IDB	Airflow	ID WB	59	63	67	71	59	63	67	71	59	63	67	71	59	63	67	71	59	63	67	71	59	63	67	71
70	2625	MBh	91.1	92.4	95.2	-	90.3	91.6	94.4	-	87.9	89.2	92.0	-	83.8	85.1	87.8	-	78.8	80.1	82.8	-	74.2	75.5	78.2	-
		S/T	0.60	0.53	0.42	-	0.60	0.54	0.42	-	0.62	0.56	0.44	-	0.64	0.58	0.45	-	0.68	0.60	0.47	-	0.76	0.68	0.54	-
		ΔT	18.78	17.04	13.80	-	18.73	17.00	13.75	-	18.98	17.24	14.00	-	18.72	16.98	13.74	-	18.48	16.75	13.50	-	19.57	17.83	14.59	-
		kW	5.42	5.42	5.40	-	6.06	6.05	6.04	-	6.77	6.77	6.75	-	7.54	7.54	7.53	-	8.40	8.40	8.39	-	9.41	9.41	9.40	-
		Amps	21.25	21.23	21.18	-	24.17	24.15	24.10	-	27.43	27.41	27.36	-	30.96	30.94	30.89	-	34.90	34.88	34.83	-	39.52	39.50	39.45	-
		Hi PR	260	261	263	-	301	302	304	-	344	345	347	-	390	391	393	-	440	441	443	-	493	495	496	-
		Lo PR	133	135	138	-	141	143	146	-	146	150	153	-	154	151	159	-	160	162	160	-	167	169	172	-
	3000	MBh	92.8	94.1	96.8	-	91.9	93.2	96.0	-	89.6	90.9	93.6	-	85.4	86.7	89.5	-	80.4	81.7	84.4	-	75.8	77.1	79.9	-
		S/T	0.63	0.56	0.43	-	0.63	0.56	0.44	-	0.66	0.59	0.46	-	0.68	0.61	0.47	-	0.72	0.63	0.49	-	0.81	0.72	0.56	-
		ΔT	17.73	16.00	12.75	-	17.68	15.95	12.70	-	17.93	16.19	12.95	-	17.67	15.93	12.69	-	17.44	15.70	12.45	-	18.52	16.79	13.54	-
		kW	5.45	5.45	5.44	-	6.09	6.09	6.08	-	6.80	6.80	6.79	-	7.57	7.57	7.56	-	8.44	8.43	8.42	-	9.45	9.44	9.43	-
		Amps	21.40	21.38	21.33	-	24.32	24.30	24.25	-	27.58	27.56	27.51	-	31.11	31.09	31.04	-	35.05	35.03	34.98	-	39.68	39.65	39.60	-
		Hi PR	262	263	265	-	303	304	306	-	346	347	349	-	393	394	395	-	442	444	445	-	496	497	499	-
		Lo PR	135	137	140	-	143	145	148	-	147	152	155	-	156	154	161	-	162	164	163	-	169	171	174	-
	3375	MBh	94.2	95.5	98.2	-	93.4	94.7	97.4	-	91.0	92.3	95.0	-	86.9	88.2	90.9	-	81.9	83.2	85.9	-	77.3	78.6	81.3	-
		S/T	0.66	0.59	0.45	-	0.67	0.59	0.45	-	0.70	0.62	0.47	-	0.72	0.63	0.48	-	0.75	0.66	0.50	-	0.85	0.75	0.58	-
		ΔT	16.85	15.11	11.87	-	16.80	15.06	11.82	-	17.05	15.31	12.07	-	16.78	15.05	11.80	-	16.55	14.81	11.57	-	17.64	15.90	12.66	-
		kW	5.48	5.48	5.47	-	6.12	6.11	6.10	-	6.83	6.83	6.82	-	7.60	7.60	7.59	-	8.46	8.46	8.45	-	9.47	9.47	9.46	-
		Amps	21.53	21.51	21.46	-	24.45	24.43	24.38	-	27.71	27.69	27.64	-	31.24	31.22	31.17	-	35.18	35.16	35.11	-	39.80	39.78	39.73	-
		Hi PR	264	265	267	-	305	307	308	-	348	350	351	-	395	396	398	-	445	446	448	-	498	499	501	-
		Lo PR	137	139	142	-	145	147	150	-	150	154	157	-	149	156	163	-	164	166	165	-	171	173	176	-
75	2625	MBh	91.6	92.9	95.6	99.8	90.8	92.1	94.8	99.0	88.4	89.7	92.4	96.6	84.3	85.6	88.3	92.5	79.3	80.6	83.3	87.5	74.7	76.0	78.7	82.9
		S/T	0.71	0.65	0.53	0.4	0.72	0.65	0.54	0.4	0.74	0.68	0.56	0.4	0.77	0.70	0.57	0.4	0.81	0.74	0.60	0.5	0.90	0.82	0.68	0.5
		ΔT	22.60	20.86	17.62	14.3	22.55	20.82	17.57	14.2	22.80	21.06	17.82	14.5	22.54	20.80	17.56	14.2	22.30	20.57	17.32	14.0	23.39	21.65	18.41	15.1
		kW	5.42	5.41	5.40	5.4	6.05	6.05	6.04	6.1	6.77	6.76	6.75	6.8	7.54	7.53	7.52	7.6	8.40	8.39	8.38	8.4	9.41	9.40	9.39	9.4
		Amps	21.23	21.21	21.16	21.4	24.15	24.13	24.08	24.3	27.41	27.39	27.34	27.6	30.94	30.92	30.87	31.1	34.88	34.86	34.81	35.0	39.51	39.48	39.43	39.7
		Hi PR	260	261	263	267.7	301	302	304	308.8	344	345	347	351.7	391	392	393	398.0	440	442	443	447.9	494	495	497	501.2
		Lo PR	133	135	138	143.7	140	143	146	151.7	139	150	153	158.8	139	154	159	164.8	160	162	164	170.7	167	169	172	170.3
	3000	MBh	92.8	94.1	96.8	101.0	92.0	93.3	96.0	100.2	89.6	90.9	93.6	97.8	85.5	86.8	89.5	93.7	80.5	81.8	84.5	88.7	75.9	77.2	79.9	84.1
		S/T	0.77	0.69	0.56	0.4	0.77	0.70	0.57	0.4	0.80	0.73	0.59	0.5	0.83	0.75	0.61	0.5	0.87	0.79	0.64	0.5	0.97	0.88	0.72	0.5
		ΔT	21.55	19.81	16.57	13.2	21.50	19.77	16.52	13.2	21.75	20.01	16.77	13.4	21.49	19.75	16.51	13.1	21.25	19.52	16.27	12.9	22.34	20.60	17.36	14.0
		kW	5.45	5.44	5.43	5.5	6.09	6.08	6.07	6.1	6.80	6.79	6.78	6.8	7.57	7.57	7.55	7.6	8.43	8.43	8.42	8.5	9.44	9.44	9.43	9.5
		Amps	21.39	21.36	21.31	21.5	24.31	24.28	24.23	24.5	27.57	27.54	27.49	27.7	31.09	31.07	31.02	31.2	35.03	35.01	34.96	35.2	39.66	39.63	39.58	39.8
		Hi PR	262	264	265	269.9	303	305	306	311.0	346	348	349	353.9	393	394	396	400.2	443	444	446	450.1	496	497	499	503.4
		Lo PR	135	137	140	145.6	139	145	148	153.7	140	152	155	160.8	139	156	161	166.8	162	157	167	172.7	169	171	174	173.5
	3375	MBh	94.3	95.6	98.3	102.5	93.4	94.7	97.5	101.7	91.1	92.3	95.1	99.3	86.9	88.2	91.0	95.1	81.9	83.2	85.9	90.1	77.3	78.6	81.4	85.5
		S/T	0.81	0.74	0.59	0.4	0.82	0.74	0.60	0.4	0.85	0.77	0.62	0.5	0.88	0.79	0.64	0.5	0.92	0.83	0.66	0.5	1.00	0.93	0.75	0.6
		ΔT	20.67	18.93	15.69	12.3	20.62	18.88	15.64	12.3	20.86	19.13	15.88	12.5	20.60	18.87	15.62	12.3	20.37	18.63	15.39	12.0	20.83	19.72	16.48	13.1
		kW	5.48	5.47	5.46	5.5	6.11	6.11	6.10	6.1	6.83	6.82	6.81	6.9	7.60	7.59	7.58	7.6	8.46	8.45	8.44	8.5	9.47	9.46	9.45	9.5
		Amps	21.51	21.49	21.44	21.7	24.43	24.41	24.36	24.6	27.69	27.67	27.62	27.8	31.22	31.20	31.15	31.4	35.16	35.14	35.09	35.3	39.78	39.76	39.71	39.9
		Hi PR	265	266	268	272.1	306	307	309	313.1	349	350	352	356.1	395	396	398	402.4	445	446	448	452.3	498	499	501	505.5
		Lo PR	137	139	142	147.8	139	147	150	155.9	139	154	157	163.0	139	159	163	168.9	164	159	169	174.8	171	173	177	175.7

IDB: Entering Indoor Dry Bulb Temperature Shaded area reflects ACCA (TVA) conditions **kW = Total system power**

High and low pressures are measured at the liquid and suction access fittings. **Amps: Unit amps (comp.+ evaporator + condenser fan motors)**

Design Subcooling, 16 - 19 °F @ the liquid access fitting connection ARI 95 test conditions. Design Superheat 8 - 12°F @ the compressor suction access fitting connection.

			Outdoor Ambient Temperature																							
			65				75				85				95				105				115			
			Entering Indoor Wet Bulb Temperature																							
IDB	Airflow	ID WB	59	63	67	71	59	63	67	71	59	63	67	71	59	63	67	71	59	63	67	71	59	63	67	71
80	2625	MBh	92.1	93.4	96.1	100.3	91.3	92.6	95.3	99.5	88.9	90.2	92.9	97.1	84.8	86.1	240.0	93.0	79.7	81.0	83.8	87.9	75.2	76.4	79.2	83.4
		S/T	0.83	0.76	0.64	0.5	0.84	0.77	0.65	0.5	0.87	0.80	0.67	0.5	0.90	0.83	0.26	0.6	0.95	0.87	0.73	0.6	1.00	0.96	0.81	0.7
		ΔT	26.45	24.71	21.47	18.1	26.40	24.66	21.42	18.1	26.64	24.91	21.66	18.3	26.38	24.64	21.40	18.0	26.15	24.41	21.17	17.8	26.03	25.50	22.26	18.9
		kW	5.42	5.41	5.40	5.5	6.06	6.05	6.04	6.1	6.77	6.76	6.75	6.8	7.54	7.54	7.52	7.6	8.40	8.40	8.39	8.4	9.41	9.41	9.40	9.4
		Amps	21.25	21.23	21.18	21.4	24.17	24.15	24.10	24.3	27.43	27.41	27.36	27.6	30.96	30.93	30.88	31.1	34.90	34.87	34.82	35.0	39.52	39.50	39.45	39.7
		Hi PR	261	262	264	268.2	302	303	305	309.2	345	346	348	352.2	391	392	394	398.5	441	442	444	448.4	494	495	497	501.7
		Lo PR	127	135	139	144.2	127	143	147	152.3	128	150	154	159.4	155	152	160	165.4	161	152	166	171.3	168	170	173	173.4
	3000	MBh	93.3	94.6	97.3	101.5	92.5	93.8	96.5	100.7	90.1	91.4	94.1	98.3	86.0	87.3	**90.0**	94.2	80.9	82.2	85.0	89.2	76.4	77.6	80.4	84.6
		S/T	0.90	0.83	0.69	0.6	0.90	0.83	0.70	0.6	0.94	0.86	0.72	0.6	0.97	0.89	**0.75**	0.6	1.00	0.94	0.78	0.6	1.00	1.00	0.87	0.7
		ΔT	25.40	23.66	20.42	17.1	25.35	23.61	20.37	17.0	25.59	23.86	20.61	17.3	25.33	23.59	**20.35**	17.0	24.53	23.36	20.12	16.8	23.14	23.53	21.21	17.8
		kW	5.45	5.45	5.44	5.5	6.09	6.09	6.07	6.1	6.80	6.80	6.79	6.8	7.57	7.57	**7.56**	7.6	8.43	8.43	8.42	8.5	9.44	9.44	9.43	9.5
		Amps	21.40	21.38	21.33	21.6	24.32	24.30	24.25	24.5	27.58	27.56	27.51	27.7	31.11	31.09	**31.04**	31.3	35.05	35.03	34.98	35.2	39.67	39.65	39.60	39.8
		Hi PR	263	264	266	270.4	304	305	307	311.4	347	348	350	354.4	393	394	**396**	400.7	443	444	446	450.6	496	498	499	503.9
		Lo PR	128	137	141	146.2	128	145	149	154.3	151	152	156	161.4	157	152	**162**	167.4	163	152	168	173.2	170	161	175	176.7
	3375	MBh	94.7	96.0	98.8	102.9	93.9	95.2	97.9	102.1	91.5	92.8	95.6	99.7	87.4	88.7	91.4	95.6	82.4	83.7	86.4	90.6	77.8	79.1	81.8	86.0
		S/T	0.96	0.88	0.73	0.6	0.97	0.89	0.74	0.6	1.00	0.92	0.77	0.6	1.00	0.95	0.79	0.6	1.00	1.00	0.83	0.7	1.00	1.00	0.92	0.7
		ΔT	24.51	22.78	19.53	16.2	24.47	22.73	19.49	16.1	24.65	22.97	19.73	16.4	23.55	22.71	19.47	16.1	22.19	22.48	19.24	15.9	20.96	21.30	20.32	17.0
		kW	5.48	5.48	5.46	5.5	6.12	6.11	6.10	6.2	6.83	6.83	6.81	6.9	7.60	7.60	7.59	7.6	8.46	8.46	8.45	8.5	9.47	9.47	9.46	9.5
		Amps	21.53	21.51	21.46	21.7	24.45	24.43	24.38	24.6	27.71	27.68	27.63	27.9	31.23	31.21	31.16	31.4	35.18	35.15	35.10	35.3	39.80	39.78	39.73	40.0
		Hi PR	265	266	268	272.6	306	307	309	313.6	349	350	352	356.6	395	396	398	402.9	445	446	448	452.8	499	500	501	506.0
		Lo PR	127	139	143	148.4	128	147	151	156.5	153	152	158	163.5	159	153	164	169.5	164	152	170	175.4	168	167	169	180.2
85	2625	MBh	93.6	94.9	97.7	101.8	92.8	94.1	96.8	101.0	90.4	91.7	94.5	98.6	86.3	87.6	90.3	94.5	81.3	82.6	85.3	89.5	76.7	78.0	80.7	84.9
		S/T	0.92	0.86	0.74	0.6	0.93	0.86	0.74	0.6	0.96	0.89	0.77	0.6	1.00	0.92	0.79	0.7	1.00	0.97	0.83	0.7	1.00	1.00	0.92	0.8
		ΔT	29.86	28.12	24.88	21.5	29.81	28.07	24.83	21.5	30.05	28.32	25.07	21.7	29.79	28.05	24.81	21.5	28.15	27.82	24.58	21.2	26.56	27.01	25.67	22.3
		kW	5.43	5.43	5.42	5.5	6.07	6.06	6.05	6.1	6.78	6.78	6.77	6.8	7.55	7.55	7.54	7.6	8.41	8.41	8.40	8.4	9.42	9.42	9.41	9.5
		Amps	21.31	21.28	21.23	21.5	24.23	24.20	24.15	24.4	27.49	27.46	27.41	27.6	31.01	30.99	30.94	31.2	34.95	34.93	34.88	35.1	39.58	39.55	39.50	39.7
		Hi PR	262	263	265	269.4	303	304	306	310.5	346	347	349	353.4	392	393	395	399.7	442	443	445	449.6	495	497	498	502.9
		Lo PR	136	137	141	146.2	144	141	149	154.3	151	142	156	161.4	115	141	162	167.4	161	142	165	173.3	166	172	175	178.0
	3000	MBh	94.8	96.1	98.9	103.0	94.0	95.3	98.0	102.2	91.6	92.9	95.7	99.8	87.5	88.8	91.5	95.7	82.5	83.8	86.5	90.7	77.9	79.2	81.9	86.1
		S/T	1.00	0.93	0.80	0.7	1.00	0.94	0.80	0.7	1.00	0.97	0.83	0.7	1.00	1.00	0.86	0.7	1.00	1.00	0.90	0.7	1.00	1.00	0.99	0.8
		ΔT	28.74	27.07	23.83	20.5	28.49	27.02	23.78	20.4	27.77	27.27	24.02	20.7	26.52	26.91	23.76	20.4	25.00	25.39	23.53	20.2	23.61	24.00	24.62	21.3
		kW	5.46	5.46	5.45	5.5	6.10	6.10	6.09	6.1	6.81	6.81	6.80	6.8	7.59	7.58	7.57	7.6	8.45	8.44	8.43	8.5	9.46	9.45	9.44	9.5
		Amps	21.46	21.43	21.38	21.6	24.38	24.35	24.30	24.5	27.64	27.61	27.56	27.8	31.16	31.14	31.09	31.3	35.10	35.08	35.03	35.3	39.73	39.71	39.66	39.9
		Hi PR	264	265	267	271.6	305	306	308	312.7	348	349	351	355.7	394	396	397	401.9	444	445	447	451.8	498	499	501	505.1
		Lo PR	139	139	143	148.2	146	142	151	156.3	153	141	158	163.4	159	160	164	169.4	165	166	166	175.2	172	174	165	181.3
	3375	MBh	96.3	97.6	100.3	104.5	95.5	96.8	99.5	103.7	93.1	94.4	97.1	101.3	89.0	90.3	93.0	97.2	83.9	85.2	88.0	92.1	79.3	80.6	83.4	87.5
		S/T	1.00	1.00	0.85	0.7	1.00	1.00	0.85	0.7	1.00	1.00	0.88	0.7	1.00	1.00	0.91	0.7	1.00	1.00	0.96	0.8	1.00	1.00	1.00	0.9
		ΔT	25.93	26.19	22.94	19.6	25.71	26.06	22.90	19.5	25.07	25.42	23.14	19.8	23.96	24.31	22.88	19.5	22.61	22.96	22.65	19.3	21.37	21.72	22.46	20.4
		kW	5.49	5.49	5.48	5.5	6.13	6.13	6.11	6.2	6.84	6.84	6.83	6.9	7.61	7.61	7.60	7.6	8.47	8.47	8.46	8.5	9.48	9.48	9.47	9.5
		Amps	21.58	21.56	21.51	21.7	24.50	24.48	24.43	24.7	27.76	27.74	27.69	27.9	31.29	31.27	31.22	31.4	35.23	35.21	35.16	35.4	39.86	39.83	39.78	40.0
		Hi PR	266	267	269	273.8	307	308	310	314.8	350	351	353	357.8	397	398	400	404.1	446	448	449	454.0	500	501	503	507.2
		Lo PR	140	140	145	150.4	148	149	153	158.4	155	156	160	165.5	161	162	166	171.5	167	168	165	177.4	174	176	178	184.8

IDB: Entering Indoor Dry Bulb Temperature Shaded area reflects ACCA (TVA) conditions **kW = Total system power**

High and low pressures are measured at the liquid and suction access fittings. **Amps: Unit amps (comp.+ evaporator + condenser fan motors)**

Design Subcooling, 16 - 19 °F @ the liquid access fitting connection ARI 95 test conditions. Design Superheat 8 - 12°F @ the compressor suction access fitting connection.

			Outdoor Ambient Temperature																							
			65				75				85				95				105				115			
			Entering Indoor Wet Bulb Temperature																							
IDB	Airflow	ID WB	59	63	67	71	59	63	67	71	59	63	67	71	59	63	67	71	59	63	67	71	59	63	67	71
70	2975	MBh	98.8	100.2	103.1	-	97.9	99.3	102.2	-	95.3	96.7	99.7	-	90.9	92.3	95.2	-	85.5	86.9	89.8	-	80.5	81.9	84.9	-
		S/T	0.61	0.54	0.42	-	0.61	0.54	0.42	-	0.63	0.57	0.44	-	0.66	0.58	0.46	-	0.69	0.61	0.47	-	0.78	0.69	0.54	-
		ΔT	18.30	16.56	13.32	-	18.25	16.51	13.27	-	18.49	16.76	13.51	-	18.23	16.49	13.25	-	18.00	16.26	13.02	-	19.09	17.35	14.11	-
		kW	6.27	6.26	6.25	-	6.96	6.96	6.94	-	7.73	7.73	7.72	-	8.57	8.56	8.55	-	9.50	9.50	9.49	-	10.60	10.60	10.58	-
		Amps	24.38	24.36	24.30	-	27.55	27.53	27.47	-	31.09	31.06	31.01	-	34.92	34.89	34.84	-	39.19	39.17	39.11	-	44.21	44.19	44.13	-
		Hi PR	266	267	269	-	308	309	311	-	351	353	355	-	399	400	402	-	449	451	453	-	504	505	507	-
		Lo PR	130	131	134	-	137	139	142	-	144	146	149	-	150	152	155	-	156	157	161	-	163	164	168	-
	3200	MBh	100.0	101.4	104.3	-	99.1	100.5	103.4	-	96.5	97.9	100.9	-	92.1	93.5	96.4	-	86.7	88.1	91.0	-	81.7	83.1	86.1	-
		S/T	0.62	0.56	0.43	-	0.63	0.56	0.43	-	0.65	0.58	0.45	-	0.68	0.60	0.46	-	0.71	0.63	0.48	-	0.80	0.71	0.55	-
		ΔT	17.73	16.00	12.75	-	17.68	15.95	12.70	-	17.93	16.19	12.95	-	17.67	15.93	12.69	-	17.44	15.70	12.45	-	18.52	16.79	13.54	-
		kW	6.29	6.28	6.27	-	6.98	6.97	6.96	-	7.75	7.75	7.74	-	8.59	8.58	8.57	-	9.52	9.52	9.51	-	10.62	10.61	10.60	-
		Amps	24.47	24.45	24.39	-	27.64	27.62	27.56	-	31.18	31.15	31.10	-	35.00	34.98	34.93	-	39.28	39.26	39.20	-	44.30	44.27	44.22	-
		Hi PR	267	268	270	-	309	310	312	-	353	354	356	-	400	401	403	-	451	452	454	-	505	506	508	-
		Lo PR	131	132	136	-	138	140	143	-	145	147	150	-	151	153	156	-	157	158	162	-	164	166	169	-
	3825	MBh	102.6	103.9	106.9	-	101.7	103.1	106.0	-	99.1	100.5	103.4	-	94.7	96.0	99.0	-	89.2	90.6	93.6	-	84.3	85.7	88.6	-
		S/T	0.67	0.59	0.45	-	0.68	0.60	0.45	-	0.70	0.62	0.47	-	0.73	0.64	0.48	-	0.76	0.67	0.50	-	0.86	0.76	0.58	-
		ΔT	16.40	14.66	11.42	-	16.35	14.61	11.37	-	16.60	14.86	11.62	-	16.33	14.60	11.35	-	16.10	14.36	11.12	-	17.19	15.45	12.21	-
		kW	6.33	6.33	6.32	-	7.03	7.02	7.01	-	7.80	7.79	7.78	-	8.63	8.63	8.62	-	9.57	9.56	9.55	-	10.67	10.66	10.65	-
		Amps	24.68	24.65	24.60	-	27.85	27.82	27.77	-	31.38	31.36	31.31	-	35.21	35.19	35.13	-	39.49	39.46	39.41	-	44.51	44.48	44.43	-
		Hi PR	271	272	274	-	312	314	315	-	356	357	359	-	403	404	406	-	454	455	457	-	508	510	511	-
		Lo PR	134	136	139	-	142	143	147	-	149	150	154	-	149	156	159	-	160	162	165	-	167	169	172	-
75	2975	MBh	99.3	100.7	103.6	108.1	98.4	99.8	102.7	107.2	95.8	97.2	100.2	104.7	91.4	92.8	95.7	100.2	86.0	87.4	90.3	94.8	81.0	82.4	85.4	89.9
		S/T	0.73	0.66	0.54	0.4	0.73	0.67	0.54	0.4	0.76	0.69	0.57	0.4	0.79	0.72	0.58	0.4	0.83	0.75	0.61	0.5	0.93	0.84	0.69	0.5
		ΔT	22.12	20.38	17.14	13.8	22.07	20.33	17.09	13.7	22.31	20.58	17.33	14.0	22.05	20.31	17.07	13.7	21.82	20.08	16.84	13.5	22.91	21.17	17.93	14.6
		kW	6.26	6.26	6.25	6.3	6.96	6.95	6.94	7.0	7.73	7.72	7.71	7.8	8.57	8.56	8.55	8.6	9.50	9.49	9.48	9.5	10.60	10.59	10.58	10.6
		Amps	24.36	24.34	24.28	24.5	27.53	27.51	27.45	27.7	31.07	31.04	30.99	31.2	34.90	34.87	34.82	35.1	39.17	39.15	39.09	39.3	44.19	44.17	44.11	44.4
		Hi PR	266	267	269	273.8	308	309	311	315.6	352	353	355	359.4	399	400	402	406.5	450	451	453	457.4	504	505	507	511.6
		Lo PR	130	131	134	140.0	137	139	142	147.8	139	146	149	154.7	140	152	155	160.5	156	157	161	166.1	163	165	168	172.0
	3200	MBh	100.0	101.4	104.4	108.9	99.2	100.6	103.5	108.0	96.6	98.0	100.9	105.4	92.1	93.5	96.5	101.0	86.7	88.1	91.1	95.6	81.8	83.2	86.1	90.6
		S/T	0.76	0.69	0.56	0.4	0.76	0.69	0.56	0.4	0.79	0.72	0.58	0.4	0.82	0.74	0.60	0.5	0.86	0.78	0.63	0.5	0.96	0.87	0.71	0.5
		ΔT	21.55	19.81	16.57	13.2	21.50	19.77	16.52	13.2	21.75	20.01	16.77	13.4	21.49	19.75	16.51	13.1	21.25	19.52	16.27	12.9	22.34	20.60	17.36	14.0
		kW	6.28	6.28	6.27	6.3	6.98	6.97	6.96	7.0	7.75	7.74	7.73	7.8	8.58	8.58	8.57	8.6	9.52	9.51	9.50	9.6	10.62	10.61	10.60	10.7
		Amps	24.45	24.43	24.37	24.6	27.62	27.59	27.54	27.8	31.16	31.13	31.08	31.3	34.98	34.96	34.91	35.1	39.26	39.24	39.18	39.4	44.28	44.25	44.20	44.4
		Hi PR	267	269	270	275.0	309	310	312	316.8	353	354	356	360.6	400	401	403	407.8	451	452	454	458.6	505	506	508	512.9
		Lo PR	131	132	136	141.0	139	140	143	148.9	139	147	150	155.7	139	153	156	161.5	157	157	162	167.2	164	166	169	173.1
	3825	MBh	102.6	104.0	106.9	111.5	101.7	103.1	106.1	110.6	99.1	100.5	103.5	108.0	94.7	96.1	99.1	103.6	89.3	90.7	93.6	98.1	84.3	85.7	88.7	93.2
		S/T	0.83	0.75	0.60	0.4	0.83	0.75	0.60	0.5	0.87	0.78	0.63	0.5	0.90	0.81	0.64	0.5	0.94	0.84	0.67	0.5	1.00	0.95	0.76	0.6
		ΔT	20.22	18.48	15.24	11.9	20.17	18.43	15.19	11.8	20.41	18.68	15.43	12.1	20.15	18.42	15.17	11.8	19.92	18.18	14.94	11.6	20.05	19.27	16.03	12.7
		kW	6.33	6.32	6.31	6.4	7.02	7.02	7.00	7.1	7.79	7.79	7.78	7.8	8.63	8.62	8.61	8.7	9.56	9.56	9.55	9.6	10.66	10.66	10.64	10.7
		Amps	24.66	24.63	24.58	24.8	27.83	27.80	27.75	28.0	31.36	31.34	31.29	31.5	35.19	35.17	35.11	35.4	39.47	39.44	39.39	39.6	44.49	44.46	44.41	44.6
		Hi PR	271	272	274	278.4	313	314	316	320.2	356	358	359	364.0	404	405	407	411.2	454	456	457	462.0	509	510	512	516.3
		Lo PR	134	136	139	144.4	139	144	147	152.3	140	150	154	159.1	139	156	159	164.9	160	161	165	170.6	167	169	172	177.8

IDB: Entering Indoor Dry Bulb Temperature Shaded area reflects ACCA (TVA) conditions **kW = Total system power**

High and low pressures are measured at the liquid and suction access fittings. **Amps: Unit amps (comp.+ evaporator + condenser fan motors)**

Design Subcooling, 16 - 19 °F @ the liquid access fitting connection ARI 95 test conditions. Design Superheat 8 - 12°F @ the compressor suction access fitting connection.

			Outdoor Ambient Temperature																							
			65				75				85				95				105				115			
			Entering Indoor Wet Bulb Temperature																							
IDB	Airflow	ID WB	59	63	67	71	59	63	67	71	59	63	67	71	59	63	67	71	59	63	67	71	59	63	67	71
80	2975	MBh	99.8	101.2	104.1	108.6	98.9	100.3	103.3	107.8	96.3	97.7	100.7	105.2	91.9	93.3	240.0	100.7	86.5	87.9	90.8	95.3	81.5	82.9	85.9	90.4
		S/T	0.85	0.78	0.66	0.5	0.86	0.79	0.66	0.5	0.89	0.82	0.69	0.6	0.92	0.85	0.29	0.6	0.97	0.89	0.75	0.6	1.00	0.99	0.83	0.7
		ΔT	25.96	24.22	20.98	17.6	25.91	24.18	20.93	17.6	26.16	24.42	21.18	17.8	25.90	24.16	20.92	17.6	25.66	23.93	20.68	17.3	24.92	25.01	21.77	18.4
		kW	6.27	6.26	6.25	6.3	6.96	6.95	6.94	7.0	7.73	7.73	7.72	7.8	8.57	8.56	8.55	8.6	9.50	9.50	9.49	9.5	10.60	10.59	10.58	10.6
		Amps	24.38	24.35	24.30	24.5	27.55	27.52	27.47	27.7	31.09	31.06	31.01	31.2	34.91	34.89	34.83	35.1	39.19	39.16	39.11	39.4	44.21	44.18	44.13	44.4
		Hi PR	267	268	270	274.3	308	310	311	316.1	352	353	355	359.8	399	401	402	407.0	450	451	453	457.8	504	506	507	512.1
		Lo PR	128	132	135	140.5	128	140	143	148.4	128	146	150	155.2	151	152	156	161.0	156	151	161	166.7	163	165	168	173.8
	3200	MBh	100.6	101.9	104.9	109.4	99.7	101.1	104.0	108.5	97.1	98.5	101.4	105.9	92.7	94.1	**97.0**	101.5	87.2	88.6	91.6	96.1	82.3	83.7	86.6	91.1
		S/T	0.89	0.82	0.69	0.5	0.90	0.82	0.69	0.6	0.93	0.85	0.72	0.6	0.96	0.88	**0.74**	0.6	1.00	0.93	0.77	0.6	1.00	1.00	0.86	0.7
		ΔT	25.40	23.66	20.42	17.1	25.35	23.61	20.37	17.0	25.59	23.86	20.61	17.3	25.33	23.59	**20.35**	17.0	24.78	23.36	20.12	16.8	23.38	23.77	21.21	17.8
		kW	6.29	6.28	6.27	6.3	6.98	6.97	6.96	7.0	7.75	7.75	7.73	7.8	8.59	8.58	**8.57**	8.6	9.52	9.52	9.51	9.6	10.62	10.61	10.60	10.7
		Amps	24.47	24.44	24.39	24.6	27.64	27.61	27.56	27.8	31.17	31.15	31.09	31.3	35.00	34.98	**34.92**	35.2	39.28	39.25	39.20	39.4	44.30	44.27	44.22	44.5
		Hi PR	268	269	271	275.5	310	311	313	317.3	353	355	356	361.1	401	402	**404**	408.2	451	453	454	459.1	506	507	509	513.3
		Lo PR	127	133	136	141.6	127	141	144	149.4	146	148	151	156.3	152	152	**157**	162.1	157	153	162	167.8	165	160	169	174.9
	3825	MBh	103.1	104.5	107.5	112.0	102.2	103.6	106.6	111.1	99.7	101.1	104.0	108.5	95.2	96.6	99.6	104.1	89.8	91.2	94.1	98.7	84.9	86.3	89.2	93.7
		S/T	0.98	0.90	0.75	0.6	0.99	0.90	0.75	0.6	1.00	0.94	0.78	0.6	1.00	0.97	0.80	0.6	1.00	1.00	0.84	0.7	1.00	1.00	0.94	0.7
		ΔT	24.06	22.33	19.08	15.7	24.02	22.28	19.04	15.7	23.69	22.52	19.28	15.9	22.63	22.26	19.02	15.7	21.34	21.68	18.79	15.4	20.17	20.50	19.87	16.5
		kW	6.33	6.33	6.32	6.4	7.02	7.02	7.01	7.1	7.80	7.79	7.78	7.8	8.63	8.63	8.62	8.7	9.57	9.56	9.55	9.6	10.66	10.66	10.65	10.7
		Amps	24.68	24.65	24.60	24.8	27.84	27.82	27.76	28.0	31.38	31.36	31.30	31.5	35.21	35.18	35.13	35.4	39.49	39.46	39.41	39.6	44.50	44.48	44.42	44.7
		Hi PR	271	272	274	278.9	313	314	316	320.7	357	358	360	364.5	404	405	407	411.7	455	456	458	462.5	509	510	512	516.8
		Lo PR	128	136	140	145.0	128	144	147	152.8	149	151	154	159.7	155	152	160	165.5	161	162	166	171.2	168	170	170	178.3
85	2975	MBh	101.5	102.9	105.8	110.3	100.6	102.0	104.9	109.4	98.0	99.4	102.3	106.8	93.6	95.0	97.9	102.4	88.1	89.5	92.5	97.0	83.2	84.6	87.5	92.0
		S/T	0.95	0.88	0.75	0.6	0.95	0.89	0.76	0.6	0.99	0.92	0.79	0.7	1.00	0.95	0.81	0.7	1.00	1.00	0.85	0.7	1.00	1.00	0.94	0.8
		ΔT	29.37	27.63	24.39	21.0	29.32	27.59	24.34	21.0	29.57	27.83	24.59	21.2	28.59	27.57	24.33	21.0	26.93	27.34	24.09	20.7	25.42	25.85	25.18	21.8
		kW	6.28	6.28	6.26	6.3	6.97	6.97	6.96	7.0	7.75	7.74	7.73	7.8	8.58	8.58	8.57	8.6	9.52	9.51	9.50	9.6	10.61	10.61	10.60	10.6
		Amps	24.44	24.41	24.36	24.6	27.61	27.58	27.53	27.8	31.15	31.12	31.07	31.3	34.97	34.95	34.89	35.1	39.25	39.23	39.17	39.4	44.27	44.24	44.19	44.4
		Hi PR	268	269	271	275.5	310	311	313	317.3	353	355	356	361.1	401	402	404	408.2	451	453	454	459.1	506	507	509	513.3
		Lo PR	132	134	137	142.5	140	142	145	150.3	147	142	152	157.2	153	141	157	163.0	158	142	163	168.6	165	167	170	175.8
	3200	MBh	102.2	103.6	106.6	111.1	101.3	102.7	105.7	110.2	98.8	100.1	103.1	107.6	94.3	95.7	98.7	103.2	88.9	90.3	93.2	97.7	84.0	85.3	88.3	92.8
		S/T	0.99	0.92	0.79	0.6	1.00	0.93	0.79	0.7	1.00	0.96	0.82	0.7	1.00	0.99	0.85	0.7	1.00	1.00	0.89	0.7	1.00	1.00	0.98	0.8
		ΔT	28.81	27.07	23.83	20.5	28.76	27.02	23.78	20.4	28.06	27.27	24.02	20.7	26.80	27.00	23.76	20.4	25.26	25.65	23.53	20.2	23.85	24.25	24.62	21.3
		kW	6.30	6.29	6.28	6.3	6.99	6.99	6.98	7.0	7.77	7.76	7.75	7.8	8.60	8.60	8.58	8.6	9.54	9.53	9.52	9.6	10.63	10.63	10.62	10.7
		Amps	24.53	24.50	24.45	24.7	27.70	27.67	27.62	27.9	31.23	31.21	31.15	31.4	35.06	35.04	34.98	35.2	39.34	39.31	39.26	39.5	44.36	44.33	44.28	44.5
		Hi PR	269	270	272	276.7	311	312	314	318.5	355	356	358	362.3	402	403	405	409.5	453	454	456	460.3	507	508	510	514.6
		Lo PR	133	135	138	143.5	115	141	146	151.4	148	142	153	158.2	154	142	159	164.0	159	161	164	169.7	167	168	166	176.9
	3825	MBh	104.8	106.2	109.1	113.6	103.9	105.3	108.2	112.7	101.3	102.7	105.7	110.2	96.9	98.3	101.2	105.7	91.5	92.9	95.8	100.3	86.5	87.9	90.9	95.4
		S/T	1.00	1.00	0.87	0.7	1.00	1.00	0.87	0.7	1.00	1.00	0.90	0.7	1.00	1.00	0.93	0.8	1.00	1.00	0.97	0.8	1.00	1.00	1.00	0.9
		ΔT	24.90	25.23	22.49	19.1	24.69	25.02	22.45	19.1	24.08	24.41	22.69	19.3	23.03	23.36	22.43	19.1	21.74	22.07	22.20	18.8	20.56	20.90	21.60	19.9
		kW	6.35	6.34	6.33	6.4	7.04	7.03	7.02	7.1	7.81	7.81	7.79	7.8	8.65	8.64	8.63	8.7	9.58	9.58	9.56	9.6	10.68	10.67	10.66	10.7
		Amps	24.74	24.71	24.66	24.9	27.90	27.88	27.83	28.1	31.44	31.42	31.36	31.6	35.27	35.24	35.19	35.4	39.55	39.52	39.47	39.7	44.56	44.54	44.48	44.7
		Hi PR	273	274	276	280.2	314	315	317	322.0	358	359	361	365.8	405	406	408	412.9	456	457	459	463.8	510	512	513	518.0
		Lo PR	137	138	141	146.9	144	146	149	154.8	151	153	156	161.6	157	159	162	167.4	163	164	165	173.1	170	171	176	180.3

IDB: Entering Indoor Dry Bulb Temperature Shaded area reflects ACCA (TVA) conditions **kW = Total system power**

High and low pressures are measured at the liquid and suction access fittings. **Amps: Unit amps (comp.+ evaporator + condenser fan motors)**

Design Subcooling, 16 - 19 °F @ the liquid access fitting connection ARI 95 test conditions. Design Superheat 8 - 12°F @ the compressor suction access fitting connection.

			Outdoor Ambient Temperature																							
			65				75				85				95				105				115			
			Entering Indoor Wet Bulb Temperature																							
IDB	Airflow	ID WB	59	63	67	71	59	63	67	71	59	63	67	71	59	63	67	71	59	63	67	71	59	63	67	71
70	3150	MBh	118.1	119.8	123.3	-	117.1	118.8	122.3	-	114.0	115.7	119.2	-	108.7	110.4	113.9	-	102.2	103.9	107.4	-	96.3	98.0	101.5	-
		S/T	0.59	0.53	0.41	-	0.59	0.53	0.41	-	0.62	0.55	0.43	-	0.64	0.57	0.44	-	0.67	0.60	0.46	-	0.75	0.67	0.53	-
		ΔT	20.10	18.19	14.62	-	20.05	18.14	14.57	-	20.32	18.41	14.84	-	20.03	18.12	14.55	-	19.77	17.86	14.30	-	20.97	19.06	15.49	-
		kW	7.29	7.28	7.27	-	8.18	8.18	8.16	-	9.18	9.17	9.16	-	10.26	10.25	10.23	-	11.46	11.45	11.44	-	12.87	12.86	12.85	-
		Amps	28.24	28.21	28.14	-	32.32	32.29	32.22	-	36.88	36.84	36.77	-	41.80	41.77	41.70	-	47.31	47.28	47.21	-	53.77	53.74	53.67	-
		Hi PR	274	275	277	-	317	318	320	-	362	363	365	-	410	412	413	-	463	464	466	-	518	520	522	-
		Lo PR	134	136	139	-	142	144	147	-	142	147	154	-	155	148	158	-	161	163	158	-	169	170	174	-
	3400	MBh	119.1	120.8	124.3	-	118.0	119.7	123.2	-	115.0	116.6	120.2	-	109.7	111.3	114.9	-	103.2	104.9	108.4	-	97.3	98.9	102.5	-
		S/T	0.61	0.54	0.42	-	0.61	0.55	0.42	-	0.64	0.57	0.44	-	0.66	0.59	0.45	-	0.69	0.61	0.47	-	0.78	0.70	0.54	-
		ΔT	19.45	17.54	13.97	-	19.40	17.49	13.92	-	19.67	17.76	14.19	-	19.38	17.47	13.90	-	19.12	17.21	13.65	-	20.32	18.41	14.84	-
		kW	7.32	7.31	7.30	-	8.21	8.20	8.19	-	9.20	9.20	9.18	-	10.28	10.27	10.26	-	11.48	11.48	11.46	-	12.90	12.89	12.87	-
		Amps	28.36	28.33	28.26	-	32.44	32.41	32.34	-	36.99	36.96	36.89	-	41.92	41.89	41.82	-	47.43	47.40	47.33	-	53.89	53.86	53.79	-
		Hi PR	275	276	278	-	318	319	321	-	363	364	366	-	412	413	415	-	464	465	467	-	520	521	523	-
		Lo PR	135	137	140	-	143	145	148	-	144	148	156	-	156	149	159	-	162	164	160	-	170	171	175	-
	4050	MBh	122.1	123.8	127.3	-	121.1	122.8	126.3	-	118.0	119.7	123.2	-	112.7	114.4	117.9	-	106.2	107.9	111.4	-	100.3	102.0	105.5	-
		S/T	0.66	0.58	0.44	-	0.66	0.58	0.44	-	0.69	0.61	0.46	-	0.71	0.62	0.47	-	0.74	0.65	0.49	-	0.84	0.74	0.57	-
		ΔT	18.01	16.10	12.54	-	17.96	16.05	12.49	-	18.23	16.32	12.75	-	17.94	16.03	12.47	-	17.69	15.78	12.21	-	18.88	16.97	13.41	-
		kW	7.37	7.37	7.35	-	8.27	8.26	8.24	-	9.26	9.25	9.24	-	10.34	10.33	10.32	-	11.54	11.53	11.52	-	12.95	12.95	12.93	-
		Amps	28.62	28.59	28.52	-	32.70	32.67	32.60	-	37.26	37.22	37.15	-	42.19	42.15	42.08	-	47.69	47.66	47.59	-	54.15	54.12	54.05	-
		Hi PR	279	280	282	-	322	323	325	-	367	368	370	-	415	416	418	-	467	469	471	-	523	524	526	-
		Lo PR	139	140	144	-	147	149	152	-	147	153	159	-	148	154	164	-	166	168	164	-	173	175	178	-
75	3150	MBh	118.8	120.4	123.9	129.3	117.7	119.4	122.9	128.3	114.6	116.3	119.8	125.2	109.3	111.0	114.5	119.9	102.8	104.5	108.0	113.4	96.9	98.6	102.1	107.5
		S/T	0.71	0.64	0.53	0.4	0.71	0.65	0.53	0.4	0.74	0.67	0.55	0.4	0.77	0.70	0.57	0.4	0.81	0.73	0.59	0.5	0.90	0.82	0.67	0.5
		ΔT	24.30	22.39	18.82	15.1	24.25	22.34	18.77	15.1	24.52	22.61	19.04	15.3	24.23	22.32	18.75	15.1	23.97	22.06	18.50	14.8	25.17	23.26	19.69	16.0
		kW	7.29	7.28	7.26	7.3	8.18	8.17	8.16	8.2	9.17	9.17	9.15	9.2	10.25	10.24	10.23	10.3	11.45	11.45	11.43	11.5	12.86	12.86	12.84	12.9
		Amps	28.21	28.18	28.11	28.4	32.29	32.26	32.19	32.5	36.85	36.82	36.75	37.1	41.78	41.75	41.68	42.0	47.28	47.25	47.18	47.5	53.75	53.71	53.64	54.0
		Hi PR	274	275	277	281.8	317	318	320	324.8	362	363	365	369.9	411	412	414	418.4	463	464	466	470.7	519	520	522	526.6
		Lo PR	134	136	139	144.8	140	144	147	153.0	139	148	154	160.1	140	149	159	166.1	161	163	160	170.6	169	170	174	167.6
	3400	MBh	119.7	121.4	124.9	130.3	118.7	120.3	123.9	129.2	115.6	117.2	120.8	126.2	110.3	111.9	115.5	120.9	103.8	105.5	109.0	114.4	97.9	99.5	103.1	108.5
		S/T	0.74	0.67	0.54	0.4	0.74	0.67	0.55	0.4	0.77	0.70	0.57	0.4	0.80	0.72	0.59	0.4	0.84	0.76	0.61	0.5	0.94	0.85	0.69	0.5
		ΔT	23.65	21.74	18.17	14.5	23.60	21.69	18.12	14.4	23.87	21.96	18.39	14.7	23.58	21.67	18.10	14.4	23.32	21.41	17.85	14.2	24.52	22.61	19.04	15.3
		kW	7.31	7.30	7.29	7.4	8.20	8.20	8.18	8.2	9.20	9.19	9.18	9.2	10.28	10.27	10.25	10.3	11.48	11.47	11.46	11.5	12.89	12.88	12.87	12.9
		Amps	28.33	28.30	28.23	28.5	32.41	32.38	32.31	32.6	36.97	36.94	36.87	37.2	41.90	41.86	41.79	42.1	47.40	47.37	47.30	47.6	53.86	53.83	53.76	54.1
		Hi PR	275	276	278	283.1	318	319	321	326.2	363	365	366	371.2	412	413	415	419.8	464	465	467	472.1	520	521	523	527.9
		Lo PR	135	137	140	146.0	140	145	148	154.1	139	151	156	161.2	140	152	162	167.2	162	152	162	173.1	170	171	175	168.8
	4050	MBh	122.8	124.4	128.0	133.3	121.7	123.4	126.9	132.3	118.6	120.3	123.8	129.2	113.3	115.0	118.5	123.9	106.8	108.5	112.0	117.4	100.9	102.6	106.1	111.5
		S/T	0.81	0.73	0.58	0.4	0.81	0.73	0.59	0.4	0.84	0.76	0.61	0.5	0.87	0.78	0.63	0.5	0.91	0.82	0.65	0.5	1.00	0.92	0.74	0.6
		ΔT	22.21	20.30	16.74	13.0	22.16	20.25	16.69	13.0	22.43	20.52	16.95	13.3	22.14	20.23	16.67	13.0	21.89	19.98	16.41	12.7	22.65	21.17	17.61	13.9
		kW	7.37	7.36	7.35	7.4	8.26	8.25	8.24	8.3	9.26	9.25	9.23	9.3	10.33	10.33	10.31	10.4	11.54	11.53	11.51	11.6	12.95	12.94	12.93	13.0
		Amps	28.60	28.56	28.49	28.8	32.68	32.64	32.57	32.9	37.23	37.20	37.13	37.4	42.16	42.13	42.06	42.4	47.67	47.63	47.56	47.9	54.13	54.09	54.02	54.3
		Hi PR	279	280	282	286.6	322	323	325	329.6	367	368	370	374.7	415	417	418	423.2	468	469	471	475.6	524	525	527	531.4
		Lo PR	139	140	144	149.5	139	149	152	157.6	140	154	159	164.7	139	155	165	170.7	166	156	166	176.6	173	175	178	173.6

IDB: Entering Indoor Dry Bulb Temperature

Shaded area reflects ACCA (TVA) conditions

kW = Total system power

High and low pressures are measured at the liquid and suction access fittings.

Amps: Unit amps (comp.+ evaporator + condenser fan motors)

Design Subcooling, 16 - 19 °F @ the liquid access fitting connection ARI 95 test conditions. Design Superheat 8 - 12°F @ the compressor suction access fitting connection.

			Outdoor Ambient Temperature																							
			65				75				85				95				105				115			
			Entering Indoor Wet Bulb Temperature																							
IDB	Airflow	ID WB	59	63	67	71	59	63	67	71	59	63	67	71	59	63	67	71	59	63	67	71	59	63	67	71
80	3150	MBh	119.4	121.0	124.6	129.9	118.3	120.0	123.5	128.9	115.2	116.9	120.4	125.8	109.9	111.6	240.0	120.5	103.4	105.1	108.6	114.0	97.5	99.2	102.7	108.1
		S/T	0.83	0.76	0.64	0.5	0.83	0.77	0.65	0.5	0.86	0.80	0.67	0.5	0.90	0.82	0.33	0.6	0.94	0.87	0.72	0.6	1.00	0.96	0.81	0.6
		ΔT	28.53	26.62	23.05	19.4	28.48	26.57	23.00	19.3	28.74	26.83	23.27	19.6	28.46	26.55	22.98	19.3	28.20	26.29	22.72	19.0	28.15	27.49	23.92	20.2
		kW	7.29	7.28	7.27	7.3	8.18	8.17	8.16	8.2	9.18	9.17	9.15	9.2	10.25	10.25	10.23	10.3	11.46	11.45	11.44	11.5	12.87	12.86	12.85	12.9
		Amps	28.24	28.20	28.13	28.4	32.32	32.28	32.21	32.5	36.87	36.84	36.77	37.1	41.80	41.77	41.70	42.0	47.31	47.27	47.20	47.5	53.77	53.73	53.67	54.0
		Hi PR	274	276	278	282.3	317	319	321	325.3	363	364	366	370.4	411	412	414	418.9	463	465	466	471.2	519	520	522	527.1
		Lo PR	128	136	140	145.4	127	144	148	153.5	128	152	155	160.6	156	152	161	166.6	162	152	163	172.5	169	171	174	169.5
	3400	MBh	120.3	122.0	125.5	130.9	119.3	120.9	124.5	129.8	116.2	117.9	121.4	126.8	110.9	112.6	**116.1**	121.5	104.4	106.1	109.6	115.0	98.5	100.2	103.7	109.1
		S/T	0.87	0.80	0.67	0.5	0.87	0.80	0.67	0.5	0.90	0.83	0.70	0.6	0.94	0.86	**0.72**	0.6	0.99	0.90	0.75	0.6	1.00	1.00	0.84	0.7
		ΔT	27.88	25.97	22.40	18.7	27.83	25.92	22.35	18.7	28.10	26.19	22.62	18.9	27.81	25.90	**22.33**	18.6	27.55	25.64	22.08	18.4	26.33	26.78	23.27	19.6
		kW	7.32	7.31	7.29	7.4	8.21	8.20	8.19	8.3	9.20	9.20	9.18	9.2	10.28	10.27	**10.26**	10.3	11.48	11.48	11.46	11.5	12.90	12.89	12.87	12.9
		Amps	28.35	28.32	28.25	28.6	32.43	32.40	32.33	32.6	36.99	36.96	36.89	37.2	41.92	41.89	**41.82**	42.1	47.43	47.39	47.32	47.6	53.89	53.85	53.78	54.1
		Hi PR	276	277	279	283.6	319	320	322	326.7	364	365	367	371.7	412	414	**416**	420.3	465	466	468	472.6	521	522	524	528.4
		Lo PR	128	138	141	146.6	127	146	149	154.7	151	151	156	161.8	157	152	**162**	167.8	128	152	164	173.7	170	153	175	172.0
	4050	MBh	123.4	125.0	128.6	133.9	122.3	124.0	127.5	132.9	119.2	120.9	124.4	129.8	113.9	115.6	119.1	124.5	107.5	109.1	112.6	118.0	101.5	103.2	106.7	112.1
		S/T	0.95	0.87	0.73	0.6	0.96	0.88	0.73	0.6	1.00	0.91	0.76	0.6	1.00	0.94	0.78	0.6	1.00	0.99	0.82	0.6	1.00	1.00	0.91	0.7
		ΔT	26.44	24.53	20.97	17.3	26.39	24.48	20.91	17.2	26.66	24.75	21.18	17.5	25.57	24.46	20.89	17.2	24.12	24.21	20.64	16.9	22.79	23.17	21.83	18.1
		kW	7.37	7.37	7.35	7.4	8.27	8.26	8.24	8.3	9.26	9.25	9.24	9.3	10.34	10.33	10.32	10.4	11.54	11.53	11.52	11.6	12.95	12.95	12.93	13.0
		Amps	28.62	28.58	28.51	28.8	32.70	32.66	32.59	32.9	37.25	37.22	37.15	37.5	42.18	42.15	42.08	42.4	47.69	47.66	47.59	47.9	54.15	54.12	54.05	54.4
		Hi PR	279	280	282	287.1	322	323	325	330.1	367	369	370	375.2	416	417	419	423.7	468	469	471	476.1	524	525	527	531.9
		Lo PR	128	141	144	150.1	128	149	153	158.2	127	152	160	165.3	155	152	166	171.3	159	153	169	177.2	163	162	165	175.5
85	3150	MBh	121.4	123.0	126.5	131.9	120.3	122.0	125.5	130.9	117.2	118.9	122.4	127.8	111.9	113.6	117.1	122.5	105.4	107.1	110.6	116.0	99.5	101.2	104.7	110.1
		S/T	0.92	0.86	0.73	0.6	0.93	0.86	0.74	0.6	0.96	0.89	0.76	0.6	1.00	0.92	0.79	0.7	1.00	0.97	0.83	0.7	1.00	1.00	0.92	0.8
		ΔT	32.28	30.37	26.80	23.1	32.23	30.32	26.75	23.1	32.49	30.58	27.02	23.3	32.21	30.30	26.73	23.0	30.43	30.04	26.47	22.8	28.72	29.20	27.67	24.0
		kW	7.31	7.30	7.29	7.4	8.20	8.19	8.18	8.2	9.19	9.19	9.17	9.2	10.27	10.26	10.25	10.3	11.47	11.47	11.45	11.5	12.89	12.88	12.86	12.9
		Amps	28.31	28.28	28.21	28.5	32.39	32.36	32.29	32.6	36.95	36.92	36.85	37.2	41.88	41.85	41.78	42.1	47.38	47.35	47.28	47.6	53.85	53.81	53.74	54.1
		Hi PR	276	277	279	283.6	319	320	322	326.6	364	365	367	371.7	412	414	415	420.2	465	466	468	472.5	521	522	524	528.4
		Lo PR	137	138	142	147.4	145	141	150	155.5	152	142	157	162.6	115	141	163	168.6	155	142	165	174.5	160	173	176	174.1
	3400	MBh	122.3	124.0	127.5	132.9	121.3	122.9	126.5	131.8	118.2	119.8	123.4	128.8	112.9	114.5	118.1	123.5	106.4	108.1	111.6	117.0	100.5	102.1	105.7	111.1
		S/T	0.97	0.90	0.77	0.6	0.97	0.90	0.77	0.6	1.00	0.93	0.80	0.7	1.00	0.97	0.83	0.7	1.00	1.00	0.87	0.7	1.00	1.00	0.96	0.8
		ΔT	31.63	29.72	26.15	22.5	31.58	29.67	26.10	22.4	31.60	29.94	26.37	22.7	30.18	29.65	26.08	22.4	28.45	28.89	25.83	22.1	26.87	27.31	27.02	23.3
		kW	7.33	7.33	7.31	7.4	8.23	8.22	8.20	8.3	9.22	9.21	9.20	9.3	10.30	10.29	10.27	10.3	11.50	11.49	11.48	11.5	12.91	12.91	12.89	13.0
		Amps	28.43	28.40	28.33	28.6	32.51	32.48	32.41	32.7	37.07	37.04	36.97	37.3	42.00	41.96	41.89	42.2	47.50	47.47	47.40	47.7	53.96	53.93	53.86	54.2
		Hi PR	277	278	280	284.9	320	321	323	328.0	365	366	368	373.0	414	415	417	421.6	466	467	469	473.9	522	523	525	529.7
		Lo PR	138	140	143	148.6	115	141	151	156.7	152	142	158	163.8	156	141	164	169.8	160	167	166	175.7	165	164	164	175.3
	4050	MBh	125.4	127.0	130.6	135.9	124.3	126.0	129.5	134.9	121.2	122.9	126.4	131.8	115.9	117.6	121.1	126.5	109.4	111.1	114.6	120.0	103.5	105.2	108.7	114.1
		S/T	1.00	0.99	0.84	0.7	1.00	1.00	0.85	0.7	1.00	1.00	0.88	0.7	1.00	1.00	0.91	0.7	1.00	1.00	0.95	0.8	1.00	1.00	1.00	0.9
		ΔT	28.14	28.28	24.72	21.0	27.90	28.23	24.66	21.0	27.21	27.58	24.93	21.2	26.02	26.39	24.64	20.9	24.57	24.94	24.39	20.7	23.24	23.61	24.40	21.9
		kW	7.39	7.38	7.37	7.4	8.28	8.28	8.26	8.3	9.28	9.27	9.26	9.3	10.35	10.35	10.33	10.4	11.56	11.55	11.54	11.6	12.97	12.96	12.95	13.0
		Amps	28.69	28.66	28.59	28.9	32.77	32.74	32.67	33.0	37.33	37.30	37.23	37.5	42.26	42.23	42.16	42.5	47.77	47.73	47.66	48.0	54.23	54.19	54.12	54.4
		Hi PR	281	282	284	288.4	324	325	327	331.4	369	370	372	376.5	417	418	420	425.0	470	471	473	477.4	525	527	528	533.2
		Lo PR	141	142	146	152.1	149	142	155	160.2	157	158	162	167.3	163	164	165	173.3	168	170	166	179.2	176	175	172	180.1

IDB: Entering Indoor Dry Bulb Temperature Shaded area reflects ACCA (TVA) conditions **kW = Total system power**

High and low pressures are measured at the liquid and suction access fittings. **Amps: Unit amps (comp.+ evaporator + condenser fan motors)**

Design Subcooling, 16 - 19 °F @ the liquid access fitting connection ARI 95 test conditions. Design Superheat 8 - 12°F @ the compressor suction access fitting connection.

Expanded Cooling Data

			Outdoor Ambient Temperature																							
			65				75				85				95				105				115			
			Entering Indoor Wet Bulb Temperature																							
IDB	Airflow	ID WB	59	63	67	71	59	63	67	71	59	63	67	71	59	63	67	71	59	63	67	71	59	63	67	71
70	3150	MBh	118.1	119.8	123.3	-	117.1	118.8	122.3	-	114.0	115.7	119.2	-	108.7	110.4	113.9	-	102.2	103.9	107.4	-	96.3	98.0	101.5	-
		S/T	0.59	0.53	0.41	-	0.59	0.53	0.41	-	0.62	0.55	0.43	-	0.64	0.57	0.44	-	0.67	0.60	0.46	-	0.75	0.67	0.53	-
		ΔT	20.10	18.19	14.62	-	20.05	18.14	14.57	-	20.32	18.41	14.84	-	20.03	18.12	14.55	-	19.77	17.86	14.30	-	20.97	19.06	15.49	-
		kW	7.29	7.28	7.27	-	8.18	8.18	8.16	-	9.18	9.17	9.16	-	10.26	10.25	10.23	-	11.46	11.45	11.44	-	12.87	12.86	12.85	-
		Amps	28.24	28.21	28.14	-	32.32	32.29	32.22	-	36.88	36.84	36.77	-	41.80	41.77	41.70	-	47.31	47.28	47.21	-	53.77	53.74	53.67	-
		Hi PR	274	275	277	-	317	318	320	-	362	363	365	-	410	412	413	-	463	464	466	-	518	520	522	-
		Lo PR	134	136	139	-	142	144	147	-	142	147	154	-	155	148	158	-	161	163	158	-	169	170	174	-
	3400	MBh	119.1	120.8	124.3	-	118.0	119.7	123.2	-	115.0	116.6	120.2	-	109.7	111.3	114.9	-	103.2	104.9	108.4	-	97.3	98.9	102.5	-
		S/T	0.61	0.54	0.42	-	0.61	0.55	0.42	-	0.64	0.57	0.44	-	0.66	0.59	0.45	-	0.69	0.61	0.47	-	0.78	0.70	0.54	-
		ΔT	19.45	17.54	13.97	-	19.40	17.49	13.92	-	19.67	17.76	14.19	-	19.38	17.47	13.90	-	19.12	17.21	13.65	-	20.32	18.41	14.84	-
		kW	7.32	7.31	7.30	-	8.21	8.20	8.19	-	9.20	9.20	9.18	-	10.28	10.27	10.26	-	11.48	11.48	11.46	-	12.90	12.89	12.87	-
		Amps	28.36	28.33	28.26	-	32.44	32.41	32.34	-	36.99	36.96	36.89	-	41.92	41.89	41.82	-	47.43	47.40	47.33	-	53.89	53.86	53.79	-
		Hi PR	275	276	278	-	318	319	321	-	363	364	366	-	412	413	415	-	464	465	467	-	520	521	523	-
		Lo PR	135	137	140	-	143	145	148	-	144	148	156	-	156	149	159	-	162	164	160	-	170	171	175	-
	4050	MBh	122.1	123.8	127.3	-	121.1	122.8	126.3	-	118.0	119.7	123.2	-	112.7	114.4	117.9	-	106.2	107.9	111.4	-	100.3	102.0	105.5	-
		S/T	0.66	0.58	0.44	-	0.66	0.58	0.44	-	0.69	0.61	0.46	-	0.71	0.62	0.47	-	0.74	0.65	0.49	-	0.84	0.74	0.57	-
		ΔT	18.01	16.10	12.54	-	17.96	16.05	12.49	-	18.23	16.32	12.75	-	17.94	16.03	12.47	-	17.69	15.78	12.21	-	18.88	16.97	13.41	-
		kW	7.37	7.37	7.35	-	8.27	8.26	8.24	-	9.26	9.25	9.24	-	10.34	10.33	10.32	-	11.54	11.53	11.52	-	12.95	12.95	12.93	-
		Amps	28.62	28.59	28.52	-	32.70	32.67	32.60	-	37.26	37.22	37.15	-	42.19	42.15	42.08	-	47.69	47.66	47.59	-	54.15	54.12	54.05	-
		Hi PR	279	280	282	-	322	323	325	-	367	368	370	-	415	416	418	-	467	469	471	-	523	524	526	-
		Lo PR	139	140	144	-	147	149	152	-	147	153	159	-	148	154	164	-	166	168	164	-	173	175	178	-
75	3150	MBh	118.8	120.4	123.9	129.3	117.7	119.4	122.9	128.3	114.6	116.3	119.8	125.2	109.3	111.0	114.5	119.9	102.8	104.5	108.0	113.4	96.9	98.6	102.1	107.5
		S/T	0.71	0.64	0.53	0.4	0.71	0.65	0.53	0.4	0.74	0.67	0.55	0.4	0.77	0.70	0.57	0.4	0.81	0.73	0.59	0.5	0.90	0.82	0.67	0.5
		ΔT	24.30	22.39	18.82	15.1	24.25	22.34	18.77	15.1	24.52	22.61	19.04	15.3	24.23	22.32	18.75	15.1	23.97	22.06	18.50	14.8	25.17	23.26	19.69	16.0
		kW	7.29	7.28	7.26	7.3	8.18	8.17	8.16	8.2	9.17	9.17	9.15	9.2	10.25	10.24	10.23	10.3	11.45	11.45	11.43	11.5	12.86	12.86	12.84	12.9
		Amps	28.21	28.18	28.11	28.4	32.29	32.26	32.19	32.5	36.85	36.82	36.75	37.1	41.78	41.75	41.68	42.0	47.28	47.25	47.18	47.5	53.75	53.71	53.64	54.0
		Hi PR	274	275	277	281.8	317	318	320	324.8	362	363	365	369.9	411	412	414	418.4	463	464	466	470.7	519	520	522	526.6
		Lo PR	134	136	139	144.8	140	144	147	153.0	139	148	154	160.1	140	149	159	166.1	161	163	160	170.6	169	170	174	167.6
	3400	MBh	119.7	121.4	124.9	130.3	118.7	120.3	123.9	129.2	115.6	117.2	120.8	126.2	110.3	111.9	115.5	120.9	103.8	105.5	109.0	114.4	97.9	99.5	103.1	108.5
		S/T	0.74	0.67	0.54	0.4	0.74	0.67	0.55	0.4	0.77	0.70	0.57	0.4	0.80	0.72	0.59	0.4	0.84	0.76	0.61	0.5	0.94	0.85	0.69	0.5
		ΔT	23.65	21.74	18.17	14.5	23.60	21.69	18.12	14.4	23.87	21.96	18.39	14.7	23.58	21.67	18.10	14.4	23.32	21.41	17.85	14.2	24.52	22.61	19.04	15.3
		kW	7.31	7.30	7.29	7.4	8.20	8.20	8.18	8.2	9.20	9.19	9.18	9.2	10.28	10.27	10.25	10.3	11.48	11.47	11.46	11.5	12.89	12.88	12.87	12.9
		Amps	28.33	28.30	28.23	28.5	32.41	32.38	32.31	32.6	36.97	36.94	36.87	37.2	41.90	41.86	41.79	42.1	47.40	47.37	47.30	47.6	53.86	53.83	53.76	54.1
		Hi PR	275	276	278	283.1	318	319	321	326.2	363	365	366	371.2	412	413	415	419.8	464	465	467	472.1	520	521	523	527.9
		Lo PR	135	137	140	146.0	140	145	148	154.1	139	151	156	161.2	140	152	162	167.2	162	152	162	173.1	170	171	175	168.8
	4050	MBh	122.8	124.4	128.0	133.3	121.7	123.4	126.9	132.3	118.6	120.3	123.8	129.2	113.3	115.0	118.5	123.9	106.8	108.5	112.0	117.4	100.9	102.6	106.1	111.5
		S/T	0.81	0.73	0.58	0.4	0.81	0.73	0.59	0.4	0.84	0.76	0.61	0.5	0.87	0.78	0.63	0.5	0.91	0.82	0.65	0.5	1.00	0.92	0.74	0.6
		ΔT	22.21	20.30	16.74	13.0	22.16	20.25	16.69	13.0	22.43	20.52	16.95	13.3	22.14	20.23	16.67	13.0	21.89	19.98	16.41	12.7	22.65	21.17	17.61	13.9
		kW	7.37	7.36	7.35	7.4	8.26	8.25	8.24	8.3	9.26	9.25	9.23	9.3	10.33	10.33	10.31	10.4	11.54	11.53	11.51	11.6	12.95	12.94	12.93	13.0
		Amps	28.60	28.56	28.49	28.8	32.68	32.64	32.57	32.9	37.23	37.20	37.13	37.4	42.16	42.13	42.06	42.4	47.67	47.63	47.56	47.9	54.13	54.09	54.02	54.3
		Hi PR	279	280	282	286.6	322	323	325	329.6	367	368	370	374.7	415	417	418	423.2	468	469	471	475.6	524	525	527	531.4
		Lo PR	139	140	144	149.5	139	149	152	157.6	140	154	159	164.7	139	155	165	170.7	166	156	166	176.6	173	175	178	173.6

IDB: Entering Indoor Dry Bulb Temperature

Shaded area reflects ACCA (TVA) conditions

kW = Total system power

High and low pressures are measured at the liquid and suction access fittings.

Amps: Unit amps (comp.+ evaporator + condenser fan motors)

Design Subcooling, 16 - 19 °F @ the liquid access fitting connection ARI 95 test conditions. Design Superheat 8 - 12°F @ the compressor suction access fitting connection.

			Outdoor Ambient Temperature																							
			65				75				85				95				105				115			
			Entering Indoor Wet Bulb Temperature																							
IDB	Airflow	ID WB	59	63	67	71	59	63	67	71	59	63	67	71	59	63	67	71	59	63	67	71	59	63	67	71
80	3150	MBh	119.4	121.0	124.6	129.9	118.3	120.0	123.5	128.9	115.2	116.9	120.4	125.8	109.9	111.6	240.0	120.5	103.4	105.1	108.6	114.0	97.5	99.2	102.7	108.1
		S/T	0.83	0.76	0.64	0.5	0.83	0.77	0.65	0.5	0.86	0.80	0.67	0.5	0.90	0.82	0.33	0.6	0.94	0.87	0.72	0.6	1.00	0.96	0.81	0.6
		ΔT	28.53	26.62	23.05	19.4	28.48	26.57	23.00	19.3	28.74	26.83	23.27	19.6	28.46	26.55	22.98	19.3	28.20	26.29	22.72	19.0	28.15	27.49	23.92	20.2
		kW	7.29	7.28	7.27	7.3	8.18	8.17	8.16	8.2	9.18	9.17	9.15	9.2	10.25	10.25	10.23	10.3	11.46	11.45	11.44	11.5	12.87	12.86	12.85	12.9
		Amps	28.24	28.20	28.13	28.4	32.32	32.28	32.21	32.5	36.87	36.84	36.77	37.1	41.80	41.77	41.70	42.0	47.31	47.27	47.20	47.5	53.77	53.73	53.67	54.0
		Hi PR	274	276	278	282.3	317	319	321	325.3	363	364	366	370.4	411	412	414	418.9	463	465	466	471.2	519	520	522	527.1
		Lo PR	128	136	140	145.4	127	144	148	153.5	128	152	155	160.6	156	152	161	166.6	162	152	163	172.5	169	171	174	169.5
	3400	MBh	120.3	122.0	125.5	130.9	119.3	120.9	124.5	129.8	116.2	117.9	121.4	126.8	110.9	112.6	**116.1**	121.5	104.4	106.1	109.6	115.0	98.5	100.2	103.7	109.1
		S/T	0.87	0.80	0.67	0.5	0.87	0.80	0.67	0.5	0.90	0.83	0.70	0.6	0.94	0.86	**0.72**	0.6	0.99	0.90	0.75	0.6	1.00	1.00	0.84	0.7
		ΔT	27.88	25.97	22.40	18.7	27.83	25.92	22.35	18.7	28.10	26.19	22.62	18.9	27.81	25.90	**22.33**	18.6	27.55	25.64	22.08	18.4	26.33	26.78	23.27	19.6
		kW	7.32	7.31	7.29	7.4	8.21	8.20	8.19	8.3	9.20	9.20	9.18	9.2	10.28	10.27	**10.26**	10.3	11.48	11.48	11.46	11.5	12.90	12.89	12.87	12.9
		Amps	28.35	28.32	28.25	28.6	32.43	32.40	32.33	32.6	36.99	36.96	36.89	37.2	41.92	41.89	**41.82**	42.1	47.43	47.39	47.32	47.6	53.89	53.85	53.78	54.1
		Hi PR	276	277	279	283.6	319	320	322	326.7	364	365	367	371.7	412	414	**416**	420.3	465	466	468	472.6	521	522	524	528.4
		Lo PR	128	138	141	146.6	127	146	149	154.7	151	151	156	161.8	157	152	**162**	167.8	128	152	164	173.7	170	153	175	172.0
	4050	MBh	123.4	125.0	128.6	133.9	122.3	124.0	127.5	132.9	119.2	120.9	124.4	129.8	113.9	115.6	119.1	124.5	107.5	109.1	112.6	118.0	101.5	103.2	106.7	112.1
		S/T	0.95	0.87	0.73	0.6	0.96	0.88	0.73	0.6	1.00	0.91	0.76	0.6	1.00	0.94	0.78	0.6	1.00	0.99	0.82	0.6	1.00	1.00	0.91	0.7
		ΔT	26.44	24.53	20.97	17.3	26.39	24.48	20.91	17.2	26.66	24.75	21.18	17.5	25.57	24.46	20.89	17.2	24.12	24.21	20.64	16.9	22.79	23.17	21.83	18.1
		kW	7.37	7.37	7.35	7.4	8.27	8.26	8.24	8.3	9.26	9.25	9.24	9.3	10.34	10.33	10.32	10.4	11.54	11.53	11.52	11.6	12.95	12.95	12.93	13.0
		Amps	28.62	28.58	28.51	28.8	32.70	32.66	32.59	32.9	37.25	37.22	37.15	37.5	42.18	42.15	42.08	42.4	47.69	47.66	47.59	47.9	54.15	54.12	54.05	54.4
		Hi PR	279	280	282	287.1	322	323	325	330.1	367	369	370	375.2	416	417	419	423.7	468	469	471	476.1	524	525	527	531.9
		Lo PR	128	141	144	150.1	128	149	153	158.2	127	152	160	165.3	155	152	166	171.3	159	153	169	177.2	163	162	165	175.5
85	3150	MBh	121.4	123.0	126.5	131.9	120.3	122.0	125.5	130.9	117.2	118.9	122.4	127.8	111.9	113.6	117.1	122.5	105.4	107.1	110.6	116.0	99.5	101.2	104.7	110.1
		S/T	0.92	0.86	0.73	0.6	0.93	0.86	0.74	0.6	0.96	0.89	0.76	0.6	1.00	0.92	0.79	0.7	1.00	0.97	0.83	0.7	1.00	1.00	0.92	0.8
		ΔT	32.28	30.37	26.80	23.1	32.23	30.32	26.75	23.1	32.49	30.58	27.02	23.3	32.21	30.30	26.73	23.0	30.43	30.04	26.47	22.8	28.72	29.20	27.67	24.0
		kW	7.31	7.30	7.29	7.4	8.20	8.19	8.18	8.2	9.19	9.19	9.17	9.2	10.27	10.26	10.25	10.3	11.47	11.47	11.45	11.5	12.89	12.88	12.86	12.9
		Amps	28.31	28.28	28.21	28.5	32.39	32.36	32.29	32.6	36.95	36.92	36.85	37.2	41.88	41.85	41.78	42.1	47.38	47.35	47.28	47.6	53.85	53.81	53.74	54.1
		Hi PR	276	277	279	283.6	319	320	322	326.6	364	365	367	371.7	412	414	415	420.2	465	466	468	472.5	521	522	524	528.4
		Lo PR	137	138	142	147.4	145	141	150	155.5	152	142	157	162.6	115	141	163	168.6	155	142	165	174.5	160	173	176	174.1
	3400	MBh	122.3	124.0	127.5	132.9	121.3	122.9	126.5	131.8	118.2	119.8	123.4	128.8	112.9	114.5	118.1	123.5	106.4	108.1	111.6	117.0	100.5	102.1	105.7	111.1
		S/T	0.97	0.90	0.77	0.6	0.97	0.90	0.77	0.6	1.00	0.93	0.80	0.7	1.00	0.97	0.83	0.7	1.00	1.00	0.87	0.7	1.00	1.00	0.96	0.8
		ΔT	31.63	29.72	26.15	22.5	31.58	29.67	26.10	22.4	31.60	29.94	26.37	22.7	30.18	29.65	26.08	22.4	28.45	28.89	25.83	22.1	26.87	27.31	27.02	23.3
		kW	7.33	7.33	7.31	7.4	8.23	8.22	8.20	8.3	9.22	9.21	9.20	9.3	10.30	10.29	10.27	10.3	11.50	11.49	11.48	11.5	12.91	12.91	12.89	13.0
		Amps	28.43	28.40	28.33	28.6	32.51	32.48	32.41	32.7	37.07	37.04	36.97	37.3	42.00	41.96	41.89	42.2	47.50	47.47	47.40	47.7	53.96	53.93	53.86	54.2
		Hi PR	277	278	280	284.9	320	321	323	328.0	365	366	368	373.0	414	415	417	421.6	466	467	469	473.9	522	523	525	529.7
		Lo PR	138	140	143	148.6	115	141	151	156.7	152	142	158	163.8	156	141	164	169.8	160	167	166	175.7	165	164	164	175.3
	4050	MBh	125.4	127.0	130.6	135.9	124.3	126.0	129.5	134.9	121.2	122.9	126.4	131.8	115.9	117.6	121.1	126.5	109.4	111.1	114.6	120.0	103.5	105.2	108.7	114.1
		S/T	1.00	0.99	0.84	0.7	1.00	1.00	0.85	0.7	1.00	1.00	0.88	0.7	1.00	1.00	0.91	0.7	1.00	1.00	0.95	0.8	1.00	1.00	1.00	0.9
		ΔT	28.14	28.28	24.72	21.0	27.90	28.23	24.66	21.0	27.21	27.58	24.93	21.2	26.02	26.39	24.64	20.9	24.57	24.94	24.39	20.7	23.24	23.61	24.40	21.9
		kW	7.39	7.38	7.37	7.4	8.28	8.28	8.26	8.3	9.28	9.27	9.26	9.3	10.35	10.35	10.33	10.4	11.56	11.55	11.54	11.6	12.97	12.96	12.95	13.0
		Amps	28.69	28.66	28.59	28.9	32.77	32.74	32.67	33.0	37.33	37.30	37.23	37.5	42.26	42.23	42.16	42.5	47.77	47.73	47.66	48.0	54.23	54.19	54.12	54.4
		Hi PR	281	282	284	288.4	324	325	327	331.4	369	370	372	376.5	417	418	420	425.0	470	471	473	477.4	525	527	528	533.2
		Lo PR	141	142	146	152.1	149	142	155	160.2	157	158	162	167.3	163	164	165	173.3	168	170	166	179.2	176	175	172	180.1

IDB: Entering Indoor Dry Bulb Temperature Shaded area reflects ACCA (TVA) conditions **kW = Total system power**

High and low pressures are measured at the liquid and suction access fittings. **Amps: Unit amps (comp.+ evaporator + condenser fan motors)**

Design Subcooling, 16 - 19 °F @ the liquid access fitting connection ARI 95 test conditions. Design Superheat 8 - 12°F @ the compressor suction access fitting connection.

Electrical Heater Data

MINIMUM AIR FLOW FOR ELECTRIC HEAT										
Model #	Min Airflow	EHXD-3M15	EHXD-3M30	EHXD-3M45	EHXD-4M15	EHXD-4M30	EHXD-4M45	EHXD-7M15	EHXD-7M30	EHXD-7M45
Stages		1	2		1	2		1	2	
DSC0903	2400	X	X	X						
DSC0904					X	X	X			
DSC0907								X	X	X
DSC1023	2750	X	X	X						
DSC1024					X	X	X			
DSC1027								X	X	X
DSC1023	3200	X	X	X						
DSC1204					X	X	X			
DSC1207								X	X	X
DSC1503	3750	X	X	X						
DSC1504					X	X	X			
DSC1507								X	X	X

7.5 Ton Cooler • Standard Static Direct Drive • Models: DSC0903D, DSC0904D, DSC0907D

Down Flow				
Speed Tap	**ESP**	**CFM**	**RPM**	**BHP**
T1**	0.2	1927	436	0.20
	0.4	1750	518	0.24
	0.6	1579	598	0.28
	0.8	-	-	-
T2**	0.2	2170	465	0.28
	0.4	2002	541	0.33
	0.6	1841	616	0.38
	0.8	1572	706	0.43
T3	0.2	3114	580	0.71
	0.4	2981	636	0.78
	0.6	2857	693	0.85
	0.8	2705	752	0.92
T4	0.2	3244	596	0.79
	0.4	3116	650	0.86
	0.6	2995	704	0.93
	0.8	2857	760	1.00
T5	0.2	3370	612	0.87
	0.4	3246	663	0.94
	0.6	3129	715	1.01
	0.8	3002	768	1.09
T6	0.2	2842	547	0.57
	0.4	2700	608	0.63
	0.6	2566	670	0.69
	0.8	2383	737	0.76
T7	0.2	3048	572	0.59
	0.4	2913	629	0.65
	0.6	2786	687	0.71
	0.8	2627	748	0.78
T8	0.2	3180	588	0.75
	0.4	3049	643	0.82
	0.6	2927	699	0.89
	0.8	2782	756	0.96
T9	0.2	3244	596	0.79
	0.4	3116	650	0.86
	0.6	2995	704	0.93
	0.8	2857	760	1.00
T10	0.2	3370	612	0.87
	0.4	3246	663	0.94
	0.6	3129	715	1.01
	0.8	3002	768	1.09

Horizontal Flow				
Speed Tap	**ESP**	**CFM**	**RPM**	**BHP**
T1**	0.2	1952	453	0.21
	0.4	1844	526	0.25
	0.6	1671	607	0.28
	0.8	-	-	-
T2**	0.2	2182	486	0.30
	0.4	2074	554	0.34
	0.6	1915	629	0.38
	0.8	1621	716	0.44
T3	0.2	3084	617	0.76
	0.4	2977	667	0.82
	0.6	2869	719	0.88
	0.8	2737	773	0.95
T4	0.2	3209	635	0.84
	0.4	3103	683	0.90
	0.6	3001	732	0.97
	0.8	2886	783	1.04
T5	0.2	3330	652	0.92
	0.4	3225	698	0.99
	0.6	3128	745	1.06
	0.8	3029	793	1.12
T6	0.2	2823	579	0.60
	0.4	2715	634	0.66
	0.6	2594	692	0.72
	0.8	2420	755	0.78
T7	0.2	3020	608	0.63
	0.4	2913	659	0.68
	0.6	2802	712	0.74
	0.8	2660	769	0.80
T8	0.2	3147	626	0.80
	0.4	3040	675	0.86
	0.6	2935	725	0.92
	0.8	2812	778	0.99
T9	0.2	3209	635	0.84
	0.4	3103	683	0.90
	0.6	3001	732	0.97
	0.8	2886	783	1.04
T10	0.2	3330	652	0.92
	0.4	3225	698	0.99
	0.6	3128	745	1.06
	0.8	3029	793	1.12

Shaded speed tap - Airflow for supplimental heat.
** (T1) and (T2) are part load only

7.5 Ton Cooler • Medium Static Direct Drive • Models: DSC0903L, DSC0904L, DSC0907L

Down Flow				
Speed Tap	ESP	CFM	RPM	BHP
T1**	0.2	2090	456	0.26
	0.4	1919	534	0.30
	0.6	1755	610	0.34
	0.8	-	-	-
	1	-	-	-
	1.2	-	-	-
	1.4	-	-	-
T2**	0.2	2700	529	0.50
	0.4	2552	594	0.56
	0.6	2413	658	0.62
	0.8	2214	730	0.69
	1	2022	792	0.75
	1.2	1865	845	0.80
	1.4	1727	880	0.83
T3	0.2	3370	612	0.87
	0.4	3246	663	0.94
	0.6	3129	715	1.01
	0.8	3002	768	1.09
	1	2864	822	1.16
	1.2	2733	872	1.24
	1.4	2612	915	1.30
T4	0.2	3552	634	0.99
	0.4	3433	683	1.06
	0.6	3321	732	1.14
	0.8	3210	781	1.22
	1	3083	832	1.30
	1.2	2959	881	1.37
	1.4	2843	926	1.44
T5	0.2	3668	649	1.07
	0.4	3552	696	1.15
	0.6	3443	743	1.23
	0.8	3340	789	1.30
	1	3221	839	1.39
	1.2	3100	888	1.47
	1.4	2987	933	1.54
T6	0.2	3212	592	0.77
	0.4	3083	647	0.84
	0.6	2961	701	0.91
	0.8	2819	758	0.98
	1	2670	814	1.06
	1.2	2533	865	1.12
	1.4	2408	906	1.18
T7	0.2	3370	612	0.87
	0.4	3246	663	0.94
	0.6	3129	715	1.01
	0.8	3002	768	1.09
	1	2864	822	1.16
	1.2	2733	872	1.24
	1.4	2612	915	1.30
T8	0.2	3492	627	0.95
	0.4	3371	676	1.02
	0.6	3258	727	1.10
	0.8	3142	776	1.17
	1	3012	829	1.25
	1.2	2885	878	1.33
	1.4	2768	922	1.39
T9	0.2	3552	634	0.99
	0.4	3433	683	1.06
	0.6	3321	732	1.14
	0.8	3210	781	1.22
	1	3083	832	1.30
	1.2	2959	881	1.37
	1.4	2843	926	1.44
T10	0.2	3668	649	1.07
	0.4	3552	696	1.15
	0.6	3443	743	1.23
	0.8	3340	789	1.30
	1	3221	839	1.39
	1.2	3100	888	1.47
	1.4	2987	933	1.54

Horizontal Flow				
Speed Tap	ESP	CFM	RPM	BHP
T1**	0.2	2106	475	0.27
	0.4	1998	545	0.31
	0.6	1835	622	0.35
	0.8	1525	712	0.40
	1	-	-	-
	1.2	-	-	-
	1.4	-	-	-
T2**	0.2	2687	559	0.53
	0.4	2579	617	0.58
	0.6	2450	678	0.64
	0.8	2253	746	0.70
	1	2091	807	0.76
	1.2	1951	857	0.81
	1.4	1757	916	0.86
T3	0.2	3330	652	0.92
	0.4	3225	698	0.99
	0.6	3128	745	1.06
	0.8	3029	793	1.12
	1	2911	844	1.20
	1.2	2803	891	1.26
	1.4	2621	952	1.35
T4	0.2	3504	678	1.06
	0.4	3401	721	1.12
	0.6	3312	764	1.19
	0.8	3233	808	1.26
	1	3125	857	1.34
	1.2	3024	902	1.41
	1.4	2849	963	1.50
T5	0.2	3616	694	1.15
	0.4	3514	736	1.22
	0.6	3430	777	1.29
	0.8	3362	818	1.35
	1	3259	865	1.43
	1.2	3163	910	1.50
	1.4	2994	970	1.60
T6	0.2	3178	630	0.82
	0.4	3072	679	0.88
	0.6	2968	729	0.95
	0.8	2849	781	1.01
	1	2721	835	1.08
	1.2	2606	882	1.14
	1.4	2420	943	1.22
T7	0.2	3330	652	0.92
	0.4	3225	698	0.99
	0.6	3128	745	1.06
	0.8	3029	793	1.12
	1	2911	844	1.20
	1.2	2803	891	1.26
	1.4	2621	952	1.35
T8	0.2	3447	670	1.01
	0.4	3343	714	1.08
	0.6	3252	758	1.15
	0.8	3167	803	1.21
	1	3055	853	1.29
	1.2	2952	898	1.36
	1.4	2775	959	1.45
T9	0.2	3504	678	1.06
	0.4	3401	721	1.12
	0.6	3312	764	1.19
	0.8	3233	808	1.26
	1	3125	857	1.34
	1.2	3024	902	1.41
	1.4	2849	963	1.50
T10	0.2	3616	694	1.15
	0.4	3514	736	1.22
	0.6	3430	777	1.29
	0.8	3362	818	1.35
	1	3259	865	1.43
	1.2	3163	910	1.50
	1.4	2994	970	1.60

Shaded speed tap - Airflow for supplimental heat.
** (T1) and (T2) are part load only

7.5 Ton Cooler • High Static Direct Drive • Models: DSC0903W, DSC0904W, DSC0907W

Down Flow				
Speed Tap	ESP	CFM	RPM	BHP
T1	0.2	2402.9	493.3	0.37
	0.4	2244.2	564.3	0.42
	0.6	2093.4	634.4	0.48
	0.8	1855.9	715.7	0.54
	1	1637.8	781.2	0.59
	1.2	-	-	-
	1.4	-	-	-
	1.6	-	-	-
	1.8	-	-	-
T2	0.2	2553.2	511.5	0.43
	0.4	2400.3	579.3	0.49
	0.6	2255.6	646.3	0.55
	0.8	2037.8	722.7	0.61
	1	1833.5	786.4	0.67
	1.2	-	-	-
	1.4	-	-	-
	1.6	-	-	-
	1.8	-	-	-
T3	0.2	3551.9	634.1	0.99
	0.4	3432.6	682.8	1.06
	0.6	3320.8	732.1	1.14
	0.8	3209.7	780.5	1.22
	1	3083.3	832.2	1.30
	1.2	2958.7	881.4	1.37
	1.4	2842.8	925.7	1.44
	1.6	2620.1	989.9	1.54
	1.8	2488.5	1038.8	1.62
T4	0.2	3779.7	662.7	1.16
	0.4	3666.4	708.0	1.24
	0.6	3560.0	753.8	1.32
	0.8	3464.9	797.6	1.39
	1	3351.7	846.6	1.48
	1.2	3235.1	894.3	1.56
	1.4	3124.7	939.8	1.64
	1.6	2913.7	992.3	1.74
	1.8	2808.6	1041.8	1.82
T5	0.2	3861.0	673.0	1.22
	0.4	3749.6	717.2	1.31
	0.6	3644.7	761.8	1.39
	0.8	3554.3	804.2	1.46
	1	3445.4	852.2	1.55
	1.2	3331.5	899.3	1.64
	1.4	3223.0	945.1	1.72
	1.6	3017.3	994.0	1.81
	1.8	2920.1	1043.4	1.90

Horizontal Flow				
Speed Tap	ESP	CFM	RPM	BHP
T1	0.2	2404.3	518.5	0.39
	0.4	2295.7	581.7	0.44
	0.6	2150.4	650.1	0.49
	0.8	1901.0	728.4	0.55
	1	1717.1	794.1	0.60
	1.2	1561.5	845.1	0.64
	1.4	-	-	-
	1.6	-	-	-
	1.8	-	-	-
T2	0.2	2547.7	539.2	0.46
	0.4	2439.1	599.5	0.51
	0.6	2302.2	664.1	0.56
	0.8	2080.1	737.0	0.62
	1	1907.1	800.5	0.68
	1.2	1759.9	851.0	0.72
	1.4	-	-	-
	1.6	-	-	-
	1.8	-	-	-
T3	0.2	3504.1	677.8	1.06
	0.4	3400.9	721.1	1.12
	0.6	3312.2	764.4	1.19
	0.8	3233.1	807.6	1.26
	1	3124.7	856.7	1.34
	1.2	3023.9	901.9	1.41
	1.4	2849.3	962.7	1.50
	1.6	2727.6	1009.2	1.57
	1.8	2574.8	1058.8	1.65
T4	0.2	3723.7	709.9	1.24
	0.4	3623.4	750.1	1.31
	0.6	3543.2	789.8	1.38
	0.8	3484.0	828.2	1.45
	1	3387.6	873.9	1.53
	1.2	3294.3	917.4	1.60
	1.4	3131.8	976.5	1.71
	1.6	3015.0	1022.5	1.79
	1.8	2893.4	1063.4	1.86
T5	0.2	3802.1	721.3	1.31
	0.4	3703.2	760.6	1.38
	0.6	3625.6	799.2	1.45
	0.8	3571.9	836.0	1.52
	1	3479.4	880.6	1.60
	1.2	3388.4	923.5	1.68
	1.4	3231.2	981.6	1.79
	1.6	3116.5	1027.3	1.87
	1.8	3004.5	1065.6	1.94

7.5 Ton Cooler • High Static Direct Drive • Models: DSC0903W, DSC0904W, DSC0907W

Down Flow				
Speed Tap	ESP	CFM	RPM	BHP
T6	0.2	3431.9	619.2	0.91
	0.4	3309.1	669.9	0.98
	0.6	3194.2	721.0	1.06
	0.8	3073.0	772.2	1.13
	1	2938.8	825.4	1.21
	1.2	2809.9	875.3	1.28
	1.4	2691.0	918.6	1.35
	1.6	2463.8	989.6	1.45
	1.8	2316.0	1038.1	1.52
T7	0.2	3581.3	637.8	1.01
	0.4	3462.7	686.0	1.09
	0.6	3351.8	734.8	1.16
	0.8	3242.9	782.6	1.24
	1	3118.3	833.9	1.32
	1.2	2994.8	883.0	1.40
	1.4	2879.6	927.5	1.47
	1.6	2658.1	990.0	1.57
	1.8	2530.3	1039.1	1.64
T8	0.2	3724.3	655.7	1.12
	0.4	3609.6	701.8	1.19
	0.6	3501.9	748.4	1.27
	0.8	3403.3	793.3	1.35
	1	3287.2	842.9	1.43
	1.2	3168.7	891.0	1.52
	1.4	3056.9	936.3	1.59
	1.6	2842.7	991.5	1.69
	1.8	2731.7	1040.9	1.77
T9	0.2	3779.7	662.7	1.16
	0.4	3666.4	708.0	1.24
	0.6	3560.0	753.8	1.32
	0.8	3464.9	797.6	1.39
	1	3351.7	846.6	1.48
	1.2	3235.1	894.3	1.56
	1.4	3124.7	939.8	1.64
	1.6	2913.7	992.3	1.74
	1.8	2808.6	1041.8	1.82
T10	0.2	3861.0	673.0	1.22
	0.4	3749.6	717.2	1.31
	0.6	3644.7	761.8	1.39
	0.8	3554.3	804.2	1.46
	1	3445.4	852.2	1.55
	1.2	3331.5	899.3	1.64
	1.4	3223.0	945.1	1.72
	1.6	3017.3	994.0	1.81
	1.8	2920.1	1043.4	1.90

Horizontal Flow				
Speed Tap	ESP	CFM	RPM	BHP
T6	0.2	3388.8	661.0	0.97
	0.4	3284.3	706.1	1.03
	0.6	3190.6	751.5	1.10
	0.8	3098.7	797.6	1.17
	1	2983.6	848.4	1.24
	1.2	2878.2	894.4	1.31
	1.4	2698.6	955.7	1.40
	1.6	2574.7	1002.2	1.47
	1.8	2403.4	1057.1	1.55
T7	0.2	3532.4	682.0	1.08
	0.4	3429.5	724.8	1.15
	0.6	3341.9	767.6	1.22
	0.8	3265.7	810.1	1.28
	1	3159.0	858.8	1.36
	1.2	3059.2	903.8	1.43
	1.4	2886.0	964.5	1.53
	1.6	2764.9	1010.9	1.60
	1.8	2616.4	1059.3	1.68
T8	0.2	3670.2	702.1	1.19
	0.4	3569.2	743.0	1.26
	0.6	3486.9	783.5	1.33
	0.8	3423.5	823.0	1.40
	1	3324.3	869.5	1.48
	1.2	3229.3	913.5	1.55
	1.4	3063.6	973.1	1.66
	1.6	2945.5	1019.3	1.73
	1.8	2816.7	1062.1	1.81
T9	0.2	3723.7	709.9	1.24
	0.4	3623.4	750.1	1.31
	0.6	3543.2	789.8	1.38
	0.8	3484.0	828.2	1.45
	1	3387.6	873.9	1.53
	1.2	3294.3	917.4	1.60
	1.4	3131.8	976.5	1.71
	1.6	3015.0	1022.5	1.79
	1.8	2893.4	1063.4	1.86
T10	0.2	3802.1	721.3	1.31
	0.4	3703.2	760.6	1.38
	0.6	3625.6	799.2	1.45
	0.8	3571.9	836.0	1.52
	1	3479.4	880.6	1.60
	1.2	3388.4	923.5	1.68
	1.4	3231.2	981.6	1.79
	1.6	3116.5	1027.3	1.87
	1.8	3004.5	1065.6	1.94

Shaded speed tap - Airflow for supplimental heat.
** (T1) and (T2) are part load only

8.5 Ton Cooler • Standard Static Direct Drive • Models: DSC1023D, DSC1024D, DSC1027D

Down Flow				
Speed Tap	**ESP**	**CFM**	**RPM**	**BHP**
T1**	0.2	2090	456	0.26
	0.4	1919	534	0.30
	0.6	1755	610	0.34
	0.8	-	-	-
T2**	0.2	2248	475	0.31
	0.4	2084	549	0.36
	0.6	1927	622	0.41
	0.8	-	-	-
T3	0.2	3295	602	0.82
	0.4	3168	655	0.89
	0.6	3049	709	0.96
	0.8	2916	763	1.04
T4	0.2	3628	644	1.04
	0.4	3510	691	1.12
	0.6	3401	739	1.20
	0.8	3295	786	1.27
T5	0.2	3724	656	1.12
	0.4	3610	702	1.19
	0.6	3502	748	1.27
	0.8	3403	793	1.35
T6	0.2	3114	580	0.71
	0.4	2981	636	0.78
	0.6	2857	693	0.85
	0.8	2705	752	0.92
T7	0.2	3320	605	0.74
	0.4	3194	658	0.81
	0.6	3076	711	0.87
	0.8	2945	765	0.94
T8	0.2	3462	623	0.93
	0.4	3340	673	1.00
	0.6	3226	724	1.08
	0.8	3108	774	1.15
T9	0.2	3628	644	1.04
	0.4	3510	691	1.12
	0.6	3401	739	1.20
	0.8	3295	786	1.27
T10	0.2	3724	656	1.12
	0.4	3610	702	1.19
	0.6	3502	748	1.27
	0.8	3403	793	1.35

Horizontal Flow				
Speed Tap	**ESP**	**CFM**	**RPM**	**BHP**
T1**	0.2	2106	475	0.27
	0.4	1998	545	0.31
	0.6	1835	622	0.35
	0.8	-	-	-
T2**	0.2	2257	497	0.33
	0.4	2149	564	0.37
	0.6	1995	636	0.42
	0.8	1716	720	0.47
T3	0.2	3258	642	0.87
	0.4	3152	689	0.94
	0.6	3052	737	1.00
	0.8	2944	787	1.07
T4	0.2	3577	688	1.12
	0.4	3475	731	1.18
	0.6	3389	773	1.25
	0.8	3317	814	1.32
T5	0.2	3670	702	1.19
	0.4	3569	743	1.26
	0.6	3487	784	1.33
	0.8	3423	823	1.40
T6	0.2	3084	617	0.76
	0.4	2977	667	0.82
	0.6	2869	719	0.88
	0.8	2737	773	0.95
T7	0.2	3282	645	0.79
	0.4	3176	692	0.85
	0.6	3078	740	0.91
	0.8	2973	789	0.97
T8	0.2	3418	665	0.99
	0.4	3314	710	1.06
	0.6	3221	755	1.12
	0.8	3133	800	1.19
T9	0.2	3577	688	1.12
	0.4	3475	731	1.18
	0.6	3389	773	1.25
	0.8	3317	814	1.32
T10	0.2	3670	702	1.19
	0.4	3569	743	1.26
	0.6	3487	784	1.33
	0.8	3423	823	1.40

Shaded speed tap - Airflow for supplimental heat.
** (T1) and (T2) are part load only

8.5 Ton Cooler • Medium Static Direct Drive • Models: DSC1023L, DSC1024L, DSC1027L

Down Flow				
Speed Tap	ESP	CFM	RPM	BHP
T1**	0.2	2209	470	0.30
	0.4	2043	545	0.35
	0.6	1884	619	0.39
	0.8	-	-	-
	1	-	-	-
	1.2	-	-	-
	1.4	-	-	-
T2**	0.2	2418	495	0.38
	0.4	2260	566	0.43
	0.6	2110	636	0.48
	0.8	1874	716	0.55
	1	-	-	-
	1.2	-	-	-
	1.4	-	-	-
T3	0.2	3552	634	0.99
	0.4	3433	683	1.06
	0.6	3321	732	1.14
	0.8	3210	781	1.22
	1	3083	832	1.30
	1.2	2959	881	1.37
	1.4	2843	926	1.44
T4	0.2	3914	680	1.27
	0.4	3804	723	1.35
	0.6	3700	767	1.43
	0.8	3612	809	1.51
	1	3506	856	1.60
	1.2	3393	903	1.69
	1.4	3286	949	1.77
T5	0.2	4002	691	1.35
	0.4	3893	733	1.43
	0.6	3791	776	1.51
	0.8	3707	816	1.59
	1	3604	863	1.68
	1.2	3495	909	1.77
	1.4	3390	955	1.86
T6	0.2	3450	621	0.92
	0.4	3328	672	0.99
	0.6	3213	723	1.07
	0.8	3094	773	1.14
	1	2961	826	1.22
	1.2	2833	876	1.30
	1.4	2714	920	1.36
T7	0.2	3651	647	1.06
	0.4	3534	694	1.14
	0.6	3425	741	1.22
	0.8	3321	788	1.29
	1	3201	838	1.37
	1.2	3080	887	1.45
	1.4	2966	932	1.53
T8	0.2	3791	664	1.17
	0.4	3678	709	1.25
	0.6	3571	755	1.33
	0.8	3477	798	1.40
	1	3364	847	1.49
	1.2	3248	895	1.57
	1.4	3138	940	1.65
T9	0.2	3914	680	1.27
	0.4	3804	723	1.35
	0.6	3700	767	1.43
	0.8	3612	809	1.51
	1	3506	856	1.60
	1.2	3393	903	1.69
	1.4	3286	949	1.77
T10	0.2	4002	691	1.35
	0.4	3893	733	1.43
	0.6	3791	776	1.51
	0.8	3707	816	1.59
	1	3604	863	1.68
	1.2	3495	909	1.77
	1.4	3390	955	1.86

Horizontal Flow				
Speed Tap	ESP	CFM	RPM	BHP
T1**	0.2	2220	492	0.31
	0.4	2111	559	0.35
	0.6	1955	632	0.40
	0.8	-	-	-
	1	-	-	-
	1.2	-	-	-
	1.4	-	-	-
T2**	0.2	2419	521	0.40
	0.4	2310	584	0.44
	0.6	2166	651	0.50
	0.8	1919	729	0.56
	1	1736	795	0.61
	1.2	-	-	-
	1.4	-	-	-
T3	0.2	3504	678	1.06
	0.4	3401	721	1.12
	0.6	3312	764	1.19
	0.8	3233	808	1.26
	1	3125	857	1.34
	1.2	3024	902	1.41
	1.4	2849	963	1.50
T4	0.2	3853	729	1.36
	0.4	3755	767	1.43
	0.6	3679	805	1.50
	0.8	3629	841	1.57
	1	3539	885	1.65
	1.2	3449	928	1.73
	1.4	3296	985	1.84
T5	0.2	3938	741	1.44
	0.4	3842	779	1.52
	0.6	3768	816	1.59
	0.8	3722	850	1.66
	1	3635	893	1.74
	1.2	3548	935	1.82
	1.4	3401	991	1.93
T6	0.2	3406	664	0.98
	0.4	3302	708	1.05
	0.6	3209	753	1.11
	0.8	3119	799	1.18
	1	3005	850	1.26
	1.2	2900	896	1.32
	1.4	2722	957	1.41
T7	0.2	3599	692	1.13
	0.4	3497	734	1.20
	0.6	3412	775	1.27
	0.8	3343	816	1.34
	1	3240	864	1.42
	1.2	3142	908	1.49
	1.4	2972	969	1.59
T8	0.2	3734	711	1.25
	0.4	3634	751	1.32
	0.6	3554	791	1.39
	0.8	3496	829	1.46
	1	3400	875	1.54
	1.2	3307	918	1.61
	1.4	3145	977	1.72
T9	0.2	3853	729	1.36
	0.4	3755	767	1.43
	0.6	3679	805	1.50
	0.8	3629	841	1.57
	1	3539	885	1.65
	1.2	3449	928	1.73
	1.4	3296	985	1.84
T10	0.2	3938	741	1.44
	0.4	3842	779	1.52
	0.6	3768	816	1.59
	0.8	3722	850	1.66
	1	3635	893	1.74
	1.2	3548	935	1.82
	1.4	3401	991	1.93

Shaded speed tap - Airflow for supplimental heat.
** (T1) and (T2) are part load only

8.5 Ton Cooler • High Static Direct Drive • Models: DSC1023W, DSC1024W, DSC1027W

Down Flow				
Speed Tap	ESP	CFM	RPM	BHP
T1**	0.2	2349	487	0.35
	0.4	2188	559	0.40
	0.6	2036	630	0.45
	0.8	1791	713	0.51
	1	-	-	-
	1.2	-	-	-
	1.4	-	-	-
	1.6	-	-	-
	1.8	-	-	-
T2**	0.2	2553	512	0.43
	0.4	2400	579	0.49
	0.6	2256	646	0.55
	0.8	2038	723	0.61
	1	1833	786	0.67
	1.2	-	-	-
	1.4	-	-	-
	1.6	-	-	-
	1.8	-	-	-
T3	0.2	3724	656	1.12
	0.4	3610	702	1.19
	0.6	3502	748	1.27
	0.8	3403	793	1.35
	1	3287	843	1.43
	1.2	3169	891	1.52
	1.4	3057	936	1.59
	1.6	2843	991	1.69
	1.8	2732	1041	1.77
T4	0.2	4163	712	1.50
	0.4	4058	752	1.58
	0.6	3957	793	1.67
	0.8	3878	832	1.75
	1	3781	876	1.84
	1.2	3677	921	1.94
	1.4	3576	966	2.03
	1.6	3396	1004	2.11
	1.8	3320	1053	2.22
T5	0.2	4233	721	1.57
	0.4	4129	761	1.66
	0.6	4029	801	1.74
	0.8	3951	839	1.82
	1	3856	882	1.92
	1.2	3754	926	2.02
	1.4	3654	971	2.11
	1.6	3482	1008	2.19
	1.8	3408	1055	2.30

Horizontal Flow				
Speed Tap	ESP	CFM	RPM	BHP
T1**	0.2	2353	511	0.37
	0.4	2245	575	0.41
	0.6	2096	645	0.46
	0.8	1837	725	0.52
	1	-	-	-
	1.2	-	-	-
	1.4	-	-	-
	1.6	-	-	-
	1.8	-	-	-
T2**	0.2	2548	539	0.46
	0.4	2439	599	0.51
	0.6	2302	664	0.56
	0.8	2080	737	0.62
	1	1907	801	0.68
	1.2	1760	851	0.72
	1.4	-	-	-
	1.6	-	-	-
	1.8	-	-	-
T3	0.2	3670	702	1.19
	0.4	3569	743	1.26
	0.6	3487	784	1.33
	0.8	3423	823	1.40
	1	3324	869	1.48
	1.2	3229	913	1.55
	1.4	3064	973	1.66
	1.6	2945	1019	1.73
	1.8	2817	1062	1.81
T4	0.2	4095	764	1.61
	0.4	4002	800	1.68
	0.6	3933	836	1.76
	0.8	3890	869	1.83
	1	3810	909	1.91
	1.2	3726	949	2.00
	1.4	3593	1002	2.11
	1.6	3488	1045	2.20
	1.8	3404	1077	2.27
T5	0.2	4163	774	1.68
	0.4	4072	810	1.76
	0.6	4004	845	1.84
	0.8	3961	877	1.91
	1	3884	916	1.99
	1.2	3800	956	2.08
	1.4	3675	1007	2.19
	1.6	3572	1049	2.28
	1.8	3492	1080	2.35

8.5 Ton Cooler • High Static Direct Drive • Models: DSC1023W, DSC1024W, DSC1027W

Down Flow				
Speed Tap	ESP	CFM	RPM	BHP
T6	0.2	3656	647	1.06
	0.4	3540	694	1.14
	0.6	3431	742	1.22
	0.8	3327	788	1.30
	1	3207	839	1.38
	1.2	3087	887	1.46
	1.4	2973	932	1.53
	1.6	2755	991	1.63
	1.8	2637	1040	1.71
T7	0.2	3840	670	1.21
	0.4	3728	715	1.29
	0.6	3622	760	1.37
	0.8	3531	802	1.45
	1	3421	851	1.53
	1.2	3306	898	1.62
	1.4	3197	944	1.70
	1.6	2990	993	1.79
	1.8	2891	1043	1.88
T8	0.2	3966	686	1.31
	0.4	3857	729	1.40
	0.6	3754	772	1.48
	0.8	3668	813	1.56
	1	3564	860	1.65
	1.2	3454	906	1.74
	1.4	3348	952	1.82
	1.6	3150	997	1.91
	1.8	3062	1046	2.00
T9	0.2	4163	712	1.50
	0.4	4058	752	1.58
	0.6	3957	793	1.67
	0.8	3878	832	1.75
	1	3781	876	1.84
	1.2	3677	921	1.94
	1.4	3576	966	2.03
	1.6	3396	1004	2.11
	1.8	3320	1053	2.22
T10	0.2	4233	721	1.57
	0.4	4129	761	1.66
	0.6	4029	801	1.74
	0.8	3951	839	1.82
	1	3856	882	1.92
	1.2	3754	926	2.02
	1.4	3654	971	2.11
	1.6	3482	1008	2.19
	1.8	3408	1055	2.30

Horizontal Flow				
Speed Tap	ESP	CFM	RPM	BHP
T6	0.2	3605	693	1.14
	0.4	3503	734	1.21
	0.6	3418	776	1.28
	0.8	3349	817	1.34
	1	3246	864	1.42
	1.2	3149	909	1.49
	1.4	2980	969	1.59
	1.6	2860	1015	1.67
	1.8	2722	1061	1.74
T7	0.2	3781	718	1.29
	0.4	3682	758	1.36
	0.6	3604	797	1.43
	0.8	3549	834	1.50
	1	3455	879	1.58
	1.2	3364	922	1.66
	1.4	3205	980	1.77
	1.6	3090	1026	1.85
	1.8	2975	1065	1.92
T8	0.2	3903	736	1.41
	0.4	3806	774	1.48
	0.6	3732	812	1.55
	0.8	3684	847	1.62
	1	3596	890	1.70
	1.2	3508	932	1.78
	1.4	3358	988	1.89
	1.6	3246	1034	1.98
	1.8	3146	1069	2.05
T9	0.2	4095	764	1.61
	0.4	4002	800	1.68
	0.6	3933	836	1.76
	0.8	3890	869	1.83
	1	3810	909	1.91
	1.2	3726	949	2.00
	1.4	3593	1002	2.11
	1.6	3488	1045	2.20
	1.8	3404	1077	2.27
T10	0.2	4163	774	1.68
	0.4	4072	810	1.76
	0.6	4004	845	1.84
	0.8	3961	877	1.91
	1	3884	916	1.99
	1.2	3800	956	2.08
	1.4	3675	1007	2.19
	1.6	3572	1049	2.28
	1.8	3492	1080	2.35

Shaded speed tap - Airflow for supplimental heat.
** (T1) and (T2) are part load only

10 Ton Cooler • Standard Static Direct Drive • Models: DSC1203D, DSC1204D, DSC1207D

Down Flow				
Speed Tap	ESP	CFM	RPM	BHP
T1**	0.2	2154	434	0.24
	0.4	-	-	-
	0.6	-	-	-
	0.8	-	-	-
T2**	0.2	2471	467	0.34
	0.4	2293	546	0.40
	0.6	-	-	-
	0.8	-	-	-
T3	0.2	3558	579	0.85
	0.4	3437	642	0.94
	0.6	3284	702	1.03
	0.8	3163	755	1.11
T4	0.2	4203	647	1.29
	0.4	4100	701	1.39
	0.6	4010	746	1.48
	0.8	3903	796	1.58
T5	0.2	4308	659	1.37
	0.4	4207	711	1.48
	0.6	4122	755	1.57
	0.8	4015	804	1.67
T6	0.2	3720	596	0.95
	0.4	3606	656	1.04
	0.6	3473	712	1.13
	0.8	3357	764	1.21
T7	0.2	3992	625	0.99
	0.4	3886	681	1.08
	0.6	3781	730	1.16
	0.8	3671	782	1.24
T8	0.2	4192	646	1.28
	0.4	4090	700	1.38
	0.6	3999	745	1.47
	0.8	3891	795	1.57
T9	0.2	4203	647	1.29
	0.4	4100	701	1.39
	0.6	4010	746	1.48
	0.8	3903	796	1.58
T10	0.2	4308	659	1.37
	0.4	4207	711	1.48
	0.6	4122	755	1.57
	0.8	4015	804	1.67

Horizontal Flow				
Speed Tap	ESP	CFM	RPM	BHP
T1**	0.2	2099	440	0.24
	0.4	-	-	-
	0.6	-	-	-
	0.8	-	-	-
T2**	0.2	2397	475	0.35
	0.4	2148	578	0.42
	0.6	-	-	-
	0.8	-	-	-
T3	0.2	3419	596	0.87
	0.4	3306	652	0.95
	0.6	3143	717	1.05
	0.8	3020	766	1.12
T4	0.2	4026	671	1.33
	0.4	3950	710	1.41
	0.6	3823	764	1.52
	0.8	3713	809	1.61
T5	0.2	4125	683	1.42
	0.4	4051	721	1.50
	0.6	3927	773	1.61
	0.8	3818	817	1.70
T6	0.2	3572	615	0.98
	0.4	3472	665	1.06
	0.6	3319	728	1.15
	0.8	3201	776	1.23
T7	0.2	3828	646	1.03
	0.4	3745	690	1.09
	0.6	3607	747	1.19
	0.8	3495	794	1.26
T8	0.2	4016	669	1.32
	0.4	3940	709	1.40
	0.6	3812	763	1.51
	0.8	3702	808	1.60
T9	0.2	4026	671	1.33
	0.4	3950	710	1.41
	0.6	3823	764	1.52
	0.8	3713	809	1.61
T10	0.2	4125	683	1.42
	0.4	4051	721	1.50
	0.6	3927	773	1.61
	0.8	3818	817	1.70

Shaded speed tap - Airflow for supplimental heat.
** (T1) and (T2) are part load only

10 Ton Cooler • Medium Static Direct Drive • Models: DSC1203L, DSC1204L, DSC1207L

Down Flow				
Speed Tap	ESP	CFM	RPM	BHP
T1**	0.2	2471	467	0.34
	0.4	2293	546	0.40
	0.6	-	-	-
	0.8	-	-	-
	1	-	-	-
	1.2	-	-	-
	1.4	-	-	-
T2**	0.2	2789	499	0.46
	0.4	2630	574	0.53
	0.6	2351	663	0.61
	0.8	2195	717	0.66
	1	-	-	-
	1.2	-	-	-
	1.4	-	-	-
T3	0.2	3865	611	1.02
	0.4	3755	669	1.12
	0.6	3637	721	1.20
	0.8	3525	773	1.29
	1	3322	842	1.41
	1.2	3193	893	1.49
	1.4	2945	965	1.61
T4	0.2	4556	686	1.56
	0.4	4456	734	1.67
	0.6	4374	777	1.77
	0.8	4265	824	1.87
	1	4121	879	2.00
	1.2	4013	926	2.10
	1.4	3807	987	2.24
T5	0.2	4738	706	1.74
	0.4	4636	752	1.85
	0.6	4547	796	1.96
	0.8	4434	841	2.07
	1	4311	889	2.19
	1.2	4201	934	2.30
	1.4	4020	987	2.43
T6	0.2	4203	647	1.26
	0.4	4100	701	1.37
	0.6	4010	746	1.45
	0.8	3903	796	1.55
	1	3725	860	1.68
	1.2	3611	909	1.77
	1.4	3375	979	1.91
T7	0.2	4360	664	1.39
	0.4	4259	715	1.49
	0.6	4175	759	1.59
	0.8	4068	808	1.69
	1	3905	869	1.81
	1.2	3795	916	1.91
	1.4	3569	984	2.05
T8	0.2	4460	675	1.47
	0.4	4360	725	1.58
	0.6	4278	768	1.68
	0.8	4170	816	1.78
	1	4016	874	1.91
	1.2	3908	921	2.01
	1.4	3691	986	2.15
T9	0.2	4556	686	1.56
	0.4	4456	734	1.67
	0.6	4374	777	1.77
	0.8	4265	824	1.87
	1	4121	879	2.00
	1.2	4013	926	2.10
	1.4	3807	987	2.24
T10	0.2	4738	706	1.74
	0.4	4636	752	1.85
	0.6	4547	796	1.96
	0.8	4434	841	2.07
	1	4311	889	2.19
	1.2	4201	934	2.30
	1.4	4020	987	2.43

Horizontal Flow				
Speed Tap	ESP	CFM	RPM	BHP
T1**	0.2	2397	475	0.34
	0.4	2148	578	0.42
	0.6	-	-	-
	0.8	-	-	-
	1	-	-	-
	1.2	-	-	-
	1.4	-	-	-
T2**	0.2	2696	510	0.47
	0.4	2493	597	0.55
	0.6	2272	674	0.62
	0.8	2116	726	0.67
	1	-	-	-
	1.2	-	-	-
	1.4	-	-	-
T3	0.2	3707	631	1.05
	0.4	3617	678	1.13
	0.6	3473	738	1.23
	0.8	3359	785	1.31
	1	3125	864	1.44
	1.2	2912	925	1.55
	1.4	2750	974	1.63
T4	0.2	4359	712	1.62
	0.4	4281	749	1.70
	0.6	4164	796	1.81
	0.8	4053	838	1.91
	1	3889	900	2.05
	1.2	3711	955	2.17
	1.4	3593	1003	2.28
T5	0.2	4530	734	1.81
	0.4	4442	772	1.90
	0.6	4328	815	2.01
	0.8	4213	855	2.10
	1	4078	908	2.23
	1.2	3914	961	2.36
	1.4	3807	1007	2.48
T6	0.2	4026	671	1.31
	0.4	3950	710	1.38
	0.6	3823	764	1.49
	0.8	3713	809	1.58
	1	3507	882	1.72
	1.2	3308	941	1.83
	1.4	3167	990	1.93
T7	0.2	4173	689	1.44
	0.4	4099	727	1.52
	0.6	3978	777	1.62
	0.8	3868	821	1.72
	1	3679	890	1.86
	1.2	3489	947	1.98
	1.4	3357	997	2.08
T8	0.2	4268	701	1.53
	0.4	4192	738	1.61
	0.6	4074	787	1.72
	0.8	3964	829	1.81
	1	3787	895	1.95
	1.2	3603	951	2.08
	1.4	3478	1000	2.18
T9	0.2	4359	712	1.62
	0.4	4281	749	1.70
	0.6	4164	796	1.81
	0.8	4053	838	1.91
	1	3889	900	2.05
	1.2	3711	955	2.17
	1.4	3593	1003	2.28
T10	0.2	4530	734	1.81
	0.4	4442	772	1.90
	0.6	4328	815	2.01
	0.8	4213	855	2.10
	1	4078	908	2.23
	1.2	3914	961	2.36
	1.4	3807	1007	2.48

Shaded speed tap - Airflow for supplimental heat.
** (T1) and (T2) are part load only

10 Ton Cooler • High Static Direct Drive • Models: DSC1203W, DSC1204W, DSC1207W

Down Flow				
Speed Tap	ESP	CFM	RPM	BHP
T1**	0.2	2587	478	0.38
	0.4	2415	556	0.44
	0.6	2097	654	0.52
	0.8	-	-	-
	1	-	-	-
	1.2	-	-	-
	1.4	-	-	-
	1.6	-	-	-
	1.8	-	-	-
T2**	0.2	2877	508	0.50
	0.4	2723	581	0.57
	0.6	2460	667	0.65
	0.8	2309	721	0.70
	1	2054	793	0.77
	1.2	-	-	-
	1.4	-	-	-
	1.6	-	-	-
	1.8	-	-	-
T3	0.2	3998	625	1.11
	0.4	3892	682	1.21
	0.6	3787	730	1.30
	0.8	3677	782	1.39
	1	3483	849	1.51
	1.2	3361	899	1.60
	1.4	3117	972	1.73
	1.6	2989	1014	1.80
	1.8	2684	1082	1.92
T4	0.2	4824	715	1.83
	0.4	4719	761	1.94
	0.6	4625	806	2.06
	0.8	4508	849	2.17
	1	4396	894	2.28
	1.2	4284	937	2.39
	1.4	4117	985	2.52
	1.6	4008	1028	2.62
	1.8	3799	1085	2.77
T5	0.2	4950	730	1.97
	0.4	4840	774	2.09
	0.6	4732	821	2.21
	0.8	4609	863	2.33
	1	4515	901	2.43
	1.2	4398	943	2.54
	1.4	4256	982	2.65
	1.6	4147	1025	2.76
	1.8	4001	1075	2.90

Horizontal Flow				
Speed Tap	ESP	CFM	RPM	BHP
T1**	0.2	2506	488	0.39
	0.4	2274	585	0.46
	0.6	2035	664	0.53
	0.8	-	-	-
	1	-	-	-
	1.2	-	-	-
	1.4	-	-	-
	1.6	-	-	-
	1.8	-	-	-
T2**	0.2	2778	520	0.51
	0.4	2588	603	0.59
	0.6	2374	678	0.66
	0.8	2222	731	0.71
	1	-	-	-
	1.2	-	-	-
	1.4	-	-	-
	1.6	-	-	-
	1.8	-	-	-
T3	0.2	3833	647	1.15
	0.4	3750	690	1.23
	0.6	3613	747	1.33
	0.8	3501	794	1.41
	1	3277	871	1.55
	1.2	3070	932	1.66
	1.4	2915	981	1.74
	1.6	2633	1046	1.86
	1.8	2422	1092	1.94
T4	0.2	4611	744	1.90
	0.4	4515	784	2.00
	0.6	4401	825	2.11
	0.8	4283	864	2.20
	1	4163	912	2.33
	1.2	4007	963	2.46
	1.4	3907	1009	2.57
	1.6	3680	1059	2.70
	1.8	3495	1113	2.84
T5	0.2	4729	760	2.05
	0.4	4618	803	2.16
	0.6	4503	841	2.27
	0.8	4379	878	2.37
	1	4285	917	2.47
	1.2	4142	967	2.61
	1.4	4050	1010	2.72
	1.6	3854	1053	2.84
	1.8	3679	1109	2.99

10 Ton Cooler • High Static Direct Drive • Models: DSC1203W, DSC1204W, DSC1207W

Down Flow				
Speed Tap	ESP	CFM	RPM	BHP
T6	0.2	3876	612	1.03
	0.4	3767	670	1.13
	0.6	3651	722	1.21
	0.8	3539	774	1.30
	1	3336	843	1.42
	1.2	3208	893	1.50
	1.4	2960	966	1.62
	1.6	2828	1008	1.69
	1.8	2541	1075	1.81
T7	0.2	4094	636	1.18
	0.4	3989	690	1.28
	0.6	3892	738	1.37
	0.8	3784	788	1.46
	1	3597	854	1.59
	1.2	3479	904	1.68
	1.4	3238	976	1.81
	1.6	3113	1018	1.89
	1.8	2800	1087	2.02
T8	0.2	4277	655	1.32
	0.4	4176	708	1.43
	0.6	4089	752	1.51
	0.8	3982	802	1.61
	1	3811	864	1.74
	1.2	3699	913	1.84
	1.4	3468	982	1.98
	1.6	3348	1024	2.06
	1.8	3029	1094	2.20
T9	0.2	4824	715	1.83
	0.4	4719	761	1.94
	0.6	4625	806	2.06
	0.8	4508	849	2.17
	1	4396	894	2.28
	1.2	4284	937	2.39
	1.4	4117	985	2.52
	1.6	4008	1028	2.62
	1.8	3799	1085	2.77
T10	0.2	4950	730	1.97
	0.4	4840	774	2.09
	0.6	4732	821	2.21
	0.8	4609	863	2.33
	1	4515	901	2.43
	1.2	4398	943	2.54
	1.4	4256	982	2.65
	1.6	4147	1025	2.76
	1.8	4001	1075	2.90

Horizontal Flow				
Speed Tap	ESP	CFM	RPM	BHP
T6	0.2	3719	633	1.06
	0.4	3629	679	1.14
	0.6	3486	738	1.24
	0.8	3371	786	1.32
	1	3138	864	1.45
	1.2	2926	926	1.56
	1.4	2764	975	1.64
	1.6	2489	1039	1.75
	1.8	2277	1083	1.82
T7	0.2	3923	658	1.22
	0.4	3844	699	1.30
	0.6	3712	755	1.40
	0.8	3601	801	1.49
	1	3385	876	1.63
	1.2	3181	936	1.74
	1.4	3033	986	1.83
	1.6	2749	1051	1.95
	1.8	2538	1097	2.04
T8	0.2	4096	679	1.37
	0.4	4021	718	1.45
	0.6	3897	770	1.55
	0.8	3787	815	1.64
	1	3589	886	1.78
	1.2	3394	944	1.90
	1.4	3257	994	2.00
	1.6	2973	1058	2.13
	1.8	2765	1106	2.23
T9	0.2	4611	744	1.90
	0.4	4515	784	2.00
	0.6	4401	825	2.11
	0.8	4283	864	2.20
	1	4163	912	2.33
	1.2	4007	963	2.46
	1.4	3907	1009	2.57
	1.6	3680	1059	2.70
	1.8	3495	1113	2.84
T10	0.2	4729	760	2.05
	0.4	4618	803	2.16
	0.6	4503	841	2.27
	0.8	4379	878	2.37
	1	4285	917	2.47
	1.2	4142	967	2.61
	1.4	4050	1010	2.72
	1.6	3854	1053	2.84
	1.8	3679	1109	2.99

Shaded speed tap - Airflow for supplimental heat.
** (T1) and (T2) are part load only

12.5 Ton Cooler • Standard Static Direct Drive • Models: DSC1503D, DSC1504D, DSC1507D

Down Flow				
Speed Tap	**ESP**	**CFM**	**RPM**	**BHP**
T1**	0.2	2158	454	0.25
	0.4	1860	565	0.31
	0.6	1532	657	0.37
	0.8	1323	710	0.40
T2**	0.2	2501	491	0.37
	0.4	2253	586	0.44
	0.6	1977	669	0.51
	0.8	1761	729	0.55
T3	0.2	4373	700	1.49
	0.4	4292	740	1.58
	0.6	4200	787	1.68
	0.8	4047	845	1.80
T4	0.2	4883	761	2.05
	0.4	4781	809	2.18
	0.6	4676	849	2.29
	0.8	4601	886	2.39
T5	0.2	4954	770	2.14
	0.4	4843	821	2.29
	0.6	4732	861	2.40
	0.8	4673	893	2.49
T6	0.2	4373	700	1.49
	0.4	4292	740	1.58
	0.6	4200	787	1.68
	0.8	4047	845	1.80
T7	0.2	4603	727	1.55
	0.4	4519	768	1.64
	0.6	4428	812	1.73
	0.8	4304	863	1.84
T8	0.2	4729	742	1.86
	0.4	4639	785	1.97
	0.6	4544	827	2.07
	0.8	4440	873	2.19
T9	0.2	4883	761	2.05
	0.4	4781	809	2.18
	0.6	4676	849	2.29
	0.8	4601	886	2.39
T10	0.2	4954	770	2.14
	0.4	4843	821	2.29
	0.6	4732	861	2.40
	0.8	4673	893	2.49

Horizontal Flow				
Speed Tap	**ESP**	**CFM**	**RPM**	**BHP**
T1**	0.2	2124	462	0.26
	0.4	1926	534	0.30
	0.6	1609	625	0.35
	0.8	1383	692	0.39
T2**	0.2	2447	503	0.38
	0.4	2275	570	0.43
	0.6	2010	650	0.49
	0.8	1810	713	0.54
T3	0.2	4258	736	1.57
	0.4	4177	777	1.66
	0.6	4103	816	1.74
	0.8	4012	858	1.83
T4	0.2	4784	805	2.17
	0.4	4697	842	2.27
	0.6	4614	881	2.37
	0.8	4532	920	2.48
T5	0.2	4860	815	2.27
	0.4	4769	851	2.37
	0.6	4681	892	2.48
	0.8	4598	930	2.59
T6	0.2	4258	736	1.57
	0.4	4177	777	1.66
	0.6	4103	816	1.74
	0.8	4012	858	1.83
T7	0.2	4492	766	1.64
	0.4	4411	805	1.72
	0.6	4339	843	1.80
	0.8	4255	884	1.89
T8	0.2	4622	783	1.96
	0.4	4540	821	2.06
	0.6	4465	860	2.15
	0.8	4383	899	2.25
T9	0.2	4784	805	2.17
	0.4	4697	842	2.27
	0.6	4614	881	2.37
	0.8	4532	920	2.48
T10	0.2	4860	815	2.27
	0.4	4769	851	2.37
	0.6	4681	892	2.48
	0.8	4598	930	2.59

Shaded speed tap - Airflow for supplimental heat.
** (T1) and (T2) are part load only

12.5 Ton Cooler • Medium Static Direct Drive • Models: DSC1503L, DSC1504L, DSC1507L

Down Flow				
Speed Tap	ESP	CFM	RPM	BHP
T1**	0.2	2543	483	0.39
	0.4	2344	561	0.45
	0.6	2082	653	0.53
	0.8	1822	727	0.59
	1	1632	773	0.63
	1.2	1380	832	0.67
	1.4	-	-	-
T2**	0.2	2845	517	0.50
	0.4	2659	589	0.57
	0.6	2425	673	0.65
	0.8	2185	743	0.72
	1	2004	790	0.77
	1.2	1758	849	0.83
	1.4	1539	892	0.87
T3	0.2	4522	709	1.46
	0.4	4400	754	1.55
	0.6	4295	799	1.64
	0.8	4158	848	1.74
	1	4026	895	1.84
	1.2	3826	952	1.96
	1.4	3671	996	2.05
T4	0.2	5513	828	2.46
	0.4	5418	863	2.57
	0.6	5346	896	2.66
	0.8	5253	935	2.78
	1	5153	978	2.90
	1.2	5005	1025	3.04
	1.4	4883	1066	3.17
T5	0.2	5616	841	2.60
	0.4	5522	876	2.71
	0.6	5450	909	2.81
	0.8	5359	947	2.93
	1	5263	988	3.06
	1.2	5122	1033	3.20
	1.4	5004	1074	3.32
T6	0.2	4881	751	1.76
	0.4	4769	792	1.86
	0.6	4683	831	1.95
	0.8	4564	876	2.06
	1	4444	922	2.16
	1.2	4258	976	2.29
	1.4	4116	1020	2.39
T7	0.2	5215	791	2.10
	0.4	5113	828	2.20
	0.6	5038	864	2.29
	0.8	4934	905	2.40
	1	4824	950	2.52
	1.2	4656	1001	2.66
	1.4	4525	1044	2.77
T8	0.2	5413	816	2.33
	0.4	5315	851	2.43
	0.6	5244	885	2.53
	0.8	5147	925	2.64
	1	5044	968	2.77
	1.2	4888	1016	2.91
	1.4	4763	1058	3.03
T9	0.2	5513	828	2.46
	0.4	5418	863	2.57
	0.6	5346	896	2.66
	0.8	5253	935	2.78
	1	5153	978	2.90
	1.2	5005	1025	3.04
	1.4	4883	1066	3.17
T10	0.2	5616	841	2.60
	0.4	5522	876	2.71
	0.6	5450	909	2.81
	0.8	5359	947	2.93
	1	5263	988	3.06
	1.2	5122	1033	3.20
	1.4	5004	1074	3.32

Horizontal Flow				
Speed Tap	ESP	CFM	RPM	BHP
T1**	0.2	2460	510	0.41
	0.4	2228	602	0.49
	0.6	1972	687	0.56
	0.8	1804	742	0.60
	1	1610	797	0.64
	1.2	1395	852	0.69
	1.4	1313	904	0.73
T2**	0.2	2748	548	0.53
	0.4	2543	631	0.61
	0.6	2311	709	0.69
	0.8	2155	762	0.74
	1	1963	817	0.79
	1.2	1763	871	0.85
	1.4	1659	924	0.90
T3	0.2	4351	764	1.57
	0.4	4266	804	1.65
	0.6	4152	847	1.74
	0.8	4053	889	1.83
	1	3893	942	1.93
	1.2	3772	986	2.03
	1.4	3591	1039	2.13
T4	0.2	5302	897	2.67
	0.4	5246	924	2.75
	0.6	5177	956	2.84
	0.8	5099	991	2.94
	1	4987	1033	3.07
	1.2	4904	1069	3.18
	1.4	4750	1113	3.31
T5	0.2	5401	912	2.82
	0.4	5343	939	2.90
	0.6	5277	970	3.00
	0.8	5200	1004	3.11
	1	5096	1044	3.23
	1.2	5016	1079	3.34
	1.4	4872	1121	3.47
T6	0.2	4695	811	1.90
	0.4	4626	845	1.98
	0.6	4532	883	2.07
	0.8	4442	922	2.16
	1	4296	972	2.28
	1.2	4189	1014	2.38
	1.4	4008	1065	2.50
T7	0.2	5015	856	2.27
	0.4	4956	885	2.35
	0.6	4878	919	2.44
	0.8	4795	956	2.54
	1	4665	1003	2.66
	1.2	4571	1042	2.76
	1.4	4398	1090	2.89
T8	0.2	5205	883	2.53
	0.4	5149	911	2.60
	0.6	5078	943	2.70
	0.8	4998	978	2.80
	1	4879	1022	2.92
	1.2	4793	1059	3.03
	1.4	4631	1105	3.16
T9	0.2	5302	897	2.67
	0.4	5246	924	2.75
	0.6	5177	956	2.84
	0.8	5099	991	2.94
	1	4987	1033	3.07
	1.2	4904	1069	3.18
	1.4	4750	1113	3.31
T10	0.2	5401	912	2.82
	0.4	5343	939	2.90
	0.6	5277	970	3.00
	0.8	5200	1004	3.11
	1	5096	1044	3.23
	1.2	5016	1079	3.34
	1.4	4872	1121	3.47

Shaded speed tap - Airflow for supplimental heat.
** (T1) and (T2) are part load only

12.5 Ton Cooler • High Static Direct Drive • Models: Models: DSC1503W, DSC1504W, DSC1507W

Down Flow				
Speed Tap	ESP	CFM	RPM	BHP
T1**	0.2	2752	506	0.47
	0.4	2562	580	0.53
	0.6	-	-	-
	0.8	-	-	-
	1	-	-	-
	1.2	-	-	-
	1.4	-	-	-
	1.6	-	-	-
	1.8	-	-	-
T2**	0.2	2983	532	0.56
	0.4	2802	602	0.63
	0.6	2580	682	0.72
	0.8	-	-	-
	1	-	-	-
	1.2	-	-	-
	1.4	-	-	-
	1.6	-	-	-
	1.8	-	-	-
T3	0.2	4898	753	1.78
	0.4	4788	793	1.87
	0.6	4702	832	1.97
	0.8	4584	877	2.07
	1	4464	923	2.18
	1.2	4280	978	2.31
	1.4	4138	1021	2.41
	1.6	3912	1078	2.55
	1.8	3739	1115	2.63
T4	0.2	5749	859	2.81
	0.4	5658	893	2.92
	0.6	5582	926	3.03
	0.8	5494	963	3.15
	1	5402	1003	3.28
	1.2	5273	1045	3.42
	1.4	5158	1085	3.55
	1.6	5003	1130	3.69
	1.8	4866	1160	3.79
T5	0.2	5849	872	2.97
	0.4	5757	906	3.09
	0.6	5677	940	3.21
	0.8	5591	977	3.33
	1	5502	1015	3.46
	1.2	5383	1055	3.60
	1.4	5270	1093	3.73
	1.6	5132	1135	3.87
	1.8	5003	1167	3.98

Horizontal Flow				
Speed Tap	ESP	CFM	RPM	BHP
T1**	0.2	2659	536	0.49
	0.4	-	-	-
	0.6	-	-	-
	0.8	-	-	-
	1	-	-	-
	1.2	-	-	-
	1.4	-	-	-
	1.6	-	-	-
	1.8	-	-	-
T2**	0.2	2879	566	0.59
	0.4	2685	645	0.68
	0.6	-	-	-
	0.8	-	-	-
	1	-	-	-
	1.2	-	-	-
	1.4	-	-	-
	1.6	-	-	-
	1.8	-	-	-
T3	0.2	4712	813	1.92
	0.4	4643	847	2.00
	0.6	4551	885	2.09
	0.8	4461	924	2.18
	1	4315	974	2.30
	1.2	4210	1015	2.40
	1.4	4028	1066	2.52
	1.6	3884	1109	2.62
	1.8	3675	1166	2.75
T4	0.2	5530	931	3.04
	0.4	5468	958	3.13
	0.6	5403	989	3.23
	0.8	5327	1022	3.34
	1	5234	1059	3.46
	1.2	5158	1092	3.57
	1.4	5032	1132	3.70
	1.6	4929	1166	3.81
	1.8	4764	1212	3.96
T5	0.2	5625	946	3.23
	0.4	5559	974	3.32
	0.6	5494	1005	3.43
	0.8	5417	1037	3.54
	1	5335	1072	3.66
	1.2	5261	1103	3.77
	1.4	5151	1140	3.89
	1.6	5055	1173	4.00
	1.8	4907	1216	4.15

12.5 Ton Cooler • High Static Direct Drive • Models: Models: DSC1503W, DSC1504W, DSC1507W

Down Flow				
Speed Tap	ESP	CFM	RPM	BHP
T6	0.2	5162	785	2.04
	0.4	5059	822	2.14
	0.6	4982	858	2.23
	0.8	4876	900	2.34
	1	4765	945	2.46
	1.2	4594	997	2.59
	1.4	4461	1040	2.71
	1.6	4248	1095	2.85
	1.8	4083	1128	2.93
T7	0.2	5459	822	2.39
	0.4	5363	857	2.49
	0.6	5291	890	2.59
	0.8	5196	929	2.70
	1	5094	972	2.83
	1.2	4942	1020	2.97
	1.4	4818	1062	3.09
	1.6	4628	1113	3.24
	1.8	4475	1143	3.33
T8	0.2	5653	846	2.66
	0.4	5560	880	2.77
	0.6	5487	913	2.87
	0.8	5397	951	2.99
	1	5302	992	3.12
	1.2	5164	1037	3.26
	1.4	5046	1077	3.38
	1.6	4878	1125	3.53
	1.8	4734	1154	3.62
T9	0.2	5749	859	2.81
	0.4	5658	893	2.92
	0.6	5582	926	3.03
	0.8	5494	963	3.15
	1	5402	1003	3.28
	1.2	5273	1045	3.42
	1.4	5158	1085	3.55
	1.6	5003	1130	3.69
	1.8	4866	1160	3.79
T10	0.2	5849	872	2.97
	0.4	5757	906	3.09
	0.6	5677	940	3.21
	0.8	5591	977	3.33
	1	5502	1015	3.46
	1.2	5383	1055	3.60
	1.4	5270	1093	3.73
	1.6	5132	1135	3.87
	1.8	5003	1167	3.98

Horizontal Flow				
Speed Tap	ESP	CFM	RPM	BHP
T6	0.2	4965	849	2.21
	0.4	4905	878	2.29
	0.6	4824	913	2.38
	0.8	4740	951	2.47
	1	4607	998	2.60
	1.2	4512	1037	2.70
	1.4	4337	1086	2.83
	1.6	4204	1126	2.93
	1.8	3995	1181	3.07
T7	0.2	5250	890	2.59
	0.4	5194	917	2.67
	0.6	5124	949	2.76
	0.8	5045	984	2.86
	1	4929	1027	2.99
	1.2	4844	1063	3.09
	1.4	4686	1108	3.23
	1.6	4568	1146	3.34
	1.8	4371	1198	3.49
T8	0.2	5436	917	2.88
	0.4	5378	944	2.96
	0.6	5312	975	3.06
	0.8	5235	1008	3.17
	1	5134	1048	3.29
	1.2	5055	1082	3.40
	1.4	4916	1124	3.53
	1.6	4808	1159	3.64
	1.8	4629	1207	3.79
T9	0.2	5530	931	3.04
	0.4	5468	958	3.13
	0.6	5403	989	3.23
	0.8	5327	1022	3.34
	1	5234	1059	3.46
	1.2	5158	1092	3.57
	1.4	5032	1132	3.70
	1.6	4929	1166	3.81
	1.8	4764	1212	3.96
T10	0.2	5625	946	3.23
	0.4	5559	974	3.32
	0.6	5494	1005	3.43
	0.8	5417	1037	3.54
	1	5335	1072	3.66
	1.2	5261	1103	3.77
	1.4	5151	1140	3.89
	1.6	5055	1173	4.00
	1.8	4907	1216	4.15

Shaded speed tap - Airflow for supplimental heat.
** (T1) and (T2) are part load only

7.5 - 8.5 Ton blower Fan Curve

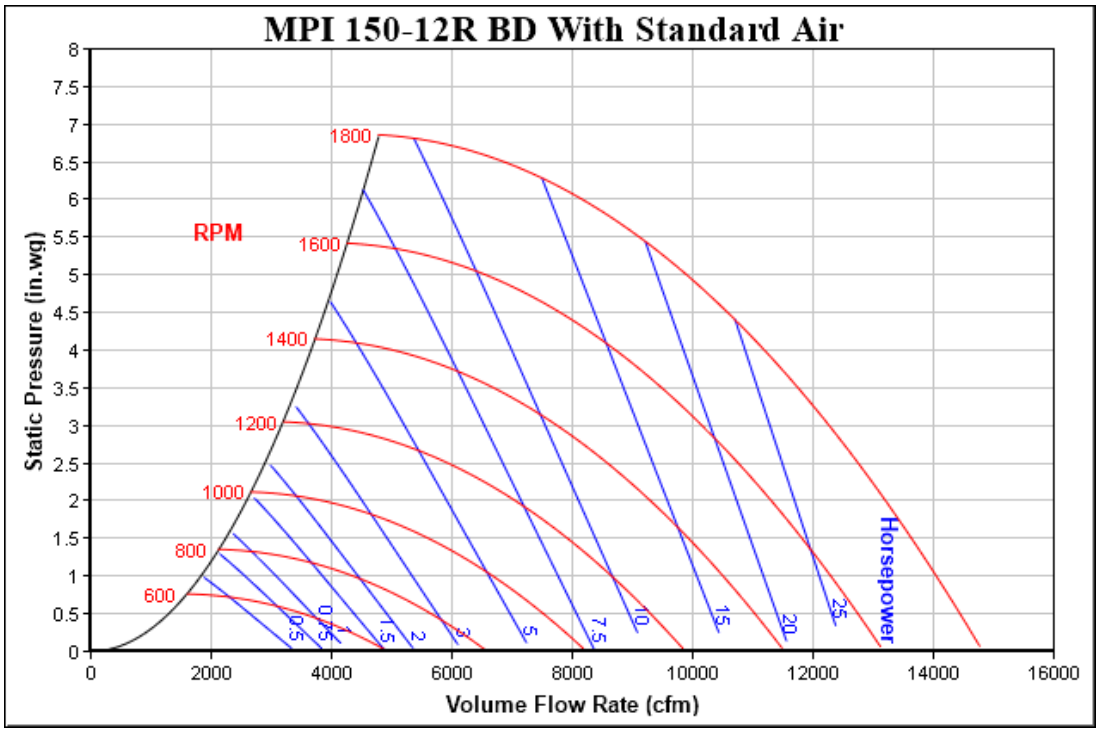

10 - 12.5 Ton blower Fan Curve

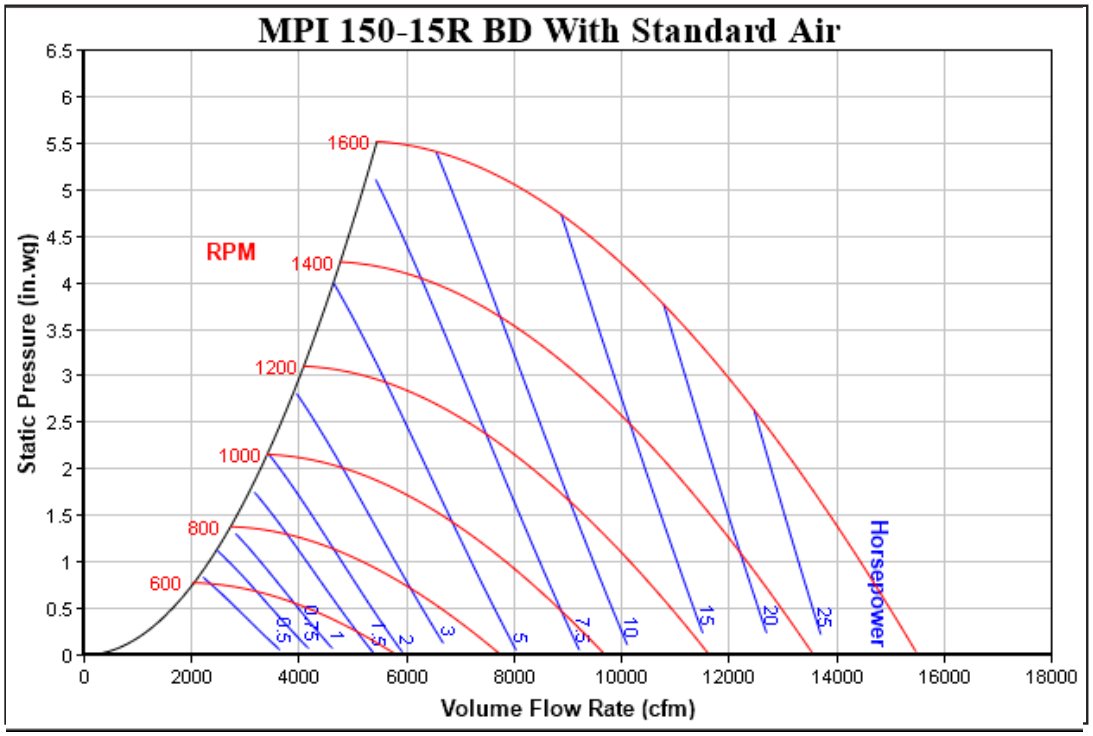

Static Pressure

7.5-12.5 TONS		
DOWNFLOW ECONOMIZER PRESSURE DROP		
Cabinet	CFM	SP in. wg.
7.5 Ton	2250	.04"
	3000	.07"
	3750	.11"
8.5 Ton	2550	.06"
	3400	.10"
	4250	.16"
10 Ton	3000	.08"
	4000	.13"
	5000	.22"
12.5 Ton	3750	.14"
	5000	.24"
	6250	.36"

7.5-12.5 TONS		
HORIZONTAL ECONOMIZER PRESSURE DROP		
Cabinet	CFM	SP in. wg.
7.5 Ton	2250	.05"
	3000	.07"
	3750	.13"
8.5 Ton	2550	.07"
	3400	.13"
	4250	.18"
10 Ton	3000	.07"
	4000	.12"
	5000	.19"
12.5 Ton	3750	.09"
	5000	.15"
	6250	.24"

Electrical Data

Model Number	Electrical Rating	Compressor			Outdoor Fan Motor			Indoor Fan Motor			Optional Electric Heat			Optional Powered Convenience Outlet	Optional Power Exhaust	Power Supply	
		QTY	RLA	LRA	QTY	HP	FLA	TYPE	HP	FLA	PART #	KW*	FLA	FLA	FLA	MCA	MOP
DSC0903D	208/230/3/60	2	12.2	120	2	0.33	2.0	1	2.4	8.0	-	-	-	-	-	39.4/39.4	50/50
											-	-	-	9.6/8.7	-	49.0/48.1	60/60
											-	-	-	-	3.3/3.0 (2.4)	42.7/42.4	50/50
											-	-	-	9.6/8.7	3.3/3.0 (2.4)	52.3/51.1	60/60
											EH*D-3M15	11.3/15.0	31.3/36.1	-	-	49.1/55.1	50/60
														9.6/8.7	-	61.1/66.0	70/70
														-	3.3/3.0 (2.4)	53.2/58.9	60/60
														9.6/8.7	3.3/3.0 (2.4)	65.2/69.7	70/70
											EH*D-3M30	22.5/30.0	62.5/72.2	-	-	88.2/100	90/110
														9.6/8.7	-	100/111	110/125
														-	3.3/3.0 (2.4)	92.3/104	100/110
														9.6/8.7	3.3/3.0 (2.4)	104/115	110/125
											EH*D-3M45	33.8/45.0	93.8/108	-	-	127/145	150/150
														9.6/8.7	-	139/156	150/175
														-	3.3/3.0 (2.4)	131/149	150/150
														9.6/8.7	3.3/3.0 (2.4)	143/160	150/175
DSC0903L	208/230/3/60	2	12.2	120	2	0.33	2.0	1	2.4	8.0	-	-	-	-	-	39.4/39.4	50/50
											-	-	-	9.6/8.7	-	49.0/48.1	60/60
											-	-	-	-	3.3/3.0 (2.4)	42.7/42.4	50/50
											-	-	-	9.6/8.7	3.3/3.0 (2.4)	52.3/51.1	60/60
											EH*D-3M15	11.3/15.0	31.3/36.1	-	-	49.1/55.1	50/60
														9.6/8.7	-	61.1/66.0	70/70
														-	3.3/3.0 (2.4)	53.2/58.9	60/60
														9.6/8.7	3.3/3.0 (2.4)	65.2/69.7	70/70
											EH*D-3M30	22.5/30.0	62.5/72.2	-	-	88.2/100	90/110
														9.6/8.7	-	100/111	110/125
														-	3.3/3.0 (2.4)	92.3/104	100/110
														9.6/8.7	3.3/3.0 (2.4)	104/115	110/125
											EH*D-3M45	33.8/45.0	93.8/108	-	-	127/145	150/150
														9.6/8.7	-	139/156	150/175
														-	3.3/3.0 (2.4)	131/149	150/150
														9.6/8.7	3.3/3.0 (2.4)	143/160	150/175
DSC0903W	208/230/3/60	2	12.2	120	2	0.33	2.0	1	2.4	8.0	-	-	-	-	-	39.4/39.4	50/50
											-	-	-	9.6/8.7	-	49.0/48.1	60/60
											-	-	-	-	3.3/3.0 (2.4)	42.7/42.4	50/50
											-	-	-	9.6/8.7	3.3/3.0 (2.4)	52.3/51.1	60/60
											EH*D-3M15	11.3/15.0	31.3/36.1	-	-	49.1/55.1	50/60
														9.6/8.7	-	61.1/66.0	70/70
														-	3.3/3.0 (2.4)	53.2/58.9	60/60
														9.6/8.7	3.3/3.0 (2.4)	65.2/69.7	70/70
											EH*D-3M30	22.5/30.0	62.5/72.2	-	-	88.2/100	90/110
														9.6/8.7	-	100/111	110/125
														-	3.3/3.0 (2.4)	92.3/104	100/110
														9.6/8.7	3.3/3.0 (2.4)	104/115	110/125
											EH*D-3M45	33.8/45.0	93.8/108	-	-	127/145	150/150
														9.6/8.7	-	139/156	150/175
														-	3.3/3.0 (2.4)	131/149	150/150
														9.6/8.7	3.3/3.0 (2.4)	143/160	150/175
DSC0904D	460/3/60	2	5.8	55.1	2	0.33	0.85	1	2.4	5.4	-	-	-	-	-	20.1	25
											-	-	-	4.3	-	24.4	30
											-	-	-	-	1.2 (1.0)	21.3	25
											-	-	-	4.3	1.2 (1.0)	25.6	30
											EH*D-4M15	15.0	18.0	-	-	29.3	30
														4.3	-	34.7	35
														-	1.2 (1.0)	30.8	35
														4.3	1.2 (1.0)	36.2	40
											EH*D-4M30	30.0	36.1	-	-	51.9	60
														4.3	-	57.2	60
														-	1.2 (1.0)	53.4	60
														4.3	1.2 (1.0)	58.7	60
											EH*D-4M45	45.0	54.1	-	-	74.4	80
														4.3	-	79.8	80
														-	1.2 (1.0)	75.9	80
														4.3	1.2 (1.0)	81.3	90

Electrical Data

Model Number	Electrical Rating	Compressor			Outdoor Fan Motor			Indoor Fan Motor			Optional Electric Heat			Optional Powered Convenience Outlet	Optional Power Exhaust	Power Supply	
		QTY	RLA	LRA	QTY	HP	FLA	TYPE	HP	FLA	PART #	KW*	FLA	FLA	FLA	MCA	MOP
DSC0904L	460/3/60	2	5.8	55.1	2	0.33	0.85	1	2.4	5.4	-	-	-	-	-	20.1	25
											-	-	-	4.3	-	24.4	30
											-	-	-	-	1.2 (1.0)	21.3	25
											-	-	-	4.3	1.2 (1.0)	25.6	30
											EH*D-4M15	15.0	18.0	-	-	29.3	30
														4.3	-	34.7	35
														-	1.2 (1.0)	30.8	35
														4.3	1.2 (1.0)	36.2	40
											EH*D-4M30	30.0	36.1	-	-	51.9	60
														4.3	-	57.2	60
														-	1.2 (1.0)	53.4	60
														4.3	1.2 (1.0)	58.7	60
											EH*D-4M45	45.0	54.1	-	-	74.4	80
														4.3	-	79.8	80
														-	1.2 (1.0)	75.9	80
														4.3	1.2 (1.0)	81.3	90
DSC0904W	460/3/60	2	5.8	55.1	2	0.33	0.85	1	2.4	5.4	-	-	-	-	-	20.1	25
											-	-	-	4.3	-	24.4	30
											-	-	-	-	1.2 (1.0)	21.3	25
											-	-	-	4.3	1.2 (1.0)	25.6	30
											EH*D-4M15	15.0	18.0	-	-	29.3	30
														4.3	-	34.7	35
														-	1.2 (1.0)	30.8	35
														4.3	1.2 (1.0)	36.2	40
											EH*D-4M30	30.0	36.1	-	-	51.9	60
														4.3	-	57.2	60
														-	1.2 (1.0)	53.4	60
														4.3	1.2 (1.0)	58.7	60
											EH*D-4M45	45.0	54.1	-	-	74.4	80
														4.3	-	79.8	80
														-	1.2 (1.0)	75.9	80
														4.3	1.2 (1.0)	81.3	90
DSC0907D	575/3/60	2	5.8	41.0	2	0.33	0.67	1	2.4	4.0	-	-	-	-	-	18.3	20
											-	-	-	3.5	-	21.8	25
											-	-	-	-	1.3	19.6	25
											-	-	-	3.5	1.3	23.1	25
											EH*D-7M15	15.0	14.4	-	-	23.0	25
														3.5	-	27.4	30
														-	1.3	24.7	25
														3.5	1.3	29.0	30
											EH*D-7M30	30.0	28.9	-	-	41.1	45
														3.5	-	45.5	50
														-	1.3	42.7	45
														3.5	1.3	47.1	50
											EH*D-7M45	45.0	43.3	-	-	59.1	60
														3.5	-	63.5	70
														-	1.3	60.8	70
														3.5	1.3	65.1	70
DSC0907L	575/3/60	2	5.8	41.0	2	0.33	0.67	1	2.4	4.0	-	-	-	-	-	18.3	20
											-	-	-	3.5	-	21.8	25
											-	-	-	-	1.3	19.6	25
											-	-	-	3.5	1.3	23.1	25
											EH*D-7M15	15.0	14.4	-	-	23.0	25
														3.5	-	27.4	30
														-	1.3	24.7	25
														3.5	1.3	29.0	30
											EH*D-7M30	30.0	28.9	-	-	41.1	45
														3.5	-	45.5	50
														-	1.3	42.7	45
														3.5	1.3	47.1	50
											EH*D-7M45	45.0	43.3	-	-	59.1	60
														3.5	-	63.5	70
														-	1.3	60.8	70
														3.5	1.3	65.1	70

Electrical Data

Model Number	Electrical Rating	Compressor			Outdoor Fan Motor			Indoor Fan Motor			Optional Electric Heat			Optional Powered Convenience Outlet	Optional Power Exhaust	Power Supply	
		QTY	RLA	LRA	QTY	HP	FLA	TYPE	HP	FLA	PART #	KW*	FLA	FLA	FLA	MCA	MOP
DSC0907W	575/3/60	2	5.8	41.0	2	0.33	0.67	1	2.4	4.0	-	-	-	-	-	18.3	20
											-	-	-	3.5	-	21.8	25
											-	-	-	-	1.3	19.6	25
											-	-	-	3.5	1.3	23.1	25
											EH*D-7M15	15.0	14.4	-	-	23.0	25
														3.5	-	27.4	30
														-	1.3	24.7	25
														3.5	1.3	29.0	30
											EH*D-7M30	30.0	28.9	-	-	41.1	45
														3.5	-	45.5	50
														-	1.3	42.7	45
														3.5	1.3	47.1	50
											EH*D-7M45	45.0	43.3	-	-	59.1	60
														3.5	-	63.5	70
														-	1.3	60.8	70
														3.5	1.3	65.1	70
DSC1023D	208/230/3/60	2	14.1	120	2	0.33	2.0	1	2.4	8.0	-	-	-	-	-	43.7/43.7	50/50
											-	-	-	9.6/8.7	-	53.3/52.4	60/60
											-	-	-	-	3.3/3.0 (2.4)	47.0/46.7	60/60
											-	-	-	9.6/8.7	3.3/3.0 (2.4)	56.6/55.4	60/60
											EH*D-3M15	11.3/15.0	31.3/36.1	-	-	49.1/55.1	50/60
														9.6/8.7	-	61.1/66.0	70/70
														-	3.3/3.0 (2.4)	53.2/58.9	60/60
														9.6/8.7	3.3/3.0 (2.4)	65.2/69.7	70/70
											EH*D-3M30	22.5/30.0	62.5/72.2	-	-	88.2/100	90/110
														9.6/8.7	-	100/111	110/125
														-	3.3/3.0 (2.4)	92.3/104	100/110
														9.6/8.7	3.3/3.0 (2.4)	104/115	110/125
											EH*D-3M45	33.8/45.0	93.8/108	-	-	127/145	150/150
														9.6/8.7	-	139/156	150/175
														-	3.3/3.0 (2.4)	131/149	150/150
														9.6/8.7	3.3/3.0 (2.4)	143/160	150/175
DSC1023L	208/230/3/60	2	14.1	120	2	0.33	2.0	1	2.4	8.0	-	-	-	-	-	43.7/43.7	50/50
											-	-	-	9.6/8.7	-	53.3/52.4	60/60
											-	-	-	-	3.3/3.0 (2.4)	47.0/46.7	60/60
											-	-	-	9.6/8.7	3.3/3.0 (2.4)	56.6/55.4	60/60
											EH*D-3M15	11.3/15.0	31.3/36.1	-	-	49.1/55.1	50/60
														9.6/8.7	-	61.1/66.0	70/70
														-	3.3/3.0 (2.4)	53.2/58.9	60/60
														9.6/8.7	3.3/3.0 (2.4)	65.2/69.7	70/70
											EH*D-3M30	22.5/30.0	62.5/72.2	-	-	88.2/100	90/110
														9.6/8.7	-	100/111	110/125
														-	3.3/3.0 (2.4)	92.3/104	100/110
														9.6/8.7	3.3/3.0 (2.4)	104/115	110/125
											EH*D-3M45	33.8/45.0	93.8/108	-	-	127/145	150/150
														9.6/8.7	-	139/156	150/175
														-	3.3/3.0 (2.4)	131/149	150/150
														9.6/8.7	3.3/3.0 (2.4)	143/160	150/175
DSC1023W	208/230/3/60	2	14.1	120	2	0.33	2.0	1	2.4	8.0	-	-	-	-	-	43.7/43.7	50/50
											-	-	-	9.6/8.7	-	53.3/52.4	60/60
											-	-	-	-	3.3/3.0 (2.4)	47.0/46.7	60/60
											-	-	-	9.6/8.7	3.3/3.0 (2.4)	56.6/55.4	60/60
											EH*D-3M15	11.3/15.0	31.3/36.1	-	-	49.1/55.1	50/60
														9.6/8.7	-	61.1/66.0	70/70
														-	3.3/3.0 (2.4)	53.2/58.9	60/60
														9.6/8.7	3.3/3.0 (2.4)	65.2/69.7	70/70
											EH*D-3M30	22.5/30.0	62.5/72.2	-	-	88.2/100	90/110
														9.6/8.7	-	100/111	110/125
														-	3.3/3.0 (2.4)	92.3/104	100/110
														9.6/8.7	3.3/3.0 (2.4)	104/115	110/125
											EH*D-3M45	33.8/45.0	93.8/108	-	-	127/145	150/150
														9.6/8.7	-	139/156	150/175
														-	3.3/3.0 (2.4)	131/149	150/150
														9.6/8.7	3.3/3.0 (2.4)	143/160	150/175

Electrical Data

Model Number	Electrical Rating	Compressor			Outdoor Fan Motor			Indoor Fan Motor			Optional Electric Heat			Optional Powered Convenience Outlet	Optional Power Exhaust	Power Supply	
		QTY	RLA	LRA	QTY	HP	FLA	TYPE	HP	FLA	PART #	KW*	FLA	FLA	FLA	MCA	MOP
DSC1024D	460/3/60	2	6.4	55.1	2	0.33	0.85	1	2.4	5.4	-	-	-	-	-	21.5	25
											-	-	-	4.3	-	25.8	30
											-	-	-	-	1.2 (1.0)	22.7	25
											-	-	-	4.3	1.2 (1.0)	27.0	30
											EH*D-4M15	15.0	18.0	-	-	29.3	30
														4.3	-	34.7	35
														-	1.2 (1.0)	30.8	35
														4.3	1.2 (1.0)	36.2	40
											EH*D-4M30	30.0	36.1	-	-	51.9	60
														4.3	-	57.2	60
														-	1.2 (1.0)	53.4	60
														4.3	1.2 (1.0)	58.7	60
											EH*D-4M45	45.0	54.1	-	-	74.4	80
														4.3	-	79.8	80
														-	1.2 (1.0)	75.9	80
														4.3	1.2 (1.0)	81.3	90
DSC1024L	460/3/60	2	6.4	55.1	2	0.33	0.85	1	2.4	5.4	-	-	-	-	-	21.5	25
											-	-	-	4.3	-	25.8	30
											-	-	-	-	1.2 (1.0)	22.7	25
											-	-	-	4.3	1.2 (1.0)	27.0	30
											EH*D-4M15	15.0	18.0	-	-	29.3	30
														4.3	-	34.7	35
														-	1.2 (1.0)	30.8	35
														4.3	1.2 (1.0)	36.2	40
											EH*D-4M30	30.0	36.1	-	-	51.9	60
														4.3	-	57.2	60
														-	1.2 (1.0)	53.4	60
														4.3	1.2 (1.0)	58.7	60
											EH*D-4M45	45.0	54.1	-	-	74.4	80
														4.3	-	79.8	80
														-	1.2 (1.0)	75.9	80
														4.3	1.2 (1.0)	81.3	90
DSC1024W	460/3/60	2	6.4	55.1	2	0.33	0.85	1	2.4	5.4	-	-	-	-	-	21.5	25
											-	-	-	4.3	-	25.8	30
											-	-	-	-	1.2 (1.0)	22.7	25
											-	-	-	4.3	1.2 (1.0)	27.0	30
											EH*D-4M15	15.0	18.0	-	-	29.3	30
														4.3	-	34.7	35
														-	1.2 (1.0)	30.8	35
														4.3	1.2 (1.0)	36.2	40
											EH*D-4M30	30.0	36.1	-	-	51.9	60
														4.3	-	57.2	60
														-	1.2 (1.0)	53.4	60
														4.3	1.2 (1.0)	58.7	60
											EH*D-4M45	45.0	54.1	-	-	74.4	80
														4.3	-	79.8	80
														-	1.2 (1.0)	75.9	80
														4.3	1.2 (1.0)	81.3	90
DSC1027D	575/3/60	2	5.1	41.0	2	0.33	0.67	1	2.4	4.0	-	-	-	-	-	16.9	20
											-	-	-	3.5	-	20.4	25
											-	-	-	-	1.3	18.2	20
											-	-	-	3.5	1.3	21.7	25
											EH*D-7M15	15.0	14.4	-	-	23.0	25
														3.5	-	27.4	30
														-	1.3	24.7	25
														3.5	1.3	29.0	30
											EH*D-7M30	30.0	28.9	-	-	41.1	45
														3.5	-	45.5	50
														-	1.3	42.7	45
														3.5	1.3	47.1	50
											EH*D-7M45	45.0	43.3	-	-	59.1	60
														3.5	-	63.5	70
														-	1.3	60.8	70
														3.5	1.3	65.1	70

Electrical Data

Model Number	Electrical Rating	Compressor			Outdoor Fan Motor			Indoor Fan Motor			Optional Electric Heat			Optional Powered Convenience Outlet	Optional Power Exhaust	Power Supply	
		QTY	RLA	LRA	QTY	HP	FLA	TYPE	HP	FLA	PART #	KW*	FLA	FLA	FLA	MCA	MOP
DSC1027L	575/3/60	2	5.1	41.0	2	0.33	0.67	1	2.4	4.0	-	-	-	-	-	16.9	20
											-	-	-	3.5	-	20.4	25
											-	-	-	-	1.3	18.2	20
											-	-	-	3.5	1.3	21.7	25
											EH*D-7M15	15.0	14.4	-	-	23.0	25
														3.5	-	27.4	30
														-	1.3	24.7	25
														3.5	1.3	29.0	30
											EH*D-7M30	30.0	28.9	-	-	41.1	45
														3.5	-	45.5	50
														-	1.3	42.7	45
														3.5	1.3	47.1	50
											EH*D-7M45	45.0	43.3	-	-	59.1	60
														3.5	-	63.5	70
														-	1.3	60.8	70
														3.5	1.3	65.1	70
DSC1027W	575/3/60	2	5.1	41.0	2	0.33	0.67	1	2.4	4.0	-	-	-	-	-	16.9	20
											-	-	-	3.5	-	20.4	25
											-	-	-	-	1.3	18.2	20
											-	-	-	3.5	1.3	21.7	25
											EH*D-7M15	15.0	14.4	-	-	23.0	25
														3.5	-	27.4	30
														-	1.3	24.7	25
														3.5	1.3	29.0	30
											EH*D-7M30	30.0	28.9	-	-	41.1	45
														3.5	-	45.5	50
														-	1.3	42.7	45
														3.5	1.3	47.1	50
											EH*D-7M45	45.0	43.3	-	-	59.1	60
														3.5	-	63.5	70
														-	1.3	60.8	70
														3.5	1.3	65.1	70
DSC1203D	208/230/3/60	2	17.3	155	2	0.33	2.0	1	2.4	8.0	-	-	-	-	-	50.9/50.9	60/60
											-	-	-	9.6/8.7	-	60.5/59.6	70/70
											-	-	-	-	3.3/3.0 (2.4)	54.2/53.9	70/70
											-	-	-	9.6/8.7	3.3/3.0 (2.4)	63.8/62.6	80/70
											EH*D-3M15	11.3/15.0	31.3/36.1	-	-	50.9/55.1	60/60
														9.6/8.7	-	61.1/66.0	70/70
														-	3.3/3.0 (2.4)	54.2/58.9	70/70
														9.6/8.7	3.3/3.0 (2.4)	65.2/69.7	80/70
											EH*D-3M30	22.5/30.0	62.5/72.2	-	-	88.2/100	90/110
														9.6/8.7	-	100/111	110/125
														-	3.3/3.0 (2.4)	92.3/104	100/110
														9.6/8.7	3.3/3.0 (2.4)	104/115	110/125
											EH*D-3M45	33.8/45.0	93.8/108	-	-	127/145	150/150
														9.6/8.7	-	139/156	150/175
														-	3.3/3.0 (2.4)	131/149	150/150
														9.6/8.7	3.3/3.0 (2.4)	143/160	150/175
DSC1203L	208/230/3/60	2	17.3	155	2	0.33	2.0	1	3.5	10.9	-	-	-	-	-	53.8/53.8	70/70
											-	-	-	9.6/8.7	-	63.4/62.5	80/70
											-	-	-	-	3.3/3.0 (2.4)	57.1/56.8	70/70
											-	-	-	9.6/8.7	3.3/3.0 (2.4)	66.7/65.5	80/80
											EH*D-3M15	11.3/15.0	31.3/36.1	-	-	53.8/58.7	70/70
														9.6/8.7	-	64.7/69.6	80/70
														-	3.3/3.0 (2.4)	57.1/62.5	70/70
														9.6/8.7	3.3/3.0 (2.4)	68.9/73.4	80/80
											EH*D-3M30	22.5/30.0	62.5/72.2	-	-	91.8/104	100/110
														9.6/8.7	-	104/115	110/125
														-	3.3/3.0 (2.4)	96.0/108	100/110
														9.6/8.7	3.3/3.0 (2.4)	108/118	110/125
											EH*D-3M45	33.8/45.0	93.8/108	-	-	131/149	150/150
														9.6/8.7	-	143/160	150/175
														-	3.3/3.0 (2.4)	135/153	150/175
														9.6/8.7	3.3/3.0 (2.4)	147/164	150/175

Electrical Data

Model Number	Electrical Rating	Compressor			Outdoor Fan Motor			Indoor Fan Motor			Optional Electric Heat			Optional Powered Convenience Outlet	Optional Power Exhaust	Power Supply	
		QTY	RLA	LRA	QTY	HP	FLA	TYPE	HP	FLA	PART #	KW*	FLA	FLA	FLA	MCA	MOP
DSC1203W	208/230/3/60	2	17.3	155	2	0.33	2.0	1	3.5	10.9	-	-	-	-	-	53.8/53.8	70/70
											-	-	-	9.6/8.7	-	63.4/62.5	80/70
											-	-	-	-	3.3/3.0 (2.4)	57.1/56.8	70/70
											-	-	-	9.6/8.7	3.3/3.0 (2.4)	66.7/65.5	80/80
											EH*D-3M15	11.3/15.0	31.3/36.1	-	-	53.8/58.7	70/70
														9.6/8.7	-	64.7/69.6	80/70
														-	3.3/3.0 (2.4)	57.1/62.5	70/70
														9.6/8.7	3.3/3.0 (2.4)	68.9/73.4	80/80
											EH*D-3M30	22.5/30.0	62.5/72.2	-	-	91.8/104	100/110
														9.6/8.7	-	104/115	110/125
														-	3.3/3.0 (2.4)	96.0/108	100/110
														9.6/8.7	3.3/3.0 (2.4)	108/118	110/125
											EH*D-3M45	33.8/45.0	93.8/108	-	-	131/149	150/150
														9.6/8.7	-	143/160	150/175
														-	3.3/3.0 (2.4)	135/153	150/175
														9.6/8.7	3.3/3.0 (2.4)	147/164	150/175
DSC1204D	460/3/60	2	7.7	58.1	2	0.33	0.85	1	2.4	5.4	-	-	-	-	-	24.4	30
											-	-	-	4.3	-	28.7	35
											-	-	-	-	1.2 (1.0)	25.6	30
											-	-	-	4.3	1.2 (1.0)	29.9	35
											EH*D-4M15	15.0	18.0	-	-	29.3	30
														4.3	-	34.7	35
														-	1.2 (1.0)	30.8	35
														4.3	1.2 (1.0)	36.2	40
											EH*D-4M30	30.0	36.1	-	-	51.9	60
														4.3	-	57.2	60
														-	1.2 (1.0)	53.4	60
														4.3	1.2 (1.0)	58.7	60
											EH*D-4M45	45.0	54.1	-	-	74.4	80
														4.3	-	79.8	80
														-	1.2 (1.0)	75.9	80
														4.3	1.2 (1.0)	81.3	90
DSC1204L	460/3/60	2	7.7	58.1	2	0.33	0.85	1	3.5	7.2	-	-	-	-	-	26.2	30
											-	-	-	4.3	-	30.5	35
											-	-	-	-	1.2 (1.0)	27.4	30
											-	-	-	4.3	1.2 (1.0)	31.7	35
											EH*D-4M15	15.0	18.0	-	-	31.6	35
														4.3	-	36.9	40
														-	1.2 (1.0)	33.1	35
														4.3	1.2 (1.0)	38.4	40
											EH*D-4M30	30.0	36.1	-	-	54.1	60
														4.3	-	59.5	60
														-	1.2 (1.0)	55.6	60
														4.3	1.2 (1.0)	61.0	70
											EH*D-4M45	45.0	54.1	-	-	76.7	80
														4.3	-	82.0	90
														-	1.2 (1.0)	78.2	80
														4.3	1.2 (1.0)	83.5	90
DSC1204W	460/3/60	2	7.7	58.1	2	0.33	0.85	1	3.5	7.2	-	-	-	-	-	26.2	30
											-	-	-	4.3	-	30.5	35
											-	-	-	-	1.2 (1.0)	27.4	30
											-	-	-	4.3	1.2 (1.0)	31.7	35
											EH*D-4M15	15.0	18.0	-	-	31.6	35
														4.3	-	36.9	40
														-	1.2 (1.0)	33.1	35
														4.3	1.2 (1.0)	38.4	40
											EH*D-4M30	30.0	36.1	-	-	54.1	60
														4.3	-	59.5	60
														-	1.2 (1.0)	55.6	60
														4.3	1.2 (1.0)	61.0	70
											EH*D-4M45	45.0	54.1	-	-	76.7	80
														4.3	-	82.0	90
														-	1.2 (1.0)	78.2	80
														4.3	1.2 (1.0)	83.5	90

Electrical Data

Model Number	Electrical Rating	Compressor			Outdoor Fan Motor			Indoor Fan Motor			Optional Electric Heat			Optional Powered Convenience Outlet	Optional Power Exhaust	Power Supply	
		QTY	RLA	LRA	QTY	HP	FLA	TYPE	HP	FLA	PART #	KW*	FLA	FLA	FLA	MCA	MOP
DSC1207D	575/3/60	2	7.0	47.8	2	0.33	0.67	1	2.4	4.0	-	-	-	-	-	21.2	25
											-	-	-	3.5	-	24.7	30
											-	-	-	-	1.3	22.5	25
											-	-	-	3.5	1.3	26.0	30
											EH*D-7M15	15.0	14.4	-	-	23.0	25
														3.5	-	27.4	30
														-	1.3	24.7	25
														3.5	1.3	29.0	30
											EH*D-7M30	30.0	28.9	-	-	41.1	45
														3.5	-	45.5	50
														-	1.3	42.7	45
														3.5	1.3	47.1	50
											EH*D-7M45	45.0	43.3	-	-	59.1	60
														3.5	-	63.5	70
														-	1.3	60.8	70
														3.5	1.3	65.1	70
DSC1207L	575/3/60	2	7.0	47.8	2	0.33	0.67	1	3.5	5.0	-	-	-	-	-	22.2	25
											-	-	-	3.5	-	25.7	30
											-	-	-	-	1.3	23.5	30
											-	-	-	3.5	1.3	27.0	30
											EH*D-7M15	15.0	14.4	-	-	24.3	25
														3.5	-	28.7	30
														-	1.3	25.9	30
														3.5	1.3	30.3	35
											EH*D-7M30	30.0	28.9	-	-	42.3	45
														3.5	-	46.7	50
														-	1.3	44.0	45
														3.5	1.3	48.3	50
											EH*D-7M45	45.0	43.3	-	-	60.4	70
														3.5	-	64.8	70
														-	1.3	62.0	70
														3.5	1.3	66.4	70
DSC1207W	575/3/60	2	7.0	47.8	2	0.33	0.67	1	3.5	5.0	-	-	-	-	-	22.2	25
											-	-	-	3.5	-	25.7	30
											-	-	-	-	1.3	23.5	30
											-	-	-	3.5	1.3	27.0	30
											EH*D-7M15	15.0	14.4	-	-	24.3	25
														3.5	-	28.7	30
														-	1.3	25.9	30
														3.5	1.3	30.3	35
											EH*D-7M30	30.0	28.9	-	-	42.3	45
														3.5	-	46.7	50
														-	1.3	44.0	45
														3.5	1.3	48.3	50
											EH*D-7M45	45.0	43.3	-	-	60.4	70
														3.5	-	64.8	70
														-	1.3	62.0	70
														3.5	1.3	66.4	70
DSC1503D	208/230/3/60	2	19.2	157	2	0.5	2.7	1	3.5	10.9	-	-	-	-	-	59.5/59.5	70/70
											-	-	-	9.6/8.7	-	69.1/68.2	80/80
											-	-	-	-	3.3/3.0 (2.4)	62.8/62.5	80/80
											-	-	-	9.6/8.7	3.3/3.0 (2.4)	72.4/71.2	90/80
											EH*D-3M15	11.3/15.0	31.3/36.1	-	-	59.5/59.5	70/70
														9.6/8.7	-	69.1/69.6	80/80
														-	3.3/3.0 (2.4)	62.8/62.5	80/80
														9.6/8.7	3.3/3.0 (2.4)	72.4/73.4	90/80
											EH*D-3M30	22.5/30.0	62.5/72.2	-	-	91.8/104	100/110
														9.6/8.7	-	104/115	110/125
														-	3.3/3.0 (2.4)	96.0/108	100/110
														9.6/8.7	3.3/3.0 (2.4)	108/118	110/125
											EH*D-3M45	33.8/45.0	93.8/108	-	-	131/149	150/150
														9.6/8.7	-	143/160	150/175
														-	3.3/3.0 (2.4)	135/153	150/175
														9.6/8.7	3.3/3.0 (2.4)	147/164	150/175

Electrical Data

Model Number	Electrical Rating	Compressor			Outdoor Fan Motor			Indoor Fan Motor			Optional Electric Heat			Optional Powered Convenience Outlet	Optional Power Exhaust	Power Supply	
		QTY	RLA	LRA	QTY	HP	FLA	TYPE	HP	FLA	PART #	KW*	FLA	FLA	FLA	MCA	MOP
DSC1503L	208/230/3/60	2	19.2	157	2	0.5	2.7	1	5.0	14.5	-	-	-	-	-	63.1/63.1	80/80
											-	-	-	9.6/8.7	-	72.7/71.8	90/90
											-	-	-	-	3.3/3.0 (2.4)	66.4/66.1	80/80
											-	-	-	9.6/8.7	3.3/3.0 (2.4)	76.0/74.8	90/90
											EH*D-3M15	11.3/15.0	31.3/36.1	-	-	63.1/63.2	80/80
														9.6/8.7	-	72.7/74.1	90/90
														-	3.3/3.0 (2.4)	66.4/67.0	80/80
														9.6/8.7	3.3/3.0 (2.4)	76.0/77.9	90/90
											EH*D-3M30	22.5/30.0	62.5/72.2	-	-	96.3/108	100/110
														9.6/8.7	-	108/119	110/125
														-	3.3/3.0 (2.4)	100/112	110/125
														9.6/8.7	3.3/3.0 (2.4)	112/123	125/125
											EH*D-3M45	33.8/45.0	93.8/108	-	-	135/153	150/175
														9.6/8.7	-	147/164	150/175
														-	3.3/3.0 (2.4)	140/157	150/175
														9.6/8.7	3.3/3.0 (2.4)	152/168	175/175
DSC1503W	208/230/3/60	2	19.2	157	2	0.5	2.7	1	5.0	14.5	-	-	-	-	-	63.1/63.1	80/80
											-	-	-	9.6/8.7	-	72.7/71.8	90/90
											-	-	-	-	3.3/3.0 (2.4)	66.4/66.1	80/80
											-	-	-	9.6/8.7	3.3/3.0 (2.4)	76.0/74.8	90/90
											EH*D-3M15	11.3/15.0	31.3/36.1	-	-	63.1/63.2	80/80
														9.6/8.7	-	72.7/74.1	90/90
														-	3.3/3.0 (2.4)	66.4/67.0	80/80
														9.6/8.7	3.3/3.0 (2.4)	76.0/77.9	90/90
											EH*D-3M30	22.5/30.0	62.5/72.2	-	-	96.3/108	100/110
														9.6/8.7	-	108/119	110/125
														-	3.3/3.0 (2.4)	100/112	110/125
														9.6/8.7	3.3/3.0 (2.4)	112/123	125/125
											EH*D-3M45	33.8/45.0	93.8/108	-	-	135/153	150/175
														9.6/8.7	-	147/164	150/175
														-	3.3/3.0 (2.4)	140/157	150/175
														9.6/8.7	3.3/3.0 (2.4)	152/168	175/175
DSC1504D	460/3/60	2	9.0	74.8	2	0.5	1.4	1	3.5	7.2	-	-	-	-	-	30.2	35
											-	-	-	4.3	-	34.5	40
											-	-	-	-	1.2 (1.0)	31.4	40
											-	-	-	4.3	1.2 (1.0)	35.7	40
											EH*D-4M15	15.0	18.0	-	-	31.6	35
														4.3	-	36.9	40
														-	1.2 (1.0)	33.1	40
														4.3	1.2 (1.0)	38.4	40
											EH*D-4M30	30.0	36.1	-	-	54.1	60
														4.3	-	59.5	60
														-	1.2 (1.0)	55.6	60
														4.3	1.2 (1.0)	61.0	70
											EH*D-4M45	45.0	54.1	-	-	76.7	80
														4.3	-	82.0	90
														-	1.2 (1.0)	78.2	80
														4.3	1.2 (1.0)	83.5	90
DSC1504L	460/3/60	2	9.0	74.8	2	0.5	1.4	1	5.0	10.6	-	-	-	-	-	33.6	40
											-	-	-	4.3	-	37.9	45
											-	-	-	-	1.2 (1.0)	34.8	45
											-	-	-	4.3	1.2 (1.0)	39.1	45
											EH*D-4M15	15.0	18.0	-	-	35.8	40
														4.3	-	41.2	45
														-	1.2 (1.0)	37.3	45
														4.3	1.2 (1.0)	42.7	45
											EH*D-4M30	30.0	36.1	-	-	58.4	60
														4.3	-	63.7	70
														-	1.2 (1.0)	59.9	60
														4.3	1.2 (1.0)	65.2	70
											EH*D-4M45	45.0	54.1	-	-	80.9	90
														4.3	-	86.3	90
														-	1.2 (1.0)	82.4	90
														4.3	1.2 (1.0)	87.8	90

Electrical Data

Model Number	Electrical Rating	Compressor			Outdoor Fan Motor			Indoor Fan Motor			Optional Electric Heat			Optional Powered Convenience Outlet	Optional Power Exhaust	Power Supply	
		QTY	RLA	LRA	QTY	HP	FLA	TYPE	HP	FLA	PART #	KW*	FLA	FLA	FLA	MCA	MOP
DSC1504W	460/3/60	2	9.0	74.8	2	0.5	1.4	1	5.0	10.6	-	-	-	-	-	33.6	40
											-	-	-	4.3	-	37.9	45
											-	-	-	-	1.2 (1.0)	34.8	45
											-	-	-	4.3	1.2 (1.0)	39.1	45
											EH*D-4M15	15.0	18.0	-	-	35.8	40
														4.3	-	41.2	45
														-	1.2 (1.0)	37.3	45
														4.3	1.2 (1.0)	42.7	45
											EH*D-4M30	30.0	36.1	-	-	58.4	60
														4.3	-	63.7	70
														-	1.2 (1.0)	59.9	60
														4.3	1.2 (1.0)	65.2	70
											EH*D-4M45	45.0	54.1	-	-	80.9	90
														4.3	-	86.3	90
														-	1.2 (1.0)	82.4	90
														4.3	1.2 (1.0)	87.8	90
DSC1507D	575/3/60	2	7.0	53.9	2	0.5	1.0	1	3.5	5.0	-	-	-	-	-	22.8	25
											-	-	-	3.5	-	26.3	30
											-	-	-	-	1.3	24.1	30
											-	-	-	3.5	1.3	27.6	30
											EH*D-7M15	15.0	14.4	-	-	24.3	25
														3.5	-	28.7	30
														-	1.3	25.9	30
														3.5	1.3	30.3	35
											EH*D-7M30	30.0	28.9	-	-	42.3	45
														3.5	-	46.7	50
														-	1.3	44.0	45
														3.5	1.3	48.3	50
											EH*D-7M45	45.0	43.3	-	-	60.4	70
														3.5	-	64.8	70
														-	1.3	62.0	70
														3.5	1.3	66.4	70
DSC1507L	575/3/60	2	7.0	53.9	2	0.5	1.0	1	5.0	7.2	-	-	-	-	-	25.0	30
											-	-	-	3.5	-	28.5	35
											-	-	-	-	1.3	26.3	30
											-	-	-	3.5	1.3	29.8	35
											EH*D-7M15	15.0	14.4	-	-	27.0	30
														3.5	-	31.4	35
														-	1.3	28.7	30
														3.5	1.3	33.0	35
											EH*D-7M30	30.0	28.9	-	-	45.1	50
														3.5	-	49.5	50
														-	1.3	46.7	50
														3.5	1.3	51.1	60
											EH*D-7M45	45.0	43.3	-	-	63.1	70
														3.5	-	67.5	70
														-	1.3	64.8	70
														3.5	1.3	69.1	70
DSC1507W	575/3/60	2	7.0	53.9	2	0.5	1.0	1	5.0	7.2	-	-	-	-	-	25.0	30
											-	-	-	3.5	-	28.5	35
											-	-	-	-	1.3	26.3	30
											-	-	-	3.5	1.3	29.8	35
											EH*D-7M15	15.0	14.4	-	-	27.0	30
														3.5	-	31.4	35
														-	1.3	28.7	30
														3.5	1.3	33.0	35
											EH*D-7M30	30.0	28.9	-	-	45.1	50
														3.5	-	49.5	50
														-	1.3	46.7	50
														3.5	1.3	51.1	60
											EH*D-7M45	45.0	43.3	-	-	63.1	70
														3.5	-	67.5	70
														-	1.3	64.8	70
														3.5	1.3	69.1	70

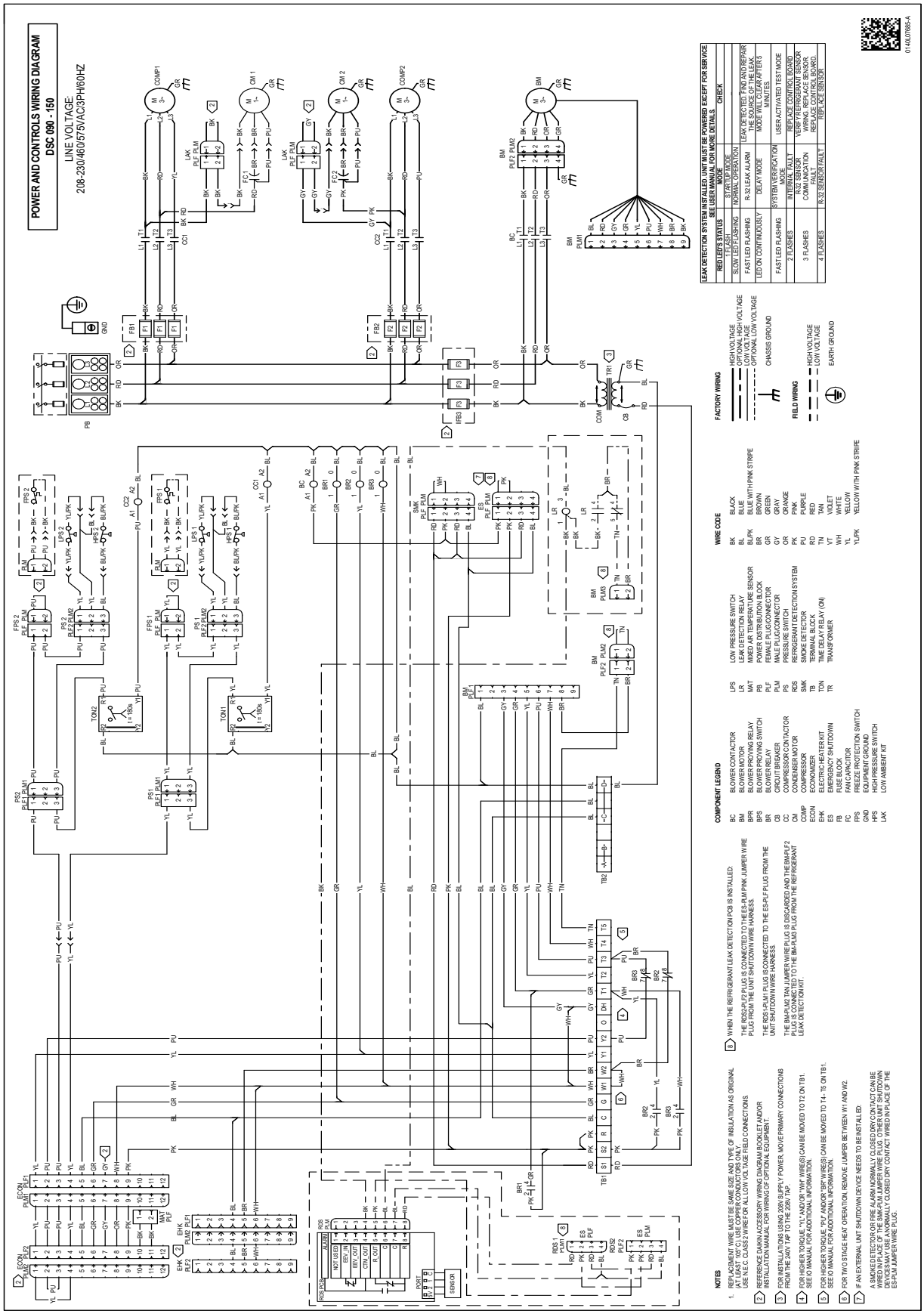

Wiring is subject to change. Always refer to the wiring diagram on the unit for the most up-to-date wiring.

WARNING

High Voltage: Disconnect all power before servicing or installing this unit. Multiple power sources may be present. Failure to do so may cause property damage, personal injury, or death.

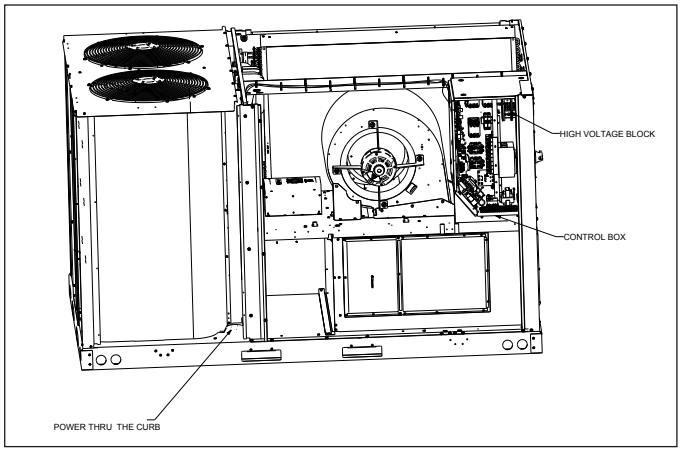

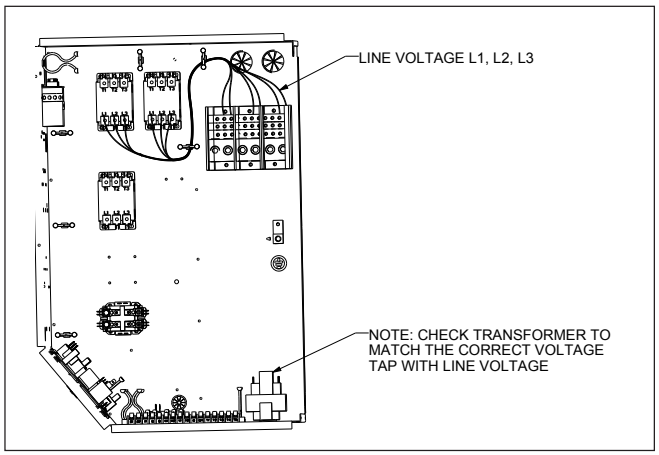

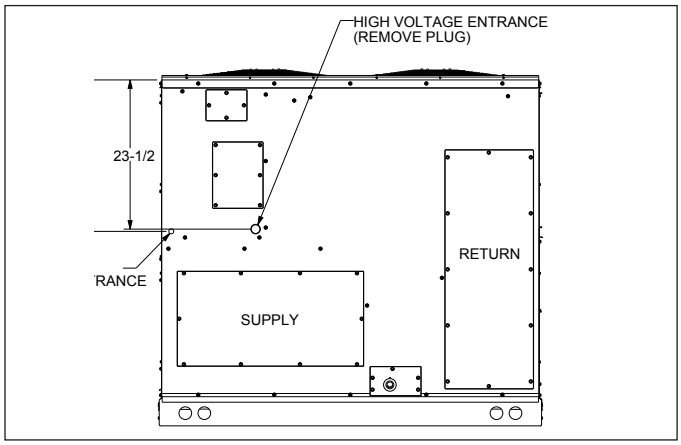

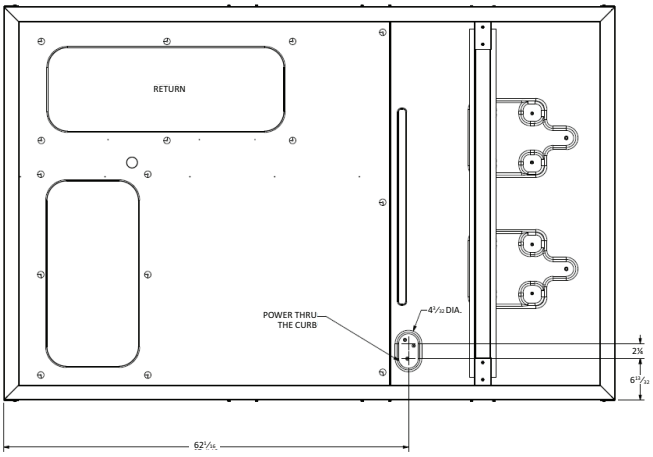

Unit Clearances

Service Clearance

Allow for recommended service clearances as shown in figure to the right. In situations that have multiple units, a 48" minimum clearance is required between the condenser coils. A clearance of 48" is recommended on all sides of the unit to allow service access and to ensure proper ventilation and condenser airflow. The top of the unit should be unobstructed. Provide a roof walkway along the sides of the unit for service and access to controls and components. Contact your Daikin sales representative for service requirements less than those recommended.

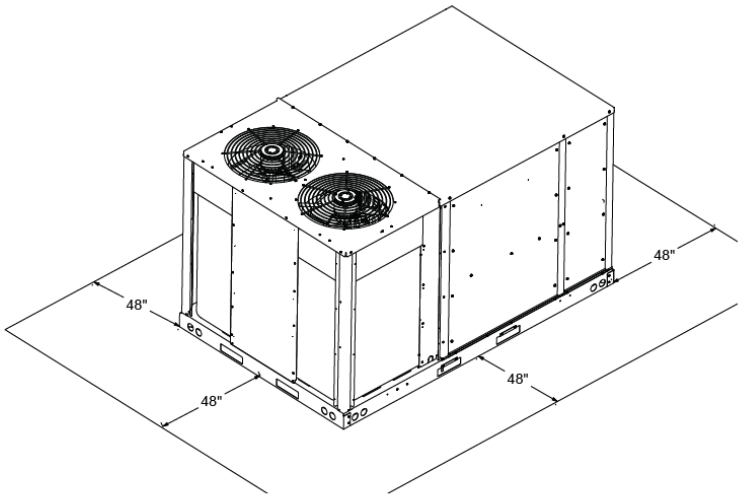

UNIT CLEARANCES

Unit Location

The structural engineer must verify that the roof has adequate support and ability to minimize deflection. Take extreme caution when using on a wooden roof structure. Unit condenser coils should be in a location that avoids any heated exhaust air.

Allow sufficient space around the unit for maintenance/service clearance. Consult your Daikin sales representative if available clearances do not meet minimum recommendations.

Where code considerations, such as the NEC, require extended clearances, these take precedence.

Provisions for forks have been included in the unit base frame. No other fork locations are approved.

» Unit must be lifted by the four lifting holes located at the base frame corners.

» Lifting cables should be attached to the unit with shackles.

» The distance between the crane hook and the top of the unit must not be less than 60".

» Two spreader bars must span over the unit to prevent damage to the cabinet by the lift cables. Spreader bars must be of sufficient length so that cables do not come in contact with the unit during transport. Remove wood struts mounted beneath unit base frame before setting unit on roof curb. These struts are intended to protect unit base frame from forklift damage. To remove the struts, extract the sheet metal retainers and pull the struts through the base of the unit. Refer to rigging label on the unit.

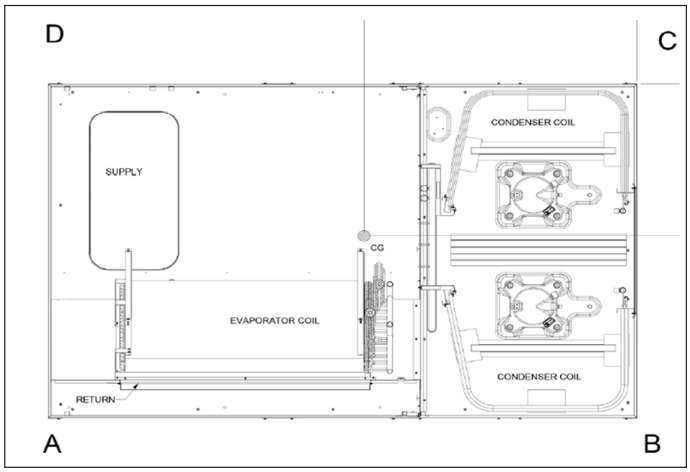

Corner & Center-of-Gravity Locations

Important: If using bottom discharge with roof curb, ductwork should be attached to the curb prior to installing the unit. Refer to the Roof Curb Installation Instructions for proper curb installation. Curbing must be installed in compliance with the National Roofing Contractors Association Manual. Lower unit carefully onto roof mounting curb. While rigging the unit, the center of gravity will cause the condenser end to be lower than the supply air end. Bring condenser end of unit into alignment with the curb. With condenser end of the unit resting on curb member and using curb as a fulcrum, lower opposite end of the unit until entire unit is seated on the curb. When a rectangular cantilever curb is used, take care to center the unit. Check for proper alignment and orientation of supply and return openings with duct.

Roof Curb Installation

The roof curb is field-assembled and must be installed level (within 1/16" per foot side to side). A sub-base must be constructed by the contractor in applications involving pitched roofs. Gaskets are furnished and must be installed between the unit and curb. For proper installation, follow NRCA guidelines. In applications requiring post and rail installation, an I-beam securely mounted on multiple posts should support the unit on each side. In addition, the insulation on the underside of the unit should be protected from the elements. Applications in geographic areas subjected to seismic or hurricane conditions must meet code requirements for fastening the unit to the curb and the curb to the building structure. For further and more detailed information please refer to our Daikin Light Commercial Packaged unit IOD.

Weights

Model	Shipping Weight (lbs)	Operating Weight (lbs)	Corner Weights (lbs)				Length	Width
			A	B	C	D	X (in)	Y (in)
DSC0903D	1087	1015	243	226	274	272	$30^{3}/_{5}$	$42^{7}/_{10}$
DSC1023D	1099	1027	363	142	202	320	$30^{3}/_{5}$	$42^{7}/_{10}$
DSC1203D	1142	1070	229	280	235	326	$30^{3}/_{5}$	$42^{7}/_{10}$
DSC1503D	1225	1153	231	306	274	341	$30^{3}/_{5}$	$42^{7}/_{10}$

For details on accessories refer to document **PM-LC-ACCESSORIES**

Notes

Notes

Notes

Notes

Notes

Our continuing commitment to quality products may mean a change in specifications without notice.
©2026 DAIKIN COMFORT TECHNOLOGIES MANUFACTURING, INC. • Houston, Texas • Printed in the USA.