DSC Commercial

R-32 Standard Efficiency Air Conditioner
Direct-Drive Packaged Rooftop Unit
7.5 - 12.5 Tons DSC Light Commercial

7.5-10 Ton Up to 16 IEER / 12 EER

12.5 Ton 15.2 IEER / 11.4 EER

5 YEAR PARTS LIMITED WARRANTY

Intertek

AHRI CERTIFIED

ISO 9001

ISO 14001 CERTIFIED ENVIRONMENTAL MANAGEMENT SYSTEM

R32

*Complete warranty details available from your local distributor or manufacturer's representative or at www.daikincomfort.com or www.daikinac.com

Our Perfect Package:

Harnessing energy-efficient performance, proven technology, and enhanced comfort for life.

Since becoming the first company in Japan to manufacture packaged air conditioning systems, in 1951, Daikin has supported comfortable indoor living based on the strengths and technologies that have led to the growth of the company becoming one of the world's largest manufacturers of HVAC products, systems and refrigerants.

Today, as a comprehensive global manufacturer of HVAC products and systems, the Daikin brand is committed to being recognized as a truly global and excellent company capable of continually creating new value for its customers. The company plans to pursue sustainable growth and foster business operations that consistently harmonize with the goals of improving indoor comfort.

The group philosophy of the company includes:

- Creating new value continuously for customers
- Developing world leading energy-saving technology
- Being a flexible and dynamic organization
- Allowing employees to be the driving force for the success of the company
- Fostering an atmosphere of best practices, boldness, and innovation
- Thinking and acting globally

Contents

2	**Introduction**	2
4	**Nomenclature**	4
5	**Features and Benefits**	5
	Applications	8
	Serviceability	8
9	**Product Specifications**	9
	Coil Dimensions	14
	AHRI Ratings	14
	Sound Data	14
15	**Dimensional Data**	15
16	**Expanding Cooling Data**	16
24	**Electric Heater Data**	24
25	**Air Flow**	25
42	**Static Pressure**	42
43	**Electrical Data**	43
52	**Wiring Diagrams**	52
53	**Electrical Connections**	53
	Unit Clearances	53
54	**Installation**	54
	Weights	54

For details on accessories refer to document **PM-LC-ACCESSORIES**

Nomenclature

D	S	C	300	3	S	400	C	A	A	X	X	X	X	X	X	X	X	A	*
1	2	3	4,5,6	7	8	9,10,11	12	13	14	15	16	17	18	19	20	21	22	23	24

Brand
D Daikin

Configuration
S R 32 Standard Efficiency
H R 32 High Efficiency

Application
C Cooling
G Gas/Electric
H Heat Pump

Nominal Cooling Capacity

036	3 Tons	090	7½ Tons	180	15 Tons
048	4 Tons	102	8½ Tons	240	20 Tons
060	5 Tons	120	10 Tons	300	25 Tons
072	6 Tons	150	12½ tons		

Voltage

1	208-230/1/60	4	460/3/60
3	208-230/3/60	7	575/3/60

Supply Fan/Drive Type/Motor
D Direct Drive - Standard Static
L Direct Drive - Medium Static
W Direct Drive - High Static

Nominal Heating Capacity

Gas/Electric

045	45,000 BTU/h
060	60,000 BTU/h
070	70,000 BTU/h
080	80,000 BTU/h
090	90,000 BTU/h
100	100,000 BTU/h
115	115,000 BTU/h
125	125,000 BTU/h
130	130,000 BTU/h
140	140,000 BTU/h
150	150,000 BTU/h
180	180,000 BTU/h
210	210,000 BTU/h
225	225,000 BTU/h
240	240,000 BTU/h
260	260,000 BTU/h
350	350,000 BTU/h
360	360,000 BTU/h
400	400,000 BTU/h
480	480,000 BTU/h

A/C Factory-Installed Electric Heat

XXX	No Heat	XXX	No Heat
005	5kW	030	30 kW
010	10 kW	045	45kW
015	15 kW	060	60kW
020	20 kW	075	75kW

Electric Heat w/ SCR controls

S05	5kW	S22	20 kW
S10	10 kW	S25	25 kW
S15	15 kW	S30	30 kW
S16	15 kW	S31	30 kW
S18	18 kW	S45	45 kW
S20	20 kW	S46	45 kW
S21	20 kW	S60	60 kW
		S75	75kW

**See product specifications for heat size(s) available for each capacity.*

Refrigeration Systems
A Single stage cooling modes
C Two stage cooling modes
F Two stage cooling modes with Hot Gas Reheat and Low-ambient control
G Single stage cooling mode with Low-ambient controller
H Two stage cooling mode with Low-ambient controller

Heat Exchanger
X No options
A Standard Aluminized Exchanger
S Stainless Steel Exchanger
U Ultra Low NoX

Controls
A Electro-mechanical controls
B DDC w/ BACnet interface

Revision Levels
Major & Minor

X No Options

PE Connection
X No Options
B Single-point power connection for Power Exhaust

IAQ
X No Options

Service Options
X No Option
A Powered convenience outlet
B Non-powered convenience outlet
C Hinge Panels
D Hinged Panels and Powered convenience outlet
E Hinged Panels and non-powered convenience outlet

Electrical
X No Options
A Non-Fused Disconnect
B Phase Monitor
C Thru-the-base connections
E Non-Fused Disconnect and Phase Monitor
F Non-Fused Disconnect and Thru-the-base connectons
H Phase Monitor and Thru-the-base connections
L Non-Fused Disconnect, Thru-the-base connectons and Phase Monitor

Economizer
X No Options
A Ultra Low-Leak Downflow Economizer w/ Enthalpy Sensor
C Ultra Low-Leak Internal Horizontal Economizer w/ Enthalpy Sensor
E Ultra Low-Leak Downflow Economizer for DDC controls w/ Enthalpy Sensor
F Ultra Low-Leak Horizontal Economizer for DDC controls w/ Enthalpy Sensor
G Ultra Low-Leak Downflow Economizer w/ Dry Bulb Sensor
J Ultra Low-Leak Internal Horizontal Economizer w/ Dry Bulb Sensor
L Ultra Low-Leak Downflow Economizer for DDC controls w/ Dry Bulb Sensor
M Ultra Low-Leak Horizontal Economizer for DDC controls w/ Dry Bulb Sensor

Coils, Hail guard
X No Options
C Hail Guard

Sensors
X No Options
A RA Smoke Detector
B SA Smoke Detector
C RA & SA Smoke Detector

AC Stocking Models

New Daikin 7.5-12.5 Ton Direct-Drive

Model Number	Code String
DSC0903D000001S	DSC0903DXXXCXADXXXXXX
DSC0904D000001S	DSC0904DXXXCXADXXXXXX
DSC0907D000001S	DSC0907DXXXCXADXXXXXX
DSC1023D000001S	DSC1023DXXXCXADXXXXXX
DSC1024D000001S	DSC1024DXXXCXADXXXXXX
DSC1027D000001S	DSC1027DXXXCXADXXXXXX
DSC1203D000001S	DSC1203DXXXCXADXXXXXX
DSC1204D000001S	DSC1204DXXXCXADXXXXXX
DSC1207D000001S	DSC1207DXXXCXADXXXXXX
DSC1503D000001S	DSC1503DXXXCXADXXXXXX
DSC1504D000001S	DSC1504DXXXCXADXXXXXX
DSC1507D000001S	DSC1507DXXXCXADXXXXXX
DSC1503W000001F	DSC1503LXXXCXADXXXXXX
DSC1504W000001F	DSC1504LXXXCXADXXXXXX
DSC1507W000001F	DSC1507LXXXCXADXXXXXX

Daikin Packaged Rooftop Units (RTUs) are built to perform, with features and options that help provide low installation and operation costs, superior indoor air quality, efficient operation, and longevity.

Installation

Daikin Packaged units are designed with fast and easy installation in mind and are ideal for both new construction and retrofit projects. Our packaged rooftop units are built to be a direct replacement for most rooftop units in the field without the need of a curb adapter.

Cabinet Construction

Daikin packaged rooftop units are made with high quality galvanized steel with a powder-paint finish to provide higher corrosion resistance.

» Easy accessibility using our tool-less filter access.

» Unit is fully insulated to prevent sweating and thermal losses, using our foil face fiberglass insulation which also omits exposed filter fibers into the airstream

» 1" Raised flanged edges around the supply and return offer easy installation for the duct connections.

» The full perimeter base rail is built using heavy gauge galvanized steel for a stronger structural installation, the base rails are a minimum of 3 ½" tall and include holes to allow for overhead rigging and lifting with forklifts.

» Electrical lines and can be brought through the base of the unit or through the horizontal knockout for easy installation and accessibility on the field.

Compressor

High performance, low noise scroll compressors to match the required total load.

» Resiliently factory-mounted on rubber grommets for vibration isolation

» Refrigeration circuits includes both low and high pressure safety switches.

» Unit is factory charged with environmentally friendly Low GWP R32 refrigerant.

» Two single-stage scroll compressor

» Compressors located outside the condenser section to avoid air bypass.

» Internal overload protection included with compressor.

Supply Fan

Indoor forward curved fan, paired with direct-drive motor, provide for easy airflow control.

» Ball bearing Direct-Drive EEM motor removes the need for belts, sheaves, bearings and lubrication.

» Slide out forward curb fan for easy maintenance and replacement.

» High-static drive options for application with high airflow/ static requirements.

» Each fan assembly is dynamically trim balanced at the factory before shipment for quick start-up and efficient operation.

» Motor with thermal overload is provided for motor long lasting operation.

Coils

All units use large face area outdoor coils. These coils are constructed with microchannel technology for high operating efficiencies.

The indoor coil section is installed in a draw through configuration to provide better dehumidification.

» Microchannel heat exchanger technology on all condenser coils for improved performance and reduced refrigerant load.

» All units use large face area outdoor coils.

» Coils are factory pressure tested to ensure pressure and leak integrity.

» Copper tube / aluminum fin coils evaporator coils

Controls and Wiring

Packaged rooftop units come equipped with a well-organized, large, easy to use weatherproof internal control box with easy access, for a better user experience.

» Units are factory-wired with color-coded wires and complete 24-volt Electromechanical controls package.

» Units include single-point power entry as standard and also available with electric heat kits if selected.

» Terminal strip is provided as standard for easy installation and low voltage power wiring.

Filtration

Unit provides a draw-through filter section as standard for better air quality and long lasting component maintenance.

» Filters installed on the units are standard off the shelf sizes for easy replacement.

» Tool-less filter access for easy and fast filter replacement and service.

Heating Section

Wide range of electric heat selections effectively handle most comfort heating demand from morning warm-up control to full heat.

Electric Heat

ETL approved electric heat is factory assembled, installed and tested.

» Heating control is fully integrated into the unit's control system for quick start-up and reliable control.

» Durable low watt density, nickel chromium elements provide longer life (compared to units without).

» Fuses are provided in each branch circuit to a maximum of 48 Amps per NEC requirements.

» Single-point power connection reduces installation cost.

» For operational safeties electric heat includes automatic reset, and high temperature limit safety protection.

Electrical

Units are completely wired and tested at the factory to provide faster commissioning and start-up.

» Wiring complies with NEC requirements and all applicable UL standards.

» Units are factory-wired with color-coded wires and complete 24-volt electromechanical controls package.

» A 115 V GFI convenience receptacle requiring independent power supply for the receptacle is optional.

» An optional unit powered 20 amp 115 V convenience receptacle, complete with factory mounted transformer, disconnect switch, and primary and secondary overload protection, eliminates the need to pull a separate 115 V power source.

» Supply air fan, compressor, and condenser fan motor branch circuits have individual short circuit protection.

» A single-point power connection with power block is standard and a terminal strip is provided for connecting low voltage control wiring.

» For better serviceability an optional non-fused disconnect switch can be installed inside the control panel and operated by an externally mounted handle to disconnect the electrical power at the unit

DAIKIN

Applications

Daikin Rooftop units are intended for comfort cooling applications in normal heating, ventilating, and air conditioning. Consult your local Daikin sales representative for applications involving operations at high ambient temperatures, high altitudes, non-cataloged voltages, or for job-specific unit selections that fall outside of the range of the catalog tables.

For proper operation, units should be rigged in accordance with instructions stated on the installation manual. Fire dampers, if required, must be installed in the ductwork according to local and/or state codes. No space is allowed for these dampers in the unit.

Follow factory check, test and start procedures explicitly to achieve satisfactory start-up and operation.

Most rooftop applications take advantage of the significant energy savings provided with economizer operation. When an economizer system is used, mechanical refrigeration is typically not required below an ambient temperature of 50°F.

Serviceability

Daikin packaged rooftop units are built with serviceability in mind, designed to make future maintenance and service on the unit easy and accessible.

- Our packaged rooftop units offer a slide out blower to facilitate the access and removal of the fan.
- Filter panels offer tool-less access for easy maintenance.
- Independent compressors outside of the air bypass to eliminate component blockage and provide easy access.
- Color coded wire to identify point-to-point component connections.
- All 7.5-12.5 ton units are designed for convertible airflow orientation to serve downflow or horizontal applications. Every unit ships prepared to convert to horizontal orientation in the field if required.

Model	DSC0903D000001S	DSC0904D000001S	DSC0907D000001S
COOLING CAPACITY			
Total BTU/H	90,000	90,000	90,000
IEER / EER	16.0/12.0	16.0/12.0	16.0/12.0
SEER2 / EER2	N/A	N/A	N/A
AHRI Reference #			
EVAPORATOR MOTOR / RTPF (ROUND TUBE PLATE FIN)			
Motor Type	Direct Drive	Direct Drive	Direct Drive
External Static Pressure (ESP)	Standard	Standard	Standard
Wheel Dia. X Width	15x12	15x12	15x12
Indoor Nominal CFM	3020	3020	3020
RPM	300-1600	300-1600	300-1600
Indoor Horsepower	2.4	2.4	2.4
Filter Size (in)	20 X 20 X 2 (2) 20 X 25 X 2 (2)	20 X 20 X 2 (2) 20 X 25 X 2 (2)	20 X 20 X 2 (2) 20 X 25 X 2 (2)
Drain Size (NPT)	3/4	3/4	3/4
R-410A Refrigerant Charge (oz.) Cir #1 & 2	53/53	53/53	53/53
Evaporator Coil Face Area (ft^2)	13.4	13.4	13.4
Rows Deep/ Fins per Inch	2 / 16	2 / 16	2 / 16
CONDENSER FAN / MCHX (MICROCHANNEL HEAT EXCHANGER)			
Quantity of Condenser Fan Motors	2	2	2
RPM (High/Low stage)	1120	1050	1050
Outdoor Horsepower	1/3	1/3	1/3
Fan Diameter/ # Fan Blades	22 / 3	22 / 3	22 / 3
Face Area (ft^2)	29.1	29.1	29.1
Rows Deep / Fins per Inch	1 / 23	1 / 23	1 / 23
COMPRESSOR			
Quantity / Type / Stages per Compressor	2/ Scroll / 1	2/ Scroll / 1	2/ Scroll / 1
Compressor RLA / LRA	12.2/120	5.8/55.1	5.8/41
ELECTRICAL DATA			
Voltage-Phase-Frequency	208/230-3-60	460-3-60	575-3-60
Indoor Blower FLA	8	5.4	4.0
Max External Static (In. W.C.)	0.8	0.8	0.8
Outdoor Fan FLA	2	0.85	0.67
Min. Circuit Ampacity[1]	39.4/39.4	20.1	18.3
Max. Overcurrent Protection (A)[2]	50/50	25	20
Power Supply Conduit Hole Dia. (in)	1.375	1.375	1.375
Low-Voltage Conduit Hole Dia. (in)	0.5	0.5	0.5
OPERATING WEIGHT (LBS.)			
Operating Weight (lbs)	1015	1015	1015
SHIPPING WEIGHT (LBS.)			
Ship Weight (lbs)	1087	1087	1087

[1] Wire size should be determined in accordance with National Electrical Codes. Extensive wire runs will require larger wire sizes.
[2] May use fuses or HACR-type circuit breakers of the same size as noted.
Note: Always check the S&R plate for electrical data on the unit being installed.

Model	DSC1023D000001S	DSC1024D000001S	DSC1027D000001S
COOLING CAPACITY			
Total BTU/H	97,000	97,000	97,000
IEER / EER	15.5/11.4	15.5/11.4	15.5/11.4
SEER2 / EER2	N/A	N/A	N/A
AHRI Reference #			
EVAPORATOR MOTOR / RTPF (ROUND TUBE PLATE FIN)			
Motor Type	Direct Drive	Direct Drive	Direct Drive
External Static Pressure (ESP)	Standard	Standard	Standard
Wheel Dia. X Width	15x12	15x12	15x12
Indoor Nominal CFM	3230	3230	3230
RPM	300-1600	300-1600	300-1600
Indoor Horsepower	2.4	2.4	2.4
Filter Size (in)	20 X 20 X 2 (2) 20 X 25 X 2 (2)	20 X 20 X 2 (2) 20 X 25 X 2 (2)	20 X 20 X 2 (2) 20 X 25 X 2 (2)
Drain Size (NPT)	3/4	3/4	3/4
R-410A Refrigerant Charge (oz.) Cir #1 & 2	56/56	56/56	56/56
Evaporator Coil Face Area (ft^2)	13.4	13.4	13.4
Rows Deep/ Fins per Inch	2 / 16	2 / 16	2 / 16
CONDENSER FAN / MCHX (MICROCHANNEL HEAT EXCHANGER)			
Quantity of Condenser Fan Motors	2	2	2
RPM (High/Low stage)	1120	1050	1050
Outdoor Horsepower	1/3	1/3	1/3
Fan Diameter/ # Fan Blades	22 / 3	22 / 3	22 / 3
Face Area (ft^2)	29.1	29.1	29.1
Rows Deep / Fins per Inch	1 / 23	1 / 23	1 / 23
COMPRESSOR			
Quantity / Type / Stages per Compressor	2/ Scroll / 1	2/ Scroll / 1	2/ Scroll / 1
Compressor RLA / LRA	14.1/120	6.4/55.1	5.1/41
ELECTRICAL DATA			
Voltage-Phase-Frequency	208/230-3-60	460-3-60	575-3-60
Indoor Blower FLA	8	5.4	4.0
Max External Static (In. W.C.)	0.8	0.8	0.8
Outdoor Fan FLA	2	0.85	0.67
Min. Circuit Ampacity[1]	43.7/43.7	21.5	16.9
Max. Overcurrent Protection (A)[2]	50 / 50	25	20
Power Supply Conduit Hole Dia. (in)	1.375	1.375	1.375
Low-Voltage Conduit Hole Dia. (in)	0.5	0.5	0.5
OPERATING WEIGHT (LBS.)			
Operating Weight (lbs)	1027	1027	1027
SHIPPING WEIGHT (LBS.)			
Ship Weight (lbs)	1099	1099	1099

[1] Wire size should be determined in accordance with National Electrical Codes. Extensive wire runs will require larger wire sizes.
[2] May use fuses or HACR-type circuit breakers of the same size as noted.
Note: Always check the S&R plate for electrical data on the unit being installed.

Model	DSC1203D000001S	DSC1204D000001S	DSC1207D000001S
COOLING CAPACITY			
Total BTU/H	116,000	116,000	116,000
IEER / EER	15.2/11.4	15.2/11.4	15.2/11.4
SEER2 / EER2	N/A	N/A	N/A
AHRI Reference #			
EVAPORATOR MOTOR / RTPF (ROUND TUBE PLATE FIN)			
Motor Type	Direct Drive	Direct Drive	Direct Drive
External Static Pressure (ESP)	Standard	Standard	Standard
Wheel Dia. X Width	15x15	15x15	15x15
Indoor Nominal CFM	3380	3380	3380
RPM	300-1600	300-1600	300-1600
Indoor Horsepower	2.4	2.4	2.4
Filter Size (in)	20 X 25 X 2 (2) 25 X 25 X 2 (2)	20 X 25 X 2 (2) 25 X 25 X 2 (2)	20 X 25 X 2 (2) 25 X 25 X 2 (2)
Drain Size (NPT)	3/4	3/4	3/4
R-410A Refrigerant Charge (oz.) Cir #1 & 2	73/71	73/71	73/71
Evaporator Coil Face Area (ft^2)	16.2	16.2	16.2
Rows Deep/ Fins per Inch	3 / 16	3 / 16	3 / 16
CONDENSER FAN / MCHX (MICROCHANNEL HEAT EXCHANGER)			
Quantity of Condenser Fan Motors	2	2	2
RPM (High/Low stage)	1120	1050	1050
Outdoor Horsepower	1/3	1/3	1/3
Fan Diameter/ # Fan Blades	22 / 3	22 / 3	22 / 3
Face Area (ft^2)	29.1	29.1	29.1
Rows Deep / Fins per Inch	1 / 23	1 / 23	1 / 23
COMPRESSOR			
Quantity / Type / Stages per Compressor	2/ Scroll / 1	2/ Scroll / 1	2/ Scroll / 1
Compressor RLA / LRA	17.3/155	7.7/58.1	7.0/47.8
ELECTRICAL DATA			
Voltage-Phase-Frequency	208/230-3-60	460-3-60	575-3-60
Indoor Blower FLA	8	5.4	4.0
Max External Static (In. W.C.)	0.8	0.8	0.8
Outdoor Fan FLA	2	0.85	0.67
Min. Circuit Ampacity[1]	50.9/50.9	24.4	21.2
Max. Overcurrent Protection (A)[2]	60/60	30	25
Power Supply Conduit Hole Dia. (in)	1.375	1.375	1.375
Low-Voltage Conduit Hole Dia. (in)	0.5	0.5	0.5
OPERATING WEIGHT (LBS.)			
Operating Weight (lbs)	1070	1070	1070
SHIPPING WEIGHT (LBS.)			
Ship Weight (lbs)	1142	1142	1142

[1] Wire size should be determined in accordance with National Electrical Codes. Extensive wire runs will require larger wire sizes.
[2] May use fuses or HACR-type circuit breakers of the same size as noted.
Note: Always check the S&R plate for electrical data on the unit being installed.

Model	DSC1503D000001S	DSC1504D000001S	DSC1507D000001S
COOLING CAPACITY			
Total BTU/H	140,000	140,000	140,000
IEER / EER	15.2/11.4	15.2/11.4	15.2/11.4
SEER2 / EER2	N/A	N/A	N/A
AHRI Reference #			
EVAPORATOR MOTOR / RTPF (ROUND TUBE PLATE FIN)			
Motor Type	Direct Drive	Direct Drive	Direct Drive
External Static Pressure (ESP)	Standard	Standard	Standard
Wheel Dia. X Width	15x15	15x15	15x15
Indoor Nominal CFM	4200	4200	4200
RPM	300-1600	300-1600	300-1600
Indoor Horsepower	3.5	3.5	3.5
Filter Size (in)	20 X 25 X 2 (2) 25 X 25 X 2 (2)	20 X 25 X 2 (2) 25 X 25 X 2 (2)	20 X 25 X 2 (2) 25 X 25 X 2 (2)
Drain Size (NPT)	3/4	3/4	3/4
R-410A Refrigerant Charge (oz.) Cir #1 & 2	110/111	110/111	110/111
Evaporator Coil Face Area (ft^2)	16.2	16.2	16.2
Rows Deep/ Fins per Inch	4 / 16	4 / 16	4 / 16
CONDENSER FAN / MCHX (MICROCHANNEL HEAT EXCHANGER)			
Quantity of Condenser Fan Motors	2	2	2
RPM (High/Low stage)	1130	1115	1075
Outdoor Horsepower	1/2	1/2	1/2
Fan Diameter/ # Fan Blades	22 / 3	22 / 3	22 / 3
Face Area (ft^2)	40.8	40.8	40.8
Rows Deep / Fins per Inch	1 / 23	1 / 23	1 / 23
COMPRESSOR			
Quantity / Type / Stages per Compressor	2/ Scroll / 1	2/ Scroll / 1	2/ Scroll / 1
Compressor RLA / LRA	19.2/157	9.0/74.8	7.0/53.9
ELECTRICAL DATA			
Voltage-Phase-Frequency	208/230-3-60	460-3-60	575-3-60
Indoor Blower FLA	10.9	7.2	5.0
Max External Static (In. W.C.)	0.8	0.8	0.8
Outdoor Fan FLA	2.7	1.4	1
Min. Circuit Ampacity[1]	59.5/59.5	30.2	22.8
Max. Overcurrent Protection (A)[2]	70/70	35	25
Power Supply Conduit Hole Dia. (in)	1.375	1.375	1.375
Low-Voltage Conduit Hole Dia. (in)	0.5	0.5	0.5
OPERATING WEIGHT (LBS.)			
Operating Weight (lbs)	1153	1153	1153
SHIPPING WEIGHT (LBS.)			
Ship Weight (lbs)	1225	1225	1225

[1] Wire size should be determined in accordance with National Electrical Codes. Extensive wire runs will require larger wire sizes.
[2] May use fuses or HACR-type circuit breakers of the same size as noted.
Note: Always check the S&R plate for electrical data on the unit being installed.

Model	DSC1503W000001F	DSC1504W000001F	DSC1507W000001F
COOLING CAPACITY			
Total BTU/H	140,000	140,000	140,000
IEER / EER	15.2/11.4	15.2/11.4	15.2/11.4
SEER2 / EER2	N/A	N/A	N/A
AHRI Reference #			
EVAPORATOR MOTOR / RTPF (ROUND TUBE PLATE FIN)			
Motor Type	Direct Drive	Direct Drive	Direct Drive
External Static Pressure (ESP)	High	High	High
Wheel Dia. X Width	15x15	15x15	15x15
Indoor Nominal CFM	4200	4200	4200
RPM	300-1600	300-1600	300-1600
Indoor Horsepower	5.0	5.0	5.0
Filter Size (in)	20 X 25 X 2 (2) 25 X 25 X 2 (2)	20 X 25 X 2 (2) 25 X 25 X 2 (2)	20 X 25 X 2 (2) 25 X 25 X 2 (2)
Drain Size (NPT)	3/4	3/4	3/4
R-410A Refrigerant Charge (oz.) Cir #1 & 2	110/111	110/111	110/111
Evaporator Coil Face Area (ft^2)	16.2	16.2	16.2
Rows Deep/ Fins per Inch	4/ 16	4/ 16	4/ 16
CONDENSER FAN / MCHX (MICROCHANNEL HEAT EXCHANGER)			
Quantity of Condenser Fan Motors	2	2	2
RPM (High/Low stage)	1130	1115	1075
Outdoor Horsepower	1/2	1/2	1/2
Fan Diameter/ # Fan Blades	22 / 3	22 / 3	22 / 3
Face Area (ft^2)	40.8	40.8	40.8
Rows Deep / Fins per Inch	1 / 23	1 / 23	1 / 23
COMPRESSOR			
Quantity / Type / Stages per Compressor	2/ Scroll / 1	2/ Scroll / 1	2/ Scroll / 1
Compressor RLA / LRA	19.2/157	9.0/74.8	7.0/53.9
ELECTRICAL DATA			
Voltage-Phase-Frequency	208/230-3-60	460-3-60	575-3-60
Indoor Blower FLA	14.5	10.6	7.2
Max External Static (In. W.C.)	1.8	1.8	1.8
Outdoor Fan FLA	2.7	1.4	1
Min. Circuit Ampacity[1]	63.1/63.1	33.6	25
Max. Overcurrent Protection (A)[2]	80/80	40	30
Power Supply Conduit Hole Dia. (in)	1.375	1.375	1.375
Low-Voltage Conduit Hole Dia. (in)	0.5	0.5	0.5
OPERATING WEIGHT (LBS.)			
Operating Weight (lbs)	1153	1153	1153
SHIPPING WEIGHT (LBS.)			
Ship Weight (lbs)	1225	1225	1225

[1] Wire size should be determined in accordance with National Electrical Codes. Extensive wire runs will require larger wire sizes.
[2] May use fuses or HACR-type circuit breakers of the same size as noted.
Note: Always check the S&R plate for electrical data on the unit being installed.

Coil Dimensions

	Indoor			Outdoor		
Tons	Fin height in.	Fin length in.	Area (Ft^2)	Fin height in.	Fin length in.	Area (Ft^2)
7.5	42.0	46.0	13.4	45.6	46.0	29.1
8.5	42.0	46.0	13.4	45.6	45.9	29.1
10	45.0	51.8	16.2	45.6	45.9	29.1
12.5	45.0	51.8	16.2	48.6	60.4	40.8

AHRI Ratings

Model	Cooling Capacity (BTU/hr)	EER	IEER
DSC0903D	90,000	12.0	16
DSC0904D	90,000	12.0	16
DSC0907D	90,000	12.0	16
DSC1023D	97,000	11.4	15.5
DSC1024D	97,000	11.4	15.5
DSC1027D	97,000	11.4	15.5
DSC1203D	116,000	11.4	15.2
DSC1204D	116,000	11.4	15.2
DSC1207D	116,000	11.4	15.2
DSC1503D	140,000	11.4	15.2
DSC1504D	140,000	11.4	15.2
DSC1507D	140,000	11.4	15.2

Sound Data

Static Pressure	7.5 Ton Sound (DB) at 60 Hz										
	Indoor CFM	Component	A-Weighted	63	125	250	500	1000	2000	4000	8000
0.8	3,000	Discharge	68.7	92.1	76.0	63.9	62.6	62.1	57.2	56.3	46.4
		Inlet	63.8	87.9	72.4	64.4	58.2	52.2	46.9	47.1	46.3
1.4		Discharge	78.3	98.6	87.0	72.2	72.7	72.8	68.5	66.7	60.8
		Inlet	70.2	90.7	80.7	69.6	64.6	61.7	56.6	56.5	53
2.0		Discharge	82.4	97.6	88.4	85	77.1	77.1	72.5	71.7	67.3
		Inlet	74.8	92.6	84.0	78.2	69.9	66.5	61.8	62.1	58.4
N/A	N/A	Outdoor	82.6	89.2	86.0	83.1	79.2	77.3	74.2	69.6	67.7

Static Pressure	8.5 Ton Sound (DB) at 60 Hz										
	Indoor CFM	Component	A-Weighted	63	125	250	500	1000	2000	4000	8000
0.8	3,400	Discharge	71.3	93.5	79.9	65.3	66.0	65.1	60.8	58.1	49.9
		Inlet	65.3	87.0	75.8	66.8	59.7	54.6	49.8	49.2	47.0
1.4		Discharge	81.5	99.6	88.8	78.8	76.4	76.6	71.5	70.3	64.9
		Inlet	73.1	91.4	82.8	74.6	67.4	66.2	60.0	60.5	56.7
2.0		Discharge	80.8	99.7	89.4	76.1	75.2	75.5	71.4	69.7	65.3
		Inlet	72.7	92.5	82.6	73.6	66.9	64.3	59.5	59.5	56.0
N/A	N/A	Outdoor	82.6	89.2	86.0	83.1	79.2	77.3	74.2	69.6	67.7

Static Pressure	10 Ton Sound (DB) at 60 Hz										
	Indoor CFM	Component	A-Weighted	63	125	250	500	1000	2000	4000	8000
0.8	4,000	Discharge	74.5	92.3	82.2	71.0	70.8	69.0	64.1	65.6	55.6
		Inlet	67.2	88.8	76.6	66.8	62.2	58.5	54.7	52.4	47.4
1.4		Discharge	76.8	95.8	85.3	72.2	71.7	71.2	67.3	65.2	59.8
		Inlet	69.2	89.5	79.3	68.8	63.9	60.6	57.1	55.5	50.5
2.0		Discharge	77.1	96.2	85.3	72.5	72.0	71.5	67.6	65.3	59.9
		Inlet	71.0	91.7	81.2	70.8	65.2	62.0	58.8	57.4	53.1
N/A	N/A	Outdoor	82.6	89.2	86.0	83.1	79.2	77.3	74.2	69.6	67.7

Static Pressure	12.5 Ton Sound (DB) at 60 Hz										
	Indoor CFM	Component	A-Weighted	63	125	250	500	1000	2000	4000	8000
0.8	5,000	Discharge	78.5	92.6	82.0	73.2	74.2	74.5	69.4	68.6	63.2
		Inlet	70.1	92.3	78.8	68.7	64.0	62.2	57.7	57.3	52.2
1.4		Discharge	79.5	93.1	84.7	77.1	74.9	75.4	69.9	68.9	63.8
		Inlet	72.0	91.9	52.6	72.5	66.4	63.8	59.5	58.8	53.8
2.0		Discharge	82.4	100.4	90.1	78.2	77.3	77.2	72.9	71.1	66.7
		Inlet	73.4	93.2	84.0	73.1	67.9	65.0	61.4	60.7	56.0
N/A	N/A	Outdoor	86.8	95.4	85.3	86.8	83.3	81.7	79.8	72.2	66.9

[1] Outdoor sound data is measured in accordance with AHRI standard 270

[2] Discharge and Inlet sound data was measured in accordanced with AHRI standard 260.

[3] Measurements are expressed in terms of sound power. Do not compare these values to sound pressure values because sound pressure depends on specific environment factors which normally do not match individual applications. Sound power values are independent of the environment and therefore more accurate.

[4] A-weighted sound ratings filter out high and very low frequencies, to better approximate the response of "average" human ear. A-weighted measurements for Daikin units are taken in accordance with AHRI standards 260 and 270.

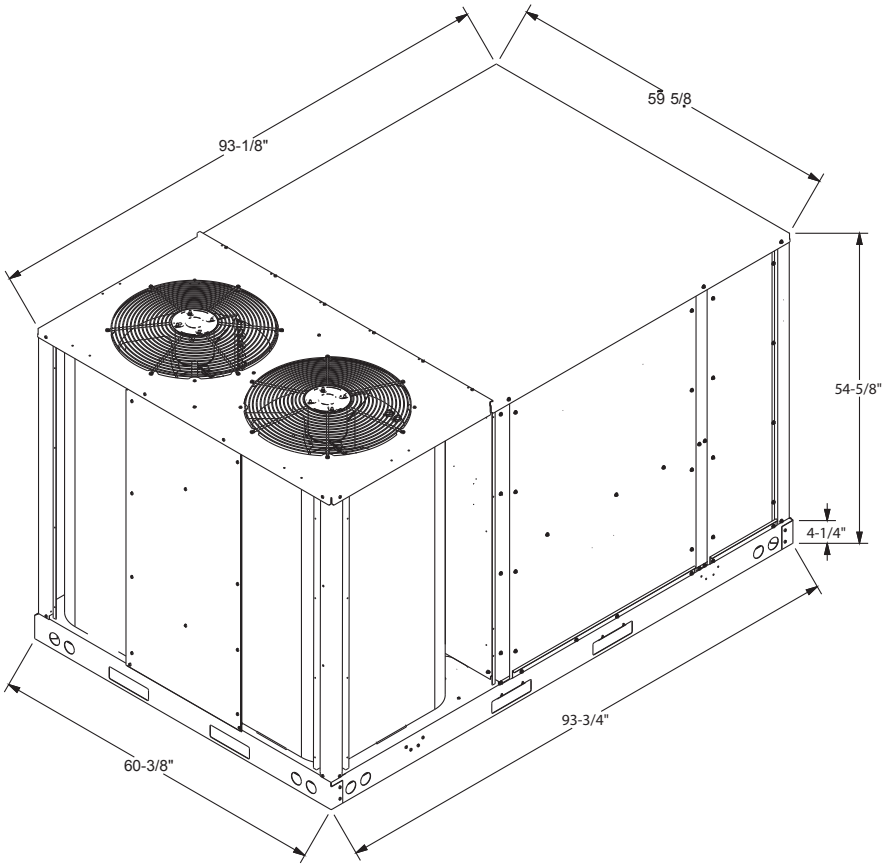

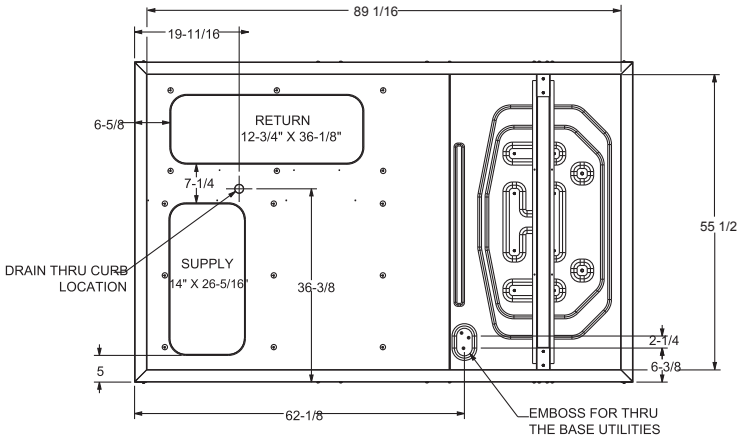

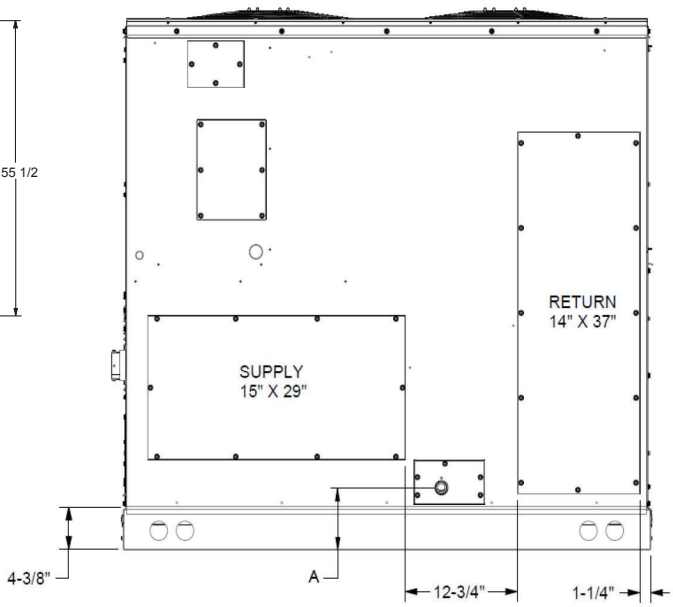

UNIT	DIM "A"
DSC 090	9"
DSC 102	9"
DSC 120	6½"
DSC 150	6½"

			Outdoor Ambient Temperature																							
			65				75				85				95				105				115			
			Entering Indoor Wet Bulb Temperature																							
IDB	Airflow	ID WB	59	63	67	71	59	63	67	71	59	63	67	71	59	63	67	71	59	63	67	71	59	63	67	71
70	2625	Capacity	91,565	92,858	95,593		90,745	92,038	94,774		88,354	89,647	92,383		84,240	85,534	88,269		79,213	80,506	83,242		74,623	75,917	78,652	
		S/T	0.60	0.52	0.39		0.60	0.53	0.40		1.00	0.55	0.42		1.00	0.57	0.44		1.00	0.60	0.46		1.00	1.00	0.51	
		Evap dT	18.78	17.04	13.80		18.73	17.00	13.75		18.98	17.24	14.00		18.72	16.98	13.74		18.48	16.75	13.50		19.57	17.83	14.59	
		Pr Suc	132.94	134.58	137.97		141.03	142.67	146.05		148.11	149.75	153.14		154.10	155.74	159.13		159.98	161.62	165.00		167.34	168.98	172.36	
		Pr Dis	260.01	261.14	262.97		301.04	302.17	303.99		344.02	345.15	346.98		390.31	391.43	393.26		440.21	441.34	443.16		493.46	494.59	496.42	
		ODAmps	21.25	21.23	21.18		24.17	24.15	24.10		27.43	27.41	27.36		30.96	30.94	30.89		34.90	34.88	34.83		39.52	39.50	39.45	
		TotalPower	5,420	5,415	5,404		6,058	6,053	6,042		6,770	6,765	6,755		7,541	7,536	7,525		8,402	8,397	8,386		9,413	9,408	9,397	
	3000	Capacity	92,767	94,061	96,796		91,948	93,241	95,976		89,557	90,850	93,585		85,443	86,736	89,472		80,416	81,709	84,444		75,826	77,119	79,855	
		S/T	0.66	0.58	0.45		0.66	0.59	0.45		1.00	0.61	0.48		1.00	0.63	0.50		1.00	1.00	0.52		1.00	1.00	0.57	
		Evap dT	17.73	16.00	12.75		17.68	15.95	12.70		17.93	16.19	12.95		17.67	15.93	12.69		17.44	15.70	12.45		18.52	16.79	13.54	
		Pr Suc	134.89	136.54	139.92		142.98	144.62	148.01		150.07	151.71	155.09		156.05	157.70	161.08		161.93	163.57	166.96		169.29	170.93	174.32	
		Pr Dis	262.22	263.35	265.17		303.25	304.38	306.20		346.23	347.36	349.19		392.52	393.64	395.47		442.42	443.55	445.37		495.67	496.80	498.63	
		ODAmps	21.40	21.38	21.33		24.32	24.30	24.25		27.58	27.56	27.51		31.11	31.09	31.04		35.05	35.03	34.98		39.68	39.65	39.60	
		TotalPower	5,453	5,448	5,437		6,091	6,086	6,075		6,804	6,799	6,788		7,574	7,569	7,558		8,435	8,430	8,419		9,446	9,441	9,430	
	3375	Capacity	94,212	95,505	98,241		93,392	94,686	97,421		91,001	92,295	95,030		86,888	88,181	90,916		81,860	83,154	85,889		77,271	78,564	81,299	
		S/T	0.69	0.62	0.48		1.00	0.62	0.49		1.00	0.65	0.51		1.00	0.67	0.53		1.00	1.00	0.55		1.00	1.00	0.61	
		Evap dT	16.85	15.11	11.87		16.80	15.06	11.82		17.05	15.31	12.07		16.78	15.05	11.80		16.55	14.81	11.57		17.64	15.90	12.66	
		Pr Suc	137.06	138.70	142.09		145.15	146.79	150.17		152.23	153.87	157.26		158.22	159.86	163.25		164.10	165.74	169.12		171.46	173.10	176.48	
		Pr Dis	264.36	265.49	267.32		305.39	306.52	308.35		348.37	349.50	351.33		394.66	395.79	397.61		444.56	445.69	447.52		497.82	498.94	500.77	
		ODAmps	21.53	21.51	21.46		24.45	24.43	24.38		27.71	27.69	27.64		31.24	31.22	31.17		35.18	35.16	35.11		39.80	39.78	39.73	
		TotalPower	5,481	5,476	5,465		6,119	6,114	6,103		6,831	6,826	6,815		7,602	7,597	7,586		8,463	8,458	8,447		9,473	9,468	9,458	
75	2625	Capacity	91,618	92,911	95,647	99,825	90,798	92,092	94,827	99,005	88,407	89,701	92,436	96,614	84,294	85,587	88,322	92,501	79,266	80,560	83,295	87,473	74,677	75,970	78,705	82,883
		S/T	0.73	0.65	0.52	0.38	1.00	0.66	0.52	0.38	1.00	0.68	0.55	0.41	1.00	1.00	0.57	0.43	1.00	1.00	0.59	0.45	1.00	1.00	0.64	0.50
		Evap dT	22.60	20.86	17.62	14.26	22.55	20.82	17.57	14.21	22.80	21.06	17.82	14.46	22.54	20.80	17.56	14.20	22.30	20.57	17.32	13.96	23.39	21.65	18.41	15.05
		Pr Suc	132.97	134.61	138.00	143.66	141.06	142.70	146.08	151.75	148.14	149.78	153.17	158.83	154.13	155.77	159.16	164.82	160.01	161.65	165.04	170.70	167.37	169.01	172.40	178.06
		Pr Dis	260.24	261.37	263.20	267.73	301.27	302.40	304.22	308.76	344.25	345.38	347.21	351.74	390.54	391.66	393.49	398.02	440.44	441.57	443.39	447.93	493.69	494.82	496.65	501.18
		ODAmps	21.23	21.21	21.16	21.38	24.15	24.13	24.08	24.30	27.41	27.39	27.34	27.56	30.94	30.92	30.87	31.09	34.88	34.86	34.81	35.03	39.51	39.48	39.43	39.66
		TotalPower	5,416	5,411	5,400	5,449	6,054	6,049	6,038	6,087	6,766	6,761	6,750	6,799	7,537	7,532	7,521	7,570	8,398	8,393	8,382	8,431	9,408	9,403	9,393	9,441
	3000	Capacity	92,821	94,114	96,849	101,028	92,001	93,295	96,030	100,208	89,610	90,904	93,639	97,817	85,497	86,790	89,525	93,703	80,469	81,762	84,498	88,676	75,879	77,173	79,908	84,086
		S/T	1.00	0.71	0.58	0.44	1.00	0.72	0.58	0.44	1.00	0.74	0.61	0.47	1.00	1.00	0.63	0.49	1.00	1.00	0.65	0.51	1.00	1.00	0.70	0.56
		Evap dT	21.55	19.81	16.57	13.21	21.50	19.77	16.52	13.16	21.75	20.01	16.77	13.41	21.49	19.75	16.51	13.15	21.25	19.52	16.27	12.91	22.34	20.60	17.36	14.00
		Pr Suc	134.92	136.57	139.95	145.61	143.01	144.66	148.04	153.70	150.10	151.74	155.12	160.79	156.09	157.73	161.11	166.77	161.96	163.61	166.99	172.65	169.32	170.97	174.35	180.01
		Pr Dis	262.45	263.58	265.40	269.94	303.48	304.61	306.43	310.97	346.46	347.59	349.42	353.95	392.75	393.87	395.70	400.23	442.65	443.78	445.60	450.14	495.90	497.03	498.86	503.39
		ODAmps	21.39	21.36	21.31	21.54	24.31	24.28	24.23	24.46	27.57	27.54	27.49	27.72	31.09	31.07	31.02	31.24	35.03	35.01	34.96	35.18	39.66	39.63	39.58	39.81
		TotalPower	5,449	5,444	5,433	5,482	6,087	6,082	6,071	6,120	6,799	6,794	6,783	6,832	7,570	7,565	7,554	7,603	8,431	8,426	8,415	8,464	9,442	9,437	9,426	9,474
	3375	Capacity	94,265	95,559	98,294	102,472	93,446	94,739	97,474	101,653	91,055	92,348	95,083	99,262	86,941	88,234	90,970	95,148	81,914	83,207	85,942	90,120	77,324	78,617	81,353	85,531
		S/T	1.00	0.74	0.61	0.47	1.00	0.75	0.62	0.47	1.00	0.77	0.64	0.50	1.00	1.00	0.66	0.52	1.00	1.00	0.68	0.54	1.00	1.00	1.00	0.59
		Evap dT	20.67	18.93	15.69	12.33	20.62	18.88	15.64	12.28	20.86	19.13	15.88	12.52	20.60	18.87	15.62	12.26	20.37	18.63	15.39	12.03	21.46	19.72	16.48	13.12
		Pr Suc	137.09	138.73	142.12	147.78	145.18	146.82	150.21	155.87	152.26	153.90	157.29	162.95	158.25	159.89	163.28	168.94	164.13	165.77	169.16	174.82	171.49	173.13	176.52	182.18
		Pr Dis	264.59	265.72	267.55	272.08	305.62	306.75	308.58	313.11	348.60	349.73	351.56	356.09	394.89	396.02	397.84	402.38	444.79	445.92	447.75	452.28	498.05	499.17	501.00	505.53
		ODAmps	21.51	21.49	21.44	21.66	24.43	24.41	24.36	24.58	27.69	27.67	27.62	27.84	31.22	31.20	31.15	31.37	35.16	35.14	35.09	35.31	39.78	39.76	39.71	39.93
		TotalPower	5,477	5,472	5,461	5,510	6,115	6,110	6,099	6,148	6,827	6,822	6,811	6,860	7,598	7,593	7,582	7,631	8,459	8,454	8,443	8,492	9,469	9,464	9,453	9,502

IDB: Entering Indoor Dry Bulb Temperature Shaded area reflects ACCA (TVA) conditions **kW = Total system power**

High and low pressures are measured at the liquid and suction access fittings. **Amps: Unit amps (comp.+ evaporator + condenser fan motors)**

Design Subcooling, 16 - 19 °F @ the liquid access fitting connection ARI 95 test conditions. Design Superheat 8 - 12°F @ the compressor suction access fitting connection.

			Outdoor Ambient Temperature																							
			65				75				85				95				105				115			
			Entering Indoor Wet Bulb Temperature																							
IDB	Airflow	ID WB	59	63	67	71	59	63	67	71	59	63	67	71	59	63	67	71	59	63	67	71	59	63	67	71
80	2625	Capacity	92,092	93,386	96,121	100,299	91,273	92,566	95,301	99,480	88,882	90,175	92,910	97,089	84,768	86,061	88,797	92,975	79,741	81,034	83,769	87,947	75,151	76,444	79,180	83,358
		S/T	1.00	0.77	0.64	0.50	1.00	0.78	0.65	0.51	1.00	1.00	0.67	0.53	1.00	1.00	0.69	0.55	1.00	1.00	0.71	0.57	1.00	1.00	1.00	0.62
		Evap dT	26.45	24.71	21.47	18.11	26.40	24.66	21.42	18.06	26.64	24.91	21.66	18.30	26.38	24.64	21.40	18.04	26.15	24.41	21.17	17.81	27.24	25.50	22.26	18.90
		Pr Suc	133.56	135.20	138.58	144.25	141.65	143.29	146.67	152.33	148.73	150.37	153.76	159.42	154.72	156.36	159.75	165.41	160.60	162.24	165.62	171.28	167.96	169.60	172.98	178.64
		Pr Dis	260.72	261.85	263.67	268.21	301.75	302.88	304.70	309.24	344.73	345.86	347.69	352.22	391.01	392.14	393.97	398.50	440.92	442.04	443.87	448.41	494.17	495.30	497.13	501.66
		ODAmps	21.25	21.23	21.18	21.40	24.17	24.15	24.10	24.32	27.43	27.41	27.36	27.58	30.96	30.93	30.88	31.11	34.90	34.87	34.82	35.05	39.52	39.50	39.45	39.67
		TotalPower	5,419	5,414	5,404	5,452	6,057	6,052	6,042	6,090	6,770	6,765	6,754	6,803	7,540	7,535	7,524	7,573	8,402	8,397	8,386	8,434	9,412	9,407	9,396	9,445
	3000	Capacity	93,295	94,588	97,324	101,502	92,476	93,769	96,504	100,682	90,085	91,378	94,113	98,291	85,971	87,264	**89,999**	94,178	80,943	82,237	84,972	89,150	76,354	77,647	80,382	84,561
		S/T	1.00	0.83	0.70	0.56	1.00	0.84	0.71	0.57	1.00	1.00	0.73	0.59	1.00	1.00	**0.75**	0.61	1.00	1.00	1.00	0.63	1.00	1.00	1.00	0.68
		Evap dT	25.40	23.66	20.42	17.06	25.35	23.61	20.37	17.01	25.59	23.86	20.61	17.25	25.33	23.59	**20.35**	16.99	25.10	23.36	20.12	16.76	26.19	24.45	21.21	17.85
		Pr Suc	135.51	137.15	140.54	146.20	143.60	145.24	148.63	154.29	150.68	152.33	155.71	161.37	156.67	158.32	**161.70**	167.36	162.55	164.19	167.58	173.24	169.91	171.55	174.94	180.60
		Pr Dis	262.93	264.05	265.88	270.42	303.96	305.08	306.91	311.44	346.94	348.07	349.90	354.43	393.22	394.35	**396.18**	400.71	443.13	444.25	446.08	450.61	496.38	497.51	499.34	503.87
		ODAmps	21.40	21.38	21.33	21.55	24.32	24.30	24.25	24.47	27.58	27.56	27.51	27.73	31.11	31.09	**31.04**	31.26	35.05	35.03	34.98	35.20	39.67	39.65	39.60	39.82
		TotalPower	5,453	5,448	5,437	5,485	6,091	6,086	6,075	6,123	6,803	6,798	6,787	6,836	7,573	7,568	**7,558**	7,606	8,435	8,430	8,419	8,467	9,445	9,440	9,429	9,478
	3375	Capacity	94,740	96,033	98,768	102,947	93,920	95,213	97,949	102,127	91,529	92,822	95,558	99,736	87,416	88,709	91,444	95,622	82,388	83,681	86,417	90,595	77,798	79,092	81,827	86,005
		S/T	1.00	0.87	0.73	0.59	1.00	1.00	0.74	0.60	1.00	1.00	0.76	0.62	1.00	1.00	0.78	0.64	1.00	1.00	1.00	0.66	1.00	1.00	1.00	0.72
		Evap dT	24.51	22.78	19.53	16.17	24.47	22.73	19.49	16.13	24.71	22.97	19.73	16.37	24.45	22.71	19.47	16.11	24.22	22.48	19.24	15.88	25.30	23.57	20.32	16.96
		Pr Suc	137.68	139.32	142.70	148.37	145.77	147.41	150.79	156.45	152.85	154.49	157.88	163.54	158.84	160.48	163.87	169.53	164.72	166.36	169.74	175.41	172.08	173.72	177.10	182.77
		Pr Dis	265.07	266.20	268.03	272.56	306.10	307.23	309.06	313.59	349.08	350.21	352.04	356.57	395.37	396.50	398.32	402.86	445.27	446.40	448.23	452.76	498.52	499.65	501.48	506.01
		ODAmps	21.53	21.51	21.46	21.68	24.45	24.43	24.38	24.60	27.71	27.68	27.63	27.86	31.23	31.21	31.16	31.39	35.18	35.15	35.10	35.33	39.80	39.78	39.73	39.95
		TotalPower	5,480	5,475	5,464	5,513	6,118	6,113	6,102	6,151	6,831	6,826	6,815	6,863	7,601	7,596	7,585	7,634	8,462	8,457	8,446	8,495	9,473	9,468	9,457	9,506
85	2625	Capacity	93,635	94,929	97,664	101,842	92,816	94,109	96,844	101,022	90,425	91,718	94,453	98,631	86,311	87,604	90,340	94,518	81,284	82,577	85,312	89,490	76,694	77,987	80,722	84,901
		S/T	1.00	1.00	0.74	0.60	1.00	1.00	0.75	0.61	1.00	1.00	0.77	0.63	1.00	1.00	1.00	0.65	1.00	1.00	1.00	0.67	1.00	1.00	1.00	1.00
		Evap dT	29.86	28.12	24.88	21.52	29.81	28.07	24.83	21.47	30.05	28.32	25.07	21.71	29.79	28.05	24.81	21.45	29.56	27.82	24.58	21.22	30.65	28.91	25.67	22.31
		Pr Suc	135.55	137.19	140.58	146.24	143.64	145.28	148.67	154.33	150.72	152.36	155.75	161.41	156.71	158.35	161.74	167.40	162.59	164.23	167.62	173.28	169.95	171.59	174.98	180.64
		Pr Dis	261.94	263.07	264.90	269.43	302.97	304.10	305.93	310.46	345.95	347.08	348.91	353.44	392.24	393.37	395.19	399.73	442.14	443.27	445.10	449.63	495.39	496.52	498.35	502.88
		ODAmps	21.31	21.28	21.23	21.46	24.23	24.20	24.15	24.38	27.49	27.46	27.41	27.64	31.01	30.99	30.94	31.16	34.95	34.93	34.88	35.10	39.58	39.55	39.50	39.73
		TotalPower	5,432	5,427	5,416	5,465	6,070	6,065	6,054	6,103	6,782	6,777	6,766	6,815	7,553	7,548	7,537	7,585	8,414	8,409	8,398	8,447	9,424	9,419	9,408	9,457
	3000	Capacity	94,838	96,131	98,867	103,045	94,018	95,312	98,047	102,225	91,627	92,921	95,656	99,834	87,514	88,807	91,542	95,720	82,486	83,780	86,515	90,693	77,897	79,190	81,925	86,103
		S/T	1.00	1.00	0.80	0.66	1.00	1.00	0.81	0.67	1.00	1.00	0.83	0.69	1.00	1.00	1.00	0.71	1.00	1.00	1.00	0.73	1.000	1.000	1.000	1.000
		Evap dT	28.81	27.07	23.83	20.47	28.76	27.02	23.78	20.42	29.00	27.27	24.02	20.66	28.74	27.00	23.76	20.40	28.51	26.77	23.53	20.17	29.60	27.86	24.62	21.26
		Pr Suc	137.51	139.15	142.53	148.19	145.59	147.24	150.62	156.28	152.68	154.32	157.70	163.37	158.67	160.31	163.69	169.36	164.54	166.19	169.57	175.23	171.90	173.55	176.93	182.59
		Pr Dis	264.15	265.28	267.11	271.64	305.18	306.31	308.14	312.67	348.16	349.29	351.12	355.65	394.45	395.57	397.40	401.94	444.35	445.48	447.31	451.84	497.60	498.73	500.56	505.09
		ODAmps	21.46	21.43	21.38	21.61	24.38	24.35	24.30	24.53	27.64	27.61	27.56	27.79	31.16	31.14	31.09	31.31	35.10	35.08	35.03	35.26	39.73	39.71	39.66	39.88
		TotalPower	5,465	5,460	5,449	5,498	6,103	6,098	6,087	6,136	6,815	6,810	6,799	6,848	7,586	7,581	7,570	7,619	8,447	8,442	8,431	8,480	9,457	9,452	9,441	9,490
	3375	Capacity	96,283	97,576	100,311	104,489	95,463	96,756	99,492	103,670	93,072	94,365	97,101	101,279	88,958	90,252	92,987	97,165	83,931	85,224	87,959	92,138	79,341	80,635	83,370	87,548
		S/T	1.00	1.00	0.83	0.69	1.00	1.00	0.84	0.70	1.00	1.00	1.00	0.72	1.00	1.00	1.00	0.74	1.00	1.00	1.00	0.76	1.00	1.00	1.00	1.00
		Evap dT	27.92	26.19	22.94	19.58	27.88	26.14	22.90	19.54	28.12	26.38	23.14	19.78	27.86	26.12	22.88	19.52	27.63	25.89	22.65	19.29	28.71	26.98	23.73	20.37
		Pr Suc	139.67	141.31	144.70	150.36	147.76	149.40	152.79	158.45	154.84	156.48	159.87	165.53	160.83	162.47	165.86	171.52	166.71	168.35	171.74	177.40	174.07	175.71	179.10	184.76
		Pr Dis	266.29	267.42	269.25	273.78	307.32	308.45	310.28	314.81	350.31	351.43	353.26	357.79	396.59	397.72	399.55	404.08	446.49	447.62	449.45	453.98	499.75	500.87	502.70	507.24
		ODAmps	21.58	21.56	21.51	21.73	24.50	24.48	24.43	24.65	27.76	27.74	27.69	27.91	31.29	31.27	31.22	31.44	35.23	35.21	35.16	35.38	39.86	39.83	39.78	40.01
		TotalPower	5,493	5,487	5,477	5,525	6,131	6,126	6,115	6,163	6,843	6,838	6,827	6,876	7,613	7,608	7,598	7,646	8,475	8,470	8,459	8,507	9,485	9,480	9,469	9,518

IDB: Entering Indoor Dry Bulb Temperature Shaded area reflects ACCA (TVA) conditions **kW = Total system power**

High and low pressures are measured at the liquid and suction access fittings. **Amps: Unit amps (comp.+ evaporator + condenser fan motors)**

Design Subcooling, 16 - 19 °F @ the liquid access fitting connection ARI 95 test conditions. Design Superheat 8 - 12°F @ the compressor suction access fitting connection.

			Outdoor Ambient Temperature																							
			65				75				85				95				105				115			
			Entering Indoor Wet Bulb Temperature																							
IDB	Airflow	ID WB	59	63	67	71	59	63	67	71	59	63	67	71	59	63	67	71	59	63	67	71	59	63	67	71
70	2975	Capacity	99,225	100,619	103,567		98,342	99,736	102,684		95,765	97,159	100,107		91,331	92,725	95,673		85,913	87,307	90,255		80,966	82,360	85,308	
		S/T	0.62	0.54	0.41		0.62	0.55	0.42		1.00	0.57	0.44		1.00	0.59	0.46		1.00	0.62	0.48		1.00	1.00	0.53	
		Evap dT	18.30	16.56	13.32		18.25	16.51	13.27		18.49	16.76	13.51		18.23	16.49	13.25		18.00	16.26	13.02		19.09	17.35	14.11	
		Pr Suc	129.58	131.17	134.45		137.41	139.00	142.28		144.27	145.86	149.14		150.07	151.66	154.94		155.77	157.36	160.64		162.89	164.49	167.76	
		Pr Dis	265.90	267.05	268.91		307.70	308.85	310.71		351.49	352.64	354.51		398.65	399.80	401.66		449.49	450.64	452.50		503.75	504.89	506.76	
		ODAmps	24.38	24.36	24.30		27.55	27.53	27.47		31.09	31.06	31.01		34.92	34.89	34.84		39.19	39.17	39.11		44.21	44.19	44.13	
		TotalPower	6,269	6,263	6,251		6,961	6,955	6,944		7,734	7,728	7,716		8,570	8,565	8,553		9,505	9,499	9,487		10,601	10,595	10,584	
	3200	Capacity	99,983	101,377	104,325		99,099	100,493	103,441		96,522	97,916	100,864		92,089	93,483	96,431		86,670	88,064	91,012		81,724	83,118	86,066	
		S/T	0.65	0.57	0.44		0.65	0.58	0.45		1.00	0.60	0.47		1.00	0.62	0.49		1.00	0.64	0.51		1.00	1.00	0.56	
		Evap dT	17.73	16.00	12.75		17.68	15.95	12.70		17.93	16.19	12.95		17.67	15.93	12.69		17.44	15.70	12.45		18.52	16.79	13.54	
		Pr Suc	130.66	132.25	135.53		138.49	140.08	143.36		145.36	146.95	150.22		151.16	152.75	156.03		156.85	158.44	161.72		163.98	165.57	168.85	
		Pr Dis	267.15	268.30	270.16		308.95	310.10	311.96		352.74	353.89	355.75		399.90	401.05	402.91		450.74	451.89	453.75		504.99	506.14	508.01	
		ODAmps	24.47	24.45	24.39		27.64	27.62	27.56		31.18	31.15	31.10		35.00	34.98	34.93		39.28	39.26	39.20		44.30	44.27	44.22	
		TotalPower	6,288	6,282	6,271		6,980	6,975	6,963		7,753	7,748	7,736		8,589	8,584	8,572		9,524	9,518	9,507		10,620	10,615	10,603	
	3825	Capacity	102,550	103,944	106,892		101,667	103,061	106,009		99,090	100,484	103,432		94,656	96,050	98,998		89,238	90,632	93,580		84,291	85,685	88,633	
		S/T	0.69	0.62	0.48		0.70	0.62	0.49		1.00	0.65	0.51		1.00	0.66	0.53		1.00	0.69	0.55		1.00	1.00	0.60	
		Evap dT	16.40	14.66	11.42		16.35	14.61	11.37		16.60	14.86	11.62		16.33	14.60	11.35		16.10	14.36	11.12		17.19	15.45	12.21	
		Pr Suc	134.06	135.65	138.93		141.89	143.48	146.76		148.75	150.35	153.62		154.56	156.15	159.43		160.25	161.84	165.12		167.38	168.97	172.25	
		Pr Dis	270.58	271.73	273.59		312.38	313.53	315.39		356.17	357.32	359.18		403.33	404.48	406.34		454.17	455.32	457.18		508.42	509.57	511.44	
		ODAmps	24.68	24.65	24.60		27.85	27.82	27.77		31.38	31.36	31.31		35.21	35.19	35.13		39.49	39.46	39.41		44.51	44.48	44.43	
		TotalPower	6,333	6,328	6,316		7,026	7,020	7,008		7,798	7,793	7,781		8,635	8,629	8,617		9,569	9,564	9,552		10,666	10,660	10,648	
75	2975	Capacity	99,283	100,677	103,625	108,128	98,399	99,793	102,741	107,244	95,822	97,216	100,164	104,667	91,389	92,783	95,731	100,234	85,970	87,364	90,312	94,815	81,024	82,418	85,366	89,869
		S/T	0.74	0.67	0.54	0.40	1.00	0.68	0.54	0.40	1.00	0.70	0.57	0.43	1.00	0.72	0.59	0.45	1.00	1.00	0.61	0.47	1.00	1.00	0.66	0.52
		Evap dT	22.12	20.38	17.14	13.78	22.07	20.33	17.09	13.73	22.31	20.58	17.33	13.97	22.05	20.31	17.07	13.71	21.82	20.08	16.84	13.48	22.91	21.17	17.93	14.57
		Pr Suc	129.61	131.20	134.48	139.96	137.44	139.03	142.31	147.79	144.30	145.89	149.17	154.66	150.10	151.69	154.97	160.46	155.80	157.39	160.67	166.15	162.93	164.52	167.80	173.28
		Pr Dis	266.14	267.28	269.15	273.77	307.94	309.09	310.95	315.57	351.73	352.88	354.74	359.36	398.88	400.03	401.90	406.51	449.72	450.87	452.74	457.35	503.98	505.13	506.99	511.61
		ODAmps	24.36	24.34	24.28	24.53	27.53	27.51	27.45	27.69	31.07	31.04	30.99	31.23	34.90	34.87	34.82	35.06	39.17	39.15	39.09	39.34	44.19	44.17	44.11	44.35
		TotalPower	6,264	6,259	6,247	6,300	6,956	6,951	6,939	6,992	7,729	7,724	7,712	7,765	8,566	8,560	8,548	8,601	9,500	9,495	9,483	9,536	10,596	10,591	10,579	10,632
	3200	Capacity	100,040	101,434	104,382	108,885	99,157	100,551	103,499	108,002	96,580	97,974	100,922	105,425	92,146	93,540	96,488	100,991	86,728	88,122	91,070	95,573	81,781	83,175	86,123	90,626
		S/T	0.77	0.70	0.57	0.43	1.00	0.71	0.57	0.43	1.00	0.73	0.60	0.46	1.00	0.75	0.62	0.48	1.00	1.00	0.64	0.50	1.00	1.00	0.69	0.55
		Evap dT	21.55	19.81	16.57	13.21	21.50	19.77	16.52	13.16	21.75	20.01	16.77	13.41	21.49	19.75	16.51	13.15	21.25	19.52	16.27	12.91	22.34	20.60	17.36	14.00
		Pr Suc	130.69	132.28	135.56	141.04	138.52	140.12	143.39	148.88	145.39	146.98	150.26	155.74	151.19	152.78	156.06	161.54	156.88	158.47	161.75	167.23	164.01	165.60	168.88	174.36
		Pr Dis	267.38	268.53	270.40	275.01	309.18	310.33	312.20	316.81	352.98	354.13	355.99	360.61	400.13	401.28	403.14	407.76	450.97	452.12	453.98	458.60	505.23	506.38	508.24	512.86
		ODAmps	24.45	24.43	24.37	24.61	27.62	27.59	27.54	27.78	31.16	31.13	31.08	31.32	34.98	34.96	34.91	35.15	39.26	39.24	39.18	39.42	44.28	44.25	44.20	44.44
		TotalPower	6,283	6,278	6,266	6,319	6,976	6,970	6,958	7,011	7,749	7,743	7,731	7,784	8,585	8,579	8,568	8,621	9,519	9,514	9,502	9,555	10,616	10,610	10,598	10,651
	3825	Capacity	102,608	104,001	106,950	111,453	101,724	103,118	106,066	110,569	99,147	100,541	103,489	107,992	94,714	96,108	99,056	103,559	89,295	90,689	93,637	98,140	84,349	85,742	88,690	93,194
		S/T	1.00	0.74	0.61	0.47	1.00	0.75	0.61	0.48	1.00	0.77	0.64	0.50	1.00	1.00	0.66	0.52	1.00	1.00	0.68	0.54	1.00	1.00	0.73	0.59
		Evap dT	20.22	18.48	15.24	11.88	20.17	18.43	15.19	11.83	20.41	18.68	15.43	12.07	20.15	18.42	15.17	11.81	19.92	18.18	14.94	11.58	21.01	19.27	16.03	12.67
		Pr Suc	134.09	135.68	138.96	144.44	141.92	143.51	146.79	152.28	148.79	150.38	153.65	159.14	154.59	156.18	159.46	164.94	160.28	161.87	165.15	170.63	167.41	169.00	172.28	177.76
		Pr Dis	270.81	271.96	273.83	278.44	312.61	313.76	315.63	320.24	356.41	357.56	359.42	364.04	403.56	404.71	406.57	411.19	454.40	455.55	457.41	462.03	508.66	509.81	511.67	516.29
		ODAmps	24.66	24.63	24.58	24.82	27.83	27.80	27.75	27.99	31.36	31.34	31.29	31.53	35.19	35.17	35.11	35.36	39.47	39.44	39.39	39.63	44.49	44.46	44.41	44.65
		TotalPower	6,329	6,323	6,311	6,364	7,021	7,016	7,004	7,057	7,794	7,788	7,777	7,830	8,630	8,625	8,613	8,666	9,565	9,559	9,547	9,600	10,661	10,656	10,644	10,697

IDB: Entering Indoor Dry Bulb Temperature Shaded area reflects ACCA (TVA) conditions **kW = Total system power**

High and low pressures are measured at the liquid and suction access fittings. **Amps: Unit amps (comp.+ evaporator + condenser fan motors)**

Design Subcooling, 16 - 19 °F @ the liquid access fitting connection ARI 95 test conditions. Design Superheat 8 - 12°F @ the compressor suction access fitting connection.

			Outdoor Ambient Temperature																							
			65				75				85				95				105				115			
			Entering Indoor Wet Bulb Temperature																							
IDB	Airflow	ID WB	59	63	67	71	59	63	67	71	59	63	67	71	59	63	67	71	59	63	67	71	59	63	67	71
80	2975	Capacity	99,794	101,188	104,136	108,639	98,911	100,304	103,252	107,756	96,334	97,727	100,676	105,179	91,900	93,294	96,242	100,745	86,482	87,875	90,823	95,327	81,535	82,929	85,877	90,380
		S/T	1.00	0.79	0.66	0.52	1.00	0.80	0.67	0.53	1.00	1.00	0.69	0.55	1.00	1.00	0.71	0.57	1.00	1.00	0.73	0.59	1.00	1.00	1.00	0.64
		Evap dT	25.96	24.22	20.98	17.62	25.91	24.18	20.93	17.57	26.16	24.42	21.18	17.82	25.90	24.16	20.92	17.56	25.66	23.93	20.68	17.32	26.75	25.01	21.77	18.41
		Pr Suc	130.18	131.77	135.04	140.53	138.01	139.60	142.88	148.36	144.87	146.46	149.74	155.22	150.67	152.26	155.54	161.03	156.37	157.96	161.24	166.72	163.49	165.09	168.36	173.85
		Pr Dis	266.62	267.77	269.64	274.25	308.42	309.57	311.44	316.05	352.22	353.37	355.23	359.85	399.37	400.52	402.38	407.00	450.21	451.36	453.22	457.84	504.47	505.62	507.48	512.10
		ODAmps	24.38	24.35	24.30	24.54	27.55	27.52	27.47	27.71	31.09	31.06	31.01	31.25	34.91	34.89	34.83	35.08	39.19	39.16	39.11	39.35	44.21	44.18	44.13	44.37
		TotalPower	6,268	6,262	6,250	6,303	6,960	6,955	6,943	6,996	7,733	7,727	7,716	7,769	8,569	8,564	8,552	8,605	9,504	9,498	9,486	9,539	10,600	10,595	10,583	10,636
	3200	Capacity	100,552	101,945	104,893	109,397	99,668	101,062	104,010	108,513	97,091	98,485	101,433	105,936	92,658	94,051	**96,999**	101,503	87,239	88,633	91,581	96,084	82,292	83,686	86,634	91,137
		S/T	1.00	0.82	0.69	0.55	1.00	0.83	0.70	0.56	1.00	1.00	0.72	0.58	1.00	1.00	**0.74**	0.60	1.00	1.00	0.76	0.62	1.00	1.00	1.00	0.67
		Evap dT	25.40	23.66	20.42	17.06	25.35	23.61	20.37	17.01	25.59	23.86	20.61	17.25	25.33	23.59	**20.35**	16.99	25.10	23.36	20.12	16.76	26.19	24.45	21.21	17.85
		Pr Suc	131.26	132.85	136.13	141.61	139.09	140.68	143.96	149.45	145.95	147.55	150.82	156.31	151.76	153.35	**156.63**	162.11	157.45	159.04	162.32	167.80	164.58	166.17	169.45	174.93
		Pr Dis	267.87	269.02	270.88	275.50	309.67	310.82	312.68	317.30	353.46	354.61	356.48	361.09	400.62	401.77	**403.63**	408.25	451.46	452.61	454.47	459.09	505.72	506.86	508.73	513.34
		ODAmps	24.47	24.44	24.39	24.63	27.64	27.61	27.56	27.80	31.17	31.15	31.09	31.34	35.00	34.98	**34.92**	35.16	39.28	39.25	39.20	39.44	44.30	44.27	44.22	44.46
		TotalPower	6,287	6,282	6,270	6,323	6,979	6,974	6,962	7,015	7,752	7,747	7,735	7,788	8,589	8,583	**8,571**	8,624	9,523	9,518	9,506	9,559	10,619	10,614	10,602	10,655
	3825	Capacity	103,119	104,513	107,461	111,964	102,235	103,629	106,577	111,080	99,659	101,052	104,000	108,504	95,225	96,619	99,567	104,070	89,806	91,200	94,148	98,651	84,860	86,254	89,202	93,705
		S/T	1.00	0.86	0.73	0.59	1.00	0.87	0.74	0.60	1.00	1.00	0.76	0.62	1.00	1.00	0.78	0.64	1.00	1.00	0.80	0.66	1.00	1.00	1.00	0.71
		Evap dT	24.06	22.33	19.08	15.72	24.02	22.28	19.04	15.68	24.26	22.52	19.28	15.92	24.00	22.26	19.02	15.66	23.77	22.03	18.79	15.43	24.85	23.12	19.87	16.51
		Pr Suc	134.66	136.25	139.53	145.01	142.49	144.08	147.36	152.85	149.35	150.95	154.22	159.71	155.16	156.75	160.02	165.51	160.85	162.44	165.72	171.20	167.98	169.57	172.85	178.33
		Pr Dis	271.30	272.45	274.31	278.93	313.10	314.25	316.11	320.73	356.89	358.04	359.91	364.52	404.05	405.20	407.06	411.68	454.89	456.04	457.90	462.52	509.15	510.30	512.16	516.78
		ODAmps	24.68	24.65	24.60	24.84	27.84	27.82	27.76	28.01	31.38	31.36	31.30	31.54	35.21	35.18	35.13	35.37	39.49	39.46	39.41	39.65	44.50	44.48	44.42	44.67
		TotalPower	6,332	6,327	6,315	6,368	7,025	7,019	7,007	7,060	7,798	7,792	7,780	7,833	8,634	8,628	8,617	8,670	9,568	9,563	9,551	9,604	10,665	10,659	10,647	10,700
85	2975	Capacity	101,457	102,851	105,799	110,302	100,573	101,967	104,915	109,418	97,996	99,390	102,338	106,841	93,563	94,957	97,905	102,408	88,144	89,538	92,486	96,989	83,198	84,592	87,540	92,043
		S/T	1.00	0.89	0.76	0.62	1.00	1.00	0.76	0.63	1.00	1.00	0.79	0.65	1.00	1.00	0.81	0.67	1.00	1.00	1.00	0.69	1.00	1.00	1.00	0.74
		Evap dT	29.37	27.63	24.39	21.03	29.32	27.59	24.34	20.98	29.57	27.83	24.59	21.23	29.31	27.57	24.33	20.97	29.07	27.34	24.09	20.73	30.16	28.42	25.18	21.82
		Pr Suc	132.11	133.70	136.98	142.46	139.94	141.53	144.81	150.29	146.80	148.39	151.67	157.15	152.60	154.19	157.47	162.96	158.30	159.89	163.17	168.65	165.42	167.02	170.29	175.78
		Pr Dis	267.87	269.02	270.88	275.50	309.67	310.82	312.68	317.30	353.46	354.61	356.47	361.09	400.62	401.77	403.63	408.25	451.46	452.61	454.47	459.09	505.71	506.86	508.73	513.34
		ODAmps	24.44	24.41	24.36	24.60	27.61	27.58	27.53	27.77	31.15	31.12	31.07	31.31	34.97	34.95	34.89	35.14	39.25	39.23	39.17	39.41	44.27	44.24	44.19	44.43
		TotalPower	6,281	6,275	6,264	6,317	6,973	6,968	6,956	7,009	7,746	7,741	7,729	7,782	8,582	8,577	8,565	8,618	9,517	9,511	9,500	9,553	10,613	10,608	10,596	10,649
	3200	Capacity	102,214	103,608	106,556	111,059	101,331	102,725	105,673	110,176	98,754	100,148	103,096	107,599	94,320	95,714	98,662	103,165	88,902	90,296	93,244	97,747	83,955	85,349	88,297	92,800
		S/T	1.00	0.92	0.79	0.65	1.00	1.00	0.79	0.65	1.00	1.00	0.82	0.68	1.00	1.00	1.00	0.70	1.00	1.00	1.00	0.72	1.000	1.000	1.000	0.770
		Evap dT	28.81	27.07	23.83	20.47	28.76	27.02	23.78	20.42	29.00	27.27	24.02	20.66	28.74	27.00	23.76	20.40	28.51	26.77	23.53	20.17	29.60	27.86	24.62	21.26
		Pr Suc	133.19	134.78	138.06	143.54	141.02	142.61	145.89	151.38	147.89	149.48	152.76	158.24	153.69	155.28	158.56	164.04	159.38	160.97	164.25	169.73	166.51	168.10	171.38	176.86
		Pr Dis	269.12	270.27	272.13	276.75	310.92	312.07	313.93	318.55	354.71	355.86	357.72	362.34	401.86	403.01	404.88	409.49	452.71	453.85	455.72	460.33	506.96	508.11	509.97	514.59
		ODAmps	24.53	24.50	24.45	24.69	27.70	27.67	27.62	27.86	31.23	31.21	31.15	31.40	35.06	35.04	34.98	35.22	39.34	39.31	39.26	39.50	44.36	44.33	44.28	44.52
		TotalPower	6,300	6,295	6,283	6,336	6,993	6,987	6,975	7,028	7,765	7,760	7,748	7,801	8,602	8,596	8,584	8,637	9,536	9,531	9,519	9,572	10,633	10,627	10,615	10,668
	3825	Capacity	104,782	106,176	109,124	113,627	103,898	105,292	108,240	112,743	101,321	102,715	105,663	110,166	96,888	98,282	101,230	105,733	91,469	92,863	95,811	100,314	86,523	87,916	90,864	95,368
		S/T	1.00	1.00	0.83	0.69	1.00	1.00	0.84	0.70	1.00	1.00	0.86	0.72	1.00	1.00	1.00	0.74	1.00	1.00	1.00	0.76	1.00	1.00	1.00	0.81
		Evap dT	27.47	25.74	22.49	19.13	27.43	25.69	22.45	19.09	27.67	25.93	22.69	19.33	27.41	25.67	22.43	19.07	27.18	25.44	22.20	18.84	28.26	26.53	23.28	19.92
		Pr Suc	136.59	138.18	141.46	146.94	144.42	146.01	149.29	154.78	151.28	152.88	156.15	161.64	157.09	158.68	161.96	167.44	162.78	164.37	167.65	173.13	169.91	171.50	174.78	180.26
		Pr Dis	272.55	273.70	275.56	280.18	314.35	315.50	317.36	321.98	358.14	359.29	361.15	365.77	405.30	406.44	408.31	412.92	456.14	457.28	459.15	463.76	510.39	511.54	513.40	518.02
		ODAmps	24.74	24.71	24.66	24.90	27.90	27.88	27.83	28.07	31.44	31.42	31.36	31.60	35.27	35.24	35.19	35.43	39.55	39.52	39.47	39.71	44.56	44.54	44.48	44.73
		TotalPower	6,346	6,340	6,328	6,381	7,038	7,033	7,021	7,074	7,811	7,805	7,794	7,846	8,647	8,642	8,630	8,683	9,582	9,576	9,564	9,617	10,678	10,672	10,661	10,714

IDB: Entering Indoor Dry Bulb Temperature Shaded area reflects ACCA (TVA) conditions **kW = Total system power**

High and low pressures are measured at the liquid and suction access fittings. **Amps: Unit amps (comp.+ evaporator + condenser fan motors)**

Design Subcooling, 16 - 19 °F @ the liquid access fitting connection ARI 95 test conditions. Design Superheat 8 - 12°F @ the compressor suction access fitting connection.

			Outdoor Ambient Temperature																							
			65				75				85				95				105				115			
			Entering Indoor Wet Bulb Temperature																							
IDB	Airflow	ID WB	59	63	67	71	59	63	67	71	59	63	67	71	59	63	67	71	59	63	67	71	59	63	67	71
70	3150	Capacity	118,689	120,356	123,881		117,632	119,299	122,825		114,551	116,218	119,743		109,249	110,916	114,441		102,769	104,436	107,961		96,853	98,520	102,046	
		S/T	0.62	0.55	0.41		0.63	0.55	0.42		1.00	0.58	0.44		1.00	0.59	0.46		1.00	0.62	0.48		1.00	1.00	0.53	
		Evap dT	20.10	18.19	14.62		20.05	18.14	14.57		20.32	18.41	14.84		20.03	18.12	14.55		19.77	17.86	14.30		20.97	19.06	15.49	
		Pr Suc	134.10	135.75	139.14		142.21	143.86	147.25		149.31	150.96	154.35		155.31	156.96	160.35		161.20	162.85	166.24		168.58	170.22	173.62	
		Pr Dis	273.70	274.89	276.80		316.72	317.91	319.82		361.79	362.98	364.89		410.33	411.51	413.43		462.65	463.83	465.75		518.49	519.67	521.59	
		ODAmps	28.24	28.21	28.14		32.32	32.29	32.22		36.88	36.84	36.77		41.80	41.77	41.70		47.31	47.28	47.21		53.77	53.74	53.67	
		TotalPower	7,292	7,285	7,269		8,183	8,176	8,161		9,178	9,171	9,156		10,255	10,248	10,233		11,459	11,451	11,436		12,870	12,863	12,848	
	3400	Capacity	119,648	121,314	124,840		118,591	120,258	123,784		115,509	117,176	120,702		110,207	111,874	115,400		103,728	105,394	108,920		97,812	99,479	103,004	
		S/T	0.65	0.58	0.44		1.00	0.58	0.45		1.00	0.61	0.47		1.00	0.62	0.49		1.00	1.00	0.51		1.00	1.00	0.56	
		Evap dT	19.45	17.54	13.97		19.40	17.49	13.92		19.67	17.76	14.19		19.38	17.47	13.90		19.12	17.21	13.65		20.32	18.41	14.84	
		Pr Suc	135.29	136.93	140.33		143.39	145.04	148.43		150.49	152.14	155.53		156.49	158.14	161.53		162.39	164.03	167.42		169.76	171.41	174.80	
		Pr Dis	275.05	276.24	278.15		318.07	319.26	321.17		363.14	364.33	366.24		411.67	412.86	414.77		464.00	465.18	467.10		519.84	521.02	522.94	
		ODAmps	28.36	28.33	28.26		32.44	32.41	32.34		36.99	36.96	36.89		41.92	41.89	41.82		47.43	47.40	47.33		53.89	53.86	53.79	
		TotalPower	7,318	7,311	7,295		8,209	8,202	8,187		9,204	9,197	9,182		10,281	10,274	10,259		11,484	11,477	11,462		12,896	12,889	12,874	
	4050	Capacity	122,690	124,357	127,882		121,634	123,300	126,826		118,552	120,219	123,744		113,250	114,917	118,442		106,770	108,437	111,962		100,854	102,521	106,047	
		S/T	0.69	0.62	0.48		1.00	0.62	0.49		1.00	0.65	0.51		1.00	0.66	0.53		1.00	1.00	0.55		1.00	1.00	0.60	
		Evap dT	18.01	16.10	12.54		17.96	16.05	12.49		18.23	16.32	12.75		17.94	16.03	12.47		17.69	15.78	12.21		18.88	16.97	13.41	
		Pr Suc	138.76	140.41	143.80		146.87	148.52	151.91		153.97	155.62	159.01		159.97	161.62	165.01		165.86	167.51	170.90		173.24	174.89	178.28	
		Pr Dis	278.53	279.71	281.63		321.55	322.73	324.65		366.62	367.80	369.72		415.15	416.33	418.25		467.48	468.66	470.58		523.32	524.50	526.42	
		ODAmps	28.62	28.59	28.52		32.70	32.67	32.60		37.26	37.22	37.15		42.19	42.15	42.08		47.69	47.66	47.59		54.15	54.12	54.05	
		TotalPower	7,375	7,368	7,353		8,266	8,259	8,244		9,262	9,255	9,239		10,338	10,331	10,316		11,542	11,535	11,519		12,953	12,946	12,931	
75	3150	Capacity	118,758	120,424	123,950	129,335	117,701	119,368	122,894	128,279	114,619	116,286	119,812	125,197	109,317	110,984	114,510	119,895	102,838	104,504	108,030	113,415	96,922	98,589	102,114	107,500
		S/T	1.00	0.67	0.54	0.40	1.00	0.68	0.54	0.41	1.00	0.70	0.57	0.43	1.00	1.00	0.59	0.45	1.00	1.00	0.61	0.47	1.00	1.00	0.66	0.52
		Evap dT	24.30	22.39	18.82	15.13	24.25	22.34	18.77	15.08	24.52	22.61	19.04	15.34	24.23	22.32	18.75	15.06	23.97	22.06	18.50	14.80	25.17	23.26	19.69	16.00
		Pr Suc	134.13	135.78	139.17	144.85	142.24	143.89	147.28	152.95	149.34	150.99	154.38	160.05	155.34	156.99	160.38	166.05	161.23	162.88	166.27	171.95	168.61	170.26	173.65	179.32
		Pr Dis	273.94	275.13	277.04	281.80	316.97	318.15	320.07	324.82	362.04	363.22	365.14	369.89	410.57	411.75	413.67	418.42	462.89	464.07	465.99	470.74	518.73	519.91	521.83	526.58
		ODAmps	28.21	28.18	28.11	28.42	32.29	32.26	32.19	32.50	36.85	36.82	36.75	37.06	41.78	41.75	41.68	41.99	47.28	47.25	47.18	47.50	53.75	53.71	53.64	53.96
		TotalPower	7,286	7,279	7,264	7,332	8,177	8,170	8,155	8,223	9,172	9,165	9,150	9,218	10,249	10,242	10,227	10,295	11,453	11,446	11,430	11,499	12,864	12,857	12,842	12,910
	3400	Capacity	119,716	121,383	124,909	130,294	118,660	120,327	123,852	129,237	115,578	117,245	120,771	126,156	110,276	111,943	115,469	120,854	103,796	105,463	108,989	114,374	97,881	99,548	103,073	108,458
		S/T	1.00	0.70	0.57	0.43	1.00	0.71	0.58	0.44	1.00	0.73	0.60	0.46	1.00	1.00	0.62	0.48	1.00	1.00	0.64	0.50	1.00	1.00	0.69	0.55
		Evap dT	23.65	21.74	18.17	14.48	23.60	21.69	18.12	14.43	23.87	21.96	18.39	14.70	23.58	21.67	18.10	14.41	23.32	21.41	17.85	14.15	24.52	22.61	19.04	15.35
		Pr Suc	135.32	136.96	140.36	146.03	143.42	145.07	148.46	154.14	150.52	152.17	155.56	161.24	156.53	158.17	161.56	167.24	162.42	164.06	167.46	173.13	169.79	171.44	174.83	180.51
		Pr Dis	275.29	276.48	278.39	283.15	318.31	319.50	321.41	326.17	363.38	364.57	366.48	371.24	411.92	413.10	415.02	419.77	464.24	465.42	467.34	472.09	520.08	521.26	523.18	527.93
		ODAmps	28.33	28.30	28.23	28.54	32.41	32.38	32.31	32.62	36.97	36.94	36.87	37.18	41.90	41.86	41.79	42.11	47.40	47.37	47.30	47.61	53.86	53.83	53.76	54.07
		TotalPower	7,312	7,305	7,290	7,358	8,203	8,196	8,181	8,249	9,198	9,191	9,176	9,244	10,275	10,268	10,253	10,321	11,479	11,472	11,456	11,525	12,890	12,883	12,868	12,936
	4050	Capacity	122,759	124,426	127,951	133,336	121,702	123,369	126,895	132,280	118,621	120,288	123,813	129,198	113,319	114,985	118,511	123,896	106,839	108,506	112,031	117,416	100,923	102,590	106,116	111,501
		S/T	1.00	0.74	0.61	0.47	1.00	0.75	0.62	0.48	1.00	1.00	0.64	0.50	1.00	1.00	0.66	0.52	1.00	1.00	0.68	0.54	1.00	1.00	1.00	0.59
		Evap dT	22.21	20.30	16.74	13.04	22.16	20.25	16.69	12.99	22.43	20.52	16.95	13.26	22.14	20.23	16.67	12.97	21.89	19.98	16.41	12.72	23.08	21.17	17.61	13.91
		Pr Suc	138.80	140.44	143.83	149.51	146.90	148.55	151.94	157.61	154.00	155.65	159.04	164.71	160.00	161.65	165.04	170.72	165.90	167.54	170.93	176.61	173.27	174.92	178.31	183.98
		Pr Dis	278.77	279.95	281.87	286.62	321.79	322.97	324.89	329.64	366.86	368.04	369.96	374.71	415.39	416.58	418.49	423.24	467.72	468.90	470.82	475.57	523.56	524.74	526.66	531.41
		ODAmps	28.60	28.56	28.49	28.81	32.68	32.64	32.57	32.89	37.23	37.20	37.13	37.44	42.16	42.13	42.06	42.37	47.67	47.63	47.56	47.88	54.13	54.09	54.02	54.34
		TotalPower	7,369	7,362	7,347	7,415	8,261	8,254	8,238	8,306	9,256	9,249	9,233	9,302	10,333	10,326	10,310	10,379	11,536	11,529	11,514	11,582	12,948	12,941	12,925	12,994

IDB: Entering Indoor Dry Bulb Temperature Shaded area reflects ACCA (TVA) conditions **kW = Total system power**

High and low pressures are measured at the liquid and suction access fittings. **Amps: Unit amps (comp.+ evaporator + condenser fan motors)**

Design Subcooling, 16 - 19 °F @ the liquid access fitting connection ARI 95 test conditions. Design Superheat 8 - 12°F @ the compressor suction access fitting connection.

			Outdoor Ambient Temperature																							
			65				75				85				95				105				115			
			Entering Indoor Wet Bulb Temperature																							
IDB	Airflow	ID WB	59	63	67	71	59	63	67	71	59	63	67	71	59	63	67	71	59	63	67	71	59	63	67	71
80	3150	Capacity	119,369	121,036	124,561	129,947	118,313	119,979	123,505	128,890	115,231	116,898	120,423	125,808	109,929	111,596	115,121	120,506	103,449	105,116	108,641	114,027	97,533	99,200	102,726	108,111
		S/T	1.00	0.79	0.66	0.52	1.00	0.80	0.67	0.53	1.00	1.00	0.69	0.55	1.00	1.00	0.71	0.57	1.00	1.00	0.73	0.59	1.00	1.00	1.00	0.64
		Evap dT	28.53	26.62	23.05	19.36	28.48	26.57	23.00	19.30	28.74	26.83	23.27	19.57	28.46	26.55	22.98	19.28	28.20	26.29	22.72	19.03	29.40	27.49	23.92	20.23
		Pr Suc	134.72	136.37	139.76	145.44	142.83	144.48	147.87	153.54	149.93	151.58	154.97	160.64	155.93	157.58	160.97	166.64	161.82	163.47	166.86	172.53	169.20	170.84	174.24	179.91
		Pr Dis	274.45	275.63	277.55	282.30	317.47	318.65	320.57	325.32	362.54	363.72	365.64	370.39	411.07	412.25	414.17	418.92	463.39	464.58	466.49	471.24	519.23	520.41	522.33	527.08
		ODAmps	28.24	28.20	28.13	28.45	32.32	32.28	32.21	32.53	36.87	36.84	36.77	37.08	41.80	41.77	41.70	42.01	47.31	47.27	47.20	47.52	53.77	53.73	53.67	53.98
		TotalPower	7,290	7,283	7,268	7,336	8,182	8,175	8,160	8,228	9,177	9,170	9,155	9,223	10,254	10,247	10,232	10,300	11,457	11,450	11,435	11,503	12,869	12,862	12,847	12,915
	3400	Capacity	120,328	121,995	125,520	130,905	119,271	120,938	124,464	129,849	116,190	117,856	121,382	126,767	110,888	112,554	**116,080**	121,465	104,408	106,075	109,600	114,985	98,492	100,159	103,685	109,070
		S/T	1.00	0.82	0.69	0.55	1.00	1.00	0.70	0.56	1.00	1.00	0.72	0.58	1.00	1.00	**0.74**	0.60	1.00	1.00	1.00	0.62	1.00	1.00	1.00	0.67
		Evap dT	27.88	25.97	22.40	18.71	27.83	25.92	22.35	18.66	28.10	26.19	22.62	18.92	27.81	25.90	**22.33**	18.64	27.55	25.64	22.08	18.38	28.75	26.84	23.27	19.58
		Pr Suc	135.91	137.55	140.95	146.62	144.01	145.66	149.05	154.73	151.11	152.76	156.15	161.83	157.11	158.76	**162.15**	167.83	163.01	164.65	168.04	173.72	170.38	172.03	175.42	181.09
		Pr Dis	275.80	276.98	278.90	283.65	318.82	320.00	321.92	326.67	363.89	365.07	366.99	371.74	412.42	413.60	**415.52**	420.27	464.74	465.92	467.84	472.59	520.58	521.76	523.68	528.43
		ODAmps	28.35	28.32	28.25	28.56	32.43	32.40	32.33	32.64	36.99	36.96	36.89	37.20	41.92	41.89	**41.82**	42.13	47.43	47.39	47.32	47.64	53.89	53.85	53.78	54.10
		TotalPower	7,316	7,309	7,294	7,362	8,208	8,201	8,186	8,254	9,203	9,196	9,181	9,249	10,280	10,273	**10,258**	10,326	11,483	11,476	11,461	11,529	12,895	12,888	12,873	12,941
	4050	Capacity	123,370	125,037	128,563	133,948	122,314	123,981	127,506	132,891	119,232	120,899	124,424	129,810	113,930	115,597	119,122	124,507	107,450	109,117	112,642	118,028	101,535	103,201	106,727	112,112
		S/T	1.00	0.86	0.73	0.59	1.00	1.00	0.74	0.60	1.00	1.00	0.76	0.62	1.00	1.00	0.78	0.64	1.00	1.00	1.00	0.66	1.00	1.00	1.00	0.71
		Evap dT	26.44	24.53	20.97	17.27	26.39	24.48	20.91	17.22	26.66	24.75	21.18	17.49	26.37	24.46	20.89	17.20	26.12	24.21	20.64	16.94	27.31	25.40	21.83	18.14
		Pr Suc	139.39	141.03	144.42	150.10	147.49	149.14	152.53	158.20	154.59	156.24	159.63	165.30	160.59	162.24	165.63	171.31	166.48	168.13	171.52	177.20	173.86	175.51	178.90	184.57
		Pr Dis	279.27	280.46	282.37	287.13	322.29	323.48	325.39	330.15	367.36	368.55	370.46	375.22	415.90	417.08	418.99	423.75	468.22	469.40	471.32	476.07	524.06	525.24	527.16	531.91
		ODAmps	28.62	28.58	28.51	28.83	32.70	32.66	32.59	32.91	37.25	37.22	37.15	37.46	42.18	42.15	42.08	42.39	47.69	47.66	47.59	47.90	54.15	54.12	54.05	54.36
		TotalPower	7,374	7,367	7,351	7,420	8,265	8,258	8,243	8,311	9,260	9,253	9,238	9,306	10,337	10,330	10,315	10,383	11,541	11,534	11,518	11,587	12,952	12,945	12,930	12,998
85	3150	Capacity	121,358	123,024	126,550	131,935	120,301	121,968	125,493	130,879	117,219	118,886	122,412	127,797	111,917	113,584	117,110	122,495	105,437	107,104	110,630	116,015	99,522	101,189	104,714	110,099
		S/T	1.00	1.00	0.76	0.62	1.00	1.00	0.77	0.63	1.00	1.00	0.79	0.65	1.00	1.00	1.00	0.67	1.00	1.00	1.00	0.69	1.00	1.00	1.00	1.00
		Evap dT	32.28	30.37	26.80	23.11	32.23	30.32	26.75	23.05	32.49	30.58	27.02	23.32	32.21	30.30	26.73	23.03	31.95	30.04	26.47	22.78	33.15	31.24	27.67	23.98
		Pr Suc	136.72	138.37	141.76	147.43	144.83	146.47	149.87	155.54	151.93	153.57	156.97	162.64	157.93	159.57	162.97	168.64	163.82	165.47	168.86	174.53	171.20	172.84	176.23	181.91
		Pr Dis	275.73	276.91	278.83	283.58	318.75	319.93	321.85	326.60	363.82	365.00	366.92	371.67	412.35	413.53	415.45	420.20	464.67	465.86	467.77	472.53	520.51	521.70	523.61	528.37
		ODAmps	28.31	28.28	28.21	28.52	32.39	32.36	32.29	32.60	36.95	36.92	36.85	37.16	41.88	41.85	41.78	42.09	47.38	47.35	47.28	47.59	53.85	53.81	53.74	54.06
		TotalPower	7,308	7,301	7,285	7,353	8,199	8,192	8,177	8,245	9,194	9,187	9,172	9,240	10,271	10,264	10,249	10,317	11,474	11,467	11,452	11,520	12,886	12,879	12,864	12,932
	3400	Capacity	122,316	123,983	127,509	132,894	121,260	122,927	126,452	131,837	118,178	119,845	123,371	128,756	112,876	114,543	118,068	123,454	106,396	108,063	111,589	116,974	100,481	102,148	105,673	111,058
		S/T	1.00	1.00	0.79	0.65	1.00	1.00	0.80	0.66	1.00	1.00	0.82	0.68	1.00	1.00	1.00	0.70	1.00	1.00	1.00	0.72	1.000	1.000	1.000	1.000
		Evap dT	31.63	29.72	26.15	22.46	31.58	29.67	26.10	22.41	31.85	29.94	26.37	22.67	31.56	29.65	26.08	22.39	31.30	29.39	25.83	22.13	32.50	30.59	27.02	23.33
		Pr Suc	137.90	139.55	142.94	148.62	146.01	147.66	151.05	156.72	153.11	154.76	158.15	163.82	159.11	160.76	164.15	169.82	165.00	166.65	170.04	175.72	172.38	174.03	177.42	183.09
		Pr Dis	277.08	278.26	280.18	284.93	320.10	321.28	323.20	327.95	365.17	366.35	368.27	373.02	413.70	414.88	416.80	421.55	466.02	467.21	469.12	473.88	521.86	523.05	524.96	529.72
		ODAmps	28.43	28.40	28.33	28.64	32.51	32.48	32.41	32.72	37.07	37.04	36.97	37.28	42.00	41.96	41.89	42.21	47.50	47.47	47.40	47.71	53.96	53.93	53.86	54.17
		TotalPower	7,334	7,326	7,311	7,379	8,225	8,218	8,203	8,271	9,220	9,213	9,198	9,266	10,297	10,290	10,275	10,343	11,500	11,493	11,478	11,546	12,912	12,905	12,890	12,958
	4050	Capacity	125,359	127,026	130,551	135,936	124,302	125,969	129,495	134,880	121,221	122,887	126,413	131,798	115,918	117,585	121,111	126,496	109,439	111,106	114,631	120,016	103,523	105,190	108,715	114,101
		S/T	1.00	1.00	0.83	0.69	1.00	1.00	0.84	0.70	1.00	1.00	1.00	0.72	1.00	1.00	1.00	0.74	1.00	1.00	1.00	0.76	1.00	1.00	1.00	1.00
		Evap dT	30.19	28.28	24.72	21.02	30.14	28.23	24.66	20.97	30.41	28.50	24.93	21.24	30.12	28.21	24.64	20.95	29.87	27.96	24.39	20.69	31.06	29.15	25.58	21.89
		Pr Suc	141.38	143.03	146.42	152.09	149.49	151.13	154.53	160.20	156.59	158.23	161.63	167.30	162.59	164.24	167.63	173.30	168.48	170.13	173.52	179.19	175.86	177.50	180.90	186.57
		Pr Dis	280.56	281.74	283.66	288.41	323.58	324.76	326.68	331.43	368.65	369.83	371.75	376.50	417.18	418.36	420.28	425.03	469.50	470.68	472.60	477.35	525.34	526.52	528.44	533.19
		ODAmps	28.69	28.66	28.59	28.90	32.77	32.74	32.67	32.99	37.33	37.30	37.23	37.54	42.26	42.23	42.16	42.47	47.77	47.73	47.66	47.98	54.23	54.19	54.12	54.44
		TotalPower	7,391	7,384	7,369	7,437	8,282	8,275	8,260	8,328	9,277	9,270	9,255	9,323	10,354	10,347	10,332	10,400	11,558	11,551	11,535	11,604	12,969	12,962	12,947	13,015

IDB: Entering Indoor Dry Bulb Temperature Shaded area reflects ACCA (TVA) conditions **kW = Total system power**

High and low pressures are measured at the liquid and suction access fittings. **Amps: Unit amps (comp.+ evaporator + condenser fan motors)**

Design Subcooling, 16 - 19 °F @ the liquid access fitting connection ARI 95 test conditions. Design Superheat 8 - 12°F @ the compressor suction access fitting connection.

			Outdoor Ambient Temperature																							
			65				75				85				95				105				115			
			Entering Indoor Wet Bulb Temperature																							
IDB	Airflow	ID WB	59	63	67	71	59	63	67	71	59	63	67	71	59	63	67	71	59	63	67	71	59	63	67	71
70	3850	Capacity	143,021	145,033	149,288		141,746	143,758	148,013		138,027	140,038	144,293		131,628	133,639	137,894		123,807	125,819	130,074		116,668	118,680	122,934	
		S/T	0.59	0.52	0.39		1.00	0.53	0.40		1.00	0.55	0.42		1.00	0.57	0.44		1.00	1.00	0.46		1.00	1.00	0.51	
		Evap dT	19.72	17.86	14.38		19.67	17.81	14.33		19.93	18.07	14.59		19.65	17.79	14.31		19.40	17.54	14.06		20.56	18.70	15.23	
		Pr Suc	136.09	137.76	141.21		144.33	146.00	149.45		151.55	153.22	156.67		157.65	159.32	162.77		163.64	165.31	168.76		171.14	172.81	176.26	
		Pr Dis	269.31	270.48	272.36		311.69	312.85	314.74		356.08	357.24	359.13		403.88	405.04	406.93		455.42	456.58	458.47		510.42	511.58	513.47	
		ODAmps	32.65	32.62	32.54		37.28	37.24	37.16		42.44	42.40	42.32		48.03	47.99	47.91		54.27	54.23	54.15		61.59	61.55	61.47	
		TotalPower	9,006	8,998	8,981		10,016	10,008	9,991		11,144	11,136	11,119		12,365	12,357	12,339		13,728	13,720	13,703		15,328	15,320	15,303	
	4200	Capacity	144,305	146,317	150,572		143,030	145,042	149,297		139,311	141,322	145,577		132,912	134,923	139,178		125,091	127,103	131,358		117,952	119,963	124,218	
		S/T	0.63	0.56	0.43		1.00	0.56	0.43		1.00	0.59	0.46		1.00	0.60	0.48		1.00	1.00	0.50		1.00	1.00	0.55	
		Evap dT	18.99	17.13	13.66		18.94	17.08	13.61		19.20	17.34	13.87		18.92	17.06	13.59		18.67	16.81	13.34		19.84	17.98	14.50	
		Pr Suc	137.43	139.11	142.56		145.67	147.35	150.80		152.89	154.56	158.01		158.99	160.67	164.12		164.98	166.66	170.10		172.48	174.15	177.60	
		Pr Dis	270.81	271.98	273.87		313.19	314.35	316.24		357.58	358.75	360.63		405.38	406.55	408.44		456.92	458.09	459.97		511.92	513.09	514.97	
		ODAmps	32.81	32.77	32.69		37.43	37.40	37.32		42.59	42.56	42.48		48.18	48.14	48.06		54.42	54.38	54.31		61.74	61.71	61.63	
		TotalPower	9,040	9,032	9,014		10,050	10,042	10,025		11,178	11,170	11,153		12,398	12,390	12,373		13,762	13,754	13,737		15,362	15,354	15,337	
	4950	Capacity	147,650	149,661	153,916		146,375	148,386	152,641		142,655	144,667	148,922		136,256	138,268	142,523		128,436	130,447	134,702		121,296	123,308	127,563	
		S/T	0.67	0.60	0.47		1.00	0.60	0.47		1.00	0.63	0.50		1.00	1.00	0.52		1.00	1.00	0.54		1.00	1.00	0.59	
		Evap dT	17.68	15.82	12.34		17.63	15.77	12.29		17.89	16.03	12.55		17.61	15.75	12.27		17.36	15.50	12.02		18.52	16.66	13.19	
		Pr Suc	140.67	142.35	145.80		148.91	150.59	154.04		156.13	157.80	161.25		162.23	163.91	167.36		168.22	169.90	173.34		175.72	177.39	180.84	
		Pr Dis	273.99	275.15	277.04		316.36	317.53	319.42		360.76	361.92	363.81		408.56	409.72	411.61		460.10	461.26	463.15		515.10	516.26	518.15	
		ODAmps	33.09	33.05	32.97		37.71	37.68	37.60		42.87	42.84	42.76		48.46	48.42	48.34		54.70	54.66	54.59		62.02	61.99	61.91	
		TotalPower	9,101	9,093	9,075		10,111	10,103	10,086		11,239	11,231	11,214		12,459	12,451	12,434		13,823	13,815	13,798		15,423	15,415	15,398	
75	3850	Capacity	143,104	145,116	149,371	155,870	141,829	143,841	148,096	154,595	138,110	140,122	144,376	150,876	131,711	133,722	137,977	144,477	123,890	125,902	130,157	136,656	116,751	118,763	123,017	129,517
		S/T	1.00	0.64	0.52	0.38	1.00	0.65	0.52	0.39	1.00	0.67	0.55	0.41	1.00	1.00	0.56	0.43	1.00	1.00	0.58	0.45	1.00	1.00	1.00	0.50
		Evap dT	23.81	21.95	18.47	14.87	23.76	21.90	18.42	14.82	24.02	22.16	18.68	15.08	23.74	21.88	18.40	14.80	23.49	21.63	18.15	14.56	24.65	22.79	19.32	15.72
		Pr Suc	136.12	137.79	141.24	147.01	144.36	146.03	149.48	155.25	151.58	153.25	156.70	162.47	157.68	159.35	162.80	168.57	163.67	165.34	168.79	174.56	171.17	172.84	176.29	182.06
		Pr Dis	269.55	270.71	272.60	277.28	311.92	313.09	314.98	319.66	356.32	357.48	359.37	364.05	404.12	405.28	407.17	411.85	455.65	456.82	458.71	463.39	510.66	511.82	513.71	518.39
		ODAmps	32.62	32.59	32.51	32.86	37.25	37.21	37.13	37.49	42.41	42.37	42.29	42.65	48.00	47.96	47.88	48.23	54.24	54.20	54.12	54.48	61.56	61.52	61.44	61.80
		TotalPower	8,999	8,991	8,974	9,051	10,010	10,002	9,984	10,062	11,138	11,130	11,112	11,190	12,358	12,350	12,333	12,410	13,722	13,714	13,697	13,774	15,322	15,314	15,296	15,374
	4200	Capacity	144,388	146,400	150,655	157,154	143,113	145,125	149,380	155,879	139,394	141,405	145,660	152,160	132,995	135,006	139,261	145,761	125,174	127,186	131,441	137,940	118,035	120,046	124,301	130,801
		S/T	1.00	0.68	0.55	0.42	1.00	0.68	0.56	0.42	1.00	1.00	0.58	0.45	1.00	1.00	0.60	0.46	1.00	1.00	0.62	0.48	1.00	1.00	1.00	0.53
		Evap dT	23.08	21.22	17.75	14.15	23.03	21.17	17.70	14.10	23.29	21.43	17.96	14.36	23.01	21.15	17.68	14.08	22.76	20.90	17.43	13.83	23.93	22.07	18.60	15.00
		Pr Suc	137.47	139.14	142.59	148.36	145.71	147.38	150.83	156.60	152.92	154.60	158.05	163.81	159.03	160.70	164.15	169.92	165.01	166.69	170.14	175.90	172.51	174.19	177.63	183.40
		Pr Dis	271.05	272.22	274.11	278.79	313.43	314.59	316.48	321.16	357.82	358.98	360.87	365.55	405.62	406.79	408.67	413.35	457.16	458.32	460.21	464.89	512.16	513.32	515.21	519.89
		ODAmps	32.78	32.74	32.66	33.02	37.40	37.37	37.29	37.64	42.56	42.53	42.45	42.80	48.15	48.11	48.03	48.39	54.39	54.35	54.28	54.63	61.71	61.68	61.60	61.95
		TotalPower	9,033	9,025	9,008	9,085	10,043	10,035	10,018	10,095	11,171	11,163	11,146	11,223	12,392	12,384	12,367	12,444	13,755	13,748	13,730	13,808	15,355	15,347	15,330	15,407
	4950	Capacity	147,733	149,744	153,999	160,499	146,458	148,469	152,724	159,224	142,738	144,750	149,005	155,504	136,339	138,351	142,606	149,105	128,519	130,531	134,785	141,285	121,379	123,391	127,646	134,145
		S/T	1.00	0.72	0.59	0.45	1.00	0.72	0.60	0.46	1.00	1.00	0.62	0.48	1.00	1.00	0.64	0.50	1.00	1.00	0.66	0.52	1.00	1.00	1.00	0.57
		Evap dT	21.77	19.91	16.43	12.83	21.72	19.86	16.38	12.78	21.98	20.12	16.64	13.05	21.70	19.84	16.36	12.76	21.45	19.59	16.11	12.52	22.61	20.75	17.28	13.68
		Pr Suc	140.71	142.38	145.83	151.60	148.95	150.62	154.07	159.84	156.16	157.84	161.29	167.05	162.27	163.94	167.39	173.16	168.25	169.93	173.38	179.14	175.75	177.43	180.87	186.64
		Pr Dis	274.23	275.39	277.28	281.96	316.60	317.77	319.65	324.33	360.99	362.16	364.05	368.73	408.79	409.96	411.85	416.53	460.33	461.50	463.39	468.07	515.33	516.50	518.39	523.07
		ODAmps	33.06	33.02	32.94	33.30	37.68	37.65	37.57	37.92	42.84	42.81	42.73	43.08	48.43	48.39	48.31	48.67	54.67	54.63	54.56	54.91	61.99	61.96	61.88	62.23
		TotalPower	9,094	9,086	9,069	9,146	10,104	10,096	10,079	10,156	11,232	11,224	11,207	11,284	12,453	12,445	12,428	12,505	13,817	13,809	13,791	13,869	15,416	15,409	15,391	15,469

IDB: Entering Indoor Dry Bulb Temperature Shaded area reflects ACCA (TVA) conditions **kW = Total system power**

High and low pressures are measured at the liquid and suction access fittings. **Amps: Unit amps (comp.+ evaporator + condenser fan motors)**

Design Subcooling, 16 - 19 °F @ the liquid access fitting connection ARI 95 test conditions. Design Superheat 8 - 12°F @ the compressor suction access fitting connection.

			Outdoor Ambient Temperature																							
			65				75				85				95				105				115			
			Entering Indoor Wet Bulb Temperature																							
IDB	Airflow	ID WB	59	63	67	71	59	63	67	71	59	63	67	71	59	63	67	71	59	63	67	71	59	63	67	71
80	3850	Capacity	143,842	145,854	150,109	156,608	142,567	144,579	148,834	155,333	138,848	140,859	145,114	151,614	132,449	134,460	138,715	145,215	124,628	126,640	130,895	137,394	117,489	119,500	123,755	130,255
		S/T	1.00	0.76	0.63	0.50	1.00	1.00	0.64	0.51	1.00	1.00	0.66	0.53	1.00	1.00	0.68	0.55	1.00	1.00	1.00	0.57	1.00	1.00	1.00	0.62
		Evap dT	27.93	26.06	22.59	18.99	27.87	26.01	22.54	18.94	28.14	26.28	22.80	19.20	27.86	25.99	22.52	18.92	27.61	25.75	22.27	18.67	28.77	26.91	23.44	19.84
		Pr Suc	136.72	138.39	141.84	147.61	144.96	146.63	150.08	155.85	152.18	153.85	157.30	163.07	158.28	159.95	163.40	169.17	164.27	165.94	169.39	175.16	171.77	173.44	176.89	182.66
		Pr Dis	270.04	271.21	273.10	277.78	312.42	313.58	315.47	320.15	356.81	357.97	359.86	364.54	404.61	405.78	407.66	412.35	456.15	457.31	459.20	463.88	511.15	512.31	514.20	518.88
		ODAmps	32.65	32.61	32.53	32.89	37.27	37.24	37.16	37.51	42.43	42.40	42.32	42.67	48.02	47.98	47.90	48.26	54.26	54.22	54.15	54.50	61.58	61.55	61.47	61.82
		TotalPower	9,005	8,997	8,979	9,057	10,015	10,007	9,990	10,067	11,143	11,135	11,118	11,195	12,363	12,355	12,338	12,415	13,727	13,719	13,702	13,779	15,327	15,319	15,302	15,379
	4200	Capacity	145,126	147,138	151,393	157,892	143,851	145,863	150,118	156,617	140,132	142,143	146,398	152,898	133,733	135,744	**139,999**	146,499	125,912	127,924	132,179	138,678	118,773	120,784	125,039	131,539
		S/T	1.00	0.80	0.67	0.53	1.00	1.00	0.68	0.54	1.00	1.00	0.70	0.56	1.00	1.00	**0.72**	0.58	1.00	1.00	1.00	0.60	1.00	1.00	1.00	0.65
		Evap dT	27.20	25.34	21.87	18.27	27.15	25.29	21.82	18.22	27.41	25.55	22.08	18.48	27.13	25.27	**21.80**	18.20	26.88	25.02	21.55	17.95	28.05	26.19	22.71	19.11
		Pr Suc	138.06	139.74	143.19	148.95	146.30	147.98	151.43	157.20	153.52	155.20	158.64	164.41	159.62	161.30	**164.75**	170.51	165.61	167.29	170.73	176.50	173.11	174.78	178.23	184.00
		Pr Dis	271.55	272.71	274.60	279.28	313.92	315.09	316.97	321.65	358.31	359.48	361.37	366.05	406.11	407.28	**409.17**	413.85	457.65	458.82	460.71	465.39	512.65	513.82	515.71	520.39
		ODAmps	32.80	32.77	32.69	33.04	37.43	37.39	37.31	37.66	42.59	42.55	42.47	42.83	48.17	48.14	**48.06**	48.41	54.42	54.38	54.30	54.65	61.74	61.70	61.62	61.98
		TotalPower	9,038	9,030	9,013	9,090	10,049	10,041	10,023	10,101	11,177	11,169	11,151	11,229	12,397	12,389	**12,372**	12,449	13,761	13,753	13,736	13,813	15,361	15,353	15,335	15,413
	4950	Capacity	148,470	150,482	154,737	161,236	147,195	149,207	153,462	159,961	143,476	145,488	149,743	156,242	137,077	139,089	143,344	149,843	129,257	131,268	135,523	142,023	122,117	124,129	128,384	134,883
		S/T	1.00	0.84	0.71	0.57	1.00	1.00	0.71	0.58	1.00	1.00	0.74	0.60	1.00	1.00	1.00	0.62	1.00	1.00	1.00	0.64	1.00	1.00	1.00	0.69
		Evap dT	25.89	24.03	20.55	16.95	25.83	23.97	20.50	16.90	26.10	24.24	20.76	17.16	25.82	23.96	20.48	16.88	25.57	23.71	20.23	16.63	26.73	24.87	21.40	17.80
		Pr Suc	141.30	142.98	146.43	152.19	149.54	151.22	154.67	160.43	156.76	158.44	161.88	167.65	162.86	164.54	167.99	173.75	168.85	170.53	173.97	179.74	176.35	178.02	181.47	187.24
		Pr Dis	274.72	275.89	277.77	282.45	317.09	318.26	320.15	324.83	361.49	362.65	364.54	369.22	409.29	410.45	412.34	417.02	460.83	461.99	463.88	468.56	515.83	516.99	518.88	523.56
		ODAmps	33.08	33.05	32.97	33.32	37.71	37.67	37.59	37.94	42.87	42.83	42.75	43.11	48.45	48.42	48.34	48.69	54.69	54.66	54.58	54.93	62.02	61.98	61.90	62.26
		TotalPower	9,099	9,091	9,074	9,151	10,110	10,102	10,085	10,162	11,238	11,230	11,212	11,290	12,458	12,450	12,433	12,510	13,822	13,814	13,797	13,874	15,422	15,414	15,397	15,474
85	3850	Capacity	146,242	148,254	152,509	159,008	144,967	146,979	151,234	157,733	141,248	143,259	147,514	154,014	134,849	136,860	141,115	147,615	127,028	129,040	133,295	139,794	119,889	121,900	126,155	132,655
		S/T	1.00	1.00	0.73	0.60	1.00	1.00	0.74	0.60	1.00	1.00	1.00	0.62	1.00	1.00	1.00	0.64	1.00	1.00	1.00	0.66	1.00	1.00	1.00	1.00
		Evap dT	31.58	29.72	26.24	22.64	31.53	29.67	26.19	22.59	31.79	29.93	26.45	22.86	31.51	29.65	26.17	22.57	31.26	29.40	25.93	22.33	32.42	30.56	27.09	23.49
		Pr Suc	138.75	140.42	143.87	149.64	146.99	148.66	152.11	157.88	154.21	155.88	159.33	165.10	160.31	161.98	165.43	171.20	166.30	167.97	171.42	177.19	173.80	175.47	178.92	184.69
		Pr Dis	271.31	272.47	274.36	279.04	313.68	314.84	316.73	321.41	358.07	359.24	361.13	365.81	405.87	407.04	408.93	413.61	457.41	458.58	460.47	465.15	512.41	513.58	515.47	520.15
		ODAmps	32.74	32.70	32.62	32.97	37.36	37.32	37.25	37.60	42.52	42.49	42.41	42.76	48.11	48.07	47.99	48.35	54.35	54.31	54.23	54.59	61.67	61.64	61.56	61.91
		TotalPower	9,024	9,016	8,999	9,076	10,034	10,026	10,009	10,086	11,162	11,154	11,137	11,214	12,383	12,375	12,357	12,435	13,746	13,738	13,721	13,798	15,346	15,338	15,321	15,398
	4200	Capacity	147,526	149,538	153,792	160,292	146,251	148,263	152,518	159,017	142,532	144,543	148,798	155,298	136,132	138,144	142,399	148,898	128,312	130,324	134,579	141,078	121,173	123,184	127,439	133,939
		S/T	1.00	1.00	0.76	0.63	1.00	1.00	0.77	0.64	1.00	1.00	1.00	0.66	1.00	1.00	1.00	0.68	1.00	1.00	1.00	0.70	1.000	1.000	1.000	1.000
		Evap dT	30.85	28.99	25.52	21.92	30.80	28.94	25.47	21.87	31.06	29.20	25.73	22.13	30.78	28.92	25.45	21.85	30.54	28.68	25.20	21.60	31.70	29.84	26.37	22.77
		Pr Suc	140.09	141.77	145.22	150.98	148.34	150.01	153.46	159.23	155.55	157.23	160.67	166.44	161.65	163.33	166.78	172.54	167.64	169.32	172.77	178.53	175.14	176.82	180.26	186.03
		Pr Dis	272.81	273.97	275.86	280.54	315.18	316.35	318.24	322.92	359.58	360.74	362.63	367.31	407.38	408.54	410.43	415.11	458.92	460.08	461.97	466.65	513.92	515.08	516.97	521.65
		ODAmps	32.89	32.85	32.78	33.13	37.51	37.48	37.40	37.75	42.68	42.64	42.56	42.92	48.26	48.23	48.15	48.50	54.50	54.47	54.39	54.74	61.83	61.79	61.71	62.06
		TotalPower	9,058	9,050	9,032	9,110	10,068	10,060	10,043	10,120	11,196	11,188	11,171	11,248	12,416	12,408	12,391	12,468	13,780	13,772	13,755	13,832	15,380	15,372	15,355	15,432
	4950	Capacity	150,870	152,882	157,137	163,636	149,595	151,607	155,862	162,361	145,876	147,888	152,143	158,642	139,477	141,489	145,744	152,243	131,657	133,668	137,923	144,423	124,517	126,529	130,784	137,283
		S/T	1.00	1.00	0.80	0.67	1.00	1.00	0.81	0.67	1.00	1.00	1.00	0.70	1.00	1.00	1.00	0.72	1.00	1.00	1.00	1.00	1.00	1.00	1.00	1.00
		Evap dT	29.54	27.68	24.20	20.61	29.49	27.63	24.15	20.55	29.75	27.89	24.41	20.82	29.47	27.61	24.13	20.54	29.22	27.36	23.89	20.29	30.38	28.52	25.05	21.45
		Pr Suc	143.33	145.01	148.46	154.22	151.58	153.25	156.70	162.47	158.79	160.47	163.91	169.68	164.89	166.57	170.02	175.78	170.88	172.56	176.01	181.77	178.38	180.06	183.50	189.27
		Pr Dis	275.98	277.15	279.04	283.72	318.36	319.52	321.41	326.09	362.75	363.92	365.80	370.48	410.55	411.72	413.61	418.29	462.09	463.25	465.14	469.82	517.09	518.26	520.14	524.82
		ODAmps	33.17	33.13	33.05	33.41	37.79	37.76	37.68	38.03	42.96	42.92	42.84	43.19	48.54	48.51	48.43	48.78	54.78	54.75	54.67	55.02	62.11	62.07	61.99	62.34
		TotalPower	9,119	9,111	9,093	9,171	10,129	10,121	10,104	10,181	11,257	11,249	11,232	11,309	12,477	12,470	12,452	12,530	13,841	13,833	13,816	13,893	15,441	15,433	15,416	15,493

IDB: Entering Indoor Dry Bulb Temperature Shaded area reflects ACCA (TVA) conditions **kW = Total system power**

High and low pressures are measured at the liquid and suction access fittings. **Amps: Unit amps (comp.+ evaporator + condenser fan motors)**

Design Subcooling, 16 - 19 °F @ the liquid access fitting connection ARI 95 test conditions. Design Superheat 8 - 12°F @ the compressor suction access fitting connection.

Electrical Heater Data

MINIMUM AIR FLOW FOR ELECTRIC HEAT										
Model #	Min Airflow	EHXD-3M15	EHXD-3M30	EHXD-3M45	EHXD-4M15	EHXD-4M30	EHXD-4M45	EHXD-7M15	EHXD-7M30	EHXD-7M45
DSC0903	2400	X	X	X						
DSC0904					X	X	X			
DSC0907								X	X	X
DSC1023	2750	X	X	X						
DSC1024					X	X	X			
DSC1027								X	X	X
DSC1023	3200	X	X	X						
DSC1204					X	X	X			
DSC1207								X	X	X
DSC1503	3750	X	X	X						
DSC1504					X	X	X			
DSC1507								X	X	X

7.5 Ton Cooler • Standard Static Direct Drive • Models: DSC0903D, DSC0904D, DSC0907D

Down Flow				
Speed Tap	ESP	CFM	RPM	BHP
T1**	0.2	1927	436	0.20
	0.4	1750	518	0.24
	0.6	1579	598	0.28
	0.8	-	-	-
T2**	0.2	2170	465	0.28
	0.4	2002	541	0.33
	0.6	1841	616	0.38
	0.8	1572	706	0.43
T3	0.2	3114	580	0.71
	0.4	2981	636	0.78
	0.6	2857	693	0.85
	0.8	2705	752	0.92
T4	0.2	3244	596	0.79
	0.4	3116	650	0.86
	0.6	2995	704	0.93
	0.8	2857	760	1.00
T5	0.2	3370	612	0.87
	0.4	3246	663	0.94
	0.6	3129	715	1.01
	0.8	3002	768	1.09
T6	0.2	2842	547	0.57
	0.4	2700	608	0.63
	0.6	2566	670	0.69
	0.8	2383	737	0.76
T7	0.2	3048	572	0.59
	0.4	2913	629	0.65
	0.6	2786	687	0.71
	0.8	2627	748	0.78
T8	0.2	3180	588	0.75
	0.4	3049	643	0.82
	0.6	2927	699	0.89
	0.8	2782	756	0.96
T9	0.2	3244	596	0.79
	0.4	3116	650	0.86
	0.6	2995	704	0.93
	0.8	2857	760	1.00
T10	0.2	3370	612	0.87
	0.4	3246	663	0.94
	0.6	3129	715	1.01
	0.8	3002	768	1.09

Horizontal Flow				
Speed Tap	ESP	CFM	RPM	BHP
T1**	0.2	1952	453	0.21
	0.4	1844	526	0.25
	0.6	1671	607	0.28
	0.8	-	-	-
T2**	0.2	2182	486	0.30
	0.4	2074	554	0.34
	0.6	1915	629	0.38
	0.8	1621	716	0.44
T3	0.2	3084	617	0.76
	0.4	2977	667	0.82
	0.6	2869	719	0.88
	0.8	2737	773	0.95
T4	0.2	3209	635	0.84
	0.4	3103	683	0.90
	0.6	3001	732	0.97
	0.8	2886	783	1.04
T5	0.2	3330	652	0.92
	0.4	3225	698	0.99
	0.6	3128	745	1.06
	0.8	3029	793	1.12
T6	0.2	2823	579	0.60
	0.4	2715	634	0.66
	0.6	2594	692	0.72
	0.8	2420	755	0.78
T7	0.2	3020	608	0.63
	0.4	2913	659	0.68
	0.6	2802	712	0.74
	0.8	2660	769	0.80
T8	0.2	3147	626	0.80
	0.4	3040	675	0.86
	0.6	2935	725	0.92
	0.8	2812	778	0.99
T9	0.2	3209	635	0.84
	0.4	3103	683	0.90
	0.6	3001	732	0.97
	0.8	2886	783	1.04
T10	0.2	3330	652	0.92
	0.4	3225	698	0.99
	0.6	3128	745	1.06
	0.8	3029	793	1.12

Shaded speed tap - Airflow for supplimental heat.
** (T1) and (T2) are part load only

7.5 Ton Cooler • Medium Static Direct Drive • Models: DSC0903L, DSC0904L, DSC0907L

Down Flow				
Speed Tap	ESP	CFM	RPM	BHP
T1**	0.2	2090	456	0.26
	0.4	1919	534	0.30
	0.6	1755	610	0.34
	0.8	-	-	-
	1	-	-	-
	1.2	-	-	-
	1.4	-	-	-
T2**	0.2	2700	529	0.50
	0.4	2552	594	0.56
	0.6	2413	658	0.62
	0.8	2214	730	0.69
	1	2022	792	0.75
	1.2	1865	845	0.80
	1.4	1727	880	0.83
T3	0.2	3370	612	0.87
	0.4	3246	663	0.94
	0.6	3129	715	1.01
	0.8	3002	768	1.09
	1	2864	822	1.16
	1.2	2733	872	1.24
	1.4	2612	915	1.30
T4	0.2	3552	634	0.99
	0.4	3433	683	1.06
	0.6	3321	732	1.14
	0.8	3210	781	1.22
	1	3083	832	1.30
	1.2	2959	881	1.37
	1.4	2843	926	1.44
T5	0.2	3668	649	1.07
	0.4	3552	696	1.15
	0.6	3443	743	1.23
	0.8	3340	789	1.30
	1	3221	839	1.39
	1.2	3100	888	1.47
	1.4	2987	933	1.54
T6	0.2	3212	592	0.77
	0.4	3083	647	0.84
	0.6	2961	701	0.91
	0.8	2819	758	0.98
	1	2670	814	1.06
	1.2	2533	865	1.12
	1.4	2408	906	1.18
T7	0.2	3370	612	0.87
	0.4	3246	663	0.94
	0.6	3129	715	1.01
	0.8	3002	768	1.09
	1	2864	822	1.16
	1.2	2733	872	1.24
	1.4	2612	915	1.30
T8	0.2	3492	627	0.95
	0.4	3371	676	1.02
	0.6	3258	727	1.10
	0.8	3142	776	1.17
	1	3012	829	1.25
	1.2	2885	878	1.33
	1.4	2768	922	1.39
T9	0.2	3552	634	0.99
	0.4	3433	683	1.06
	0.6	3321	732	1.14
	0.8	3210	781	1.22
	1	3083	832	1.30
	1.2	2959	881	1.37
	1.4	2843	926	1.44
T10	0.2	3668	649	1.07
	0.4	3552	696	1.15
	0.6	3443	743	1.23
	0.8	3340	789	1.30
	1	3221	839	1.39
	1.2	3100	888	1.47
	1.4	2987	933	1.54

Horizontal Flow				
Speed Tap	ESP	CFM	RPM	BHP
T1**	0.2	2106	475	0.27
	0.4	1998	545	0.31
	0.6	1835	622	0.35
	0.8	1525	712	0.40
	1	-	-	-
	1.2	-	-	-
	1.4	-	-	-
T2**	0.2	2687	559	0.53
	0.4	2579	617	0.58
	0.6	2450	678	0.64
	0.8	2253	746	0.70
	1	2091	807	0.76
	1.2	1951	857	0.81
	1.4	1757	916	0.86
T3	0.2	3330	652	0.92
	0.4	3225	698	0.99
	0.6	3128	745	1.06
	0.8	3029	793	1.12
	1	2911	844	1.20
	1.2	2803	891	1.26
	1.4	2621	952	1.35
T4	0.2	3504	678	1.06
	0.4	3401	721	1.12
	0.6	3312	764	1.19
	0.8	3233	808	1.26
	1	3125	857	1.34
	1.2	3024	902	1.41
	1.4	2849	963	1.50
T5	0.2	3616	694	1.15
	0.4	3514	736	1.22
	0.6	3430	777	1.29
	0.8	3362	818	1.35
	1	3259	865	1.43
	1.2	3163	910	1.50
	1.4	2994	970	1.60
T6	0.2	3178	630	0.82
	0.4	3072	679	0.88
	0.6	2968	729	0.95
	0.8	2849	781	1.01
	1	2721	835	1.08
	1.2	2606	882	1.14
	1.4	2420	943	1.22
T7	0.2	3330	652	0.92
	0.4	3225	698	0.99
	0.6	3128	745	1.06
	0.8	3029	793	1.12
	1	2911	844	1.20
	1.2	2803	891	1.26
	1.4	2621	952	1.35
T8	0.2	3447	670	1.01
	0.4	3343	714	1.08
	0.6	3252	758	1.15
	0.8	3167	803	1.21
	1	3055	853	1.29
	1.2	2952	898	1.36
	1.4	2775	959	1.45
T9	0.2	3504	678	1.06
	0.4	3401	721	1.12
	0.6	3312	764	1.19
	0.8	3233	808	1.26
	1	3125	857	1.34
	1.2	3024	902	1.41
	1.4	2849	963	1.50
T10	0.2	3616	694	1.15
	0.4	3514	736	1.22
	0.6	3430	777	1.29
	0.8	3362	818	1.35
	1	3259	865	1.43
	1.2	3163	910	1.50
	1.4	2994	970	1.60

Shaded speed tap - Airflow for supplimental heat.
** (T1) and (T2) are part load only

7.5 Ton Cooler • High Static Direct Drive • Models: DSC0903W, DSC0904W, DSC0907W

Down Flow				
Speed Tap	ESP	CFM	RPM	BHP
T1	0.2	2402.9	493.3	0.37
	0.4	2244.2	564.3	0.42
	0.6	2093.4	634.4	0.48
	0.8	1855.9	715.7	0.54
	1	1637.8	781.2	0.59
	1.2	-	-	-
	1.4	-	-	-
	1.6	-	-	-
	1.8	-	-	-
T2	0.2	2553.2	511.5	0.43
	0.4	2400.3	579.3	0.49
	0.6	2255.6	646.3	0.55
	0.8	2037.8	722.7	0.61
	1	1833.5	786.4	0.67
	1.2	-	-	-
	1.4	-	-	-
	1.6	-	-	-
	1.8	-	-	-
T3	0.2	3551.9	634.1	0.99
	0.4	3432.6	682.8	1.06
	0.6	3320.8	732.1	1.14
	0.8	3209.7	780.5	1.22
	1	3083.3	832.2	1.30
	1.2	2958.7	881.4	1.37
	1.4	2842.8	925.7	1.44
	1.6	2620.1	989.9	1.54
	1.8	2488.5	1038.8	1.62
T4	0.2	3779.7	662.7	1.16
	0.4	3666.4	708.0	1.24
	0.6	3560.0	753.8	1.32
	0.8	3464.9	797.6	1.39
	1	3351.7	846.6	1.48
	1.2	3235.1	894.3	1.56
	1.4	3124.7	939.8	1.64
	1.6	2913.7	992.3	1.74
	1.8	2808.6	1041.8	1.82
T5	0.2	3861.0	673.0	1.22
	0.4	3749.6	717.2	1.31
	0.6	3644.7	761.8	1.39
	0.8	3554.3	804.2	1.46
	1	3445.4	852.2	1.55
	1.2	3331.5	899.3	1.64
	1.4	3223.0	945.1	1.72
	1.6	3017.3	994.0	1.81
	1.8	2920.1	1043.4	1.90

Horizontal Flow				
Speed Tap	ESP	CFM	RPM	BHP
T1	0.2	2404.3	518.5	0.39
	0.4	2295.7	581.7	0.44
	0.6	2150.4	650.1	0.49
	0.8	1901.0	728.4	0.55
	1	1717.1	794.1	0.60
	1.2	1561.5	845.1	0.64
	1.4	-	-	-
	1.6	-	-	-
	1.8	-	-	-
T2	0.2	2547.7	539.2	0.46
	0.4	2439.1	599.5	0.51
	0.6	2302.2	664.1	0.56
	0.8	2080.1	737.0	0.62
	1	1907.1	800.5	0.68
	1.2	1759.9	851.0	0.72
	1.4	-	-	-
	1.6	-	-	-
	1.8	-	-	-
T3	0.2	3504.1	677.8	1.06
	0.4	3400.9	721.1	1.12
	0.6	3312.2	764.4	1.19
	0.8	3233.1	807.6	1.26
	1	3124.7	856.7	1.34
	1.2	3023.9	901.9	1.41
	1.4	2849.3	962.7	1.50
	1.6	2727.6	1009.2	1.57
	1.8	2574.8	1058.8	1.65
T4	0.2	3723.7	709.9	1.24
	0.4	3623.4	750.1	1.31
	0.6	3543.2	789.8	1.38
	0.8	3484.0	828.2	1.45
	1	3387.6	873.9	1.53
	1.2	3294.3	917.4	1.60
	1.4	3131.8	976.5	1.71
	1.6	3015.0	1022.5	1.79
	1.8	2893.4	1063.4	1.86
T5	0.2	3802.1	721.3	1.31
	0.4	3703.2	760.6	1.38
	0.6	3625.6	799.2	1.45
	0.8	3571.9	836.0	1.52
	1	3479.4	880.6	1.60
	1.2	3388.4	923.5	1.68
	1.4	3231.2	981.6	1.79
	1.6	3116.5	1027.3	1.87
	1.8	3004.5	1065.6	1.94

7.5 Ton Cooler • High Static Direct Drive • Models: DSC0903W, DSC0904W, DSC0907W

Down Flow				
Speed Tap	ESP	CFM	RPM	BHP
T6	0.2	3431.9	619.2	0.91
	0.4	3309.1	669.9	0.98
	0.6	3194.2	721.0	1.06
	0.8	3073.0	772.2	1.13
	1	2938.8	825.4	1.21
	1.2	2809.9	875.3	1.28
	1.4	2691.0	918.6	1.35
	1.6	2463.8	989.6	1.45
	1.8	2316.0	1038.1	1.52
T7	0.2	3581.3	637.8	1.01
	0.4	3462.7	686.0	1.09
	0.6	3351.8	734.8	1.16
	0.8	3242.9	782.6	1.24
	1	3118.3	833.9	1.32
	1.2	2994.8	883.0	1.40
	1.4	2879.6	927.5	1.47
	1.6	2658.1	990.0	1.57
	1.8	2530.3	1039.1	1.64
T8	0.2	3724.3	655.7	1.12
	0.4	3609.6	701.8	1.19
	0.6	3501.9	748.4	1.27
	0.8	3403.3	793.3	1.35
	1	3287.2	842.9	1.43
	1.2	3168.7	891.0	1.52
	1.4	3056.9	936.3	1.59
	1.6	2842.7	991.5	1.69
	1.8	2731.7	1040.9	1.77
T9	0.2	3779.7	662.7	1.16
	0.4	3666.4	708.0	1.24
	0.6	3560.0	753.8	1.32
	0.8	3464.9	797.6	1.39
	1	3351.7	846.6	1.48
	1.2	3235.1	894.3	1.56
	1.4	3124.7	939.8	1.64
	1.6	2913.7	992.3	1.74
	1.8	2808.6	1041.8	1.82
T10	0.2	3861.0	673.0	1.22
	0.4	3749.6	717.2	1.31
	0.6	3644.7	761.8	1.39
	0.8	3554.3	804.2	1.46
	1	3445.4	852.2	1.55
	1.2	3331.5	899.3	1.64
	1.4	3223.0	945.1	1.72
	1.6	3017.3	994.0	1.81
	1.8	2920.1	1043.4	1.90

Horizontal Flow				
Speed Tap	ESP	CFM	RPM	BHP
T6	0.2	3388.8	661.0	0.97
	0.4	3284.3	706.1	1.03
	0.6	3190.6	751.5	1.10
	0.8	3098.7	797.6	1.17
	1	2983.6	848.4	1.24
	1.2	2878.2	894.4	1.31
	1.4	2698.6	955.7	1.40
	1.6	2574.7	1002.2	1.47
	1.8	2403.4	1057.1	1.55
T7	0.2	3532.4	682.0	1.08
	0.4	3429.5	724.8	1.15
	0.6	3341.9	767.6	1.22
	0.8	3265.7	810.1	1.28
	1	3159.0	858.8	1.36
	1.2	3059.2	903.8	1.43
	1.4	2886.0	964.5	1.53
	1.6	2764.9	1010.9	1.60
	1.8	2616.4	1059.3	1.68
T8	0.2	3670.2	702.1	1.19
	0.4	3569.2	743.0	1.26
	0.6	3486.9	783.5	1.33
	0.8	3423.5	823.0	1.40
	1	3324.3	869.5	1.48
	1.2	3229.3	913.5	1.55
	1.4	3063.6	973.1	1.66
	1.6	2945.5	1019.3	1.73
	1.8	2816.7	1062.1	1.81
T9	0.2	3723.7	709.9	1.24
	0.4	3623.4	750.1	1.31
	0.6	3543.2	789.8	1.38
	0.8	3484.0	828.2	1.45
	1	3387.6	873.9	1.53
	1.2	3294.3	917.4	1.60
	1.4	3131.8	976.5	1.71
	1.6	3015.0	1022.5	1.79
	1.8	2893.4	1063.4	1.86
T10	0.2	3802.1	721.3	1.31
	0.4	3703.2	760.6	1.38
	0.6	3625.6	799.2	1.45
	0.8	3571.9	836.0	1.52
	1	3479.4	880.6	1.60
	1.2	3388.4	923.5	1.68
	1.4	3231.2	981.6	1.79
	1.6	3116.5	1027.3	1.87
	1.8	3004.5	1065.6	1.94

Shaded speed tap - Airflow for supplimental heat.
** (T1) and (T2) are part load only

8.5 Ton Cooler • Standard Static Direct Drive • Models: DSC1023D, DSC1024D, DSC1027D

Down Flow				
Speed Tap	**ESP**	**CFM**	**RPM**	**BHP**
T1**	0.2	2090	456	0.26
	0.4	1919	534	0.30
	0.6	1755	610	0.34
	0.8	-	-	-
T2**	0.2	2248	475	0.31
	0.4	2084	549	0.36
	0.6	1927	622	0.41
	0.8	-	-	-
T3	0.2	3295	602	0.82
	0.4	3168	655	0.89
	0.6	3049	709	0.96
	0.8	2916	763	1.04
T4	0.2	3628	644	1.04
	0.4	3510	691	1.12
	0.6	3401	739	1.20
	0.8	3295	786	1.27
T5	0.2	3724	656	1.12
	0.4	3610	702	1.19
	0.6	3502	748	1.27
	0.8	3403	793	1.35
T6	0.2	3114	580	0.71
	0.4	2981	636	0.78
	0.6	2857	693	0.85
	0.8	2705	752	0.92
T7	0.2	3320	605	0.74
	0.4	3194	658	0.81
	0.6	3076	711	0.87
	0.8	2945	765	0.94
T8	0.2	3462	623	0.93
	0.4	3340	673	1.00
	0.6	3226	724	1.08
	0.8	3108	774	1.15
T9	0.2	3628	644	1.04
	0.4	3510	691	1.12
	0.6	3401	739	1.20
	0.8	3295	786	1.27
T10	0.2	3724	656	1.12
	0.4	3610	702	1.19
	0.6	3502	748	1.27
	0.8	3403	793	1.35

Horizontal Flow				
Speed Tap	**ESP**	**CFM**	**RPM**	**BHP**
T1**	0.2	2106	475	0.27
	0.4	1998	545	0.31
	0.6	1835	622	0.35
	0.8	-	-	-
T2**	0.2	2257	497	0.33
	0.4	2149	564	0.37
	0.6	1995	636	0.42
	0.8	1716	720	0.47
T3	0.2	3258	642	0.87
	0.4	3152	689	0.94
	0.6	3052	737	1.00
	0.8	2944	787	1.07
T4	0.2	3577	688	1.12
	0.4	3475	731	1.18
	0.6	3389	773	1.25
	0.8	3317	814	1.32
T5	0.2	3670	702	1.19
	0.4	3569	743	1.26
	0.6	3487	784	1.33
	0.8	3423	823	1.40
T6	0.2	3084	617	0.76
	0.4	2977	667	0.82
	0.6	2869	719	0.88
	0.8	2737	773	0.95
T7	0.2	3282	645	0.79
	0.4	3176	692	0.85
	0.6	3078	740	0.91
	0.8	2973	789	0.97
T8	0.2	3418	665	0.99
	0.4	3314	710	1.06
	0.6	3221	755	1.12
	0.8	3133	800	1.19
T9	0.2	3577	688	1.12
	0.4	3475	731	1.18
	0.6	3389	773	1.25
	0.8	3317	814	1.32
T10	0.2	3670	702	1.19
	0.4	3569	743	1.26
	0.6	3487	784	1.33
	0.8	3423	823	1.40

Shaded speed tap - Airflow for supplimental heat.
** (T1) and (T2) are part load only

8.5 Ton Cooler • Medium Static Direct Drive • Models: DSC1023L, DSC1024L, DSC1027L

Down Flow				
Speed Tap	ESP	CFM	RPM	BHP
T1**	0.2	2209	470	0.30
	0.4	2043	545	0.35
	0.6	1884	619	0.39
	0.8	-	-	-
	1	-	-	-
	1.2	-	-	-
	1.4	-	-	-
T2**	0.2	2418	495	0.38
	0.4	2260	566	0.43
	0.6	2110	636	0.48
	0.8	1874	716	0.55
	1	-	-	-
	1.2	-	-	-
	1.4	-	-	-
T3	0.2	3552	634	0.99
	0.4	3433	683	1.06
	0.6	3321	732	1.14
	0.8	3210	781	1.22
	1	3083	832	1.30
	1.2	2959	881	1.37
	1.4	2843	926	1.44
T4	0.2	3914	680	1.27
	0.4	3804	723	1.35
	0.6	3700	767	1.43
	0.8	3612	809	1.51
	1	3506	856	1.60
	1.2	3393	903	1.69
	1.4	3286	949	1.77
T5	0.2	4002	691	1.35
	0.4	3893	733	1.43
	0.6	3791	776	1.51
	0.8	3707	816	1.59
	1	3604	863	1.68
	1.2	3495	909	1.77
	1.4	3390	955	1.86
T6	0.2	3450	621	0.92
	0.4	3328	672	0.99
	0.6	3213	723	1.07
	0.8	3094	773	1.14
	1	2961	826	1.22
	1.2	2833	876	1.30
	1.4	2714	920	1.36
T7	0.2	3651	647	1.06
	0.4	3534	694	1.14
	0.6	3425	741	1.22
	0.8	3321	788	1.29
	1	3201	838	1.37
	1.2	3080	887	1.45
	1.4	2966	932	1.53
T8	0.2	3791	664	1.17
	0.4	3678	709	1.25
	0.6	3571	755	1.33
	0.8	3477	798	1.40
	1	3364	847	1.49
	1.2	3248	895	1.57
	1.4	3138	940	1.65
T9	0.2	3914	680	1.27
	0.4	3804	723	1.35
	0.6	3700	767	1.43
	0.8	3612	809	1.51
	1	3506	856	1.60
	1.2	3393	903	1.69
	1.4	3286	949	1.77
T10	0.2	4002	691	1.35
	0.4	3893	733	1.43
	0.6	3791	776	1.51
	0.8	3707	816	1.59
	1	3604	863	1.68
	1.2	3495	909	1.77
	1.4	3390	955	1.86

Horizontal Flow				
Speed Tap	ESP	CFM	RPM	BHP
T1**	0.2	2220	492	0.31
	0.4	2111	559	0.35
	0.6	1955	632	0.40
	0.8	-	-	-
	1	-	-	-
	1.2	-	-	-
	1.4	-	-	-
T2**	0.2	2419	521	0.40
	0.4	2310	584	0.44
	0.6	2166	651	0.50
	0.8	1919	729	0.56
	1	1736	795	0.61
	1.2	-	-	-
	1.4	-	-	-
T3	0.2	3504	678	1.06
	0.4	3401	721	1.12
	0.6	3312	764	1.19
	0.8	3233	808	1.26
	1	3125	857	1.34
	1.2	3024	902	1.41
	1.4	2849	963	1.50
T4	0.2	3853	729	1.36
	0.4	3755	767	1.43
	0.6	3679	805	1.50
	0.8	3629	841	1.57
	1	3539	885	1.65
	1.2	3449	928	1.73
	1.4	3296	985	1.84
T5	0.2	3938	741	1.44
	0.4	3842	779	1.52
	0.6	3768	816	1.59
	0.8	3722	850	1.66
	1	3635	893	1.74
	1.2	3548	935	1.82
	1.4	3401	991	1.93
T6	0.2	3406	664	0.98
	0.4	3302	708	1.05
	0.6	3209	753	1.11
	0.8	3119	799	1.18
	1	3005	850	1.26
	1.2	2900	896	1.32
	1.4	2722	957	1.41
T7	0.2	3599	692	1.13
	0.4	3497	734	1.20
	0.6	3412	775	1.27
	0.8	3343	816	1.34
	1	3240	864	1.42
	1.2	3142	908	1.49
	1.4	2972	969	1.59
T8	0.2	3734	711	1.25
	0.4	3634	751	1.32
	0.6	3554	791	1.39
	0.8	3496	829	1.46
	1	3400	875	1.54
	1.2	3307	918	1.61
	1.4	3145	977	1.72
T9	0.2	3853	729	1.36
	0.4	3755	767	1.43
	0.6	3679	805	1.50
	0.8	3629	841	1.57
	1	3539	885	1.65
	1.2	3449	928	1.73
	1.4	3296	985	1.84
T10	0.2	3938	741	1.44
	0.4	3842	779	1.52
	0.6	3768	816	1.59
	0.8	3722	850	1.66
	1	3635	893	1.74
	1.2	3548	935	1.82
	1.4	3401	991	1.93

Shaded speed tap - Airflow for supplimental heat.
** (T1) and (T2) are part load only

8.5 Ton Cooler • High Static Direct Drive • Models: DSC1023W, DSC1024W, DSC1027W

Down Flow				
Speed Tap	ESP	CFM	RPM	BHP
T1**	0.2	2349	487	0.35
	0.4	2188	559	0.40
	0.6	2036	630	0.45
	0.8	1791	713	0.51
	1	-	-	-
	1.2	-	-	-
	1.4	-	-	-
	1.6	-	-	-
	1.8	-	-	-
T2**	0.2	2553	512	0.43
	0.4	2400	579	0.49
	0.6	2256	646	0.55
	0.8	2038	723	0.61
	1	1833	786	0.67
	1.2	-	-	-
	1.4	-	-	-
	1.6	-	-	-
	1.8	-	-	-
T3	0.2	3724	656	1.12
	0.4	3610	702	1.19
	0.6	3502	748	1.27
	0.8	3403	793	1.35
	1	3287	843	1.43
	1.2	3169	891	1.52
	1.4	3057	936	1.59
	1.6	2843	991	1.69
	1.8	2732	1041	1.77
T4	0.2	4163	712	1.50
	0.4	4058	752	1.58
	0.6	3957	793	1.67
	0.8	3878	832	1.75
	1	3781	876	1.84
	1.2	3677	921	1.94
	1.4	3576	966	2.03
	1.6	3396	1004	2.11
	1.8	3320	1053	2.22
T5	0.2	4233	721	1.57
	0.4	4129	761	1.66
	0.6	4029	801	1.74
	0.8	3951	839	1.82
	1	3856	882	1.92
	1.2	3754	926	2.02
	1.4	3654	971	2.11
	1.6	3482	1008	2.19
	1.8	3408	1055	2.30

Horizontal Flow				
Speed Tap	ESP	CFM	RPM	BHP
T1**	0.2	2353	511	0.37
	0.4	2245	575	0.41
	0.6	2096	645	0.46
	0.8	1837	725	0.52
	1	-	-	-
	1.2	-	-	-
	1.4	-	-	-
	1.6	-	-	-
	1.8	-	-	-
T2**	0.2	2548	539	0.46
	0.4	2439	599	0.51
	0.6	2302	664	0.56
	0.8	2080	737	0.62
	1	1907	801	0.68
	1.2	1760	851	0.72
	1.4	-	-	-
	1.6	-	-	-
	1.8	-	-	-
T3	0.2	3670	702	1.19
	0.4	3569	743	1.26
	0.6	3487	784	1.33
	0.8	3423	823	1.40
	1	3324	869	1.48
	1.2	3229	913	1.55
	1.4	3064	973	1.66
	1.6	2945	1019	1.73
	1.8	2817	1062	1.81
T4	0.2	4095	764	1.61
	0.4	4002	800	1.68
	0.6	3933	836	1.76
	0.8	3890	869	1.83
	1	3810	909	1.91
	1.2	3726	949	2.00
	1.4	3593	1002	2.11
	1.6	3488	1045	2.20
	1.8	3404	1077	2.27
T5	0.2	4163	774	1.68
	0.4	4072	810	1.76
	0.6	4004	845	1.84
	0.8	3961	877	1.91
	1	3884	916	1.99
	1.2	3800	956	2.08
	1.4	3675	1007	2.19
	1.6	3572	1049	2.28
	1.8	3492	1080	2.35

8.5 Ton Cooler • High Static Direct Drive • Models: DSC1023W, DSC1024W, DSC1027W

Down Flow				
Speed Tap	ESP	CFM	RPM	BHP
T6	0.2	3656	647	1.06
	0.4	3540	694	1.14
	0.6	3431	742	1.22
	0.8	3327	788	1.30
	1	3207	839	1.38
	1.2	3087	887	1.46
	1.4	2973	932	1.53
	1.6	2755	991	1.63
	1.8	2637	1040	1.71
T7	0.2	3840	670	1.21
	0.4	3728	715	1.29
	0.6	3622	760	1.37
	0.8	3531	802	1.45
	1	3421	851	1.53
	1.2	3306	898	1.62
	1.4	3197	944	1.70
	1.6	2990	993	1.79
	1.8	2891	1043	1.88
T8	0.2	3966	686	1.31
	0.4	3857	729	1.40
	0.6	3754	772	1.48
	0.8	3668	813	1.56
	1	3564	860	1.65
	1.2	3454	906	1.74
	1.4	3348	952	1.82
	1.6	3150	997	1.91
	1.8	3062	1046	2.00
T9	0.2	4163	712	1.50
	0.4	4058	752	1.58
	0.6	3957	793	1.67
	0.8	3878	832	1.75
	1	3781	876	1.84
	1.2	3677	921	1.94
	1.4	3576	966	2.03
	1.6	3396	1004	2.11
	1.8	3320	1053	2.22
T10	0.2	4233	721	1.57
	0.4	4129	761	1.66
	0.6	4029	801	1.74
	0.8	3951	839	1.82
	1	3856	882	1.92
	1.2	3754	926	2.02
	1.4	3654	971	2.11
	1.6	3482	1008	2.19
	1.8	3408	1055	2.30

Horizontal Flow				
Speed Tap	ESP	CFM	RPM	BHP
T6	0.2	3605	693	1.14
	0.4	3503	734	1.21
	0.6	3418	776	1.28
	0.8	3349	817	1.34
	1	3246	864	1.42
	1.2	3149	909	1.49
	1.4	2980	969	1.59
	1.6	2860	1015	1.67
	1.8	2722	1061	1.74
T7	0.2	3781	718	1.29
	0.4	3682	758	1.36
	0.6	3604	797	1.43
	0.8	3549	834	1.50
	1	3455	879	1.58
	1.2	3364	922	1.66
	1.4	3205	980	1.77
	1.6	3090	1026	1.85
	1.8	2975	1065	1.92
T8	0.2	3903	736	1.41
	0.4	3806	774	1.48
	0.6	3732	812	1.55
	0.8	3684	847	1.62
	1	3596	890	1.70
	1.2	3508	932	1.78
	1.4	3358	988	1.89
	1.6	3246	1034	1.98
	1.8	3146	1069	2.05
T9	0.2	4095	764	1.61
	0.4	4002	800	1.68
	0.6	3933	836	1.76
	0.8	3890	869	1.83
	1	3810	909	1.91
	1.2	3726	949	2.00
	1.4	3593	1002	2.11
	1.6	3488	1045	2.20
	1.8	3404	1077	2.27
T10	0.2	4163	774	1.68
	0.4	4072	810	1.76
	0.6	4004	845	1.84
	0.8	3961	877	1.91
	1	3884	916	1.99
	1.2	3800	956	2.08
	1.4	3675	1007	2.19
	1.6	3572	1049	2.28
	1.8	3492	1080	2.35

Shaded speed tap - Airflow for supplimental heat.
** (T1) and (T2) are part load only

10 Ton Cooler • Standard Static Direct Drive • Models: DSC1203D, DSC1204D, DSC1207D

Down Flow				
Speed Tap	ESP	CFM	RPM	BHP
T1**	0.2	2154	434	0.24
	0.4	-	-	-
	0.6	-	-	-
	0.8	-	-	-
T2**	0.2	2471	467	0.34
	0.4	2293	546	0.40
	0.6	-	-	-
	0.8	-	-	-
T3	0.2	3558	579	0.85
	0.4	3437	642	0.94
	0.6	3284	702	1.03
	0.8	3163	755	1.11
T4	0.2	4203	647	1.29
	0.4	4100	701	1.39
	0.6	4010	746	1.48
	0.8	3903	796	1.58
T5	0.2	4308	659	1.37
	0.4	4207	711	1.48
	0.6	4122	755	1.57
	0.8	4015	804	1.67
T6	0.2	3720	596	0.95
	0.4	3606	656	1.04
	0.6	3473	712	1.13
	0.8	3357	764	1.21
T7	0.2	3992	625	0.99
	0.4	3886	681	1.08
	0.6	3781	730	1.16
	0.8	3671	782	1.24
T8	0.2	4192	646	1.28
	0.4	4090	700	1.38
	0.6	3999	745	1.47
	0.8	3891	795	1.57
T9	0.2	4203	647	1.29
	0.4	4100	701	1.39
	0.6	4010	746	1.48
	0.8	3903	796	1.58
T10	0.2	4308	659	1.37
	0.4	4207	711	1.48
	0.6	4122	755	1.57
	0.8	4015	804	1.67

Horizontal Flow				
Speed Tap	ESP	CFM	RPM	BHP
T1**	0.2	2099	440	0.24
	0.4	-	-	-
	0.6	-	-	-
	0.8	-	-	-
T2**	0.2	2397	475	0.35
	0.4	2148	578	0.42
	0.6	-	-	-
	0.8	-	-	-
T3	0.2	3419	596	0.87
	0.4	3306	652	0.95
	0.6	3143	717	1.05
	0.8	3020	766	1.12
T4	0.2	4026	671	1.33
	0.4	3950	710	1.41
	0.6	3823	764	1.52
	0.8	3713	809	1.61
T5	0.2	4125	683	1.42
	0.4	4051	721	1.50
	0.6	3927	773	1.61
	0.8	3818	817	1.70
T6	0.2	3572	615	0.98
	0.4	3472	665	1.06
	0.6	3319	728	1.15
	0.8	3201	776	1.23
T7	0.2	3828	646	1.03
	0.4	3745	690	1.09
	0.6	3607	747	1.19
	0.8	3495	794	1.26
T8	0.2	4016	669	1.32
	0.4	3940	709	1.40
	0.6	3812	763	1.51
	0.8	3702	808	1.60
T9	0.2	4026	671	1.33
	0.4	3950	710	1.41
	0.6	3823	764	1.52
	0.8	3713	809	1.61
T10	0.2	4125	683	1.42
	0.4	4051	721	1.50
	0.6	3927	773	1.61
	0.8	3818	817	1.70

Shaded speed tap - Airflow for supplimental heat.
** (T1) and (T2) are part load only

10 Ton Cooler • Medium Static Direct Drive • Models: DSC1203L, DSC1204L, DSC1207L

Down Flow				
Speed Tap	ESP	CFM	RPM	BHP
T1**	0.2	2471	467	0.34
	0.4	2293	546	0.40
	0.6	-	-	-
	0.8	-	-	-
	1	-	-	-
	1.2	-	-	-
	1.4	-	-	-
T2**	0.2	2789	499	0.46
	0.4	2630	574	0.53
	0.6	2351	663	0.61
	0.8	2195	717	0.66
	1	-	-	-
	1.2	-	-	-
	1.4	-	-	-
T3	0.2	3865	611	1.02
	0.4	3755	669	1.12
	0.6	3637	721	1.20
	0.8	3525	773	1.29
	1	3322	842	1.41
	1.2	3193	893	1.49
	1.4	2945	965	1.61
T4	0.2	4556	686	1.56
	0.4	4456	734	1.67
	0.6	4374	777	1.77
	0.8	4265	824	1.87
	1	4121	879	2.00
	1.2	4013	926	2.10
	1.4	3807	987	2.24
T5	0.2	4738	706	1.74
	0.4	4636	752	1.85
	0.6	4547	796	1.96
	0.8	4434	841	2.07
	1	4311	889	2.19
	1.2	4201	934	2.30
	1.4	4020	987	2.43
T6	0.2	4203	647	1.26
	0.4	4100	701	1.37
	0.6	4010	746	1.45
	0.8	3903	796	1.55
	1	3725	860	1.68
	1.2	3611	909	1.77
	1.4	3375	979	1.91
T7	0.2	4360	664	1.39
	0.4	4259	715	1.49
	0.6	4175	759	1.59
	0.8	4068	808	1.69
	1	3905	869	1.81
	1.2	3795	916	1.91
	1.4	3569	984	2.05
T8	0.2	4460	675	1.47
	0.4	4360	725	1.58
	0.6	4278	768	1.68
	0.8	4170	816	1.78
	1	4016	874	1.91
	1.2	3908	921	2.01
	1.4	3691	986	2.15
T9	0.2	4556	686	1.56
	0.4	4456	734	1.67
	0.6	4374	777	1.77
	0.8	4265	824	1.87
	1	4121	879	2.00
	1.2	4013	926	2.10
	1.4	3807	987	2.24
T10	0.2	4738	706	1.74
	0.4	4636	752	1.85
	0.6	4547	796	1.96
	0.8	4434	841	2.07
	1	4311	889	2.19
	1.2	4201	934	2.30
	1.4	4020	987	2.43

Horizontal Flow				
Speed Tap	ESP	CFM	RPM	BHP
T1**	0.2	2397	475	0.34
	0.4	2148	578	0.42
	0.6	-	-	-
	0.8	-	-	-
	1	-	-	-
	1.2	-	-	-
	1.4	-	-	-
T2**	0.2	2696	510	0.47
	0.4	2493	597	0.55
	0.6	2272	674	0.62
	0.8	2116	726	0.67
	1	-	-	-
	1.2	-	-	-
	1.4	-	-	-
T3	0.2	3707	631	1.05
	0.4	3617	678	1.13
	0.6	3473	738	1.23
	0.8	3359	785	1.31
	1	3125	864	1.44
	1.2	2912	925	1.55
	1.4	2750	974	1.63
T4	0.2	4359	712	1.62
	0.4	4281	749	1.70
	0.6	4164	796	1.81
	0.8	4053	838	1.91
	1	3889	900	2.05
	1.2	3711	955	2.17
	1.4	3593	1003	2.28
T5	0.2	4530	734	1.81
	0.4	4442	772	1.90
	0.6	4328	815	2.01
	0.8	4213	855	2.10
	1	4078	908	2.23
	1.2	3914	961	2.36
	1.4	3807	1007	2.48
T6	0.2	4026	671	1.31
	0.4	3950	710	1.38
	0.6	3823	764	1.49
	0.8	3713	809	1.58
	1	3507	882	1.72
	1.2	3308	941	1.83
	1.4	3167	990	1.93
T7	0.2	4173	689	1.44
	0.4	4099	727	1.52
	0.6	3978	777	1.62
	0.8	3868	821	1.72
	1	3679	890	1.86
	1.2	3489	947	1.98
	1.4	3357	997	2.08
T8	0.2	4268	701	1.53
	0.4	4192	738	1.61
	0.6	4074	787	1.72
	0.8	3964	829	1.81
	1	3787	895	1.95
	1.2	3603	951	2.08
	1.4	3478	1000	2.18
T9	0.2	4359	712	1.62
	0.4	4281	749	1.70
	0.6	4164	796	1.81
	0.8	4053	838	1.91
	1	3889	900	2.05
	1.2	3711	955	2.17
	1.4	3593	1003	2.28
T10	0.2	4530	734	1.81
	0.4	4442	772	1.90
	0.6	4328	815	2.01
	0.8	4213	855	2.10
	1	4078	908	2.23
	1.2	3914	961	2.36
	1.4	3807	1007	2.48

Shaded speed tap - Airflow for supplimental heat.
** (T1) and (T2) are part load only

10 Ton Cooler • High Static Direct Drive • Models: DSC1203W, DSC1204W, DSC1207W

Down Flow				
Speed Tap	ESP	CFM	RPM	BHP
T1**	0.2	2587	478	0.38
	0.4	2415	556	0.44
	0.6	2097	654	0.52
	0.8	-	-	-
	1	-	-	-
	1.2	-	-	-
	1.4	-	-	-
	1.6	-	-	-
	1.8	-	-	-
T2**	0.2	2877	508	0.50
	0.4	2723	581	0.57
	0.6	2460	667	0.65
	0.8	2309	721	0.70
	1	2054	793	0.77
	1.2	-	-	-
	1.4	-	-	-
	1.6	-	-	-
	1.8	-	-	-
T3	0.2	3998	625	1.11
	0.4	3892	682	1.21
	0.6	3787	730	1.30
	0.8	3677	782	1.39
	1	3483	849	1.51
	1.2	3361	899	1.60
	1.4	3117	972	1.73
	1.6	2989	1014	1.80
	1.8	2684	1082	1.92
T4	0.2	4824	715	1.83
	0.4	4719	761	1.94
	0.6	4625	806	2.06
	0.8	4508	849	2.17
	1	4396	894	2.28
	1.2	4284	937	2.39
	1.4	4117	985	2.52
	1.6	4008	1028	2.62
	1.8	3799	1085	2.77
T5	0.2	4950	730	1.97
	0.4	4840	774	2.09
	0.6	4732	821	2.21
	0.8	4609	863	2.33
	1	4515	901	2.43
	1.2	4398	943	2.54
	1.4	4256	982	2.65
	1.6	4147	1025	2.76
	1.8	4001	1075	2.90

Horizontal Flow				
Speed Tap	ESP	CFM	RPM	BHP
T1**	0.2	2506	488	0.39
	0.4	2274	585	0.46
	0.6	2035	664	0.53
	0.8	-	-	-
	1	-	-	-
	1.2	-	-	-
	1.4	-	-	-
	1.6	-	-	-
	1.8	-	-	-
T2**	0.2	2778	520	0.51
	0.4	2588	603	0.59
	0.6	2374	678	0.66
	0.8	2222	731	0.71
	1	-	-	-
	1.2	-	-	-
	1.4	-	-	-
	1.6	-	-	-
	1.8	-	-	-
T3	0.2	3833	647	1.15
	0.4	3750	690	1.23
	0.6	3613	747	1.33
	0.8	3501	794	1.41
	1	3277	871	1.55
	1.2	3070	932	1.66
	1.4	2915	981	1.74
	1.6	2633	1046	1.86
	1.8	2422	1092	1.94
T4	0.2	4611	744	1.90
	0.4	4515	784	2.00
	0.6	4401	825	2.11
	0.8	4283	864	2.20
	1	4163	912	2.33
	1.2	4007	963	2.46
	1.4	3907	1009	2.57
	1.6	3680	1059	2.70
	1.8	3495	1113	2.84
T5	0.2	4729	760	2.05
	0.4	4618	803	2.16
	0.6	4503	841	2.27
	0.8	4379	878	2.37
	1	4285	917	2.47
	1.2	4142	967	2.61
	1.4	4050	1010	2.72
	1.6	3854	1053	2.84
	1.8	3679	1109	2.99

10 Ton Cooler • High Static Direct Drive • Models: DSC1203W, DSC1204W, DSC1207W

Down Flow				
Speed Tap	ESP	CFM	RPM	BHP
T6	0.2	3876	612	1.03
	0.4	3767	670	1.13
	0.6	3651	722	1.21
	0.8	3539	774	1.30
	1	3336	843	1.42
	1.2	3208	893	1.50
	1.4	2960	966	1.62
	1.6	2828	1008	1.69
	1.8	2541	1075	1.81
T7	0.2	4094	636	1.18
	0.4	3989	690	1.28
	0.6	3892	738	1.37
	0.8	3784	788	1.46
	1	3597	854	1.59
	1.2	3479	904	1.68
	1.4	3238	976	1.81
	1.6	3113	1018	1.89
	1.8	2800	1087	2.02
T8	0.2	4277	655	1.32
	0.4	4176	708	1.43
	0.6	4089	752	1.51
	0.8	3982	802	1.61
	1	3811	864	1.74
	1.2	3699	913	1.84
	1.4	3468	982	1.98
	1.6	3348	1024	2.06
	1.8	3029	1094	2.20
T9	0.2	4824	715	1.83
	0.4	4719	761	1.94
	0.6	4625	806	2.06
	0.8	4508	849	2.17
	1	4396	894	2.28
	1.2	4284	937	2.39
	1.4	4117	985	2.52
	1.6	4008	1028	2.62
	1.8	3799	1085	2.77
T10	0.2	4950	730	1.97
	0.4	4840	774	2.09
	0.6	4732	821	2.21
	0.8	4609	863	2.33
	1	4515	901	2.43
	1.2	4398	943	2.54
	1.4	4256	982	2.65
	1.6	4147	1025	2.76
	1.8	4001	1075	2.90

Horizontal Flow				
Speed Tap	ESP	CFM	RPM	BHP
T6	0.2	3719	633	1.06
	0.4	3629	679	1.14
	0.6	3486	738	1.24
	0.8	3371	786	1.32
	1	3138	864	1.45
	1.2	2926	926	1.56
	1.4	2764	975	1.64
	1.6	2489	1039	1.75
	1.8	2277	1083	1.82
T7	0.2	3923	658	1.22
	0.4	3844	699	1.30
	0.6	3712	755	1.40
	0.8	3601	801	1.49
	1	3385	876	1.63
	1.2	3181	936	1.74
	1.4	3033	986	1.83
	1.6	2749	1051	1.95
	1.8	2538	1097	2.04
T8	0.2	4096	679	1.37
	0.4	4021	718	1.45
	0.6	3897	770	1.55
	0.8	3787	815	1.64
	1	3589	886	1.78
	1.2	3394	944	1.90
	1.4	3257	994	2.00
	1.6	2973	1058	2.13
	1.8	2765	1106	2.23
T9	0.2	4611	744	1.90
	0.4	4515	784	2.00
	0.6	4401	825	2.11
	0.8	4283	864	2.20
	1	4163	912	2.33
	1.2	4007	963	2.46
	1.4	3907	1009	2.57
	1.6	3680	1059	2.70
	1.8	3495	1113	2.84
T10	0.2	4729	760	2.05
	0.4	4618	803	2.16
	0.6	4503	841	2.27
	0.8	4379	878	2.37
	1	4285	917	2.47
	1.2	4142	967	2.61
	1.4	4050	1010	2.72
	1.6	3854	1053	2.84
	1.8	3679	1109	2.99

Shaded speed tap - Airflow for supplimental heat.
** (T1) and (T2) are part load only

12.5 Ton Cooler • Standard Static Direct Drive • Models: DSC1503D, DSC1504D, DSC1507D

Down Flow				
Speed Tap	ESP	CFM	RPM	BHP
T1**	0.2	2158	454	0.25
	0.4	1860	565	0.31
	0.6	1532	657	0.37
	0.8	1323	710	0.40
T2**	0.2	2501	491	0.37
	0.4	2253	586	0.44
	0.6	1977	669	0.51
	0.8	1761	729	0.55
T3	0.2	4373	700	1.49
	0.4	4292	740	1.58
	0.6	4200	787	1.68
	0.8	4047	845	1.80
T4	0.2	4883	761	2.05
	0.4	4781	809	2.18
	0.6	4676	849	2.29
	0.8	4601	886	2.39
T5	0.2	4954	770	2.14
	0.4	4843	821	2.29
	0.6	4732	861	2.40
	0.8	4673	893	2.49
T6	0.2	4373	700	1.49
	0.4	4292	740	1.58
	0.6	4200	787	1.68
	0.8	4047	845	1.80
T7	0.2	4603	727	1.55
	0.4	4519	768	1.64
	0.6	4428	812	1.73
	0.8	4304	863	1.84
T8	0.2	4729	742	1.86
	0.4	4639	785	1.97
	0.6	4544	827	2.07
	0.8	4440	873	2.19
T9	0.2	4883	761	2.05
	0.4	4781	809	2.18
	0.6	4676	849	2.29
	0.8	4601	886	2.39
T10	0.2	4954	770	2.14
	0.4	4843	821	2.29
	0.6	4732	861	2.40
	0.8	4673	893	2.49

Horizontal Flow				
Speed Tap	ESP	CFM	RPM	BHP
T1**	0.2	2124	462	0.26
	0.4	1926	534	0.30
	0.6	1609	625	0.35
	0.8	1383	692	0.39
T2**	0.2	2447	503	0.38
	0.4	2275	570	0.43
	0.6	2010	650	0.49
	0.8	1810	713	0.54
T3	0.2	4258	736	1.57
	0.4	4177	777	1.66
	0.6	4103	816	1.74
	0.8	4012	858	1.83
T4	0.2	4784	805	2.17
	0.4	4697	842	2.27
	0.6	4614	881	2.37
	0.8	4532	920	2.48
T5	0.2	4860	815	2.27
	0.4	4769	851	2.37
	0.6	4681	892	2.48
	0.8	4598	930	2.59
T6	0.2	4258	736	1.57
	0.4	4177	777	1.66
	0.6	4103	816	1.74
	0.8	4012	858	1.83
T7	0.2	4492	766	1.64
	0.4	4411	805	1.72
	0.6	4339	843	1.80
	0.8	4255	884	1.89
T8	0.2	4622	783	1.96
	0.4	4540	821	2.06
	0.6	4465	860	2.15
	0.8	4383	899	2.25
T9	0.2	4784	805	2.17
	0.4	4697	842	2.27
	0.6	4614	881	2.37
	0.8	4532	920	2.48
T10	0.2	4860	815	2.27
	0.4	4769	851	2.37
	0.6	4681	892	2.48
	0.8	4598	930	2.59

Shaded speed tap - Airflow for supplimental heat.
** (T1) and (T2) are part load only

12.5 Ton Cooler • Medium Static Direct Drive • Models: DSC1503L, DSC1504L, DSC1507L

Down Flow				
Speed Tap	ESP	CFM	RPM	BHP
T1**	0.2	2543	483	0.39
	0.4	2344	561	0.45
	0.6	2082	653	0.53
	0.8	1822	727	0.59
	1	1632	773	0.63
	1.2	1380	832	0.67
	1.4	-	-	-
T2**	0.2	2845	517	0.50
	0.4	2659	589	0.57
	0.6	2425	673	0.65
	0.8	2185	743	0.72
	1	2004	790	0.77
	1.2	1758	849	0.83
	1.4	1539	892	0.87
T3	0.2	4522	709	1.46
	0.4	4400	754	1.55
	0.6	4295	799	1.64
	0.8	4158	848	1.74
	1	4026	895	1.84
	1.2	3826	952	1.96
	1.4	3671	996	2.05
T4	0.2	5513	828	2.46
	0.4	5418	863	2.57
	0.6	5346	896	2.66
	0.8	5253	935	2.78
	1	5153	978	2.90
	1.2	5005	1025	3.04
	1.4	4883	1066	3.17
T5	0.2	5616	841	2.60
	0.4	5522	876	2.71
	0.6	5450	909	2.81
	0.8	5359	947	2.93
	1	5263	988	3.06
	1.2	5122	1033	3.20
	1.4	5004	1074	3.32
T6	0.2	4881	751	1.76
	0.4	4769	792	1.86
	0.6	4683	831	1.95
	0.8	4564	876	2.06
	1	4444	922	2.16
	1.2	4258	976	2.29
	1.4	4116	1020	2.39
T7	0.2	5215	791	2.10
	0.4	5113	828	2.20
	0.6	5038	864	2.29
	0.8	4934	905	2.40
	1	4824	950	2.52
	1.2	4656	1001	2.66
	1.4	4525	1044	2.77
T8	0.2	5413	816	2.33
	0.4	5315	851	2.43
	0.6	5244	885	2.53
	0.8	5147	925	2.64
	1	5044	968	2.77
	1.2	4888	1016	2.91
	1.4	4763	1058	3.03
T9	0.2	5513	828	2.46
	0.4	5418	863	2.57
	0.6	5346	896	2.66
	0.8	5253	935	2.78
	1	5153	978	2.90
	1.2	5005	1025	3.04
	1.4	4883	1066	3.17
T10	0.2	5616	841	2.60
	0.4	5522	876	2.71
	0.6	5450	909	2.81
	0.8	5359	947	2.93
	1	5263	988	3.06
	1.2	5122	1033	3.20
	1.4	5004	1074	3.32

Horizontal Flow				
Speed Tap	ESP	CFM	RPM	BHP
T1**	0.2	2460	510	0.41
	0.4	2228	602	0.49
	0.6	1972	687	0.56
	0.8	1804	742	0.60
	1	1610	797	0.64
	1.2	1395	852	0.69
	1.4	1313	904	0.73
T2**	0.2	2748	548	0.53
	0.4	2543	631	0.61
	0.6	2311	709	0.69
	0.8	2155	762	0.74
	1	1963	817	0.79
	1.2	1763	871	0.85
	1.4	1659	924	0.90
T3	0.2	4351	764	1.57
	0.4	4266	804	1.65
	0.6	4152	847	1.74
	0.8	4053	889	1.83
	1	3893	942	1.93
	1.2	3772	986	2.03
	1.4	3591	1039	2.13
T4	0.2	5302	897	2.67
	0.4	5246	924	2.75
	0.6	5177	956	2.84
	0.8	5099	991	2.94
	1	4987	1033	3.07
	1.2	4904	1069	3.18
	1.4	4750	1113	3.31
T5	0.2	5401	912	2.82
	0.4	5343	939	2.90
	0.6	5277	970	3.00
	0.8	5200	1004	3.11
	1	5096	1044	3.23
	1.2	5016	1079	3.34
	1.4	4872	1121	3.47
T6	0.2	4695	811	1.90
	0.4	4626	845	1.98
	0.6	4532	883	2.07
	0.8	4442	922	2.16
	1	4296	972	2.28
	1.2	4189	1014	2.38
	1.4	4008	1065	2.50
T7	0.2	5015	856	2.27
	0.4	4956	885	2.35
	0.6	4878	919	2.44
	0.8	4795	956	2.54
	1	4665	1003	2.66
	1.2	4571	1042	2.76
	1.4	4398	1090	2.89
T8	0.2	5205	883	2.53
	0.4	5149	911	2.60
	0.6	5078	943	2.70
	0.8	4998	978	2.80
	1	4879	1022	2.92
	1.2	4793	1059	3.03
	1.4	4631	1105	3.16
T9	0.2	5302	897	2.67
	0.4	5246	924	2.75
	0.6	5177	956	2.84
	0.8	5099	991	2.94
	1	4987	1033	3.07
	1.2	4904	1069	3.18
	1.4	4750	1113	3.31
T10	0.2	5401	912	2.82
	0.4	5343	939	2.90
	0.6	5277	970	3.00
	0.8	5200	1004	3.11
	1	5096	1044	3.23
	1.2	5016	1079	3.34
	1.4	4872	1121	3.47

Shaded speed tap - Airflow for supplimental heat.
** (T1) and (T2) are part load only

12.5 Ton Cooler • High Static Direct Drive • Models: Models: DSC1503W, DSC1504W, DSC1507W

Down Flow				
Speed Tap	ESP	CFM	RPM	BHP
T1**	0.2	2752	506	0.47
	0.4	2562	580	0.53
	0.6	-	-	-
	0.8	-	-	-
	1	-	-	-
	1.2	-	-	-
	1.4	-	-	-
	1.6	-	-	-
	1.8	-	-	-
T2**	0.2	2983	532	0.56
	0.4	2802	602	0.63
	0.6	2580	682	0.72
	0.8	-	-	-
	1	-	-	-
	1.2	-	-	-
	1.4	-	-	-
	1.6	-	-	-
	1.8	-	-	-
T3	0.2	4898	753	1.78
	0.4	4788	793	1.87
	0.6	4702	832	1.97
	0.8	4584	877	2.07
	1	4464	923	2.18
	1.2	4280	978	2.31
	1.4	4138	1021	2.41
	1.6	3912	1078	2.55
	1.8	3739	1115	2.63
T4	0.2	5749	859	2.81
	0.4	5658	893	2.92
	0.6	5582	926	3.03
	0.8	5494	963	3.15
	1	5402	1003	3.28
	1.2	5273	1045	3.42
	1.4	5158	1085	3.55
	1.6	5003	1130	3.69
	1.8	4866	1160	3.79
T5	0.2	5849	872	2.97
	0.4	5757	906	3.09
	0.6	5677	940	3.21
	0.8	5591	977	3.33
	1	5502	1015	3.46
	1.2	5383	1055	3.60
	1.4	5270	1093	3.73
	1.6	5132	1135	3.87
	1.8	5003	1167	3.98

Horizontal Flow				
Speed Tap	ESP	CFM	RPM	BHP
T1**	0.2	2659	536	0.49
	0.4	-	-	-
	0.6	-	-	-
	0.8	-	-	-
	1	-	-	-
	1.2	-	-	-
	1.4	-	-	-
	1.6	-	-	-
	1.8	-	-	-
T2**	0.2	2879	566	0.59
	0.4	2685	645	0.68
	0.6	-	-	-
	0.8	-	-	-
	1	-	-	-
	1.2	-	-	-
	1.4	-	-	-
	1.6	-	-	-
	1.8	-	-	-
T3	0.2	4712	813	1.92
	0.4	4643	847	2.00
	0.6	4551	885	2.09
	0.8	4461	924	2.18
	1	4315	974	2.30
	1.2	4210	1015	2.40
	1.4	4028	1066	2.52
	1.6	3884	1109	2.62
	1.8	3675	1166	2.75
T4	0.2	5530	931	3.04
	0.4	5468	958	3.13
	0.6	5403	989	3.23
	0.8	5327	1022	3.34
	1	5234	1059	3.46
	1.2	5158	1092	3.57
	1.4	5032	1132	3.70
	1.6	4929	1166	3.81
	1.8	4764	1212	3.96
T5	0.2	5625	946	3.23
	0.4	5559	974	3.32
	0.6	5494	1005	3.43
	0.8	5417	1037	3.54
	1	5335	1072	3.66
	1.2	5261	1103	3.77
	1.4	5151	1140	3.89
	1.6	5055	1173	4.00
	1.8	4907	1216	4.15

12.5 Ton Cooler • High Static Direct Drive • Models: Models: DSC1503W, DSC1504W, DSC1507W

Down Flow				
Speed Tap	ESP	CFM	RPM	BHP
T6	0.2	5162	785	2.04
	0.4	5059	822	2.14
	0.6	4982	858	2.23
	0.8	4876	900	2.34
	1	4765	945	2.46
	1.2	4594	997	2.59
	1.4	4461	1040	2.71
	1.6	4248	1095	2.85
	1.8	4083	1128	2.93
T7	0.2	5459	822	2.39
	0.4	5363	857	2.49
	0.6	5291	890	2.59
	0.8	5196	929	2.70
	1	5094	972	2.83
	1.2	4942	1020	2.97
	1.4	4818	1062	3.09
	1.6	4628	1113	3.24
	1.8	4475	1143	3.33
T8	0.2	5653	846	2.66
	0.4	5560	880	2.77
	0.6	5487	913	2.87
	0.8	5397	951	2.99
	1	5302	992	3.12
	1.2	5164	1037	3.26
	1.4	5046	1077	3.38
	1.6	4878	1125	3.53
	1.8	4734	1154	3.62
T9	0.2	5749	859	2.81
	0.4	5658	893	2.92
	0.6	5582	926	3.03
	0.8	5494	963	3.15
	1	5402	1003	3.28
	1.2	5273	1045	3.42
	1.4	5158	1085	3.55
	1.6	5003	1130	3.69
	1.8	4866	1160	3.79
T10	0.2	5849	872	2.97
	0.4	5757	906	3.09
	0.6	5677	940	3.21
	0.8	5591	977	3.33
	1	5502	1015	3.46
	1.2	5383	1055	3.60
	1.4	5270	1093	3.73
	1.6	5132	1135	3.87
	1.8	5003	1167	3.98

Horizontal Flow				
Speed Tap	ESP	CFM	RPM	BHP
T6	0.2	4965	849	2.21
	0.4	4905	878	2.29
	0.6	4824	913	2.38
	0.8	4740	951	2.47
	1	4607	998	2.60
	1.2	4512	1037	2.70
	1.4	4337	1086	2.83
	1.6	4204	1126	2.93
	1.8	3995	1181	3.07
T7	0.2	5250	890	2.59
	0.4	5194	917	2.67
	0.6	5124	949	2.76
	0.8	5045	984	2.86
	1	4929	1027	2.99
	1.2	4844	1063	3.09
	1.4	4686	1108	3.23
	1.6	4568	1146	3.34
	1.8	4371	1198	3.49
T8	0.2	5436	917	2.88
	0.4	5378	944	2.96
	0.6	5312	975	3.06
	0.8	5235	1008	3.17
	1	5134	1048	3.29
	1.2	5055	1082	3.40
	1.4	4916	1124	3.53
	1.6	4808	1159	3.64
	1.8	4629	1207	3.79
T9	0.2	5530	931	3.04
	0.4	5468	958	3.13
	0.6	5403	989	3.23
	0.8	5327	1022	3.34
	1	5234	1059	3.46
	1.2	5158	1092	3.57
	1.4	5032	1132	3.70
	1.6	4929	1166	3.81
	1.8	4764	1212	3.96
T10	0.2	5625	946	3.23
	0.4	5559	974	3.32
	0.6	5494	1005	3.43
	0.8	5417	1037	3.54
	1	5335	1072	3.66
	1.2	5261	1103	3.77
	1.4	5151	1140	3.89
	1.6	5055	1173	4.00
	1.8	4907	1216	4.15

Shaded speed tap - Airflow for supplimental heat.
** (T1) and (T2) are part load only

7.5 - 8.5 Ton blower Fan Curve

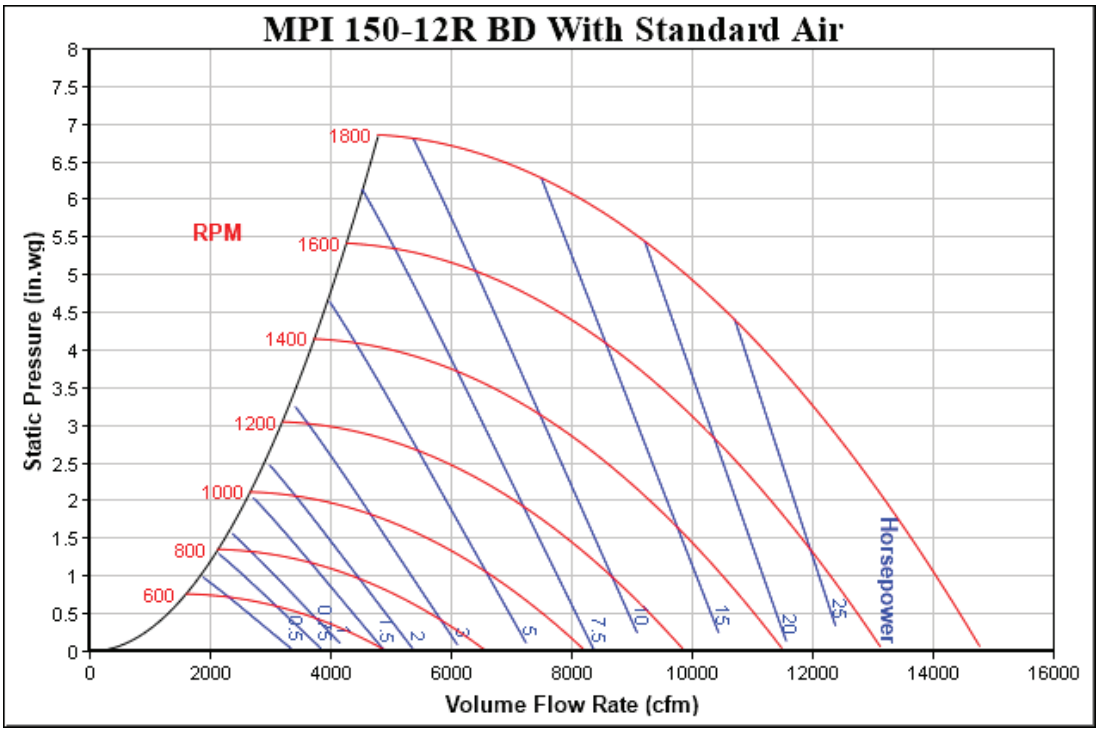

10 - 12.5 Ton blower Fan Curve

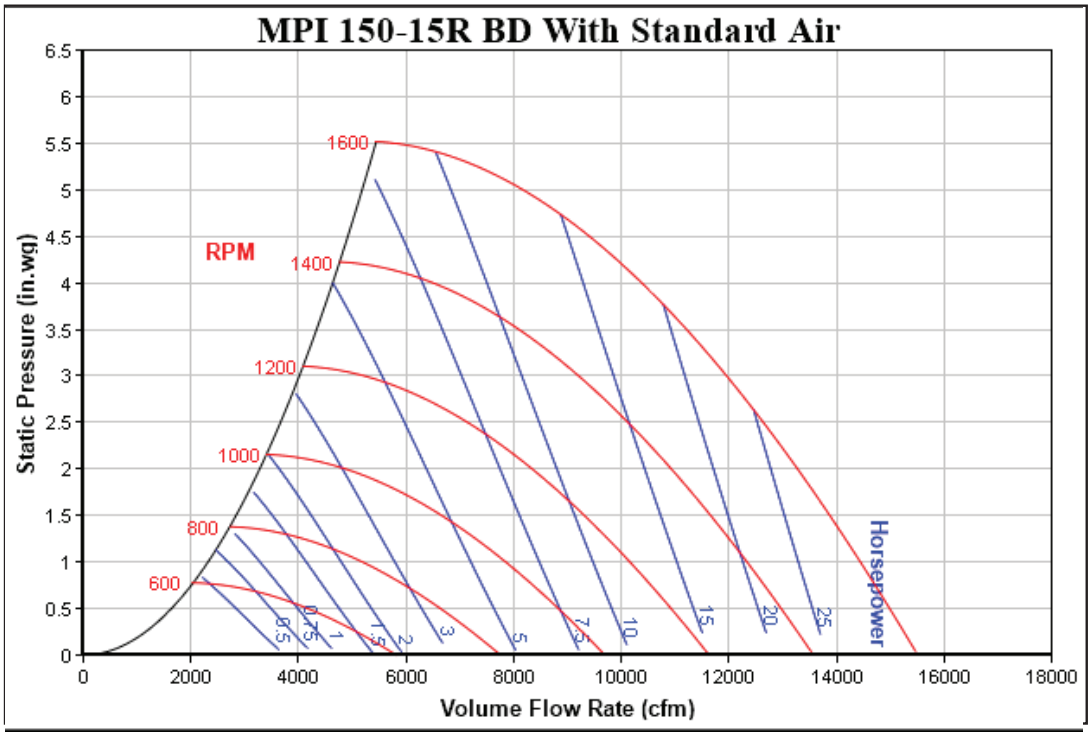

Static Pressure

7.5-12.5 TONS		
DOWNFLOW ECONOMIZER PRESSURE DROP		
Cabinet	CFM	SP in. wg.
7.5 Ton	2250	.04"
	3000	.07"
	3750	.11"
8.5 Ton	2550	.06"
	3400	.10"
	4250	.16"
10 Ton	3000	.08"
	4000	.13"
	5000	.22"
12.5 Ton	3750	.14"
	5000	.24"
	6250	.36"

7.5-12.5 TONS		
HORIZONTAL ECONOMIZER PRESSURE DROP		
Cabinet	CFM	SP in. wg.
7.5 Ton	2250	.05"
	3000	.07"
	3750	.13"
8.5 Ton	2550	.07"
	3400	.13"
	4250	.18"
10 Ton	3000	.07"
	4000	.12"
	5000	.19"
12.5 Ton	3750	.09"
	5000	.15"
	6250	.24"

Electrical Data

Model Number	Electrical Rating	Compressor			Outdoor Fan Motor			Indoor Fan Motor			Optional Electric Heat			Optional Powered Convenience Outlet	Optional Power Exhaust	Power Supply	
		QTY	RLA	LRA	QTY	HP	FLA	TYPE	HP	FLA	PART #	KW*	FLA	FLA	FLA	MCA	MOP
DSC0903D	208/230/3/60	2	12.2	120	2	0.33	2.0	1	2.4	8.0	-	-	-	-	-	39.4/39.4	50/50
											-	-	-	9.6/8.7	-	49.0/48.1	60/60
											-	-	-	-	3.3/3.0 (2.4)	42.7/42.4	50/50
											-	-	-	9.6/8.7	3.3/3.0 (2.4)	52.3/51.1	60/60
											EH*D-3M15	11.3/15.0	31.3/36.1	-	-	49.1/55.1	50/60
														9.6/8.7	-	61.1/66.0	70/70
														-	3.3/3.0 (2.4)	53.2/58.9	60/60
														9.6/8.7	3.3/3.0 (2.4)	65.2/69.7	70/70
											EH*D-3M30	22.5/30.0	62.5/72.2	-	-	88.2/100	90/110
														9.6/8.7	-	100/111	110/125
														-	3.3/3.0 (2.4)	92.3/104	100/110
														9.6/8.7	3.3/3.0 (2.4)	104/115	110/125
											EH*D-3M45	33.8/45.0	93.8/108	-	-	127/145	150/150
														9.6/8.7	-	139/156	150/175
														-	3.3/3.0 (2.4)	131/149	150/150
														9.6/8.7	3.3/3.0 (2.4)	143/160	150/175
DSC0903L	208/230/3/60	2	12.2	120	2	0.33	2.0	1	2.4	8.0	-	-	-	-	-	39.4/39.4	50/50
											-	-	-	9.6/8.7	-	49.0/48.1	60/60
											-	-	-	-	3.3/3.0 (2.4)	42.7/42.4	50/50
											-	-	-	9.6/8.7	3.3/3.0 (2.4)	52.3/51.1	60/60
											EH*D-3M15	11.3/15.0	31.3/36.1	-	-	49.1/55.1	50/60
														9.6/8.7	-	61.1/66.0	70/70
														-	3.3/3.0 (2.4)	53.2/58.9	60/60
														9.6/8.7	3.3/3.0 (2.4)	65.2/69.7	70/70
											EH*D-3M30	22.5/30.0	62.5/72.2	-	-	88.2/100	90/110
														9.6/8.7	-	100/111	110/125
														-	3.3/3.0 (2.4)	92.3/104	100/110
														9.6/8.7	3.3/3.0 (2.4)	104/115	110/125
											EH*D-3M45	33.8/45.0	93.8/108	-	-	127/145	150/150
														9.6/8.7	-	139/156	150/175
														-	3.3/3.0 (2.4)	131/149	150/150
														9.6/8.7	3.3/3.0 (2.4)	143/160	150/175
DSC0903W	208/230/3/60	2	12.2	120	2	0.33	2.0	1	2.4	8.0	-	-	-	-	-	39.4/39.4	50/50
											-	-	-	9.6/8.7	-	49.0/48.1	60/60
											-	-	-	-	3.3/3.0 (2.4)	42.7/42.4	50/50
											-	-	-	9.6/8.7	3.3/3.0 (2.4)	52.3/51.1	60/60
											EH*D-3M15	11.3/15.0	31.3/36.1	-	-	49.1/55.1	50/60
														9.6/8.7	-	61.1/66.0	70/70
														-	3.3/3.0 (2.4)	53.2/58.9	60/60
														9.6/8.7	3.3/3.0 (2.4)	65.2/69.7	70/70
											EH*D-3M30	22.5/30.0	62.5/72.2	-	-	88.2/100	90/110
														9.6/8.7	-	100/111	110/125
														-	3.3/3.0 (2.4)	92.3/104	100/110
														9.6/8.7	3.3/3.0 (2.4)	104/115	110/125
											EH*D-3M45	33.8/45.0	93.8/108	-	-	127/145	150/150
														9.6/8.7	-	139/156	150/175
														-	3.3/3.0 (2.4)	131/149	150/150
														9.6/8.7	3.3/3.0 (2.4)	143/160	150/175
DSC0904D	460/3/60	2	5.8	55.1	2	0.33	0.85	1	2.4	5.4	-	-	-	-	-	20.1	25
											-	-	-	4.3	-	24.4	30
											-	-	-	-	1.2 (1.0)	21.3	25
											-	-	-	4.3	1.2 (1.0)	25.6	30
											EH*D-4M15	15.0	18.0	-	-	29.3	30
														4.3	-	34.7	35
														-	1.2 (1.0)	30.8	35
														4.3	1.2 (1.0)	36.2	40
											EH*D-4M30	30.0	36.1	-	-	51.9	60
														4.3	-	57.2	60
														-	1.2 (1.0)	53.4	60
														4.3	1.2 (1.0)	58.7	60
											EH*D-4M45	45.0	54.1	-	-	74.4	80
														4.3	-	79.8	80
														-	1.2 (1.0)	75.9	80
														4.3	1.2 (1.0)	81.3	90

Electrical Data

Model Number	Electrical Rating	Compressor			Outdoor Fan Motor			Indoor Fan Motor			Optional Electric Heat			Optional Powered Convenience Outlet	Optional Power Exhaust	Power Supply	
		QTY	RLA	LRA	QTY	HP	FLA	TYPE	HP	FLA	PART #	KW*	FLA	FLA	FLA	MCA	MOP
DSC0904L	460/3/60	2	5.8	55.1	2	0.33	0.85	1	2.4	5.4	-	-	-	-	-	20.1	25
											-	-	-	4.3	-	24.4	30
											-	-	-	-	1.2 (1.0)	21.3	25
											-	-	-	4.3	1.2 (1.0)	25.6	30
											EH*D-4M15	15.0	18.0	-	-	29.3	30
														4.3	-	34.7	35
														-	1.2 (1.0)	30.8	35
														4.3	1.2 (1.0)	36.2	40
											EH*D-4M30	30.0	36.1	-	-	51.9	60
														4.3	-	57.2	60
														-	1.2 (1.0)	53.4	60
														4.3	1.2 (1.0)	58.7	60
											EH*D-4M45	45.0	54.1	-	-	74.4	80
														4.3	-	79.8	80
														-	1.2 (1.0)	75.9	80
														4.3	1.2 (1.0)	81.3	90
DSC0904W	460/3/60	2	5.8	55.1	2	0.33	0.85	1	2.4	5.4	-	-	-	-	-	20.1	25
											-	-	-	4.3	-	24.4	30
											-	-	-	-	1.2 (1.0)	21.3	25
											-	-	-	4.3	1.2 (1.0)	25.6	30
											EH*D-4M15	15.0	18.0	-	-	29.3	30
														4.3	-	34.7	35
														-	1.2 (1.0)	30.8	35
														4.3	1.2 (1.0)	36.2	40
											EH*D-4M30	30.0	36.1	-	-	51.9	60
														4.3	-	57.2	60
														-	1.2 (1.0)	53.4	60
														4.3	1.2 (1.0)	58.7	60
											EH*D-4M45	45.0	54.1	-	-	74.4	80
														4.3	-	79.8	80
														-	1.2 (1.0)	75.9	80
														4.3	1.2 (1.0)	81.3	90
DSC0907D	575/3/60	2	5.8	41.0	2	0.33	0.67	1	2.4	4.0	-	-	-	-	-	18.3	20
											-	-	-	3.5	-	21.8	25
											-	-	-	-	1.3	19.6	25
											-	-	-	3.5	1.3	23.1	25
											EH*D-7M15	15.0	14.4	-	-	23.0	25
														3.5	-	27.4	30
														-	1.3	24.7	25
														3.5	1.3	29.0	30
											EH*D-7M30	30.0	28.9	-	-	41.1	45
														3.5	-	45.5	50
														-	1.3	42.7	45
														3.5	1.3	47.1	50
											EH*D-7M45	45.0	43.3	-	-	59.1	60
														3.5	-	63.5	70
														-	1.3	60.8	70
														3.5	1.3	65.1	70
DSC0907L	575/3/60	2	5.8	41.0	2	0.33	0.67	1	2.4	4.0	-	-	-	-	-	18.3	20
											-	-	-	3.5	-	21.8	25
											-	-	-	-	1.3	19.6	25
											-	-	-	3.5	1.3	23.1	25
											EH*D-7M15	15.0	14.4	-	-	23.0	25
														3.5	-	27.4	30
														-	1.3	24.7	25
														3.5	1.3	29.0	30
											EH*D-7M30	30.0	28.9	-	-	41.1	45
														3.5	-	45.5	50
														-	1.3	42.7	45
														3.5	1.3	47.1	50
											EH*D-7M45	45.0	43.3	-	-	59.1	60
														3.5	-	63.5	70
														-	1.3	60.8	70
														3.5	1.3	65.1	70

Electrical Data

Model Number	Electrical Rating	Compressor			Outdoor Fan Motor			Indoor Fan Motor			Optional Electric Heat			Optional Powered Convenience Outlet	Optional Power Exhaust	Power Supply	
		QTY	RLA	LRA	QTY	HP	FLA	TYPE	HP	FLA	PART #	KW*	FLA	FLA	FLA	MCA	MOP
DSC0907W	575/3/60	2	5.8	41.0	2	0.33	0.67	1	2.4	4.0	-	-	-	-	-	18.3	20
											-	-	-	3.5	-	21.8	25
											-	-	-	-	1.3	19.6	25
											-	-	-	3.5	1.3	23.1	25
											EH*D-7M15	15.0	14.4	-	-	23.0	25
														3.5	-	27.4	30
														-	1.3	24.7	25
														3.5	1.3	29.0	30
											EH*D-7M30	30.0	28.9	-	-	41.1	45
														3.5	-	45.5	50
														-	1.3	42.7	45
														3.5	1.3	47.1	50
											EH*D-7M45	45.0	43.3	-	-	59.1	60
														3.5	-	63.5	70
														-	1.3	60.8	70
														3.5	1.3	65.1	70
DSC1023D	208/230/3/60	2	14.1	120	2	0.33	2.0	1	2.4	8.0	-	-	-	-	-	43.7/43.7	50/50
											-	-	-	9.6/8.7	-	53.3/52.4	60/60
											-	-	-	-	3.3/3.0 (2.4)	47.0/46.7	60/60
											-	-	-	9.6/8.7	3.3/3.0 (2.4)	56.6/55.4	60/60
											EH*D-3M15	11.3/15.0	31.3/36.1	-	-	49.1/55.1	50/60
														9.6/8.7	-	61.1/66.0	70/70
														-	3.3/3.0 (2.4)	53.2/58.9	60/60
														9.6/8.7	3.3/3.0 (2.4)	65.2/69.7	70/70
											EH*D-3M30	22.5/30.0	62.5/72.2	-	-	88.2/100	90/110
														9.6/8.7	-	100/111	110/125
														-	3.3/3.0 (2.4)	92.3/104	100/110
														9.6/8.7	3.3/3.0 (2.4)	104/115	110/125
											EH*D-3M45	33.8/45.0	93.8/108	-	-	127/145	150/150
														9.6/8.7	-	139/156	150/175
														-	3.3/3.0 (2.4)	131/149	150/150
														9.6/8.7	3.3/3.0 (2.4)	143/160	150/175
DSC1023L	208/230/3/60	2	14.1	120	2	0.33	2.0	1	2.4	8.0	-	-	-	-	-	43.7/43.7	50/50
											-	-	-	9.6/8.7	-	53.3/52.4	60/60
											-	-	-	-	3.3/3.0 (2.4)	47.0/46.7	60/60
											-	-	-	9.6/8.7	3.3/3.0 (2.4)	56.6/55.4	60/60
											EH*D-3M15	11.3/15.0	31.3/36.1	-	-	49.1/55.1	50/60
														9.6/8.7	-	61.1/66.0	70/70
														-	3.3/3.0 (2.4)	53.2/58.9	60/60
														9.6/8.7	3.3/3.0 (2.4)	65.2/69.7	70/70
											EH*D-3M30	22.5/30.0	62.5/72.2	-	-	88.2/100	90/110
														9.6/8.7	-	100/111	110/125
														-	3.3/3.0 (2.4)	92.3/104	100/110
														9.6/8.7	3.3/3.0 (2.4)	104/115	110/125
											EH*D-3M45	33.8/45.0	93.8/108	-	-	127/145	150/150
														9.6/8.7	-	139/156	150/175
														-	3.3/3.0 (2.4)	131/149	150/150
														9.6/8.7	3.3/3.0 (2.4)	143/160	150/175
DSC1023W	208/230/3/60	2	14.1	120	2	0.33	2.0	1	2.4	8.0	-	-	-	-	-	43.7/43.7	50/50
											-	-	-	9.6/8.7	-	53.3/52.4	60/60
											-	-	-	-	3.3/3.0 (2.4)	47.0/46.7	60/60
											-	-	-	9.6/8.7	3.3/3.0 (2.4)	56.6/55.4	60/60
											EH*D-3M15	11.3/15.0	31.3/36.1	-	-	49.1/55.1	50/60
														9.6/8.7	-	61.1/66.0	70/70
														-	3.3/3.0 (2.4)	53.2/58.9	60/60
														9.6/8.7	3.3/3.0 (2.4)	65.2/69.7	70/70
											EH*D-3M30	22.5/30.0	62.5/72.2	-	-	88.2/100	90/110
														9.6/8.7	-	100/111	110/125
														-	3.3/3.0 (2.4)	92.3/104	100/110
														9.6/8.7	3.3/3.0 (2.4)	104/115	110/125
											EH*D-3M45	33.8/45.0	93.8/108	-	-	127/145	150/150
														9.6/8.7	-	139/156	150/175
														-	3.3/3.0 (2.4)	131/149	150/150
														9.6/8.7	3.3/3.0 (2.4)	143/160	150/175

Electrical Data

Model Number	Electrical Rating	Compressor			Outdoor Fan Motor			Indoor Fan Motor			Optional Electric Heat			Optional Powered Convenience Outlet	Optional Power Exhaust	Power Supply	
		QTY	RLA	LRA	QTY	HP	FLA	TYPE	HP	FLA	PART #	KW*	FLA	FLA	FLA	MCA	MOP
DSC1024D	460/3/60	2	6.4	55.1	2	0.33	0.85	1	2.4	5.4	-	-	-	-	-	21.5	25
											-	-	-	4.3	-	25.8	30
											-	-	-	-	1.2 (1.0)	22.7	25
											-	-	-	4.3	1.2 (1.0)	27.0	30
											EH*D-4M15	15.0	18.0	-	-	29.3	30
														4.3	-	34.7	35
														-	1.2 (1.0)	30.8	35
														4.3	1.2 (1.0)	36.2	40
											EH*D-4M30	30.0	36.1	-	-	51.9	60
														4.3	-	57.2	60
														-	1.2 (1.0)	53.4	60
														4.3	1.2 (1.0)	58.7	60
											EH*D-4M45	45.0	54.1	-	-	74.4	80
														4.3	-	79.8	80
														-	1.2 (1.0)	75.9	80
														4.3	1.2 (1.0)	81.3	90
DSC1024L	460/3/60	2	6.4	55.1	2	0.33	0.85	1	2.4	5.4	-	-	-	-	-	21.5	25
											-	-	-	4.3	-	25.8	30
											-	-	-	-	1.2 (1.0)	22.7	25
											-	-	-	4.3	1.2 (1.0)	27.0	30
											EH*D-4M15	15.0	18.0	-	-	29.3	30
														4.3	-	34.7	35
														-	1.2 (1.0)	30.8	35
														4.3	1.2 (1.0)	36.2	40
											EH*D-4M30	30.0	36.1	-	-	51.9	60
														4.3	-	57.2	60
														-	1.2 (1.0)	53.4	60
														4.3	1.2 (1.0)	58.7	60
											EH*D-4M45	45.0	54.1	-	-	74.4	80
														4.3	-	79.8	80
														-	1.2 (1.0)	75.9	80
														4.3	1.2 (1.0)	81.3	90
DSC1024W	460/3/60	2	6.4	55.1	2	0.33	0.85	1	2.4	5.4	-	-	-	-	-	21.5	25
											-	-	-	4.3	-	25.8	30
											-	-	-	-	1.2 (1.0)	22.7	25
											-	-	-	4.3	1.2 (1.0)	27.0	30
											EH*D-4M15	15.0	18.0	-	-	29.3	30
														4.3	-	34.7	35
														-	1.2 (1.0)	30.8	35
														4.3	1.2 (1.0)	36.2	40
											EH*D-4M30	30.0	36.1	-	-	51.9	60
														4.3	-	57.2	60
														-	1.2 (1.0)	53.4	60
														4.3	1.2 (1.0)	58.7	60
											EH*D-4M45	45.0	54.1	-	-	74.4	80
														4.3	-	79.8	80
														-	1.2 (1.0)	75.9	80
														4.3	1.2 (1.0)	81.3	90
DSC1027D	575/3/60	2	5.1	41.0	2	0.33	0.67	1	2.4	4.0	-	-	-	-	-	16.9	20
											-	-	-	3.5	-	20.4	25
											-	-	-	-	1.3	18.2	20
											-	-	-	3.5	1.3	21.7	25
											EH*D-7M15	15.0	14.4	-	-	23.0	25
														3.5	-	27.4	30
														-	1.3	24.7	25
														3.5	1.3	29.0	30
											EH*D-7M30	30.0	28.9	-	-	41.1	45
														3.5	-	45.5	50
														-	1.3	42.7	45
														3.5	1.3	47.1	50
											EH*D-7M45	45.0	43.3	-	-	59.1	60
														3.5	-	63.5	70
														-	1.3	60.8	70
														3.5	1.3	65.1	70

Electrical Data

Model Number	Electrical Rating	Compressor			Outdoor Fan Motor			Indoor Fan Motor			Optional Electric Heat			Optional Powered Convenience Outlet	Optional Power Exhaust	Power Supply	
		QTY	RLA	LRA	QTY	HP	FLA	TYPE	HP	FLA	PART #	KW*	FLA	FLA	FLA	MCA	MOP
DSC1027L	575/3/60	2	5.1	41.0	2	0.33	0.67	1	2.4	4.0	-	-	-	-	-	16.9	20
											-	-	-	3.5	-	20.4	25
											-	-	-	-	1.3	18.2	20
											-	-	-	3.5	1.3	21.7	25
											EH*D-7M15	15.0	14.4	-	-	23.0	25
														3.5	-	27.4	30
														-	1.3	24.7	25
														3.5	1.3	29.0	30
											EH*D-7M30	30.0	28.9	-	-	41.1	45
														3.5	-	45.5	50
														-	1.3	42.7	45
														3.5	1.3	47.1	50
											EH*D-7M45	45.0	43.3	-	-	59.1	60
														3.5	-	63.5	70
														-	1.3	60.8	70
														3.5	1.3	65.1	70
DSC1027W	575/3/60	2	5.1	41.0	2	0.33	0.67	1	2.4	4.0	-	-	-	-	-	16.9	20
											-	-	-	3.5	-	20.4	25
											-	-	-	-	1.3	18.2	20
											-	-	-	3.5	1.3	21.7	25
											EH*D-7M15	15.0	14.4	-	-	23.0	25
														3.5	-	27.4	30
														-	1.3	24.7	25
														3.5	1.3	29.0	30
											EH*D-7M30	30.0	28.9	-	-	41.1	45
														3.5	-	45.5	50
														-	1.3	42.7	45
														3.5	1.3	47.1	50
											EH*D-7M45	45.0	43.3	-	-	59.1	60
														3.5	-	63.5	70
														-	1.3	60.8	70
														3.5	1.3	65.1	70
DSC1203D	208/230/3/60	2	17.3	155	2	0.33	2.0	1	2.4	8.0	-	-	-	-	-	50.9/50.9	60/60
											-	-	-	9.6/8.7	-	60.5/59.6	70/70
											-	-	-	-	3.3/3.0 (2.4)	54.2/53.9	70/70
											-	-	-	9.6/8.7	3.3/3.0 (2.4)	63.8/62.6	80/70
											EH*D-3M15	11.3/15.0	31.3/36.1	-	-	50.9/55.1	60/60
														9.6/8.7	-	61.1/66.0	70/70
														-	3.3/3.0 (2.4)	54.2/58.9	70/70
														9.6/8.7	3.3/3.0 (2.4)	65.2/69.7	80/70
											EH*D-3M30	22.5/30.0	62.5/72.2	-	-	88.2/100	90/110
														9.6/8.7	-	100/111	110/125
														-	3.3/3.0 (2.4)	92.3/104	100/110
														9.6/8.7	3.3/3.0 (2.4)	104/115	110/125
											EH*D-3M45	33.8/45.0	93.8/108	-	-	127/145	150/150
														9.6/8.7	-	139/156	150/175
														-	3.3/3.0 (2.4)	131/149	150/150
														9.6/8.7	3.3/3.0 (2.4)	143/160	150/175
DSC1203L	208/230/3/60	2	17.3	155	2	0.33	2.0	1	3.5	10.9	-	-	-	-	-	53.8/53.8	70/70
											-	-	-	9.6/8.7	-	63.4/62.5	80/70
											-	-	-	-	3.3/3.0 (2.4)	57.1/56.8	70/70
											-	-	-	9.6/8.7	3.3/3.0 (2.4)	66.7/65.5	80/80
											EH*D-3M15	11.3/15.0	31.3/36.1	-	-	53.8/58.7	70/70
														9.6/8.7	-	64.7/69.6	80/70
														-	3.3/3.0 (2.4)	57.1/62.5	70/70
														9.6/8.7	3.3/3.0 (2.4)	68.9/73.4	80/80
											EH*D-3M30	22.5/30.0	62.5/72.2	-	-	91.8/104	100/110
														9.6/8.7	-	104/115	110/125
														-	3.3/3.0 (2.4)	96.0/108	100/110
														9.6/8.7	3.3/3.0 (2.4)	108/118	110/125
											EH*D-3M45	33.8/45.0	93.8/108	-	-	131/149	150/150
														9.6/8.7	-	143/160	150/175
														-	3.3/3.0 (2.4)	135/153	150/175
														9.6/8.7	3.3/3.0 (2.4)	147/164	150/175

Electrical Data

Model Number	Electrical Rating	Compressor			Outdoor Fan Motor			Indoor Fan Motor			Optional Electric Heat			Optional Powered Convenience Outlet	Optional Power Exhaust	Power Supply	
		QTY	RLA	LRA	QTY	HP	FLA	TYPE	HP	FLA	PART #	KW*	FLA	FLA	FLA	MCA	MOP
DSC1203W	208/230/3/60	2	17.3	155	2	0.33	2.0	1	3.5	10.9	-	-	-	-	-	53.8/53.8	70/70
											-	-	-	9.6/8.7	-	63.4/62.5	80/70
											-	-	-	-	3.3/3.0 (2.4)	57.1/56.8	70/70
											-	-	-	9.6/8.7	3.3/3.0 (2.4)	66.7/65.5	80/80
											EH*D-3M15	11.3/15.0	31.3/36.1	-	-	53.8/58.7	70/70
														9.6/8.7	-	64.7/69.6	80/70
														-	3.3/3.0 (2.4)	57.1/62.5	70/70
														9.6/8.7	3.3/3.0 (2.4)	68.9/73.4	80/80
											EH*D-3M30	22.5/30.0	62.5/72.2	-	-	91.8/104	100/110
														9.6/8.7	-	104/115	110/125
														-	3.3/3.0 (2.4)	96.0/108	100/110
														9.6/8.7	3.3/3.0 (2.4)	108/118	110/125
											EH*D-3M45	33.8/45.0	93.8/108	-	-	131/149	150/150
														9.6/8.7	-	143/160	150/175
														-	3.3/3.0 (2.4)	135/153	150/175
														9.6/8.7	3.3/3.0 (2.4)	147/164	150/175
DSC1204D	460/3/60	2	7.7	58.1	2	0.33	0.85	1	2.4	5.4	-	-	-	-	-	24.4	30
											-	-	-	4.3	-	28.7	35
											-	-	-	-	1.2 (1.0)	25.6	30
											-	-	-	4.3	1.2 (1.0)	29.9	35
											EH*D-4M15	15.0	18.0	-	-	29.3	30
														4.3	-	34.7	35
														-	1.2 (1.0)	30.8	35
														4.3	1.2 (1.0)	36.2	40
											EH*D-4M30	30.0	36.1	-	-	51.9	60
														4.3	-	57.2	60
														-	1.2 (1.0)	53.4	60
														4.3	1.2 (1.0)	58.7	60
											EH*D-4M45	45.0	54.1	-	-	74.4	80
														4.3	-	79.8	80
														-	1.2 (1.0)	75.9	80
														4.3	1.2 (1.0)	81.3	90
DSC1204L	460/3/60	2	7.7	58.1	2	0.33	0.85	1	3.5	7.2	-	-	-	-	-	26.2	30
											-	-	-	4.3	-	30.5	35
											-	-	-	-	1.2 (1.0)	27.4	30
											-	-	-	4.3	1.2 (1.0)	31.7	35
											EH*D-4M15	15.0	18.0	-	-	31.6	35
														4.3	-	36.9	40
														-	1.2 (1.0)	33.1	35
														4.3	1.2 (1.0)	38.4	40
											EH*D-4M30	30.0	36.1	-	-	54.1	60
														4.3	-	59.5	60
														-	1.2 (1.0)	55.6	60
														4.3	1.2 (1.0)	61.0	70
											EH*D-4M45	45.0	54.1	-	-	76.7	80
														4.3	-	82.0	90
														-	1.2 (1.0)	78.2	80
														4.3	1.2 (1.0)	83.5	90
DSC1204W	460/3/60	2	7.7	58.1	2	0.33	0.85	1	3.5	7.2	-	-	-	-	-	26.2	30
											-	-	-	4.3	-	30.5	35
											-	-	-	-	1.2 (1.0)	27.4	30
											-	-	-	4.3	1.2 (1.0)	31.7	35
											EH*D-4M15	15.0	18.0	-	-	31.6	35
														4.3	-	36.9	40
														-	1.2 (1.0)	33.1	35
														4.3	1.2 (1.0)	38.4	40
											EH*D-4M30	30.0	36.1	-	-	54.1	60
														4.3	-	59.5	60
														-	1.2 (1.0)	55.6	60
														4.3	1.2 (1.0)	61.0	70
											EH*D-4M45	45.0	54.1	-	-	76.7	80
														4.3	-	82.0	90
														-	1.2 (1.0)	78.2	80
														4.3	1.2 (1.0)	83.5	90

Electrical Data

Model Number	Electrical Rating	Compressor			Outdoor Fan Motor			Indoor Fan Motor			Optional Electric Heat			Optional Powered Convenience Outlet	Optional Power Exhaust	Power Supply	
		QTY	RLA	LRA	QTY	HP	FLA	TYPE	HP	FLA	PART #	KW*	FLA	FLA	FLA	MCA	MOP
DSC1207D	575/3/60	2	7.0	47.8	2	0.33	0.67	1	2.4	4.0	-	-	-	-	-	21.2	25
											-	-	-	3.5	-	24.7	30
											-	-	-	-	1.3	22.5	25
											-	-	-	3.5	1.3	26.0	30
											EH*D-7M15	15.0	14.4	-	-	23.0	25
														3.5	-	27.4	30
														-	1.3	24.7	25
														3.5	1.3	29.0	30
											EH*D-7M30	30.0	28.9	-	-	41.1	45
														3.5	-	45.5	50
														-	1.3	42.7	45
														3.5	1.3	47.1	50
											EH*D-7M45	45.0	43.3	-	-	59.1	60
														3.5	-	63.5	70
														-	1.3	60.8	70
														3.5	1.3	65.1	70
DSC1207L	575/3/60	2	7.0	47.8	2	0.33	0.67	1	3.5	5.0	-	-	-	-	-	22.2	25
											-	-	-	3.5	-	25.7	30
											-	-	-	-	1.3	23.5	30
											-	-	-	3.5	1.3	27.0	30
											EH*D-7M15	15.0	14.4	-	-	24.3	25
														3.5	-	28.7	30
														-	1.3	25.9	30
														3.5	1.3	30.3	35
											EH*D-7M30	30.0	28.9	-	-	42.3	45
														3.5	-	46.7	50
														-	1.3	44.0	45
														3.5	1.3	48.3	50
											EH*D-7M45	45.0	43.3	-	-	60.4	70
														3.5	-	64.8	70
														-	1.3	62.0	70
														3.5	1.3	66.4	70
DSC1207W	575/3/60	2	7.0	47.8	2	0.33	0.67	1	3.5	5.0	-	-	-	-	-	22.2	25
											-	-	-	3.5	-	25.7	30
											-	-	-	-	1.3	23.5	30
											-	-	-	3.5	1.3	27.0	30
											EH*D-7M15	15.0	14.4	-	-	24.3	25
														3.5	-	28.7	30
														-	1.3	25.9	30
														3.5	1.3	30.3	35
											EH*D-7M30	30.0	28.9	-	-	42.3	45
														3.5	-	46.7	50
														-	1.3	44.0	45
														3.5	1.3	48.3	50
											EH*D-7M45	45.0	43.3	-	-	60.4	70
														3.5	-	64.8	70
														-	1.3	62.0	70
														3.5	1.3	66.4	70
DSC1503D	208/230/3/60	2	19.2	157	2	0.5	2.7	1	3.5	10.9	-	-	-	-	-	59.5/59.5	70/70
											-	-	-	9.6/8.7	-	69.1/68.2	80/80
											-	-	-	-	3.3/3.0 (2.4)	62.8/62.5	80/80
											-	-	-	9.6/8.7	3.3/3.0 (2.4)	72.4/71.2	90/80
											EH*D-3M15	11.3/15.0	31.3/36.1	-	-	59.5/59.5	70/70
														9.6/8.7	-	69.1/69.6	80/80
														-	3.3/3.0 (2.4)	62.8/62.5	80/80
														9.6/8.7	3.3/3.0 (2.4)	72.4/73.4	90/80
											EH*D-3M30	22.5/30.0	62.5/72.2	-	-	91.8/104	100/110
														9.6/8.7	-	104/115	110/125
														-	3.3/3.0 (2.4)	96.0/108	100/110
														9.6/8.7	3.3/3.0 (2.4)	108/118	110/125
											EH*D-3M45	33.8/45.0	93.8/108	-	-	131/149	150/150
														9.6/8.7	-	143/160	150/175
														-	3.3/3.0 (2.4)	135/153	150/175
														9.6/8.7	3.3/3.0 (2.4)	147/164	150/175

Electrical Data

Model Number	Electrical Rating	Compressor			Outdoor Fan Motor			Indoor Fan Motor			Optional Electric Heat			Optional Powered Convenience Outlet	Optional Power Exhaust	Power Supply	
		QTY	RLA	LRA	QTY	HP	FLA	TYPE	HP	FLA	PART #	KW*	FLA	FLA	FLA	MCA	MOP
DSC1503L	208/230/3/60	2	19.2	157	2	0.5	2.7	1	5.0	14.5	-	-	-	-	-	63.1/63.1	80/80
											-	-	-	9.6/8.7	-	72.7/71.8	90/90
											-	-	-	-	3.3/3.0 (2.4)	66.4/66.1	80/80
											-	-	-	9.6/8.7	3.3/3.0 (2.4)	76.0/74.8	90/90
											EH*D-3M15	11.3/15.0	31.3/36.1	-	-	63.1/63.2	80/80
														9.6/8.7	-	72.7/74.1	90/90
														-	3.3/3.0 (2.4)	66.4/67.0	80/80
														9.6/8.7	3.3/3.0 (2.4)	76.0/77.9	90/90
											EH*D-3M30	22.5/30.0	62.5/72.2	-	-	96.3/108	100/110
														9.6/8.7	-	108/119	110/125
														-	3.3/3.0 (2.4)	100/112	110/125
														9.6/8.7	3.3/3.0 (2.4)	112/123	125/125
											EH*D-3M45	33.8/45.0	93.8/108	-	-	135/153	150/175
														9.6/8.7	-	147/164	150/175
														-	3.3/3.0 (2.4)	140/157	150/175
														9.6/8.7	3.3/3.0 (2.4)	152/168	175/175
DSC1503W	208/230/3/60	2	19.2	157	2	0.5	2.7	1	5.0	14.5	-	-	-	-	-	63.1/63.1	80/80
											-	-	-	9.6/8.7	-	72.7/71.8	90/90
											-	-	-	-	3.3/3.0 (2.4)	66.4/66.1	80/80
											-	-	-	9.6/8.7	3.3/3.0 (2.4)	76.0/74.8	90/90
											EH*D-3M15	11.3/15.0	31.3/36.1	-	-	63.1/63.2	80/80
														9.6/8.7	-	72.7/74.1	90/90
														-	3.3/3.0 (2.4)	66.4/67.0	80/80
														9.6/8.7	3.3/3.0 (2.4)	76.0/77.9	90/90
											EH*D-3M30	22.5/30.0	62.5/72.2	-	-	96.3/108	100/110
														9.6/8.7	-	108/119	110/125
														-	3.3/3.0 (2.4)	100/112	110/125
														9.6/8.7	3.3/3.0 (2.4)	112/123	125/125
											EH*D-3M45	33.8/45.0	93.8/108	-	-	135/153	150/175
														9.6/8.7	-	147/164	150/175
														-	3.3/3.0 (2.4)	140/157	150/175
														9.6/8.7	3.3/3.0 (2.4)	152/168	175/175
DSC1504D	460/3/60	2	9.0	74.8	2	0.5	1.4	1	3.5	7.2	-	-	-	-	-	30.2	35
											-	-	-	4.3	-	34.5	40
											-	-	-	-	1.2 (1.0)	31.4	40
											-	-	-	4.3	1.2 (1.0)	35.7	40
											EH*D-4M15	15.0	18.0	-	-	31.6	35
														4.3	-	36.9	40
														-	1.2 (1.0)	33.1	40
														4.3	1.2 (1.0)	38.4	40
											EH*D-4M30	30.0	36.1	-	-	54.1	60
														4.3	-	59.5	60
														-	1.2 (1.0)	55.6	60
														4.3	1.2 (1.0)	61.0	70
											EH*D-4M45	45.0	54.1	-	-	76.7	80
														4.3	-	82.0	90
														-	1.2 (1.0)	78.2	80
														4.3	1.2 (1.0)	83.5	90
DSC1504L	460/3/60	2	9.0	74.8	2	0.5	1.4	1	5.0	10.6	-	-	-	-	-	33.6	40
											-	-	-	4.3	-	37.9	45
											-	-	-	-	1.2 (1.0)	34.8	45
											-	-	-	4.3	1.2 (1.0)	39.1	45
											EH*D-4M15	15.0	18.0	-	-	35.8	40
														4.3	-	41.2	45
														-	1.2 (1.0)	37.3	45
														4.3	1.2 (1.0)	42.7	45
											EH*D-4M30	30.0	36.1	-	-	58.4	60
														4.3	-	63.7	70
														-	1.2 (1.0)	59.9	60
														4.3	1.2 (1.0)	65.2	70
											EH*D-4M45	45.0	54.1	-	-	80.9	90
														4.3	-	86.3	90
														-	1.2 (1.0)	82.4	90
														4.3	1.2 (1.0)	87.8	90

Electrical Data

Model Number	Electrical Rating	Compressor			Outdoor Fan Motor			Indoor Fan Motor			Optional Electric Heat			Optional Powered Convenience Outlet	Optional Power Exhaust	Power Supply	
		QTY	RLA	LRA	QTY	HP	FLA	TYPE	HP	FLA	PART #	KW*	FLA	FLA	FLA	MCA	MOP
DSC1504W	460/3/60	2	9.0	74.8	2	0.5	1.4	1	5.0	10.6	-	-	-	-	-	33.6	40
											-	-	-	4.3	-	37.9	45
											-	-	-	-	1.2 (1.0)	34.8	45
											-	-	-	4.3	1.2 (1.0)	39.1	45
											EH*D-4M15	15.0	18.0	-	-	35.8	40
														4.3	-	41.2	45
														-	1.2 (1.0)	37.3	45
														4.3	1.2 (1.0)	42.7	45
											EH*D-4M30	30.0	36.1	-	-	58.4	60
														4.3	-	63.7	70
														-	1.2 (1.0)	59.9	60
														4.3	1.2 (1.0)	65.2	70
											EH*D-4M45	45.0	54.1	-	-	80.9	90
														4.3	-	86.3	90
														-	1.2 (1.0)	82.4	90
														4.3	1.2 (1.0)	87.8	90
DSC1507D	575/3/60	2	7.0	53.9	2	0.5	1.0	1	3.5	5.0	-	-	-	-	-	22.8	25
											-	-	-	3.5	-	26.3	30
											-	-	-	-	1.3	24.1	30
											-	-	-	3.5	1.3	27.6	30
											EH*D-7M15	15.0	14.4	-	-	24.3	25
														3.5	-	28.7	30
														-	1.3	25.9	30
														3.5	1.3	30.3	35
											EH*D-7M30	30.0	28.9	-	-	42.3	45
														3.5	-	46.7	50
														-	1.3	44.0	45
														3.5	1.3	48.3	50
											EH*D-7M45	45.0	43.3	-	-	60.4	70
														3.5	-	64.8	70
														-	1.3	62.0	70
														3.5	1.3	66.4	70
DSC1507L	575/3/60	2	7.0	53.9	2	0.5	1.0	1	5.0	7.2	-	-	-	-	-	25.0	30
											-	-	-	3.5	-	28.5	35
											-	-	-	-	1.3	26.3	30
											-	-	-	3.5	1.3	29.8	35
											EH*D-7M15	15.0	14.4	-	-	27.0	30
														3.5	-	31.4	35
														-	1.3	28.7	30
														3.5	1.3	33.0	35
											EH*D-7M30	30.0	28.9	-	-	45.1	50
														3.5	-	49.5	50
														-	1.3	46.7	50
														3.5	1.3	51.1	60
											EH*D-7M45	45.0	43.3	-	-	63.1	70
														3.5	-	67.5	70
														-	1.3	64.8	70
														3.5	1.3	69.1	70
DSC1507W	575/3/60	2	7.0	53.9	2	0.5	1.0	1	5.0	7.2	-	-	-	-	-	25.0	30
											-	-	-	3.5	-	28.5	35
											-	-	-	-	1.3	26.3	30
											-	-	-	3.5	1.3	29.8	35
											EH*D-7M15	15.0	14.4	-	-	27.0	30
														3.5	-	31.4	35
														-	1.3	28.7	30
														3.5	1.3	33.0	35
											EH*D-7M30	30.0	28.9	-	-	45.1	50
														3.5	-	49.5	50
														-	1.3	46.7	50
														3.5	1.3	51.1	60
											EH*D-7M45	45.0	43.3	-	-	63.1	70
														3.5	-	67.5	70
														-	1.3	64.8	70
														3.5	1.3	69.1	70

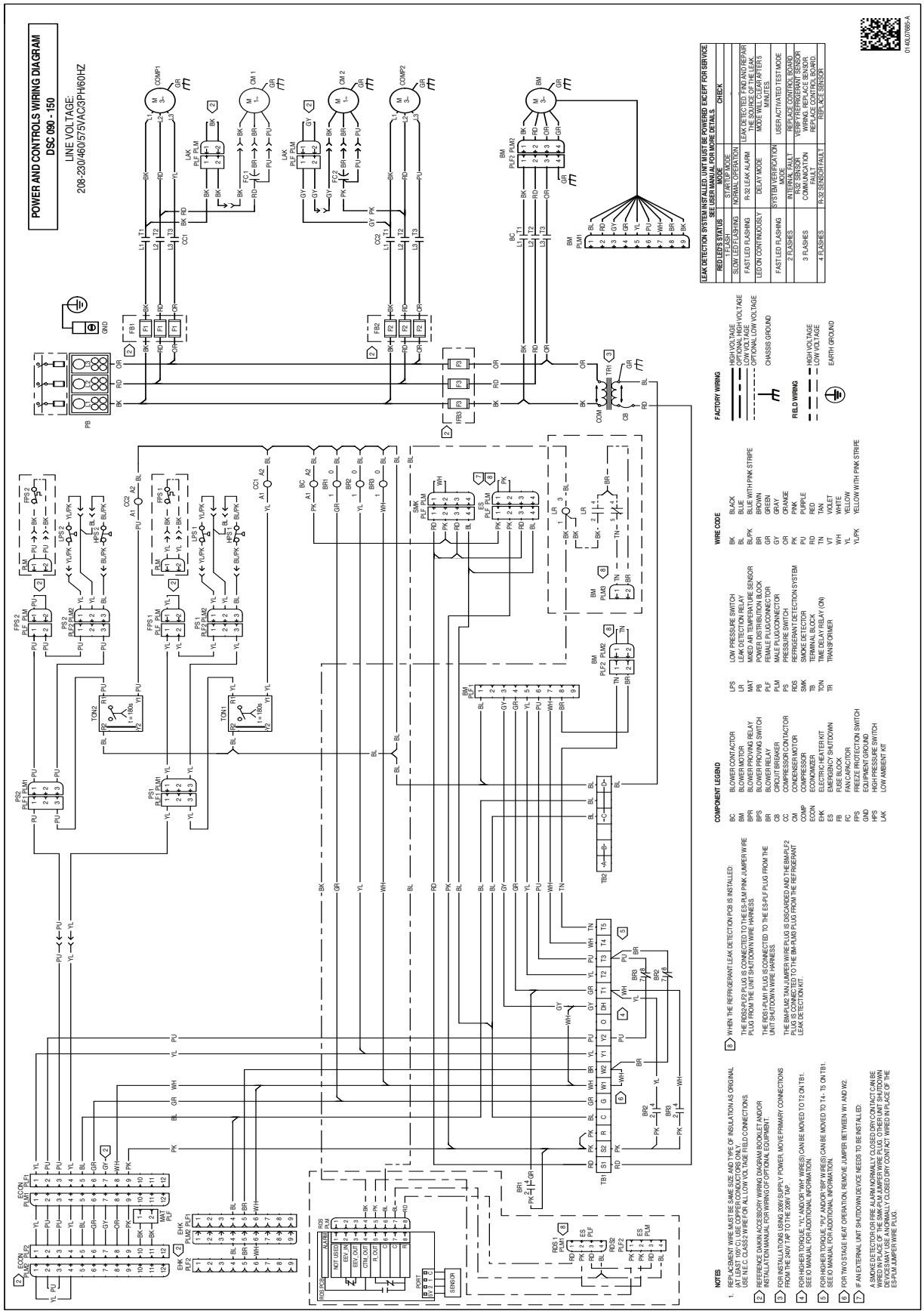

WARNING

High Voltage: Disconnect all power before servicing or installing this unit. Multiple power sources may be present. Failure to do so may cause property damage, personal injury, or death.

Wiring is subject to change. Always refer to the wiring diagram on the unit for the most up-to-date wiring.

Electrical Connections

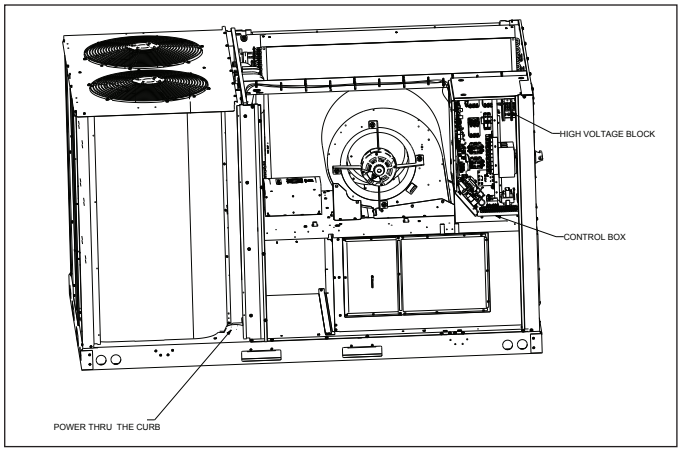

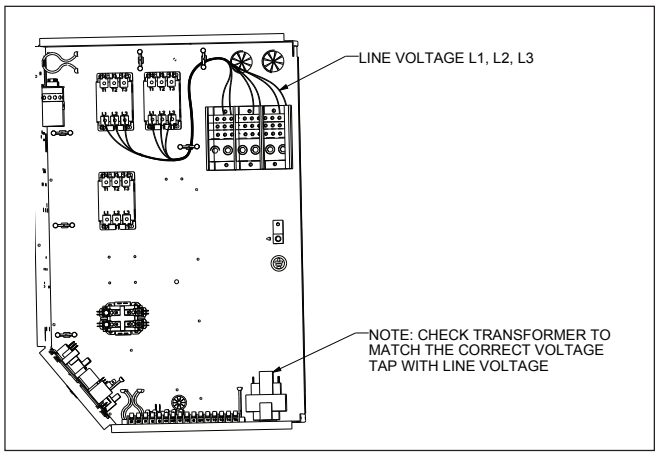

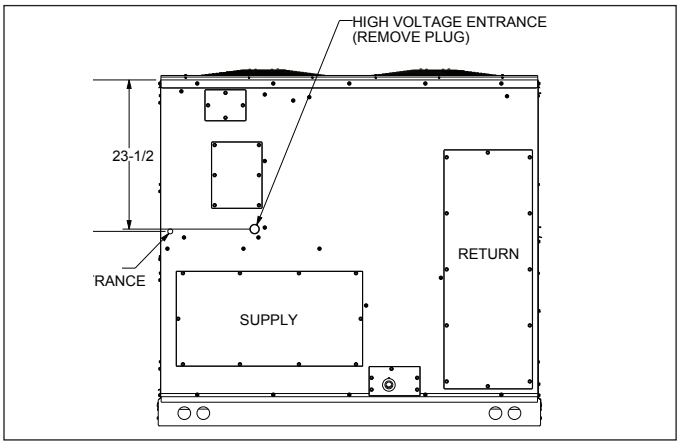

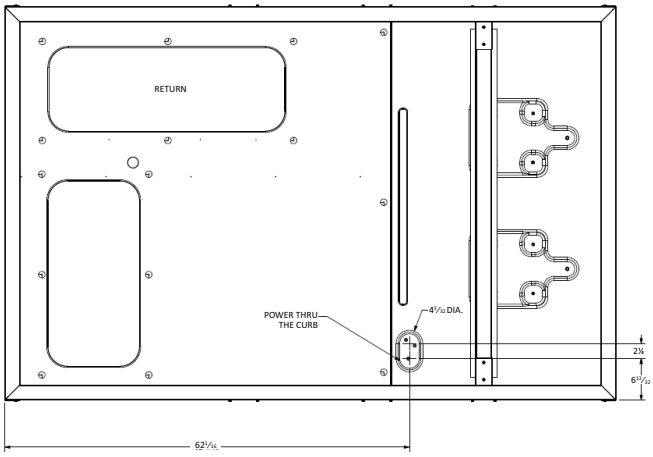

Unit Clearances

Service Clearance

Allow for recommended service clearances as shown in figure to the right. In situations that have multiple units, a 48" minimum clearance is required between the condenser coils. A clearance of 48" is recommended on all sides of the unit to allow service access and to ensure proper ventilation and condenser airflow. The top of the unit should be unobstructed. Provide a roof walkway along the sides of the unit for service and access to controls and components. Contact your Daikin sales representative for service requirements less than those recommended.

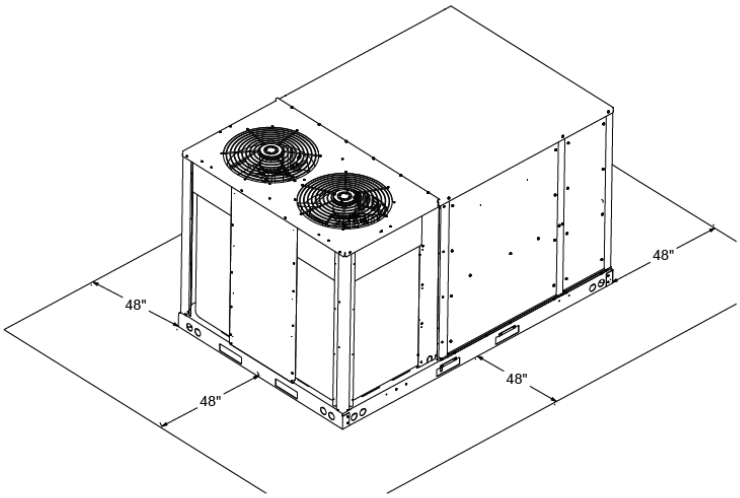

UNIT CLEARANCES

Unit Location

The structural engineer must verify that the roof has adequate support and ability to minimize deflection. Take extreme caution when using on a wooden roof structure. Unit condenser coils should be in a location that avoids any heated exhaust air.

Allow sufficient space around the unit for maintenance/service clearance. Consult your Daikin sales representative if available clearances do not meet minimum recommendations.

Where code considerations, such as the NEC, require extended clearances, these take precedence.

Provisions for forks have been included in the unit base frame. No other fork locations are approved.

» Unit must be lifted by the four lifting holes located at the base frame corners.

» Lifting cables should be attached to the unit with shackles.

» The distance between the crane hook and the top of the unit must not be less than 60".

» Two spreader bars must span over the unit to prevent damage to the cabinet by the lift cables. Spreader bars must be of sufficient length so that cables do not come in contact with the unit during transport. Remove wood struts mounted beneath unit base frame before setting unit on roof curb. These struts are intended to protect unit base frame from forklift damage. To remove the struts, extract the sheet metal retainers and pull the struts through the base of the unit. Refer to rigging label on the unit.

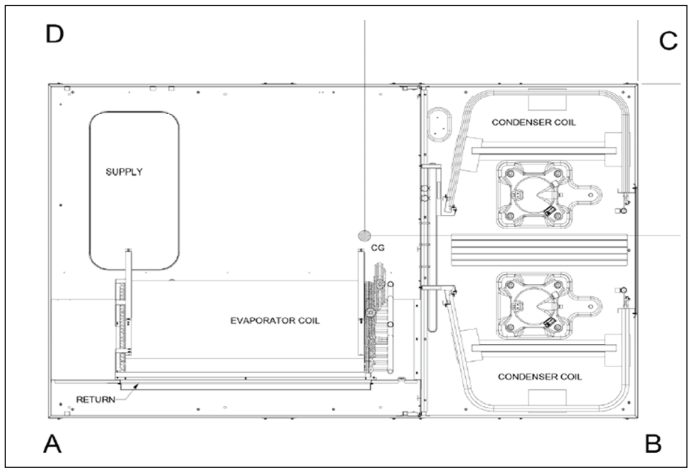

Corner & Center-of-Gravity Locations

Important: If using bottom discharge with roof curb, ductwork should be attached to the curb prior to installing the unit. Refer to the Roof Curb Installation Instructions for proper curb installation. Curbing must be installed in compliance with the National Roofing Contractors Association Manual. Lower unit carefully onto roof mounting curb. While rigging the unit, the center of gravity will cause the condenser end to be lower than the supply air end. Bring condenser end of unit into alignment with the curb. With condenser end of the unit resting on curb member and using curb as a fulcrum, lower opposite end of the unit until entire unit is seated on the curb. When a rectangular cantilever curb is used, take care to center the unit. Check for proper alignment and orientation of supply and return openings with duct.

Roof Curb Installation

The roof curb is field-assembled and must be installed level (within 1/16" per foot side to side). A sub-base must be constructed by the contractor in applications involving pitched roofs. Gaskets are furnished and must be installed between the unit and curb. For proper installation, follow NRCA guidelines. In applications requiring post and rail installation, an I-beam securely mounted on multiple posts should support the unit on each side. In addition, the insulation on the underside of the unit should be protected from the elements. Applications in geographic areas subjected to seismic or hurricane conditions must meet code requirements for fastening the unit to the curb and the curb to the building structure. For further and more detailed information please refer to our Daikin Light Commercial Packaged unit IOD.

Weights

Model	Shipping Weight (lbs)	Operating Weight (lbs)	Corner Weights (lbs)				Length	Width
			A	B	C	D	X (in)	Y (in)
DSC0903D	1087	1015	243	226	274	272	$30\frac{3}{5}$	$42\frac{7}{10}$
DSC1023D	1099	1027	363	142	202	320	$30\frac{3}{5}$	$42\frac{7}{10}$
DSC1203D	1142	1070	229	280	235	326	$30\frac{3}{5}$	$42\frac{7}{10}$
DSC1503D	1225	1153	231	306	274	341	$30\frac{3}{5}$	$42\frac{7}{10}$

For details on accessories refer to document **PM-LC-ACCESSORIES**

Notes

Notes

Our continuing commitment to quality products may mean a change in specifications without notice.
©2024 **DAIKIN COMFORT TECHNOLOGIES MANUFACTURING, L.P.** • Houston, Texas • Printed in the USA.