DAIKIN
AIR INTELLIGENCE

DRG Commercial

High-Efficiency Gas/Electric Packaged Rooftop Unit DRG Commercial 7.5 - 12.5 Nominal Tons

Up to 17 IEER / 12.2 EER

20 YEAR HEAT EXCHANGER LIMITED WARRANTY*

5 YEAR PARTS LIMITED WARRANTY*

Intertek

AHRI CERTIFIED

ISO 9001

ISO 14001 CERTIFIED ENVIRONMENTAL MANAGEMENT SYSTEM

*Complete warranty details available from your local distributor or manufacturer's representative or at www.daikincomfort.com or www.daikinac.com

Our Perfect Package:

Harnessing energy-efficient performance, proven technology, and enhanced comfort for life.

Since becoming the first company in Japan to manufacture packaged air conditioning systems, in 1951, Daikin has supported comfortable indoor living based on the strengths and technologies that have led to the growth of the company becoming one of the world's largest manufacturers of HVAC products, systems and refrigerants.

Today, as a comprehensive global manufacturer of HVAC products and systems, the Daikin brand is committed to being recognized as a truly global and excellent company capable of continually creating new value for its customers. The company plans to pursue sustainable growth and foster business operations that consistently harmonize with the goals of improving indoor comfort.

The group philosophy of the company includes:

- Creating new value continuously for customers
- Developing world leading energy-saving technology
- Being a flexible and dynamic organization
- Allowing employees to be the driving force for the success of the company
- Fostering an atmosphere of best practices, boldness, and innovation
- Thinking and acting globally

Contents

2	Introduction	2
4	Nomenclature	4
5	Features and Benefits	5
	Applications	8
	Serviceability	8
9	Product Specifications	9
	Coil Dimension	27
	AHRI Ratings	27
	Sound Data	27
28	Expanding Cooling Data	28
36	Heating Data	36
37	Air Flow	37
85	DDC Airflow	85
100	Static Pressure	100
101	HGRH Performance	101
105	Electrical Data	105
108	Wiring Diagrams	108
112	Dimensional Data	112
113	Electrical Connections	113
	Unit Clearances	113
114	Installation	114
	Weights	114
115	Accessories	115
119	Factory Installed Options	119
119	Field Installed Options	119
120	Factory and Field Installed Options	116

Nomenclature

D	R	G	120	3	D	130	C	A	A	X	X	X	X	X	X	X	X	A	*
1	2	3	4,5,6	7	8	9,10,11	12	13	14	15	16	17	18	19	20	21	22	23	24

Revision Levels
Major & Minor

Brand
D Daikin

Configuration
R High Efficiency

Application
C Cooling
G Gas Heat
H Heat Pump

Nominal Cooling Capacity
090 7½ Tons
102 8½ Tons
120 10 Tons
150 12½ tons

Voltage
3 208-230/3/60
4 460/3/60
7 575/3/60

Supply Fan/Drive Type/Motor
D Direct Drive-Standard Static
L Direct Drive -Medium Static
W Direct Drive -High Static

Nominal Heating Capacity

Gas/Electric	A/C H/P Factory-Installed Electric Heat	
130 130,000 BTU/h	XXX	No Heat
180 180,000 BTU/h	010	10 kW
225 225,000 BTU/h	015	15 kW
240 240,000 BTU/h	020	20 kW
	030	30 kW
	045	45 kW
	060	60 kW

See product specifications for heat size(s) available for each capacity.

Refrigeration Systems
C Two-stage cooling modes
F Two stage cooling modes with Hot Gas Reheat and Low-ambient control

Heat Exchanger
X No options
A Standard Aluminized Exchanger
S Stainless Steel Exchanger

Controls
A Electro-mechanical controls
B DDC w/ BACnet™ interface

Sensors
X No Options
A RA Smoke Detector
B SA Smoke Detector
C RA & SA Smoke Detector

Hail guard
X No Options
C Hail Guard

Economizer
X No Options
A Ultra Low-Leak Downflow Economizer w/ Enthalpy Sensor
B Low-Leak Downflow Economizer w/ Enthalpy Sensor
G Ultra Low-Leak Downflow Economizer w/ Dry Bulb Sensor
H Low-Leak Downflow Economizer w/ Dry Bulb Sensor
L Ultra Low-Leak Downflow Economizer for DDC controls w/ Dry Bulb Sensor
P Low-Leak Downflow Economizer for DDC controls w/ Dry Bulb Sensor

Electrical
X No Options
A Non-Fused Disconnect
B Phase Monitor
C Thru-the-base connections
E Non-Fused Disconnect and Phase Monitor
F Non-Fused Disconnect and Thru-the-base connections
H Phase Monitor and Thru-the-base connections
L Non-Fused Disconnect, Thru-the-base connections and Phase Monitor

Service Options
X No Option
A Powered convenience outlet
B Non-powered convenience outlet
C Hinge Panels
D Hinged Panels and Powered convenience outlet
E Hinged Panels and non-powered convenience outlet
M Metal frame filter and Hinged Panels (National Account Customers Only)

X No Options

PE Connection
X No Options
B Single-point power connection for Power Exhaust

X No Options

G/E Stocking Models

Daikin 7.5-12.5 Ton Belt-Drive

Model Number	Code String	Model Number	Code String	Model Number	Code String
DRG0903DL00001S	DRG0903D130CAAXXXXXXXXAA	DRG1024DL00001S	DRG1024D130CAAXXXXXXXXAA	DRG1207DL00001S	DRG1207D130CAAXXXXXXXXAA
DRG0903DM00001S	DRG0903D180CAAXXXXXXXXAA	DRG1024DM00001S	DRG1024D180CAAXXXXXXXXAA	DRG1207DM00001S	DRG1207D180CAAXXXXXXXXAA
DRG0903DH00001S	DRG0903D225CAAXXXXXXXXAA	DRG1024DH00001S	DRG1024D225CAAXXXXXXXXAA	DRG1207DH00001S	DRG1207D240CAAXXXXXXXXAA
DRG0904DL00001S	DRG0904D130CAAXXXXXXXXAA	DRG1027DL00001S	DRG1027D130CAAXXXXXXXXAA	DRG1503DL00001S	DRG1503D130CAAXXXXXXXXAA
DRG0904DM00001S	DRG0904D180CAAXXXXXXXXAA	DRG1027DM00001S	DRG1027D180CAAXXXXXXXXAA	DRG1503DM00001S	DRG1503D180CAAXXXXXXXXAA
DRG0904DH00001S	DRG0904D225CAAXXXXXXXXAA	DRG1027DH00001S	DRG1027D225CAAXXXXXXXXAA	DRG1503DH00001S	DRG1503D240CAAXXXXXXXXAA
DRG0907DL00001S	DRG0907D130CAAXXXXXXXXAA	DRG1203DL00001S	DRG1203D130CAAXXXXXXXXAA	DRG1504DL00001S	DRG1504D130CAAXXXXXXXXAA
DRG0907DM00001S	DRG0907D180CAAXXXXXXXXAA	DRG1203DM00001S	DRG1203D180CAAXXXXXXXXAA	DRG1504DM00001S	DRG1504D180CAAXXXXXXXXAA
DRG0907DH00001S	DRG0907D225CAAXXXXXXXXAA	DRG1203DH00001S	DRG1203D240CAAXXXXXXXXAA	DRG1504DH00001S	DRG1504D240CAAXXXXXXXXAA
DRG1023DL00001S	DRG1023D130CAAXXXXXXXXAA	DRG1204DL00001S	DRG1204D130CAAXXXXXXXXAA	DRG1507DL00001S	DRG1507D130CAAXXXXXXXXAA
DRG1023DM00001S	DRG1023D180CAAXXXXXXXXAA	DRG1204DM00001S	DRG1204D180CAAXXXXXXXXAA	DRG1507DM00001S	DRG1507D180CAAXXXXXXXXAA
DRG1023DH00001S	DRG1023D225CAAXXXXXXXXAA	DRG1204DH00001S	DRG1204D240CAAXXXXXXXXAA	DRG1507DH00001S	DRG1507D240CAAXXXXXXXXAA

Daikin Packaged Rooftop Units (RTUs) are built to perform, with features and options that help provide low installation and operation costs, superior indoor air quality, efficient operation, and longevity.

Installation

Daikin Packaged units are designed with fast and easy installation in mind and are ideal for both new construction and retrofit projects. Our packaged rooftop units are built to be a direct replacement for most rooftop units on the field without the need of a curb adapter, to be able to replace the unit in a shorter time and at a lower cost (compared to the previous design).

Cabinet Construction

Daikin packaged rooftop units are made with high quality galvanized steel with a powder-paint finish to provide higher corrosion resistance.

- Easy accessibility using our tool-less filter access
- The interior surface in the indoor air section is fully insulated to prevent sweating and thermal losses, using our foil face fiberglass insulation which also omits exposed filter fibers into the airstream.
- 1" Raised flanged edges around the supply and return offer easy installation for the duct connections.

- The full perimeter base rail is built using heavy gauge galvanized steel for a stronger structural installation. The base rails are a minimum of 3½" tall and include holes to allow for overhead rigging and lifting with forklifts.
- Electrical lines and gas lines can be brought through the base of the unit or through the horizontal knockout for easy installation and accessibility on the field.

Compressor

High performance, low noise scroll compressors to match the required total load.

- Resiliently factory-mounted on rubber grommets for vibration isolation
- Refrigeration circuit includes both low- and high-pressure transducer, high pressure safety switch and temperature sensors for the suction and discharge lines.
- Unit is factory charged with environmentally friendly R-410A refrigerant.
- Compressor location outside the condenser section to avoid air bypass.
- Internal overload protection included with compressor.
- Dual single-stage scroll compressor for partial load applications.

Supply Fan

The direct-drive with airfoil single width, single inlet (SWSI) Class II construction supply fan with aluminum fan +blades provides efficient and quiet operation at wide ranging static pressure and air flow requirements.

- Fan wheel is continuously welded to the hub plate and end rim for long lasting reliable operation.
- Direct-drive ECM motor removes the need for belts, sheaves, or bearings and its permanently lubricated motors provides low maintenance cost.
- Each fan assembly is dynamically trim balanced at the factory before shipment for quick start-up and efficient operation.
- Electromechanical integrated controls modulate the supply fan motor
- Motor with thermal overload is provided for motor long lasting operation.

Coils

All units use large face area outdoor coils. These coils are constructed with seamless copper tubes, mechanically bonded into aluminum plate-type fins with full drawn collars to completely cover the tubes for high operating efficiencies.

The indoor coil section is installed in a draw through configuration to provide better dehumidification.

» Coils are factory pressure tested to ensure pressure and leak integrity.

» Copper tube / aluminum fin coils on condenser and evaporator

» 5mm Smart Coil Technology on all condenser coils for improved performance and reduced refrigerant load.

Controls and Wiring

Packaged rooftop units come equipped with a well-organized, large, easy to use, weatherproof internal control box with easy access, for a better user experience.

» Units are factory-wired with labeled color-coded wires and complete 24-volt Electromechanical controls package.

» Terminal blocks are provided as standard for easy installation and field power wiring.

» The Daikin iLINQ Controller is a factory-installed solution to provide intelligent control for Daikin Light Commercial rooftop units* (RTUs). iLINQ provides physical inputs and outputs to control and monitor the RTU and features a graphic web interface for remote access (via a computer or tablet). Equipped with built-in BACnet™ IP and MS/TP interface or it can be used with an optional LonWorks® card that is available to integrate the Daikin RTU with building automation systems (BMS).

Filtration

Unit provides a draw-through filter section as standard for better air quality and long lasting component maintenance.

» Filters installed on the units are standard off the shelf sizes for easy replacement.

» One size filter per unit for low maintenance cost and easy replacement.

» Tool-less filter access for easy and fast filter replacement and service.

Heating Section

Wide range of natural gas selections effectively handle most comfort heating demand from morning warm-up control to full heat, all available with Daikin's Wrinkle Bend heat exchanger technology.

Gas Furnace

ETL certified heating modules provide a custom match to specific design requirement.

» Wrinkle Bend Technology available on all Daikin gas heat exchangers. The Wrinkle Bend Technology reduces the manufacturing stress that leads to defects and pinholes in the tubes at the same time as it increases the gas turbulence to amplify the heat transfer.

» All 3-Phase models have a minimum 80% T.E. (Thermal Efficiency)

» User has the flexibility to order heat exchanger tubes with 20 Gauge, G160, aluminized steel or stainless steel to meet your application needs.

» The furnace has a tubular design with in-shot gas burner manifold and is installed downstream of the supply fan.

» The module contains an induced draft fan that will maintain a negative pressure in the heat exchanger tubes for the removal of the flue gases to protect indoor air quality.

» Each burner module provides flame roll-out safety protection switches and a high temperature limit switch for reliable operation.

» Induced draft fan includes an airflow safety switch to prevent heating operation in the event of no airflow for occupant safety.

» All burner assemblies are factory tested and adjusted prior to shipment.

» Heating control is fully integrated into the unit's control system for quick start-up and reliable control.

» Optional field installed LP kits are available for staged heating modules as well as high altitude kits.

Electrical

Units are completely wired and tested at the factory to provide faster commissioning and start-up.

» Wiring complies with NEC requirements and all applicable UL standards.

» For ease of use, wiring and electrical components are number coded and labeled according to the electrical diagram.

» A 115 V GFI convenience outlet requiring independent power supply for the receptacle is optional.

» An optional unit powered 20 amp 115 V convenience outlet, complete with factory mounted transformer, disconnect switch, and primary and secondary overload protection, eliminates the need to pull a separate 115 V power source.

» Supply air fan, compressor, and condenser fan motor branch circuits have individual short circuit protection. Unit includes knockouts in the bottom of the main control panels for field wiring entrance.

» A single-point power connection with power block is standard and a terminal board is provided for connecting low voltage control wiring.

» For better serviceability an optional non-fused disconnect switch can be installed inside the control panel and operated by an externally mounted handle to disconnect the electrical power at the unit.

Daikin Modulating Hot Gas Reheat Dehumidification

Using a space sensor in conjunction with the Daikin iLINQ Controller and Reheat Module, the unit can initiate a Dehumidification Mode as the space humidity rises above setpoint. In this mode, the modulating valve diverts a percentage of the hot gas to the reheat coil as required in order to maintain supply air temperature requirements while lowering the space relative humidity. The modulating valve system allows smooth transition into dehumidification and longer run time at a steady supply air temperature. The indoor fan will operate at high and low speed during dehumidification mode.

DAIKIN

Applications

Daikin Rooftop units are intended for comfort cooling applications in normal heating, ventilating, and air conditioning. Consult your local Daikin sales representative for applications involving operations at high ambient temperatures, high altitudes, non-cataloged voltages, or for job-specific unit selections that fall outside of the range of the catalog tables.

For proper operation, units should be rigged in accordance with instructions stated on the installation manual. Fire dampers, if required, must be installed in the ductwork according to local and/or state codes. No space is allowed for these dampers in the unit.

Follow factory check, test and start procedures explicitly to achieve satisfactory start-up and operation.

Most rooftop applications take advantage of the significant energy savings provided with economizer operation. When an economizer system is used, mechanical refrigeration is typically not required below an ambient temperature of 50°F.

Serviceability

Daikin packaged rooftop units are built with serviceability in mind, designed to make future maintenance and service on the unit easy and accessible.

- Our packaged rooftop units offer a slide out blower to facilitate the access and removal of the fan.
- Filter panels on the small chassis line offer tool-less access for easy maintenance.
- Independent compressor outside of the air bypass to eliminate component blockage and provide easy access.
- Labeled field connections, color coded and continuously marked wire to identify point-to-point component connections.
- All 7.5- 12.5 ton units are designed for convertible airflow orientation to serve downflow or horizontal applications. Every unit ships prepared to convert to horizontal orientation in the field if required.
- Condenser clean out from inside-out.
- Easy access to gas valves and control panel.

Model	DRG0903DL000001S	DRG0903DM000001S	DRG0903DH000001S	DRG0904DL00001S	DRG0904DM00001S	DRG0904DH00001S
COOLING CAPACITY						
Total, BTU/h	90,000	90,000	90,000	90,000	90,000	90,000
IEER / EER	16/12.2	16/12.2	16/12.2	16/12.2	16/12.2	16/12.2
AHRI Reference #	206913013	206913013	206913013	206913013	206913013	206913013
HEATING CAPACITY						
Heat Range	LOW	MEDIUM	HIGH	LOW	MEDIUM	HIGH
No. of Burners	5	6	7	5	6	7
High Stage Input / Output (KBTU/H)	130/105.3	180/145.8	225/182.25	130/105.3	180/145.8	225/182.25
Low Stage Input / Output (KBTU/H)	97.5/79	135/109.35	168.75/136.69	97.5/79	135/109.35	168.75/136.69
Thermal Efficiency (T.E.)	81%	81%	81%	81%	81%	81%
Annual Fuel Utilization Efficiency (AFUE)	N/A	N/A	N/A	N/A	N/A	N/A
High Stage Temperature Rise Range (°F)	25 - 55	25 - 55	40 - 70	25 - 55	25 - 55	40 - 70
Low Stage Temperature Rise Range (°F)	25 - 55	25 - 55	40 - 70	25 - 55	25 - 55	40 - 70
EVAPORATOR MOTOR COIL						
Motor Type	DIRECT DRIVE	DIRECT DRIVE	DIRECT DRIVE	DIRECT DRIVE	DIRECT DRIVE	DIRECT DRIVE
External Static Pressure (ESP)	0.8 IN.W.G.	0.8 IN.W.G.	0.8 IN.W.G.	0.8 IN.W.G.	0.8 IN.W.G.	0.8 IN.W.G.
Wheel Dia. X Width	Ø15.12 X 12.62	Ø15.12 X 12.62	Ø15.12 X 12.62	Ø15.12 X 12.62	Ø15.12 X 12.62	Ø15.12 X 12.62
Indoor Nominal CFM	3000	3000	3000	3000	3000	3000
RPM	1300	1300	1300	1300	1300	1300
Indoor Horsepower	2.4	2.4	2.4	2.4	2.4	2.4
Filter Size (in)	16X25X2 (4)	16X25X2 (4)	16X25X2 (4)	16X25X2 (4)	16X25X2 (4)	16X25X2 (4)
Drain Size (NPT)	3/4	3/4	3/4	3/4	3/4	3/4
R-410A Refrigerant Charge (oz.)	140/133	140/133	140/133	140/133	140/133	140/133
Evaporator Coil Face Area (ft^2)	12.8	12.8	12.8	12.8	12.8	12.8
Rows Deep/ Fins per Inch	4/16	4/16	4/16	4/16	4/16	4/16
CONDENSER FAN/COIL						
Quantity of Condenser Fan Motors	2	2	2	2	2	2
RPM (High/Low stage)	1122	1122	1122	1050	1050	1050
Outdoor Horsepower	1/3	1/3	1/3	1/3	1/3	1/3
Fan Diameter/ # Fan Blades	22/3	22/3	22/3	22/3	22/3	22/3
Face Area (ft^2)	35.3	35.3	35.3	35.3	35.3	35.3
Rows Deep / Fins per Inch	2/28±1	2/28±1	2/28±1	2/28±1	2/28±1	2/28±1
COMPRESSOR						
Quantity / Type / Stages	2/SCROLL/1	2/SCROLL/1	2/SCROLL/1	2/SCROLL/1	2/SCROLL/1	2/SCROLL/1
Compressor RLA / LRA	13.1/83.1	13.1/83.1	13.1/83.1	6.1/41.0	6.1/41.0	6.1/41.0
ELECTRICAL DATA						
Voltage-Phase-Frequency	208/230-3-60	208/230-3-60	208/230-3-60	460-3-60	460-3-60	460-3-60
Indoor Blower FLA	8	8	8	5.4	5.4	5.4
Max External Static (In. W.C.)	0.8	0.8	0.8	0.8	0.8	0.8
Outdoor Fan FLA	2	2	2	0.85	0.85	0.85
Min. Circuit Ampacity[1]	41.6/41.6	41.6/41.6	41.6/41.6	20.8	20.8	20.8
Max. Overcurrent Protection (A)[2]	50/50	50/50	50/50	25	25	25
Power Supply Conduit Hole Dia. (in)	1.375	1.375	1.375	1.375	1.375	1.375
Low-VoltageConduit Hole Dia. (in)	0.375	0.375	0.375	0.375	0.375	0.375
OPERATING WEIGHT (LBS.)						
Operating Weight (lbs)	1162	1172	1181	1162	1172	1181
SHIPPING WEIGHT (LBS.)						
Ship Weight (lbs)	1237	1247	1256	1237	1247	1256

[1] Wire size should be determined in accordance with National Electrical Codes. Extensive wire runs will require larger wire sizes.
[2] May use fuses or HACR-type circuit breakers of the same size as noted.
Note: Always check the S&R plate for electrical data on the unit being installed.

Model	DRG0907DL00001S	DRG0907DM00001S	DRG0907DH00001S	DRG1023DL00001S	DRG1023DM00001S	DRG1023DH00001S
COOLING CAPACITY						
Total, BTU/h	90,000	90,000	90,000	102,000	102,000	102,000
IEER / EER	16/12.2	16/12.2	16/12.2	17/12.2	17/12.2	17/12.2
AHRI Reference #	206913013	206913013	206913013	206913015	206913015	206913015
HEATING CAPACITY						
Heat Range	LOW	MEDIUM	HIGH	LOW	MEDIUM	HIGH
No. of Burners	5	6	7	5	6	7
High Stage Input / Output (KBTU/H)	130/105.3	180/145.8	225/182.25	130/105.3	180/145.8	225/182.25
Low Stage Input / Output (KBTU/H)	97.5/79	135/109.35	168.75/136.69	97.5/79	135/109.35	168.75/136.69
Thermal Efficiency (T.E.)	81%	81%	81%	81%	81%	81%
Annual Fuel Utilization Efficiency (AFUE)	N/A	N/A	N/A	N/A	N/A	N/A
High Stage Temperature Rise Range (°F)	25 - 55	25 - 55	40 - 70	25 - 55	25 - 55	40 - 70
Low Stage Temperature Rise Range (°F)	25 - 55	25 - 55	40 - 70	25 - 55	25 - 55	40 - 70
EVAPORATOR MOTOR COIL						
Motor Type	DIRECT DRIVE	DIRECT DRIVE	DIRECT DRIVE	DIRECT DRIVE	DIRECT DRIVE	DIRECT DRIVE
External Static Pressure (ESP)	0.8 IN.W.G.	0.8 IN.W.G.	0.8 IN.W.G.	0.8 IN.W.G.	0.8 IN.W.G.	0.8 IN.W.G.
Wheel Dia. X Width	Ø15.12 X 12.62	Ø15.12 X 12.62	Ø15.12 X 12.62	Ø15.12 X 12.62	Ø15.12 X 12.62	Ø15.12 X 12.62
Indoor Nominal CFM	3000	3000	3000	3100	3100	3100
RPM	1300	1300	1300	1300	1300	1300
Indoor Horsepower	2.4	2.4	2.4	2.4	2.4	2.4
Filter Size (in)	16X25X2 (4)	16X25X2 (4)	16X25X2 (4)	20x25x2(2) + 25x25x2(2)	20x25x2(2) + 25x25x2(2)	20x25x2(2) + 25x25x2(2)
Drain Size (NPT)	3/4	3/4	3/4	3/4	3/4	3/4
R-410A Refrigerant Charge (oz.)	140/133	140/133	140/133	155/155	155/155	155/155
Evaporator Coil Face Area (ft^2)	12.8	12.8	12.8	16.6	16.6	16.6
Rows Deep/ Fins per Inch	4/16	4/16	4/16	4/16	4/16	4/16
CONDENSER FAN/COIL						
Quantity of Condenser Fan Motors	2	2	2	2	2	2
RPM (High/Low stage)	1050	1050	1050	1122	1122	1122
Outdoor Horsepower	1/3	1/3	1/3	1/3	1/3	1/3
Fan Diameter/ # Fan Blades	22/3	22/3	22/3	22/3	22/3	22/3
Face Area (ft^2)	35.3	35.3	35.3	35.3	35.3	35.3
Rows Deep / Fins per Inch	2/28±1	2/28±1	2/28±1	2/28±1	2/28±1	2/28±1
COMPRESSOR						
Quantity / Type / Stages	2/SCROLL/1	2/SCROLL/1	2/SCROLL/1	2/SCROLL/1	2/SCROLL/1	2/SCROLL/1
Compressor RLA / LRA	4.4/33.0	4.4/33.0	4.4/33.0	14.5/98.0	14.5/98.0	14.5/98.0
ELECTRICAL DATA						
Voltage-Phase-Frequency	575-3-60	575-3-60	575-3-60	208/230-3-60	208/230-3-60	208/230-3-60
Indoor Blower FLA	4	4	4	8	8	8
Max External Static (In. W.C.)	0.8	0.8	0.8	0.8	0.8	0.8
Outdoor Fan FLA	0.67	0.67	0.67	2	2	2
Min. Circuit Ampacity[1]	15.1	15.1	15.1	44.6/44.6	44.6/44.6	44.6/44.6
Max. Overcurrent Protection (A)[2]	20	20	20	50/50	50/50	50/50
Power Supply Conduit Hole Dia. (in)	1.375	1.375	1.375	1.375	1.375	1.375
Low-VoltageConduit Hole Dia. (in)	0.375	0.375	0.375	0.375	0.375	0.375
OPERATING WEIGHT (LBS.)						
Operating Weight (lbs)	1162	1172	1181	1173	1183	1192
SHIPPING WEIGHT (LBS.)						
Ship Weight (lbs)	1237	1247	1256	1248	1258	1267

[1] Wire size should be determined in accordance with National Electrical Codes. Extensive wire runs will require larger wire sizes.
[2] May use fuses or HACR-type circuit breakers of the same size as noted.
Note: Always check the S&R plate for electrical data on the unit being installed.

Model	DRG1024DL00001S	DRG1024DM00001S	DRG1024DH00001S	DRG1027DL00001S	DRG1027DM00001S	DRG1027DH00001S
COOLING CAPACITY						
Total, BTU/h	102,000	102,000	102,000	102,000	102,000	102,000
IEER / EER	17/12.2	17/12.2	17/12.2	17/12.2	17/12.2	17/12.2
AHRI Reference #	206913015	206913015	206913015	206913015	206913015	206913015
HEATING CAPACITY						
Heat Range	LOW	MEDIUM	HIGH	LOW	MEDIUM	HIGH
No. of Burners	5	6	7	5	6	7
High Stage Input / Output (KBTU/H)	130/105.3	180/145.8	225/182.25	130/105.3	180/145.8	225/182.25
Low Stage Input / Output (KBTU/H)	97.5/79	135/109.35	168.75/136.69	97.5/79	135/109.35	168.75/136.69
Thermal Efficiency (T.E.)	81%	81%	81%	81%	81%	81%
Annual Fuel Utilization Efficiency (AFUE)	N/A	N/A	N/A	N/A	N/A	N/A
High Stage Temperature Rise Range (°F)	25 - 55	25 - 55	40 - 70	25 - 55	25 - 55	40 - 70
Low Stage Temperature Rise Range (°F)	25 - 55	25 - 55	40 - 70	25 - 55	25 - 55	40 - 70
EVAPORATOR MOTOR COIL						
Motor Type	DIRECT DRIVE	DIRECT DRIVE	DIRECT DRIVE	DIRECT DRIVE	DIRECT DRIVE	DIRECT DRIVE
External Static Pressure (ESP)	0.8 IN.W.G.	0.8 IN.W.G.	0.8 IN.W.G.	0.8 IN.W.G.	0.8 IN.W.G.	0.8 IN.W.G.
Wheel Dia. X Width	Ø15.12 X 12.62	Ø15.12 X 12.62	Ø15.12 X 12.62	Ø15.12 X 12.62	Ø15.12 X 12.62	Ø15.12 X 12.62
Indoor Nominal CFM	3100	3100	3100	3100	3100	3100
RPM	1300	1300	1300	1300	1300	1300
Indoor Horsepower	2.4	2.4	2.4	2.4	2.4	2.4
Filter Size (in)	20x25x2(2) + 25x25x2(2)	20x25x2(2) + 25x25x2(2)	20x25x2(2) + 25x25x2(2)	20x25x2(2) + 25x25x2(2)	20x25x2(2) + 25x25x2(2)	20x25x2(2) + 25x25x2(2)
Drain Size (NPT)	3/4	3/4	3/4	3/4	3/4	3/4
R-410A Refrigerant Charge (oz.)	155/155	155/155	155/155	155/155	155/155	155/155
Evaporator Coil Face Area (ft^2)	16.6	16.6	16.6	16.6	16.6	16.6
Rows Deep/ Fins per Inch	4/16	4/16	4/16	4/16	4/16	4/16
CONDENSER FAN/COIL						
Quantity of Condenser Fan Motors	2	2	2	2	2	2
RPM (High/Low stage)	1050	1050	1050	1050	1050	1050
Outdoor Horsepower	1/3	1/3	1/3	1/3	1/3	1/3
Fan Diameter/ # Fan Blades	22/3	22/3	22/3	22/3	22/3	22/3
Face Area (ft^2)	35.3	35.3	35.3	35.3	35.3	35.3
Rows Deep / Fins per Inch	2/28±1	2/28±1	2/28±1	2/28±1	2/28±1	2/28±1
COMPRESSOR						
Quantity / Type / Stages	2/SCROLL/1	2/SCROLL/1	2/SCROLL/1	2/SCROLL/1	2/SCROLL/1	2/SCROLL/1
Compressor RLA / LRA	6.3/55.0	6.3/55.0	6.3/55.0	6.0/41.0	6.0/41.0	6.0/41.0
ELECTRICAL DATA						
Voltage-Phase-Frequency	460-3-60	460-3-60	460-3-60	575-3-60	575-3-60	575-3-60
Indoor Blower FLA	5.4	5.4	5.4	4	4	4
Max External Static (In. W.C.)	0.8	0.8	0.8	0.8	0.8	0.8
Outdoor Fan FLA	0.85	0.85	0.85	0.67	0.67	0.67
Min. Circuit Ampacity[1]	21.4	21.4	21.4	18.9	18.9	18.9
Max. Overcurrent Protection (A)[2]	25	25	25	20	20	20
Power Supply Conduit Hole Dia. (in)	1.375	1.375	1.375	1.375	1.375	1.375
Low-VoltageConduit Hole Dia. (in)	0.375	0.375	0.375	0.375	0.375	0.375
OPERATING WEIGHT (LBS.)						
Operating Weight (lbs)	1173	1183	1192	1173	1183	1192
SHIPPING WEIGHT (LBS.)						
Ship Weight (lbs)	1248	1258	1267	1248	1258	1267

[1] Wire size should be determined in accordance with National Electrical Codes. Extensive wire runs will require larger wire sizes.
[2] May use fuses or HACR-type circuit breakers of the same size as noted.
Note: Always check the S&R plate for electrical data on the unit being installed.

Model	DRG1203DL00001S	DRG1203DM00001S	DRG1203DH00001S	DRG1204DL00001S	DRG1204DM00001S	DRG1204DH00001S
COOLING CAPACITY						
Total, BTU/h	115,000	115,000	115,000	115,000	115,000	115,000
IEER / EER	17/12.2	17/12.2	17/12.2	17/12.2	17/12.2	17/12.2
AHRI Reference #	206913017	206913017	206913017	206913017	206913017	206913017
HEATING CAPACITY						
Heat Range	LOW	MEDIUM	HIGH	LOW	MEDIUM	HIGH
No. of Burners	5	6	7	5	6	7
High Stage Input / Output (KBTU/H)	130/105.3	180/145.8	240/194.4	130/105.3	180/145.8	240/194.4
Low Stage Input / Output (KBTU/H)	97.5/79	135/109.35	180/145.8	97.5/79	135/109.35	180/145.8
Thermal Efficiency (T.E.)	81%	81%	81%	81%	81%	81%
Annual Fuel Utilization Efficiency (AFUE)	N/A	N/A	N/A	N/A	N/A	N/A
High Stage Temperature Rise Range (°F)	25 - 55	25 - 55	30 - 60	25 - 55	25 - 55	30 - 60
Low Stage Temperature Rise Range (°F)	25 - 55	25 - 55	30 - 60	25 - 55	25 - 55	30 - 60
EVAPORATOR MOTOR COIL						
Motor Type	DIRECT DRIVE	DIRECT DRIVE	DIRECT DRIVE	DIRECT DRIVE	DIRECT DRIVE	DIRECT DRIVE
External Static Pressure (ESP)	0.8 IN.W.G.	0.8 IN.W.G.	0.8 IN.W.G.	0.8 IN.W.G.	0.8 IN.W.G.	0.8 IN.W.G.
Wheel Dia. X Width	Ø15.12 X 15.00	Ø15.12 X 15.00	Ø15.12 X 15.00	Ø15.12 X 15.00	Ø15.12 X 15.00	Ø15.12 X 15.00
Indoor Nominal CFM	3550	3550	3550	3550	3550	3550
RPM	1300	1300	1300	1300	1300	1300
Indoor Horsepower	2.4	2.4	2.4	2.4	2.4	2.4
Filter Size (in)	20x25x2(2) + 25x25x2(2)	20x25x2(2) + 25x25x2(2)	20x25x2(2) + 25x25x2(2)	20x25x2(2) + 25x25x2(2)	20x25x2(2) + 25x25x2(2)	20x25x2(2) + 25x25x2(2)
Drain Size (NPT)	3/4	3/4	3/4	3/4	3/4	3/4
R-410A Refrigerant Charge (oz.)	184/180	184/180	184/180	184/180	184/180	184/180
Evaporator Coil Face Area (ft^2)	16.6	16.6	16.6	16.6	16.6	16.6
Rows Deep/ Fins per Inch	4/16	4/16	4/16	4/16	4/16	4/16
CONDENSER FAN/COIL						
Quantity of Condenser Fan Motors	2	2	2	2	2	2
RPM (High/Low stage)	1122	1122	1122	1050	1050	1050
Outdoor Horsepower	1/3	1/3	1/3	1/3	1/3	1/3
Fan Diameter/ # Fan Blades	22/3	22/3	22/3	22/3	22/3	22/3
Face Area (ft^2)	39.6	39.6	39.6	39.6	39.6	39.6
Rows Deep / Fins per Inch	2/28±1	2/28±1	2/28±1	2/28±1	2/28±1	2/28±1
COMPRESSOR						
Quantity / Type / Stages	2/SCROLL/1	2/SCROLL/1	2/SCROLL/1	2/SCROLL/1	2/SCROLL/1	2/SCROLL/1
Compressor RLA / LRA	15.9/110	15.9/110	15.9/110	7.1/52.0	7.1/52.0	7.1/52.0
ELECTRICAL DATA						
Voltage-Phase-Frequency	208/230-3-60	208/230-3-60	208/230-3-60	460-3-60	460-3-60	460-3-60
Indoor Blower FLA	8	8	8	5.4	5.4	5.4
Max External Static (In. W.C.)	0.8	0.8	0.8	0.8	0.8	0.8
Outdoor Fan FLA	2	2	2	0.85	0.85	0.85
Min. Circuit Ampacity[1]	47.8/47.8	47.8/47.8	47.8/47.8	23	23	23
Max. Overcurrent Protection (A)[2]	60/60	60/60	60/60	30	30	30
Power Supply Conduit Hole Dia. (in)	1.375	1.375	1.375	1.375	1.375	1.375
Low-VoltageConduit Hole Dia. (in)	0.375	0.375	0.375	0.375	0.375	0.375
OPERATING WEIGHT (LBS.)						
Operating Weight (lbs)	1192	1202	1215	1192	1202	1215
SHIPPING WEIGHT (LBS.)						
Ship Weight (lbs)	1267	1277	1290	1267	1277	1290

[1] Wire size should be determined in accordance with National Electrical Codes. Extensive wire runs will require larger wire sizes.
[2] May use fuses or HACR-type circuit breakers of the same size as noted.
Note: Always check the S&R plate for electrical data on the unit being installed.

Model	DRG1207DL00001S	DRG1207DM00001S	DRG1207DH00001S	DRG1503DL00001S	DRG1503DM00001S	DRG1503DH00001S
COOLING CAPACITY						
Total, BTU/h	115,000	115,000	115,000	137,000	137,000	137,000
IEER / EER	17/12.2	17/12.2	17/12.2	15.5/11.5	15.5/11.5	15.5/11.5
AHRI Reference #	206913017	206913017	206913017	206913019	206913019	206913019
HEATING CAPACITY						
Heat Range	LOW	MEDIUM	HIGH	LOW	MEDIUM	HIGH
No. of Burners	5	6	7	5	6	7
High Stage Input / Output (KBTU/H)	130/105.3	180/145.8	240/194.4	130/105.3	180/145.8	240/194.4
Low Stage Input / Output (KBTU/H)	97.5/79	135/109.35	180/145.8	97.5/79	135/109.35	180/145.8
Thermal Efficiency (T.E.)	81%	81%	81%	81%	81%	81%
Annual Fuel Utilization Efficiency (AFUE)	N/A	N/A	N/A	N/A	N/A	N/A
High Stage Temperature Rise Range (°F)	25 - 55	25 - 55	30 - 60	25 - 55	25 - 55	35 - 65
Low Stage Temperature Rise Range (°F)	25 - 55	25 - 55	30 - 60	25 - 55	25 - 55	35 - 65
EVAPORATOR MOTOR COIL						
Motor Type	DIRECT DRIVE	DIRECT DRIVE	DIRECT DRIVE	DIRECT DRIVE	DIRECT DRIVE	DIRECT DRIVE
External Static Pressure (ESP)	0.8 IN.W.G.	0.8 IN.W.G.	0.8 IN.W.G.	0.8 IN.W.G.	0.8 IN.W.G.	0.8 IN.W.G.
Wheel Dia. X Width	Ø15.12 X 15.00	Ø15.12 X 15.00	Ø15.12 X 15.00	Ø15.12 X 15.00	Ø15.12 X 15.00	Ø15.12 X 15.00
Indoor Nominal CFM	3550	3550	3550	3800	3800	3800
RPM	1300	1300	1300	1300	1300	1300
Indoor Horsepower	2.4	2.4	2.4	3.5	3.5	3.5
Filter Size (in)	20x25x2(2) + 25x25x2(2)	20x25x2(2) + 25x25x2(2)	20x25x2(2) + 25x25x2(2)	25x25x2(4)	25x25x2(4)	25x25x2(4)
Drain Size (NPT)	3/4	3/4	3/4	3/4	3/4	3/4
R-410A Refrigerant Charge (oz.)	184/180	184/180	184/180	190/188	190/188	190/188
Evaporator Coil Face Area (ft^2)	16.6	16.6	16.6	19.1	19.1	19.1
Rows Deep/ Fins per Inch	4/16	4/16	4/16	4/16	4/16	4/16
CONDENSER FAN/COIL						
Quantity of Condenser Fan Motors	2	2	2	2	2	2
RPM (High/Low stage)	1050	1050	1050	1122	1122	1122
Outdoor Horsepower	1/3	1/3	1/3	1/3	1/3	1/3
Fan Diameter/ # Fan Blades	22/3	22/3	22/3	22/3	22/3	22/3
Face Area (ft^2)	39.6	39.6	39.6	43.8	43.8	43.8
Rows Deep / Fins per Inch	2/28±1	2/28±1	2/28±1	2/28±1	2/28±1	2/28±1
COMPRESSOR						
Quantity / Type / Stages	2/SCROLL/1	2/SCROLL/1	2/SCROLL/1	2/SCROLL/1	2/SCROLL/1	2/SCROLL/1
Compressor RLA / LRA	5.1/39.5	5.1/39.5	5.1/39.5	19/123.0	19/123.0	19/123.0
ELECTRICAL DATA						
Voltage-Phase-Frequency	575-3-60	575-3-60	575-3-60	208/230-3-60	208/230-3-60	208/230-3-60
Indoor Blower FLA	4	4	4	10.9	10.9	10.9
Max External Static (In. W.C.)	0.8	0.8	0.8	0.8	0.8	0.8
Outdoor Fan FLA	0.67	0.67	0.67	2	2	2
Min. Circuit Ampacity[1]	16.9	16.9	16.9	60.7/60.7	60.7/60.7	60.7/60.7
Max. Overcurrent Protection (A)[2]	20	20	20	70/70	70/70	70/70
Power Supply Conduit Hole Dia. (in)	1.375	1.375	1.375	1.375	1.375	1.375
Low-VoltageConduit Hole Dia. (in)	0.375	0.375	0.375	0.375	0.375	0.375
OPERATING WEIGHT (LBS.)						
Operating Weight (lbs)	1192	1202	1215	1270	1280	1293
SHIPPING WEIGHT (LBS.)						
Ship Weight (lbs)	1267	1277	1290	1345	1355	1368

[1] Wire size should be determined in accordance with National Electrical Codes. Extensive wire runs will require larger wire sizes.
[2] May use fuses or HACR-type circuit breakers of the same size as noted.
Note: Always check the S&R plate for electrical data on the unit being installed.

Model	DRG1504DL00001S	DRG1504DM00001S	DRG1504DH00001S	DRG1507DL00001S	DRG1507DM00001S	DRG1507DH00001S
COOLING CAPACITY						
Total, BTU/h	137,000	137,000	137,000	137,000	137,000	137,000
IEER / EER	15.5/11.5	15.5/11.5	15.5/11.5	15.5/11.5	15.5/11.5	15.5/11.5
AHRI Reference #	206913019	206913019	206913019	206913019	206913019	206913019
HEATING CAPACITY						
Heat Range	LOW	MEDIUM	HIGH	LOW	MEDIUM	HIGH
No. of Burners	5	6	7	5	6	7
High Stage Input / Output (KBTU/H)	130/105.3	180/145.8	240/194.4	130/105.3	180/145.8	240/194.4
Low Stage Input / Output (KBTU/H)	97.5/79	135/109.35	180/145.8	97.5/79	135/109.35	180/145.8
Thermal Efficiency (T.E.)	81%	81%	81%	81%	81%	81%
Annual Fuel Utilization Efficiency (AFUE)	N/A	N/A	N/A	N/A	N/A	N/A
High Stage Temperature Rise Range (°F)	25 - 55	25 - 55	35 - 65	25 - 55	25 - 55	35 - 65
Low Stage Temperature Rise Range (°F)	25 - 55	25 - 55	35 - 65	25 - 55	25 - 55	35 - 65
EVAPORATOR MOTOR COIL						
Motor Type	DIRECT DRIVE	DIRECT DRIVE	DIRECT DRIVE	DIRECT DRIVE	DIRECT DRIVE	DIRECT DRIVE
External Static Pressure (ESP)	0.8 IN.W.G.	0.8 IN.W.G.	0.8 IN.W.G.	0.8 IN.W.G.	0.8 IN.W.G.	0.8 IN.W.G.
Wheel Dia. X Width	Ø15.12 X 15.00	Ø15.12 X 15.00	Ø15.12 X 15.00	Ø15.12 X 15.00	Ø15.12 X 15.00	Ø15.12 X 15.00
Indoor Nominal CFM	3800	3800	3800	3800	3800	3800
RPM	1300	1300	1300	1300	1300	1300
Indoor Horsepower	3.5	3.5	3.5	3.5	3.5	3.5
Filter Size (in)	25x25x2(4)	25x25x2(4)	25x25x2(4)	25x25x2(4)	25x25x2(4)	25x25x2(4)
Drain Size (NPT)	3/4	3/4	3/4	3/4	3/4	3/4
R-410A Refrigerant Charge (oz.)	190/188	190/188	190/188	190/188	190/188	190/188
Evaporator Coil Face Area (ft^2)	19.1	19.1	19.1	19.1	19.1	19.1
Rows Deep/ Fins per Inch	4/16	4/16	4/16	4/16	4/16	4/16
CONDENSER FAN/COIL						
Quantity of Condenser Fan Motors	2	2	2	2	2	2
RPM (High/Low stage)	1050	1050	1050	1050	1050	1050
Outdoor Horsepower	1/3	1/3	1/3	1/3	1/3	1/3
Fan Diameter/ # Fan Blades	22/3	22/3	22/3	22/3	22/3	22/3
Face Area (ft^2)	43.8	43.8	43.8	43.8	43.8	43.8
Rows Deep / Fins per Inch	2/28±1	2/28±1	2/28±1	2/28±1	2/28±1	2/28±1
COMPRESSOR						
Quantity / Type / Stages	2/SCROLL/1	2/SCROLL/1	2/SCROLL/1	2/SCROLL/1	2/SCROLL/1	2/SCROLL/1
Compressor RLA / LRA	9.7/62.0	9.7/62.0	9.7/62.0	7.4/50.0	7.4/50.0	7.4/50.0
ELECTRICAL DATA						
Voltage-Phase-Frequency	460-3-60	460-3-60	460-3-60	575-3-60	575-3-60	575-3-60
Indoor Blower FLA	7.2	7.2	7.2	5	5	5
Max External Static (In. W.C.)	0.8	0.8	0.8	0.8	0.8	0.8
Outdoor Fan FLA	0.85	0.85	0.85	0.67	0.67	0.67
Min. Circuit Ampacity[1]	32.3	32.3	32.3	28.7	28.7	28.7
Max. Overcurrent Protection (A)[2]	40	40	40	35	35	35
Power Supply Conduit Hole Dia. (in)	1.375	1.375	1.375	1.375	1.375	1.375
Low-VoltageConduit Hole Dia. (in)	0.375	0.375	0.375	0.375	0.375	0.375
OPERATING WEIGHT (LBS.)						
Operating Weight (lbs)	1270	1280	1293	1270	1280	1293
SHIPPING WEIGHT (LBS.)						
Ship Weight (lbs)	1345	1355	1368	1345	1355	1368

[1] Wire size should be determined in accordance with National Electrical Codes. Extensive wire runs will require larger wire sizes.
[2] May use fuses or HACR-type circuit breakers of the same size as noted.
Note: Always check the S&R plate for electrical data on the unit being installed.

Model	DRG0903LL000001	DRG0903LM000001	DRG0903LH000001	DRG0904LL00001	DRG0904LM00001	DRG0904LH00001
COOLING CAPACITY						
Total, BTU/h	90,000	90,000	90,000	90,000	90,000	90,000
IEER / EER	16/12.2	16/12.2	16/12.2	16/12.2	16/12.2	16/12.2
AHRI Reference #	206913013	206913013	206913013	206913013	206913013	206913013
HEATING CAPACITY						
Heat Range	LOW	MEDIUM	HIGH	LOW	MEDIUM	HIGH
No. of Burners	5	6	7	5	6	7
High Stage Input / Output (KBTU/H)	130/105.3	180/145.8	225/182.25	130/105.3	180/145.8	225/182.25
Low Stage Input / Output (KBTU/H)	97.5/79	135/109.35	168.75/136.69	97.5/79	135/109.35	168.75/136.69
Thermal Efficiency (T.E.)	81%	81%	81%	81%	81%	81%
Annual Fuel Utilization Efficiency (AFUE)	N/A	N/A	N/A	N/A	N/A	N/A
High Stage Temperature Rise Range (°F)	25 - 55	25 - 55	40 - 70	25 - 55	25 - 55	40 - 70
Low Stage Temperature Rise Range (°F)	25 - 55	25 - 55	40 - 70	25 - 55	25 - 55	40 - 70
EVAPORATOR MOTOR COIL						
Motor Type	DIRECT DRIVE	DIRECT DRIVE	DIRECT DRIVE	DIRECT DRIVE	DIRECT DRIVE	DIRECT DRIVE
External Static Pressure (ESP)	1.4 IN.W.G.	1.4 IN.W.G.	1.4 IN.W.G.	1.4 IN.W.G.	1.4 IN.W.G.	1.4 IN.W.G.
Wheel Dia. X Width	Ø15.12 X 12.62	Ø15.12 X 12.62	Ø15.12 X 12.62	Ø15.12 X 12.62	Ø15.12 X 12.62	Ø15.12 X 12.62
Indoor Nominal CFM	3000	3000	3000	3000	3000	3000
RPM	1300	1300	1300	1300	1300	1300
Indoor Horsepower	2.4	2.4	2.4	2.4	2.4	2.4
Filter Size (in)	16X25X2 (4)	16X25X2 (4)	16X25X2 (4)	16X25X2 (4)	16X25X2 (4)	16X25X2 (4)
Drain Size (NPT)	3/4	3/4	3/4	3/4	3/4	3/4
R-410A Refrigerant Charge (oz.)	140/133	140/133	140/133	140/133	140/133	140/133
Evaporator Coil Face Area (ft^2)	12.8	12.8	12.8	12.8	12.8	12.8
Rows Deep/ Fins per Inch	4/16	4/16	4/16	4/16	4/16	4/16
CONDENSER FAN/COIL						
Quantity of Condenser Fan Motors	2	2	2	2	2	2
RPM (High/Low stage)	1122	1122	1122	1050	1050	1050
Outdoor Horsepower	1/3	1/3	1/3	1/3	1/3	1/3
Fan Diameter/ # Fan Blades	22/3	22/3	22/3	22/3	22/3	22/3
Face Area (ft^2)	35.3	35.3	35.3	35.3	35.3	35.3
Rows Deep / Fins per Inch	2/28±1	2/28±1	2/28±1	2/28±1	2/28±1	2/28±1
COMPRESSOR						
Quantity / Type / Stages	2/SCROLL/1	2/SCROLL/1	2/SCROLL/1	2/SCROLL/1	2/SCROLL/1	2/SCROLL/1
Compressor RLA / LRA	13.1/83.1	13.1/83.1	13.1/83.1	6.1/41.0	6.1/41.0	6.1/41.0
ELECTRICAL DATA						
Voltage-Phase-Frequency	208/230-3-60	208/230-3-60	208/230-3-60	460-3-60	460-3-60	460-3-60
Indoor Blower FLA	8	8	8	5.4	5.4	5.4
Max External Static (In. W.C.)	1.4	1.4	1.4	1.4	1.4	1.4
Outdoor Fan FLA	2	2	2	0.85	0.85	0.85
Min. Circuit Ampacity[1]	41.6/41.6	41.6/41.6	41.6/41.6	20.8	20.8	20.8
Max. Overcurrent Protection (A)[2]	50/50	50/50	50/50	25	25	25
Power Supply Conduit Hole Dia. (in)	1.375	1.375	1.375	1.375	1.375	1.375
Low-VoltageConduit Hole Dia. (in)	0.375	0.375	0.375	0.375	0.375	0.375
OPERATING WEIGHT (LBS.)						
Operating Weight (lbs)	1162	1172	1181	1162	1172	1181
SHIPPING WEIGHT (LBS.)						
Ship Weight (lbs)	1237	1247	1256	1237	1247	1256

[1] Wire size should be determined in accordance with National Electrical Codes. Extensive wire runs will require larger wire sizes.
[2] May use fuses or HACR-type circuit breakers of the same size as noted.
Note: Always check the S&R plate for electrical data on the unit being installed.

Model	DRG0907LL00001	DRG0907LM00001	DRG0907LH00001	DRG1023LL00001	DRG1023LM00001	DRG1023LH00001
COOLING CAPACITY						
Total, BTU/h	90,000	90,000	90,000	102,000	102,000	102,000
IEER / EER	16/12.2	16/12.2	16/12.2	17/12.2	17/12.2	17/12.2
AHRI Reference #	206913013	206913013	206913013	206913015	206913015	206913015
HEATING CAPACITY						
Heat Range	LOW	MEDIUM	HIGH	LOW	MEDIUM	HIGH
No. of Burners	5	6	7	5	6	7
High Stage Input / Output (KBTU/H)	130/105.3	180/145.8	225/182.25	130/105.3	180/145.8	225/182.25
Low Stage Input / Output (KBTU/H)	97.5/79	135/109.35	168.75/136.69	97.5/79	135/109.35	168.75/136.69
Thermal Efficiency (T.E.)	81%	81%	81%	81%	81%	81%
Annual Fuel Utilization Efficiency (AFUE)	N/A	N/A	N/A	N/A	N/A	N/A
High Stage Temperature Rise Range (°F)	25 - 55	25 - 55	40 - 70	25 - 55	25 - 55	40 - 70
Low Stage Temperature Rise Range (°F)	25 - 55	25 - 55	40 - 70	25 - 55	25 - 55	40 - 70
EVAPORATOR MOTOR COIL						
Motor Type	DIRECT DRIVE	DIRECT DRIVE	DIRECT DRIVE	DIRECT DRIVE	DIRECT DRIVE	DIRECT DRIVE
External Static Pressure (ESP)	1.4 IN.W.G.	1.4 IN.W.G.	1.4 IN.W.G.	1.4 IN.W.G.	1.4 IN.W.G.	1.4 IN.W.G.
Wheel Dia. X Width	Ø15.12 X 12.62	Ø15.12 X 12.62	Ø15.12 X 12.62	Ø15.12 X 12.62	Ø15.12 X 12.62	Ø15.12 X 12.62
Indoor Nominal CFM	3000	3000	3000	3100	3100	3100
RPM	1300	1300	1300	1300	1300	1300
Indoor Horsepower	2.4	2.4	2.4	3.5	3.5	3.5
Filter Size (in)	16X25X2 (4)	16X25X2 (4)	16X25X2 (4)	20x25x2(2) + 25x25x2(2)	20x25x2(2) + 25x25x2(2)	20x25x2(2) + 25x25x2(2)
Drain Size (NPT)	3/4	3/4	3/4	3/4	3/4	3/4
R-410A Refrigerant Charge (oz.)	140/133	140/133	140/133	155/155	155/155	155/155
Evaporator Coil Face Area (ft^2)	12.8	12.8	12.8	16.6	16.6	16.6
Rows Deep/ Fins per Inch	4/16	4/16	4/16	4/16	4/16	4/16
CONDENSER FAN/COIL						
Quantity of Condenser Fan Motors	2	2	2	2	2	2
RPM (High/Low stage)	1050	1050	1050	1122	1122	1122
Outdoor Horsepower	1/3	1/3	1/3	1/3	1/3	1/3
Fan Diameter/ # Fan Blades	22/3	22/3	22/3	22/3	22/3	22/3
Face Area (ft^2)	35.3	35.3	35.3	35.3	35.3	35.3
Rows Deep / Fins per Inch	2/28±1	2/28±1	2/28±1	2/28±1	2/28±1	2/28±1
COMPRESSOR						
Quantity / Type / Stages	2/SCROLL/1	2/SCROLL/1	2/SCROLL/1	2/SCROLL/1	2/SCROLL/1	2/SCROLL/1
Compressor RLA / LRA	4.4/33.0	4.4/33.0	4.4/33.0	14.5/98.0	14.5/98.0	14.5/98.0
ELECTRICAL DATA						
Voltage-Phase-Frequency	575-3-60	575-3-60	575-3-60	208/230-3-60	208/230-3-60	208/230-3-60
Indoor Blower FLA	4	4	4	10.9	10.9	10.9
Max External Static (In. W.C.)	1.4	1.4	1.4	1.4	1.4	1.4
Outdoor Fan FLA	0.67	0.67	0.67	2	2	2
Min. Circuit Ampacity[1]	15.1	15.1	15.1	47.5/47.5	47.5/47.5	47.5/47.5
Max. Overcurrent Protection (A)[2]	20	20	20	60/60	60/60	60/60
Power Supply Conduit Hole Dia. (in)	1.375	1.375	1.375	1.375	1.375	1.375
Low-VoltageConduit Hole Dia. (in)	0.375	0.375	0.375	0.375	0.375	0.375
OPERATING WEIGHT (LBS.)						
Operating Weight (lbs)	1162	1172	1181	1173	1183	1192
SHIPPING WEIGHT (LBS.)						
Ship Weight (lbs)	1237	1247	1256	1248	1258	1267

[1] Wire size should be determined in accordance with National Electrical Codes. Extensive wire runs will require larger wire sizes.
[2] May use fuses or HACR-type circuit breakers of the same size as noted.
Note: Always check the S&R plate for electrical data on the unit being installed.

Model	DRG1024LL00001	DRG1024LM00001	DRG1024LH00001	DRG1027LL00001	DRG1027LM00001	DRG1027LH00001
COOLING CAPACITY						
Total, BTU/h	102,000	102,000	102,000	102,000	102,000	102,000
IEER / EER	17/12.2	17/12.2	17/12.2	17/12.2	17/12.2	17/12.2
AHRI Reference #	206913015	206913015	206913015	206913015	206913015	206913015
HEATING CAPACITY						
Heat Range	LOW	MEDIUM	HIGH	LOW	MEDIUM	HIGH
No. of Burners	5	6	7	5	6	7
High Stage Input / Output (KBTU/H)	130/105.3	180/145.8	225/182.25	130/105.3	180/145.8	225/182.25
Low Stage Input / Output (KBTU/H)	97.5/79	135/109.35	168.75/136.69	97.5/79	135/109.35	168.75/136.69
Thermal Efficiency (T.E.)	81%	81%	81%	81%	81%	81%
Annual Fuel Utilization Efficiency (AFUE)	N/A	N/A	N/A	N/A	N/A	N/A
High Stage Temperature Rise Range (°F)	25 - 55	25 - 55	40 - 70	25 - 55	25 - 55	40 - 70
Low Stage Temperature Rise Range (°F)	25 - 55	25 - 55	40 - 70	25 - 55	25 - 55	40 - 70
EVAPORATOR MOTOR COIL						
Motor Type	DIRECT DRIVE	DIRECT DRIVE	DIRECT DRIVE	DIRECT DRIVE	DIRECT DRIVE	DIRECT DRIVE
External Static Pressure (ESP)	1.4 IN.W.G.	1.4 IN.W.G.	1.4 IN.W.G.	1.4 IN.W.G.	1.4 IN.W.G.	1.4 IN.W.G.
Wheel Dia. X Width	Ø15.12 X 12.62	Ø15.12 X 12.62	Ø15.12 X 12.62	Ø15.12 X 12.62	Ø15.12 X 12.62	Ø15.12 X 12.62
Indoor Nominal CFM	3100	3100	3100	3100	3100	3100
RPM	1300	1300	1300	1300	1300	1300
Indoor Horsepower	3.5	3.5	3.5	3.5	3.5	3.5
Filter Size (in)	20x25x2(2) + 25x25x2(2)	20x25x2(2) + 25x25x2(2)	20x25x2(2) + 25x25x2(2)	20x25x2(2) + 25x25x2(2)	20x25x2(2) + 25x25x2(2)	20x25x2(2) + 25x25x2(2)
Drain Size (NPT)	3/4	3/4	3/4	3/4	3/4	3/4
R-410A Refrigerant Charge (oz.)	155/155	155/155	155/155	155/155	155/155	155/155
Evaporator Coil Face Area (ft^2)	16.6	16.6	16.6	16.6	16.6	16.6
Rows Deep/ Fins per Inch	4/16	4/16	4/16	4/16	4/16	4/16
CONDENSER FAN/COIL						
Quantity of Condenser Fan Motors	2	2	2	2	2	2
RPM (High/Low stage)	1050	1050	1050	1050	1050	1050
Outdoor Horsepower	1/3	1/3	1/3	1/3	1/3	1/3
Fan Diameter/ # Fan Blades	22/3	22/3	22/3	22/3	22/3	22/3
Face Area (ft^2)	35.3	35.3	35.3	35.3	35.3	35.3
Rows Deep / Fins per Inch	2/28±1	2/28±1	2/28±1	2/28±1	2/28±1	2/28±1
COMPRESSOR						
Quantity / Type / Stages	2/SCROLL/1	2/SCROLL/1	2/SCROLL/1	2/SCROLL/1	2/SCROLL/1	2/SCROLL/1
Compressor RLA / LRA	6.3/55.0	6.3/55.0	6.3/55.0	6.0/41.0	6.0/41.0	6.0/41.0
ELECTRICAL DATA						
Voltage-Phase-Frequency	460-3-60	460-3-60	460-3-60	575-3-60	575-3-60	575-3-60
Indoor Blower FLA	7.2	7.2	7.2	5	5	5
Max External Static (In. W.C.)	1.4	1.4	1.4	1.4	1.4	1.4
Outdoor Fan FLA	0.85	0.85	0.85	0.67	0.67	0.67
Min. Circuit Ampacity[1]	23.2	23.2	23.2	19.9	19.9	19.9
Max. Overcurrent Protection (A)[2]	25	25	25	25	25	25
Power Supply Conduit Hole Dia. (in)	1.375	1.375	1.375	1.375	1.375	1.375
Low-VoltageConduit Hole Dia. (in)	0.375	0.375	0.375	0.375	0.375	0.375
OPERATING WEIGHT (LBS.)						
Operating Weight (lbs)	1173	1183	1192	1173	1183	1192
SHIPPING WEIGHT (LBS.)						
Ship Weight (lbs)	1248	1258	1267	1248	1258	1267

[1] Wire size should be determined in accordance with National Electrical Codes. Extensive wire runs will require larger wire sizes.
[2] May use fuses or HACR-type circuit breakers of the same size as noted.
Note: Always check the S&R plate for electrical data on the unit being installed.

Model	DRG1203LL00001	DRG1203LM00001	DRG1203LH00001	DRG1204LL00001	DRG1204LM00001	DRG1204LH00001
COOLING CAPACITY						
Total, BTU/h	115,000	115,000	115,000	115,000	115,000	115,000
IEER / EER	17/12.2	17/12.2	17/12.2	17/12.2	17/12.2	17/12.2
AHRI Reference #	206913017	206913017	206913017	206913017	206913017	206913017
HEATING CAPACITY						
Heat Range	LOW	MEDIUM	HIGH	LOW	MEDIUM	HIGH
No. of Burners	5	6	7	5	6	7
High Stage Input / Output (KBTU/H)	130/105.3	180/145.8	240/194.4	130/105.3	180/145.8	240/194.4
Low Stage Input / Output (KBTU/H)	97.5/79	135/109.35	180/145.8	97.5/79	135/109.35	180/145.8
Thermal Efficiency (T.E.)	81%	81%	81%	81%	81%	81%
Annual Fuel Utilization Efficiency (AFUE)	N/A	N/A	N/A	N/A	N/A	N/A
High Stage Temperature Rise Range (°F)	25 - 55	25 - 55	30 - 60	25 - 55	25 - 55	30 - 60
Low Stage Temperature Rise Range (°F)	25 - 55	25 - 55	30 - 60	25 - 55	25 - 55	30 - 60
EVAPORATOR MOTOR COIL						
Motor Type	DIRECT DRIVE	DIRECT DRIVE	DIRECT DRIVE	DIRECT DRIVE	DIRECT DRIVE	DIRECT DRIVE
External Static Pressure (ESP)	1.4 IN.W.G.	1.4 IN.W.G.	1.4 IN.W.G.	1.4 IN.W.G.	1.4 IN.W.G.	1.4 IN.W.G.
Wheel Dia. X Width	Ø15.12 X 15.00	Ø15.12 X 15.00	Ø15.12 X 15.00	Ø15.12 X 15.00	Ø15.12 X 15.00	Ø15.12 X 15.00
Indoor Nominal CFM	3550	3550	3550	3550	3550	3550
RPM	1300	1300	1300	1300	1300	1300
Indoor Horsepower	3.5	3.5	3.5	3.5	3.5	3.5
Filter Size (in)	20x25x2(2) + 25x25x2(2)	20x25x2(2) + 25x25x2(2)	20x25x2(2) + 25x25x2(2)	20x25x2(2) + 25x25x2(2)	20x25x2(2) + 25x25x2(2)	20x25x2(2) + 25x25x2(2)
Drain Size (NPT)	3/4	3/4	3/4	3/4	3/4	3/4
R-410A Refrigerant Charge (oz.)	184/180	184/180	184/180	184/180	184/180	184/180
Evaporator Coil Face Area (ft^2)	16.6	16.6	16.6	16.6	16.6	16.6
Rows Deep/ Fins per Inch	4/16	4/16	4/16	4/16	4/16	4/16
CONDENSER FAN/COIL						
Quantity of Condenser Fan Motors	2	2	2	2	2	2
RPM (High/Low stage)	1122	1122	1122	1050	1050	1050
Outdoor Horsepower	1/3	1/3	1/3	1/3	1/3	1/3
Fan Diameter/ # Fan Blades	22/3	22/3	22/3	22/3	22/3	22/3
Face Area (ft^2)	39.6	39.6	39.6	39.6	39.6	39.6
Rows Deep / Fins per Inch	2/28±1	2/28±1	2/28±1	2/28±1	2/28±1	2/28±1
COMPRESSOR						
Quantity / Type / Stages	2/SCROLL/1	2/SCROLL/1	2/SCROLL/1	2/SCROLL/1	2/SCROLL/1	2/SCROLL/1
Compressor RLA / LRA	15.9/110	15.9/110	15.9/110	7.1/52.0	7.1/52.0	7.1/52.0
ELECTRICAL DATA						
Voltage-Phase-Frequency	208/230-3-60	208/230-3-60	208/230-3-60	460-3-60	460-3-60	460-3-60
Indoor Blower FLA	10.9	10.9	10.9	7.2	7.2	7.2
Max External Static (In. W.C.)	1.4	1.4	1.4	1.4	1.4	1.4
Outdoor Fan FLA	2	2	2	0.85	0.85	0.85
Min. Circuit Ampacity[1]	50.7/50.7	50.7/50.7	50.7/50.7	24.8	24.8	24.8
Max. Overcurrent Protection (A)[2]	60/60	60/60	60/60	30	30	30
Power Supply Conduit Hole Dia. (in)	1.375	1.375	1.375	1.375	1.375	1.375
Low-VoltageConduit Hole Dia. (in)	0.375	0.375	0.375	0.375	0.375	0.375
OPERATING WEIGHT (LBS.)						
Operating Weight (lbs)	1192	1202	1215	1192	1202	1215
SHIPPING WEIGHT (LBS.)						
Ship Weight (lbs)	1267	1277	1290	1267	1277	1290

[1] Wire size should be determined in accordance with National Electrical Codes. Extensive wire runs will require larger wire sizes.
[2] May use fuses or HACR-type circuit breakers of the same size as noted.
Note: Always check the S&R plate for electrical data on the unit being installed.

Model	DRG1207LL00001	DRG1207LM00001	DRG1207LH00001	DRG1503LL00001	DRG1503LM00001	DRG1503LH00001
COOLING CAPACITY						
Total, BTU/h	115,000	115,000	115,000	137,000	137,000	137,000
IEER / EER	17/12.2	17/12.2	17/12.2	15.5/11.5	15.5/11.5	15.5/11.5
AHRI Reference #	206913017	206913017	206913017	206913019	206913019	206913019
HEATING CAPACITY						
Heat Range	LOW	MEDIUM	HIGH	LOW	MEDIUM	HIGH
No. of Burners	5	6	7	5	6	7
High Stage Input / Output (KBTU/H)	130/105.3	180/145.8	240/194.4	130/105.3	180/145.8	240/194.4
Low Stage Input / Output (KBTU/H)	97.5/79	135/109.35	180/145.8	97.5/79	135/109.35	180/145.8
Thermal Efficiency (T.E.)	81%	81%	81%	81%	81%	81%
Annual Fuel Utilization Efficiency (AFUE)	N/A	N/A	N/A	N/A	N/A	N/A
High Stage Temperature Rise Range (°F)	25 - 55	25 - 55	30 - 60	25 - 55	25 - 55	35 - 65
Low Stage Temperature Rise Range (°F)	25 - 55	25 - 55	30 - 60	25 - 55	25 - 55	35 - 65
EVAPORATOR MOTOR COIL						
Motor Type	DIRECT DRIVE	DIRECT DRIVE	DIRECT DRIVE	DIRECT DRIVE	DIRECT DRIVE	DIRECT DRIVE
External Static Pressure (ESP)	1.4 IN.W.G.	1.4 IN.W.G.	1.4 IN.W.G.	1.4 IN.W.G.	1.4 IN.W.G.	1.4 IN.W.G.
Wheel Dia. X Width	Ø15.12 X 15.00	Ø15.12 X 15.00	Ø15.12 X 15.00	Ø15.12 X 15.00	Ø15.12 X 15.00	Ø15.12 X 15.00
Indoor Nominal CFM	3550	3550	3550	3800	3800	3800
RPM	1300	1300	1300	1300	1300	1300
Indoor Horsepower	3.5	3.5	3.5	3.5	3.5	3.5
Filter Size (in)	20x25x2(2) + 25x25x2(2)	20x25x2(2) + 25x25x2(2)	20x25x2(2) + 25x25x2(2)	25x25x2(4)	25x25x2(4)	25x25x2(4)
Drain Size (NPT)	3/4	3/4	3/4	3/4	3/4	3/4
R-410A Refrigerant Charge (oz.)	184/180	184/180	184/180	190/188	190/188	190/188
Evaporator Coil Face Area (ft^2)	16.6	16.6	16.6	19.1	19.1	19.1
Rows Deep/ Fins per Inch	4/16	4/16	4/16	4/16	4/16	4/16
CONDENSER FAN/COIL						
Quantity of Condenser Fan Motors	2	2	2	2	2	2
RPM (High/Low stage)	1050	1050	1050	1122	1122	1122
Outdoor Horsepower	1/3	1/3	1/3	1/3	1/3	1/3
Fan Diameter/ # Fan Blades	22/3	22/3	22/3	22/3	22/3	22/3
Face Area (ft^2)	39.6	39.6	39.6	43.8	43.8	43.8
Rows Deep / Fins per Inch	2/28±1	2/28±1	2/28±1	2/28±1	2/28±1	2/28±1
COMPRESSOR						
Quantity / Type / Stages	2/SCROLL/1	2/SCROLL/1	2/SCROLL/1	2/SCROLL/1	2/SCROLL/1	2/SCROLL/1
Compressor RLA / LRA	5.1/39.5	5.1/39.5	5.1/39.5	19/123.0	19/123.0	19/123.0
ELECTRICAL DATA						
Voltage-Phase-Frequency	575-3-60	575-3-60	575-3-60	208/230-3-60	208/230-3-60	208/230-3-60
Indoor Blower FLA	5	5	5	10.9	10.9	10.9
Max External Static (In. W.C.)	1.4	1.4	1.4	1.4	1.4	1.4
Outdoor Fan FLA	0.67	0.67	0.67	2	2	2
Min. Circuit Ampacity[1]	17.9	17.9	17.9	60.7/60.7	60.7/60.7	60.7/60.7
Max. Overcurrent Protection (A)[2]	20	20	20	70/70	70/70	70/70
Power Supply Conduit Hole Dia. (in)	1.375	1.375	1.375	1.375	1.375	1.375
Low-VoltageConduit Hole Dia. (in)	0.375	0.375	0.375	0.375	0.375	0.375
OPERATING WEIGHT (LBS.)						
Operating Weight (lbs)	1192	1202	1215	1270	1280	1293
SHIPPING WEIGHT (LBS.)						
Ship Weight (lbs)	1267	1277	1290	1345	1355	1368

[1] Wire size should be determined in accordance with National Electrical Codes. Extensive wire runs will require larger wire sizes.
[2] May use fuses or HACR-type circuit breakers of the same size as noted.
Note: Always check the S&R plate for electrical data on the unit being installed.

Model	DRG1504LL00001	DRG1504LM00001	DRG1504LH00001	DRG1507LL00001	DRG1507LM00001	DRG1507LH00001
COOLING CAPACITY						
Total, BTU/h	137,000	137,000	137,000	137,000	137,000	137,000
IEER / EER	15.5/11.5	15.5/11.5	15.5/11.5	15.5/11.5	15.5/11.5	15.5/11.5
AHRI Reference #	206913019	206913019	206913019	206913019	206913019	206913019
HEATING CAPACITY						
Heat Range	LOW	MEDIUM	HIGH	LOW	MEDIUM	HIGH
No. of Burners	5	6	7	5	6	7
High Stage Input / Output (KBTU/H)	130/105.3	180/145.8	240/194.4	130/105.3	180/145.8	240/194.4
Low Stage Input / Output (KBTU/H)	97.5/79	135/109.35	180/145.8	97.5/79	135/109.35	180/145.8
Thermal Efficiency (T.E.)	81%	81%	81%	81%	81%	81%
Annual Fuel Utilization Efficiency (AFUE)	N/A	N/A	N/A	N/A	N/A	N/A
High Stage Temperature Rise Range (°F)	25 - 55	25 - 55	35 - 65	25 - 55	25 - 55	35 - 65
Low Stage Temperature Rise Range (°F)	25 - 55	25 - 55	35 - 65	25 - 55	25 - 55	35 - 65
EVAPORATOR MOTOR COIL						
Motor Type	DIRECT DRIVE	DIRECT DRIVE	DIRECT DRIVE	DIRECT DRIVE	DIRECT DRIVE	DIRECT DRIVE
External Static Pressure (ESP)	1.4 IN.W.G.	1.4 IN.W.G.	1.4 IN.W.G.	1.4 IN.W.G.	1.4 IN.W.G.	1.4 IN.W.G.
Wheel Dia. X Width	Ø15.12 X 15.00	Ø15.12 X 15.00	Ø15.12 X 15.00	Ø15.12 X 15.00	Ø15.12 X 15.00	Ø15.12 X 15.00
Indoor Nominal CFM	3800	3800	3800	3800	3800	3800
RPM	1300	1300	1300	1300	1300	1300
Indoor Horsepower	3.5	3.5	3.5	3.5	3.5	3.5
Filter Size (in)	25x25x2(4)	25x25x2(4)	25x25x2(4)	25x25x2(4)	25x25x2(4)	25x25x2(4)
Drain Size (NPT)	3/4	3/4	3/4	3/4	3/4	3/4
R-410A Refrigerant Charge (oz.)	190/188	190/188	190/188	190/188	190/188	190/188
Evaporator Coil Face Area (ft^2)	19.1	19.1	19.1	19.1	19.1	19.1
Rows Deep/ Fins per Inch	4/16	4/16	4/16	4/16	4/16	4/16
CONDENSER FAN/COIL						
Quantity of Condenser Fan Motors	2	2	2	2	2	2
RPM (High/Low stage)	1050	1050	1050	1050	1050	1050
Outdoor Horsepower	1/3	1/3	1/3	1/3	1/3	1/3
Fan Diameter/ # Fan Blades	22/3	22/3	22/3	22/3	22/3	22/3
Face Area (ft^2)	43.8	43.8	43.8	43.8	43.8	43.8
Rows Deep / Fins per Inch	2/28±1	2/28±1	2/28±1	2/28±1	2/28±1	2/28±1
COMPRESSOR						
Quantity / Type / Stages	2/SCROLL/1	2/SCROLL/1	2/SCROLL/1	2/SCROLL/1	2/SCROLL/1	2/SCROLL/1
Compressor RLA / LRA	9.7/62.0	9.7/62.0	9.7/62.0	7.4/50.0	7.4/50.0	7.4/50.0
ELECTRICAL DATA						
Voltage-Phase-Frequency	460-3-60	460-3-60	460-3-60	575-3-60	575-3-60	575-3-60
Indoor Blower FLA	7.2	7.2	7.2	5	5	5
Max External Static (In. W.C.)	1.4	1.4	1.4	1.4	1.4	1.4
Outdoor Fan FLA	0.85	0.85	0.85	0.67	0.67	0.67
Min. Circuit Ampacity[1]	32.3	32.3	32.3	28.7	28.7	28.7
Max. Overcurrent Protection (A)[2]	40	40	40	35	35	35
Power Supply Conduit Hole Dia. (in)	1.375	1.375	1.375	1.375	1.375	1.375
Low-VoltageConduit Hole Dia. (in)	0.375	0.375	0.375	0.375	0.375	0.375
OPERATING WEIGHT (LBS.)						
Operating Weight (lbs)	1270	1280	1293	1270	1280	1293
SHIPPING WEIGHT (LBS.)						
Ship Weight (lbs)	1345	1355	1368	1345	1355	1368

[1] Wire size should be determined in accordance with National Electrical Codes. Extensive wire runs will require larger wire sizes.
[2] May use fuses or HACR-type circuit breakers of the same size as noted.
Note: Always check the S&R plate for electrical data on the unit being installed.

Model	DRG0903WL000001	DRG0903WM000001	DRG0903WH000001	DRG0904WL00001	DRG0904WM00001	DRG0904WH00001
COOLING CAPACITY						
Total, BTU/h	90,000	90,000	90,000	90,000	90,000	90,000
IEER / EER	16/12.2	16/12.2	16/12.2	16/12.2	16/12.2	16/12.2
AHRI Reference #	206913013	206913013	206913013	206913013	206913013	206913013
HEATING CAPACITY						
Heat Range	LOW	MEDIUM	HIGH	LOW	MEDIUM	HIGH
No. of Burners	5	6	7	5	6	7
High Stage Input / Output (KBTU/H)	130/105.3	180/145.8	225/182.25	130/105.3	180/145.8	225/182.25
Low Stage Input / Output (KBTU/H)	97.5/79	135/109.35	168.75/136.69	97.5/79	135/109.35	168.75/136.69
Thermal Efficiency (T.E.)	81%	81%	81%	81%	81%	81%
Annual Fuel Utilization Efficiency (AFUE)	N/A	N/A	N/A	N/A	N/A	N/A
High Stage Temperature Rise Range (°F)	25 - 55	25 - 55	40 - 70	25 - 55	25 - 55	40 - 70
Low Stage Temperature Rise Range (°F)	25 - 55	25 - 55	40 - 70	25 - 55	25 - 55	40 - 70
EVAPORATOR MOTOR COIL						
Motor Type	DIRECT DRIVE	DIRECT DRIVE	DIRECT DRIVE	DIRECT DRIVE	DIRECT DRIVE	DIRECT DRIVE
External Static Pressure (ESP)	2.0 IN.W.G.	2.0 IN.W.G.	2.0 IN.W.G.	2.0 IN.W.G.	2.0 IN.W.G.	2.0 IN.W.G.
Wheel Dia. X Width	Ø15.12 X 12.62	Ø15.12 X 12.62	Ø15.12 X 12.62	Ø15.12 X 12.62	Ø15.12 X 12.62	Ø15.12 X 12.62
Indoor Nominal CFM	3000	3000	3000	3000	3000	3000
RPM	1300	1300	1300	1300	1300	1300
Indoor Horsepower	3.5	3.5	3.5	3.5	3.5	3.5
Filter Size (in)	16X25X2 (4)	16X25X2 (4)	16X25X2 (4)	16X25X2 (4)	16X25X2 (4)	16X25X2 (4)
Drain Size (NPT)	3/4	3/4	3/4	3/4	3/4	3/4
R-410A Refrigerant Charge (oz.)	140/133	140/133	140/133	140/133	140/133	140/133
Evaporator Coil Face Area (ft^2)	12.8	12.8	12.8	12.8	12.8	12.8
Rows Deep/ Fins per Inch	4/16	4/16	4/16	4/16	4/16	4/16
CONDENSER FAN/COIL						
Quantity of Condenser Fan Motors	2	2	2	2	2	2
RPM (High/Low stage)	1122	1122	1122	1050	1050	1050
Outdoor Horsepower	1/3	1/3	1/3	1/3	1/3	1/3
Fan Diameter/ # Fan Blades	22/3	22/3	22/3	22/3	22/3	22/3
Face Area (ft^2)	35.3	35.3	35.3	35.3	35.3	35.3
Rows Deep / Fins per Inch	2/28±1	2/28±1	2/28±1	2/28±1	2/28±1	2/28±1
COMPRESSOR						
Quantity / Type / Stages	2/SCROLL/1	2/SCROLL/1	2/SCROLL/1	2/SCROLL/1	2/SCROLL/1	2/SCROLL/1
Compressor RLA / LRA	13.1/83.1	13.1/83.1	13.1/83.1	6.1/41.0	6.1/41.0	6.1/41.0
ELECTRICAL DATA						
Voltage-Phase-Frequency	208/230-3-60	208/230-3-60	208/230-3-60	460-3-60	460-3-60	460-3-60
Indoor Blower FLA	10.9	10.9	10.9	7.2	7.2	7.2
Max External Static (In. W.C.)	2	2	2	2	2	2
Outdoor Fan FLA	2	2	2	0.85	0.85	0.85
Min. Circuit Ampacity[1]	44.5/44.5	44.5/44.5	44.5/44.5	22.6	22.6	22.6
Max. Overcurrent Protection (A)[2]	50/50	50/50	50/50	25	25	25
Power Supply Conduit Hole Dia. (in)	1.375	1.375	1.375	1.375	1.375	1.375
Low-VoltageConduit Hole Dia. (in)	0.375	0.375	0.375	0.375	0.375	0.375
OPERATING WEIGHT (LBS.)						
Operating Weight (lbs)	1162	1172	1181	1162	1172	1181
SHIPPING WEIGHT (LBS.)						
Ship Weight (lbs)	1237	1247	1256	1237	1247	1256

[1] Wire size should be determined in accordance with National Electrical Codes. Extensive wire runs will require larger wire sizes.
[2] May use fuses or HACR-type circuit breakers of the same size as noted.
Note: Always check the S&R plate for electrical data on the unit being installed.

Model	DRG0907WL00001	DRG0907WM00001	DRG0907WH00001	DRG1023WL00001	DRG1023WM00001	DRG1023WH00001
COOLING CAPACITY						
Total, BTU/h	90,000	90,000	90,000	102,000	102,000	102,000
IEER / EER	16/12.2	16/12.2	16/12.2	17/12.2	17/12.2	17/12.2
AHRI Reference #	206913013	206913013	206913013	206913015	206913015	206913015
HEATING CAPACITY						
Heat Range	LOW	MEDIUM	HIGH	LOW	MEDIUM	HIGH
No. of Burners	5	6	7	5	6	7
High Stage Input / Output (KBTU/H)	130/105.3	180/145.8	225/182.25	130/105.3	180/145.8	225/182.25
Low Stage Input / Output (KBTU/H)	97.5/79	135/109.35	168.75/136.69	97.5/79	135/109.35	168.75/136.69
Thermal Efficiency (T.E.)	81%	81%	81%	81%	81%	81%
Annual Fuel Utilization Efficiency (AFUE)	N/A	N/A	N/A	N/A	N/A	N/A
High Stage Temperature Rise Range (°F)	25 - 55	25 - 55	40 - 70	25 - 55	25 - 55	40 - 70
Low Stage Temperature Rise Range (°F)	25 - 55	25 - 55	40 - 70	25 - 55	25 - 55	40 - 70
EVAPORATOR MOTOR COIL						
Motor Type	DIRECT DRIVE	DIRECT DRIVE	DIRECT DRIVE	DIRECT DRIVE	DIRECT DRIVE	DIRECT DRIVE
External Static Pressure (ESP)	2.0 IN.W.G.	2.0 IN.W.G.	2.0 IN.W.G.	2.0 IN.W.G.	2.0 IN.W.G.	2.0 IN.W.G.
Wheel Dia. X Width	Ø15.12 X 12.62	Ø15.12 X 12.62	Ø15.12 X 12.62	Ø15.12 X 12.62	Ø15.12 X 12.62	Ø15.12 X 12.62
Indoor Nominal CFM	3000	3000	3000	3100	3100	3100
RPM	1300	1300	1300	1300	1300	1300
Indoor Horsepower	3.5	3.5	3.5	3.5	3.5	3.5
Filter Size (in)	16X25X2 (4)	16X25X2 (4)	16X25X2 (4)	20x25x2(2) + 25x25x2(2)	20x25x2(2) + 25x25x2(2)	20x25x2(2) + 25x25x2(2)
Drain Size (NPT)	3/4	3/4	3/4	3/4	3/4	3/4
R-410A Refrigerant Charge (oz.)	140/133	140/133	140/133	155/155	155/155	155/155
Evaporator Coil Face Area (ft^2)	12.8	12.8	12.8	16.6	16.6	16.6
Rows Deep/ Fins per Inch	4/16	4/16	4/16	4/16	4/16	4/16
CONDENSER FAN/COIL						
Quantity of Condenser Fan Motors	2	2	2	2	2	2
RPM (High/Low stage)	1050	1050	1050	1122	1122	1122
Outdoor Horsepower	1/3	1/3	1/3	1/3	1/3	1/3
Fan Diameter/ # Fan Blades	22/3	22/3	22/3	22/3	22/3	22/3
Face Area (ft^2)	35.3	35.3	35.3	35.3	35.3	35.3
Rows Deep / Fins per Inch	2/28±1	2/28±1	2/28±1	2/28±1	2/28±1	2/28±1
COMPRESSOR						
Quantity / Type / Stages	2/SCROLL/1	2/SCROLL/1	2/SCROLL/1	2/SCROLL/1	2/SCROLL/1	2/SCROLL/1
Compressor RLA / LRA	4.4/33.0	4.4/33.0	4.4/33.0	14.5/98.0	14.5/98.0	14.5/98.0
ELECTRICAL DATA						
Voltage-Phase-Frequency	575-3-60	575-3-60	575-3-60	208/230-3-60	208/230-3-60	208/230-3-60
Indoor Blower FLA	5	5	5	10.9	10.9	10.9
Max External Static (In. W.C.)	2	2	2	2	2	2
Outdoor Fan FLA	0.67	0.67	0.67	2	2	2
Min. Circuit Ampacity[1]	16.1	16.1	16.1	47.5/47.5	47.5/47.5	47.5/47.5
Max. Overcurrent Protection (A)[2]	20	20	20	60/60	60/60	60/60
Power Supply Conduit Hole Dia. (in)	1.375	1.375	1.375	1.375	1.375	1.375
Low-VoltageConduit Hole Dia. (in)	0.375	0.375	0.375	0.375	0.375	0.375
OPERATING WEIGHT (LBS.)						
Operating Weight (lbs)	1162	1172	1181	1173	1183	1192
SHIPPING WEIGHT (LBS.)						
Ship Weight (lbs)	1237	1247	1256	1248	1258	1267

[1] Wire size should be determined in accordance with National Electrical Codes. Extensive wire runs will require larger wire sizes.
[2] May use fuses or HACR-type circuit breakers of the same size as noted.
Note: Always check the S&R plate for electrical data on the unit being installed.

Model	DRG1024WL00001	DRG1024WM00001	DRG1024WH00001	DRG1027WL00001	DRG1027WM00001	DRG1027WH00001
COOLING CAPACITY						
Total, BTU/h	102,000	102,000	102,000	102,000	102,000	102,000
IEER / EER	17/12.2	17/12.2	17/12.2	17/12.2	17/12.2	17/12.2
AHRI Reference #	206913015	206913015	206913015	206913015	206913015	206913015
HEATING CAPACITY						
Heat Range	LOW	MEDIUM	HIGH	LOW	MEDIUM	HIGH
No. of Burners	5	6	7	5	6	7
High Stage Input / Output (KBTU/H)	130/105.3	180/145.8	225/182.25	130/105.3	180/145.8	225/182.25
Low Stage Input / Output (KBTU/H)	97.5/79	135/109.35	168.75/136.69	97.5/79	135/109.35	168.75/136.69
Thermal Efficiency (T.E.)	81%	81%	81%	81%	81%	81%
Annual Fuel Utilization Efficiency (AFUE)	N/A	N/A	N/A	N/A	N/A	N/A
High Stage Temperature Rise Range (°F)	25 - 55	25 - 55	40 - 70	25 - 55	25 - 55	40 - 70
Low Stage Temperature Rise Range (°F)	25 - 55	25 - 55	40 - 70	25 - 55	25 - 55	40 - 70
EVAPORATOR MOTOR COIL						
Motor Type	DIRECT DRIVE	DIRECT DRIVE	DIRECT DRIVE	DIRECT DRIVE	DIRECT DRIVE	DIRECT DRIVE
External Static Pressure (ESP)	2.0 IN.W.G.	2.0 IN.W.G.	2.0 IN.W.G.	2.0 IN.W.G.	2.0 IN.W.G.	2.0 IN.W.G.
Wheel Dia. X Width	Ø15.12 X 12.62	Ø15.12 X 12.62	Ø15.12 X 12.62	Ø15.12 X 12.62	Ø15.12 X 12.62	Ø15.12 X 12.62
Indoor Nominal CFM	3100	3100	3100	3100	3100	3100
RPM	1300	1300	1300	1300	1300	1300
Indoor Horsepower	3.5	3.5	3.5	3.5	3.5	3.5
Filter Size (in)	20x25x2(2) + 25x25x2(2)	20x25x2(2) + 25x25x2(2)	20x25x2(2) + 25x25x2(2)	20x25x2(2) + 25x25x2(2)	20x25x2(2) + 25x25x2(2)	20x25x2(2) + 25x25x2(2)
Drain Size (NPT)	3/4	3/4	3/4	3/4	3/4	3/4
R-410A Refrigerant Charge (oz.)	155/155	155/155	155/155	155/155	155/155	155/155
Evaporator Coil Face Area (ft^2)	16.6	16.6	16.6	16.6	16.6	16.6
Rows Deep/ Fins per Inch	4/16	4/16	4/16	4/16	4/16	4/16
CONDENSER FAN/COIL						
Quantity of Condenser Fan Motors	2	2	2	2	2	2
RPM (High/Low stage)	1050	1050	1050	1050	1050	1050
Outdoor Horsepower	1/3	1/3	1/3	1/3	1/3	1/3
Fan Diameter/ # Fan Blades	22/3	22/3	22/3	22/3	22/3	22/3
Face Area (ft^2)	35.3	35.3	35.3	35.3	35.3	35.3
Rows Deep / Fins per Inch	2/28±1	2/28±1	2/28±1	2/28±1	2/28±1	2/28±1
COMPRESSOR						
Quantity / Type / Stages	2/SCROLL/1	2/SCROLL/1	2/SCROLL/1	2/SCROLL/1	2/SCROLL/1	2/SCROLL/1
Compressor RLA / LRA	6.3/55.0	6.3/55.0	6.3/55.0	6.0/41.0	6.0/41.0	6.0/41.0
ELECTRICAL DATA						
Voltage-Phase-Frequency	460-3-60	460-3-60	460-3-60	575-3-60	575-3-60	575-3-60
Indoor Blower FLA	7.2	7.2	7.2	5	5	5
Max External Static (In. W.C.)	2	2	2	2	2	2
Outdoor Fan FLA	0.85	0.85	0.85	0.67	0.67	0.67
Min. Circuit Ampacity[1]	23.2	23.2	23.2	19.9	19.9	19.9
Max. Overcurrent Protection (A)[2]	25	25	25	25	25	25
Power Supply Conduit Hole Dia. (in)	1.375	1.375	1.375	1.375	1.375	1.375
Low-VoltageConduit Hole Dia. (in)	0.375	0.375	0.375	0.375	0.375	0.375
OPERATING WEIGHT (LBS.)						
Operating Weight (lbs)	1173	1183	1192	1173	1183	1192
SHIPPING WEIGHT (LBS.)						
Ship Weight (lbs)	1248	1258	1267	1248	1258	1267

[1] Wire size should be determined in accordance with National Electrical Codes. Extensive wire runs will require larger wire sizes.
[2] May use fuses or HACR-type circuit breakers of the same size as noted.
Note: Always check the S&R plate for electrical data on the unit being installed.

Model	DRG1203WL00001	DRG1203WM00001	DRG1203WH00001	DRG1204WL00001	DRG1204WM00001	DRG1204WH00001
COOLING CAPACITY						
Total, BTU/h	115,000	115,000	115,000	115,000	115,000	115,000
IEER / EER	17/12.2	17/12.2	17/12.2	17/12.2	17/12.2	17/12.2
AHRI Reference #	206913017	206913017	206913017	206913017	206913017	206913017
HEATING CAPACITY						
Heat Range	LOW	MEDIUM	HIGH	LOW	MEDIUM	HIGH
No. of Burners	5	6	7	5	6	7
High Stage Input / Output (KBTU/H)	130/105.3	180/145.8	240/194.4	130/105.3	180/145.8	240/194.4
Low Stage Input / Output (KBTU/H)	97.5/79	135/109.35	180/145.8	97.5/79	135/109.35	180/145.8
Thermal Efficiency (T.E.)	81%	81%	81%	81%	81%	81%
Annual Fuel Utilization Efficiency (AFUE)	N/A	N/A	N/A	N/A	N/A	N/A
High Stage Temperature Rise Range (°F)	25 - 55	25 - 55	30 - 60	25 - 55	25 - 55	30 - 60
Low Stage Temperature Rise Range (°F)	25 - 55	25 - 55	30 - 60	25 - 55	25 - 55	30 - 60
EVAPORATOR MOTOR COIL						
Motor Type	DIRECT DRIVE	DIRECT DRIVE	DIRECT DRIVE	DIRECT DRIVE	DIRECT DRIVE	DIRECT DRIVE
External Static Pressure (ESP)	2.0 IN.W.G.	2.0 IN.W.G.	2.0 IN.W.G.	2.0 IN.W.G.	2.0 IN.W.G.	2.0 IN.W.G.
Wheel Dia. X Width	Ø15.12 X 15.00	Ø15.12 X 15.00	Ø15.12 X 15.00	Ø15.12 X 15.00	Ø15.12 X 15.00	Ø15.12 X 15.00
Indoor Nominal CFM	3550	3550	3550	3550	3550	3550
RPM	1300	1300	1300	1300	1300	1300
Indoor Horsepower	5	5	5	5	5	5
Filter Size (in)	20x25x2(2) + 25x25x2(2)	20x25x2(2) + 25x25x2(2)	20x25x2(2) + 25x25x2(2)	20x25x2(2) + 25x25x2(2)	20x25x2(2) + 25x25x2(2)	20x25x2(2) + 25x25x2(2)
Drain Size (NPT)	3/4	3/4	3/4	3/4	3/4	3/4
R-410A Refrigerant Charge (oz.)	184/180	184/180	184/180	184/180	184/180	184/180
Evaporator Coil Face Area (ft^2)	16.6	16.6	16.6	16.6	16.6	16.6
Rows Deep/ Fins per Inch	4/16	4/16	4/16	4/16	4/16	4/16
CONDENSER FAN/COIL						
Quantity of Condenser Fan Motors	2	2	2	2	2	2
RPM (High/Low stage)	1122	1122	1122	1050	1050	1050
Outdoor Horsepower	1/3	1/3	1/3	1/3	1/3	1/3
Fan Diameter/ # Fan Blades	22/3	22/3	22/3	22/3	22/3	22/3
Face Area (ft^2)	39.6	39.6	39.6	39.6	39.6	39.6
Rows Deep / Fins per Inch	2/28±1	2/28±1	2/28±1	2/28±1	2/28±1	2/28±1
COMPRESSOR						
Quantity / Type / Stages	2/SCROLL/1	2/SCROLL/1	2/SCROLL/1	2/SCROLL/1	2/SCROLL/1	2/SCROLL/1
Compressor RLA / LRA	15.9/110	15.9/110	15.9/110	7.1/52.0	7.1/52.0	7.1/52.0
ELECTRICAL DATA						
Voltage-Phase-Frequency	208/230-3-60	208/230-3-60	208/230-3-60	460-3-60	460-3-60	460-3-60
Indoor Blower FLA	14.5	14.5	14.5	10.6	10.6	10.6
Max External Static (In. W.C.)	2	2	2	2	2	2
Outdoor Fan FLA	2	2	2	0.85	0.85	0.85
Min. Circuit Ampacity[1]	54.3/54.3	54.3/54.3	54.3/54.3	28.2	28.2	28.2
Max. Overcurrent Protection (A)[2]	70/70	70/70	70/70	35	35	35
Power Supply Conduit Hole Dia. (in)	1.375	1.375	1.375	1.375	1.375	1.375
Low-VoltageConduit Hole Dia. (in)	0.375	0.375	0.375	0.375	0.375	0.375
OPERATING WEIGHT (LBS.)						
Operating Weight (lbs)	1199	1208	1222	1199	1208	1222
SHIPPING WEIGHT (LBS.)						
Ship Weight (lbs)	1274	1283	1297	1274	1283	1297

[1] Wire size should be determined in accordance with National Electrical Codes. Extensive wire runs will require larger wire sizes.
[2] May use fuses or HACR-type circuit breakers of the same size as noted.
Note: Always check the S&R plate for electrical data on the unit being installed.

Model	DRG1207WL00001	DRG1207WM00001	DRG1207WH00001	DRG1503WL00001	DRG1503WM00001	DRG1503WH00001
COOLING CAPACITY						
Total, BTU/h	115,000	115,000	115,000	137,000	137,000	137,000
IEER / EER	17/12.2	17/12.2	17/12.2	15.5/11.5	15.5/11.5	15.5/11.5
AHRI Reference #	206913017	206913017	206913017	206913019	206913019	206913019
HEATING CAPACITY						
Heat Range	LOW	MEDIUM	HIGH	LOW	MEDIUM	HIGH
No. of Burners	5	6	7	5	6	7
High Stage Input / Output (KBTU/H)	130/105.3	180/145.8	240/194.4	130/105.3	180/145.8	240/194.4
Low Stage Input / Output (KBTU/H)	97.5/79	135/109.35	180/145.8	97.5/79	135/109.35	180/145.8
Thermal Efficiency (T.E.)	81%	81%	81%	81%	81%	81%
Annual Fuel Utilization Efficiency (AFUE)	N/A	N/A	N/A	N/A	N/A	N/A
High Stage Temperature Rise Range (°F)	25 - 55	25 - 55	30 - 60	25 - 55	25 - 55	35 - 65
Low Stage Temperature Rise Range (°F)	25 - 55	25 - 55	30 - 60	25 - 55	25 - 55	35 - 65
EVAPORATOR MOTOR COIL						
Motor Type	DIRECT DRIVE	DIRECT DRIVE	DIRECT DRIVE	DIRECT DRIVE	DIRECT DRIVE	DIRECT DRIVE
External Static Pressure (ESP)	2.0 IN.W.G.	2.0 IN.W.G.	2.0 IN.W.G.	2.0 IN.W.G.	2.0 IN.W.G.	2.0 IN.W.G.
Wheel Dia. X Width	Ø15.12 X 15.00	Ø15.12 X 15.00	Ø15.12 X 15.00	Ø15.12 X 15.00	Ø15.12 X 15.00	Ø15.12 X 15.00
Indoor Nominal CFM	3550	3550	3550	3800	3800	3800
RPM	1300	1300	1300	1300	1300	1300
Indoor Horsepower	5	5	5	5	5	5
Filter Size (in)	20x25x2(2) + 25x25x2(2)	20x25x2(2) + 25x25x2(2)	20x25x2(2) + 25x25x2(2)	25x25x2(4)	25x25x2(4)	25x25x2(4)
Drain Size (NPT)	3/4	3/4	3/4	3/4	3/4	3/4
R-410A Refrigerant Charge (oz.)	184/180	184/180	184/180	190/188	190/188	190/188
Evaporator Coil Face Area (ft^2)	16.6	16.6	16.6	19.1	19.1	19.1
Rows Deep/ Fins per Inch	4/16	4/16	4/16	4/16	4/16	4/16
CONDENSER FAN/COIL						
Quantity of Condenser Fan Motors	2	2	2	2	2	2
RPM (High/Low stage)	1050	1050	1050	1122	1122	1122
Outdoor Horsepower	1/3	1/3	1/3	1/3	1/3	1/3
Fan Diameter/ # Fan Blades	22/3	22/3	22/3	22/3	22/3	22/3
Face Area (ft^2)	39.6	39.6	39.6	43.8	43.8	43.8
Rows Deep / Fins per Inch	2/28±1	2/28±1	2/28±1	2/28±1	2/28±1	2/28±1
COMPRESSOR						
Quantity / Type / Stages	2/SCROLL/1	2/SCROLL/1	2/SCROLL/1	2/SCROLL/1	2/SCROLL/1	2/SCROLL/1
Compressor RLA / LRA	5.1/39.5	5.1/39.5	5.1/39.5	19/123.0	19/123.0	19/123.0
ELECTRICAL DATA						
Voltage-Phase-Frequency	575-3-60	575-3-60	575-3-60	208/230-3-60	208/230-3-60	208/230-3-60
Indoor Blower FLA	7.2	7.2	7.2	14.5	14.5	14.5
Max External Static (In. W.C.)	2	2	2	2	2	2
Outdoor Fan FLA	0.67	0.67	0.67	2	2	2
Min. Circuit Ampacity[1]	20.1	20.1	20.1	64.3/64.3	64.3/64.3	64.3/64.3
Max. Overcurrent Protection (A)[2]	25	25	25	80/80	80/80	80/80
Power Supply Conduit Hole Dia. (in)	1.375	1.375	1.375	1.375	1.375	1.375
Low-VoltageConduit Hole Dia. (in)	0.375	0.375	0.375	0.375	0.375	0.375
OPERATING WEIGHT (LBS.)						
Operating Weight (lbs)	1199	1208	1222	1277	1286	1300
SHIPPING WEIGHT (LBS.)						
Ship Weight (lbs)	1274	1283	1297	1352	1361	1375

[1] Wire size should be determined in accordance with National Electrical Codes. Extensive wire runs will require larger wire sizes.
[2] May use fuses or HACR-type circuit breakers of the same size as noted.
Note: Always check the S&R plate for electrical data on the unit being installed.

Model	DRG1504WL00001	DRG1504WM00001	DRG1504WH00001	DRG1507WL00001	DRG1507WM00001	DRG1507WH00001
COOLING CAPACITY						
Total, BTU/h	137,000	137,000	137,000	137,000	137,000	137,000
IEER / EER	15.5/11.5	15.5/11.5	15.5/11.5	15.5/11.5	15.5/11.5	15.5/11.5
AHRI Reference #	206913019	206913019	206913019	206913019	206913019	206913019
HEATING CAPACITY						
Heat Range	LOW	MEDIUM	HIGH	LOW	MEDIUM	HIGH
No. of Burners	5	6	7	5	6	7
High Stage Input / Output (KBTU/H)	130/105.3	180/145.8	240/194.4	130/105.3	180/145.8	240/194.4
Low Stage Input / Output (KBTU/H)	97.5/79	135/109.35	180/145.8	97.5/79	135/109.35	180/145.8
Thermal Efficiency (T.E.)	81%	81%	81%	81%	81%	81%
Annual Fuel Utilization Efficiency (AFUE)	N/A	N/A	N/A	N/A	N/A	N/A
High Stage Temperature Rise Range (°F)	25 - 55	25 - 55	35 - 65	25 - 55	25 - 55	35 - 65
Low Stage Temperature Rise Range (°F)	25 - 55	25 - 55	35 - 65	25 - 55	25 - 55	35 - 65
EVAPORATOR MOTOR COIL						
Motor Type	DIRECT DRIVE	DIRECT DRIVE	DIRECT DRIVE	DIRECT DRIVE	DIRECT DRIVE	DIRECT DRIVE
External Static Pressure (ESP)	2.0 IN.W.G.	2.0 IN.W.G.	2.0 IN.W.G.	2.0 IN.W.G.	2.0 IN.W.G.	2.0 IN.W.G.
Wheel Dia. X Width	Ø15.12 X 15.00	Ø15.12 X 15.00	Ø15.12 X 15.00	Ø15.12 X 15.00	Ø15.12 X 15.00	Ø15.12 X 15.00
Indoor Nominal CFM	3800	3800	3800	3800	3800	3800
RPM	1300	1300	1300	1300	1300	1300
Indoor Horsepower	5	5	5	5	5	5
Filter Size (in)	25x25x2(4)	25x25x2(4)	25x25x2(4)	25x25x2(4)	25x25x2(4)	25x25x2(4)
Drain Size (NPT)	3/4	3/4	3/4	3/4	3/4	3/4
R-410A Refrigerant Charge (oz.)	190/188	190/188	190/188	190/188	190/188	190/188
Evaporator Coil Face Area (ft^2)	19.1	19.1	19.1	19.1	19.1	19.1
Rows Deep/ Fins per Inch	4/16	4/16	4/16	4/16	4/16	4/16
CONDENSER FAN/COIL						
Quantity of Condenser Fan Motors	2	2	2	2	2	2
RPM (High/Low stage)	1050	1050	1050	1050	1050	1050
Outdoor Horsepower	1/3	1/3	1/3	1/3	1/3	1/3
Fan Diameter/ # Fan Blades	22/3	22/3	22/3	22/3	22/3	22/3
Face Area (ft^2)	43.8	43.8	43.8	43.8	43.8	43.8
Rows Deep / Fins per Inch	2/28±1	2/28±1	2/28±1	2/28±1	2/28±1	2/28±1
COMPRESSOR						
Quantity / Type / Stages	2/SCROLL/1	2/SCROLL/1	2/SCROLL/1	2/SCROLL/1	2/SCROLL/1	2/SCROLL/1
Compressor RLA / LRA	9.7/62.0	9.7/62.0	9.7/62.0	7.4/50.0	7.4/50.0	7.4/50.0
ELECTRICAL DATA						
Voltage-Phase-Frequency	460-3-60	460-3-60	460-3-60	575-3-60	575-3-60	575-3-60
Indoor Blower FLA	10.6	10.6	10.6	7.2	7.2	7.2
Max External Static (In. W.C.)	2	2	2	2	2	2
Outdoor Fan FLA	0.85	0.85	0.85	0.67	0.67	0.67
Min. Circuit Ampacity[1]	35.7	35.7	35.7	30.9	30.9	30.9
Max. Overcurrent Protection (A)[2]	45	45	45	35	35	35
Power Supply Conduit Hole Dia. (in)	1.375	1.375	1.375	1.375	1.375	1.375
Low-VoltageConduit Hole Dia. (in)	0.375	0.375	0.375	0.375	0.375	0.375
OPERATING WEIGHT (LBS.)						
Operating Weight (lbs)	1277	1286	1300	1277	1286	1300
SHIPPING WEIGHT (LBS.)						
Ship Weight (lbs)	1352	1361	1375	1352	1361	1375

[1] Wire size should be determined in accordance with National Electrical Codes. Extensive wire runs will require larger wire sizes.
[2] May use fuses or HACR-type circuit breakers of the same size as noted.
Note: Always check the S&R plate for electrical data on the unit being installed.

Coil Dimensions

Model	Tons	Fin height in.	Fin length in.
DRG	7.5	34.6	53.1
	8.5	45.0	53.1
	10	45.0	53.1
	12.5	52.0	53.1

AHRI Ratings

MODEL	CAPACITY	EER	IEER
DRG090	90,000	12.2	16
DRG102	102,000	12.2	17
DRG120	115,000	12.2	17
DRG150	137,000	11.5	15.5

Sound Data

Model	Outdoor sound (dB) at 60 Hz								
	A-Weighted	63	125	250	500	1000	2000	4000	8000
090	82.9	91.5	84.1	82	79.7	77.6	75.2	71.7	69
102	80.2	89.1	81.1	78.7	77.1	76.1	70.8	66.5	64.1
120	81.8	91.9	82.8	81.9	79.1	76.9	72.9	68.3	66
150	80.5	90.9	84.2	78.5	77.6	75.9	71.3	67.7	64.7

Notes:

[1] Outdoor sound data is measured in accordance with AHRI standard 270.

[2] Measurements are expressed in terms of sound power. Do not compare these values to sound pressure values because sound pressure depends on specific environment factors which normally do not match individual applications. Sound power values are independent of the environment and therefore more accurate.

[3] A-weighted sound ratings filter out high and very low frequencies, to better approximate the response of "average" human ear. A-weighted measurements for Daikin units are taken in accordance with AHRI standard 270.

			Outdoor Ambient Temperature																							
			65				75				85				95				105				115			
			Entering Indoor Wet Bulb Temperature																							
IDB	Airflow	ID WB	59	63	67	71	59	63	67	71	59	63	67	71	59	63	67	71	59	63	67	71	59	63	67	71
70	2625	MBh	91.6	92.9	95.6	98.6	90.7	92.0	94.8	97.8	88.4	89.6	92.4	95.4	84.2	85.5	88.3	91.3	79.2	80.5	83.2	86.2	74.6	75.9	78.7	81.7
		S/T	0.59	0.52	0.38	0.28	0.60	0.52	0.39	0.28	0.62	0.55	0.41	0.31	1.00	0.57	0.43	0.33	1.00	0.59	0.46	0.35	1.00	0.64	0.51	0.40
		ΔT	19.52	17.72	14.35	11.7	19.47	17.67	14.30	11.6	19.73	17.92	14.55	11.9	19.46	17.65	14.28	11.6	19.21	17.41	14.04	11.4	20.34	18.54	15.17	12.5
		kW	5.41	5.41	5.40	5.4	6.02	6.01	6.00	6.0	6.69	6.68	6.67	6.7	7.42	7.41	7.40	7.4	8.23	8.22	8.21	8.2	9.18	9.18	9.17	9.2
		Amps	20.47	20.44	20.40	20.5	23.22	23.20	23.15	23.3	26.30	26.28	26.23	26.3	29.63	29.61	29.56	29.7	33.35	33.33	33.28	33.4	37.71	37.69	37.64	37.8
		Hi PR	239	240	242	244.7	277	278	280	282.5	316	318	319	322.0	359	360	362	364.6	405	406	408	410.5	454	455	457	459.5
		Lo PR	127	128	132	135.5	135	136	139	143.2	141	143	146	149.9	147	149	152	155.7	153	154	157	161.3	160	161	164	168.3
	3000	MBh	92.8	94.1	96.8	99.8	91.9	93.2	96.0	99.0	89.6	90.9	93.6	96.6	85.4	86.7	89.5	92.5	80.4	81.7	84.4	87.4	75.8	77.1	79.9	82.9
		S/T	0.65	0.57	0.44	0.3	0.66	0.58	0.45	0.3	1.00	0.61	0.47	0.4	1.00	0.62	0.49	0.4	1.00	0.65	0.51	0.4	1.00	0.70	0.56	0.5
		ΔT	18.43	16.63	13.26	10.6	18.38	16.58	13.21	10.5	18.64	16.83	13.46	10.8	18.36	16.56	13.19	10.5	18.12	16.32	12.95	10.3	19.25	17.45	14.08	11.4
		kW	5.45	5.44	5.43	5.5	6.05	6.04	6.03	6.1	6.72	6.71	6.70	6.7	7.45	7.44	7.43	7.5	8.26	8.26	8.24	8.3	9.21	9.21	9.20	9.2
		Amps	20.61	20.59	20.54	20.7	23.37	23.34	23.30	23.4	26.44	26.42	26.37	26.5	29.77	29.75	29.70	29.8	33.49	33.47	33.42	33.5	37.86	37.84	37.79	37.9
		Hi PR	241	242	244	246.7	279	280	282	284.5	319	320	321	324.0	361	362	364	366.6	407	408	410	412.5	456	457	459	461.5
		Lo PR	129	130	134	137.3	136	138	141	145.0	143	145	148	151.8	149	150	154	157.5	155	156	159	163.1	162	163	166	170.2
	3375	MBh	94.2	95.5	98.2	101.2	93.4	94.7	97.4	100.4	91.0	92.3	95.0	98.0	86.9	88.2	90.9	93.9	81.9	83.2	85.9	88.9	77.3	78.6	81.3	84.3
		S/T	0.68	0.61	0.48	0.4	0.69	0.61	0.48	0.4	1.00	0.64	0.51	0.4	1.00	0.66	0.53	0.4	1.00	0.68	0.55	0.4	1.00	1.00	0.60	0.5
		ΔT	17.51	15.71	12.34	9.7	17.46	15.66	12.29	9.6	17.72	15.91	12.54	9.9	17.45	15.64	12.27	9.6	17.21	15.40	12.03	9.3	18.34	16.53	13.16	10.5
		kW	5.47	5.47	5.46	5.5	6.07	6.07	6.06	6.1	6.75	6.74	6.73	6.8	7.47	7.47	7.46	7.5	8.29	8.28	8.27	8.3	9.24	9.24	9.22	9.3
		Amps	20.73	20.71	20.66	20.8	23.49	23.46	23.42	23.5	26.56	26.54	26.49	26.6	29.89	29.87	29.82	29.9	33.61	33.59	33.54	33.7	37.98	37.95	37.91	38.0
		Hi PR	243	244	246	248.7	281	282	284	286.5	320	322	323	326.0	363	364	366	368.6	409	410	412	414.5	458	459	461	463.5
		Lo PR	131	132	136	139.4	138	140	143	147.1	145	147	150	153.9	151	153	156	159.6	157	158	161	165.2	164	165	168	172.2
75	2625	MBh	91.6	92.9	95.6	99.8	90.8	92.1	94.8	99.0	88.4	89.7	92.4	96.6	84.3	85.6	88.3	92.5	79.3	80.6	83.3	87.5	74.7	76.0	78.7	82.9
		S/T	0.72	0.64	0.51	0.4	1.00	0.65	0.52	0.4	1.00	0.67	0.54	0.4	1.00	0.69	0.56	0.4	1.00	0.71	0.58	0.4	1.00	1.00	0.63	0.5
		ΔT	23.49	21.69	18.32	14.8	23.44	21.64	18.27	14.8	23.70	21.89	18.52	15.0	23.43	21.62	18.25	14.8	23.18	21.38	18.01	14.5	24.31	22.51	19.14	15.6
		kW	5.41	5.41	5.39	5.4	6.01	6.01	6.00	6.0	6.68	6.68	6.67	6.7	7.41	7.41	7.40	7.4	8.22	8.22	8.21	8.3	9.18	9.17	9.16	9.2
		Amps	20.45	20.43	20.38	20.6	23.20	23.18	23.14	23.3	26.28	26.26	26.21	26.4	29.61	29.59	29.54	29.8	33.33	33.31	33.26	33.5	37.70	37.67	37.63	37.8
		Hi PR	239	240	242	246.3	277	278	280	284.0	317	318	319	323.6	359	360	362	366.2	405	406	408	412.1	454	455	457	461.1
		Lo PR	127	128	132	137.1	135	136	139	144.8	141	143	146	151.6	147	149	152	157.3	153	154	157	162.9	160	161	164	169.9
	3000	MBh	92.8	94.1	96.8	101.0	92.0	93.3	96.0	100.2	89.6	90.9	93.6	97.8	85.5	**86.8**	89.5	93.7	80.5	81.8	84.5	88.7	75.9	77.2	79.9	84.1
		S/T	0.77	0.70	0.57	0.4	1.00	0.71	0.57	0.4	1.00	0.73	0.60	0.5	1.00	**0.75**	0.62	0.5	1.00	1.00	0.64	0.5	1.00	1.00	0.69	0.6
		ΔT	22.40	20.60	17.23	13.7	22.35	20.55	17.18	13.7	22.61	20.80	17.43	13.9	22.33	**20.53**	17.16	13.7	22.09	20.29	16.92	13.4	23.22	21.42	18.05	14.6
		kW	5.44	5.44	5.43	5.5	6.04	6.04	6.03	6.1	6.72	6.71	6.70	6.7	7.44	**7.44**	7.43	7.5	8.26	8.25	8.24	8.3	9.21	9.21	9.19	9.2
		Amps	20.59	20.57	20.52	20.7	23.35	23.33	23.28	23.5	26.42	26.40	26.36	26.6	29.75	**29.73**	29.69	29.9	33.47	33.45	33.41	33.6	37.84	37.82	37.77	38.0
		Hi PR	241	242	244	248.3	279	280	282	286.1	319	320	321	325.6	361	**362**	364	368.2	407	408	410	414.1	456	457	459	463.1
		Lo PR	129	130	134	138.9	136	138	141	146.7	143	145	148	153.4	149	**151**	154	159.1	155	156	159	164.7	162	163	166	171.8
	3375	MBh	94.3	95.6	98.3	102.5	93.4	94.7	97.5	101.7	91.1	92.3	95.1	99.3	86.9	88.2	91.0	95.1	81.9	83.2	85.9	90.1	77.3	78.6	81.4	85.5
		S/T	0.81	0.73	0.60	0.5	1.00	0.74	0.61	0.5	1.00	0.76	0.63	0.5	1.00	0.78	0.65	0.5	1.00	1.00	0.67	0.5	1.00	1.00	0.72	0.6
		ΔT	21.48	19.68	16.31	12.8	21.43	19.63	16.26	12.8	21.69	19.88	16.51	13.0	21.42	19.61	16.24	12.7	21.17	19.37	16.00	12.5	22.31	20.50	17.13	13.6
		kW	5.47	5.46	5.45	5.5	6.07	6.06	6.05	6.1	6.74	6.74	6.73	6.8	7.47	7.46	7.45	7.5	8.28	8.28	8.27	8.3	9.24	9.23	9.22	9.3
		Amps	20.71	20.69	20.64	20.9	23.47	23.45	23.40	23.6	26.54	26.52	26.48	26.7	29.87	29.85	29.81	30.0	33.59	33.57	33.53	33.7	37.96	37.94	37.89	38.1
		Hi PR	243	244	246	250.3	281	282	284	288.0	321	322	323	327.6	363	364	366	370.2	409	410	412	416.1	458	459	461	465.1
		Lo PR	131	132	136	141.0	139	140	143	148.7	145	147	150	155.5	151	153	156	161.2	157	158	161	166.8	164	165	168	173.8

IDB: Entering Indoor Dry Bulb Temperature

Shaded area reflects ACCA (TVA) conditions

kW = Total system power

High and low pressures are measured at the liquid and suction access fittings.

Amps: Unit amps (comp.+ evaporator + condenser fan motors)

Design Subcooling, 16 - 19 °F @ the liquid access fitting connection ARI 95 test conditions. Design Superheat 8 - 12°F @ the compressor suction access fitting connection.

			Outdoor Ambient Temperature																							
			65				75				85				95				105				115			
			Entering Indoor Wet Bulb Temperature																							
IDB	Airflow	ID WB	59	63	67	71	59	63	67	71	59	63	67	71	59	63	67	71	59	63	67	71	59	63	67	71
80	2625	MBh	92.1	93.4	96.1	100.3	91.3	92.6	95.3	99.5	88.9	90.2	92.9	97.1	84.8	86.1	88.8	93.0	79.7	81.0	83.8	87.9	75.2	76.4	79.2	83.4
		S/T	1.00	0.76	0.63	0.5	1.00	0.77	0.64	0.5	1.00	0.79	0.66	0.5	1.00	1.00	0.68	0.5	1.00	1.00	0.70	0.6	1.00	1.00	0.75	0.6
		ΔT	27.49	25.68	22.31	18.8	27.44	25.64	22.26	18.8	27.69	25.89	22.52	19.0	27.42	25.62	22.25	18.8	27.18	25.38	22.00	18.5	28.31	26.51	23.13	19.6
		kW	5.41	5.41	5.40	5.4	6.02	6.01	6.00	6.0	6.69	6.68	6.67	6.7	7.42	7.41	7.40	7.4	8.23	8.22	8.21	8.3	9.18	9.18	9.17	9.2
		Amps	20.46	20.44	20.39	20.6	23.22	23.20	23.15	23.4	26.30	26.27	26.23	26.4	29.63	29.60	29.56	29.8	33.35	33.32	33.28	33.5	37.71	37.69	37.64	37.9
		Hi PR	240	241	243	246.7	278	279	280	284.5	317	318	320	324.0	360	361	362	366.6	406	407	408	412.5	455	456	457	461.5
		Lo PR	127	129	132	137.6	135	137	140	145.4	142	143	147	152.1	148	149	152	157.8	153	155	158	163.4	160	162	165	170.5
	3000	MBh	93.3	94.6	97.3	101.5	92.5	93.8	96.5	100.7	90.1	91.4	94.1	98.3	86.0	87.3	**90.0**	94.2	80.9	82.2	85.0	89.2	76.4	77.6	80.4	84.6
		S/T	1.00	0.82	0.69	0.6	1.00	0.83	0.70	0.6	1.00	1.00	0.72	0.6	1.00	1.00	**0.74**	0.6	1.00	1.00	0.76	0.6	1.00	1.00	0.81	0.7
		ΔT	26.40	24.59	21.22	17.7	26.35	24.54	21.17	17.7	26.60	24.80	21.43	17.9	26.33	24.53	**21.15**	17.7	26.09	24.28	20.91	17.4	27.22	25.41	22.04	18.6
		kW	5.44	5.44	5.43	5.5	6.05	6.04	6.03	6.1	6.72	6.71	6.70	6.7	7.45	7.44	**7.43**	7.5	8.26	8.25	8.24	8.3	9.21	9.21	9.20	9.2
		Amps	20.61	20.58	20.54	20.7	23.36	23.34	23.29	23.5	26.44	26.42	26.37	26.6	29.77	29.75	**29.70**	29.9	33.49	33.47	33.42	33.6	37.85	37.83	37.78	38.0
		Hi PR	242	243	245	248.8	280	281	282	286.5	319	320	322	326.1	362	363	**364**	368.6	408	409	410	414.5	457	458	459	463.5
		Lo PR	129	131	134	139.5	137	139	142	147.2	144	145	149	154.0	149	151	**154**	159.7	155	157	160	165.3	162	164	167	172.3
	3375	MBh	94.7	96.0	98.8	102.9	93.9	95.2	97.9	102.1	91.5	92.8	95.6	99.7	87.4	88.7	91.4	95.6	82.4	83.7	86.4	90.6	77.8	79.1	81.8	86.0
		S/T	1.00	0.86	0.72	0.6	1.00	0.86	0.73	0.6	1.00	1.00	0.75	0.6	1.00	1.00	0.77	0.6	1.00	1.00	0.79	0.7	1.00	1.00	1.00	0.7
		ΔT	25.48	23.68	20.30	16.8	25.43	23.63	20.25	16.8	25.69	23.88	20.51	17.0	25.41	23.61	20.24	16.7	25.17	23.37	20.00	16.5	26.30	24.50	21.13	17.6
		kW	5.47	5.47	5.46	5.5	6.07	6.07	6.06	6.1	6.75	6.74	6.73	6.8	7.47	7.47	7.46	7.5	8.29	8.28	8.27	8.3	9.24	9.23	9.22	9.3
		Amps	20.73	20.70	20.66	20.9	23.48	23.46	23.41	23.6	26.56	26.54	26.49	26.7	29.89	29.87	29.82	30.0	33.61	33.59	33.54	33.8	37.97	37.95	37.90	38.1
		Hi PR	244	245	247	250.7	282	283	284	288.5	321	322	324	328.0	364	365	366	370.6	410	411	412	416.5	459	460	461	465.5
		Lo PR	131	133	136	141.6	139	141	144	149.3	146	147	151	156.0	152	153	156	161.8	157	159	162	167.4	164	166	169	174.4
85	2625	MBh	93.6	94.9	97.7	101.8	92.8	94.1	96.8	101.0	90.4	91.7	94.5	98.6	86.3	87.6	90.3	94.5	81.3	82.6	85.3	89.5	76.7	78.0	80.7	84.9
		S/T	1.00	0.86	0.73	0.6	1.00	1.00	0.74	0.6	1.00	1.00	0.76	0.6	1.00	1.00	0.78	0.6	1.00	1.00	1.00	0.7	1.00	1.00	1.00	0.7
		ΔT	31.03	29.23	25.86	22.4	30.99	29.18	25.81	22.3	31.24	29.43	26.06	22.6	30.97	29.16	25.79	22.3	30.73	28.92	25.55	22.1	31.86	30.05	26.68	23.2
		kW	5.42	5.42	5.41	5.5	6.03	6.02	6.01	6.1	6.70	6.69	6.68	6.7	7.43	7.42	7.41	7.5	8.24	8.23	8.22	8.3	9.19	9.19	9.18	9.2
		Amps	20.52	20.49	20.45	20.7	23.27	23.25	23.20	23.4	26.35	26.33	26.28	26.5	29.68	29.66	29.61	29.8	33.40	33.38	33.33	33.5	37.76	37.74	37.69	37.9
		Hi PR	241	242	244	247.9	279	280	281	285.6	318	319	321	325.1	361	362	364	367.7	407	408	409	413.6	456	457	458	462.6
		Lo PR	129	131	134	139.5	137	139	142	147.3	144	145	149	154.0	150	151	154	159.7	155	157	160	165.3	162	164	167	172.4
	3000	MBh	94.8	96.1	98.9	103.0	94.0	95.3	98.0	102.2	91.6	92.9	95.7	99.8	87.5	88.8	91.5	95.7	82.5	83.8	86.5	90.7	77.9	79.2	81.9	86.1
		S/T	1.00	0.92	0.79	0.7	1.00	1.00	0.80	0.7	1.00	1.00	0.82	0.7	1.00	1.00	0.84	0.7	1.00	1.00	1.00	0.7	1.00	1.00	1.00	0.8
		ΔT	29.94	28.14	24.77	21.3	29.89	28.09	24.72	21.2	30.15	28.34	24.97	21.5	29.88	28.07	24.70	21.2	29.63	27.83	24.46	21.0	30.77	28.96	25.59	22.1
		kW	5.46	5.45	5.44	5.5	6.06	6.05	6.04	6.1	6.73	6.73	6.72	6.8	7.46	7.45	7.44	7.5	8.27	8.27	8.26	8.3	9.22	9.22	9.21	9.3
		Amps	20.66	20.64	20.59	20.8	23.41	23.39	23.35	23.6	26.49	26.47	26.42	26.6	29.82	29.80	29.75	30.0	33.54	33.52	33.47	33.7	37.91	37.88	37.84	38.0
		Hi PR	243	244	246	249.9	281	282	283	287.6	320	321	323	327.2	363	364	366	369.8	409	410	411	415.7	458	459	460	464.7
		Lo PR	131	133	136	141.4	139	140	144	149.1	146	147	150	155.9	151	153	156	161.6	157	159	162	167.2	164	166	169	174.2
	3375	MBh	96.3	97.6	100.3	104.5	95.5	96.8	99.5	103.7	93.1	94.4	97.1	101.3	89.0	90.3	93.0	97.2	83.9	85.2	88.0	92.1	79.3	80.6	83.4	87.5
		S/T	1.00	0.95	0.82	0.7	1.00	1.00	0.83	0.7	1.00	1.00	0.85	0.7	1.00	1.00	0.87	0.7	1.00	1.00	1.00	0.8	1.00	1.00	1.00	0.8
		ΔT	29.03	27.22	23.85	20.4	28.98	27.17	23.80	20.3	29.23	27.42	24.05	20.6	28.96	27.15	23.78	20.3	28.72	26.91	23.54	20.0	29.85	28.04	24.67	21.2
		kW	5.48	5.48	5.47	5.5	6.08	6.08	6.07	6.1	6.76	6.75	6.74	6.8	7.48	7.48	7.47	7.5	8.30	8.29	8.28	8.3	9.25	9.25	9.24	9.3
		Amps	20.78	20.76	20.71	20.9	23.53	23.51	23.47	23.7	26.61	26.59	26.54	26.8	29.94	29.92	29.87	30.1	33.66	33.64	33.59	33.8	38.03	38.00	37.96	38.2
		Hi PR	245	246	248	251.9	283	284	285	289.6	322	323	325	329.2	365	366	368	371.7	411	412	413	417.6	460	461	462	466.6
		Lo PR	133	135	138	143.5	141	143	146	151.2	148	149	153	157.9	153	155	158	163.7	159	161	164	169.3	166	168	171	176.3

IDB: Entering Indoor Dry Bulb Temperature

Shaded area reflects ACCA (TVA) conditions

kW = Total system power

High and low pressures are measured at the liquid and suction access fittings.

Amps: Unit amps (comp.+ evaporator + condenser fan motors)

Design Subcooling, 16 - 19 °F @ the liquid access fitting connection ARI 95 test conditions. Design Superheat 8 - 12°F @ the compressor suction access fitting connection.

			Outdoor Ambient Temperature																							
			65				75				85				95				105				115			
			Entering Indoor Wet Bulb Temperature																							
IDB	Airflow	ID WB	59	63	67	71	59	63	67	71	59	63	67	71	59	63	67	71	59	63	67	71	59	63	67	71
70	2625	MBh	105.1	106.6	109.7	113.1	104.2	105.7	108.8	112.2	101.5	103.0	106.1	109.5	96.8	98.3	101.4	104.8	91.1	92.6	95.7	95.7	85.9	87.4	90.5	93.9
		S/T	0.62	0.55	0.42	0.32	0.63	0.56	0.43	0.33	0.65	0.58	0.45	0.35	1.00	0.60	0.47	0.37	1.00	0.62	0.49	0.49	1.00	0.67	0.54	0.44
		ΔT	19.06	17.20	13.71	10.9	19.01	17.14	13.66	10.9	19.27	17.41	13.92	11.1	18.99	17.13	13.64	10.9	18.74	16.88	13.39	13.4	19.91	18.04	14.56	11.8
		kW	6.04	6.04	6.02	6.1	6.77	6.76	6.75	6.8	7.57	7.57	7.55	7.6	8.44	8.44	8.43	8.5	9.42	9.41	9.40	9.4	10.56	10.56	10.55	10.6
		Amps	23.99	23.97	23.91	24.1	27.30	27.28	27.22	27.4	30.99	30.97	30.91	31.1	34.99	34.96	34.91	35.0	39.45	39.42	39.37	39.4	44.69	44.66	44.60	44.7
		Hi PR	253	254	256	259.0	293	294	296	298.6	334	335	337	340.1	379	380	382	384.8	427	428	430	430.1	479	480	482	484.5
		Lo PR	125	126	129	133.1	132	134	137	140.6	139	140	143	147.1	144	146	149	152.7	150	151	154	154.4	157	158	161	164.9
	3000	MBh	106.4	107.8	110.9	114.3	105.4	106.9	110.0	113.4	102.7	104.2	107.3	110.7	98.1	99.5	102.6	106.0	92.4	93.8	96.9	96.9	87.2	88.6	91.7	95.1
		S/T	0.65	0.58	0.45	0.3	0.66	0.58	0.46	0.4	0.68	0.61	0.48	0.4	1.00	0.63	0.50	0.4	1.00	0.65	0.52	0.5	1.00	0.69	0.57	0.5
		ΔT	18.32	16.45	12.96	10.2	18.26	16.40	12.91	10.1	18.53	16.66	13.17	10.4	18.25	16.38	12.89	10.1	18.00	16.13	12.64	12.6	19.17	17.30	13.81	11.0
		kW	6.07	6.06	6.05	6.1	6.79	6.78	6.77	6.8	7.60	7.59	7.58	7.6	8.47	8.46	8.45	8.5	9.44	9.44	9.43	9.4	10.59	10.58	10.57	10.6
		Amps	24.11	24.08	24.03	24.2	27.41	27.39	27.33	27.5	31.11	31.08	31.02	31.2	35.10	35.07	35.02	35.2	39.56	39.54	39.48	39.5	44.80	44.77	44.72	44.9
		Hi PR	255	256	258	260.6	294	296	297	300.2	336	337	339	341.7	381	382	384	386.4	429	430	432	431.7	480	481	483	486.1
		Lo PR	126	128	131	134.6	134	135	138	142.1	140	142	145	148.7	146	147	151	154.2	151	153	156	155.9	158	160	163	166.5
	3375	MBh	108.5	109.9	113.0	116.4	107.5	109.0	112.1	115.5	104.8	106.3	109.4	112.8	100.2	101.6	104.7	108.1	94.5	95.9	99.0	99.0	89.3	90.7	93.8	97.2
		S/T	0.66	0.59	0.47	0.4	0.67	0.60	0.47	0.4	0.69	0.62	0.50	0.4	1.00	0.64	0.51	0.4	1.00	0.66	0.53	0.5	1.00	0.71	0.58	0.5
		ΔT	17.38	15.51	12.02	9.2	17.32	15.46	11.97	9.2	17.59	15.72	12.23	9.5	17.31	15.44	11.95	9.2	17.06	15.19	11.70	11.7	18.22	16.36	12.87	10.1
		kW	6.10	6.09	6.08	6.1	6.82	6.82	6.80	6.8	7.63	7.62	7.61	7.6	8.50	8.49	8.48	8.5	9.48	9.47	9.46	9.5	10.62	10.61	10.60	10.6
		Amps	24.25	24.22	24.17	24.3	27.56	27.53	27.47	27.6	31.25	31.22	31.17	31.3	35.24	35.22	35.16	35.3	39.71	39.68	39.62	39.6	44.94	44.92	44.86	45.0
		Hi PR	257	258	260	262.9	297	298	300	302.5	338	339	341	344.1	383	384	386	388.7	431	432	434	434.0	483	484	485	488.4
		Lo PR	129	130	133	137.1	136	138	141	144.6	143	144	147	151.1	148	150	153	156.7	154	155	158	158.4	161	162	165	168.9
75	2625	MBh	105.2	106.7	109.8	114.5	104.3	105.7	108.8	113.6	101.6	103.0	106.1	110.9	96.9	98.4	101.5	106.2	91.2	92.7	95.8	100.5	86.0	87.5	90.6	95.3
		S/T	0.74	0.67	0.55	0.4	0.75	0.68	0.55	0.4	1.00	0.70	0.57	0.4	1.00	0.72	0.59	0.5	1.00	0.74	0.61	0.5	1.00	1.00	0.66	0.5
		ΔT	23.17	21.30	17.81	14.2	23.12	21.25	17.76	14.2	23.38	21.51	18.03	14.4	23.10	21.23	17.74	14.1	22.85	20.98	17.49	13.9	24.02	22.15	18.66	15.1
		kW	6.04	6.03	6.02	6.1	6.76	6.75	6.74	6.8	7.57	7.56	7.55	7.6	8.44	8.43	8.42	8.5	9.42	9.41	9.40	9.5	10.56	10.55	10.54	10.6
		Amps	23.97	23.95	23.89	24.1	27.28	27.25	27.20	27.5	30.97	30.95	30.89	31.1	34.97	34.94	34.88	35.1	39.43	39.40	39.35	39.6	44.67	44.64	44.58	44.8
		Hi PR	253	255	256	260.7	293	294	296	300.3	335	336	337	341.8	379	380	382	386.5	427	429	430	434.7	479	480	482	486.1
		Lo PR	125	126	129	134.7	132	134	137	142.2	139	140	143	148.7	144	146	149	154.2	150	151	154	159.7	157	158	161	166.5
	3000	MBh	106.4	107.9	111.0	115.7	105.5	107.0	110.1	114.8	102.8	104.3	107.4	112.1	98.1	**99.6**	102.7	107.4	92.4	93.9	97.0	101.7	87.2	88.7	91.8	96.5
		S/T	0.77	0.70	0.57	0.4	1.00	0.70	0.58	0.4	1.00	0.73	0.60	0.5	1.00	**0.75**	0.62	0.5	1.00	0.77	0.64	0.5	1.00	1.00	0.69	0.6
		ΔT	22.42	20.55	17.07	13.5	22.37	20.50	17.02	13.4	22.63	20.77	17.28	13.7	22.35	**20.48**	17.00	13.4	22.10	20.23	16.75	13.1	23.27	21.40	17.92	14.3
		kW	6.06	6.06	6.04	6.1	6.79	6.78	6.77	6.8	7.59	7.59	7.57	7.6	8.46	**8.46**	8.45	8.5	9.44	9.43	9.42	9.5	10.58	10.58	10.57	10.6
		Amps	24.09	24.06	24.00	24.3	27.39	27.37	27.31	27.6	31.08	31.06	31.00	31.3	35.08	**35.05**	35.00	35.2	39.54	39.52	39.46	39.7	44.78	44.75	44.70	44.9
		Hi PR	255	256	258	262.3	295	296	298	301.9	336	337	339	343.4	381	**382**	384	388.1	429	430	432	436.3	480	482	483	487.7
		Lo PR	126	128	131	136.2	134	135	138	143.7	140	142	145	150.2	146	**147**	151	155.8	151	153	156	161.2	158	160	163	168.0
	3375	MBh	108.5	110.0	113.1	117.8	107.6	109.1	112.2	116.9	104.9	106.4	109.5	114.2	100.2	101.7	104.8	109.5	94.5	96.0	99.1	103.8	89.3	90.8	93.9	98.6
		S/T	0.79	0.71	0.59	0.5	1.00	0.72	0.59	0.5	1.00	0.74	0.62	0.5	1.00	0.76	0.63	0.5	1.00	1.00	0.66	0.5	1.00	1.00	0.70	0.6
		ΔT	21.48	19.61	16.13	12.5	21.43	19.56	16.08	12.5	21.69	19.82	16.34	12.7	21.41	19.54	16.06	12.4	21.16	19.29	15.81	12.2	22.33	20.46	16.98	13.4
		kW	6.09	6.09	6.08	6.1	6.82	6.81	6.80	6.9	7.62	7.62	7.60	7.7	8.50	8.49	8.48	8.5	9.47	9.47	9.45	9.5	10.62	10.61	10.60	10.7
		Amps	24.23	24.20	24.15	24.4	27.53	27.51	27.45	27.7	31.23	31.20	31.14	31.4	35.22	35.20	35.14	35.4	39.68	39.66	39.60	39.9	44.92	44.89	44.84	45.1
		Hi PR	257	258	260	264.6	297	298	300	304.2	338	340	341	345.7	383	384	386	390.4	431	432	434	438.6	483	484	486	490.0
		Lo PR	129	130	133	138.6	136	138	141	146.1	143	144	147	152.7	148	150	153	158.2	154	155	158	163.6	161	162	165	170.5

IDB: Entering Indoor Dry Bulb Temperature

Shaded area reflects ACCA (TVA) conditions

kW = Total system power

High and low pressures are measured at the liquid and suction access fittings.

Amps: Unit amps (comp.+ evaporator + condenser fan motors)

Design Subcooling, 16 - 19 °F @ the liquid access fitting connection ARI 95 test conditions. Design Superheat 8 - 12°F @ the compressor suction access fitting connection.

			Outdoor Ambient Temperature																							
			65				75				85				95				105				115			
			Entering Indoor Wet Bulb Temperature																							
IDB	Airflow	ID WB	59	63	67	71	59	63	67	71	59	63	67	71	59	63	67	71	59	63	67	71	59	63	67	71
80	2625	MBh	105.7	107.2	110.3	115.0	104.8	106.3	109.4	114.1	102.1	103.6	106.7	111.4	97.4	98.9	102.0	106.7	91.7	93.2	96.3	101.0	86.5	88.0	91.1	95.8
		S/T	1.00	0.79	0.66	0.5	1.00	0.80	0.67	0.5	1.00	0.82	0.69	0.6	1.00	1.00	0.71	0.6	1.00	1.00	0.73	0.6	1.00	1.00	0.78	0.6
		ΔT	27.30	25.43	21.95	18.3	27.25	25.38	21.90	18.3	27.51	25.65	22.16	18.5	27.23	25.36	21.88	18.3	26.98	25.11	21.63	18.0	28.15	26.28	22.80	19.2
		kW	6.04	6.04	6.02	6.1	6.76	6.76	6.75	6.8	7.57	7.57	7.55	7.6	8.44	8.44	8.43	8.5	9.42	9.41	9.40	9.5	10.56	10.56	10.55	10.6
		Amps	23.99	23.96	23.91	24.2	27.30	27.27	27.21	27.5	30.99	30.96	30.91	31.2	34.98	34.96	34.90	35.2	39.45	39.42	39.36	39.6	44.68	44.66	44.60	44.9
		Hi PR	254	255	257	261.1	294	295	296	300.8	335	336	338	342.3	380	381	383	387.0	428	429	431	435.2	479	480	482	486.6
		Lo PR	125	127	130	135.2	133	134	137	142.7	139	141	144	149.2	145	146	150	154.8	150	152	155	160.2	157	159	162	167.0
	3000	MBh	107.0	108.4	111.5	116.3	106.0	107.5	110.6	115.3	103.3	104.8	107.9	112.6	98.7	100.1	**103.2**	108.0	93.0	94.4	97.5	102.3	87.8	89.2	92.3	97.1
		S/T	1.00	0.82	0.69	0.6	1.00	0.82	0.70	0.6	1.00	0.85	0.72	0.6	1.00	1.00	**0.74**	0.6	1.00	1.00	0.76	0.6	1.00	1.00	0.81	0.7
		ΔT	26.56	24.69	21.20	17.6	26.50	24.64	21.15	17.5	26.77	24.90	21.41	17.8	26.48	24.62	**21.13**	17.5	26.24	24.37	20.88	17.3	27.40	25.54	22.05	18.4
		kW	6.07	6.06	6.05	6.1	6.79	6.78	6.77	6.8	7.60	7.59	7.58	7.6	8.47	8.46	**8.45**	8.5	9.44	9.44	9.43	9.5	10.59	10.58	10.57	10.6
		Amps	24.10	24.08	24.02	24.3	27.41	27.38	27.33	27.6	31.10	31.08	31.02	31.3	35.10	35.07	**35.01**	35.3	39.56	39.53	39.48	39.7	44.80	44.77	44.71	45.0
		Hi PR	256	257	258	262.7	295	296	298	302.4	337	338	339	343.9	381	382	**384**	388.6	430	431	432	436.8	481	482	484	488.2
		Lo PR	127	128	132	136.7	134	136	139	144.2	141	142	146	150.8	146	148	**151**	156.3	152	153	157	161.8	159	160	163	168.6
	3375	MBh	109.1	110.5	113.6	118.4	108.1	109.6	112.7	117.4	105.4	106.9	110.0	114.7	100.8	102.2	105.3	110.1	95.1	96.5	99.6	104.4	89.9	91.3	94.4	99.2
		S/T	1.00	0.83	0.70	0.6	1.00	0.84	0.71	0.6	1.00	0.86	0.73	0.6	1.00	1.00	0.75	0.6	1.00	1.00	0.77	0.6	1.00	1.00	0.82	0.7
		ΔT	25.61	23.75	20.26	16.6	25.56	23.70	20.21	16.6	25.83	23.96	20.47	16.9	25.54	23.68	20.19	16.6	25.29	23.43	19.94	16.3	26.46	24.60	21.11	17.5
		kW	6.10	6.09	6.08	6.1	6.82	6.81	6.80	6.9	7.63	7.62	7.61	7.7	8.50	8.49	8.48	8.5	9.47	9.47	9.46	9.5	10.62	10.61	10.60	10.7
		Amps	24.25	24.22	24.16	24.4	27.55	27.53	27.47	27.7	31.24	31.22	31.16	31.4	35.24	35.21	35.16	35.4	39.70	39.68	39.62	39.9	44.94	44.91	44.86	45.1
		Hi PR	258	259	261	265.1	297	299	300	304.7	339	340	342	346.2	384	385	387	390.9	432	433	435	439.1	483	484	486	490.5
		Lo PR	129	131	134	139.2	137	138	141	146.7	143	145	148	153.2	149	150	154	158.8	154	156	159	164.2	161	163	166	171.0
85	2625	MBh	107.5	108.9	112.0	116.8	106.6	108.0	111.1	115.9	103.8	105.3	108.4	113.1	99.2	100.6	103.7	108.5	93.5	95.0	98.1	102.8	88.3	89.7	92.8	97.6
		S/T	1.00	0.88	0.76	0.6	1.00	1.00	0.76	0.6	1.00	1.00	0.79	0.7	1.00	1.00	0.80	0.7	1.00	1.00	0.83	0.7	1.00	1.00	1.00	0.7
		ΔT	30.97	29.10	25.61	22.0	30.92	29.05	25.56	22.0	31.18	29.31	25.83	22.2	30.90	29.03	25.54	21.9	30.65	28.78	25.29	21.7	31.82	29.95	26.46	22.9
		kW	6.06	6.05	6.04	6.1	6.78	6.77	6.76	6.8	7.58	7.58	7.57	7.6	8.46	8.45	8.44	8.5	9.43	9.43	9.41	9.5	10.58	10.57	10.56	10.6
		Amps	24.05	24.03	23.97	24.2	27.36	27.33	27.28	27.5	31.05	31.03	30.97	31.2	35.05	35.02	34.96	35.2	39.51	39.48	39.43	39.7	44.75	44.72	44.66	44.9
		Hi PR	255	256	258	262.3	295	296	298	301.9	336	337	339	343.4	381	382	384	388.1	429	430	432	436.3	481	482	483	487.8
		Lo PR	127	129	132	137.1	135	136	139	144.5	141	143	146	151.1	147	148	151	156.6	152	154	157	162.1	159	161	164	168.9
	3000	MBh	108.7	110.2	113.3	118.0	107.8	109.3	112.4	117.1	105.1	106.6	109.7	114.4	100.4	101.9	105.0	109.7	94.7	96.2	99.3	104.0	89.5	91.0	94.1	98.8
		S/T	1.00	0.91	0.78	0.7	1.00	1.00	0.79	0.7	1.00	1.00	0.81	0.7	1.00	1.00	0.83	0.7	1.00	1.00	1.00	0.7	1.00	1.00	1.00	0.8
		ΔT	30.22	28.35	24.87	21.3	30.17	28.30	24.82	21.2	30.43	28.57	25.08	21.5	30.15	28.28	24.80	21.2	29.90	28.03	24.55	20.9	31.07	29.20	25.72	22.1
		kW	6.08	6.07	6.06	6.1	6.80	6.80	6.78	6.8	7.61	7.60	7.59	7.6	8.48	8.48	8.46	8.5	9.46	9.45	9.44	9.5	10.60	10.60	10.58	10.6
		Amps	24.17	24.14	24.08	24.3	27.47	27.45	27.39	27.6	31.17	31.14	31.08	31.3	35.16	35.13	35.08	35.3	39.62	39.60	39.54	39.8	44.86	44.83	44.78	45.0
		Hi PR	257	258	260	263.9	296	297	299	303.5	338	339	341	345.1	383	384	385	389.7	431	432	434	437.9	482	483	485	489.4
		Lo PR	129	130	133	138.6	136	138	141	146.1	143	144	147	152.6	148	150	153	158.2	154	155	158	163.6	161	162	165	170.4
	3375	MBh	110.8	112.3	115.4	120.1	109.9	111.3	114.4	119.2	107.2	108.6	111.7	116.5	102.5	104.0	107.1	111.8	96.8	98.3	101.4	106.1	91.6	93.1	96.2	100.9
		S/T	1.00	0.93	0.80	0.7	1.00	1.00	0.81	0.7	1.00	1.00	0.83	0.7	1.00	1.00	0.85	0.7	1.00	1.00	1.00	0.7	1.00	1.00	1.00	0.8
		ΔT	29.28	27.41	23.93	20.3	29.23	27.36	23.88	20.3	29.49	27.62	24.14	20.5	29.21	27.34	23.86	20.2	28.96	27.09	23.61	20.0	30.13	28.26	24.78	21.2
		kW	6.11	6.11	6.09	6.1	6.83	6.83	6.82	6.9	7.64	7.63	7.62	7.7	8.51	8.51	8.50	8.6	9.49	9.48	9.47	9.5	10.63	10.63	10.61	10.7
		Amps	24.31	24.28	24.23	24.5	27.62	27.59	27.53	27.8	31.31	31.28	31.22	31.5	35.30	35.28	35.22	35.5	39.77	39.74	39.68	39.9	45.00	44.98	44.92	45.2
		Hi PR	259	260	262	266.2	299	300	301	305.9	340	341	343	347.4	385	386	388	392.1	433	434	436	440.2	484	486	487	491.7
		Lo PR	131	133	136	141.0	139	140	143	148.5	145	147	150	155.1	151	152	155	160.6	156	158	161	166.0	163	164	168	172.8

IDB: Entering Indoor Dry Bulb Temperature

Shaded area reflects ACCA (TVA) conditions

kW = Total system power

High and low pressures are measured at the liquid and suction access fittings.

Amps: Unit amps (comp.+ evaporator + condenser fan motors)

Design Subcooling, 16 - 19 °F @ the liquid access fitting connection ARI 95 test conditions. Design Superheat 8 - 12°F @ the compressor suction access fitting connection.

			Outdoor Ambient Temperature																							
			65				75				85				95				105				115			
			Entering Indoor Wet Bulb Temperature																							
IDB	Airflow	ID WB	59	63	67	71	59	63	67	71	59	63	67	71	59	63	67	71	59	63	67	71	59	63	67	71
70	2625	MBh	118.5	120.2	123.7	127.5	117.5	119.1	122.6	126.5	114.4	116.1	119.6	123.4	109.2	110.8	114.3	118.2	102.8	104.4	107.9	111.7	96.9	98.5	102.0	105.9
		S/T	0.63	0.56	0.43	0.33	0.63	0.56	0.43	0.33	0.66	0.59	0.46	0.36	1.00	0.60	0.48	0.37	1.00	0.63	0.50	0.39	1.00	0.67	0.55	0.44
		ΔT	18.46	16.65	13.27	10.6	18.41	16.60	13.23	10.5	18.66	16.86	13.48	10.8	18.39	16.58	13.21	10.5	18.15	16.34	12.97	10.3	19.28	17.47	14.10	11.4
		kW	6.80	6.80	6.78	6.8	7.62	7.61	7.60	7.6	8.53	8.53	8.51	8.5	9.52	9.52	9.50	9.5	10.63	10.62	10.61	10.6	11.92	11.91	11.90	11.9
		Amps	26.68	26.65	26.59	26.7	30.43	30.40	30.33	30.5	34.61	34.58	34.51	34.7	39.13	39.10	39.03	39.2	44.18	44.15	44.09	44.2	50.11	50.08	50.02	50.2
		Hi PR	263	264	266	268.8	304	305	307	309.9	347	348	350	353.0	393	394	396	399.3	443	444	446	449.4	497	498	500	502.7
		Lo PR	125	127	130	133.6	133	134	137	141.1	139	141	144	147.6	145	146	149	153.2	150	152	155	158.6	157	159	162	165.5
	3000	MBh	120.4	122.1	125.6	129.4	119.4	121.0	124.5	128.3	116.3	118.0	121.5	125.3	111.1	112.7	116.2	120.0	104.6	106.3	109.8	113.6	98.8	100.4	103.9	107.7
		S/T	0.66	0.59	0.46	0.4	0.67	0.60	0.47	0.4	0.69	0.62	0.49	0.4	1.00	0.64	0.51	0.4	1.00	0.66	0.53	0.4	1.00	0.71	0.58	0.5
		ΔT	17.53	15.72	12.34	9.7	17.48	15.67	12.29	9.6	17.73	15.92	12.55	9.9	17.46	15.65	12.28	9.6	17.22	15.41	12.03	9.3	18.35	16.54	13.17	10.5
		kW	6.84	6.83	6.82	6.9	7.66	7.65	7.64	7.7	8.57	8.56	8.55	8.6	9.56	9.55	9.54	9.6	10.66	10.66	10.64	10.7	11.96	11.95	11.94	12.0
		Amps	26.85	26.82	26.75	26.9	30.59	30.56	30.50	30.7	34.77	34.74	34.68	34.8	39.29	39.26	39.20	39.4	44.35	44.32	44.25	44.4	50.27	50.25	50.18	50.3
		Hi PR	265	266	268	271.0	306	307	309	312.1	349	350	352	355.1	396	397	398	401.5	446	447	448	451.5	499	500	502	504.9
		Lo PR	127	129	132	135.6	135	136	139	143.1	141	143	146	149.7	147	148	152	155.2	152	154	157	160.7	159	161	164	167.5
	3375	MBh	122.9	124.6	128.1	131.9	121.9	123.6	127.0	130.9	118.8	120.5	124.0	127.8	113.6	115.2	118.7	122.6	107.2	108.8	112.3	116.1	101.3	103.0	106.4	110.3
		S/T	0.67	0.60	0.47	0.4	0.68	0.61	0.48	0.4	1.00	0.63	0.50	0.4	1.00	0.65	0.52	0.4	1.00	0.67	0.54	0.4	1.00	0.72	0.59	0.5
		ΔT	16.61	14.81	11.43	8.7	16.57	14.76	11.38	8.7	16.82	15.01	11.64	8.9	16.55	14.74	11.36	8.7	16.31	14.50	11.12	8.4	17.44	15.63	12.25	9.6
		kW	6.87	6.87	6.85	6.9	7.69	7.68	7.67	7.7	8.60	8.60	8.58	8.6	9.59	9.59	9.57	9.6	10.70	10.69	10.68	10.7	11.99	11.99	11.97	12.0
		Amps	27.01	26.98	26.91	27.1	30.75	30.72	30.66	30.8	34.93	34.90	34.84	35.0	39.45	39.42	39.36	39.5	44.51	44.48	44.41	44.6	50.44	50.41	50.34	50.5
		Hi PR	267	269	270	273.4	309	310	312	314.6	352	353	355	357.6	398	399	401	404.0	448	449	451	454.0	501	503	504	507.4
		Lo PR	130	131	134	138.2	137	139	142	145.7	144	145	149	152.3	149	151	154	157.8	155	156	160	163.3	162	163	166	170.1
75	2625	MBh	118.6	120.3	123.8	129.1	117.6	119.2	122.7	128.0	114.5	116.2	119.6	125.0	109.2	110.9	114.4	119.7	102.8	104.5	108.0	113.3	97.0	98.6	102.1	107.4
		S/T	0.75	0.68	0.55	0.4	0.76	0.68	0.56	0.4	1.00	0.71	0.58	0.4	1.00	0.73	0.60	0.5	1.00	0.75	0.62	0.5	1.00	1.00	0.67	0.5
		ΔT	22.43	20.63	17.25	13.8	22.38	20.58	17.20	13.7	22.64	20.83	17.45	14.0	22.37	20.56	17.18	13.7	22.12	20.32	16.94	13.4	23.26	21.45	18.07	14.6
		kW	6.80	6.79	6.78	6.8	7.61	7.61	7.59	7.7	8.53	8.52	8.51	8.6	9.52	9.51	9.50	9.6	10.62	10.61	10.60	10.7	11.92	11.91	11.90	12.0
		Amps	26.66	26.63	26.56	26.9	30.40	30.37	30.31	30.6	34.58	34.55	34.49	34.8	39.10	39.07	39.01	39.3	44.16	44.13	44.06	44.3	50.09	50.06	49.99	50.3
		Hi PR	263	264	266	270.5	304	305	307	311.6	347	348	350	354.7	394	395	397	401.1	444	445	447	451.1	497	498	500	504.5
		Lo PR	125	127	130	135.1	133	134	137	142.6	139	141	144	149.2	145	146	150	154.8	150	152	155	160.2	157	159	162	167.0
	3000	MBh	120.5	122.1	125.6	131.0	119.4	121.1	124.6	129.9	116.4	118.0	121.5	126.9	111.1	**112.8**	116.3	121.6	104.7	106.3	109.8	115.2	98.8	100.5	104.0	109.3
		S/T	0.78	0.71	0.58	0.4	1.00	0.72	0.59	0.5	1.00	0.74	0.61	0.5	1.00	**0.76**	0.63	0.5	1.00	0.78	0.65	0.5	1.00	1.00	0.70	0.6
		ΔT	21.50	19.69	16.32	12.8	21.45	19.65	16.27	12.8	21.71	19.90	16.52	13.0	21.43	**19.63**	16.25	12.8	21.19	19.38	16.01	12.5	22.33	20.52	17.14	13.6
		kW	6.83	6.83	6.81	6.9	7.65	7.64	7.63	7.7	8.56	8.56	8.54	8.6	9.55	**9.55**	9.53	9.6	10.66	10.65	10.64	10.7	11.95	11.95	11.93	12.0
		Amps	26.82	26.79	26.73	27.0	30.57	30.54	30.47	30.8	34.75	34.72	34.65	34.9	39.27	**39.24**	39.18	39.5	44.32	44.29	44.23	44.5	50.25	50.22	50.16	50.4
		Hi PR	265	266	268	272.7	306	307	309	313.8	349	351	352	356.9	396	**397**	399	403.3	446	447	449	453.3	499	500	502	506.6
		Lo PR	127	129	132	137.2	135	136	139	144.7	141	143	146	151.2	147	**148**	152	156.8	152	154	157	162.2	159	161	164	169.1
	3375	MBh	123.0	124.7	128.2	133.5	122.0	123.6	127.1	132.5	118.9	120.6	124.1	129.4	113.7	115.3	118.8	124.1	107.2	108.9	112.4	117.7	101.4	103.0	106.5	111.9
		S/T	0.79	0.72	0.59	0.5	1.00	0.73	0.60	0.5	1.00	0.75	0.62	0.5	1.00	0.77	0.64	0.5	1.00	1.00	0.66	0.5	1.00	1.00	0.71	0.6
		ΔT	20.59	18.78	15.41	11.9	20.54	18.73	15.36	11.9	20.79	18.99	15.61	12.1	20.52	18.71	15.34	11.8	20.28	18.47	15.10	11.6	21.41	19.60	16.23	12.7
		kW	6.87	6.86	6.85	6.9	7.69	7.68	7.67	7.7	8.60	8.59	8.58	8.6	9.59	9.58	9.57	9.6	10.69	10.69	10.67	10.7	11.99	11.98	11.97	12.0
		Amps	26.98	26.95	26.89	27.2	30.73	30.70	30.63	30.9	34.91	34.88	34.81	35.1	39.43	39.40	39.34	39.6	44.48	44.45	44.39	44.7	50.41	50.38	50.32	50.6
		Hi PR	268	269	271	275.2	309	310	312	316.3	352	353	355	359.4	398	399	401	405.7	448	449	451	455.8	502	503	505	509.1
		Lo PR	130	131	135	139.8	137	139	142	147.3	144	145	149	153.8	149	151	154	159.4	155	156	160	164.9	162	163	166	171.7

IDB: Entering Indoor Dry Bulb Temperature

Shaded area reflects ACCA (TVA) conditions

kW = Total system power

High and low pressures are measured at the liquid and suction access fittings.

Amps: Unit amps (comp.+ evaporator + condenser fan motors)

Design Subcooling, 16 - 19 °F @ the liquid access fitting connection ARI 95 test conditions. Design Superheat 8 - 12°F @ the compressor suction access fitting connection.

			Outdoor Ambient Temperature																							
			65				75				85				95				105				115			
			Entering Indoor Wet Bulb Temperature																							
IDB	Airflow	ID WB	59	63	67	71	59	63	67	71	59	63	67	71	59	63	67	71	59	63	67	71	59	63	67	71
80	2625	MBh	119.2	120.9	124.4	129.7	118.2	119.8	123.3	128.6	115.1	116.8	120.3	125.6	109.9	111.5	115.0	120.3	103.4	105.1	108.6	113.9	97.6	99.2	102.7	108.0
		S/T	1.00	0.80	0.67	0.5	1.00	0.80	0.68	0.5	1.00	0.83	0.70	0.6	1.00	1.00	0.72	0.6	1.00	1.00	0.74	0.6	1.00	1.00	0.79	0.7
		ΔT	26.44	24.63	21.25	17.8	26.39	24.58	21.20	17.7	26.64	24.83	21.46	18.0	26.37	24.56	21.18	17.7	26.13	24.32	20.94	17.4	27.26	25.45	22.08	18.6
		kW	6.80	6.79	6.78	6.8	7.62	7.61	7.60	7.7	8.53	8.53	8.51	8.6	9.52	9.51	9.50	9.6	10.62	10.62	10.60	10.7	11.92	11.91	11.90	12.0
		Amps	26.68	26.65	26.58	26.9	30.42	30.39	30.33	30.6	34.60	34.57	34.51	34.8	39.12	39.09	39.03	39.3	44.18	44.15	44.08	44.4	50.11	50.08	50.01	50.3
		Hi PR	263	265	266	271.0	305	306	308	312.1	348	349	351	355.2	394	395	397	401.6	444	445	447	451.6	497	499	500	504.9
		Lo PR	126	127	130	135.7	133	135	138	143.2	140	141	144	149.7	145	147	150	155.3	151	152	156	160.8	158	159	162	167.6
	3000	MBh	121.1	122.7	126.2	131.6	120.0	121.7	125.2	130.5	117.0	118.6	122.1	127.5	111.7	113.4	**116.9**	122.2	105.3	107.0	110.4	115.8	99.4	101.1	104.6	109.9
		S/T	1.00	0.83	0.70	0.6	1.00	0.84	0.71	0.6	1.00	0.86	0.73	0.6	1.00	1.00	**0.75**	0.6	1.00	1.00	0.77	0.6	1.00	1.00	0.82	0.7
		ΔT	25.51	23.70	20.32	16.8	25.46	23.65	20.27	16.8	25.71	23.90	20.53	17.0	25.44	23.63	**20.25**	16.8	25.20	23.39	20.01	16.5	26.33	24.52	21.14	17.6
		kW	6.84	6.83	6.82	6.9	7.66	7.65	7.63	7.7	8.57	8.56	8.55	8.6	9.56	9.55	**9.54**	9.6	10.66	10.65	10.64	10.7	11.96	11.95	11.94	12.0
		Amps	26.84	26.81	26.75	27.0	30.59	30.56	30.49	30.8	34.77	34.74	34.67	35.0	39.29	39.26	**39.19**	39.5	44.34	44.31	44.25	44.5	50.27	50.24	50.18	50.5
		Hi PR	266	267	269	273.2	307	308	310	314.3	350	351	353	357.4	396	397	**399**	403.7	446	447	449	453.7	500	501	503	507.1
		Lo PR	128	129	132	137.7	135	137	140	145.2	142	143	147	151.8	147	149	**152**	157.3	153	154	158	162.8	160	161	164	169.6
	3375	MBh	123.6	125.3	128.8	134.1	122.6	124.2	127.7	133.1	119.5	121.2	124.7	130.0	114.3	115.9	119.4	124.7	107.8	109.5	113.0	118.3	102.0	103.6	107.1	112.5
		S/T	1.00	0.84	0.71	0.6	1.00	0.85	0.72	0.6	1.00	1.00	0.74	0.6	1.00	1.00	0.76	0.6	1.00	1.00	0.78	0.6	1.00	1.00	0.83	0.7
		ΔT	24.59	22.78	19.41	15.9	24.54	22.73	19.36	15.9	24.80	22.99	19.61	16.1	24.52	22.72	19.34	15.8	24.28	22.47	19.10	15.6	25.42	23.61	20.23	16.7
		kW	6.87	6.87	6.85	6.9	7.69	7.68	7.67	7.7	8.60	8.60	8.58	8.6	9.59	9.59	9.57	9.6	10.70	10.69	10.68	10.7	11.99	11.98	11.97	12.0
		Amps	27.00	26.97	26.91	27.2	30.75	30.72	30.65	30.9	34.93	34.90	34.83	35.1	39.45	39.42	39.36	39.6	44.50	44.47	44.41	44.7	50.43	50.40	50.34	50.6
		Hi PR	268	269	271	275.7	309	310	312	316.8	352	353	355	359.8	399	400	402	406.2	449	450	452	456.2	502	503	505	509.6
		Lo PR	130	132	135	140.3	138	139	143	147.8	144	146	149	154.4	150	152	155	159.9	155	157	160	165.4	162	164	167	172.2
85	2625	MBh	121.2	122.8	126.3	131.7	120.1	121.8	125.3	130.6	117.1	118.7	122.2	127.6	111.8	113.5	117.0	122.3	105.4	107.1	110.5	115.9	99.5	101.2	104.7	110.0
		S/T	1.00	0.89	0.76	0.6	1.00	1.00	0.77	0.6	1.00	1.00	0.79	0.7	1.00	1.00	0.81	0.7	1.00	1.00	0.83	0.7	1.00	1.00	1.00	0.7
		ΔT	29.99	28.18	24.80	21.3	29.94	28.13	24.75	21.3	30.19	28.38	25.01	21.5	29.92	28.11	24.73	21.2	29.68	27.87	24.49	21.0	30.81	29.00	25.63	22.1
		kW	6.82	6.81	6.80	6.9	7.63	7.63	7.61	7.7	8.55	8.54	8.53	8.6	9.54	9.53	9.52	9.6	10.64	10.63	10.62	10.7	11.94	11.93	11.92	12.0
		Amps	26.75	26.72	26.66	26.9	30.49	30.46	30.40	30.7	34.67	34.64	34.58	34.9	39.20	39.17	39.10	39.4	44.25	44.22	44.15	44.4	50.18	50.15	50.08	50.4
		Hi PR	265	266	268	272.2	306	307	309	313.3	349	350	352	356.4	395	396	398	402.8	445	446	448	452.8	499	500	502	506.2
		Lo PR	128	129	132	137.5	135	137	140	145.0	142	143	146	151.6	147	149	152	157.2	153	154	157	162.6	160	161	164	169.4
	3000	MBh	123.1	124.7	128.2	133.5	122.0	123.7	127.2	132.5	119.0	120.6	124.1	129.4	113.7	115.4	118.8	124.2	107.3	108.9	112.4	117.8	101.4	103.1	106.6	111.9
		S/T	1.00	0.93	0.80	0.7	1.00	1.00	0.80	0.7	1.00	1.00	0.83	0.7	1.00	1.00	0.85	0.7	1.00	1.00	1.00	0.7	1.00	1.00	1.00	0.8
		ΔT	29.05	27.25	23.87	20.4	29.01	27.20	23.82	20.3	29.26	27.45	24.08	20.6	28.99	27.18	23.80	20.3	28.75	26.94	23.56	20.1	29.88	28.07	24.69	21.2
		kW	6.85	6.85	6.83	6.9	7.67	7.66	7.65	7.7	8.58	8.58	8.56	8.6	9.57	9.57	9.55	9.6	10.68	10.67	10.66	10.7	11.97	11.97	11.95	12.0
		Amps	26.91	26.88	26.82	27.1	30.66	30.63	30.56	30.9	34.84	34.81	34.74	35.0	39.36	39.33	39.27	39.6	44.41	44.38	44.32	44.6	50.34	50.31	50.25	50.5
		Hi PR	267	268	270	274.4	308	309	311	315.5	351	352	354	358.6	397	399	400	405.0	447	449	450	455.0	501	502	504	508.3
		Lo PR	130	131	134	139.6	137	139	142	147.1	144	145	148	153.6	149	151	154	159.2	155	156	159	164.6	162	163	166	171.5
	3375	MBh	125.6	127.2	130.7	136.1	124.5	126.2	129.7	135.0	121.5	123.1	126.6	132.0	116.2	117.9	121.4	126.7	109.8	111.5	115.0	120.3	103.9	105.6	109.1	114.4
		S/T	1.00	0.94	0.81	0.7	1.00	1.00	0.81	0.7	1.00	1.00	0.84	0.7	1.00	1.00	0.86	0.7	1.00	1.00	1.00	0.7	1.00	1.00	1.00	0.8
		ΔT	28.14	26.33	22.96	19.5	28.09	26.28	22.91	19.4	28.35	26.54	23.16	19.7	28.07	26.27	22.89	19.4	27.83	26.02	22.65	19.2	28.96	27.16	23.78	20.3
		kW	6.89	6.88	6.87	6.9	7.71	7.70	7.69	7.7	8.62	8.61	8.60	8.7	9.61	9.60	9.59	9.6	10.71	10.70	10.69	10.8	12.01	12.00	11.99	12.0
		Amps	27.07	27.05	26.98	27.3	30.82	30.79	30.73	31.0	35.00	34.97	34.90	35.2	39.52	39.49	39.43	39.7	44.57	44.54	44.48	44.8	50.50	50.47	50.41	50.7
		Hi PR	269	271	272	276.9	310	312	313	318.0	354	355	357	361.1	400	401	403	407.5	450	451	453	457.5	503	504	506	510.8
		Lo PR	132	134	137	142.2	140	141	144	149.7	146	148	151	156.2	152	153	157	161.8	157	159	162	167.2	164	166	169	174.1

IDB: Entering Indoor Dry Bulb Temperature

Shaded area reflects ACCA (TVA) conditions

kW = Total system power

High and low pressures are measured at the liquid and suction access fittings.

Amps: Unit amps (comp.+ evaporator + condenser fan motors)

Design Subcooling, 16 - 19 °F @ the liquid access fitting connection ARI 95 test conditions. Design Superheat 8 - 12°F @ the compressor suction access fitting connection.

			Outdoor Ambient Temperature																							
			65				75				85				95				105				115			
			Entering Indoor Wet Bulb Temperature																							
IDB	Airflow	ID WB	59	63	67	71	59	63	67	71	59	63	67	71	59	63	67	71	59	63	67	71	59	63	67	71
70	2625	MBh	141.2	143.2	147.3	151.9	140.0	141.9	146.1	150.7	136.3	138.3	142.5	147.0	130.1	132.0	136.2	140.8	122.4	124.4	128.5	133.1	115.4	117.4	121.6	126.1
		S/T	0.62	0.55	0.42	0.32	0.63	0.56	0.43	0.33	0.65	0.58	0.45	0.35	0.67	0.60	0.47	0.37	1.00	0.62	0.49	0.39	1.00	0.67	0.54	0.44
		ΔT	20.24	18.26	14.56	11.6	20.19	18.21	14.50	11.6	20.47	18.49	14.78	11.8	20.17	18.19	14.48	11.5	19.90	17.92	14.22	11.3	21.15	19.16	15.46	12.5
		kW	8.56	8.55	8.53	8.6	9.60	9.60	9.58	9.6	10.77	10.76	10.75	10.8	12.03	12.03	12.01	12.1	13.45	13.44	13.42	13.5	15.10	15.09	15.08	15.1
		Amps	32.61	32.58	32.49	32.7	37.40	37.36	37.28	37.5	42.74	42.71	42.62	42.8	48.53	48.49	48.41	48.6	54.99	54.95	54.87	55.1	62.57	62.53	62.45	62.7
		Hi PR	261	262	264	267.2	302	303	305	308.1	345	346	348	350.9	391	392	394	397.0	441	442	444	446.7	494	495	497	499.8
		Lo PR	120	122	125	128.3	127	129	132	135.5	134	135	138	141.8	139	141	144	147.2	144	146	149	152.4	151	152	155	159.0
	3000	MBh	147.6	149.6	153.8	158.3	146.4	148.4	152.5	157.1	142.8	144.7	148.9	153.5	136.5	138.5	142.6	147.2	128.8	130.8	135.0	139.5	121.9	123.8	128.0	132.6
		S/T	0.66	0.59	0.46	0.4	0.67	0.60	0.47	0.4	0.69	0.62	0.49	0.4	1.00	0.64	0.51	0.4	1.00	0.66	0.53	0.4	1.00	0.71	0.58	0.5
		ΔT	17.90	15.92	12.21	9.3	17.84	15.86	12.16	9.2	18.12	16.14	12.44	9.5	17.82	15.84	12.14	9.2	17.56	15.58	11.87	8.9	18.80	16.82	13.12	10.2
		kW	8.66	8.66	8.64	8.7	9.71	9.70	9.68	9.7	10.88	10.87	10.85	10.9	12.14	12.13	12.11	12.2	13.55	13.54	13.53	13.6	15.21	15.20	15.18	15.2
		Amps	33.10	33.06	32.98	33.2	37.88	37.84	37.76	38.0	43.23	43.19	43.11	43.3	49.01	48.97	48.89	49.1	55.47	55.43	55.35	55.6	63.05	63.01	62.93	63.1
		Hi PR	267	268	270	272.7	308	309	311	313.6	350	352	353	356.4	397	398	399	402.5	446	447	449	452.2	499	500	502	505.3
		Lo PR	126	127	130	133.7	133	134	137	140.9	139	141	144	147.2	145	146	149	152.6	150	151	154	157.8	156	158	161	164.4
	3375	MBh	152.3	154.3	158.4	163.0	151.1	153.0	157.2	161.7	147.4	149.4	153.5	158.1	141.2	143.1	147.3	151.8	133.5	135.5	139.6	144.2	126.5	128.5	132.6	137.2
		S/T	0.63	0.56	0.44	0.3	0.64	0.57	0.44	0.3	0.66	0.59	0.46	0.4	1.00	0.61	0.48	0.4	1.00	0.63	0.50	0.4	1.00	0.68	0.55	0.4
		ΔT	16.84	14.85	11.15	8.2	16.78	14.80	11.10	8.1	17.06	15.08	11.38	8.4	16.76	14.78	11.08	8.1	16.50	14.51	10.81	7.9	17.74	15.76	12.05	9.1
		kW	8.71	8.70	8.68	8.7	9.76	9.75	9.73	9.8	10.92	10.92	10.90	10.9	12.19	12.18	12.16	12.2	13.60	13.59	13.57	13.6	15.26	15.25	15.23	15.3
		Amps	33.31	33.27	33.19	33.4	38.10	38.06	37.98	38.2	43.44	43.40	43.32	43.5	49.22	49.19	49.10	49.3	55.68	55.65	55.57	55.8	63.26	63.23	63.15	63.4
		Hi PR	270	271	273	276.0	311	312	314	316.8	354	355	357	359.7	400	401	403	405.8	450	451	452	455.5	503	504	506	508.5
		Lo PR	129	131	134	137.4	137	138	141	144.6	143	144	147	150.9	148	150	153	156.2	153	155	158	161.5	160	161	164	168.0
75	2625	MBh	141.3	143.3	147.4	153.8	140.0	142.0	146.2	152.5	136.4	138.4	142.5	148.9	130.1	132.1	136.3	142.6	122.5	124.5	128.6	135.0	115.5	117.5	121.6	128.0
		S/T	0.74	0.67	0.54	0.4	0.75	0.68	0.55	0.4	1.00	0.70	0.57	0.4	1.00	0.72	0.59	0.5	1.00	0.74	0.61	0.5	1.00	0.79	0.66	0.5
		ΔT	24.60	22.62	18.92	15.1	24.55	22.57	18.86	15.0	24.83	22.85	19.14	15.3	24.53	22.55	18.84	15.0	24.26	22.28	18.58	14.7	25.51	23.52	19.82	16.0
		kW	8.55	8.54	8.53	8.6	9.60	9.59	9.57	9.7	10.76	10.76	10.74	10.8	12.03	12.02	12.00	12.1	13.44	13.43	13.41	13.5	15.10	15.09	15.07	15.1
		Amps	32.58	32.54	32.46	32.8	37.37	37.33	37.25	37.6	42.71	42.67	42.59	43.0	48.49	48.46	48.37	48.7	54.96	54.92	54.84	55.2	62.53	62.50	62.42	62.8
		Hi PR	261	263	264	268.9	302	303	305	309.8	345	346	348	352.6	391	392	394	398.7	441	442	444	448.4	494	495	497	501.5
		Lo PR	120	122	125	129.8	127	129	132	137.0	134	135	138	143.3	139	141	144	148.7	144	146	149	153.9	151	152	155	160.5
	3000	MBh	147.7	149.7	153.9	160.2	146.5	148.4	152.6	159.0	142.8	144.8	149.0	155.3	136.6	**138.5**	142.7	149.1	128.9	130.9	135.1	141.4	121.9	123.9	128.1	134.4
		S/T	0.78	0.71	0.58	0.5	0.79	0.72	0.59	0.5	1.00	0.74	0.61	0.5	1.00	**0.76**	0.63	0.5	1.00	0.78	0.65	0.5	1.00	1.00	0.70	0.6
		ΔT	22.26	20.28	16.57	12.7	22.20	20.22	16.52	12.7	22.48	20.50	16.80	13.0	22.18	**20.20**	16.50	12.7	21.92	19.94	16.23	12.4	23.16	21.18	17.48	13.6
		kW	8.66	8.65	8.63	8.7	9.70	9.69	9.68	9.8	10.87	10.86	10.84	10.9	12.13	**12.13**	12.11	12.2	13.55	13.54	13.52	13.6	15.20	15.19	15.18	15.3
		Amps	33.06	33.03	32.94	33.3	37.85	37.81	37.73	38.1	43.19	43.16	43.07	43.4	48.98	**48.94**	48.86	49.2	55.44	55.40	55.32	55.7	63.02	62.98	62.90	63.3
		Hi PR	267	268	270	274.4	308	309	311	315.3	351	352	354	358.1	397	**398**	400	404.2	446	448	449	454.0	500	501	502	507.0
		Lo PR	126	127	130	135.2	133	134	137	142.4	139	141	144	148.7	145	**146**	149	154.1	150	151	154	159.3	156	158	161	165.9
	3375	MBh	152.4	154.3	158.5	164.9	151.1	153.1	157.3	163.6	147.5	149.5	153.6	160.0	141.2	143.2	147.4	153.7	133.6	135.5	139.7	146.1	126.6	128.6	132.7	139.1
		S/T	0.75	0.68	0.56	0.4	1.00	0.69	0.56	0.4	1.00	0.71	0.59	0.5	1.00	0.73	0.60	0.5	1.00	1.00	0.62	0.5	1.00	1.00	0.67	0.5
		ΔT	21.20	19.21	15.51	11.7	21.14	19.16	15.46	11.6	21.42	19.44	15.74	11.9	21.12	19.14	15.44	11.6	20.86	18.87	15.17	11.3	22.10	20.12	16.41	12.6
		kW	8.70	8.70	8.68	8.8	9.75	9.74	9.72	9.8	10.92	10.91	10.89	11.0	12.18	12.17	12.15	12.2	13.59	13.58	13.57	13.6	15.25	15.24	15.22	15.3
		Amps	33.28	33.24	33.16	33.5	38.07	38.03	37.95	38.3	43.41	43.37	43.29	43.7	49.19	49.16	49.07	49.4	55.65	55.62	55.53	55.9	63.23	63.20	63.11	63.5
		Hi PR	270	271	273	277.7	311	312	314	318.6	354	355	357	361.4	400	401	403	407.5	450	451	453	457.2	503	504	506	510.3
		Lo PR	129	131	134	138.9	137	138	141	146.1	143	144	147	152.4	148	150	153	157.8	153	155	158	163.0	160	161	165	169.6

IDB: Entering Indoor Dry Bulb Temperature

Shaded area reflects ACCA (TVA) conditions

kW = Total system power

High and low pressures are measured at the liquid and suction access fittings.

Amps: Unit amps (comp.+ evaporator + condenser fan motors)

Design Subcooling, 16 - 19 °F @ the liquid access fitting connection ARI 95 test conditions. Design Superheat 8 - 12°F @ the compressor suction access fitting connection.

Expanded Cooling Data

			Outdoor Ambient Temperature																							
			65				75				85				95				105				115			
			Entering Indoor Wet Bulb Temperature																							
IDB	Airflow	ID WB	59	63	67	71	59	63	67	71	59	63	67	71	59	63	67	71	59	63	67	71	59	63	67	71
80	2625	MBh	142.0	144.0	148.1	154.5	140.8	142.7	146.9	153.3	137.1	139.1	143.3	149.6	130.9	132.8	137.0	143.4	123.2	125.2	129.3	135.7	116.2	118.2	122.4	128.7
		S/T	0.86	0.79	0.66	0.5	1.00	0.79	0.67	0.5	1.00	0.82	0.69	0.6	1.00	0.84	0.71	0.6	1.00	1.00	0.73	0.6	1.00	1.00	0.78	0.6
		ΔT	28.99	27.01	23.31	19.5	28.94	26.96	23.25	19.4	29.22	27.24	23.53	19.7	28.92	26.94	23.23	19.4	28.65	26.67	22.97	19.1	29.90	27.91	24.21	20.4
		kW	8.56	8.55	8.53	8.6	9.60	9.59	9.58	9.7	10.77	10.76	10.74	10.8	12.03	12.03	12.01	12.1	13.45	13.44	13.42	13.5	15.10	15.09	15.08	15.2
		Amps	32.61	32.57	32.49	32.9	37.39	37.36	37.27	37.6	42.74	42.70	42.62	43.0	48.52	48.48	48.40	48.8	54.98	54.94	54.86	55.2	62.56	62.52	62.44	62.8
		Hi PR	262	263	265	269.4	303	304	306	310.3	346	347	349	353.1	392	393	395	399.2	441	443	444	448.9	494	496	497	501.9
		Lo PR	121	122	125	130.3	128	129	132	137.5	134	136	139	143.8	140	141	144	149.2	145	146	149	154.4	151	153	156	161.0
	3000	MBh	148.4	150.4	154.6	160.9	147.2	149.2	153.3	159.7	143.6	145.5	149.7	156.1	137.3	139.3	**143.4**	149.8	129.6	131.6	135.8	142.1	122.7	124.6	128.8	135.2
		S/T	1.00	0.83	0.70	0.6	1.00	0.83	0.71	0.6	1.00	0.86	0.73	0.6	1.00	1.00	**0.75**	0.6	1.00	1.00	0.77	0.6	1.00	1.00	0.82	0.7
		ΔT	26.65	24.67	20.96	17.1	26.59	24.61	20.91	17.1	26.87	24.89	21.19	17.4	26.57	24.59	**20.89**	17.1	26.31	24.33	20.62	16.8	27.55	25.57	21.87	18.0
		kW	8.66	8.65	8.64	8.7	9.71	9.70	9.68	9.8	10.88	10.87	10.85	10.9	12.14	12.13	**12.11**	12.2	13.55	13.54	13.52	13.6	15.21	15.20	15.18	15.3
		Amps	33.09	33.05	32.97	33.3	37.88	37.84	37.76	38.1	43.22	43.18	43.10	43.5	49.00	48.96	**48.88**	49.2	55.46	55.43	55.34	55.7	63.04	63.00	62.92	63.3
		Hi PR	267	269	270	274.9	308	309	311	315.8	351	352	354	358.6	397	398	**400**	404.7	447	448	450	454.4	500	501	503	507.5
		Lo PR	126	128	131	135.7	133	135	138	142.9	140	141	144	149.3	145	147	**150**	154.6	150	152	155	159.8	157	158	161	166.4
	3375	MBh	153.1	155.1	159.2	165.6	151.9	153.8	158.0	164.3	148.2	150.2	154.3	160.7	142.0	143.9	148.1	154.4	134.3	136.3	140.4	146.8	127.3	129.3	133.4	139.8
		S/T	1.00	0.80	0.67	0.5	1.00	0.81	0.68	0.5	1.00	0.83	0.70	0.6	1.00	1.00	0.72	0.6	1.00	1.00	0.74	0.6	1.00	1.00	0.79	0.7
		ΔT	25.59	23.60	19.90	16.1	25.53	23.55	19.85	16.0	25.81	23.83	20.13	16.3	25.51	23.53	19.83	16.0	25.25	23.26	19.56	15.7	26.49	24.51	20.80	17.0
		kW	8.71	8.70	8.68	8.8	9.76	9.75	9.73	9.8	10.92	10.91	10.90	11.0	12.19	12.18	12.16	12.2	13.60	13.59	13.57	13.7	15.25	15.25	15.23	15.3
		Amps	33.31	33.27	33.19	33.6	38.09	38.06	37.97	38.3	43.44	43.40	43.32	43.7	49.22	49.18	49.10	49.5	55.68	55.64	55.56	55.9	63.26	63.22	63.14	63.5
		Hi PR	271	272	274	278.2	312	313	315	319.0	354	356	357	361.9	401	402	403	408.0	450	451	453	457.7	503	504	506	510.7
		Lo PR	130	131	134	139.4	137	139	142	146.6	143	145	148	152.9	149	150	153	158.3	154	155	158	163.5	161	162	165	170.1
85	2625	MBh	144.4	146.3	150.5	156.9	143.1	145.1	149.2	155.6	139.5	141.4	145.6	152.0	133.2	135.2	139.3	145.7	125.6	127.5	131.7	138.1	118.6	120.5	124.7	131.1
		S/T	1.00	0.88	0.76	0.6	1.00	0.89	0.76	0.6	1.00	1.00	0.79	0.7	1.00	1.00	0.80	0.7	1.00	1.00	0.82	0.7	1.00	1.00	0.87	0.7
		ΔT	32.89	30.90	27.20	23.4	32.83	30.85	27.15	23.3	33.11	31.13	27.43	23.6	32.81	30.83	27.13	23.3	32.55	30.56	26.86	23.0	33.79	31.81	28.10	24.3
		kW	8.58	8.57	8.55	8.6	9.62	9.61	9.60	9.7	10.79	10.78	10.76	10.8	12.05	12.05	12.03	12.1	13.47	13.46	13.44	13.5	15.12	15.11	15.10	15.2
		Amps	32.70	32.66	32.58	32.9	37.49	37.45	37.37	37.7	42.83	42.79	42.71	43.1	48.61	48.57	48.49	48.9	55.07	55.03	54.95	55.3	62.65	62.61	62.53	62.9
		Hi PR	263	264	266	270.6	304	305	307	311.5	347	348	350	354.3	393	394	396	400.4	443	444	446	450.1	496	497	499	503.2
		Lo PR	123	124	127	132.1	130	131	134	139.3	136	138	141	145.6	141	143	146	151.0	147	148	151	156.2	153	155	158	162.8
	3000	MBh	150.8	152.8	156.9	163.3	149.5	151.5	155.7	162.0	145.9	147.9	152.0	158.4	139.6	141.6	145.8	152.1	132.0	134.0	138.1	144.5	125.0	127.0	131.1	137.5
		S/T	1.00	0.92	0.80	0.7	1.00	1.00	0.80	0.7	1.00	1.00	0.83	0.7	1.00	1.00	0.84	0.7	1.00	1.00	0.86	0.7	1.00	1.00	1.00	0.8
		ΔT	30.54	28.56	24.86	21.0	30.49	28.50	24.80	21.0	30.77	28.78	25.08	21.2	30.47	28.48	24.78	20.9	30.20	28.22	24.52	20.7	31.44	29.46	25.76	21.9
		kW	8.68	8.67	8.66	8.7	9.73	9.72	9.70	9.8	10.90	10.89	10.87	10.9	12.16	12.15	12.13	12.2	13.57	13.56	13.54	13.6	15.23	15.22	15.20	15.3
		Amps	33.18	33.14	33.06	33.4	37.97	37.93	37.85	38.2	43.31	43.27	43.19	43.6	49.09	49.06	48.97	49.3	55.55	55.52	55.43	55.8	63.13	63.10	63.01	63.4
		Hi PR	269	270	272	276.1	310	311	312	317.0	352	353	355	359.8	398	400	401	405.9	448	449	451	455.6	501	502	504	508.7
		Lo PR	128	129	132	137.5	135	137	140	144.7	142	143	146	151.0	147	148	151	156.4	152	154	157	161.6	159	160	163	168.2
	3375	MBh	155.5	157.4	161.6	167.9	154.2	156.2	160.3	166.7	150.6	152.5	156.7	163.1	144.3	146.3	150.4	156.8	136.6	138.6	142.8	149.1	129.7	131.6	135.8	142.2
		S/T	1.00	0.89	0.77	0.6	1.00	1.00	0.77	0.6	1.00	1.00	0.80	0.7	1.00	1.00	0.81	0.7	1.00	1.00	1.00	0.7	1.00	1.00	1.00	0.8
		ΔT	29.48	27.50	23.79	20.0	29.43	27.44	23.74	19.9	29.70	27.72	24.02	20.2	29.41	27.42	23.72	19.9	29.14	27.16	23.45	19.6	30.38	28.40	24.70	20.9
		kW	8.73	8.72	8.70	8.8	9.78	9.77	9.75	9.8	10.94	10.93	10.92	11.0	12.21	12.20	12.18	12.3	13.62	13.61	13.59	13.7	15.27	15.27	15.25	15.3
		Amps	33.40	33.36	33.28	33.6	38.18	38.15	38.06	38.4	43.53	43.49	43.41	43.8	49.31	49.27	49.19	49.6	55.77	55.73	55.65	56.0	63.35	63.31	63.23	63.6
		Hi PR	272	273	275	279.4	313	314	316	320.3	356	357	359	363.1	402	403	405	409.2	451	453	454	458.9	504	506	507	512.0
		Lo PR	132	133	136	141.2	139	140	143	148.4	145	147	150	154.7	151	152	155	160.1	156	157	160	165.3	162	164	167	171.9

IDB: Entering Indoor Dry Bulb Temperature

Shaded area reflects ACCA (TVA) conditions

kW = Total system power

High and low pressures are measured at the liquid and suction access fittings.

Amps: Unit amps (comp.+ evaporator + condenser fan motors)

Design Subcooling, 16 - 19 °F @ the liquid access fitting connection ARI 95 test conditions. Design Superheat 8 - 12°F @ the compressor suction access fitting connection.

Heating Rating Table - Natural Gas and Propane[1]

Unit	Rated High Input (MBH)	Gas Heat	Input/Output (MBH)	Temp Rise High (ºF)	Temp Rise Low (ºF)	Thermal Efficiency (T.E.)	Recommended Minimum Airflow (SCFM)	Recommended Maximum Airflow (SCFM)
DRG090	130	High	130/105.3	25 - 55		81%	1765	3882
		Low	97.5/79		25-55		1323	2912
	180	High	180/145.8	25 - 55		81%	2443	5375
		Low	135/109.35		25-55		1832	4031
	225	High	225/182.25	40 - 70		81%	2400	4199
		Low	168.75/136.69		40 - 70		1800	3149
DRG102	130	High	130/105.3	25 - 55		81%	1765	3882
		Low	97.5/79		25-55		1323	2912
	180	High	180/145.8	25 - 55		81%	2443	5375
		Low	135/109.35		25-55		1832	4031
	225	High	225/182.25	40 - 70		81%	2400	4199
		Low	168.75/136.69		40 - 70		1800	3149
DRG120	130	High	130/105.3	25 - 55		81%	1765	3882
		Low	97.5/79		25-55		1323	2912
	180	High	180/145.8	25 - 55		81%	2443	5375
		Low	135/109.35		25-55		1832	4031
	240	High	240/194.4	30 - 60		81%	2986	5972
		Low	180/145.8		30 - 60		2240	4479
DRG150	130	High	130/105.3	25 - 55		81%	1765	3882
		Low	97.5/79		25-55		1323	2912
	180	High	180/145.8	25 - 55		81%	2443	5375
		Low	135/109.35		25-55		1832	4031
	240	High	240/194.4	35 - 65		81%	2756	5119
		Low	180/145.8		35 - 65		2067	3839

[1]LP High Fire Rate is Reduced 10% that of Natural Gas

Heat Exchanger and Burner Orifice Specifications

Unit	Maxium Input (Btuh)	Number of Burners	NG Orifice	LP Orifice
DRG090	130,000	5	41	54
	180,000	6	37	53
	225,000	7	36	52
DRG102	130,000	5	41	54
	180,000	6	37	53
	225,000	7	36	52
DRG120	130,000	5	41	54
	180,000	6	37	53
	240,000	7	34	51
DRG150	130,000	5	41	54
	180,000	6	37	53
	240,000	7	34	51

7.5 Ton • 130 MBH Gas Heat Exchanger • Standard Static Direct Drive

Models: DRG0903DL, DRG0904DL, DRG0907DL

Down Flow				
Speed Tap	**ESP**	**CFM**	**RPM**	**BHP**
T1	0.2	1882	544	0.38
	0.4	-	-	-
	0.6	-	-	-
	0.8	-	-	-
T2	0.2	2589	629	0.67
	0.4	2410	681	0.73
	0.6	2216	734	0.79
	0.8	2038	782	0.84
T3	0.2	3144	708	1.01
	0.4	2961	753	1.08
	0.6	2802	799	1.14
	0.8	2651	841	1.20
T4	0.2	3413	753	1.23
	0.4	3222	794	1.29
	0.6	3070	836	1.36
	0.8	2940	875	1.43
T5	0.2	3622	793	1.43
	0.4	3422	830	1.50
	0.6	3268	868	1.57
	0.8	3160	904	1.64
T6	0.2	1901	546	0.38
	0.4	1713	605	0.42
	0.6	1453	667	0.47
	0.8	-	-	-
T7	0.2	2107	569	0.46
	0.4	1922	627	0.50
	0.6	1684	686	0.55
	0.8	1495	738	0.59
T8	0.2	2301	592	0.54
	0.4	2119	648	0.59
	0.6	1900	704	0.64
	0.8	-	-	-
T9	0.2	2920	674	0.86
	0.4	2740	722	0.92
	0.6	2569	771	0.98
	0.8	2405	816	1.04
T10	0.2	3427	756	1.24
	0.4	3236	797	1.31
	0.6	3084	838	1.38
	0.8	2955	877	1.44

Horizontal Flow				
Speed Tap	**ESP**	**CFM**	**RPM**	**BHP**
T1	0.2	2029	488	0.34
	0.4	-	-	-
	0.6	-	-	-
	0.8	-	-	-
T2	0.2	2748	571	0.61
	0.4	2554	627	0.67
	0.6	2337	697	0.75
	0.8	2148	750	0.80
T3	0.2	3289	649	0.93
	0.4	3133	690	0.99
	0.6	2972	745	1.06
	0.8	2802	792	1.13
T4	0.2	3539	693	1.13
	0.4	3419	726	1.18
	0.6	3282	773	1.26
	0.8	3132	816	1.33
T5	0.2	3724	732	1.32
	0.4	3647	757	1.37
	0.6	3525	797	1.44
	0.8	3401	836	1.51
T6	0.2	2048	490	0.34
	0.4	1853	561	0.39
	0.6	1559	646	0.45
	0.8	1374	707	0.49
T7	0.2	2260	513	0.41
	0.4	2061	580	0.47
	0.6	1791	660	0.53
	0.8	1602	719	0.58
T8	0.2	2458	535	0.49
	0.4	2259	598	0.54
	0.6	2011	674	0.61
	0.8	1820	731	0.66
T9	0.2	3074	616	0.79
	0.4	2897	663	0.85
	0.6	2715	724	0.92
	0.8	2534	774	0.99
T10	0.2	3552	696	1.14
	0.4	3435	728	1.20
	0.6	3299	774	1.27
	0.8	3151	817	1.34

7.5 Ton • 130 MBH Gas Heat Exchanger • Medium Static Direct Drive

Models: DRG0903LL, DRG0904LL, DRG0907LL

Down Flow				
Speed Tap	**ESP**	**CFM**	**RPM**	**BHP**
T1	0.2	1882	544	0.38
	0.4	-	-	-
	0.6	-	-	-
	0.8	-	-	-
	1.0	-	-	-
	1.2	-	-	-
	1.4	-	-	-
T2	0.2	3059	695	0.95
	0.4	2877	741	1.01
	0.6	2714	788	1.08
	0.8	2558	831	1.14
	1.0	2412	870	1.19
	1.2	2218	922	1.26
	1.4	2028	965	1.32
T3	0.2	3144	708	1.01
	0.4	2961	753	1.08
	0.6	2802	799	1.14
	0.8	2651	841	1.20
	1.0	2493	880	1.26
	1.2	2307	930	1.33
	1.4	-	-	-
T4	0.2	-	-	-
	0.4	3622	874	1.77
	0.6	3458	907	1.83
	0.8	3380	940	1.90
	1.0	3265	975	1.97
	1.2	3138	1008	2.04
	1.4	2994	1043	2.11
T5	0.2	-	-	-
	0.4	3725	901	1.94
	0.6	3549	931	2.00
	0.8	3492	961	2.07
	1.0	3423	996	2.15
	1.2	3307	1026	2.21
	1.4	3180	1059	2.28
T6	0.2	2139	573	0.47
	0.4	1955	630	0.52
	0.6	1720	689	0.57
	0.8	1531	741	0.61
	1.0	1623	782	0.64
	1.2	1351	849	0.70
	1.4	-	-	-
T7	0.2	2691	642	0.73
	0.4	2512	693	0.78
	0.6	2325	745	0.84
	0.8	2152	792	0.90
	1.0	2079	832	0.94
	1.2	1854	890	1.01
	1.4	1662	937	1.06
T8	0.2	3162	711	1.02
	0.4	2979	756	1.09
	0.6	2820	801	1.15
	0.8	2671	843	1.22
	1.0	2511	882	1.27
	1.2	2326	931	1.34
	1.4	2139	974	1.40
T9	0.2	3681	805	1.50
	0.4	3477	842	1.57
	0.6	3322	878	1.64
	0.8	3220	913	1.70
	1.0	3066	950	1.77
	1.2	2925	987	1.84
	1.4	2765	1024	1.91
T10	0.2	-	-	-
	0.4	3811	927	2.12
	0.6	3620	954	2.18
	0.8	3586	983	2.25
	1.0	3578	1017	2.32
	1.2	3471	1043	2.38
	1.4	3363	1074	2.45

Horizontal Flow				
Speed Tap	**ESP**	**CFM**	**RPM**	**BHP**
T1	0.2	2029	488	0.34
	0.4	-	-	-
	0.6	-	-	-
	0.8	-	-	-
	1.0	-	-	-
	1.2	-	-	-
	1.4	-	-	-
T2	0.2	3208	636	0.87
	0.4	3043	680	0.93
	0.6	2874	737	1.01
	0.8	2699	785	1.07
	1.0	2519	829	1.13
	1.2	2312	884	1.21
	1.4	2103	948	1.30
T3	0.2	3289	649	0.93
	0.4	3133	690	0.99
	0.6	2972	745	1.06
	0.8	2802	792	1.13
	1.0	2632	836	1.19
	1.2	2436	889	1.27
	1.4	-	-	-
T4	0.2	-	-	-
	0.4	-	-	-
	0.6	-	-	-
	0.8	3693	861	1.74
	1.0	3575	905	1.83
	1.2	3461	941	1.90
	1.4	3345	991	2.00
T5	0.2	-	-	-
	0.4	-	-	-
	0.6	-	-	-
	0.8	-	-	-
	1.0	3737	920	1.98
	1.2	3633	952	2.05
	1.4	3524	999	2.15
T6	0.2	2293	516	0.42
	0.4	2093	583	0.48
	0.6	1827	663	0.54
	0.8	1637	721	0.59
	1.0	-	-	-
	1.2	-	-	-
	1.4	-	-	-
T7	0.2	2849	584	0.66
	0.4	2659	638	0.72
	0.6	2453	705	0.80
	0.8	2265	757	0.86
	1.0	2034	801	0.91
	1.2	1777	864	0.98
	1.4	1511	932	1.05
T8	0.2	3307	652	0.94
	0.4	3152	692	1.00
	0.6	2993	747	1.08
	0.8	2824	794	1.14
	1.0	2657	837	1.21
	1.2	2463	891	1.28
	1.4	2269	952	1.37
T9	0.2	3774	744	1.39
	0.4	3713	767	1.43
	0.6	3594	804	1.50
	0.8	3478	843	1.57
	1.0	3356	886	1.65
	1.2	3226	927	1.73
	1.4	3096	980	1.83
T10	0.2	-	-	-
	0.4	-	-	-
	0.6	-	-	-
	0.8	-	-	-
	1.0	3881	936	2.14
	1.2	3786	964	2.20
	1.4	3680	1008	2.30

7.5 Ton • 130 MBH Gas Heat Exchanger • High Static Direct Drive

Models: DRG0903WL, DRG0904WL, DRG0907WL

Down Flow				
Speed Tap	ESP	CFM	RPM	BHP
T1	0.2	1882	544	0.38
	0.4	-	-	-
	0.6	-	-	-
	0.8	-	-	-
	1.0	-	-	-
	1.2	-	-	-
	1.4	-	-	-
	1.6	-	-	-
	1.8	-	-	-
	2.0	-	-	-
T2	0.2	3527	774	1.34
	0.4	3332	814	1.40
	0.6	3180	853	1.47
	0.8	3061	891	1.54
	1.0	2889	927	1.60
	1.2	2735	969	1.67
	1.4	2563	1008	1.74
	1.6	2392	1050	1.81
	1.8	2237	1086	1.87
	2.0	2077	1119	1.93
T3	0.2	3144	708	1.01
	0.4	2961	753	1.08
	0.6	2802	799	1.14
	0.8	2651	841	1.20
	1.0	2493	880	1.26
	1.2	2307	930	1.33
	1.4	-	-	-
	1.6	-	-	-
	1.8	-	-	-
	2.0	-	-	-
T4	0.2	-	-	-
	0.4	-	-	-
	0.6	-	-	-
	0.8	-	-	-
	1.0	3620	1023	2.37
	1.2	3514	1048	2.43
	1.4	3412	1078	2.50
	1.6	3263	1117	2.59
	1.8	3081	1148	2.66
	2.0	2915	1184	2.75
T5	0.2	-	-	-
	0.4	-	-	-
	0.6	-	-	-
	0.8	-	-	-
	1.0	-	-	-
	1.2	3728	1071	2.68
	1.4	3656	1100	2.75
	1.6	3519	1137	2.84
	1.8	3325	1166	2.91
	2.0	3161	1203	3.01
T6	0.2	2457	612	0.61
	0.4	2277	665	0.66
	0.6	2072	720	0.72
	0.8	1891	769	0.77
	1.0	1881	810	0.81
	1.2	1636	872	0.87
	1.4	1447	921	0.92
	1.6	-	-	-
	1.8	-	-	-
	2.0	-	-	-

Horizontal Flow				
Speed Tap	ESP	CFM	RPM	BHP
T1	0.2	2029	488	0.34
	0.4	-	-	-
	0.6	-	-	-
	0.8	-	-	-
	1.0	-	-	-
	1.2	-	-	-
	1.4	-	-	-
	1.6	-	-	-
	1.8	-	-	-
	2.0	-	-	-
T2	0.2	3642	714	1.23
	0.4	3544	743	1.28
	0.6	3415	786	1.36
	0.8	3278	827	1.43
	1.0	3147	870	1.50
	1.2	2998	915	1.58
	1.4	2852	971	1.68
	1.6	2666	1010	1.74
	1.8	2482	1060	1.83
	2.0	2323	1096	1.89
T3	0.2	3289	649	0.93
	0.4	3133	690	0.99
	0.6	2972	745	1.06
	0.8	2802	792	1.13
	1.0	2632	836	1.19
	1.2	2436	889	1.27
	1.4	-	-	-
	1.6	-	-	-
	1.8	-	-	-
	2.0	-	-	-
T4	0.2	-	-	-
	0.4	-	-	-
	0.6	-	-	-
	0.8	-	-	-
	1.0	-	-	-
	1.2	-	-	-
	1.4	3718	1010	2.34
	1.6	3610	1040	2.41
	1.8	3473	1094	2.54
	2.0	3351	1130	2.62
T5	0.2	-	-	-
	0.4	-	-	-
	0.6	-	-	-
	0.8	-	-	-
	1.0	-	-	-
	1.2	-	-	-
	1.4	-	-	-
	1.6	3825	1049	2.62
	1.8	3707	1104	2.76
	2.0	3599	1140	2.85
T6	0.2	2616	554	0.55
	0.4	2418	613	0.61
	0.6	2188	686	0.68
	0.8	1997	741	0.74
	1.0	1729	785	0.78
	1.2	1439	852	0.85
	1.4	-	-	-
	1.6	-	-	-
	1.8	-	-	-
	2.0	-	-	-

7.5 Ton • 130 MBH Gas Heat Exchanger • High Static Direct Drive

Models: DRG0903WL, DRG0904WL, DRG0907WL

Down Flow					Horizontal Flow				
Speed Tap	ESP	CFM	RPM	BHP	Speed Tap	ESP	CFM	RPM	BHP
T7	0.2	-	-	-	T7	0.2	-	-	-
	0.4	2838	735	0.99		0.4	-	-	-
	0.6	2672	783	1.05		0.6	2828	733	0.98
	0.8	2514	827	1.11		0.8	2651	782	1.05
	1.0	2374	866	1.16		1.0	2466	825	1.11
	1.2	2177	918	1.23		1.2	2253	882	1.18
	1.4	1986	962	1.29		1.4	2038	946	1.27
	1.6	1815	1006	1.35		1.6	1869	991	1.33
	1.8	1667	1046	1.40		1.8	1668	1038	1.39
	2.0	1522	1077	1.44		2.0	1495	1074	1.44
T8	0.2	3482	766	1.29	T8	0.2	3601	706	1.19
	0.4	3289	806	1.36		0.4	3495	736	1.24
	0.6	3137	846	1.43		0.6	3363	780	1.32
	0.8	3014	884	1.49		0.8	3221	822	1.39
	1.0	2840	921	1.55		1.0	3086	866	1.46
	1.2	2682	964	1.63		1.2	2932	912	1.54
	1.4	2507	1003	1.69		1.4	2780	969	1.63
	1.6	2335	1045	1.76		1.6	2594	1008	1.70
	1.8	2182	1082	1.83		1.8	2408	1058	1.78
	2.0	2022	1115	1.88		2.0	2247	1094	1.85
T9	0.2	-	-	-	T9	0.2	-	-	-
	0.4	3783	918	2.06		0.4	-	-	-
	0.6	3598	946	2.12		0.6	-	-	-
	0.8	3556	976	2.19		0.8	-	-	-
	1.0	3525	1010	2.26		1.0	3833	930	2.08
	1.2	3415	1037	2.32		1.2	3735	960	2.15
	1.4	3300	1069	2.39		1.4	3629	1005	2.25
	1.6	3146	1108	2.48		1.6	3503	1036	2.32
	1.8	2969	1139	2.55		1.8	3358	1089	2.44
	2.0	2802	1175	2.63		2.0	3229	1125	2.52
T10	0.2	-	-	-	T10	0.2	-	-	-
	0.4	-	-	-		0.4	-	-	-
	0.6	-	-	-		0.6	-	-	-
	0.8	-	-	-		0.8	-	-	-
	1.0	-	-	-		1.0	3659	998	2.50
	1.2	3653	1072	2.68		1.2	3638	1008	2.52
	1.4	3550	1101	2.75		1.4	3585	1022	2.56
	1.6	3452	1131	2.83		1.6	3500	1052	2.63
	1.8	3353	1163	2.91		1.8	3382	1091	2.73
	2.0	3247	1196	2.99		2.0	3286	1124	2.81

7.5 Ton • 180 MBH Gas Heat Exchanger • Standard Static Direct Drive

Models: DRG0903DM, DRG0904DM, DRG0907DM

Down Flow				
Speed Tap	**ESP**	**CFM**	**RPM**	**BHP**
T1	0.2	1954	552	0.40
	0.4	-	-	-
	0.6	-	-	-
	0.8	-	-	-
T2	0.2	2589	629	0.67
	0.4	2410	681	0.73
	0.6	2216	734	0.79
	0.8	2038	782	0.84
T3	0.2	3017	730	1.06
	0.4	2897	773	1.13
	0.6	2760	818	1.19
	0.8	2633	859	1.25
T4	0.2	3251	774	1.26
	0.4	3095	813	1.33
	0.6	2954	853	1.39
	0.8	2827	893	1.46
T5	0.2	3417	815	1.47
	0.4	3274	846	1.53
	0.6	3126	887	1.60
	0.8	2988	923	1.66
T6	0.2	1416	213	0.21
	0.4	-	-	-
	0.6	-	-	-
	0.8	-	-	-
T7	0.2	1975	554	0.41
	0.4	-	-	-
	0.6	-	-	-
	0.8	-	-	-
T8	0.2	2156	579	0.54
	0.4	1956	637	0.59
	0.6	-	-	-
	0.8	-	-	-
T9	0.2	2936	677	0.87
	0.4	2756	724	0.93
	0.6	2586	773	0.99
	0.8	-	-	-
T10	0.2	3427	756	1.24
	0.4	3236	797	1.31
	0.6	3084	838	1.38
	0.8	2955	877	1.44

Horizontal Flow				
Speed Tap	**ESP**	**CFM**	**RPM**	**BHP**
T1	0.2	2030	500	0.36
	0.4	-	-	-
	0.6	-	-	-
	0.8	-	-	-
T2	0.2	2675	594	0.64
	0.4	2487	642	0.69
	0.6	2336	698	0.75
	0.8	2089	777	0.83
T3	0.2	3161	679	0.99
	0.4	3068	713	1.04
	0.6	2899	768	1.12
	0.8	2776	809	1.18
T4	0.2	3413	704	1.15
	0.4	3244	742	1.21
	0.6	3108	785	1.28
	0.8	2963	823	1.34
T5	0.2	3563	693	1.25
	0.4	3526	771	1.39
	0.6	3402	814	1.47
	0.8	3317	858	1.55
T6	0.2	1604	448	0.25
	0.4	-	-	-
	0.6	-	-	-
	0.8	-	-	-
T7	0.2	2056	505	0.37
	0.4	1832	582	0.43
	0.6	-	-	-
	0.8	-	-	-
T8	0.2	2434	558	0.52
	0.4	2251	616	0.57
	0.6	-	-	-
	0.8	-	-	-
T9	0.2	2975	642	0.83
	0.4	2799	680	0.88
	0.6	2585	734	0.94
	0.8	-	-	-
T10	0.2	3413	704	1.15
	0.4	3244	742	1.21
	0.6	3108	785	1.28
	0.8	2963	823	1.34

7.5 Ton • 180 MBH Gas Heat Exchanger • Medium Static Direct Drive

Models: DRG0903LM, DRG0904LM, DRG0907LM

Down Flow				
Speed Tap	**ESP**	**CFM**	**RPM**	**BHP**
T1	0.2	1954	552	0.40
	0.4	-	-	-
	0.6	-	-	-
	0.8	-	-	-
	1.0	-	-	-
	1.2	-	-	-
	1.4	-	-	-
T2	0.2	2908	718	0.98
	0.4	2754	759	1.04
	0.6	2608	806	1.10
	0.8	2473	845	1.16
	1.0	2322	892	1.22
	1.2	2105	945	1.29
	1.4	1941	996	1.36
T3	0.2	3017	730	1.06
	0.4	2897	773	1.13
	0.6	2760	818	1.19
	0.8	2633	859	1.25
	1.0	2499	900	1.31
	1.2	2280	957	1.40
	1.4	-	-	-
T4	0.2	3629	851	1.72
	0.4	3548	882	1.79
	0.6	3484	917	1.86
	0.8	3375	955	1.93
	1.0	3293	989	2.00
	1.2	3185	1020	2.06
	1.4	3102	1056	2.14
T5	0.2	3765	876	1.89
	0.4	3676	902	1.94
	0.6	3614	937	2.02
	0.8	3386	980	2.11
	1.0	3274	1020	2.19
	1.2	3153	1049	2.25
	1.4	3035	1078	2.32
T6	0.2	2730	647	0.75
	0.4	2551	698	0.81
	0.6	2367	749	0.87
	0.8	2195	796	0.92
	1.0	2113	836	0.97
	1.2	1891	894	1.03
	1.4	-	-	-
T7	0.2	3108	758	1.17
	0.4	3019	797	1.23
	0.6	2932	835	1.29
	0.8	2818	876	1.36
	1.0	2696	916	1.42
	1.2	2538	949	1.47
	1.4	2378	995	1.54
T8	0.2	3541	835	1.62
	0.4	3458	868	1.68
	0.6	3391	903	1.75
	0.8	3282	941	1.82
	1.0	3195	976	1.89
	1.2	3078	1007	1.95
	1.4	2985	1044	2.02
T9	0.2	3712	865	1.83
	0.4	3634	896	1.89
	0.6	3571	930	1.96
	0.8	3463	968	2.04
	1.0	3384	1002	2.12
	1.2	3284	1033	2.18
	1.4	3210	1067	2.25
T10	0.2	3869	893	2.04
	0.4	3795	921	2.11
	0.6	3736	956	2.18
	0.8	3628	994	2.27
	1.0	3552	1029	2.35
	1.2	3468	1058	2.42
	1.4	3405	1089	2.49

Horizontal Flow				
Speed Tap	**ESP**	**CFM**	**RPM**	**BHP**
T1	0.2	2030	500	0.36
	0.4	-	-	-
	0.6	-	-	-
	0.8	-	-	-
	1.0	-	-	-
	1.2	-	-	-
	1.4	-	-	-
T2	0.2	3067	653	0.89
	0.4	2922	693	0.95
	0.6	2711	750	1.03
	0.8	2551	794	1.09
	1.0	2396	837	1.15
	1.2	2121	908	1.24
	1.4	1872	971	1.33
T3	0.2	3161	679	0.99
	0.4	3068	713	1.04
	0.6	2899	768	1.12
	0.8	2776	809	1.18
	1.0	2647	851	1.24
	1.2	2405	922	1.35
	1.4	-	-	-
T4	0.2	-	-	-
	0.4	3730	803	1.62
	0.6	3644	845	1.71
	0.8	3566	881	1.78
	1.0	3473	921	1.86
	1.2	3374	946	1.91
	1.4	3289	996	2.02
T5	0.2	-	-	-
	0.4	-	-	-
	0.6	3776	862	1.86
	0.8	3699	898	1.94
	1.0	3616	938	2.02
	1.2	3502	964	2.08
	1.4	3440	1011	2.18
T6	0.2	2782	575	0.63
	0.4	2589	631	0.69
	0.6	2376	699	0.76
	0.8	2187	753	0.82
	1.0	1946	796	0.87
	1.2	-	-	-
	1.4	-	-	-
T7	0.2	3284	678	1.05
	0.4	3187	726	1.12
	0.6	3081	772	1.19
	0.8	2988	814	1.26
	1.0	2876	857	1.32
	1.2	2770	907	1.40
	1.4	2660	936	1.45
T8	0.2	3730	746	1.44
	0.4	3640	790	1.53
	0.6	3549	833	1.61
	0.8	3470	869	1.68
	1.0	3372	909	1.76
	1.2	3288	935	1.81
	1.4	3183	986	1.91
T9	0.2	3902	774	1.63
	0.4	3813	815	1.72
	0.6	3732	857	1.81
	0.8	3655	893	1.88
	1.0	3569	932	1.97
	1.2	3458	958	2.02
	1.4	3391	1006	2.12
T10	0.2	4056	799	1.83
	0.4	3968	839	1.92
	0.6	3899	879	2.01
	0.8	3821	915	2.09
	1.0	3751	955	2.18
	1.2	3643	984	2.25
	1.4	3582	1025	2.34

7.5 Ton • 180 MBH Gas Heat Exchanger • High Static Direct Drive

Models: DRG0903WM, DRG0904WM, DRG0907WM

Down Flow				
Speed Tap	ESP	CFM	RPM	BHP
T1	0.2	1954	552	0.40
	0.4	-	-	-
	0.6	-	-	-
	0.8	-	-	-
	1.0	-	-	-
	1.2	-	-	-
	1.4	-	-	-
	1.6	-	-	-
	1.8	-	-	-
	2.0	-	-	-
T2	0.2	3316	796	1.37
	0.4	3230	831	1.43
	0.6	3153	868	1.50
	0.8	3042	907	1.57
	1.0	2939	943	1.63
	1.2	2800	976	1.68
	1.4	2676	1017	1.76
	1.6	2500	1044	1.80
	1.8	2336	1113	1.92
	2.0	2209	1162	2.01
T3	0.2	3017	730	1.06
	0.4	2897	773	1.13
	0.6	2760	818	1.19
	0.8	2633	859	1.25
	1.0	2499	900	1.31
	1.2	2280	957	1.40
	1.4	-	-	-
	1.6	-	-	-
	1.8	-	-	-
	2.0	-	-	-
T4	0.2	-	-	-
	0.4	-	-	-
	0.6	3767	961	2.23
	0.8	3660	1000	2.32
	1.0	3496	1042	2.42
	1.2	3398	1073	2.49
	1.4	3293	1099	2.55
	1.6	3065	1137	2.64
	1.8	2958	1163	2.70
	2.0	2810	1208	2.80
T5	0.2	-	-	-
	0.4	-	-	-
	0.6	-	-	-
	0.8	-	-	-
	1.0	3728	1062	2.66
	1.2	3662	1090	2.73
	1.4	3602	1116	2.79
	1.6	3523	1145	2.86
	1.8	3416	1188	2.97
	2.0	3317	1217	3.04
T6	0.2	2792	701	0.91
	0.4	2699	745	0.97
	0.6	2597	786	1.02
	0.8	2478	831	1.08
	1.0	2319	878	1.14
	1.2	2112	912	1.18
	1.4	1921	957	1.24
	1.6	-	-	-
	1.8	-	-	-
	2.0	-	-	-

Horizontal Flow				
Speed Tap	ESP	CFM	RPM	BHP
T1	0.2	2030	500	0.36
	0.4	-	-	-
	0.6	-	-	-
	0.8	-	-	-
	1.0	-	-	-
	1.2	-	-	-
	1.4	-	-	-
	1.6	-	-	-
	1.8	-	-	-
	2.0	-	-	-
T2	0.2	3316	796	1.23
	0.4	3544	743	1.28
	0.6	3415	786	1.36
	0.8	3278	827	1.43
	1.0	3147	870	1.50
	1.2	2998	915	1.58
	1.4	2852	971	1.68
	1.6	2666	1010	1.74
	1.8	2482	1060	1.83
	2.0	2323	1096	1.89
T3	0.2	3161	679	0.99
	0.4	3068	713	1.04
	0.6	2899	768	1.12
	0.8	2776	809	1.18
	1.0	2647	851	1.24
	1.2	2405	922	1.35
	1.4	-	-	-
	1.6	-	-	-
	1.8	-	-	-
	2.0	-	-	-
T4	0.2	-	-	-
	0.4	-	-	-
	0.6	-	-	-
	0.8	-	-	-
	1.0	3786	959	2.23
	1.2	3674	995	2.31
	1.4	3566	1035	2.40
	1.6	3459	1067	2.48
	1.8	3361	1097	2.55
	2.0	3261	1134	2.63
T5	0.2	-	-	-
	0.4	-	-	-
	0.6	-	-	-
	0.8	-	-	-
	1.0			-
	1.2			-
	1.4	3795	1047	2.62
	1.6	3706	1077	2.69
	1.8	3641	1114	2.79
	2.0	3565	1145	2.86
T6	0.2	2957	628	0.82
	0.4	2854	681	0.89
	0.6	2743	730	0.95
	0.8	2634	776	1.01
	1.0	2523	823	1.07
	1.2	2193	915	1.19
	1.4	1969	950	1.23
	1.6	-	-	-
	1.8	-	-	-
	2.0	-	-	-

7.5 Ton • 180 MBH Gas Heat Exchanger • High Static Direct Drive

Models: DRG0903WM, DRG0904WM, DRG0907WM

Down Flow				
Speed Tap	**ESP**	**CFM**	**RPM**	**BHP**
T7	0.2	3464	822	1.53
	0.4	3380	855	1.59
	0.6	3309	891	1.66
	0.8	3200	929	1.73
	1.0	3108	964	1.80
	1.2	2984	996	1.85
	1.4	2881	1035	1.93
	1.6	2717	1062	1.98
	1.8	2550	1130	2.10
	2.0	2357	1171	2.18
T8	0.2	3983	912	2.21
	0.4	3912	940	2.28
	0.6	3855	974	2.36
	0.8	3748	1014	2.46
	1.0	3671	1051	2.55
	1.2	3598	1079	2.62
	1.4	3538	1107	2.68
	1.6	3446	1136	2.75
	1.8	3326	1183	2.87
	2.0	3210	1213	2.94
T9	0.2	4119	935	2.44
	0.4	4054	962	2.51
	0.6	3998	997	2.60
	0.8	3890	1039	2.71
	1.0	3806	1079	2.82
	1.2	3747	1106	2.89
	1.4	3686	1130	2.95
	1.6	3625	1160	3.03
	1.8	3541	1195	3.12
	2.0	3456	1222	3.19
T10	0.2	-	-	-
	0.4	-	-	-
	0.6	-	-	-
	0.8	-	-	-
	1.0	4156	1104	3.08
	1.2	4032	1128	3.14
	1.4	3908	1151	3.21
	1.6	3784	1175	3.27
	1.8	3660	1198	3.34
	2.0	3536	1222	3.40

Horizontal Flow				
Speed Tap	**ESP**	**CFM**	**RPM**	**BHP**
T7	0.2	3652	734	1.37
	0.4	3562	778	1.45
	0.6	3467	822	1.53
	0.8	3386	859	1.60
	1.0	3284	899	1.67
	1.2	3212	927	1.73
	1.4	3090	977	1.82
	1.6	2966	1013	1.89
	1.8	2649	1112	2.07
	2.0	2521	1147	2.14
T8	0.2	4167	817	1.98
	0.4	4077	857	2.08
	0.6	4019	895	2.17
	0.8	3939	931	2.26
	1.0	3885	973	2.36
	1.2	3827	1008	2.44
	1.4	3723	1040	2.52
	1.6	3622	1070	2.59
	1.8	3569	1108	2.69
	2.0	3472	1139	2.76
T9	0.2	4296	839	2.19
	0.4	4205	878	2.29
	0.6	4163	915	2.39
	0.8	4077	952	2.49
	1.0	4047	996	2.60
	1.2	3954	1041	2.72
	1.4	3894	1058	2.76
	1.6	3827	1088	2.84
	1.8	3735	1123	2.93
	2.0	3680	1154	3.01
T10	0.2	-	-	-
	0.4	-	-	-
	0.6	-	-	-
	0.8	-	-	-
	1.0	-	-	-
	1.2	-	-	-
	1.4	4040	1074	2.99
	1.6	4023	1106	3.08
	1.8	3859	1138	3.17
	2.0	3812	1167	3.25

7.5 Ton • 225 MBH Gas Heat Exchanger • Standard Static Direct Drive

Models: DRG0903DH, DRG0904DH, DRG0907DH

Down Flow				
Speed Tap	**ESP**	**CFM**	**RPM**	**BHP**
T1	0.2	1954	552	0.40
	0.4	-	-	-
	0.6	-	-	-
	0.8	-	-	-
T2	0.2	2589	629	0.67
	0.4	2410	681	0.73
	0.6	2216	734	0.79
	0.8	2038	782	0.84
T3	0.2	3194	716	1.05
	0.4	3010	760	1.11
	0.6	2852	805	1.18
	0.8	2705	847	1.24
T4	0.2	3413	753	1.23
	0.4	3222	794	1.29
	0.6	3070	836	1.36
	0.8	2940	875	1.43
T5	0.2	3622	793	1.43
	0.4	3422	830	1.50
	0.6	3268	868	1.57
	0.8	3160	904	1.64
T6	0.2	2098	568	0.45
	0.4	1913	626	0.50
	0.6	-	-	-
	0.8	-	-	-
T7	0.2	2625	633	0.69
	0.4	2446	685	0.75
	0.6	2255	738	0.81
	0.8	2079	786	0.86
T8	0.2	3081	698	0.97
	0.4	2900	744	1.03
	0.6	2737	791	1.09
	0.8	2582	834	1.15
T9	0.2	3263	728	1.10
	0.4	3078	771	1.17
	0.6	2923	815	1.23
	0.8	2780	856	1.30
T10	0.2	3427	756	1.24
	0.4	3236	797	1.31
	0.6	3084	838	1.38
	0.8	2955	877	1.44

Horizontal Flow				
Speed Tap	**ESP**	**CFM**	**RPM**	**BHP**
T1	0.2	2102	495	0.36
	0.4	1906	566	0.41
	0.6	-	-	-
	0.8	-	-	-
T2	0.2	2748	571	0.61
	0.4	2554	627	0.67
	0.6	2337	697	0.75
	0.8	2148	750	0.80
T3	0.2	3336	657	0.96
	0.4	3185	696	1.02
	0.6	3029	750	1.10
	0.8	2862	796	1.17
T4	0.2	3539	693	1.13
	0.4	3419	726	1.18
	0.6	3282	773	1.26
	0.8	3132	816	1.33
T5	0.2	3724	732	1.32
	0.4	3647	757	1.37
	0.6	3525	797	1.44
	0.8	3401	836	1.51
T6	0.2	2251	512	0.41
	0.4	2052	579	0.46
	0.6	-	-	-
	0.8	-	-	-
T7	0.2	2784	576	0.63
	0.4	2591	631	0.69
	0.6	2379	699	0.76
	0.8	2190	753	0.82
T8	0.2	3230	639	0.88
	0.4	3066	682	0.94
	0.6	2900	739	1.02
	0.8	2726	787	1.09
T9	0.2	3401	668	1.01
	0.4	3259	705	1.07
	0.6	3109	757	1.15
	0.8	2947	802	1.22
T10	0.2	3552	696	1.14
	0.4	3435	728	1.20
	0.6	3299	774	1.27
	0.8	3151	817	1.34

7.5 Ton • 225 MBH Gas Heat Exchanger • Medium Static Direct Drive

Models: DRG0903LH, DRG0904LH, DRG0907LH

Down Flow				
Speed Tap	**ESP**	**CFM**	**RPM**	**BHP**
T1	0.2	1954	552	0.40
	0.4	-	-	-
	0.6	-	-	-
	0.8	-	-	-
	1.0	-	-	-
	1.2	-	-	-
	1.4	-	-	-
T2	0.2	3059	695	0.95
	0.4	2877	741	1.01
	0.6	2714	788	1.08
	0.8	2558	831	1.14
	1.0	2412	870	1.19
	1.2	2218	922	1.26
	1.4	2028	965	1.32
T3	0.2	3194	716	1.05
	0.4	3010	760	1.11
	0.6	2852	805	1.18
	0.8	2705	847	1.24
	1.0	2542	885	1.30
	1.2	2360	934	1.37
	1.4	-	-	-
T4	0.2	-	-	-
	0.4	3622	874	1.77
	0.6	3458	907	1.83
	0.8	3380	940	1.90
	1.0	3265	975	1.97
	1.2	3138	1008	2.04
	1.4	2994	1043	2.11
T5	0.2	-	-	-
	0.4	3725	901	1.94
	0.6	3549	931	2.00
	0.8	3492	961	2.07
	1.0	3423	996	2.15
	1.2	3307	1026	2.21
	1.4	3180	1059	2.28
T6	0.2	2231	516	0.50
	0.4	2028	649	0.63
	0.6	1835	696	0.68
	0.8	-	-	-
	1.0	-	-	-
	1.2	-	-	-
	1.4	-	-	-
T7	0.2	2987	684	0.90
	0.4	2806	731	0.96
	0.6	2639	779	1.03
	0.8	2479	823	1.09
	1.0	2344	862	1.14
	1.2	2144	915	1.21
	1.4	1953	959	1.27
T8	0.2	3456	761	1.27
	0.4	3264	801	1.34
	0.6	3112	842	1.40
	0.8	2986	881	1.47
	1.0	2812	918	1.53
	1.2	2652	961	1.60
	1.4	2476	1001	1.67
T9	0.2	3569	838	1.66
	0.4	3500	874	1.73
	0.6	3434	910	1.80
	0.8	3325	947	1.87
	1.0	3240	982	1.94
	1.2	3128	1013	2.00
	1.4	3040	1049	2.07
T10	0.2	3893	882	1.99
	0.4	3766	916	2.07
	0.6	3687	945	2.14
	0.8	3584	977	2.21
	1.0	3501	1006	2.28
	1.2	3392	1042	2.36
	1.4	3289	1068	2.42

Horizontal Flow				
Speed Tap	**ESP**	**CFM**	**RPM**	**BHP**
T1	0.2	2102	495	0.36
	0.4	1906	566	0.41
	0.6	-	-	-
	0.8	-	-	-
	1.0	-	-	-
	1.2	-	-	-
	1.4	-	-	-
T2	0.2	3208	636	0.87
	0.4	3043	680	0.93
	0.6	2874	737	1.01
	0.8	2699	785	1.07
	1.0	2519	829	1.13
	1.2	2312	884	1.21
	1.4	2103	948	1.30
T3	0.2	3336	657	0.96
	0.4	3185	696	1.02
	0.6	3029	750	1.10
	0.8	2862	796	1.17
	1.0	2699	840	1.23
	1.2	2509	893	1.31
	1.4	2320	954	1.40
T4	0.2	-	-	-
	0.4	-	-	-
	0.6	-	-	-
	0.8	3693	861	1.74
	1.0	3575	905	1.83
	1.2	3461	941	1.90
	1.4	3345	991	2.00
T5	0.2	-	-	-
	0.4	-	-	-
	0.6	-	-	-
	0.8	-	-	-
	1.0	3737	920	1.98
	1.2	3633	952	2.05
	1.4	3524	999	2.15
T6	0.2	2410	585	0.57
	0.4	2385	610	0.59
	0.6	2243	664	0.65
	0.8	1983	748	0.73
	1.0	-	-	-
	1.2	-	-	-
	1.4	-	-	-
T7	0.2	3139	625	0.83
	0.4	2967	671	0.89
	0.6	2791	730	0.96
	0.8	2613	779	1.03
	1.0	2424	823	1.09
	1.2	2207	880	1.16
	1.4	1987	944	1.25
T8	0.2	3578	701	1.17
	0.4	3467	732	1.22
	0.6	3333	778	1.30
	0.8	3188	820	1.37
	1.0	3051	863	1.44
	1.2	2894	910	1.52
	1.4	2739	967	1.61
T9	0.2	3868	769	1.52
	0.4	3839	787	1.55
	0.6	3727	820	1.62
	0.8	3631	856	1.69
	1.0	3513	900	1.78
	1.2	3394	937	1.85
	1.4	3274	987	1.95
T10	0.2	4122	792	1.79
	0.4	4001	828	1.87
	0.6	3881	865	1.96
	0.8	3800	910	2.06
	1.0	3594	930	2.10
	1.2	3519	974	2.20
	1.4	3391	1007	2.28

7.5 Ton • 225 MBH Gas Heat Exchanger • High Static Direct Drive

Models: DRG0903WH, DRG0904WH, DRG0907WH

Down Flow				
Speed Tap	ESP	CFM	RPM	BHP
T1	0.2	1954	552	0.40
	0.4	-	-	-
	0.6	-	-	-
	0.8	-	-	-
	1.0	-	-	-
	1.2	-	-	-
	1.4	-	-	-
	1.6	-	-	-
	1.8	-	-	-
	2.0	-	-	-
T2	0.2	3527	774	1.34
	0.4	3332	814	1.40
	0.6	3180	853	1.47
	0.8	3061	891	1.54
	1.0	2889	927	1.60
	1.2	2735	969	1.67
	1.4	2563	1008	1.74
	1.6	2392	1050	1.81
	1.8	2237	1086	1.87
	2.0	2077	1119	1.93
T3	0.2	3194	716	1.05
	0.4	3010	760	1.11
	0.6	2852	805	1.18
	0.8	2705	847	1.24
	1.0	2542	885	1.30
	1.2	2360	934	1.37
	1.4	-	-	-
	1.6	-	-	-
	1.8	-	-	-
	2.0	-	-	-
T4	0.2	-	-	-
	0.4	-	-	-
	0.6	3769	961	2.22
	0.8	3645	1000	2.32
	1.0	3496	1042	2.42
	1.2	3398	1073	2.49
	1.4	3293	1099	2.55
	1.6	3065	1137	2.64
	1.8	2958	1163	2.70
	2.0	2810	1208	2.80
T5	0.2	-	-	-
	0.4	-	-	-
	0.6	-	-	-
	0.8	-	-	-
	1.0	3754	1063	2.66
	1.2	3662	1090	2.73
	1.4	3578	1115	2.80
	1.6	3519	1137	2.84
	1.8	3325	1166	2.91
	2.0	3161	1203	3.01
T6	0.2	2569	626	0.66
	0.4	2389	678	0.72
	0.6	2194	732	0.78
	0.8	2015	780	0.83
	1.0	1974	821	0.87
	1.2	-	-	-
	1.4	-	-	-
	1.6	-	-	-
	1.8	-	-	-
	2.0	-	-	-

Horizontal Flow				
Speed Tap	ESP	CFM	RPM	BHP
T1	0.2	2102	495	0.36
	0.4	1906	566	0.41
	0.6	-	-	-
	0.8	-	-	-
	1.0	-	-	-
	1.2	-	-	-
	1.4	-	-	-
	1.6	-	-	-
	1.8	-	-	-
	2.0	-	-	-
T2	0.2	3642	714	1.23
	0.4	3544	743	1.28
	0.6	3415	786	1.36
	0.8	3278	827	1.43
	1.0	3147	870	1.50
	1.2	2998	915	1.58
	1.4	2852	971	1.68
	1.6	2666	1010	1.74
	1.8	2482	1060	1.83
	2.0	2323	1096	1.89
T3	0.2	3336	657	0.96
	0.4	3185	696	1.02
	0.6	3029	750	1.10
	0.8	2862	796	1.17
	1.0	2699	840	1.23
	1.2	2509	893	1.31
	1.4	2320	954	1.40
	1.6	-	-	-
	1.8	-	-	-
	2.0	-	-	-
T4	0.2	-	-	-
	0.4	-	-	-
	0.6	-	-	-
	0.8	-	-	-
	1.0	-	-	-
	1.2	3674	995	2.31
	1.4	3566	1035	2.40
	1.6	3459	1067	2.48
	1.8	3361	1097	2.55
	2.0	3261	1134	2.63
T5	0.2	-	-	-
	0.4	-	-	-
	0.6	-	-	-
	0.8	-	-	-
	1.0	-	-	-
	1.2	-	-	-
	1.4	3795	1047	2.62
	1.6	3706	1077	2.69
	1.8	3641	1114	2.79
	2.0	3565	1145	2.86
T6	0.2	2728	568	0.60
	0.4	2533	625	0.66
	0.6	2314	695	0.74
	0.8	2125	749	0.79
	1.0	1875	792	0.84
	1.2	-	-	-
	1.4	-	-	-
	1.6	-	-	-
	1.8	-	-	-
	2.0	-	-	-

7.5 Ton • 225 MBH Gas Heat Exchanger • High Static Direct Drive

Models: DRG0903WH, DRG0904WH, DRG0907WH

Down Flow				
Speed Tap	**ESP**	**CFM**	**RPM**	**BHP**
T7	0.2	-	-	-
	0.4	3048	766	1.14
	0.6	2892	811	1.21
	0.8	2747	852	1.27
	1.0	2581	890	1.33
	1.2	2402	938	1.40
	1.4	2216	980	1.46
	1.6	2043	1023	1.53
	1.8	1893	1062	1.58
	2.0	-	-	-
T8	0.2	3744	819	1.58
	0.4	3536	854	1.64
	0.6	3378	889	1.71
	0.8	3286	924	1.78
	1.0	3144	960	1.85
	1.2	3009	995	1.92
	1.4	2855	1031	1.99
	1.6	2687	1072	2.06
	1.8	2526	1107	2.13
	2.0	-	-	-
T9	0.2	3998	907	2.14
	0.4	3905	939	2.22
	0.6	3812	972	2.29
	0.8	3693	1005	2.37
	1.0	3617	1041	2.46
	1.2	3539	1069	2.52
	1.4	3478	1098	2.59
	1.6	3376	1127	2.66
	1.8	3271	1162	2.74
	2.0	3111	1208	2.85
T10	0.2	-	-	-
	0.4	-	-	-
	0.6	-	-	-
	0.8	-	-	-
	1.0	4156	1104	3.08
	1.2	4032	1128	3.14
	1.4	3908	1151	3.21
	1.6	3784	1175	3.27
	1.8	3660	1198	3.34
	2.0	3536	1222	3.40

Horizontal Flow				
Speed Tap	**ESP**	**CFM**	**RPM**	**BHP**
T7	0.2	-	-	-
	0.4	-	-	-
	0.6	3074	754	1.13
	0.8	2910	800	1.19
	1.0	2751	843	1.26
	1.2	2566	895	1.34
	1.4	2382	956	1.43
	1.6	2200	998	1.49
	1.8	2005	1047	1.56
	2.0	1836	1083	1.62
T8	0.2	3828	758	1.46
	0.4	3784	778	1.50
	0.6	3669	813	1.57
	0.8	3564	850	1.64
	1.0	3444	894	1.72
	1.2	3320	933	1.80
	1.4	3197	984	1.89
	1.6	3023	1020	1.96
	1.8	2852	1071	2.06
	2.0	2703	1107	2.13
T9	0.2	-	-	-
	0.4	-	-	-
	0.6	4100	872	2.06
	0.8	4086	901	2.12
	1.0	3955	944	2.23
	1.2	3864	970	2.29
	1.4	3758	1013	2.39
	1.6	3659	1042	2.46
	1.8	3525	1096	2.59
	2.0	3406	1132	2.67
T10	0.2	-	-	-
	0.4	-	-	-
	0.6	-	-	-
	0.8	-	-	-
	1.0	-	-	-
	1.2	-	-	-
	1.4	4040	1074	2.99
	1.6	4023	1106	3.08
	1.8	3859	1138	3.17
	2.0	3812	1167	3.25

8.5 Ton • 130 MBH Gas Heat Exchanger • Standard Static Direct Drive

Models: DRG1023DL, DRG1024DL, DRG1027DL

Down Flow				
Speed Tap	**ESP**	**CFM**	**RPM**	**BHP**
T1	0.2	1714	496	0.32
	0.4	-	-	-
	0.6	-	-	-
	0.8	-	-	-
T2	0.2	2365	599	0.61
	0.4	2208	649	0.66
	0.6	2048	695	0.70
	0.8	-	-	-
T3	0.2	2798	671	0.88
	0.4	2687	713	0.93
	0.6	-	-	-
	0.8	-	-	-
T4	0.2	3522	795	1.51
	0.4	3389	828	1.58
	0.6	3240	865	1.65
	0.8	3083	898	1.71
T5	0.2	3830	847	1.83
	0.4	3702	881	1.90
	0.6	3563	915	1.97
	0.8	3399	946	2.04
T6	0.2	1889	528	0.38
	0.4	1827	589	0.43
	0.6	1445	667	0.48
	0.8	-	-	-
T7	0.2	2193	571	0.53
	0.4	2090	635	0.59
	0.6	1959	698	0.64
	0.8	1704	763	0.70
T8	0.2	2489	616	0.69
	0.4	2351	679	0.76
	0.6	2235	729	0.82
	0.8	2050	780	0.87
T9	0.2	2860	679	0.94
	0.4	2699	735	1.02
	0.6	2554	774	1.07
	0.8	2446	817	1.13
T10	0.2	3182	743	1.22
	0.4	3041	788	1.30
	0.6	2953	821	1.35
	0.8	2797	868	1.43

Horizontal Flow				
Speed Tap	**ESP**	**CFM**	**RPM**	**BHP**
T1	0.2	1856	423	0.27
	0.4	-	-	-
	0.6	-	-	-
	0.8	-	-	-
T2	0.2	2671	503	0.51
	0.4	2492	568	0.57
	0.6	2335	628	0.64
	0.8	2027	690	0.70
T3	0.2	3144	564	0.74
	0.4	3005	607	0.79
	0.6	2824	671	0.88
	0.8	2661	722	0.95
T4	0.2	3921	655	1.25
	0.4	3775	700	1.33
	0.6	3630	745	1.42
	0.8	3449	786	1.50
T5	0.2	4210	694	1.49
	0.4	4071	737	1.59
	0.6	3942	777	1.67
	0.8	3746	819	1.76
T6	0.2	2056	443	0.32
	0.4	1887	522	0.38
	0.6	1702	591	0.43
	0.8	1327	707	0.51
T7	0.2	2445	487	0.45
	0.4	2283	556	0.51
	0.6	2098	617	0.57
	0.8	1828	688	0.64
T8	0.2	2760	545	0.61
	0.4	2630	587	0.66
	0.6	2487	641	0.72
	0.8	2264	701	0.79
T9	0.2	3234	581	0.80
	0.4	3043	626	0.87
	0.6	2866	675	0.93
	0.8	2677	729	1.01
T10	0.2	3655	604	0.99
	0.4	3427	663	1.09
	0.6	3210	714	1.17
	0.8	3066	759	1.25

8.5 Ton • 130 MBH Gas Heat Exchanger • Medium Static Direct Drive

Models: DRG1023LL, DRG1024LL, DRG1027LL

Down Flow				
Speed Tap	**ESP**	**CFM**	**RPM**	**BHP**
T1	0.2	1714	496	0.32
	0.4	-	-	-
	0.6	-	-	-
	0.8	-	-	-
	1.0	-	-	-
	1.2	-	-	-
	1.4	-	-	-
T2	0.2	3114	722	1.12
	0.4	2977	761	1.18
	0.6	2825	800	1.24
	0.8	2634	846	1.31
	1.0	2474	878	1.36
	1.2	2236	931	1.44
	1.4	1990	986	1.53
T3	0.2	2798	671	0.88
	0.4	2687	713	0.93
	0.6	-	-	-
	0.8	-	-	-
	1.0	-	-	-
	1.2	-	-	-
	1.4	-	-	-
T4	0.2	3997	874	1.99
	0.4	3869	909	2.07
	0.6	3740	942	2.14
	0.8	3578	975	2.22
	1.0	3417	1009	2.29
	1.2	3257	1039	2.36
	1.4	3091	1069	2.43
T5	0.2	-	-	-
	0.4	4125	958	2.46
	0.6	3997	992	2.55
	0.8	3806	1021	2.63
	1.0	3701	1056	2.72
	1.2	3547	1081	2.78
	1.4	3374	1101	2.83
T6	0.2	1863	520	0.37
	0.4	1748	587	0.42
	0.6	1403	671	0.48
	0.8	-	-	-
	1.0	-	-	-
	1.2	-	-	-
	1.4	-	-	-
T7	0.2	2398	602	0.64
	0.4	2270	665	0.70
	0.6	2161	719	0.76
	0.8	1948	774	0.82
	1.0	1818	821	0.87
	1.2	1520	901	0.95
	1.4	1487	951	1.01
T8	0.2	2398	602	0.64
	0.4	2270	665	0.70
	0.6	2161	719	0.76
	0.8	1948	774	0.82
	1.0	1818	821	0.87
	1.2	-	-	-
	1.4	-	-	-
T9	0.2	3203	753	1.25
	0.4	3097	795	1.32
	0.6	2992	833	1.39
	0.8	2871	874	1.46
	1.0	2716	917	1.53
	1.2	2580	951	1.59
	1.4	2375	1004	1.67
T10	0.2	3879	753	1.72
	0.4	3777	802	1.83
	0.6	3658	923	2.11
	0.8	3532	980	2.24
	1.0	3416	1008	2.30
	1.2	3280	1038	2.37
	1.4	3152	1071	2.45

Horizontal Flow				
Speed Tap	**ESP**	**CFM**	**RPM**	**BHP**
T1	0.2	1856	423	0.27
	0.4	-	-	-
	0.6	-	-	-
	0.8	-	-	-
	1.0	-	-	-
	1.2	-	-	-
	1.4	-	-	-
T2	0.2	3458	603	0.93
	0.4	3292	658	1.02
	0.6	3155	700	1.08
	0.8	3007	747	1.16
	1.0	2844	797	1.23
	1.2	2681	836	1.29
	1.4	2469	885	1.37
T3	0.2	3144	564	0.74
	0.4	3005	607	0.79
	0.6	2824	671	0.88
	0.8	2661	722	0.95
	1.0	-	-	-
	1.2	-	-	-
	1.4	-	-	-
T4	0.2	-	-	-
	0.4	4200	754	1.71
	0.6	4070	791	1.80
	0.8	3879	838	1.91
	1.0	3699	874	1.99
	1.2	3535	923	2.10
	1.4	3341	946	2.15
T5	0.2	-	-	-
	0.4	-	-	-
	0.6	-	-	-
	0.8	4194	863	2.22
	1.0	4012	898	2.31
	1.2	3879	955	2.45
	1.4	3683	967	2.49
T6	0.2	2029	440	0.31
	0.4	1855	519	0.37
	0.6	1666	593	0.42
	0.8	-	-	-
	1.0	-	-	-
	1.2	-	-	-
	1.4	-	-	-
T7	0.2	2645	528	0.56
	0.4	2515	577	0.61
	0.6	2360	634	0.67
	0.8	2137	694	0.74
	1.0	1801	757	0.80
	1.2	1532	814	0.86
	1.4	-	-	-
T8	0.2	2645	528	0.56
	0.4	2515	577	0.61
	0.6	2360	634	0.67
	0.8	2137	694	0.74
	1.0	1801	757	0.80
	1.2	-	-	-
	1.4	-	-	-
T9	0.2	3664	603	1.01
	0.4	3429	666	1.11
	0.6	3240	718	1.20
	0.8	3088	761	1.27
	1.0	2883	808	1.35
	1.2	2651	857	1.43
	1.4	2470	900	1.50
T10	0.2	-	-	-
	0.4	-	-	-
	0.6	-	-	-
	0.8	-	-	-
	1.0	3711	872	1.99
	1.2	3501	907	2.07
	1.4	2986	951	2.17

8.5 Ton • 130 MBH Gas Heat Exchanger • High Static Direct Drive

Models: DRG1023WL, DRG1024WL, DRG1027WL

Down Flow				
Speed Tap	ESP	CFM	RPM	BHP
T1	0.2	1714	496	0.32
	0.4	-	-	-
	0.6	-	-	-
	0.8	-	-	-
	1.0	-	-	-
	1.2	-	-	-
	1.4	-	-	-
	1.6	-	-	-
	1.8	-	-	-
	2.0	-	-	-
T2	0.2	3674	820	1.66
	0.4	3544	853	1.73
	0.6	3402	889	1.80
	0.8	3235	920	1.86
	1.0	3055	956	1.94
	1.2	2891	986	2.00
	1.4	2708	1011	2.05
	1.6	2499	1071	2.17
	1.8	2307	1103	2.23
	2.0	2054	1146	2.32
T3	0.2	2798	671	0.88
	0.4	2687	713	0.93
	0.6	-	-	-
	0.8	-	-	-
	1.0	-	-	-
	1.2	-	-	-
	1.4	-	-	-
	1.6	-	-	-
	1.8	-	-	-
	2.0	-	-	-
T4	0.2	4166	907	2.22
	0.4	4029	939	2.30
	0.6	3906	969	2.37
	0.8	3717	1003	2.45
	1.0	3544	1037	2.54
	1.2	3394	1064	2.60
	1.4	3219	1092	2.67
	1.6	3060	1121	2.74
	1.8	2887	1148	2.81
	2.0	2721	1176	2.88
T5	0.2	-	-	-
	0.4	-	-	-
	0.6	4221	1022	2.85
	0.8	4047	1052	2.93
	1.0	3889	1084	3.02
	1.2	3734	1109	3.09
	1.4	3555	1133	3.16
	1.6	3396	1162	3.24
	1.8	3210	1186	3.30
	2.0	3041	1211	3.37
T6	0.2	2398	602	0.64
	0.4	2270	665	0.70
	0.6	2161	719	0.76
	0.8	1948	774	0.82
	1.0	1818	821	0.87
	1.2	1520	901	0.95
	1.4	-	-	-
	1.6	-	-	-
	1.8	-	-	-
	2.0	-	-	-

Horizontal Flow				
Speed Tap	ESP	CFM	RPM	BHP
T1	0.2	1856	423	0.27
	0.4	-	-	-
	0.6	-	-	-
	0.8	-	-	-
	1.0	-	-	-
	1.2	-	-	-
	1.4	-	-	-
	1.6	-	-	-
	1.8	-	-	-
	2.0	-	-	-
T2	0.2	4061	675	1.37
	0.4	3919	720	1.46
	0.6	3792	761	1.54
	0.8	3610	802	1.62
	1.0	3427	845	1.71
	1.2	3261	894	1.81
	1.4	3042	919	1.86
	1.6	2865	962	1.95
	1.8	2649	1020	2.06
	2.0	2487	1041	2.11
T3	0.2	3144	564	0.74
	0.4	3005	607	0.79
	0.6	2824	671	0.88
	0.8	2661	722	0.95
	1.0	-	-	-
	1.2	-	-	-
	1.4	-	-	-
	1.6	-	-	-
	1.8	-	-	-
	2.0	-	-	-
T4	0.2	-	-	-
	0.4	-	-	-
	0.6	4261	812	1.99
	0.8	4051	849	2.08
	1.0	3857	885	2.17
	1.2	3718	922	2.25
	1.4	3536	957	2.34
	1.6	3369	993	2.43
	1.8	3199	1028	2.52
	2.0	3048	1064	2.60
T5	0.2	-	-	-
	0.4	-	-	-
	0.6	-	-	-
	0.8	-	-	-
	1.0	-	-	-
	1.2	4145	950	2.65
	1.4	3925	986	2.75
	1.6	3783	1018	2.84
	1.8	3606	1051	2.93
	2.0	3415	1085	3.02
T6	0.2	2645	528	0.56
	0.4	2515	577	0.61
	0.6	2360	634	0.67
	0.8	2137	694	0.74
	1.0	1801	757	0.80
	1.2	1532	814	0.86
	1.4	-	-	-
	1.6	-	-	-
	1.8	-	-	-
	2.0	-	-	-

8.5 Ton • 130 MBH Gas Heat Exchanger • High Static Direct Drive

Models: DRG1023WL, DRG1024WL, DRG1027WL

Down Flow				
Speed Tap	**ESP**	**CFM**	**RPM**	**BHP**
T7	0.2	-	-	-
	0.4	2729	741	1.06
	0.6	2574	789	1.13
	0.8	2447	824	1.18
	1.0	2310	847	1.21
	1.2	2126	857	1.22
	1.4	1858	948	1.35
	1.6	1746	1021	1.46
	1.8	1577	1075	1.54
	2.0	1420	1111	1.59
T8	0.2	2947	695	1.01
	0.4	2787	749	1.09
	0.6	2649	786	1.14
	0.8	2539	829	1.20
	1.0	2287	872	1.26
	1.2	2202	917	1.33
	1.4	1896	972	1.41
	1.6	-	-	-
	1.8	-	-	-
	2.0	-	-	-
T9	0.2	3704	751	1.59
	0.4	3606	786	1.67
	0.6	3491	903	1.92
	0.8	3366	951	2.02
	1.0	3247	981	2.08
	1.2	3108	1015	2.15
	1.4	2970	1050	2.23
	1.6	2833	1082	2.30
	1.8	2661	1117	2.37
	2.0	2477	1179	2.50
T10	0.2	-	-	-
	0.4	-	-	-
	0.6	-	-	-
	0.8	-	-	-
	1.0	3867	1078	3.00
	1.2	3743	1109	3.09
	1.4	3606	1138	3.17
	1.6	3474	1165	3.25
	1.8	3340	1193	3.32
	2.0	3204	1219	3.40

Horizontal Flow				
Speed Tap	**ESP**	**CFM**	**RPM**	**BHP**
T7	0.2	-	-	-
	0.4	-	-	-
	0.6	-	-	-
	0.8	2767	734	1.05
	1.0	2539	781	1.12
	1.2	2280	837	1.20
	1.4	2083	892	1.27
	1.6	1834	946	1.35
	1.8	1477	1014	1.45
	2.0	-	-	-
T8	0.2	3354	587	0.85
	0.4	3145	635	0.92
	0.6	2952	685	0.99
	0.8	2776	736	1.07
	1.0	2573	785	1.14
	1.2	2318	840	1.22
	1.4	2119	896	1.30
	1.6	1875	950	1.38
	1.8	-	-	-
	2.0	-	-	-
T9	0.2	-	-	-
	0.4	-	-	-
	0.6	-	-	-
	0.8	3761	817	1.73
	1.0	3588	854	1.81
	1.2	3342	894	1.90
	1.4	3145	938	1.99
	1.6	2888	981	2.08
	1.8	2688	1022	2.17
	2.0	2433	1065	2.26
T10	0.2	-	-	-
	0.4	-	-	-
	0.6	-	-	-
	0.8	-	-	-
	1.0	-	-	-
	1.2	-	-	-
	1.4	-	-	-
	1.6	3767	1022	2.85
	1.8	3581	1060	2.95
	2.0	3370	1096	3.05

8.5 Ton • 180 MBH Gas Heat Exchanger • Standard Static Direct Drive

Models: DRG1023DM, DRG1024DM, DRG1027DM

Down Flow				
Speed Tap	**ESP**	**CFM**	**RPM**	**BHP**
T1	0.2	1902	520	0.37
	0.4	-	-	-
	0.6	-	-	-
	0.8	-	-	-
T2	0.2	2365	599	0.61
	0.4	2208	649	0.66
	0.6	2048	695	0.70
	0.8	1892	736	0.74
T3	0.2	3026	709	1.06
	0.4	2905	748	1.11
	0.6	2735	788	1.17
	0.8	2593	831	1.24
T4	0.2	3522	795	1.51
	0.4	3389	828	1.58
	0.6	3240	865	1.65
	0.8	3083	898	1.71
T5	0.2	3830	847	1.83
	0.4	3702	881	1.90
	0.6	3563	915	1.97
	0.8	3399	946	2.04
T6	0.2	1539	469	0.27
	0.4	1317	556	0.31
	0.6	994	634	0.36
	0.8	-	-	-
T7	0.2	2327	591	0.60
	0.4	2207	655	0.66
	0.6	2098	712	0.72
	0.8	1865	770	0.78
T8	0.2	2266	588	0.56
	0.4	2126	638	0.61
	0.6	1989	694	0.66
	0.8	1747	765	0.73
T9	0.2	2743	658	0.85
	0.4	2585	717	0.93
	0.6	2443	759	0.99
	0.8	-	-	-
T10	0.2	3182	743	1.22
	0.4	3041	788	1.30
	0.6	2953	821	1.35
	0.8	2797	868	1.43

Horizontal Flow				
Speed Tap	**ESP**	**CFM**	**RPM**	**BHP**
T1	0.2	2029	440	0.31
	0.4	-	-	-
	0.6	-	-	-
	0.8	-	-	-
T2	0.2	2671	503	0.51
	0.4	2492	568	0.57
	0.6	2335	628	0.64
	0.8	2027	690	0.70
T3	0.2	3391	593	0.88
	0.4	3245	641	0.95
	0.6	3095	693	1.03
	0.8	2948	739	1.10
T4	0.2	3921	655	1.25
	0.4	3775	700	1.33
	0.6	3630	745	1.42
	0.8	3449	786	1.50
T5	0.2	4210	694	1.49
	0.4	4071	737	1.59
	0.6	3942	777	1.67
	0.8	3746	819	1.76
T6	0.2	1650	405	0.23
	0.4	1369	515	0.29
	0.6	1105	589	0.33
	0.8	-	-	-
T7	0.2	2571	513	0.52
	0.4	2433	570	0.58
	0.6	2261	630	0.64
	0.8	2042	690	0.70
T8	0.2	2491	493	0.47
	0.4	2318	560	0.53
	0.6	2125	625	0.60
	0.8	1918	683	0.65
T9	0.2	3073	572	0.74
	0.4	2909	613	0.80
	0.6	2751	663	0.86
	0.8	2547	719	0.93
T10	0.2	3655	604	0.99
	0.4	3427	663	1.09
	0.6	3210	714	1.17
	0.8	3066	759	1.25

8.5 Ton • 180 MBH Gas Heat Exchanger • Medium Static Direct Drive

Models: DRG1023LM, DRG1024LM, DRG1027LM

Down Flow				
Speed Tap	**ESP**	**CFM**	**RPM**	**BHP**
T1	0.2	1863	520	0.37
	0.4	-	-	-
	0.6	-	-	-
	0.8	-	-	-
	1.0	-	-	-
	1.2	-	-	-
	1.4	-	-	-
T2	0.2	3114	722	1.12
	0.4	2977	761	1.18
	0.6	2825	800	1.24
	0.8	2634	846	1.31
	1.0	2474	878	1.36
	1.2	2236	931	1.44
	1.4	1990	986	1.53
T3	0.2	3026	709	1.06
	0.4	2905	748	1.11
	0.6	2735	788	1.17
	0.8	2593	831	1.24
	1.0	-	-	-
	1.2	-	-	-
	1.4	-	-	-
T4	0.2	3997	874	1.99
	0.4	3869	909	2.07
	0.6	3740	942	2.14
	0.8	3578	975	2.22
	1.0	3417	1009	2.29
	1.2	3257	1039	2.36
	1.4	3091	1069	2.43
T5	0.2	-	-	-
	0.4	4125	958	2.46
	0.6	3997	992	2.55
	0.8	3806	1021	2.63
	1.0	3701	1056	2.72
	1.2	3547	1081	2.78
	1.4	3374	1101	2.83
T6	0.2	2137	563	0.50
	0.4	2041	626	0.56
	0.6	1888	692	0.61
	0.8	-	-	-
	1.0	-	-	-
	1.2	-	-	-
	1.4	-	-	-
T7	0.2	2948	681	0.97
	0.4	2729	741	1.06
	0.6	2574	789	1.13
	0.8	2447	824	1.18
	1.0	2310	847	1.21
	1.2	2126	857	1.22
	1.4	1858	948	1.35
T8	0.2	3256	760	1.30
	0.4	3128	802	1.37
	0.6	3059	834	1.42
	0.8	2885	884	1.51
	1.0	2779	916	1.6
	1.2	2619	955	1.63
	1.4	2449	1000	1.71
T9	0.2	3571	777	1.55
	0.4	3475	815	1.63
	0.6	3364	887	1.77
	0.8	3239	920	1.84
	1.0	3115	957	1.91
	1.2	2974	997	2.00
	1.4	2825	1031	2.06
T10	0.2	3879	753	1.72
	0.4	3777	802	1.83
	0.6	3658	923	2.11
	0.8	3532	980	2.24
	1.0	3416	1008	2.30
	1.2	3280	1038	2.37
	1.4	3152	1071	2.45

Horizontal Flow				
Speed Tap	**ESP**	**CFM**	**RPM**	**BHP**
T1	0.2	2029	440	0.31
	0.4	1855	519	0.37
	0.6	-	-	-
	0.8	-	-	-
	1.0	-	-	-
	1.2	-	-	-
	1.4	-	-	-
T2	0.2	3458	603	0.93
	0.4	3292	658	1.02
	0.6	3155	700	1.08
	0.8	3007	747	1.16
	1.0	2844	797	1.23
	1.2	2681	836	1.29
	1.4	2469	885	1.37
T3	0.2	3391	593	0.88
	0.4	3245	641	0.95
	0.6	3095	693	1.03
	0.8	2948	739	1.10
	1.0	2789	789	1.17
	1.2	2614	847	1.26
	1.4	-	-	-
T4	0.2	-	-	-
	0.4	4200	754	1.71
	0.6	4070	791	1.80
	0.8	3879	838	1.91
	1.0	3699	874	1.99
	1.2	3535	923	2.10
	1.4	3341	946	2.15
T5	0.2	-	-	-
	0.4	-	-	-
	0.6	-	-	-
	0.8	4194	863	2.22
	1.0	4012	898	2.31
	1.2	3879	955	2.45
	1.4	3683	967	2.49
T6	0.2	2382	479	0.42
	0.4	2229	549	0.49
	0.6	2053	611	0.54
	0.8	-	-	-
	1.0	-	-	-
	1.2	-	-	-
	1.4	-	-	-
T7	0.2	3346	591	0.84
	0.4	3123	632	0.90
	0.6	2931	681	0.97
	0.8	2767	734	1.05
	1.0	2539	781	1.12
	1.2	2280	837	1.20
	1.4	2083	892	1.27
T8	0.2	3734	613	1.05
	0.4	3520	673	1.15
	0.6	3311	723	1.24
	0.8	3172	767	1.31
	1.0	2951	811	1.39
	1.2	2724	859	1.47
	1.4	2547	909	1.55
T9	0.2	3992	669	1.34
	0.4	3881	710	1.42
	0.6	3776	756	1.51
	0.8	3631	804	1.61
	1.0	3474	841	1.68
	1.2	3329	884	1.77
	1.4	3125	928	1.86
T10	0.2	4350	708	1.62
	0.4	4212	747	1.71
	0.6	4054	789	1.80
	0.8	3912	834	1.91
	1.0	3711	872	1.99
	1.2	3501	907	2.07
	1.4	2986	951	2.17

8.5 Ton • 180 MBH Gas Heat Exchanger • High Static Direct Drive

Models: DRG1023WM, DRG1024WM, DRG1027WM

Down Flow				
Speed Tap	ESP	CFM	RPM	BHP
T1	0.2	1863	520	0.37
	0.4	-	-	-
	0.6	-	-	-
	0.8	-	-	-
	1.0	-	-	-
	1.2	-	-	-
	1.4	-	-	-
	1.6	-	-	-
	1.8	-	-	-
	2.0	-	-	-
T2	0.2	3674	820	1.66
	0.4	3544	853	1.73
	0.6	3402	889	1.80
	0.8	3235	920	1.86
	1.0	3055	956	1.94
	1.2	2891	986	2.00
	1.4	2708	1011	2.05
	1.6	2499	1071	2.17
	1.8	2307	1103	2.23
	2.0	2054	1146	2.32
T3	0.2	3026	709	1.06
	0.4	2905	748	1.11
	0.6	2735	788	1.17
	0.8	2593	831	1.24
	1.0	-	-	-
	1.2	-	-	-
	1.4	-	-	-
	1.6	-	-	-
	1.8	-	-	-
	2.0	-	-	-
T4	0.2	4166	907	2.22
	0.4	4029	939	2.30
	0.6	3906	969	2.37
	0.8	3717	1003	2.45
	1.0	3544	1037	2.54
	1.2	3394	1064	2.60
	1.4	3219	1092	2.67
	1.6	3060	1121	2.74
	1.8	2887	1148	2.81
	2.0	2721	1176	2.88
T5	0.2	-	-	-
	0.4	-	-	-
	0.6	4221	1022	2.85
	0.8	4047	1052	2.93
	1.0	3889	1084	3.02
	1.2	3734	1109	3.09
	1.4	3555	1133	3.16
	1.6	3396	1162	3.24
	1.8	3210	1186	3.30
	2.0	3041	1211	3.37
T6	0.2	2464	612	0.68
	0.4	2329	675	0.75
	0.6	2215	727	0.80
	0.8	2022	778	0.86
	1.0	-	-	-
	1.2	-	-	-
	1.4	-	-	-
	1.6	-	-	-
	1.8	-	-	-
	2.0	-	-	-

Horizontal Flow				
Speed Tap	ESP	CFM	RPM	BHP
T1	0.2	2029	440	0.31
	0.4	1855	519	0.37
	0.6	-	-	-
	0.8	-	-	-
	1.0	-	-	-
	1.2	-	-	-
	1.4	-	-	-
	1.6	-	-	-
	1.8	-	-	-
	2.0	-	-	-
T2	0.2	4061	675	1.37
	0.4	3919	720	1.46
	0.6	3792	761	1.54
	0.8	3610	802	1.62
	1.0	3427	845	1.71
	1.2	3261	894	1.81
	1.4	3042	919	1.86
	1.6	2865	962	1.95
	1.8	2649	1020	2.06
	2.0	2487	1041	2.11
T3	0.2	3391	593	0.88
	0.4	3245	641	0.95
	0.6	3095	693	1.03
	0.8	2948	739	1.10
	1.0	2789	789	1.17
	1.2	2614	847	1.26
	1.4	-	-	-
	1.6	-	-	-
	1.8	-	-	-
	2.0	-	-	-
T4	0.2	-	-	-
	0.4	-	-	-
	0.6	-	-	-
	0.8	4051	849	2.08
	1.0	3857	885	2.17
	1.2	3718	922	2.25
	1.4	3536	957	2.34
	1.6	3369	993	2.43
	1.8	3199	1028	2.52
	2.0	3048	1064	2.60
T5	0.2	-	-	-
	0.4	-	-	-
	0.6	-	-	-
	0.8	-	-	-
	1.0	-	-	-
	1.2	4145	950	2.65
	1.4	3925	986	2.75
	1.6	3783	1018	2.84
	1.8	3606	1051	2.93
	2.0	3415	1085	3.02
T6	0.2	2719	539	0.60
	0.4	2590	584	0.64
	0.6	2444	638	0.70
	0.8	2221	699	0.77
	1.0	1930	759	0.84
	1.2	-	-	-
	1.4	-	-	-
	1.6	-	-	-
	1.8	-	-	-
	2.0	-	-	-

8.5 Ton • 180 MBH Gas Heat Exchanger • High Static Direct Drive

Models: DRG1023WM, DRG1024WM, DRG1027WM

Down Flow				
Speed Tap	**ESP**	**CFM**	**RPM**	**BHP**
T7	0.2	3302	768	1.35
	0.4	3209	847	1.49
	0.6	3103	851	1.50
	0.8	2979	886	1.56
	1.0	2840	930	1.64
	1.2	2696	964	1.70
	1.4	2513	1027	1.81
	1.6	2312	1039	1.83
	1.8	2123	1102	1.94
	2.0	1895	1155	2.03
T8	0.2	3392	853	1.57
	0.4	3298	852	1.57
	0.6	3191	864	1.59
	0.8	3066	864	1.59
	1.0	2933	915	1.68
	1.2	2790	975	1.79
	1.4	2620	1002	1.84
	1.6	-	-	-
	1.8	-	-	-
	2.0	-	-	-
T9	0.2	3912	757	1.75
	0.4	3808	816	1.89
	0.6	3689	927	2.15
	0.8	3562	984	2.28
	1.0	3447	1012	2.35
	1.2	3312	1042	2.41
	1.4	3185	1075	2.49
	1.6	3063	1106	2.56
	1.8	2903	1126	2.61
	2.0	2773	1181	2.74
T10	0.2	4380	941	2.62
	0.4	4256	977	2.72
	0.6	4126	1012	2.82
	0.8	3991	1046	2.91
	1.0	3867	1078	3.00
	1.2	3743	1109	3.09
	1.4	3606	1138	3.17
	1.6	3474	1165	3.25
	1.8	3340	1193	3.32
	2.0	3204	1219	3.40

Horizontal Flow				
Speed Tap	**ESP**	**CFM**	**RPM**	**BHP**
T7	0.2	3734	626	1.10
	0.4	3574	679	1.20
	0.6	3431	729	1.28
	0.8	3283	775	1.37
	1.0	3115	817	1.44
	1.2	2941	865	1.52
	1.4	2747	908	1.60
	1.6	2425	958	1.69
	1.8	2211	1011	1.78
	2.0	1860	1086	1.91
T8	0.2	3835	638	1.17
	0.4	3695	691	1.27
	0.6	3544	739	1.36
	0.8	3402	784	1.44
	1.0	3228	826	1.52
	1.2	3034	870	1.60
	1.4	2840	920	1.69
	1.6	2615	962	1.77
	1.8	-	-	-
	2.0	-	-	-
T9	0.2	4388	712	1.65
	0.4	4245	751	1.74
	0.6	4081	792	1.84
	0.8	3940	837	1.94
	1.0	3734	875	2.03
	1.2	3539	910	2.11
	1.4	3317	953	2.21
	1.6	3092	995	2.31
	1.8	2880	1030	2.39
	2.0	2653	1068	2.48
T10	0.2	4802	776	2.16
	0.4	4695	811	2.26
	0.6	4585	847	2.36
	0.8	4462	883	2.46
	1.0	4315	922	2.57
	1.2	4153	952	2.65
	1.4	3975	989	2.76
	1.6	3767	1022	2.85
	1.8	3581	1060	2.95
	2.0	3370	1096	3.05

8.5 Ton • 225 MBH Gas Heat Exchanger • Standard Static Direct Drive

Models: DRG1023DH, DRG1024DH, DRG1027DH

Down Flow				
Speed Tap	**ESP**	**CFM**	**RPM**	**BHP**
T1	0.2	1902	520	0.37
	0.4	-	-	-
	0.6	-	-	-
	0.8	-	-	-
T2	0.2	2365	599	0.61
	0.4	2208	649	0.66
	0.6	2048	695	0.70
	0.8	1892	736	0.74
T3	0.2	3026	709	1.06
	0.4	2905	748	1.11
	0.6	2735	788	1.17
	0.8	2593	831	1.24
T4	0.2	3522	795	1.51
	0.4	3389	828	1.58
	0.6	3240	865	1.65
	0.8	3083	898	1.71
T5	0.2	3830	847	1.83
	0.4	3702	881	1.90
	0.6	3563	915	1.97
	0.8	3399	946	2.04
T6	0.2	2024	546	0.44
	0.4	1928	606	0.48
	0.6	-	-	-
	0.8	-	-	-
T7	0.2	2398	602	0.64
	0.4	2270	665	0.70
	0.6	2161	719	0.76
	0.8	1948	774	0.82
T8	0.2	2774	663	0.88
	0.4	2615	722	0.95
	0.6	2471	763	1.01
	0.8	-	-	-
T9	0.2	2988	703	1.04
	0.4	2829	756	1.12
	0.6	2697	792	1.17
	0.8	2583	835	1.24
T10	0.2	3182	743	1.22
	0.4	3041	788	1.30
	0.6	2953	821	1.35
	0.8	2797	868	1.43

Horizontal Flow				
Speed Tap	**ESP**	**CFM**	**RPM**	**BHP**
T1	0.2	2029	440	0.31
	0.4	-	-	-
	0.6	-	-	-
	0.8	-	-	-
T2	0.2	2671	503	0.51
	0.4	2492	568	0.57
	0.6	2335	628	0.64
	0.8	2027	690	0.70
T3	0.2	3391	593	0.88
	0.4	3245	641	0.95
	0.6	3095	693	1.03
	0.8	2948	739	1.10
T4	0.2	3921	655	1.25
	0.4	3775	700	1.33
	0.6	3630	745	1.42
	0.8	3449	786	1.50
T5	0.2	4210	694	1.49
	0.4	4071	737	1.59
	0.6	3942	777	1.67
	0.8	3746	819	1.76
T6	0.2	2216	459	0.37
	0.4	2066	533	0.43
	0.6	1894	599	0.48
	0.8	-	-	-
T7	0.2	2645	528	0.56
	0.4	2515	577	0.61
	0.6	2360	634	0.67
	0.8	2137	694	0.74
T8	0.2	3116	575	0.76
	0.4	2944	616	0.81
	0.6	2782	666	0.88
	0.8	2582	722	0.95
T9	0.2	3410	589	0.87
	0.4	3193	640	0.95
	0.6	2993	690	1.02
	0.8	2823	740	1.10
T10	0.2	3655	604	0.99
	0.4	3427	663	1.09
	0.6	3210	714	1.17
	0.8	3066	759	1.25

8.5 Ton • 225 MBH Gas Heat Exchanger • Medium Static Direct Drive

Models: DRG1023LH, DRG1024LH, DRG1027LH

Down Flow				
Speed Tap	**ESP**	**CFM**	**RPM**	**BHP**
T1	0.2	1863	520	0.37
	0.4	-	-	-
	0.6	-	-	-
	0.8	-	-	-
	1.0	-	-	-
	1.2	-	-	-
	1.4	-	-	-
T2	0.2	3114	722	1.12
	0.4	2977	761	1.18
	0.6	2825	800	1.24
	0.8	2634	846	1.31
	1.0	2474	878	1.36
	1.2	2236	931	1.44
	1.4	1990	986	1.53
T3	0.2	3026	709	1.06
	0.4	2905	748	1.11
	0.6	2735	788	1.17
	0.8	2593	831	1.24
	1.0	-	-	-
	1.2	-	-	-
	1.4	-	-	-
T4	0.2	3997	874	1.99
	0.4	3869	909	2.07
	0.6	3740	942	2.14
	0.8	3578	975	2.22
	1.0	3417	1009	2.29
	1.2	3257	1039	2.36
	1.4	3091	1069	2.43
T5	0.2	-	-	-
	0.4	4125	958	2.46
	0.6	3997	992	2.55
	0.8	3806	1021	2.63
	1.0	3701	1056	2.72
	1.2	3547	1081	2.78
	1.4	3374	1101	2.83
T6	0.2	2202	572	0.53
	0.4	2098	636	0.59
	0.6	1969	698	0.65
	0.8	-	-	-
	1.0	-	-	-
	1.2	-	-	-
	1.4	-	-	-
T7	0.2	2948	681	0.97
	0.4	2729	741	1.06
	0.6	2574	789	1.13
	0.8	2447	824	1.18
	1.0	2310	847	1.21
	1.2	2126	857	1.22
	1.4	1858	948	1.35
T8	0.2	3256	760	1.30
	0.4	3128	802	1.37
	0.6	3059	834	1.42
	0.8	2885	884	1.51
	1.0	2779	916	1.6
	1.2	2619	955	1.63
	1.4	2449	1000	1.71
T9	0.2	3571	777	1.55
	0.4	3475	815	1.63
	0.6	3364	887	1.77
	0.8	3239	920	1.84
	1.0	3115	957	1.91
	1.2	2974	997	2.00
	1.4	2825	1031	2.06
T10	0.2	3879	753	1.72
	0.4	3777	802	1.83
	0.6	3658	923	2.11
	0.8	3532	980	2.24
	1.0	3416	1008	2.30
	1.2	3280	1038	2.37
	1.4	3152	1071	2.45

Horizontal Flow				
Speed Tap	**ESP**	**CFM**	**RPM**	**BHP**
T1	0.2	2029	440	0.31
	0.4	1855	519	0.37
	0.6	-	-	-
	0.8	-	-	-
	1.0	-	-	-
	1.2	-	-	-
	1.4	-	-	-
T2	0.2	3458	603	0.93
	0.4	3292	658	1.02
	0.6	3155	700	1.08
	0.8	3007	747	1.16
	1.0	2844	797	1.23
	1.2	2681	836	1.29
	1.4	2469	885	1.37
T3	0.2	3391	593	0.88
	0.4	3245	641	0.95
	0.6	3095	693	1.03
	0.8	2948	739	1.10
	1.0	2789	789	1.17
	1.2	2614	847	1.26
	1.4	-	-	-
T4	0.2	-	-	-
	0.4	4200	754	1.71
	0.6	4070	791	1.80
	0.8	3879	838	1.91
	1.0	3699	874	1.99
	1.2	3535	923	2.10
	1.4	3341	946	2.15
T5	0.2	-	-	-
	0.4	-	-	-
	0.6	-	-	-
	0.8	4194	863	2.22
	1.0	4012	898	2.31
	1.2	3879	955	2.45
	1.4	3683	967	2.49
T6	0.2	2455	488	0.45
	0.4	2291	558	0.52
	0.6	2105	618	0.57
	0.8	1842	688	0.64
	1.0	-	-	-
	1.2	-	-	-
	1.4	-	-	-
T7	0.2	-	-	-
	0.4	3123	632	0.90
	0.6	2931	681	0.97
	0.8	2767	734	1.05
	1.0	2539	781	1.12
	1.2	2280	837	1.20
	1.4	2083	892	1.27
T8	0.2	3734	613	1.05
	0.4	3520	673	1.15
	0.6	3311	723	1.24
	0.8	3172	767	1.31
	1.0	2951	811	1.39
	1.2	2724	859	1.47
	1.4	2547	909	1.55
T9	0.2	3992	669	1.34
	0.4	3881	710	1.42
	0.6	3776	756	1.51
	0.8	3631	804	1.61
	1.0	3474	841	1.68
	1.2	3329	884	1.77
	1.4	3125	928	1.86
T10	0.2	-	-	-
	0.4	-	-	-
	0.6	4054	789	1.80
	0.8	3912	834	1.91
	1.0	3711	872	1.99
	1.2	3501	907	2.07
	1.4	2986	951	2.17

8.5 Ton • 225 MBH Gas Heat Exchanger • High Static Direct Drive

Models: DRG1023WH, DRG1024WH, DRG1027WH

Down Flow				
Speed Tap	ESP	CFM	RPM	BHP
T1	0.2	1863	520	0.37
	0.4	-	-	-
	0.6	-	-	-
	0.8	-	-	-
	1.0	-	-	-
	1.2	-	-	-
	1.4	-	-	-
	1.6	-	-	-
	1.8	-	-	-
	2.0	-	-	-
T2	0.2	3674	820	1.66
	0.4	3544	853	1.73
	0.6	3402	889	1.80
	0.8	3235	920	1.86
	1.0	3055	956	1.94
	1.2	2891	986	2.00
	1.4	2708	1011	2.05
	1.6	2499	1071	2.17
	1.8	2307	1103	2.23
	2.0	2054	1146	2.32
T3	0.2	3026	709	1.06
	0.4	2905	748	1.11
	0.6	2735	788	1.17
	0.8	2593	831	1.24
	1.0	-	-	-
	1.2	-	-	-
	1.4	-	-	-
	1.6	-	-	-
	1.8	-	-	-
	2.0	-	-	-
T4	0.2	4166	907	2.22
	0.4	4029	939	2.30
	0.6	3906	969	2.37
	0.8	3717	1003	2.45
	1.0	3544	1037	2.54
	1.2	3394	1064	2.60
	1.4	3219	1092	2.67
	1.6	3060	1121	2.74
	1.8	2887	1148	2.81
	2.0	2721	1176	2.88
T5	0.2	-	-	-
	0.4	-	-	-
	0.6	4221	1022	2.85
	0.8	4047	1052	2.93
	1.0	3889	1084	3.02
	1.2	3734	1109	3.09
	1.4	3555	1133	3.16
	1.6	3396	1162	3.24
	1.8	3210	1186	3.30
	2.0	3041	1211	3.37
T6	0.2	2522	621	0.71
	0.4	2381	684	0.78
	0.6	2261	733	0.84
	0.8	2087	783	0.89
	1.0	-	-	-
	1.2	-	-	-
	1.4	-	-	-
	1.6	-	-	-
	1.8	-	-	-
	2.0	-	-	-

Horizontal Flow				
Speed Tap	ESP	CFM	RPM	BHP
T1	0.2	2029	440	0.31
	0.4	1855	519	0.37
	0.6	-	-	-
	0.8	-	-	-
	1.0	-	-	-
	1.2	-	-	-
	1.4	-	-	-
	1.6	-	-	-
	1.8	-	-	-
	2.0	-	-	-
T2	0.2	4061	675	1.37
	0.4	3919	720	1.46
	0.6	3792	761	1.54
	0.8	3610	802	1.62
	1.0	3427	845	1.71
	1.2	3261	894	1.81
	1.4	3042	919	1.86
	1.6	2865	962	1.95
	1.8	2649	1020	2.06
	2.0	2487	1041	2.11
T3	0.2	3391	593	0.88
	0.4	3245	641	0.95
	0.6	3095	693	1.03
	0.8	2948	739	1.10
	1.0	2789	789	1.17
	1.2	2614	847	1.26
	1.4	-	-	-
	1.6	-	-	-
	1.8	-	-	-
	2.0	-	-	-
T4	0.2	-	-	-
	0.4	-	-	-
	0.6	-	-	-
	0.8	4051	849	2.08
	1.0	3857	885	2.17
	1.2	3718	922	2.25
	1.4	3536	957	2.34
	1.6	3369	993	2.43
	1.8	3199	1028	2.52
	2.0	3048	1064	2.60
T5	0.2	-	-	-
	0.4	-	-	-
	0.6	-	-	-
	0.8	-	-	-
	1.0	-	-	-
	1.2	4145	950	2.65
	1.4	3925	986	2.75
	1.6	3783	1018	2.84
	1.8	3606	1051	2.93
	2.0	3415	1085	3.02
T6	0.2	2787	548	0.63
	0.4	2656	590	0.67
	0.6	2514	643	0.73
	0.8	2292	703	0.80
	1.0	2032	762	0.87
	1.2	-	-	-
	1.4	-	-	-
	1.6	-	-	-
	1.8	-	-	-
	2.0	-	-	-

8.5 Ton • 225 MBH Gas Heat Exchanger • High Static Direct Drive

Models: DRG1023WM, DRG1024WM, DRG1027WM

Down Flow				
Speed Tap	ESP	CFM	RPM	BHP
T7	0.2	-	-	-
	0.4	-	-	-
	0.6	3103	851	1.50
	0.8	2979	886	1.56
	1.0	2840	930	1.64
	1.2	2696	964	1.70
	1.4	2513	1027	1.81
	1.6	2312	1039	1.83
	1.8	2123	1102	1.94
	2.0	1895	1155	2.03
T8	0.2	3531	789	1.55
	0.4	3436	825	1.62
	0.6	3325	882	1.73
	0.8	3201	910	1.79
	1.0	3075	948	1.86
	1.2	2934	992	1.95
	1.4	2780	1025	2.01
	1.6	2620	1063	2.09
	1.8	2441	1111	2.18
	2.0	-	-	-
T9	0.2	3999	765	1.82
	0.4	3878	856	2.04
	0.6	3755	928	2.21
	0.8	3630	990	2.36
	1.0	3505	1020	2.43
	1.2	3378	1051	2.50
	1.4	3246	1083	2.58
	1.6	3113	1114	2.65
	1.8	2981	1138	2.71
	2.0	2846	1172	2.79
T10	0.2	-	-	-
	0.4	-	-	-
	0.6	4126	1012	2.82
	0.8	3991	1046	2.91
	1.0	3867	1078	3.00
	1.2	3743	1109	3.09
	1.4	3606	1138	3.17
	1.6	3474	1165	3.25
	1.8	3340	1193	3.32
	2.0	3204	1219	3.40

Horizontal Flow				
Speed Tap	ESP	CFM	RPM	BHP
T7	0.2	-	-	-
	0.4	-	-	-
	0.6	-	-	-
	0.8	-	-	-
	1.0	3115	817	1.44
	1.2	2941	865	1.52
	1.4	2747	908	1.60
	1.6	2425	958	1.69
	1.8	2211	1011	1.78
	2.0	1860	1086	1.91
T8	0.2	3949	663	1.30
	0.4	3837	705	1.39
	0.6	3733	752	1.48
	0.8	3588	800	1.57
	1.0	3433	837	1.65
	1.2	3129	881	1.73
	1.4	3097	925	1.82
	1.6	2817	970	1.90
	1.8	2577	1016	2.00
	2.0	-	-	-
T9	0.2	-	-	-
	0.4	-	-	-
	0.6	4157	801	1.91
	0.8	4013	842	2.01
	1.0	3816	885	2.11
	1.2	3618	913	2.17
	1.4	3417	958	2.28
	1.6	3179	997	2.37
	1.8	2971	1036	2.47
	2.0	2740	1075	2.56
T10	0.2	-	-	-
	0.4	-	-	-
	0.6	-	-	-
	0.8	-	-	-
	1.0	-	-	-
	1.2	4153	952	2.65
	1.4	3975	989	2.76
	1.6	3767	1022	2.85
	1.8	3581	1060	2.95
	2.0	3370	1096	3.05

10 Ton • 130 MBH Gas Heat Exchanger • Standard Static Direct Drive

Models: DRG1203DL, DRG1204DL, DRG1207DL

Down Flow				
Speed Tap	ESP	CFM	RPM	BHP
T1	0.2	2255	553	0.42
	0.4	-	-	-
	0.6	-	-	-
	0.8	-	-	-
T2	0.2	2910	654	0.78
	0.4	2702	687	0.82
	0.6	2410	753	0.90
	0.8	2250	827	0.98
T3	0.2	3293	675	1.04
	0.4	3137	725	1.12
	0.6	3010	766	1.19
	0.8	-	-	-
T4	0.2	3940	774	1.62
	0.4	3827	812	1.70
	0.6	3696	850	1.78
	0.8	3571	892	1.87
T5	0.2	4126	802	1.82
	0.4	4022	838	1.91
	0.6	3889	877	1.99
	0.8	3808	908	2.07
T6	0.2	1756	460	0.24
	0.4	1547	535	0.29
	0.6	1338	599	0.34
	0.8	-	-	-
T7	0.2	2111	508	0.38
	0.4	1917	575	0.43
	0.6	1742	634	0.48
	0.8	1585	688	0.52
T8	0.2	2443	554	0.53
	0.4	2264	612	0.58
	0.6	2109	669	0.64
	0.8	-	-	-
T9	0.2	3440	692	1.12
	0.4	3308	734	1.19
	0.6	3158	782	1.27
	0.8	3012	827	1.34
T10	0.2	3575	710	1.23
	0.4	3469	749	1.29
	0.6	3293	798	1.38
	0.8	3170	840	1.45

Horizontal Flow				
Speed Tap	ESP	CFM	RPM	BHP
T1	0.2	2267	492	0.37
	0.4	-	-	-
	0.6	-	-	-
	0.8	-	-	-
T2	0.2	2942	562	0.67
	0.4	2760	613	0.73
	0.6	2431	706	0.84
	0.8	2350	802	0.95
T3	0.2	3464	626	0.97
	0.4	3294	683	1.06
	0.6	3139	730	1.13
	0.8	-	-	-
T4	0.2	4159	707	1.48
	0.4	4062	742	1.56
	0.6	3880	794	1.66
	0.8	3722	844	1.77
T5	0.2	4366	732	1.66
	0.4	4177	786	1.79
	0.6	4097	817	1.86
	0.8	3973	854	1.94
T6	0.2	1853	430	0.24
	0.4	1379	522	0.29
	0.6	1363	845	0.47
	0.8	-	-	-
T7	0.2	2222	470	0.36
	0.4	1895	550	0.42
	0.6	1755	611	0.46
	0.8	1510	726	0.55
T8	0.2	2574	509	0.48
	0.4	2344	577	0.55
	0.6	2128	654	0.62
	0.8	1856	738	0.70
T9	0.2	3639	629	1.02
	0.4	3491	672	1.09
	0.6	3267	768	1.24
	0.8	3045	789	1.28
T10	0.2	3794	646	1.12
	0.4	3620	688	1.19
	0.6	3421	745	1.29
	0.8	3224	800	1.38

10 Ton • 130 MBH Gas Heat Exchanger • Medium Static Direct Drive

Models: DRG1203LL, DRG1204LL, DRG1207LL

Down Flow				
Speed Tap	**ESP**	**CFM**	**RPM**	**BHP**
T1	0.2	2255	553	0.42
	0.4	-	-	-
	0.6	-	-	-
	0.8	-	-	-
	1.0	-	-	-
	1.2	-	-	-
	1.4	-	-	-
T2	0.2	3293	675	1.04
	0.4	3137	725	1.12
	0.6	3010	766	1.19
	0.8	2781	825	1.28
	1.0	2580	876	1.36
	1.2	2426	913	1.41
	1.4	2241	954	1.48
T3	0.2	3293	675	1.04
	0.4	3137	725	1.12
	0.6	3010	766	1.19
	0.8	-	-	-
	1.0	-	-	-
	1.2	-	-	-
	1.4	-	-	-
T4	0.2	4426	847	2.17
	0.4	4311	880	2.25
	0.6	4180	916	2.34
	0.8	4102	944	2.42
	1.0	3957	982	2.51
	1.2	3858	1013	2.59
	1.4	3742	1047	2.68
T5	0.2	4628	878	2.45
	0.4	4516	912	2.54
	0.6	4402	945	2.63
	0.8	4295	978	2.72
	1.0	4186	1011	2.82
	1.2	4076	1042	2.90
	1.4	3969	1073	2.99
T6	0.2	1955	487	0.32
	0.4	1755	557	0.36
	0.6	1567	619	0.41
	0.8	-	-	-
	1.0	-	-	-
	1.2	-	-	-
	1.4	-	-	-
T7	0.2	2628	581	0.62
	0.4	2464	636	0.68
	0.6	2300	691	0.74
	0.8	2136	745	0.80
	1.0	1972	800	0.86
	1.2	1807	855	0.92
	1.4	1643	910	0.97
T8	0.2	2691	588	0.65
	0.4	2523	641	0.71
	0.6	2376	696	0.77
	0.8	2017	782	0.86
	1.0	-	-	-
	1.2	-	-	-
	1.4	-	-	-
T9	0.2	3575	710	1.23
	0.4	3469	749	1.29
	0.6	3293	798	1.38
	0.8	3170	840	1.45
	1.0	3046	880	1.52
	1.2	2786	939	1.62
	1.4	2545	995	1.72
T10	0.2	3848	750	1.46
	0.4	3737	790	1.54
	0.6	3579	833	1.62
	0.8	3471	872	1.70
	1.0	3357	912	1.78
	1.2	3145	958	1.87
	1.4	2952	1009	1.97

Horizontal Flow				
Speed Tap	**ESP**	**CFM**	**RPM**	**BHP**
T1	0.2	2267	492	0.37
	0.4	-	-	-
	0.6	-	-	-
	0.8	-	-	-
	1.0	-	-	-
	1.2	-	-	-
	1.4	-	-	-
T2	0.2	3464	626	0.97
	0.4	3294	683	1.06
	0.6	3139	730	1.13
	0.8	2859	807	1.25
	1.0	2544	884	1.37
	1.2	2387	920	1.42
	1.4	2208	963	1.49
T3	0.2	3464	626	0.97
	0.4	3294	683	1.06
	0.6	3139	730	1.13
	0.8	-	-	-
	1.0	-	-	-
	1.2	-	-	-
	1.4	-	-	-
T4	0.2	4671	773	1.98
	0.4	4596	820	2.10
	0.6	4420	854	2.19
	0.8	4250	894	2.29
	1.0	4119	928	2.38
	1.2	3987	960	2.46
	1.4	3873	1008	2.58
T5	0.2	4896	802	2.23
	0.4	4771	839	2.34
	0.6	4646	878	2.45
	0.8	4510	915	2.55
	1.0	4378	950	2.65
	1.2	4242	992	2.76
	1.4	4093	1035	2.88
T6	0.2	2060	453	0.30
	0.4	1674	537	0.36
	0.6	1582	627	0.42
	0.8	1359	721	0.48
	1.0	-	-	-
	1.2	-	-	-
	1.4	-	-	-
T7	0.2	2741	534	0.57
	0.4	2519	599	0.64
	0.6	2296	665	0.71
	0.8	2074	731	0.78
	1.0	1852	797	0.85
	1.2	1629	863	0.92
	1.4	1407	929	1.00
T8	0.2	2834	538	0.59
	0.4	2651	599	0.66
	0.6	2405	806	0.89
	0.8	2128	748	0.83
	1.0	-	-	-
	1.2	-	-	-
	1.4	-	-	-
T9	0.2	3794	646	1.12
	0.4	3620	688	1.19
	0.6	3421	745	1.29
	0.8	3224	800	1.38
	1.0	3047	854	1.47
	1.2	2743	927	1.60
	1.4	2406	998	1.72
T10	0.2	-	-	-
	0.4	-	-	-
	0.6	3752	817	1.59
	0.8	3588	820	1.60
	1.0	3437	871	1.70
	1.2	3191	941	1.83
	1.4	2911	970	1.89

10 Ton • 130 MBH Gas Heat Exchanger • High Static Direct Drive

Models: DRG1203WL, DRG1204WL, DRG1207WL

Down Flow				
Speed Tap	ESP	CFM	RPM	BHP
T1	0.2	2248	535	0.44
	0.4	-	-	-
	0.6	-	-	-
	0.8	-	-	-
	1.0	-	-	-
	1.2	-	-	-
	1.4	-	-	-
	1.6	-	-	-
	1.8	-	-	-
	2.0	-	-	-
T2	0.2	3814	761	1.35
	0.4	3709	802	1.42
	0.6	3534	839	1.49
	0.8	3399	887	1.57
	1.0	3265	919	1.63
	1.2	3012	967	1.72
	1.4	2779	1027	1.82
	1.6	2643	1042	1.85
	1.8	2509	1060	1.88
	2.0	2383	1120	1.99
T3	0.2	3814	761	1.35
	0.4	3709	802	1.42
	0.6	3534	839	1.49
	0.8	3399	887	1.57
	1.0	3265	919	1.63
	1.2	3012	967	1.72
	1.4	-	-	-
	1.6	-	-	-
	1.8	-	-	-
	2.0	-	-	-
T4	0.2	4790	914	2.55
	0.4	4674	948	2.64
	0.6	4565	982	2.74
	0.8	4440	1013	2.82
	1.0	4321	1046	2.91
	1.2	4211	1076	3.00
	1.4	4094	1104	3.08
	1.6	3988	1135	3.16
	1.8	3884	1163	3.24
	2.0	3770	1192	3.32
T5	0.2	4976	948	2.83
	0.4	4866	979	2.93
	0.6	4763	1010	3.02
	0.8	4634	1040	3.11
	1.0	4520	1071	3.20
	1.2	4408	1099	3.28
	1.4	4288	1128	3.37
	1.6	4187	1157	3.46
	1.8	4078	1182	3.53
	2.0	3976	1214	3.63
T6	0.2	2306	543	0.46
	0.4	2069	595	0.50
	0.6	1774	631	0.53
	0.8	1416	649	0.55
	1.0	-	-	-
	1.2	-	-	-
	1.4	-	-	-
	1.6	-	-	-
	1.8	-	-	-
	2.0	-	-	-

Horizontal Flow				
Speed Tap	ESP	CFM	RPM	BHP
T1	0.2	2312	493	0.40
	0.4	-	-	-
	0.6	-	-	-
	0.8	-	-	-
	1.0	-	-	-
	1.2	-	-	-
	1.4	-	-	-
	1.6	-	-	-
	1.8	-	-	-
	2.0	-	-	-
T2	0.2	3815	680	1.21
	0.4	3705	721	1.28
	0.6	3514	777	1.38
	0.8	3367	823	1.46
	1.0	3222	867	1.54
	1.2	2937	938	1.66
	1.4	2670	1004	1.78
	1.6	2522	1040	1.84
	1.8	2375	1072	1.90
	2.0	2222	1107	1.96
T3	0.2	3815	680	1.21
	0.4	3705	721	1.28
	0.6	3514	777	1.38
	0.8	3367	823	1.46
	1.0	3222	867	1.54
	1.2	-	-	-
	1.4	-	-	-
	1.6	-	-	-
	1.8	-	-	-
	2.0	-	-	-
T4	0.2	4915	830	2.31
	0.4	4789	872	2.43
	0.6	4659	905	2.52
	0.8	4533	959	2.67
	1.0	4420	980	2.73
	1.2	4278	1050	2.93
	1.4	4139	1055	2.94
	1.6	4024	1145	3.19
	1.8	3892	1125	3.13
	2.0	3778	1150	3.20
T5	0.2	-	-	-
	0.4	4972	891	2.66
	0.6	4843	925	2.76
	0.8	4720	964	2.88
	1.0	4607	1002	2.99
	1.2	4471	1036	3.09
	1.4	4338	1070	3.20
	1.6	4223	1105	3.30
	1.8	4095	1140	3.41
	2.0	3983	1170	3.50
T6	0.2	2376	500	0.42
	0.4	2175	571	0.48
	0.6	2024	657	0.56
	0.8	1884	689	0.58
	1.0	-	-	-
	1.2	-	-	-
	1.4	-	-	-
	1.6	-	-	-
	1.8	-	-	-
	2.0	-	-	-

10 Ton • 130 MBH Gas Heat Exchanger • High Static Direct Drive

Models: DRG1203WL, DRG1204WL, DRG1207WL

Down Flow				
Speed Tap	ESP	CFM	RPM	BHP
T7	0.2	-	-	-
	0.4	-	-	-
	0.6	2830	761	1.05
	0.8	2693	809	1.12
	1.0	2457	864	1.19
	1.2	2219	921	1.27
	1.4	1937	970	1.34
	1.6	1778	1006	1.39
	1.8	1574	1055	1.45
	2.0	1365	1149	1.58
T8	0.2	3229	678	0.97
	0.4	3107	723	1.03
	0.6	2907	770	1.10
	0.8	2778	816	1.17
	1.0	2557	869	1.24
	1.2	2308	925	1.32
	1.4	2032	976	1.39
	1.6	-	-	-
	1.8	-	-	-
	2.0	-	-	-
T9	0.2	3706	750	1.34
	0.4	3596	786	1.40
	0.6	3413	835	1.49
	0.8	3273	874	1.56
	1.0	3132	913	1.63
	1.2	2874	973	1.74
	1.4	2641	1027	1.83
	1.6	2501	1063	1.90
	1.8	2366	1097	1.96
	2.0	2226	1129	2.02
T10	0.2	-	-	-
	0.4	3836	832	1.68
	0.6	3714	873	1.77
	0.8	3576	905	1.83
	1.0	3432	948	1.92
	1.2	3323	986	2.00
	1.4	3177	1020	2.06
	1.6	2956	1075	2.18
	1.8	2690	1127	2.28
	2.0	2560	1156	2.34

Horizontal Flow				
Speed Tap	ESP	CFM	RPM	BHP
T7	0.2	-	-	-
	0.4	-	-	-
	0.6	-	-	-
	0.8	2759	766	1.06
	1.0	2540	834	1.15
	1.2	2250	898	1.24
	1.4	1983	958	1.32
	1.6	1840	1013	1.40
	1.8	1627	1073	1.48
	2.0	1413	1132	1.56
T8	0.2	3335	613	0.87
	0.4	3188	668	0.95
	0.6	3021	720	1.03
	0.8	2855	770	1.10
	1.0	2641	836	1.19
	1.2	2345	902	1.29
	1.4	2073	963	1.38
	1.6	-	-	-
	1.8	-	-	-
	2.0	-	-	-
T9	0.2	3819	670	1.20
	0.4	3711	712	1.27
	0.6	3519	770	1.38
	0.8	3377	821	1.47
	1.0	3230	870	1.55
	1.2	2945	944	1.69
	1.4	2687	1015	1.81
	1.6	2525	1055	1.88
	1.8	2361	1089	1.94
	2.0	2232	1128	2.01
T10	0.2	-	-	-
	0.4	-	-	-
	0.6	3841	805	1.63
	0.8	3710	845	1.71
	1.0	3546	895	1.81
	1.2	3410	941	1.91
	1.4	3285	980	1.98
	1.6	3028	1045	2.12
	1.8	2732	1110	2.25
	2.0	2549	1152	2.33

10 Ton • 180 MBH Gas Heat Exchanger • Standard Static Direct Drive

Models: DRG1203DM, DRG1204DM, DRG1207DM

Down Flow				
Speed Tap	ESP	CFM	RPM	BHP
T1	0.2	2184	520	0.43
	0.4	-	-	-
	0.6	-	-	-
	0.8	-	-	-
T2	0.2	2910	654	0.78
	0.4	2702	687	0.82
	0.6	2410	753	0.90
	0.8	2250	792	0.94
T3	0.2	3669	734	1.36
	0.4	3556	775	1.44
	0.6	3428	816	1.52
	0.8	3274	859	1.60
T4	0.2	3940	774	1.62
	0.4	3827	812	1.70
	0.6	3696	850	1.78
	0.8	3571	892	1.87
T5	0.2	4126	802	1.82
	0.4	4022	838	1.91
	0.6	3889	877	1.99
	0.8	3808	908	2.07
T6	0.2	1938	485	0.31
	0.4	-	-	-
	0.6	-	-	-
	0.8	-	-	-
T7	0.2	2621	582	0.62
	0.4	2465	637	0.68
	0.6	2300	690	0.74
	0.8	2136	745	0.80
T8	0.2	2731	593	0.67
	0.4	2564	646	0.73
	0.6	-	-	-
	0.8	-	-	-
T9	0.2	3555	708	1.21
	0.4	3428	749	1.28
	0.6	3275	796	1.36
	0.8	3145	838	1.43
T10	0.2	4200	800	1.82
	0.4	4081	842	1.91
	0.6	3956	882	2.01
	0.8	3855	919	2.09

Horizontal Flow				
Speed Tap	ESP	CFM	RPM	BHP
T1	0.2	2286	486	0.41
	0.4	-	-	-
	0.6	-	-	-
	0.8	-	-	-
T2	0.2	2942	562	0.67
	0.4	2760	613	0.73
	0.6	2431	706	0.84
	0.8	2350	802	0.95
T3	0.2	3874	673	1.25
	0.4	3699	713	1.32
	0.6	3560	769	1.43
	0.8	3438	820	1.52
T4	0.2	4159	707	1.48
	0.4	4062	742	1.56
	0.6	3880	794	1.66
	0.8	3722	844	1.77
T5	0.2	4366	732	1.66
	0.4	4177	786	1.79
	0.6	4097	817	1.86
	0.8	3973	854	1.94
T6	0.2	2042	451	0.30
	0.4	-	-	-
	0.6	-	-	-
	0.8	-	-	-
T7	0.2	2751	534	0.57
	0.4	2525	595	0.64
	0.6	2291	668	0.71
	0.8	2074	731	0.78
T8	0.2	2876	543	0.61
	0.4	2699	602	0.68
	0.6	2450	657	0.74
	0.8	-	-	-
T9	0.2	3765	643	1.10
	0.4	3610	684	1.17
	0.6	3402	681	1.16
	0.8	3195	797	1.36
T10	0.2	4468	726	1.65
	0.4	4258	766	1.74
	0.6	4175	811	1.84
	0.8	4056	851	1.93

10 Ton • 180 MBH Gas Heat Exchanger • Medium Static Direct Drive

Models: DRG1203LM, DRG1204LM, DRG1207LM

Down Flow				
Speed Tap	**ESP**	**CFM**	**RPM**	**BHP**
T1	0.2	2184	520	0.43
	0.4	-	-	-
	0.6	-	-	-
	0.8	-	-	-
	1.0	-	-	-
	1.2	-	-	-
	1.4	-	-	-
T2	0.2	3293	675	1.04
	0.4	3137	725	1.12
	0.6	3010	766	1.19
	0.8	2781	825	1.28
	1.0	2580	876	1.36
	1.2	2426	913	1.41
	1.4	2241	954	1.48
T3	0.2	3669	734	1.36
	0.4	3556	775	1.44
	0.6	3428	816	1.52
	0.8	3274	859	1.60
	1.0	3171	892	1.66
	1.2	-	-	-
	1.4	-	-	-
T4	0.2	4426	847	2.17
	0.4	4311	880	2.25
	0.6	4180	916	2.34
	0.8	4102	944	2.42
	1.0	3957	982	2.51
	1.2	3858	1013	2.59
	1.4	3742	1047	2.68
T5	0.2	4628	878	2.45
	0.4	4516	912	2.54
	0.6	4402	945	2.63
	0.8	4295	978	2.72
	1.0	4186	1011	2.82
	1.2	4076	1042	2.90
	1.4	3969	1073	2.99
T6	0.2	2516	564	0.56
	0.4	2340	621	0.62
	0.6	2188	677	0.67
	0.8	-	-	-
	1.0	-	-	-
	1.2	-	-	-
	1.4	-	-	-
T7	0.2	3329	682	1.08
	0.4	3186	728	1.15
	0.6	3056	770	1.22
	0.8	2852	823	1.30
	1.0	2679	876	1.38
	1.2	2500	911	1.44
	1.4	2290	959	1.51
T8	0.2	4018	786	1.70
	0.4	3911	823	1.78
	0.6	3776	862	1.87
	0.8	3674	899	1.95
	1.0	3529	973	2.1
	1.2	3391	975	2.11
	1.4	3222	1014	2.20
T9	0.2	4343	835	2.07
	0.4	4237	869	2.16
	0.6	4109	905	2.25
	0.8	4022	938	2.33
	1.0	3530	973	2.41
	1.2	3771	1008	2.50
	1.4	3639	1038	2.57
T10	0.2	4628	878	2.45
	0.4	4516	912	2.54
	0.6	4402	945	2.63
	0.8	4295	978	2.72
	1.0	4186	1011	2.82
	1.2	4076	1042	2.90
	1.4	3969	1073	2.99

Horizontal Flow				
Speed Tap	**ESP**	**CFM**	**RPM**	**BHP**
T1	0.2	2286	486	0.41
	0.4	-	-	-
	0.6	-	-	-
	0.8	-	-	-
	1.0	-	-	-
	1.2	-	-	-
	1.4	-	-	-
T2	0.2	3464	626	0.97
	0.4	3294	683	1.06
	0.6	3139	730	1.13
	0.8	2859	807	1.25
	1.0	2544	884	1.37
	1.2	2387	920	1.42
	1.4	2208	963	1.49
T3	0.2	3874	673	1.25
	0.4	3699	713	1.32
	0.6	3560	769	1.43
	0.8	3438	820	1.52
	1.0	3243	870	1.62
	1.2	-	-	-
	1.4	-	-	-
T4	0.2	4671	773	1.98
	0.4	4596	820	2.10
	0.6	4420	854	2.19
	0.8	4250	894	2.29
	1.0	4119	928	2.38
	1.2	3987	960	2.46
	1.4	3873	1008	2.58
T5	0.2	4896	802	2.23
	0.4	4771	839	2.34
	0.6	4646	878	2.45
	0.8	4510	915	2.55
	1.0	4378	950	2.65
	1.2	4242	992	2.76
	1.4	4093	1035	2.88
T6	0.2	2648	517	0.51
	0.4	2434	583	0.58
	0.6	2208	647	0.64
	0.8	1933	741	0.74
	1.0	-	-	-
	1.2	-	-	-
	1.4	-	-	-
T7	0.2	3582	622	0.98
	0.4	3436	666	1.05
	0.6	3206	812	1.28
	0.8	2978	785	1.24
	1.0	2769	842	1.33
	1.2	2454	913	1.44
	1.4	2144	957	1.51
T8	0.2	4359	712	1.54
	0.4	4170	749	1.62
	0.6	4044	821	1.78
	0.8	3910	842	1.82
	1.0	3732	890	1.93
	1.2	3574	945	2.0
	1.4	3379	977	2.1
T9	0.2	4707	754	1.87
	0.4	4534	792	1.97
	0.6	4425	828	2.05
	0.8	4306	877	2.18
	1.0	4102	919	2.28
	1.2	4026	954	2.37
	1.4	3925	995	2.47
T10	0.2	5018	794	2.21
	0.4	4884	834	2.32
	0.6	4750	875	2.44
	0.8	4613	912	2.54
	1.0	4481	950	2.65
	1.2	4339	990	2.76
	1.4	4187	1030	2.87

10 Ton • 180 MBH Gas Heat Exchanger • High Static Direct Drive

Models: DRG1203WM, DRG1204WM, DRG1207WM

Down Flow				
Speed Tap	ESP	CFM	RPM	BHP
T1	0.2	2248	535	0.44
	0.4	-	-	-
	0.6	-	-	-
	0.8	-	-	-
	1.0	-	-	-
	1.2	-	-	-
	1.4	-	-	-
	1.6	-	-	-
	1.8	-	-	-
	2.0	-	-	-
T2	0.2	3814	761	1.35
	0.4	3709	802	1.42
	0.6	3534	839	1.49
	0.8	3399	887	1.57
	1.0	3265	919	1.63
	1.2	3012	967	1.72
	1.4	2779	1027	1.82
	1.6	2643	1042	1.85
	1.8	2509	1060	1.88
	2.0	2383	1120	1.99
T3	0.2	3814	761	1.35
	0.4	3709	802	1.42
	0.6	3534	839	1.49
	0.8	3399	887	1.57
	1.0	3265	919	1.63
	1.2	3012	967	1.72
	1.4	-	-	-
	1.6	-	-	-
	1.8	-	-	-
	2.0	-	-	-
T4	0.2	4790	914	2.55
	0.4	4674	948	2.64
	0.6	4565	982	2.74
	0.8	4440	1013	2.82
	1.0	4321	1046	2.91
	1.2	4211	1076	3.00
	1.4	4094	1104	3.08
	1.6	3988	1135	3.16
	1.8	3884	1163	3.24
	2.0	3770	1192	3.32
T5	0.2	4976	948	2.83
	0.4	4866	979	2.93
	0.6	4763	1010	3.02
	0.8	4634	1040	3.11
	1.0	4520	1071	3.20
	1.2	4408	1099	3.28
	1.4	4288	1128	3.37
	1.6	4187	1157	3.46
	1.8	4078	1182	3.53
	2.0	3976	1214	3.63
T6	0.2	3493	718	1.16
	0.4	3374	758	1.23
	0.6	3189	805	1.30
	0.8	3053	847	1.37
	1.0	2899	890	1.44
	1.2	2628	949	1.54
	1.4	2393	1001	1.62
	1.6	2242	1050	1.70
	1.8	2059	1094	1.77
	2.0	1897	1131	1.83

Horizontal Flow				
Speed Tap	ESP	CFM	RPM	BHP
T1	0.2	2312	493	0.40
	0.4	-	-	-
	0.6	-	-	-
	0.8	-	-	-
	1.0	-	-	-
	1.2	-	-	-
	1.4	-	-	-
	1.6	-	-	-
	1.8	-	-	-
	2.0	-	-	-
T2	0.2	3815	680	1.21
	0.4	3705	721	1.28
	0.6	3514	777	1.38
	0.8	3367	823	1.46
	1.0	3222	867	1.54
	1.2	2937	938	1.66
	1.4	2670	1004	1.78
	1.6	2522	1040	1.84
	1.8	2375	1072	1.90
	2.0	2222	1107	1.96
T3	0.2	3815	680	1.21
	0.4	3705	721	1.28
	0.6	3514	777	1.38
	0.8	3367	823	1.46
	1.0	3222	867	1.54
	1.2	-	-	-
	1.4	-	-	-
	1.6	-	-	-
	1.8	-	-	-
	2.0	-	-	-
T4	0.2	4915	830	2.31
	0.4	4789	872	2.43
	0.6	4659	905	2.52
	0.8	4533	959	2.67
	1.0	4420	980	2.73
	1.2	4278	1050	2.93
	1.4	4139	1055	2.94
	1.6	4024	1145	3.19
	1.8	3892	1125	3.13
	2.0	3778	1150	3.20
T5	0.2	-	-	-
	0.4	4972	891	2.66
	0.6	4843	925	2.76
	0.8	4720	964	2.88
	1.0	4607	1002	2.99
	1.2	4471	1036	3.09
	1.4	4338	1070	3.20
	1.6	4223	1105	3.30
	1.8	4095	1140	3.41
	2.0	3983	1170	3.50
T6	0.2	3603	644	1.04
	0.4	3478	693	1.12
	0.6	3301	750	1.21
	0.8	3171	791	1.28
	1.0	2993	853	1.38
	1.2	2691	919	1.49
	1.4	2418	988	1.60
	1.6	2278	1035	1.68
	1.8	2123	1070	1.73
	2.0	1933	1128	1.83

10 Ton • 180 MBH Gas Heat Exchanger • High Static Direct Drive

Models: DRG1203WM, DRG1204WM, DRG1207WM

Down Flow				
Speed Tap	ESP	CFM	RPM	BHP
T7	0.2	-	-	-
	0.4	-	-	-
	0.6	2830	761	1.05
	0.8	2693	809	1.12
	1.0	2457	864	1.19
	1.2	2219	921	1.27
	1.4	1937	970	1.34
	1.6	1778	1006	1.39
	1.8	1574	1055	1.45
	2.0	1365	1149	1.58
T8	0.2	3229	678	0.97
	0.4	3107	723	1.03
	0.6	2907	770	1.10
	0.8	2778	816	1.17
	1.0	2557	869	1.24
	1.2	2308	925	1.32
	1.4	2032	976	1.39
	1.6	-	-	-
	1.8	-	-	-
	2.0	-	-	-
T9	0.2	3706	750	1.34
	0.4	3596	786	1.40
	0.6	3413	835	1.49
	0.8	3273	874	1.56
	1.0	3132	913	1.63
	1.2	2874	973	1.74
	1.4	2641	1027	1.83
	1.6	2501	1063	1.90
	1.8	2366	1097	1.96
	2.0	2226	1129	2.02
T10	0.2	-	-	-
	0.4	3836	832	1.68
	0.6	3714	873	1.77
	0.8	3576	905	1.83
	1.0	3432	948	1.92
	1.2	3323	986	2.00
	1.4	3177	1020	2.06
	1.6	2956	1075	2.18
	1.8	2690	1127	2.28
	2.0	2560	1156	2.34

Horizontal Flow				
Speed Tap	ESP	CFM	RPM	BHP
T7	0.2	-	-	-
	0.4	-	-	-
	0.6	-	-	-
	0.8	2759	766	1.06
	1.0	2540	834	1.15
	1.2	2250	898	1.24
	1.4	1983	958	1.32
	1.6	1840	1013	1.40
	1.8	1627	1073	1.48
	2.0	1413	1132	1.56
T8	0.2	3335	613	0.87
	0.4	3188	668	0.95
	0.6	3021	720	1.03
	0.8	2855	770	1.10
	1.0	2641	836	1.19
	1.2	2345	902	1.29
	1.4	2073	963	1.38
	1.6	-	-	-
	1.8	-	-	-
	2.0	-	-	-
T9	0.2	3819	670	1.20
	0.4	3711	712	1.27
	0.6	3519	770	1.38
	0.8	3377	821	1.47
	1.0	3230	870	1.55
	1.2	2945	944	1.69
	1.4	2687	1015	1.81
	1.6	2525	1055	1.88
	1.8	2361	1089	1.94
	2.0	2232	1128	2.01
T10	0.2	-	-	-
	0.4	-	-	-
	0.6	3841	805	1.63
	0.8	3710	845	1.71
	1.0	3546	895	1.81
	1.2	3410	941	1.91
	1.4	3285	980	1.98
	1.6	3028	1045	2.12
	1.8	2732	1110	2.25
	2.0	2549	1152	2.33

10 Ton • 240 MBH Gas Heat Exchanger • Standard Static Direct Drive

Models: DRG1203DH, DRG1204DH, DRG1207DH

Down Flow				
Speed Tap	**ESP**	**CFM**	**RPM**	**BHP**
T1	0.2	2184	520	0.43
	0.4	-	-	-
	0.6	-	-	-
	0.8	-	-	-
T2	0.2	2910	654	0.78
	0.4	2702	687	0.82
	0.6	2410	753	0.90
	0.8	2250	792	0.94
T3	0.2	3669	734	1.36
	0.4	3556	775	1.44
	0.6	3428	816	1.52
	0.8	3274	859	1.60
T4	0.2	3940	774	1.62
	0.4	3827	812	1.70
	0.6	3696	850	1.78
	0.8	3571	892	1.87
T5	0.2	4126	802	1.82
	0.4	4022	838	1.91
	0.6	3889	877	1.99
	0.8	3808	908	2.07
T6	0.2	2223	524	0.43
	0.4	-	-	-
	0.6	-	-	-
	0.8	-	-	-
T7	0.2	3023	634	0.84
	0.4	2870	681	0.90
	0.6	2725	733	0.97
	0.8	2486	795	1.05
T8	0.2	3720	732	1.35
	0.4	3602	772	1.42
	0.6	3446	817	1.50
	0.8	3331	857	1.58
T9	0.2	3979	769	1.59
	0.4	3875	809	1.67
	0.6	3717	850	1.76
	0.8	3611	890	1.84
T10	0.2	4200	800	1.82
	0.4	4081	842	1.91
	0.6	3956	882	2.01
	0.8	3855	919	2.09

Horizontal Flow				
Speed Tap	**ESP**	**CFM**	**RPM**	**BHP**
T1	0.2	2286	486	0.41
	0.4	-	-	-
	0.6	-	-	-
	0.8	-	-	-
T2	0.2	2942	562	0.67
	0.4	2760	613	0.73
	0.6	2431	706	0.84
	0.8	2317	733	0.87
T3	0.2	3874	673	1.25
	0.4	3699	713	1.32
	0.6	3560	769	1.43
	0.8	3438	820	1.52
T4	0.2	4159	707	1.48
	0.4	4062	742	1.56
	0.6	3880	794	1.66
	0.8	3722	844	1.77
T5	0.2	4366	732	1.66
	0.4	4177	786	1.79
	0.6	4097	817	1.86
	0.8	3973	854	1.94
T6	0.2	2340	483	0.40
	0.4	-	-	-
	0.6	-	-	-
	0.8	-	-	-
T7	0.2	3187	577	0.76
	0.4	3038	629	0.83
	0.6	2783	664	0.88
	0.8	2519	764	1.01
T8	0.2	3947	664	1.22
	0.4	3781	703	1.29
	0.6	3599	816	1.50
	0.8	3416	1002	1.84
T9	0.2	4237	698	1.44
	0.4	4053	734	1.52
	0.6	3912	819	1.69
	0.8	3765	831	1.72
T10	0.2	4468	726	1.65
	0.4	4258	766	1.74
	0.6	4175	811	1.84
	0.8	4056	851	1.93

10 Ton • 240 MBH Gas Heat Exchanger • Medium Static Direct Drive

Models: DRG1203LH, DRG1204LH, DRG1207LH

Down Flow				
Speed Tap	**ESP**	**CFM**	**RPM**	**BHP**
T1	0.2	2184	520	0.43
	0.4	-	-	-
	0.6	-	-	-
	0.8	-	-	-
	1.0	-	-	-
	1.2	-	-	-
	1.4	-	-	-
T2	0.2	3293	675	1.04
	0.4	3137	725	1.12
	0.6	3010	766	1.19
	0.8	2781	825	1.28
	1.0	2580	876	1.36
	1.2	2426	913	1.41
	1.4	2241	954	1.48
T3	0.2	3669	734	1.36
	0.4	3556	775	1.44
	0.6	3428	816	1.52
	0.8	3274	859	1.60
	1.0	3171	892	1.66
	1.2	-	-	-
	1.4	-	-	-
T4	0.2	4426	847	2.17
	0.4	4311	880	2.25
	0.6	4180	916	2.34
	0.8	4102	944	2.42
	1.0	3957	982	2.51
	1.2	3858	1013	2.59
	1.4	3742	1047	2.68
T5	0.2	4628	878	2.45
	0.4	4516	912	2.54
	0.6	4402	945	2.63
	0.8	4295	978	2.72
	1.0	4186	1011	2.82
	1.2	4076	1042	2.90
	1.4	3969	1073	2.99
T6	0.2	2516	564	0.56
	0.4	2340	621	0.62
	0.6	2188	677	0.67
	0.8	-	-	-
	1.0	-	-	-
	1.2	-	-	-
	1.4	-	-	-
T7	0.2	3329	682	1.08
	0.4	3186	728	1.15
	0.6	3056	770	1.22
	0.8	2852	823	1.30
	1.0	2679	876	1.38
	1.2	2500	911	1.44
	1.4	2290	959	1.51
T8	0.2	4018	786	1.70
	0.4	3911	823	1.78
	0.6	3776	862	1.87
	0.8	3674	899	1.95
	1.0	3529	973	2.1
	1.2	3391	975	2.11
	1.4	3222	1014	2.20
T9	0.2	4343	835	2.07
	0.4	4237	869	2.16
	0.6	4109	905	2.25
	0.8	4022	938	2.33
	1.0	3530	973	2.41
	1.2	3771	1008	2.50
	1.4	3639	1038	2.57
T10	0.2	4628	878	2.45
	0.4	4516	912	2.54
	0.6	4402	945	2.63
	0.8	4295	978	2.72
	1.0	4186	1011	2.82
	1.2	4076	1042	2.90
	1.4	3969	1073	2.99

Horizontal Flow				
Speed Tap	**ESP**	**CFM**	**RPM**	**BHP**
T1	0.2	2286	486	0.41
	0.4	-	-	-
	0.6	-	-	-
	0.8	-	-	-
	1.0	-	-	-
	1.2	-	-	-
	1.4	-	-	-
T2	0.2	3464	626	0.97
	0.4	3294	683	1.06
	0.6	3139	730	1.13
	0.8	2859	807	1.25
	1.0	2544	884	1.37
	1.2	2387	920	1.42
	1.4	2208	963	1.49
T3	0.2	3874	673	1.25
	0.4	3699	713	1.32
	0.6	3560	769	1.43
	0.8	3438	820	1.52
	1.0	3243	870	1.62
	1.2	-	-	-
	1.4	-	-	-
T4	0.2	4671	773	1.98
	0.4	4596	820	2.10
	0.6	4420	854	2.19
	0.8	4250	894	2.29
	1.0	4119	928	2.38
	1.2	3987	960	2.46
	1.4	3873	1008	2.58
T5	0.2	4896	802	2.23
	0.4	4771	839	2.34
	0.6	4646	878	2.45
	0.8	4510	915	2.55
	1.0	4378	950	2.65
	1.2	4242	992	2.76
	1.4	4093	1035	2.88
T6	0.2	2648	517	0.51
	0.4	2434	583	0.58
	0.6	2208	647	0.64
	0.8	1933	741	0.74
	1.0	-	-	-
	1.2	-	-	-
	1.4	-	-	-
T7	0.2	3582	622	0.98
	0.4	3436	666	1.05
	0.6	3206	812	1.28
	0.8	2978	785	1.24
	1.0	2769	842	1.33
	1.2	2454	913	1.44
	1.4	2144	957	1.51
T8	0.2	4359	712	1.54
	0.4	4170	749	1.62
	0.6	4044	821	1.78
	0.8	3910	842	1.82
	1.0	3732	890	1.93
	1.2	3574	945	2.0
	1.4	3379	977	2.1
T9	0.2	4707	754	1.87
	0.4	4534	792	1.97
	0.6	4425	828	2.05
	0.8	4306	877	2.18
	1.0	4102	919	2.28
	1.2	4026	954	2.37
	1.4	3925	995	2.47
T10	0.2	5018	794	2.21
	0.4	4884	834	2.32
	0.6	4750	875	2.44
	0.8	4613	912	2.54
	1.0	4481	950	2.65
	1.2	4339	990	2.76
	1.4	4187	1030	2.87

10 Ton • 240 MBH Gas Heat Exchanger • High Static Direct Drive

Models: DRG1203WH, DRG1204WH, DRG1207WH

Down Flow				
Speed Tap	ESP	CFM	RPM	BHP
T1	0.2	2248	535	0.44
	0.4	-	-	-
	0.6	-	-	-
	0.8	-	-	-
	1.0	-	-	-
	1.2	-	-	-
	1.4	-	-	-
	1.6	-	-	-
	1.8	-	-	-
	2.0	-	-	-
T2	0.2	3814	761	1.35
	0.4	3709	802	1.42
	0.6	3534	839	1.49
	0.8	3399	887	1.57
	1.0	3265	919	1.63
	1.2	3012	967	1.72
	1.4	2779	1027	1.82
	1.6	2643	1042	1.85
	1.8	2509	1060	1.88
	2.0	2383	1120	1.99
T3	0.2	3814	761	1.35
	0.4	3709	802	1.42
	0.6	3534	839	1.49
	0.8	3399	887	1.57
	1.0	3265	919	1.63
	1.2	3012	967	1.72
	1.4	-	-	-
	1.6	-	-	-
	1.8	-	-	-
	2.0	-	-	-
T4	0.2	4790	914	2.55
	0.4	4674	948	2.64
	0.6	4565	982	2.74
	0.8	4440	1013	2.82
	1.0	4321	1046	2.91
	1.2	4211	1076	3.00
	1.4	4094	1104	3.08
	1.6	3988	1135	3.16
	1.8	3884	1163	3.24
	2.0	3770	1192	3.32
T5	0.2	4976	948	2.83
	0.4	4866	979	2.93
	0.6	4763	1010	3.02
	0.8	4634	1040	3.11
	1.0	4520	1071	3.20
	1.2	4408	1099	3.28
	1.4	4288	1128	3.37
	1.6	4187	1157	3.46
	1.8	4078	1182	3.53
	2.0	3976	1214	3.63
T6	0.2	3158	668	0.92
	0.4	3033	713	0.98
	0.6	2830	761	1.05
	0.8	2693	809	1.12
	1.0	2457	864	1.19
	1.2	-	-	-
	1.4	-	-	-
	1.6	-	-	-
	1.8	-	-	-
	2.0	-	-	-

Horizontal Flow				
Speed Tap	ESP	CFM	RPM	BHP
T1	0.2	2312	493	0.40
	0.4	-	-	-
	0.6	-	-	-
	0.8	-	-	-
	1.0	-	-	-
	1.2	-	-	-
	1.4	-	-	-
	1.6	-	-	-
	1.8	-	-	-
	2.0	-	-	-
T2	0.2	3815	680	1.21
	0.4	3705	721	1.28
	0.6	3514	777	1.38
	0.8	3367	823	1.46
	1.0	3222	867	1.54
	1.2	2937	938	1.66
	1.4	2670	1004	1.78
	1.6	2522	1040	1.84
	1.8	2375	1072	1.90
	2.0	2222	1107	1.96
T3	0.2	3815	680	1.21
	0.4	3705	721	1.28
	0.6	3514	777	1.38
	0.8	3367	823	1.46
	1.0	3222	867	1.54
	1.2	-	-	-
	1.4	-	-	-
	1.6	-	-	-
	1.8	-	-	-
	2.0	-	-	-
T4	0.2	4915	830	2.31
	0.4	4789	872	2.43
	0.6	4659	905	2.52
	0.8	4533	959	2.67
	1.0	4420	980	2.73
	1.2	4278	1050	2.93
	1.4	4139	1055	2.94
	1.6	4024	1145	3.19
	1.8	3892	1125	3.13
	2.0	3778	1150	3.20
T5	0.2	-	-	-
	0.4	4972	891	2.66
	0.6	4843	925	2.76
	0.8	4720	964	2.88
	1.0	4607	1002	2.99
	1.2	4471	1036	3.09
	1.4	4338	1070	3.20
	1.6	4223	1105	3.30
	1.8	4095	1140	3.41
	2.0	3983	1170	3.50
T6	0.2	3265	605	0.83
	0.4	3112	661	0.91
	0.6	2944	713	0.98
	0.8	2759	766	1.06
	1.0	2540	834	1.15
	1.2	2250	898	1.24
	1.4	-	-	-
	1.6	-	-	-
	1.8	-	-	-
	2.0	-	-	-

10 Ton • 240 MBH Gas Heat Exchanger • High Static Direct Drive

Models: DRG1203WH, DRG1204WH, DRG1207WH

Down Flow				
Speed Tap	ESP	CFM	RPM	BHP
T7	0.2	3926	777	1.46
	0.4	3816	817	1.54
	0.6	3651	855	1.61
	0.8	3520	900	1.70
	1.0	3387	933	1.76
	1.2	3162	978	1.84
	1.4	2953	1032	1.95
	1.6	2820	1051	1.98
	1.8	2694	1072	2.02
	2.0	2566	1125	2.12
T8	0.2	4420	851	2.04
	0.4	4301	890	2.13
	0.6	4173	927	2.22
	0.8	4049	963	2.30
	1.0	3923	997	2.39
	1.2	3788	1032	2.47
	1.4	3652	1066	2.55
	1.6	3535	1096	2.62
	1.8	3430	1125	2.69
	2.0	3302	1157	2.77
T9	0.2	4973	947	3.02
	0.4	4862	978	3.12
	0.6	4760	1010	3.22
	0.8	4629	1039	3.31
	1.0	4509	1067	3.40
	1.2	4402	1098	3.50
	1.4	4287	1128	3.60
	1.6	4181	1156	3.69
	1.8	4069	1184	3.78
	2.0	3972	1214	3.87
T10	0.2	5486	1024	3.94
	0.4	5379	1069	4.11
	0.6	5276	1093	4.20
	0.8	5157	1107	4.26
	1.0	5049	1140	4.38
	1.2	4938	1164	4.47
	1.4	4824	1190	4.57
	1.6	4720	1219	4.68
	1.8	4609	1246	4.79
	2.0	4509	1273	4.89

Horizontal Flow				
Speed Tap	ESP	CFM	RPM	BHP
T7	0.2	3932	685	1.29
	0.4	3813	730	1.38
	0.6	3645	782	1.47
	0.8	3511	829	1.56
	1.0	3357	879	1.66
	1.2	3137	941	1.77
	1.4	2982	998	1.88
	1.6	2729	1048	1.98
	1.8	2521	1095	2.07
	2.0	2372	1127	2.13
T8	0.2	4542	765	1.83
	0.4	4402	809	1.94
	0.6	4283	851	2.04
	0.8	4162	893	2.14
	1.0	4027	934	2.24
	1.2	3927	977	2.34
	1.4	3761	1017	2.43
	1.6	3596	1073	2.57
	1.8	3376	1110	2.66
	2.0	3089	1165	2.79
T9	0.2	5135	840	2.62
	0.4	5018	884	2.76
	0.6	4882	916	2.86
	0.8	4780	957	2.99
	1.0	4670	992	3.09
	1.2	4535	1031	3.22
	1.4	4464	1075	3.35
	1.6	4305	1109	3.46
	1.8	4188	1154	3.60
	2.0	4102	1128	3.52
T10	0.2	5656	926	3.56
	0.4	5524	956	3.67
	0.6	5386	985	3.78
	0.8	5281	1019	3.92
	1.0	5155	1049	4.03
	1.2	5040	1083	4.16
	1.4	4940	1117	4.29
	1.6	4800	1148	4.41
	1.8	4678	1188	4.57
	2.0	4557	1209	4.65

12.5 Ton • 130 MBH Gas Heat Exchanger • Standard Static Direct Drive

Models: DRG1503DL, DRG1504DL, DRG1507DL

Down Flow				
Speed Tap	**ESP**	**CFM**	**RPM**	**BHP**
T1	0.2	2377	559	0.52
	0.4	-	-	-
	0.6	-	-	-
	0.8	-	-	-
T2	0.2	3178	662	0.93
	0.4	3007	705	0.99
	0.6	2856	751	1.05
	0.8	2533	822	1.16
T3	0.2	3944	784	1.59
	0.4	3783	823	1.67
	0.6	-	-	-
	0.8	-	-	-
T4	0.2	4435	842	2.08
	0.4	4287	886	2.19
	0.6	4153	922	2.28
	0.8	4025	952	2.36
T5	0.2	4719	897	2.50
	0.4	4587	929	2.59
	0.6	4458	962	2.68
	0.8	4329	993	2.77
T6	0.2	1828	480	0.30
	0.4	1418	565	0.35
	0.6	-	-	-
	0.8	-	-	-
T7	0.2	2150	527	0.42
	0.4	1867	601	0.48
	0.6	1628	666	0.53
	0.8	1400	724	0.58
T8	0.2	2454	570	0.56
	0.4	2253	635	0.62
	0.6	2022	698	0.68
	0.8	-	-	-
T9	0.2	2634	596	0.64
	0.4	2464	655	0.71
	0.6	2245	716	0.77
	0.8	1963	785	0.85
T10	0.2	2801	625	0.74
	0.4	2646	676	0.81
	0.6	2488	730	0.87
	0.8	2145	805	0.96

Horizontal Flow				
Speed Tap	**ESP**	**CFM**	**RPM**	**BHP**
T1	0.2	2478	525	0.49
	0.4	-	-	-
	0.6	-	-	-
	0.8	-	-	-
T2	0.2	3261	616	0.87
	0.4	3134	667	0.94
	0.6	3011	717	1.01
	0.8	2786	779	1.09
T3	0.2	4019	720	1.46
	0.4	3926	756	1.53
	0.6	3807	805	1.63
	0.8	-	-	-
T4	0.2	4484	786	1.95
	0.4	4364	830	2.05
	0.6	4287	863	2.14
	0.8	4194	899	2.23
T5	0.2	4777	830	2.31
	0.4	4680	865	2.41
	0.6	4581	901	2.51
	0.8	4485	934	2.60
T6	0.2	1946	462	0.29
	0.4	1869	607	0.38
	0.6	-	-	-
	0.8	-	-	-
T7	0.2	2256	499	0.40
	0.4	1980	532	0.43
	0.6	1756	654	0.52
	0.8	1432	725	0.58
T8	0.2	2552	534	0.52
	0.4	2287	549	0.54
	0.6	2199	672	0.65
	0.8	1853	746	0.73
T9	0.2	2728	556	0.60
	0.4	2519	587	0.63
	0.6	2428	683	0.74
	0.8	2154	755	0.82
T10	0.2	2900	577	0.69
	0.4	2744	638	0.76
	0.6	2586	702	0.84
	0.8	2435	756	0.90

12.5 Ton • 130 MBH Gas Heat Exchanger • Medium Static Direct Drive

Models: DRG1503LL, DRG1504LL, DRG1507LL

Down Flow				
Speed Tap	**ESP**	**CFM**	**RPM**	**BHP**
T1	0.2	2377	559	0.52
	0.4	-	-	-
	0.6	-	-	-
	0.8	-	-	-
	1.0	-	-	-
	1.2	-	-	-
	1.4	-	-	-
T2	0.2	3655	740	1.32
	0.4	3495	782	1.40
	0.6	3361	820	1.46
	0.8	3231	857	1.53
	1.0	2967	915	1.63
	1.2	2685	969	1.73
	1.4	2550	1001	1.79
T3	0.2	3944	784	1.59
	0.4	3783	823	1.67
	0.6	-	-	-
	0.8	-	-	-
	1.0	-	-	-
	1.2	-	-	-
	1.4	-	-	-
T4	0.2	4536	878	2.30
	0.4	4407	910	2.38
	0.6	4304	939	2.46
	0.8	4176	974	2.55
	1.0	4066	1004	2.63
	1.2	3946	1036	2.71
	1.4	3826	1067	2.79
T5	0.2	4719	897	2.50
	0.4	4587	929	2.59
	0.6	4458	962	2.68
	0.8	4329	993	2.77
	1.0	4211	1025	2.86
	1.2	4087	1057	2.94
	1.4	3975	1087	3.03
T6	0.2	2072	515	0.39
	0.4	1763	592	0.45
	0.6	1524	658	0.50
	0.8	-	-	-
	1.0	-	-	-
	1.2	-	-	-
	1.4	-	-	-
T7	0.2	2712	607	0.69
	0.4	2553	665	0.75
	0.6	2339	724	0.82
	0.8	2056	793	0.90
	1.0	1860	839	0.95
	1.2	1712	895	1.01
	1.4	1479	904	1.02
T8	0.2	2940	640	0.82
	0.4	2797	691	0.88
	0.6	2603	746	0.95
	0.8	2325	813	1.04
	1.0	2109	864	1.1
	1.2	1975	914	1.17
	1.4	1797	944	1.21
T9	0.2	3281	688	1.04
	0.4	3136	733	1.11
	0.6	2976	779	1.18
	0.8	2731	838	1.27
	1.0	2505	892	1.35
	1.2	2356	933	1.41
	1.4	2107	944	1.43
T10	0.2	3586	732	1.28
	0.4	3419	772	1.35
	0.6	3288	811	1.42
	0.8	3089	858	1.50
	1.0	2878	909	1.59
	1.2	2754	948	1.66
	1.4	2404	1009	1.77

Horizontal Flow				
Speed Tap	**ESP**	**CFM**	**RPM**	**BHP**
T1	0.2	2478	525	0.49
	0.4	-	-	-
	0.6	-	-	-
	0.8	-	-	-
	1.0	-	-	-
	1.2	-	-	-
	1.4	-	-	-
T2	0.2	3743	682	1.22
	0.4	3661	715	1.28
	0.6	3519	772	1.38
	0.8	3457	814	1.45
	1.0	3294	858	1.53
	1.2	3051	924	1.65
	1.4	2667	995	1.78
T3	0.2	4019	720	1.46
	0.4	3926	756	1.53
	0.6	3807	805	1.63
	0.8	-	-	-
	1.0	-	-	-
	1.2	-	-	-
	1.4	-	-	-
T4	0.2	4609	807	2.11
	0.4	4517	843	2.21
	0.6	4424	882	2.31
	0.8	4323	915	2.40
	1.0	4216	951	2.49
	1.2	4115	989	2.59
	1.4	4010	1025	2.68
T5	0.2	4777	830	2.31
	0.4	4680	865	2.41
	0.6	4581	901	2.51
	0.8	4485	934	2.60
	1.0	4387	970	2.70
	1.2	4285	1005	2.80
	1.4	4184	1039	2.89
T6	0.2	2181	490	0.37
	0.4	1930	540	0.41
	0.6	1632	649	0.49
	0.8	1355	719	0.54
	1.0	-	-	-
	1.2	-	-	-
	1.4	-	-	-
T7	0.2	2806	565	0.64
	0.4	2623	608	0.69
	0.6	2520	688	0.78
	0.8	2285	758	0.86
	1.0	2051	818	0.93
	1.2	1803	886	1.00
	1.4	1651	957	1.08
T8	0.2	3033	593	0.76
	0.4	2898	651	0.83
	0.6	2749	702	0.90
	0.8	2619	766	0.98
	1.0	2313	815	1.04
	1.2	2042	873	1.1
	1.4	1798	909	1.2
T9	0.2	3379	636	0.96
	0.4	3177	687	1.04
	0.6	3045	725	1.10
	0.8	2914	782	1.19
	1.0	2687	819	1.24
	1.2	2461	867	1.31
	1.4	2235	933	1.41
T10	0.2	3697	677	1.19
	0.4	3487	722	1.27
	0.6	3346	758	1.33
	0.8	3228	812	1.42
	1.0	3136	862	1.51
	1.2	2969	911	1.60
	1.4	2739	979	1.72

12.5 Ton • 130 MBH Gas Heat Exchanger • High Static Direct Drive

Models: DRG1503WL, DRG1504WL, DRG1507WL

Down Flow				
Speed Tap	ESP	CFM	RPM	BHP
T1	0.2	2511	639	0.63
	0.4	-	-	-
	0.6	-	-	-
	0.8	-	-	-
	1.0	-	-	-
	1.2	-	-	-
	1.4	-	-	-
	1.6	-	-	-
	1.8	-	-	-
	2.0	-	-	-
T2	0.2	3737	894	1.97
	0.4	3699	919	2.03
	0.6	3604	952	2.10
	0.8	3476	990	2.18
	1.0	3276	1035	2.28
	1.2	3052	1082	2.38
	1.4	2890	1120	2.47
	1.6	2738	1154	2.54
	1.8	2584	1186	2.61
	2.0	2499	1207	2.66
T3	0.2	3953	863	1.80
	0.4	3837	903	1.88
	0.6	-	-	-
	0.8	-	-	-
	1.0	-	-	-
	1.2	-	-	-
	1.4	-	-	-
	1.6	-	-	-
	1.8	-	-	-
	2.0	-	-	-
T4	0.2	4964	1024	3.47
	0.4	4909	1046	3.55
	0.6	4808	1079	3.66
	0.8	4764	1096	3.72
	1.0	4626	1123	3.81
	1.2	4507	1167	3.96
	1.4	4409	1207	4.10
	1.6	4137	1257	4.26
	1.8	3878	1311	4.45
	2.0	3835	1332	4.52
T5	0.2	5128	1078	3.88
	0.4	5061	1102	3.96
	0.6	4965	1131	4.07
	0.8	4899	1154	4.15
	1.0	4779	1182	4.25
	1.2	4668	1214	4.37
	1.4	4583	1242	4.47
	1.6	4367	1283	4.61
	1.8	4137	1330	4.78
	2.0	4015	1356	4.88
T6	0.2	2308	613	0.61
	0.4	2028	682	0.68
	0.6	1744	739	0.73
	0.8	1619	784	0.78
	1.0	-	-	-
	1.2	-	-	-
	1.4	-	-	-
	1.6	-	-	-
	1.8	-	-	-
	2.0	-	-	-

Horizontal Flow				
Speed Tap	ESP	CFM	RPM	BHP
T1	0.2	2735	543	0.54
	0.4	2600	606	0.60
	0.6	-	-	-
	0.8	-	-	-
	1.0	-	-	-
	1.2	-	-	-
	1.4	-	-	-
	1.6	-	-	-
	1.8	-	-	-
	2.0	-	-	-
T2	0.2	4297	761	1.68
	0.4	4168	801	1.76
	0.6	4081	844	1.86
	0.8	4030	856	1.89
	1.0	3939	926	2.04
	1.2	3789	966	2.13
	1.4	3553	1033	2.27
	1.6	3290	1090	2.40
	1.8	3097	1158	2.55
	2.0	2906	1192	2.63
T3	0.2	4165	735	1.53
	0.4	4089	772	1.61
	0.6	3985	824	1.72
	0.8	-	-	-
	1.0	-	-	-
	1.2	-	-	-
	1.4	-	-	-
	1.6	-	-	-
	1.8	-	-	-
	2.0	-	-	-
T4	0.2	5300	888	3.01
	0.4	5215	918	3.12
	0.6	5121	951	3.23
	0.8	5044	979	3.32
	1.0	4957	1015	3.44
	1.2	4861	1040	3.53
	1.4	4769	1082	3.67
	1.6	4665	1099	3.73
	1.8	4563	1150	3.90
	2.0	4455	1181	4.01
T5	0.2	5478	900	3.05
	0.4	5390	936	3.17
	0.6	5309	971	3.29
	0.8	5216	1003	3.40
	1.0	5127	1036	3.52
	1.2	5046	1067	3.62
	1.4	4954	1096	3.72
	1.6	4872	1128	3.83
	1.8	4794	1156	3.92
	2.0	4681	1188	4.03
T6	0.2	2644	545	0.54
	0.4	2483	620	0.61
	0.6	2299	683	0.68
	0.8	1979	773	0.77
	1.0	1758	817	0.81
	1.2	1558	877	0.87
	1.4	1448	920	0.91
	1.6	-	-	-
	1.8	-	-	-
	2.0	-	-	-

12.5 Ton • 130 MBH Gas Heat Exchanger • High Static Direct Drive

Models: DRG1503WL, DRG1504WL, DRG1507WL

Down Flow				
Speed Tap	ESP	CFM	RPM	BHP
T7	0.2	-	-	-
	0.4	2903	798	1.24
	0.6	2673	845	1.31
	0.8	2525	888	1.37
	1.0	2282	933	1.44
	1.2	1982	972	1.50
	1.4	1803	1007	1.56
	1.6	1671	1031	1.60
	1.8	1475	1065	1.65
	2.0	1335	1097	1.70
T8	0.2	3136	755	1.22
	0.4	3006	812	1.32
	0.6	2794	858	1.39
	0.8	2632	901	1.46
	1.0	2409	945	1.53
	1.2	2114	984	1.59
	1.4	1963	1025	1.66
	1.6	1854	1046	1.70
	1.8	-	-	-
	2.0	-	-	-
T9	0.2	3308	785	1.39
	0.4	3202	839	1.48
	0.6	3028	883	1.56
	0.8	2838	925	1.63
	1.0	2655	967	1.71
	1.2	2380	1007	1.78
	1.4	2257	1056	1.86
	1.6	2164	1076	1.90
	1.8	1994	1113	1.97
	2.0	1914	1139	2.01
T10	0.2	3472	814	1.56
	0.4	3384	865	1.65
	0.6	3244	907	1.73
	0.8	3032	948	1.81
	1.0	2886	989	1.89
	1.2	2639	1029	1.97
	1.4	2515	1083	2.07
	1.6	2411	1105	2.11
	1.8	2255	1141	2.18
	2.0	2192	1165	2.22

Horizontal Flow				
Speed Tap	ESP	CFM	RPM	BHP
T7	0.2	-	-	-
	0.4	-	-	-
	0.6	-	-	-
	0.8	-	-	-
	1.0	-	-	-
	1.2	2716	928	1.44
	1.4	2495	989	1.53
	1.6	2298	1033	1.60
	1.8	2137	1076	1.66
	2.0	2078	1101	1.70
T8	0.2	3602	665	1.08
	0.4	3491	707	1.15
	0.6	3379	759	1.23
	0.8	3205	818	1.33
	1.0	3052	874	1.42
	1.2	2852	932	1.51
	1.4	2617	995	1.61
	1.6	2401	1045	1.69
	1.8	2234	1092	1.77
	2.0	2196	1112	1.80
T9	0.2	3793	691	1.22
	0.4	3667	731	1.29
	0.6	3566	780	1.38
	0.8	3441	827	1.46
	1.0	3306	887	1.57
	1.2	3114	939	1.66
	1.4	2858	1006	1.78
	1.6	2608	1066	1.88
	1.8	2426	1123	1.98
	2.0	2404	1132	2.00
T10	0.2	-	-	-
	0.4	3835	756	1.44
	0.6	3741	801	1.53
	0.8	3656	835	1.60
	1.0	3536	900	1.72
	1.2	3355	947	1.81
	1.4	3092	1015	1.94
	1.6	2821	1080	2.06
	1.8	2627	1152	2.20
	2.0	2584	1152	2.20

12.5 Ton • 180 MBH Gas Heat Exchanger • Standard Static Direct Drive

Models: DRG1503DM, DRG1504DM, DRG1507DM

Down Flow				
Speed Tap	**ESP**	**CFM**	**RPM**	**BHP**
T1	0.2	2377	559	0.52
	0.4	-	-	-
	0.6	-	-	-
	0.8	-	-	-
T2	0.2	3178	662	0.93
	0.4	3007	705	0.99
	0.6	2856	751	1.05
	0.8	2533	822	1.16
T3	0.2	3944	784	1.59
	0.4	3783	823	1.67
	0.6	-	-	-
	0.8	-	-	-
T4	0.2	4435	842	2.08
	0.4	4287	886	2.19
	0.6	4153	922	2.28
	0.8	4025	952	2.36
T5	0.2	4719	897	2.50
	0.4	4587	929	2.59
	0.6	4458	962	2.68
	0.8	4329	993	2.77
T6	0.2	2072	515	0.39
	0.4	-	-	-
	0.6	-	-	-
	0.8	-	-	-
T7	0.2	2634	596	0.64
	0.4	2464	655	0.71
	0.6	2245	716	0.77
	0.8	1963	785	0.85
T8	0.2	3004	649	0.86
	0.4	2863	699	0.92
	0.6	2675	752	0.99
	0.8	-	-	-
T9	0.2	3250	684	1.02
	0.4	3106	729	1.09
	0.6	2943	776	1.16
	0.8	2694	836	1.25
T10	0.2	3474	714	1.19
	0.4	3314	759	1.27
	0.6	3178	799	1.33
	0.8	3035	841	1.40

Horizontal Flow				
Speed Tap	**ESP**	**CFM**	**RPM**	**BHP**
T1	0.2	2478	525	0.49
	0.4	-	-	-
	0.6	-	-	-
	0.8	-	-	-
T2	0.2	3261	616	0.87
	0.4	3134	667	0.94
	0.6	3011	717	1.01
	0.8	2786	779	1.09
T3	0.2	4019	720	1.46
	0.4	3926	756	1.53
	0.6	3807	805	1.63
	0.8	-	-	-
T4	0.2	4484	786	1.95
	0.4	4364	830	2.05
	0.6	4287	863	2.14
	0.8	4194	899	2.23
T5	0.2	4777	830	2.31
	0.4	4680	865	2.41
	0.6	4581	901	2.51
	0.8	4485	934	2.60
T6	0.2	2181	490	0.37
	0.4	1930	540	0.41
	0.6	-	-	-
	0.8	-	-	-
T7	0.2	2728	556	0.60
	0.4	2519	587	0.63
	0.6	2428	683	0.74
	0.8	2154	755	0.82
T8	0.2	3097	601	0.79
	0.4	2961	712	0.94
	0.6	2776	707	0.93
	0.8	2632	763	1.01
T9	0.2	3347	632	0.94
	0.4	3147	684	1.02
	0.6	3015	723	1.08
	0.8	2882	780	1.16
T10	0.2	3605	663	1.10
	0.4	3377	708	1.18
	0.6	3240	746	1.24
	0.8	3121	801	1.34

12.5 Ton • 180 MBH Gas Heat Exchanger • Medium Static Direct Drive

Models: DRG1503LM, DRG1504LM, DRG1507LM

Down Flow				
Speed Tap	**ESP**	**CFM**	**RPM**	**BHP**
T1	0.2	2377	559	0.52
	0.4	-	-	-
	0.6	-	-	-
	0.8	-	-	-
	1.0	-	-	-
	1.2	-	-	-
	1.4	-	-	-
T2	0.2	3655	740	1.32
	0.4	3495	782	1.40
	0.6	3361	820	1.46
	0.8	3231	857	1.53
	1.0	2967	915	1.63
	1.2	2685	969	1.73
	1.4	2550	1001	1.79
T3	0.2	3944	784	1.59
	0.4	3783	823	1.67
	0.6	-	-	-
	0.8	-	-	-
	1.0	-	-	-
	1.2	-	-	-
	1.4	-	-	-
T4	0.2	4536	878	2.30
	0.4	4407	910	2.38
	0.6	4304	939	2.46
	0.8	4176	974	2.55
	1.0	4066	1004	2.63
	1.2	3946	1036	2.71
	1.4	3826	1067	2.79
T5	0.2	4719	897	2.50
	0.4	4587	929	2.59
	0.6	4458	962	2.68
	0.8	4329	993	2.77
	1.0	4211	1025	2.86
	1.2	4087	1057	2.94
	1.4	3975	1087	3.03
T6	0.2	2379	559	0.52
	0.4	2161	626	0.58
	0.6	1927	690	0.64
	0.8	-	-	-
	1.0	-	-	-
	1.2	-	-	-
	1.4	-	-	-
T7	0.2	3161	672	0.96
	0.4	2995	722	1.03
	0.6	2866	762	1.09
	0.8	2551	840	1.20
	1.0	2392	878	1.25
	1.2	2198	923	1.32
	1.4	2034	961	1.37
T8	0.2	3310	692	1.06
	0.4	3163	736	1.13
	0.6	3006	782	1.20
	0.8	2765	840	1.29
	1.0	2540	894	1.37
	1.2	-	-	-
	1.4	-	-	-
T9	0.2	3586	732	1.28
	0.4	3419	772	1.35
	0.6	3288	811	1.42
	0.8	3089	858	1.50
	1.0	2878	909	1.59
	1.2	2754	948	1.66
	1.4	-	-	-
T10	0.2	3834	767	1.51
	0.4	3647	805	1.59
	0.6	3528	839	1.65
	0.8	3369	876	1.73
	1.0	3183	923	1.82
	1.2	3149	962	1.90
	1.4	2667	1024	2.02

Horizontal Flow				
Speed Tap	**ESP**	**CFM**	**RPM**	**BHP**
T1	0.2	2478	525	0.49
	0.4	-	-	-
	0.6	-	-	-
	0.8	-	-	-
	1.0	-	-	-
	1.2	-	-	-
	1.4	-	-	-
T2	0.2	3743	682	1.22
	0.4	3661	715	1.28
	0.6	3519	772	1.38
	0.8	3457	814	1.45
	1.0	3294	858	1.53
	1.2	3051	924	1.65
	1.4	2667	995	1.78
T3	0.2	4019	720	1.46
	0.4	3926	756	1.53
	0.6	3807	805	1.63
	0.8	-	-	-
	1.0	-	-	-
	1.2	-	-	-
	1.4	-	-	-
T4	0.2	4609	807	2.11
	0.4	4517	843	2.21
	0.6	4424	882	2.31
	0.8	4323	915	2.40
	1.0	4216	951	2.49
	1.2	4115	989	2.59
	1.4	4010	1025	2.68
T5	0.2	4777	830	2.31
	0.4	4680	865	2.41
	0.6	4581	901	2.51
	0.8	4485	934	2.60
	1.0	4387	970	2.70
	1.2	4285	1005	2.80
	1.4	4184	1039	2.89
T6	0.2	2478	525	0.49
	0.4	2198	539	0.50
	0.6	2096	668	0.62
	0.8	-	-	-
	1.0	-	-	-
	1.2	-	-	-
	1.4	-	-	-
T7	0.2	3256	621	0.89
	0.4	3060	673	0.96
	0.6	2927	713	1.02
	0.8	2787	773	1.10
	1.0	2516	807	1.15
	1.2	2205	837	1.20
	1.4	2046	919	1.31
T8	0.2	3409	640	0.98
	0.4	3206	690	1.06
	0.6	3073	727	1.12
	0.8	2943	785	1.21
	1.0	2731	823	1.26
	1.2	2519	873	1.3
	1.4	-	-	-
T9	0.2	3697	677	1.19
	0.4	3487	722	1.27
	0.6	3346	758	1.33
	0.8	3228	812	1.42
	1.0	3136	862	1.51
	1.2	2969	911	1.60
	1.4	2739	979	1.72
T10	0.2	3963	713	1.40
	0.4	3752	752	1.48
	0.6	3607	787	1.55
	0.8	3497	839	1.65
	1.0	3398	881	1.74
	1.2	3217	925	1.82
	1.4	3004	994	1.96

12.5 Ton • 180 MBH Gas Heat Exchanger • High Static Direct Drive

Models: DRG1503WM, DRG1504WM, DRG1507WM

Down Flow				
Speed Tap	ESP	CFM	RPM	BHP
T1	0.2	2511	639	0.63
	0.4	-	-	-
	0.6	-	-	-
	0.8	-	-	-
	1.0	-	-	-
	1.2	-	-	-
	1.4	-	-	-
	1.6	-	-	-
	1.8	-	-	-
	2.0	-	-	-
T2	0.2	3737	894	1.97
	0.4	3699	919	2.03
	0.6	3604	952	2.10
	0.8	3476	990	2.18
	1.0	3276	1035	2.28
	1.2	3052	1082	2.38
	1.4	2890	1120	2.47
	1.6	2738	1154	2.54
	1.8	2584	1186	2.61
	2.0	2499	1207	2.66
T3	0.2	3953	863	1.80
	0.4	3837	903	1.88
	0.6	-	-	-
	0.8	-	-	-
	1.0	-	-	-
	1.2	-	-	-
	1.4	-	-	-
	1.6	-	-	-
	1.8	-	-	-
	2.0	-	-	-
T4	0.2	4964	1024	3.47
	0.4	4909	1046	3.55
	0.6	4808	1079	3.66
	0.8	4764	1096	3.72
	1.0	4626	1123	3.81
	1.2	4507	1167	3.96
	1.4	4409	1207	4.10
	1.6	4137	1257	4.26
	1.8	3878	1311	4.45
	2.0	3835	1332	4.52
T5	0.2	5128	1078	3.88
	0.4	5061	1102	3.96
	0.6	4965	1131	4.07
	0.8	4899	1154	4.15
	1.0	4779	1182	4.25
	1.2	4668	1214	4.37
	1.4	4583	1242	4.47
	1.6	4367	1283	4.61
	1.8	4137	1330	4.78
	2.0	4015	1356	4.88
T6	0.2	2642	670	0.83
	0.4	2424	734	0.91
	0.6	2138	787	0.97
	0.8	2032	831	1.03
	1.0	-	-	-
	1.2	-	-	-
	1.4	-	-	-
	1.6	-	-	-
	1.8	-	-	-
	2.0	-	-	-

Horizontal Flow				
Speed Tap	ESP	CFM	RPM	BHP
T1	0.2	2735	543	0.54
	0.4	2600	606	0.60
	0.6	-	-	-
	0.8	-	-	-
	1.0	-	-	-
	1.2	-	-	-
	1.4	-	-	-
	1.6	-	-	-
	1.8	-	-	-
	2.0	-	-	-
T2	0.2	4297	761	1.68
	0.4	4168	801	1.76
	0.6	4081	844	1.86
	0.8	4030	856	1.89
	1.0	3939	926	2.04
	1.2	3789	966	2.13
	1.4	3553	1033	2.27
	1.6	3290	1090	2.40
	1.8	3097	1158	2.55
	2.0	2906	1192	2.63
T3	0.2	4165	735	1.53
	0.4	4089	772	1.61
	0.6	3985	824	1.72
	0.8	-	-	-
	1.0	-	-	-
	1.2	-	-	-
	1.4	-	-	-
	1.6	-	-	-
	1.8	-	-	-
	2.0	-	-	-
T4	0.2	5300	888	3.01
	0.4	5215	918	3.12
	0.6	5121	951	3.23
	0.8	5044	979	3.32
	1.0	4957	1015	3.44
	1.2	4861	1040	3.53
	1.4	4769	1082	3.67
	1.6	4665	1099	3.73
	1.8	4563	1150	3.90
	2.0	4455	1181	4.01
T5	0.2	5478	900	3.05
	0.4	5390	936	3.17
	0.6	5309	971	3.29
	0.8	5216	1003	3.40
	1.0	5127	1036	3.52
	1.2	5046	1067	3.62
	1.4	4954	1096	3.72
	1.6	4872	1128	3.83
	1.8	4794	1156	3.92
	2.0	4681	1188	4.03
T6	0.2	3038	593	0.73
	0.4	2944	646	0.80
	0.6	2790	708	0.87
	0.8	2484	795	0.98
	1.0	2287	839	1.03
	1.2	2082	906	1.12
	1.4	1935	956	1.18
	1.6	-	-	-
	1.8	-	-	-
	2.0	-	-	-

12.5 Ton • 180 MBH Gas Heat Exchanger • High Static Direct Drive

Models: DRG1503WM, DRG1504WM, DRG1507WM

Down Flow				
Speed Tap	**ESP**	**CFM**	**RPM**	**BHP**
T7	0.2	3338	800	1.43
	0.4	3257	846	1.51
	0.6	3135	889	1.59
	0.8	2997	928	1.66
	1.0	2772	977	1.75
	1.2	2524	1027	1.83
	1.4	2381	1057	1.89
	1.6	2249	1086	1.94
	1.8	2096	1121	2.00
	2.0	2026	1147	2.05
T8	0.2	3731	860	1.85
	0.4	3658	907	1.95
	0.6	3568	945	2.03
	0.8	3334	985	2.12
	1.0	3233	1023	2.20
	1.2	3041	1063	2.29
	1.4	2883	1118	2.41
	1.6	2729	1147	2.47
	1.8	2587	1180	2.54
	2.0	2525	1203	2.59
T9	0.2	3877	887	2.04
	0.4	3804	930	2.14
	0.6	3734	966	2.22
	0.8	3502	1005	2.31
	1.0	3416	1042	2.39
	1.2	3255	1082	2.49
	1.4	3070	1135	2.61
	1.6	2883	1168	2.68
	1.8	2743	1199	2.75
	2.0	2669	1223	2.81
T10	0.2	4016	912	2.23
	0.4	3936	952	2.33
	0.6	3878	987	2.41
	0.8	3659	1025	2.50
	1.0	3577	1060	2.59
	1.2	3443	1100	2.69
	1.4	3235	1150	2.81
	1.6	3020	1185	2.89
	1.8	2878	1215	2.97
	2.0	2786	1242	3.03

Horizontal Flow				
Speed Tap	**ESP**	**CFM**	**RPM**	**BHP**
T7	0.2	3805	695	1.24
	0.4	3702	740	1.32
	0.6	3604	785	1.40
	0.8	3490	833	1.49
	1.0	3390	879	1.57
	1.2	3220	935	1.67
	1.4	2939	1006	1.80
	1.6	2663	1072	1.91
	1.8	2474	1119	2.00
	2.0	2431	1134	2.03
T8	0.2	4243	753	1.62
	0.4	4111	794	1.71
	0.6	4023	836	1.80
	0.8	3970	852	1.83
	1.0	3875	921	1.98
	1.2	3719	962	2.07
	1.4	3475	1030	2.22
	1.6	3204	1090	2.35
	1.8	3009	1171	2.52
	2.0	2852	1185	2.55
T9	0.2	4392	774	1.78
	0.4	4274	814	1.87
	0.6	4186	857	1.97
	0.8	4133	864	1.98
	1.0	4050	934	2.15
	1.2	3912	974	2.24
	1.4	3695	1037	2.38
	1.6	3449	1089	2.50
	1.8	3265	1140	2.62
	2.0	3008	1205	2.77
T10	0.2	4530	794	1.94
	0.4	4433	832	2.03
	0.6	4343	875	2.14
	0.8	4276	878	2.14
	1.0	4202	947	2.31
	1.2	4083	986	2.41
	1.4	3904	1045	2.55
	1.6	3697	1085	2.65
	1.8	3534	1128	2.75
	2.0	3172	1224	2.99

12.5 Ton • 240 MBH Gas Heat Exchanger • Standard Static Direct Drive

Models: DRG1503DH, DRG1504DH, DRG1507DH

Down Flow				
Speed Tap	**ESP**	**CFM**	**RPM**	**BHP**
T1	0.2	2377	559	0.52
	0.4	-	-	-
	0.6	-	-	-
	0.8	-	-	-
T2	0.2	3178	662	0.93
	0.4	3007	705	0.99
	0.6	2856	751	1.05
	0.8	2533	822	1.16
T3	0.2	3944	784	1.59
	0.4	3783	823	1.67
	0.6	-	-	-
	0.8	-	-	-
T4	0.2	4435	842	2.08
	0.4	4287	886	2.19
	0.6	4153	922	2.28
	0.8	4025	952	2.36
T5	0.2	4719	897	2.50
	0.4	4587	929	2.59
	0.6	4458	962	2.68
	0.8	4329	993	2.77
T6	0.2	2227	538	0.45
	0.4	-	-	-
	0.6	-	-	-
	0.8	-	-	-
T7	0.2	2737	611	0.70
	0.4	2580	667	0.77
	0.6	2368	726	0.83
	0.8	2085	795	0.91
T8	0.2	3190	675	0.98
	0.4	3049	722	1.05
	0.6	2880	770	1.12
	0.8	-	-	-
T9	0.2	3714	750	1.40
	0.4	3536	788	1.47
	0.6	3412	825	1.54
	0.8	3235	867	1.61
T10	0.2	4133	809	1.84
	0.4	3953	848	1.93
	0.6	3812	881	2.00
	0.8	3676	912	2.07

Horizontal Flow				
Speed Tap	**ESP**	**CFM**	**RPM**	**BHP**
T1	0.2	2478	525	0.49
	0.4	-	-	-
	0.6	-	-	-
	0.8	-	-	-
T2	0.2	3261	616	0.87
	0.4	3134	667	0.94
	0.6	3011	717	1.01
	0.8	2786	779	1.09
T3	0.2	4019	720	1.46
	0.4	3926	756	1.53
	0.6	3807	805	1.63
	0.8	-	-	-
T4	0.2	4484	786	1.95
	0.4	4364	830	2.05
	0.6	4287	863	2.14
	0.8	4194	899	2.23
T5	0.2	4777	830	2.31
	0.4	4680	865	2.41
	0.6	4581	901	2.51
	0.8	4485	934	2.60
T6	0.2	2330	508	0.43
	0.4	-	-	-
	0.6	-	-	-
	0.8	-	-	-
T7	0.2	2831	568	0.65
	0.4	2655	616	0.71
	0.6	2547	689	0.79
	0.8	2325	759	0.87
T8	0.2	3286	625	0.91
	0.4	3092	677	0.98
	0.6	2952	716	1.04
	0.8	2818	775	1.12
T9	0.2	3833	695	1.29
	0.4	3618	737	1.37
	0.6	3479	771	1.44
	0.8	3366	825	1.54
T10	0.2	4297	759	1.73
	0.4	4107	793	1.80
	0.6	3960	842	1.92
	0.8	3859	876	1.99

12.5 Ton • 240 MBH Gas Heat Exchanger • Medium Static Direct Drive

Models: DRG1503LH, DRG1504LH, DRG1507LH

Down Flow				
Speed Tap	**ESP**	**CFM**	**RPM**	**BHP**
T1	0.2	2377	559	0.52
	0.4	-	-	-
	0.6	-	-	-
	0.8	-	-	-
	1.0	-	-	-
	1.2	-	-	-
	1.4	-	-	-
T2	0.2	3655	740	1.32
	0.4	3495	782	1.40
	0.6	3361	820	1.46
	0.8	3231	857	1.53
	1.0	2967	915	1.63
	1.2	2685	969	1.73
	1.4	2550	1001	1.79
T3	0.2	3944	784	1.59
	0.4	3783	823	1.67
	0.6	-	-	-
	0.8	-	-	-
	1.0	-	-	-
	1.2	-	-	-
	1.4	-	-	-
T4	0.2	4536	878	2.30
	0.4	4407	910	2.38
	0.6	4304	939	2.46
	0.8	4176	974	2.55
	1.0	4066	1004	2.63
	1.2	3946	1036	2.71
	1.4	3826	1067	2.79
T5	0.2	4719	897	2.50
	0.4	4587	929	2.59
	0.6	4458	962	2.68
	0.8	4329	993	2.77
	1.0	4211	1025	2.86
	1.2	4087	1057	2.94
	1.4	3975	1087	3.03
T6	0.2	2669	601	0.66
	0.4	2504	659	0.73
	0.6	2287	719	0.79
	0.8	-	-	-
	1.0	-	-	-
	1.2	-	-	-
	1.4	-	-	-
T7	0.2	3310	692	1.06
	0.4	3163	736	1.13
	0.6	3006	782	1.20
	0.8	2765	840	1.29
	1.0	2540	894	1.37
	1.2	2390	935	1.44
	1.4	2163	988	1.52
T8	0.2	3834	767	1.51
	0.4	3647	805	1.59
	0.6	3528	839	1.65
	0.8	3369	876	1.73
	1.0	3183	923	1.82
	1.2	3149	962	1.90
	1.4	-	-	-
T9	0.2	4218	823	1.96
	0.4	4046	860	2.05
	0.6	3902	895	2.13
	0.8	3774	927	2.21
	1.0	3631	963	2.29
	1.2	3485	1000	2.38
	1.4	3327	1032	2.46
T10	0.2	4537	901	2.51
	0.4	4382	931	2.59
	0.6	4251	961	2.68
	0.8	4142	989	2.75
	1.0	4026	1019	2.84
	1.2	3906	1046	2.91
	1.4	3763	1078	3.00

Horizontal Flow				
Speed Tap	**ESP**	**CFM**	**RPM**	**BHP**
T1	0.2	2478	525	0.49
	0.4	-	-	-
	0.6	-	-	-
	0.8	-	-	-
	1.0	-	-	-
	1.2	-	-	-
	1.4	-	-	-
T2	0.2	3743	682	1.22
	0.4	3661	715	1.28
	0.6	3519	772	1.38
	0.8	3457	814	1.45
	1.0	3294	858	1.53
	1.2	3051	924	1.65
	1.4	2667	995	1.78
T3	0.2	4019	720	1.46
	0.4	3926	756	1.53
	0.6	3807	805	1.63
	0.8	-	-	-
	1.0	-	-	-
	1.2	-	-	-
	1.4	-	-	-
T4	0.2	4609	807	2.11
	0.4	4517	843	2.21
	0.6	4424	882	2.31
	0.8	4323	915	2.40
	1.0	4216	951	2.49
	1.2	4115	989	2.59
	1.4	4010	1025	2.68
T5	0.2	4777	830	2.31
	0.4	4680	865	2.41
	0.6	4581	901	2.51
	0.8	4485	934	2.60
	1.0	4387	970	2.70
	1.2	4285	1005	2.80
	1.4	4184	1039	2.89
T6	0.2	2763	560	0.62
	0.4	2565	596	0.66
	0.6	2469	685	0.76
	0.8	2212	756	0.83
	1.0	-	-	-
	1.2	-	-	-
	1.4	-	-	-
T7	0.2	3409	640	0.98
	0.4	3206	690	1.06
	0.6	3073	727	1.12
	0.8	2943	785	1.21
	1.0	2731	823	1.26
	1.2	2519	873	1.34
	1.4	2284	938	1.44
T8	0.2	3963	713	1.40
	0.4	3752	752	1.48
	0.6	3607	787	1.55
	0.8	3497	839	1.65
	1.0	3398	881	1.74
	1.2	3217	925	1.8
	1.4	3004	994	2.0
T9	0.2	4404	775	1.84
	0.4	4224	807	1.92
	0.6	4087	852	2.03
	0.8	3989	888	2.11
	1.0	3865	925	2.20
	1.2	3723	963	2.29
	1.4	3608	999	2.38
T10	0.2	4777	830	2.31
	0.4	5442	854	2.38
	0.6	4581	901	2.51
	0.8	4322	934	2.60
	1.0	4387	970	2.70
	1.2	4080	1002	2.79
	1.4	3916	1037	2.89

12.5 Ton • 240 MBH Gas Heat Exchanger • High Static Direct Drive

Models: DRG1503WH, DRG1504WH, DRG1507WH

Down Flow				
Speed Tap	ESP	CFM	RPM	BHP
T1	0.2	2511	639	0.63
	0.4	-	-	-
	0.6	-	-	-
	0.8	-	-	-
	1.0	-	-	-
	1.2	-	-	-
	1.4	-	-	-
	1.6	-	-	-
	1.8	-	-	-
	2.0	-	-	-
T2	0.2	3737	894	1.97
	0.4	3699	919	2.03
	0.6	3604	952	2.10
	0.8	3476	990	2.18
	1.0	3276	1035	2.28
	1.2	3052	1082	2.38
	1.4	2890	1120	2.47
	1.6	2738	1154	2.54
	1.8	2584	1186	2.61
	2.0	2499	1207	2.66
T3	0.2	3953	863	1.80
	0.4	3837	903	1.88
	0.6	-	-	-
	0.8	-	-	-
	1.0	-	-	-
	1.2	-	-	-
	1.4	-	-	-
	1.6	-	-	-
	1.8	-	-	-
	2.0	-	-	-
T4	0.2	4964	1024	3.47
	0.4	4909	1046	3.55
	0.6	4808	1079	3.66
	0.8	4764	1096	3.72
	1.0	4626	1123	3.81
	1.2	4507	1167	3.96
	1.4	4409	1207	4.10
	1.6	4137	1257	4.26
	1.8	3878	1311	4.45
	2.0	3835	1332	4.52
T5	0.2	5128	1078	3.88
	0.4	5061	1102	3.96
	0.6	4965	1131	4.07
	0.8	4899	1154	4.15
	1.0	4779	1182	4.25
	1.2	4668	1214	4.37
	1.4	4583	1242	4.47
	1.6	4367	1283	4.61
	1.8	4137	1330	4.78
	2.0	4015	1356	4.88
T6	0.2	2642	670	0.83
	0.4	2424	734	0.91
	0.6	2138	787	0.97
	0.8	2032	831	1.03
	1.0	-	-	-
	1.2	-	-	-
	1.4	-	-	-
	1.6	-	-	-
	1.8	-	-	-
	2.0	-	-	-

Horizontal Flow				
Speed Tap	ESP	CFM	RPM	BHP
T1	0.2	2735	543	0.54
	0.4	2600	606	0.60
	0.6	-	-	-
	0.8	-	-	-
	1.0	-	-	-
	1.2	-	-	-
	1.4	-	-	-
	1.6	-	-	-
	1.8	-	-	-
	2.0	-	-	-
T2	0.2	4297	761	1.68
	0.4	4168	801	1.76
	0.6	4081	844	1.86
	0.8	4030	856	1.89
	1.0	3939	926	2.04
	1.2	3789	966	2.13
	1.4	3553	1033	2.27
	1.6	3290	1090	2.40
	1.8	3097	1158	2.55
	2.0	2906	1192	2.63
T3	0.2	4165	735	1.53
	0.4	4089	772	1.61
	0.6	3985	824	1.72
	0.8	-	-	-
	1.0	-	-	-
	1.2	-	-	-
	1.4	-	-	-
	1.6	-	-	-
	1.8	-	-	-
	2.0	-	-	-
T4	0.2	5300	888	3.01
	0.4	5215	918	3.12
	0.6	5121	951	3.23
	0.8	5044	979	3.32
	1.0	4957	1015	3.44
	1.2	4861	1040	3.53
	1.4	4769	1082	3.67
	1.6	4665	1099	3.73
	1.8	4563	1150	3.90
	2.0	4455	1181	4.01
T5	0.2	5478	900	3.05
	0.4	5390	936	3.17
	0.6	5309	971	3.29
	0.8	5216	1003	3.40
	1.0	5127	1036	3.52
	1.2	5046	1067	3.62
	1.4	4954	1096	3.72
	1.6	4872	1128	3.83
	1.8	4794	1156	3.92
	2.0	4681	1188	4.03
T6	0.2	3259	621	0.86
	0.4	3169	667	0.92
	0.6	3032	726	1.00
	0.8	2769	805	1.11
	1.0	2588	852	1.17
	1.2	2383	918	1.27
	1.4	2201	973	1.34
	1.6	-	-	-
	1.8	-	-	-
	2.0	-	-	-

12.5 Ton • 240 MBH Gas Heat Exchanger • High Static Direct Drive

Models: DRG1503WM, DRG1504WM, DRG1507WM

Down Flow				
Speed Tap	ESP	CFM	RPM	BHP
T7	0.2	3533	825	1.62
	0.4	3449	875	1.72
	0.6	3322	916	1.80
	0.8	3103	957	1.88
	1.0	2969	997	1.96
	1.2	2734	1037	2.04
	1.4	2605	1092	2.14
	1.6	2492	1115	2.19
	1.8	2340	1151	2.26
	2.0	2281	1174	2.31
T8	0.2	3830	878	1.97
	0.4	3757	922	2.07
	0.6	3682	959	2.16
	0.8	3448	999	2.25
	1.0	3358	1036	2.33
	1.2	3188	1076	2.42
	1.4	3011	1130	2.54
	1.6	2835	1162	2.61
	1.8	-	-	-
	2.0	-	-	-
T9	0.2	4169	940	2.45
	0.4	4075	977	2.55
	0.6	4019	1009	2.63
	0.8	3828	1046	2.73
	1.0	3739	1080	2.82
	1.2	3628	1119	2.92
	1.4	3405	1164	3.04
	1.6	3171	1200	3.13
	1.8	3021	1230	3.21
	2.0	2903	1262	3.30
T10	0.2	4464	995	2.96
	0.4	4325	1025	3.05
	0.6	4238	1053	3.13
	0.8	4143	1088	3.23
	1.0	4001	1118	3.32
	1.2	3910	1155	3.43
	1.4	3708	1187	3.53
	1.6	3493	1213	3.60
	1.8	3312	1251	3.72
	2.0	3137	1299	3.86

Horizontal Flow				
Speed Tap	ESP	CFM	RPM	BHP
T7	0.2	-	-	-
	0.4	-	-	-
	0.6	3807	809	1.59
	0.8	3732	839	1.65
	1.0	3619	905	1.78
	1.2	3443	950	1.87
	1.4	3180	1019	2.00
	1.6	2905	1084	2.13
	1.8	2709	1161	2.28
	2.0	2647	1160	2.28
T8	0.2	4345	768	1.73
	0.4	4221	808	1.82
	0.6	4134	850	1.91
	0.8	4082	860	1.93
	1.0	3995	930	2.09
	1.2	3851	970	2.18
	1.4	3624	1035	2.33
	1.6	3368	1090	2.45
	1.8	3179	1148	2.58
	2.0	2956	1199	2.70
T9	0.2	4675	815	2.13
	0.4	4607	850	2.22
	0.6	4514	895	2.34
	0.8	4421	896	2.34
	1.0	4355	962	2.51
	1.2	4255	1001	2.61
	1.4	4126	1052	2.75
	1.6	3975	1077	2.81
	1.8	3843	1128	2.95
	2.0	3566	1206	3.15
T10	0.2	4935	851	2.53
	0.4	4889	876	2.61
	0.6	4793	927	2.76
	0.8	4667	943	2.80
	1.0	4603	993	2.95
	1.2	4527	1028	3.06
	1.4	4465	1067	3.17
	1.6	4399	1067	3.17
	1.8	4327	1145	3.40
	2.0	4181	1168	3.47

7.5 Ton Models : DRG0903D, DRG0904D & DRG0907D with DDC Controls • Standard Static to 2.4 HP (0.2 ~ 0.8 Esp) • Down Flow

CFM	0.2			0.4			0.6			0.8			1.0		
	RPM	DDC %	BHP	RPM	DDC %	BHP	RPM	DDC %	BHP	RPM	DDC %	BHP	RPM	DDC %	BHP
1800	519	22	0.39	584	24	0.50	643	26	0.55	717	27	0.73	-	-	-
2000	554	26	0.46	618	27	0.58	676	29	0.63	747	31	0.84	-	-	-
2200	589	29	0.53	653	31	0.69	709	33	0.72	777	35	0.97	-	-	-
2400	624	33	0.63	687	35	0.81	743	37	0.83	807	39	1.11	-	-	-
2600	659	36	0.74	721	38	0.95	776	40	0.96	838	42	1.28	-	-	-
2800	693	40	0.86	756	42	1.11	809	44	1.10	868	46	1.47	-	-	-
3000	728	43	1.01	790	46	1.30	842	48	1.26	898	50	1.69	-	-	-
3200	763	47	1.19	824	49	1.53	875	51	1.45	928	53	1.94	-	-	-
3400	798	50	1.40	859	53	1.79	908	55	1.67	959	57	2.24	-	-	-
3600	833	53	1.64	893	57	2.10	941	59	1.92				-	-	-

Shaded area indicates air flow below 2250 SCFM (300 SCFM/ton) that is not recommended for High Stage cooling or heating.
Valid motor operating range for DDC% setting is 20 - 90.

HORIZONTAL FLOW

CFM	0.2			0.4			0.6			0.8			1.0		
	RPM	DDC %	BHP	RPM	DDC %	BHP	RPM	DDC %	BHP	RPM	DDC %	BHP	RPM	DDC %	BHP
1800	456	21	0.31	541	22	0.38	610	23	0.50	684	25	0.57	-	-	-
2000	486	24	0.37	568	25	0.44	636	27	0.58	706	29	0.64	-	-	-
2200	516	27	0.43	595	29	0.50	661	30	0.66	729	32	0.72	-	-	-
2400	546	31	0.51	622	32	0.58	687	34	0.76	751	36	0.81	-	-	-
2600	576	34	0.59	649	36	0.67	712	38	0.88	774	39	0.91	-	-	-
2800	606	38	0.70	676	39	0.77	737	41	1.01	796	43	1.03	-	-	-
3000	636	41	0.82	703	43	0.88	763	45	1.16	818	47	1.16	-	-	-
3200	666	45	0.96	730	46	1.02	788	48	1.33	841	50	1.31	-	-	-
3400	696	48	1.13	757	50	1.17	814	52	1.53	863	54	1.48	-	-	-
3600	726	52	1.32	784	53	1.34	839	55	1.76	886	57	1.66	-	-	-
3800	756	55	1.55	811	57	1.55	865	59	2.03	908	61	1.88	-	-	-

Shaded area indicates air flow below 2250 SCFM (300 SCFM/ton) that is not recommended for High Stage cooling or heating.
Valid motor operating range for DDC% setting is 20 - 90.

7.5 Ton Models : DRG0903L, DRG0904L & DRG0907L with DDC Controls • Medium Static to 2.4 HP (0.2 ~ 1.4 ESP) • Down Flow

CFM	0.2			0.4			0.6			0.8			1.0		
	RPM	DDC %	BHP	RPM	DDC %	BHP	RPM	DDC %	BHP	RPM	DDC %	BHP	RPM	DDC %	BHP
1400	449	16	0.28	516	17	0.36	577	18	0.41	656	20	0.55	742	24	0.66
1600	484	19	0.33	550	20	0.42	610	22	0.47	686	24	0.63	767	27	0.73
1800	519	22	0.39	584	24	0.50	643	26	0.55	717	27	0.73	793	31	0.80
2000	554	26	0.46	618	27	0.58	676	29	0.63	747	31	0.84	818	34	0.89
2200	589	29	0.53	653	31	0.69	709	33	0.72	777	35	0.97	844	38	0.98
2400	624	33	0.63	687	35	0.81	743	37	0.83	807	39	1.11	869	41	1.08
2600	659	36	0.74	721	38	0.95	776	40	0.96	838	42	1.28	895	45	1.20
2800	693	40	0.86	756	42	1.11	809	44	1.10	868	46	1.47	920	48	1.32
3000	728	43	1.01	790	46	1.30	842	48	1.26	898	50	1.69	946	52	1.46
3200	763	47	1.19	824	49	1.53	875	51	1.45	928	53	1.94	971	55	1.62
3400	798	50	1.40	859	53	1.79	908	55	1.67	959	57	2.24	997	58	1.79
3600	833	53	1.64	893	57	2.10	941	59	1.92	989	61	2.57	1022	62	1.97
3800	868	57	1.92	927	60	2.47	975	62	2.21	1019	64	2.96	1048	65	2.18

CFM	1.2			1.4			1.6			1.8			2.0		
	RPM	DDC %	BHP	RPM	DDC %	BHP	RPM	DDC %	BHP	RPM	DDC %	BHP	RPM	DDC %	BHP
1400	853	27	0.87	853	29	0.96	-	-	-	-	-	-	-	-	-
1600	871	30	0.96	876	32	1.04	-	-	-	-	-	-	-	-	-
1800	890	34	1.06	899	36	1.12	-	-	-	-	-	-	-	-	-
2000	908	37	1.17	922	39	1.22	-	-	-	-	-	-	-	-	-
2200	926	40	1.30	945	42	1.32	-	-	-	-	-	-	-	-	-
2400	945	44	1.43	968	46	1.43	-	-	-	-	-	-	-	-	-
2600	963	47	1.58	991	49	1.55	-	-	-	-	-	-	-	-	-
2800	981	50	1.75	1015	53	1.68	-	-	-	-	-	-	-	-	-
3000	1000	54	1.94	1038	56	1.82	-	-	-	-	-	-	-	-	-
3200	1018	57	2.14	1061	59	1.97	-	-	-	-	-	-	-	-	-
3400	1036	61	2.36	1084	63	2.13	-	-	-	-	-	-	-	-	-
3600	1055	64	2.61	1107	66	2.31	-	-	-	-	-	-	-	-	-
3800	1073	67	2.89	1130	70	2.50	-	-	-	-	-	-	-	-	-

Shaded area indicates air flow below 2250 SCFM (300 SCFM/ton) that is not recommended for High Stage cooling or heating.
Valid motor operating range for DDC% setting is 20 - 90.

HORIZONTAL FLOW

CFM	0.2			0.4			0.6			0.8			1.0		
	RPM	DDC %	BHP	RPM	DDC %	BHP	RPM	DDC %	BHP	RPM	DDC %	BHP	RPM	DDC %	BHP
1400													702	21	0.58
1600										661	22	0.50	724	25	0.64
1800	456	21	0.31	541	22	0.38	610	23	0.50	684	25	0.57	745	28	0.70
2000	486	24	0.37	568	25	0.44	636	27	0.58	706	29	0.64	766	31	0.78
2200	516	27	0.43	595	29	0.50	661	30	0.66	729	32	0.72	787	35	0.86
2400	546	31	0.51	622	32	0.58	687	34	0.76	751	36	0.81	809	38	0.95
2600	576	34	0.59	649	36	0.67	712	38	0.88	774	39	0.91	830	42	1.05
2800	606	38	0.70	676	39	0.77	737	41	1.01	796	43	1.03	851	45	1.16
3000	636	41	0.82	703	43	0.88	763	45	1.16	818	47	1.16	872	49	1.28
3200	666	45	0.96	730	46	1.02	788	48	1.33	841	50	1.31	894	52	1.41
3400	696	48	1.13	757	50	1.17	814	52	1.53	863	54	1.48	915	55	1.56
3600	726	52	1.32	784	53	1.34	839	55	1.76	886	57	1.66	936	59	1.73
3800	756	55	1.55	811	57	1.55	865	59	2.03	908	61	1.88	957	62	1.91
CFM	**1.2**			**1.4**			**1.6**			**1.8**			**2.0**		
	RPM	DDC %	BHP	RPM	DDC %	BHP	RPM	DDC %	BHP	RPM	DDC %	BHP	RPM	DDC %	BHP
1400	754	25	0.85	825	27	0.93	-	-	-	-	-	-	-	-	-
1600	774	28	0.93	843	30	1.01	-	-	-	-	-	-	-	-	-
1800	795	31	1.03	862	34	1.10	-	-	-	-	-	-	-	-	-
2000	816	34	1.14	880	37	1.19	-	-	-	-	-	-	-	-	-
2200	836	38	1.26	898	40	1.29	-	-	-	-	-	-	-	-	-
2400	857	41	1.39	917	43	1.39	-	-	-	-	-	-	-	-	-
2600	878	44	1.54	935	46	1.51	-	-	-	-	-	-	-	-	-
2800	899	48	1.70	954	50	1.64	-	-	-	-	-	-	-	-	-
3000	919	51	1.88	972	53	1.77	-	-	-	-	-	-	-	-	-
3200	940	54	2.08	990	56	1.92	-	-	-	-	-	-	-	-	-
3400	961	57	2.30	1009	59	2.08	-	-	-	-	-	-	-	-	-
3600	981	61	2.54	1027	62	2.25	-	-	-	-	-	-	-	-	-
3800	1002	64	2.81	1046	66	2.44	-	-	-	-	-	-	-	-	-

Shaded area indicates air flow below 2250 SCFM (300 SCFM/ton) that is not recommended for High Stage cooling or heating.
Valid motor operating range for DDC% setting is 20 - 90.

7.5 Ton Models : DRG0903W, DRG0904W & DRG0907W with DDC Controls • High Static to 3.5 HP (0.2 ~ 2.0 ESP) • Down Flow

CFM	0.2			0.4			0.6			0.8			1.0		
	RPM	DDC %	BHP	RPM	DDC %	BHP	RPM	DDC %	BHP	RPM	DDC %	BHP	RPM	DDC %	BHP
1800	519	22	0.39	584	24	0.50	643	26	0.55	717	27	0.73	793	31	0.80
2000	554	26	0.46	618	27	0.58	676	29	0.63	747	31	0.84	818	34	0.89
2200	589	29	0.53	653	31	0.69	709	33	0.72	777	35	0.97	844	38	0.98
2400	624	33	0.63	687	35	0.81	743	37	0.83	807	39	1.11	869	41	1.08
2600	659	36	0.74	721	38	0.95	776	40	0.96	838	42	1.28	895	45	1.20
2800	693	40	0.86	756	42	1.11	809	44	1.10	868	46	1.47	920	48	1.32
3000	728	43	1.01	790	46	1.30	842	48	1.26	898	50	1.69	946	52	1.46
3200	763	47	1.19	824	49	1.53	875	51	1.45	928	53	1.94	971	55	1.62
3400	798	50	1.40	859	53	1.79	908	55	1.67	959	57	2.24	997	58	1.79
3600	833	53	1.64	893	57	2.10	941	59	1.92	989	61	2.57	1022	62	1.97
3800	868	57	1.92	927	60	2.47	975	62	2.21	1019	64	2.96	1048	65	2.18
CFM	1.2			1.4			1.6			1.8			2.0		
	RPM	DDC %	BHP	RPM	DDC %	BHP	RPM	DDC %	BHP	RPM	DDC %	BHP	RPM	DDC %	BHP
1800	890	34	1.06	899	36	1.12	1023	39	1.42	1077	41	1.64	1129	44	1.90
2000	908	37	1.17	922	39	1.22	1036	42	1.54	1088	44	1.78	1140	47	2.06
2200	926	40	1.30	945	42	1.32	1048	46	1.66	1099	48	1.93	1151	50	2.23
2400	945	44	1.43	968	46	1.43	1060	49	1.80	1110	51	2.09	1161	53	2.41
2600	963	47	1.58	991	49	1.55	1073	52	1.95	1122	54	2.26	1172	57	2.61
2800	981	50	1.75	1015	53	1.68	1085	55	2.12	1133	58	2.45	1183	60	2.83
3000	1000	54	1.94	1038	56	1.82	1097	58	2.29	1144	61	2.65	1194	63	3.07
3200	1018	57	2.14	1061	59	1.97	1110	62	2.48	1155	64	2.87	1204	67	3.32
3400	1036	61	2.36	1084	63	2.13	1122	65	2.69	1166	67	3.11	1215	70	3.60
3600	1055	64	2.61	1107	66	2.31	1134	68	2.91	1178	71	3.37			
3800	1073	67	2.89	1130	70	2.50	1147	71	3.16						

Shaded area indicates air flow below 2250 SCFM (300 SCFM/ton) that is not recommended for High Stage cooling or heating.
Valid motor operating range for DDC% setting is 20 - 90.

HORIZONTAL FLOW

CFM	0.2			0.4			0.6			0.8			1.0		
	RPM	DDC %	BHP	RPM	DDC %	BHP	RPM	DDC %	BHP	RPM	DDC %	BHP	RPM	DDC %	BHP
1800	456	21	0.31	541	22	0.38	610	23	0.50	684	25	0.57	745	28	0.70
2000	486	24	0.37	568	25	0.44	636	27	0.58	706	29	0.64	766	31	0.78
2200	516	27	0.43	595	29	0.50	661	30	0.66	729	32	0.72	787	35	0.86
2400	546	31	0.51	622	32	0.58	687	34	0.76	751	36	0.81	809	38	0.95
2600	576	34	0.59	649	36	0.67	712	38	0.88	774	39	0.91	830	42	1.05
2800	606	38	0.70	676	39	0.77	737	41	1.01	796	43	1.03	851	45	1.16
3000	636	41	0.82	703	43	0.88	763	45	1.16	818	47	1.16	872	49	1.28
3200	666	45	0.96	730	46	1.02	788	48	1.33	841	50	1.31	894	52	1.41
3400	696	48	1.13	757	50	1.17	814	52	1.53	863	54	1.48	915	55	1.56
3600	726	52	1.32	784	53	1.34	839	55	1.76	886	57	1.66	936	59	1.73
3800	756	55	1.55	811	57	1.55	865	59	2.03	908	61	1.88	957	62	1.91
CFM	1.2			1.4			1.6			1.8			2.0		
	RPM	DDC %	BHP	RPM	DDC %	BHP	RPM	DDC %	BHP	RPM	DDC %	BHP	RPM	DDC %	BHP
1800	795	31	1.03	862	34	1.10	986	38	1.38	1040	41	1.33	1081	43	1.50
2000	816	34	1.14	880	37	1.19	992	41	1.50	1046	44	1.41	1088	46	1.59
2200	836	38	1.26	898	40	1.29	999	44	1.62	1053	47	1.50	1094	49	1.69
2400	857	41	1.39	917	43	1.39	1005	47	1.76	1059	49	1.59	1100	52	1.80
2600	878	44	1.54	935	46	1.51	1011	50	1.90	1066	52	1.69	1106	54	1.91
2800	899	48	1.70	954	50	1.64	1018	53	2.06	1072	55	1.80	1112	57	2.02
3000	919	51	1.88	972	53	1.77	1024	55	2.23	1079	58	1.91	1119	60	2.15
3200	940	54	2.08	990	56	1.92	1030	58	2.42	1085	60	2.02	1125	62	2.28
3400	961	57	2.30	1009	59	2.08	1037	61	2.62	1091	63	2.15	1131	65	2.42
3600	981	61	2.54	1027	62	2.25	1043	64	2.84	1098	66	2.28	1137	68	2.57
3800	1002	64	2.81	1046	66	2.44	1049	67	3.07	1104	69	2.42	1143	70	2.73

Shaded area indicates air flow below 2250 SCFM (300 SCFM/ton) that is not recommended for High Stage cooling or heating.
Valid motor operating range for DDC% setting is 20 - 90.

8.5 Ton Models: DRG1023D,DRG1024D & DRG1027D with DDC Controls • Standard Static to 2.4 HP (0.2 ~ 0.8 ESP) • Down Flow

CFM	0.2			0.4			0.6			0.8			1.0		
	RPM	DDC %	BHP	RPM	DDC %	BHP	RPM	DDC %	BHP	RPM	DDC %	BHP	RPM	DDC %	BHP
1600										678	21	0.55	-	-	-
1800				557	21	0.42	635	23	0.57	702	25	0.62	-	-	-
2000	509	23	0.41	586	25	0.48	661	27	0.66	727	29	0.70	-	-	-
2200	541	26	0.48	615	28	0.55	688	30	0.76	752	32	0.79	-	-	-
2400	572	30	0.56	645	32	0.64	714	34	0.87	776	36	0.89	-	-	-
2600	604	34	0.66	674	36	0.73	740	38	1.00	801	40	1.01	-	-	-
2800	635	37	0.77	703	39	0.84	767	42	1.15	826	44	1.14	-	-	-
3000	667	41	0.91	733	43	0.97	793	45	1.33	850	47	1.28	-	-	-
3200	698	44	1.06	762	47	1.11	820	49	1.52	875	51	1.44	-	-	-
3400	730	48	1.25	791	50	1.28	846	53	1.75	900	55	1.63	-	-	-
3600	761	52	1.47	820	54	1.48	872	57	2.02	924	59	1.83	-	-	-
3800	793	55	1.72	850	58	1.70	899	60	2.32	949	62	2.07	-	-	-

Shaded area indicates air flow below 2550 SCFM (300 SCFM/ton) that is not recommended for High Stage cooling or heating.
Valid motor operating range for DDC% setting is 20 - 90.

HORIZONTAL FLOW

CFM	0.2			0.4			0.6			0.8			1.0		
	RPM	DDC %	BHP	RPM	DDC %	BHP	RPM	DDC %	BHP	RPM	DDC %	BHP	RPM	DDC %	BHP
1600										649	21	0.55	-	-	-
1800	436	20	0.33	521	21	0.41	597	23	0.46	670	25	0.62	-	-	-
2000	463	23	0.39	546	25	0.47	620	27	0.52	691	29	0.69	-	-	-
2200	491	27	0.46	571	28	0.54	642	30	0.59	711	32	0.78	-	-	-
2400	519	30	0.54	596	32	0.62	665	34	0.67	732	36	0.88	-	-	-
2600	547	34	0.63	621	35	0.72	688	37	0.75	753	39	1.00	-	-	-
2800	575	37	0.74	646	39	0.82	710	41	0.85	773	43	1.12	-	-	-
3000	602	40	0.87	671	42	0.95	733	44	0.96	794	46	1.26	-	-	-
3200	630	44	1.02	696	46	1.09	756	48	1.08	815	50	1.43	-	-	-
3400	658	47	1.20	721	49	1.25	778	51	1.21	836	54	1.61	-	-	-
3600	686	51	1.41	746	53	1.44	801	55	1.37	856	57	1.81	-	-	-
3800	714	54	1.65	771	56	1.66	823	58	1.54	877	61	2.04	-	-	-

Shaded area indicates air flow below 2550 SCFM (300 SCFM/ton) that is not recommended for High Stage cooling or heating.
Valid motor operating range for DDC% setting is 20 - 90.

8.5 Ton Models: DRG1023L,DRG1024L & DRG1027L with DDC Controls • Medium Static to 3.5 HP (0.2 ~1.4 ESP) • Down Flow

CFM	0.2			0.4			0.6			0.8			1.0		
	RPM	DDC %	BHP	RPM	DDC %	BHP	RPM	DDC %	BHP	RPM	DDC %	BHP	RPM	DDC %	BHP
1600										678	21	0.55	757	23	0.73
1800				557	21	0.42	635	23	0.57	702	25	0.62	778	27	0.82
2000	509	23	0.41	586	25	0.48	661	27	0.66	727	29	0.70	799	31	0.93
2200	541	26	0.48	615	28	0.55	688	30	0.76	752	32	0.79	820	35	1.04
2400	572	30	0.56	645	32	0.64	714	34	0.87	776	36	0.89	841	38	1.18
2600	604	34	0.66	674	36	0.73	740	38	1.00	801	40	1.01	862	42	1.33
2800	635	37	0.77	703	39	0.84	767	42	1.15	826	44	1.14	883	46	1.50
3000	667	41	0.91	733	43	0.97	793	45	1.33	850	47	1.28	904	50	1.69
3200	698	44	1.06	762	47	1.11	820	49	1.52	875	51	1.44	925	54	1.90
3400	730	48	1.25	791	50	1.28	846	53	1.75	900	55	1.63	946	57	2.15
3600	761	52	1.47	820	54	1.48	872	57	2.02	924	59	1.83	967	61	2.42
3800	793	55	1.72	850	58	1.70	899	60	2.32	949	62	2.07	988	65	2.73

CFM	1.2			1.4			1.6			1.8			2.0		
	RPM	DDC %	BHP	RPM	DDC %	BHP	RPM	DDC %	BHP	RPM	DDC %	BHP	RPM	DDC %	BHP
1600	834	25	0.79	799	28	1.04	-	-	-	-	-	-	-	-	-
1800	853	29	0.88	822	32	1.14	-	-	-	-	-	-	-	-	-
2000	873	33	0.97	845	35	1.27	-	-	-	-	-	-	-	-	-
2200	892	37	1.07	868	39	1.40	-	-	-	-	-	-	-	-	-
2400	912	41	1.18	891	42	1.55	-	-	-	-	-	-	-	-	-
2600	932	45	1.31	914	46	1.71	-	-	-	-	-	-	-	-	-
2800	951	49	1.45	937	50	1.89	-	-	-	-	-	-	-	-	-
3000	971	52	1.60	960	53	2.09	-	-	-	-	-	-	-	-	-
3200	991	56	1.77	983	57	2.31	-	-	-	-	-	-	-	-	-
3400	1010	60	1.95	1006	61	2.55	-	-	-	-	-	-	-	-	-
3600	1030	64	2.16	1029	64	2.82	-	-	-	-	-	-	-	-	-
3800	1049	68	2.39	1052	68	3.11	-	-	-	-	-	-	-	-	-

Shaded area indicates air flow below 2550 SCFM (300 SCFM/ton) that is not recommended for High Stage cooling or heating.
Valid motor operating range for DDC% setting is 20 - 90.

HORIZONTAL FLOW

CFM	0.2			0.4			0.6			0.8			1.0		
	RPM	DDC %	BHP	RPM	DDC %	BHP	RPM	DDC %	BHP	RPM	DDC %	BHP	RPM	DDC %	BHP
1600										649	21	0.55	722	23	0.59
1800	436	20	0.33	521	21	0.41	597	23	0.46	670	25	0.62	740	27	0.65
2000	463	23	0.39	546	25	0.47	620	27	0.52	691	29	0.69	758	30	0.72
2200	491	27	0.46	571	28	0.54	642	30	0.59	711	32	0.78	777	34	0.80
2400	519	30	0.54	596	32	0.62	665	34	0.67	732	36	0.88	795	37	0.88
2600	547	34	0.63	621	35	0.72	688	37	0.75	753	39	1.00	814	41	0.97
2800	575	37	0.74	646	39	0.82	710	41	0.85	773	43	1.12	832	45	1.08
3000	602	40	0.87	671	42	0.95	733	44	0.96	794	46	1.26	851	48	1.19
3200	630	44	1.02	696	46	1.09	756	48	1.08	815	50	1.43	869	52	1.31
3400	658	47	1.20	721	49	1.25	778	51	1.21	836	54	1.61	888	56	1.45
3600	686	51	1.41	746	53	1.44	801	55	1.37	856	57	1.81	906	59	1.60
3800	714	54	1.65	771	56	1.66	823	58	1.54	877	61	2.04	925	63	1.77
CFM	**1.2**			**1.4**			**1.6**			**1.8**			**2.0**		
	RPM	DDC %	BHP	RPM	DDC %	BHP	RPM	DDC %	BHP	RPM	DDC %	BHP	RPM	DDC %	BHP
1600	787	25	0.76	830	28	0.92	-	-	-	-	-	-	-	-	-
1800	804	28	0.84	847	32	1.00	-	-	-	-	-	-	-	-	-
2000	820	32	0.93	864	35	1.08	-	-	-	-	-	-	-	-	-
2200	837	36	1.02	881	39	1.17	-	-	-	-	-	-	-	-	-
2400	854	40	1.13	898	42	1.27	-	-	-	-	-	-	-	-	-
2600	870	43	1.25	915	46	1.37	-	-	-	-	-	-	-	-	-
2800	887	47	1.38	932	49	1.49	-	-	-	-	-	-	-	-	-
3000	904	51	1.53	949	53	1.61	-	-	-	-	-	-	-	-	-
3200	920	54	1.69	966	56	1.74	-	-	-	-	-	-	-	-	-
3400	937	58	1.87	983	60	1.89	-	-	-	-	-	-	-	-	-
3600	954	62	2.06	1000	63	2.05	-	-	-	-	-	-	-	-	-
3800	971	65	2.28	1017	67	2.22	-	-	-	-	-	-	-	-	-

Shaded area indicates air flow below 2550 SCFM (300 SCFM/ton) that is not recommended for High Stage cooling or heating.
Valid motor operating range for DDC% setting is 20 - 90.

8.5 Ton Models: DRG1023W,DRG1024W & DRG1027W with DDC Controls • High Static to 3.5 HP (0.2 ~ 2.0 ESP) • Down Flow

CFM	0.2			0.4			0.6			0.8			1.0		
	RPM	DDC %	BHP	RPM	DDC %	BHP	RPM	DDC %	BHP	RPM	DDC %	BHP	RPM	DDC %	BHP
1600										678	21	0.55	757	23	0.73
1800				557	21	0.42	635	23	0.57	702	25	0.62	778	27	0.82
2000	509	23	0.41	586	25	0.48	661	27	0.66	727	29	0.70	799	31	0.93
2200	541	26	0.48	615	28	0.55	688	30	0.76	752	32	0.79	820	35	1.04
2400	572	30	0.56	645	32	0.64	714	34	0.87	776	36	0.89	841	38	1.18
2600	604	34	0.66	674	36	0.73	740	38	1.00	801	40	1.01	862	42	1.33
2800	635	37	0.77	703	39	0.84	767	42	1.15	826	44	1.14	883	46	1.50
3000	667	41	0.91	733	43	0.97	793	45	1.33	850	47	1.28	904	50	1.69
3200	698	44	1.06	762	47	1.11	820	49	1.52	875	51	1.44	925	54	1.90
3400	730	48	1.25	791	50	1.28	846	53	1.75	900	55	1.63	946	57	2.15
3600	761	52	1.47	820	54	1.48	872	57	2.02	924	59	1.83	967	61	2.42
3800	793	55	1.72	850	58	1.70	899	60	2.32	949	62	2.07	988	65	2.73
4000	824	59	2.02	879	61	1.95	925	64	2.67	974	66	2.33	1009	69	3.08
4200	856	62	2.37	908	65	2.25	951	68	3.07	998	70	2.63	1030	73	3.47
CFM	1.2			1.4			1.6			1.8			2.0		
	RPM	DDC %	BHP	RPM	DDC %	BHP	RPM	DDC %	BHP	RPM	DDC %	BHP	RPM	DDC %	BHP
1600	834	25	0.79	799	28	1.04	30	30	1.08	945	33	1.29	1006	32	1.39
1800	853	29	0.88	822	32	1.14	34	34	1.17	965	37	1.40	1025	36	1.51
2000	873	33	0.97	845	35	1.27	38	38	1.26	986	40	1.52	1045	40	1.63
2200	892	37	1.07	868	39	1.40	41	41	1.37	1007	44	1.64	1064	44	1.77
2400	912	41	1.18	891	42	1.55	45	45	1.48	1028	47	1.78	1084	48	1.92
2600	932	45	1.31	914	46	1.71	49	49	1.61	1049	51	1.93	1103	52	2.08
2800	951	49	1.45	937	50	1.89	52	52	1.74	1070	55	2.09	1122	57	2.25
3000	971	52	1.60	960	53	2.09	56	56	1.88	1091	58	2.27	1142	61	2.44
3200	991	56	1.77	983	57	2.31	60	60	2.04	1112	62	2.45	1161	65	2.64
3400	1010	60	1.95	1006	61	2.55	63	63	2.21	1133	66	2.66	1180	69	2.86
3600	1030	64	2.16	1029	64	2.82	67	67	2.39	1154	69	2.88	1200	73	3.10
3800	1049	68	2.39	1052	68	3.11	70	70	2.59	1175	73	3.12	1219	78	3.35
4000	1069	72	2.64	1075	71	3.44	74	74	2.81	1196	77	3.38	1239	82	3.63
4200	1089	76	2.91	1098	75	3.80	78	78	3.04						

Shaded area indicates air flow below 2550 SCFM (300 SCFM/ton) that is not recommended for High Stage cooling or heating.
Valid motor operating range for DDC% setting is 20 - 90.

HORIZONTAL FLOW

CFM	0.2			0.4			0.6			0.8			1.0		
	RPM	DDC %	BHP	RPM	DDC %	BHP	RPM	DDC %	BHP	RPM	DDC %	BHP	RPM	DDC %	BHP
1600										649	21	0.55	722	23	0.59
1800	436	20	0.33	521	21	0.41	597	23	0.46	670	25	0.62	740	27	0.65
2000	463	23	0.39	546	25	0.47	620	27	0.52	691	29	0.69	758	30	0.72
2200	491	27	0.46	571	28	0.54	642	30	0.59	711	32	0.78	777	34	0.80
2400	519	30	0.54	596	32	0.62	665	34	0.67	732	36	0.88	795	37	0.88
2600	547	34	0.63	621	35	0.72	688	37	0.75	753	39	1.00	814	41	0.97
2800	575	37	0.74	646	39	0.82	710	41	0.85	773	43	1.12	832	45	1.08
3000	602	40	0.87	671	42	0.95	733	44	0.96	794	46	1.26	851	48	1.19
3200	630	44	1.02	696	46	1.09	756	48	1.08	815	50	1.43	869	52	1.31
3400	658	47	1.20	721	49	1.25	778	51	1.21	836	54	1.61	888	56	1.45
3600	686	51	1.41	746	53	1.44	801	55	1.37	856	57	1.81	906	59	1.60
3800	714	54	1.65	771	56	1.66	823	58	1.54	877	61	2.04	925	63	1.77
4000	741	58	1.94	797	60	1.91	846	62	1.74	898	64	2.30	943	67	1.96
4200	769	61	2.27	822	63	2.19	869	65	1.96	918	68	2.60	962	70	2.17

CFM	1.2			1.4			1.6			1.8			2.0		
	RPM	DDC %	BHP	RPM	DDC %	BHP	RPM	DDC %	BHP	RPM	DDC %	BHP	RPM	DDC %	BHP
1600	787	25	0.76	830	28	0.92	908	31	1.24	950	33	1.27	978	36	1.59
1800	804	28	0.84	847	32	1.00	922	35	1.35	964	37	1.35	993	39	1.69
2000	820	32	0.93	864	35	1.08	936	38	1.46	978	40	1.43	1009	42	1.79
2200	837	36	1.02	881	39	1.17	950	42	1.58	992	44	1.52	1024	46	1.90
2400	854	40	1.13	898	42	1.27	964	45	1.71	1006	47	1.62	1039	49	2.02
2600	870	43	1.25	915	46	1.37	977	48	1.85	1020	51	1.72	1054	53	2.15
2800	887	47	1.38	932	49	1.49	991	52	2.01	1033	54	1.82	1069	56	2.28
3000	904	51	1.53	949	53	1.61	1005	55	2.17	1047	58	1.93	1084	60	2.42
3200	920	54	1.69	966	56	1.74	1019	59	2.36	1061	61	2.05	1099	63	2.57
3400	937	58	1.87	983	60	1.89	1033	62	2.55	1075	65	2.18	1115	67	2.73
3600	954	62	2.06	1000	63	2.05	1047	66	2.76	1089	68	2.32	1130	70	2.90
3800	971	65	2.28	1017	67	2.22	1060	69	2.99	1103	71	2.46	1145	74	3.08
4000	987	69	2.52	1034	70	2.40	1074	73	3.24	1116	75	2.61	1160	77	3.27
4200	1004	73	2.78	1051	74	2.60	1088	76	3.51	1130	78	2.77	1175	80	3.47

Shaded area indicates air flow below 2550 SCFM (300 SCFM/ton) that is not recommended for High Stage cooling or heating.
Valid motor operating range for DDC% setting is 20 - 90.

10 Ton Models: DRG1203D, DRG1204D & DRG1207D with DDC Controls • Standard Static to 2.4 HP (0.2 ~ 0.8 ESP) • Down Flow

CFM	0.2			0.4			0.6			0.8			1.0		
	RPM	DDC %	BHP	RPM	DDC %	BHP	RPM	DDC %	BHP	RPM	DDC %	BHP	RPM	DDC %	BHP
2000				582	20	0.55	644	20	0.65	712	21	0.81	-	-	-
2200	533	21	0.43	610	24	0.62	671	25	0.73	737	26	0.91	-	-	-
2400	563	25	0.49	638	28	0.70	699	29	0.82	763	30	1.03	-	-	-
2600	593	29	0.55	666	32	0.79	726	33	0.93	789	35	1.16	-	-	-
2800	622	32	0.62	694	36	0.89	754	37	1.05	814	39	1.31	-	-	-
3000	652	36	0.70	723	40	1.00	781	42	1.18	840	44	1.47	-	-	-
3200	681	40	0.79	751	44	1.13	809	46	1.33	866	48	1.66	-	-	-
3400	711	44	0.89	779	48	1.27	836	50	1.50	891	52	1.87	-	-	-
3600	740	48	1.00	807	52	1.43	864	54	1.69	917	57	2.11	-	-	-
3800	770	52	1.13	835	56	1.61	891	59	1.90	943	61	2.38	-	-	-
4000	800	56	1.27	863	60	1.82	919	63	2.15				-	-	-
4200	829	60	1.44	892	64	2.05							-	-	-

Shaded area indicates air flow below 3000 SCFM (300 SCFM/ton) that is not recommended for High Stage cooling or heating.
Valid motor operating range for DDC% setting is 20 - 90.

HORIZONTAL FLOW

CFM	0.2			0.4			0.6			0.8			1.0		
	RPM	DDC %	BHP	RPM	DDC %	BHP	RPM	DDC %	BHP	RPM	DDC %	BHP	RPM	DDC %	BHP
2000							607	20	0.60	22	685	0.64	-	-	-
2200	473	19	0.42	552	21	0.48	628	24	0.68	26	704	0.71	-	-	-
2400	499	23	0.49	576	25	0.54	650	28	0.77	30	723	0.78	-	-	-
2600	525	27	0.56	600	29	0.61	671	32	0.86	34	742	0.87	-	-	-
2800	551	31	0.65	623	33	0.69	693	35	0.97	38	762	0.96	-	-	-
3000	578	35	0.74	647	37	0.77	714	39	1.10	42	781	1.06	-	-	-
3200	604	39	0.85	671	41	0.87	736	43	1.24	46	800	1.17	-	-	-
3400	630	43	0.98	695	45	0.98	757	47	1.40	50	819	1.29	-	-	-
3600	656	47	1.13	719	49	1.11	779	51	1.57	54	839	1.43	-	-	-
3800	682	51	1.30	743	53	1.25	800	55	1.78	58	858	1.58	-	-	-
4000	708	55	1.49	767	57	1.41	822	59	2.00	62	877	1.75	-	-	-
4200	734	59	1.72	791	61	1.59	843	63	2.26	66	896	1.93	-	-	-

Shaded area indicates air flow below 3000 SCFM (300 SCFM/ton) that is not recommended for High Stage cooling or heating.
Valid motor operating range for DDC% setting is 20 - 90.

10 Ton Models: DRG1203L, DRG1204L & DRG1207L with DDC Controls • Medium Static to 3.5 HP (0.2 ~ 1.4 ESP) • Down Flow

CFM	0.2			0.4			0.6			0.8			1.0		
	RPM	DDC %	BHP	RPM	DDC %	BHP	RPM	DDC %	BHP	RPM	DDC %	BHP	RPM	DDC %	BHP
1800													765	21	0.87
2000	504	17	0.38	582	20	0.55	644	20	0.65	712	21	0.81	788	25	0.97
2200	533	21	0.43	610	24	0.62	671	25	0.73	737	26	0.91	810	30	1.07
2400	563	25	0.49	638	28	0.70	699	29	0.82	763	30	1.03	833	34	1.18
2600	593	29	0.55	666	32	0.79	726	33	0.93	789	35	1.16	856	38	1.30
2800	622	32	0.62	694	36	0.89	754	37	1.05	814	39	1.31	878	42	1.44
3000	652	36	0.70	723	40	1.00	781	42	1.18	840	44	1.47	901	47	1.59
3200	681	40	0.79	751	44	1.13	809	46	1.33	866	48	1.66	923	51	1.76
3400	711	44	0.89	779	48	1.27	836	50	1.50	891	52	1.87	946	55	1.95
3600	740	48	1.00	807	52	1.43	864	54	1.69	917	57	2.11	969	59	2.15
3800	770	52	1.13	835	56	1.61	891	59	1.90	943	61	2.38	991	64	2.38
4000	800	56	1.27	863	60	1.82	919	63	2.15	968	66	2.68	1014	68	2.63
4200	829	60	1.44	892	64	2.05	946	67	2.42	994	70	3.02	1037	72	2.90
4400	859	64	1.62	920	68	2.31	974	72	2.73	1020	75	3.41	1059	77	3.21
4600	888	68	1.82	948	72	2.61	1001	76	3.08	1045					
4800	918	71	2.06	976	76	2.94	1029	80	3.47	1071					
5000	947	75	2.32	1004	80	3.32									

CFM	1.2			1.4			1.6			1.8			2.0		
	RPM	DDC %	BHP	RPM	DDC %	BHP	RPM	DDC %	BHP	RPM	DDC %	BHP	RPM	DDC %	BHP
1800	867	27	1.00	887	31	1.26	-	-	-	-	-	-	-	-	-
2000	885	31	1.09	906	35	1.37	-	-	-	-	-	-	-	-	-
2200	903	35	1.18	926	38	1.48	-	-	-	-	-	-	-	-	-
2400	921	39	1.28	945	42	1.61	-	-	-	-	-	-	-	-	-
2600	939	43	1.38	965	46	1.74	-	-	-	-	-	-	-	-	-
2800	956	47	1.50	985	50	1.89	-	-	-	-	-	-	-	-	-
3000	974	51	1.62	1004	54	2.04	-	-	-	-	-	-	-	-	-
3200	992	55	1.76	1024	58	2.21	-	-	-	-	-	-	-	-	-
3400	1010	59	1.90	1044	62	2.40	-	-	-	-	-	-	-	-	-
3600	1028	63	2.06	1063	66	2.60	-	-	-	-	-	-	-	-	-
3800	1046	67	2.23	1083	70	2.81	-	-	-	-	-	-	-	-	-
4000	1064	71	2.42	1103	73	3.05	-	-	-	-	-	-	-	-	-
4200	1082	75	2.62	1122	77	3.30	-	-	-	-	-	-	-	-	-
4400	1099	79	2.84				-	-	-	-	-	-	-	-	-
4600	1117	83	3.08				-	-	-	-	-	-	-	-	-
4800	1135	87	3.33				-	-	-	-	-	-	-	-	-
5000							-	-	-	-	-	-	-	-	-

Shaded area indicates air flow below 3000 SCFM (300 SCFM/ton) that is not recommended for High Stage cooling or heating.
Valid motor operating range for DDC% setting is 20 - 90.

HORIZONTAL FLOW

CFM	0.2			0.4			0.6			0.8			1.0		
	RPM	DDC %	BHP	RPM	DDC %	BHP	RPM	DDC %	BHP	RPM	DDC %	BHP	RPM	DDC %	BHP
1800										666	18	0.58	740	21	0.85
2000	447	15	0.37	528	17	0.42	20	20	0.60	685	22	0.64	758	25	0.94
2200	473	19	0.42	552	21	0.48	24	24	0.68	704	26	0.71	775	29	1.04
2400	499	23	0.49	576	25	0.54	28	28	0.77	723	30	0.78	792	33	1.15
2600	525	27	0.56	600	29	0.61	32	32	0.86	742	34	0.87	809	37	1.27
2800	551	31	0.65	623	33	0.69	35	35	0.97	762	38	0.96	827	41	1.41
3000	578	35	0.74	647	37	0.77	39	39	1.10	781	42	1.06	844	45	1.56
3200	604	39	0.85	671	41	0.87	43	43	1.24	800	46	1.17	861	49	1.72
3400	630	43	0.98	695	45	0.98	47	47	1.40	819	50	1.29	879	53	1.90
3600	656	47	1.13	719	49	1.11	51	51	1.57	839	54	1.43	896	56	2.10
3800	682	51	1.30	743	53	1.25	55	55	1.78	858	58	1.58	913	60	2.32
4000	708	55	1.49	767	57	1.41	59	59	2.00	877	62	1.75	931	64	2.56
4200	734	59	1.72	791	61	1.59	63	63	2.26	896	66	1.93	948	68	2.83
4400	760	63	1.98	814	65	1.79	67	67	2.54	916	70	2.13	965	72	3.13
4600	786	67	2.28	838	69	2.02	71	71	2.87	935	74	2.36	982	76	3.46
4800	812	71	2.62	862	73	2.28	75	75	3.24	954	78	2.60			
5000	838	75	3.01	886	77	2.57									

CFM	1.2			1.4			1.6			1.8			2.0		
	RPM	DDC %	BHP	RPM	DDC %	BHP	RPM	DDC %	BHP	RPM	DDC %	BHP	RPM	DDC %	BHP
1800	810	24	0.95	848	28	1.29	-	-	-	-	-	-	-	-	-
2000	825	28	1.02	863	32	1.40	-	-	-	-	-	-	-	-	-
2200	841	32	1.11	879	36	1.51	-	-	-	-	-	-	-	-	-
2400	856	36	1.20	895	40	1.64	-	-	-	-	-	-	-	-	-
2600	871	39	1.30	910	43	1.77	-	-	-	-	-	-	-	-	-
2800	886	43	1.41	926	47	1.92	-	-	-	-	-	-	-	-	-
3000	902	47	1.53	942	51	2.08	-	-	-	-	-	-	-	-	-
3200	917	51	1.66	957	55	2.26	-	-	-	-	-	-	-	-	-
3400	932	55	1.79	973	58	2.44	-	-	-	-	-	-	-	-	-
3600	948	59	1.94	989	62	2.65	-	-	-	-	-	-	-	-	-
3800	963	63	2.11	1004	66	2.87	-	-	-	-	-	-	-	-	-
4000	978	67	2.28	1020	70	3.11	-	-	-	-	-	-	-	-	-
4200	994	71	2.47	1036	74	3.37	-	-	-	-	-	-	-	-	-
4400	1009	75	2.68				-	-	-	-	-	-	-	-	-
4600	1024	78	2.90				-	-	-	-	-	-	-	-	-
4800							-	-	-	-	-	-	-	-	-
5000							-	-	-	-	-	-	-	-	-

Shaded area indicates air flow below 3000 SCFM (300 SCFM/ton) that is not recommended for High Stage cooling or heating.
Valid motor operating range for DDC% setting is 20 - 90.

10 Ton Models: DRG1203W, DRG1204W & DRG1207W with DDC Controls • High Static to 5.0 HP (0.2 ~ 2.0 ESP) • Down Flow

CFM	0.2			0.4			0.6			0.8			1.0		
	RPM	DDC %	BHP	RPM	DDC %	BHP	RPM	DDC %	BHP	RPM	DDC %	BHP	RPM	DDC %	BHP
1800															
2000	492	20	0.40	538	9	0.48	629	14	0.68	713	17	0.80	772	21	0.79
2200	522	23	0.46	569	13	0.54	657	19	0.76	738	22	0.91	796	25	0.87
2400	552	27	0.53	600	18	0.61	684	23	0.86	763	26	1.02	820	29	0.96
2600	583	30	0.61	631	22	0.69	712	27	0.97	787	30	1.15	844	34	1.06
2800	613	33	0.71	662	27	0.78	740	32	1.10	812	35	1.30	867	38	1.18
3000	643	37	0.81	693	32	0.87	768	36	1.23	837	39	1.47	891	42	1.30
3200	673	40	0.93	724	36	0.99	796	40	1.39	862	43	1.65	915	46	1.44
3400	704	44	1.07	755	41	1.11	823	45	1.57	886	48	1.86	938	51	1.59
3600	734	47	1.24	786	45	1.25	851	49	1.77	911	52	2.10	962	55	1.76
3800	764	51	1.42	817	50	1.41	879	53	2.00	936	56	2.37	986	59	1.94
4000	794	54	1.63	847	55	1.59	907	58	2.25	961	61	2.67	1009	63	2.14
4200	825	57	1.88	878	59	1.80	935	62	2.54	985	65	3.01	1033	68	2.37
4400	855	61	2.16	909	64	2.03	962	66	2.86	1010	69	3.40	1057	72	2.62
4600	885	64	2.49	940	68	2.28	990	71	3.22	1035	74	3.83	1080	76	2.89
4800	915	68	2.86	971	73	2.58	1018	75	3.64	1060	78	4.32	1104	80	3.20
5000	945	71	3.29	1002	78	2.90	1046	80	4.10	1084	82	4.87	1128	85	3.54
CFM	1.2			1.4			1.6			1.8			2.0		
	RPM	DDC %	BHP	RPM	DDC %	BHP	RPM	DDC %	BHP	RPM	DDC %	BHP	RPM	DDC %	BHP
1800	855	24	1.04	947	29	1.15	962	28	1.16	985	31	1.21	1056	33	1.42
2000	874	28	1.14	961	33	1.25	978	32	1.26	1003	34	1.31	1071	37	1.54
2200	892	32	1.26	976	37	1.35	995	36	1.36	1021	38	1.42	1085	41	1.66
2400	911	35	1.40	991	40	1.47	1012	40	1.47	1038	42	1.54	1100	45	1.80
2600	930	39	1.54	1006	44	1.59	1028	44	1.60	1056	46	1.67	1115	49	1.95
2800	949	43	1.71	1020	48	1.72	1045	48	1.73	1074	50	1.81	1130	52	2.12
3000	968	47	1.89	1035	51	1.86	1061	52	1.87	1092	54	1.96	1145	56	2.29
3200	987	51	2.09	1050	55	2.02	1078	56	2.03	1109	58	2.12	1160	60	2.48
3400	1005	55	2.30	1064	58	2.19	1095	60	2.20	1127	62	2.30	1175	64	2.69
3600	1024	59	2.55	1079	62	2.37	1111	63	2.38	1145	66	2.49	1190	68	2.91
3800	1043	63	2.81	1094	66	2.57	1128	67	2.58	1163	70	2.69	1205	72	3.16
4000	1062	67	3.11	1109	69	2.78	1145	71	2.79	1180	73	2.92	1220	75	3.42
4200	1081	70	3.44	1123	73	3.01	1161	75	3.03	1198	77	3.16	1235	79	3.70
4400	1100	74	3.80	1138	77	3.26	1178	79	3.28	1216	81	3.42	1250	83	4.01
4600	1118	78	4.20	1153	80	3.53	1194	83	3.55	1234	85	3.71	1264	87	4.35
4800	1137	82	4.64	1167	84	3.83	1211	87	3.85	1251	89	4.02	1279	91	4.71
5000	1156	86	5.13	1182	88	4.15	1228	91	4.17	1269	93	4.35			

Shaded area indicates air flow below 3000 SCFM (300 SCFM/ton) that is not recommended for High Stage cooling or heating.
Valid motor operating range for DDC% setting is 20 - 90.

HORIZONTAL FLOW

CFM	0.2			0.4			0.6			0.8			1.0		
	RPM	DDC %	BHP	RPM	DDC %	BHP	RPM	DDC %	BHP	RPM	DDC %	BHP	RPM	DDC %	BHP
1800										662	21	0.64	752	25	0.82
2000	445	18	0.33	509	17	0.50	606	21	0.55	681	24	0.70	769	28	0.91
2200	471	22	0.37	534	20	0.56	629	24	0.61	701	28	0.78	786	32	1.00
2400	497	25	0.42	560	24	0.63	651	28	0.67	721	32	0.86	804	35	1.11
2600	522	29	0.47	585	28	0.72	673	32	0.74	741	35	0.95	821	39	1.22
2800	548	32	0.53	610	32	0.81	695	36	0.82	761	39	1.05	838	42	1.35
3000	574	36	0.60	636	36	0.91	717	39	0.91	781	42	1.16	855	46	1.49
3200	600	39	0.68	661	40	1.03	739	43	1.00	801	46	1.28	873	49	1.65
3400	625	43	0.77	686	44	1.16	761	47	1.11	821	50	1.42	890	53	1.83
3600	651	47	0.86	712	47	1.30	783	51	1.23	841	53	1.56	907	56	2.02
3800	677	50	0.97	737	51	1.47	805	54	1.35	861	57	1.73	924	60	2.23
4000	703	54	1.10	762	55	1.66	827	58	1.50	881	60	1.91	941	63	2.46
4200	728	57	1.24	787	59	1.87	849	62	1.65	901	64	2.11	959	67	2.72
4400	754	61	1.40	813	63	2.11	871	66	1.83	921	68	2.33	976	70	3.01
4600	780	64	1.57	838	67	2.38	893	69	2.02	941	71	2.58	993	74	3.33
4800	806	68	1.77	863	70	2.68	916	73	2.23	961	75	2.85	1010	77	3.68
5000	831	72	2.00	889	74	3.02	938	77	2.47	981	78	3.15	1028	81	4.06

CFM	1.2			1.4			1.6			1.8			2.0		
	RPM	DDC %	BHP	RPM	DDC %	BHP	RPM	DDC %	BHP	RPM	DDC %	BHP	RPM	DDC %	BHP
1800	860	31	0.96	942	29	1.24	1012	33	1.45	1050	37	1.60	1105	40	1.63
2000	873	35	1.04	952	33	1.34	1021	37	1.58	1059	40	1.73	1111	43	1.73
2200	886	38	1.13	963	36	1.45	1030	40	1.71	1067	43	1.88	1116	46	1.84
2400	900	41	1.22	973	40	1.57	1039	43	1.85	1076	47	2.03	1122	50	1.95
2600	913	44	1.32	983	43	1.70	1049	47	2.00	1084	50	2.20	1127	53	2.07
2800	926	47	1.43	993	47	1.84	1058	50	2.17	1093	53	2.39	1133	56	2.20
3000	940	50	1.55	1003	50	2.00	1067	54	2.35	1101	56	2.59	1139	59	2.34
3200	953	54	1.68	1013	54	2.16	1076	57	2.55	1110	60	2.80	1144	62	2.48
3400	966	57	1.82	1023	57	2.34	1085	60	2.76	1118	63	3.03	1150	66	2.64
3600	980	60	1.98	1033	61	2.54	1094	64	2.99	1127	66	3.29	1155	69	2.80
3800	993	63	2.14	1043	64	2.75	1103	67	3.24	1135	69	3.56	1161	72	2.97
4000	1006	66	2.32	1053	68	2.98	1112	70	3.51	1144	73	3.86	1166	75	3.16
4200	1019	70	2.51	1063	71	3.23	1122	74	3.80	1152	76	4.18	1172	78	3.35
4400	1033	73	2.72	1073	75	3.49	1131	77	4.12	1161	79	4.53	1177	82	3.56
4600	1046	76	2.95	1083	78	3.79	1140	81	4.46	1169	83	4.90	1183	85	3.78
4800	1059	79	3.19	1094	82	4.10	1149	84	4.83	1178	86	5.31	1188	88	4.01
5000	1073	82	3.46	1104	85	4.44	1158	87	5.23	1186	89	5.76	1194	91	4.26

Shaded area indicates air flow below 3000 SCFM (300 SCFM/ton) that is not recommended for High Stage cooling or heating.
Valid motor operating range for DDC% setting is 20 - 90.

12.5 Ton Models: DRG1503D, DRG1504D & DRG1507D with DDC Controls • Standard Static to 3.5 HP (0.2 ~ 0.8 ESP) • Down Flow

CFM	0.2			0.4			0.6			0.8			1.0		
	RPM	DDC %	BHP	RPM	DDC %	BHP	RPM	DDC %	BHP	RPM	DDC %	BHP	RPM	DDC %	BHP
2000							601	20	0.62	677	22	0.67	-	-	-
2200	537	21	0.51	595	23	0.66	627	24	0.70	700	27	0.75	-	-	-
2400	561	25	0.58	620	27	0.75	653	28	0.79	724	31	0.85	-	-	-
2600	585	29	0.65	644	31	0.84	680	33	0.89	747	35	0.96	-	-	-
2800	610	33	0.74	668	35	0.95	706	37	1.00	770	39	1.08	-	-	-
3000	634	37	0.83	692	39	1.07	733	41	1.13	793	43	1.22	-	-	-
3200	658	41	0.93	717	43	1.21	759	45	1.28	817	47	1.37	-	-	-
3400	682	45	1.05	741	47	1.36	786	49	1.44	840	51	1.55	-	-	-
3600	707	49	1.19	765	52	1.54	812	54	1.62	863	56	1.74	-	-	-
3800	731	54	1.34	789	56	1.73	838	58	1.83	886	60	1.97	-	-	-
4000	755	58	1.51	814	60	1.96	865	62	2.06	909	64	2.22	-	-	-
4200	779	62	1.70	838	64	2.20	891	66	2.33	933	68	2.50	-	-	-
4400	804	66	1.92	862	68	2.49	918	70	2.62	956	72	2.82	-	-	-
4600	828	70	2.16	886	72	2.80	944	75	2.96	979	76	3.18	-	-	-

Shaded area indicates air flow below 3750 SCFM (300 SCFM/ton) that is not recommended for High Stage cooling or heating.
Valid motor operating range for DDC% setting is 20 - 90.

HORIZONTAL FLOW

CFM	0.2			0.4			0.6			0.8			1.0		
	RPM	DDC %	BHP	RPM	DDC %	BHP	RPM	DDC %	BHP	RPM	DDC %	BHP	RPM	DDC %	BHP
2000													-	-	-
2200										691	22	0.70	-	-	-
2400	520	23	0.57	577	18	0.62	653	24	0.66	713	26	0.77	-	-	-
2600	547	27	0.65	603	23	0.70	677	29	0.73	736	31	0.85	-	-	-
2800	574	31	0.73	630	28	0.79	700	33	0.81	759	35	0.94	-	-	-
3000	601	36	0.82	657	33	0.89	724	38	0.89	781	40	1.04	-	-	-
3200	629	40	0.93	683	38	1.00	748	42	0.99	804	45	1.15	-	-	-
3400	656	44	1.05	710	43	1.13	772	47	1.09	827	49	1.27	-	-	-
3600	683	48	1.18	736	48	1.27	796	51	1.21	849	54	1.41	-	-	-
3800	710	53	1.33	763	52	1.43	820	56	1.33	872	58	1.56	-	-	-
4000	737	57	1.50	789	57	1.62	844	60	1.47	895	63	1.72	-	-	-
4200	764	61	1.69	816	62	1.82	868	65	1.63	917	67	1.90	-	-	-
4400	791	66	1.91	842	67	2.06	892	70	1.80	940	72	2.10	-	-	-
4600	819	70	2.15	869	72	2.32	916	74	1.99	963	76	2.32	-	-	-
4800	846	74	2.42	896	77	2.61	940	79	2.20	985	81	2.57	-	-	-

Shaded area indicates air flow below 3750 SCFM (300 SCFM/ton) that is not recommended for High Stage cooling or heating.
Valid motor operating range for DDC% setting is 20 - 90.

12.5 Ton Models: DRG1503L, DRG1504L & DRG1507L with DDC Controls • Medium Static to 3.5 HP (0.2 ~ 1.4 ESP) • Down Flow

CFM	0.2			0.4			0.6			0.8			1.0		
	RPM	DDC %	BHP	RPM	DDC %	BHP	RPM	DDC %	BHP	RPM	DDC %	BHP	RPM	DDC %	BHP
2200	537	21	0.51	595	23	0.66	627	24	0.70	700	27	0.76	764	29	0.87
2400	561	25	0.58	620	27	0.75	653	28	0.79	724	31	0.84	785	33	0.96
2600	585	29	0.65	644	31	0.84	680	33	0.89	747	35	0.93	806	37	1.06
2800	610	33	0.74	668	35	0.95	706	37	1.00	770	39	1.03	827	41	1.18
3000	634	37	0.83	692	39	1.07	733	41	1.13	793	43	1.14	848	45	1.30
3200	658	41	0.93	717	43	1.21	759	45	1.28	817	47	1.26	869	49	1.44
3400	682	45	1.05	741	47	1.36	786	49	1.44	840	51	1.39	890	53	1.59
3600	707	49	1.19	765	52	1.54	812	54	1.62	863	56	1.54	911	58	1.76
3800	731	54	1.34	789	56	1.73	838	58	1.83	886	60	1.70	932	62	1.94
4000	755	58	1.51	814	60	1.96	865	62	2.06	909	64	1.88	953	66	2.14
4200	779	62	1.70	838	64	2.20	891	66	2.33	933	68	2.08	974	70	2.37
4400	804	66	1.92	862	68	2.49	918	70	2.62	956	72	2.30	995	74	2.62
4600	828	70	2.16	886	72	2.80	944	75	2.96	979	76	2.54	1016	78	2.89
4800	852	74	2.44	911	76	3.16	970	79	3.33	1002	80	2.80	1037	82	3.20
5000	876	78	2.75												

CFM	1.2			1.4			1.6			1.8			2.0		
	RPM	DDC %	BHP	RPM	DDC %	BHP	RPM	DDC %	BHP	RPM	DDC %	BHP	RPM	DDC %	BHP
2200	825	31	1.09	938	42	0.93	-	-	-	-	-	-	-	-	-
2400	844	35	1.20	949	45	1.20	-	-	-	-	-	-	-	-	-
2600	863	39	1.33	961	48	1.33	-	-	-	-	-	-	-	-	-
2800	883	43	1.47	972	51	1.47	-	-	-	-	-	-	-	-	-
3000	902	48	1.62	984	54	1.62	-	-	-	-	-	-	-	-	-
3200	921	52	1.79	996	57	1.79	-	-	-	-	-	-	-	-	-
3400	940	56	1.98	1007	60	1.98	-	-	-	-	-	-	-	-	-
3600	959	60	2.19	1019	63	2.19	-	-	-	-	-	-	-	-	-
3800	978	64	2.42	1030	66	2.42	-	-	-	-	-	-	-	-	-
4000	997	68	2.67	1042	69	2.67	-	-	-	-	-	-	-	-	-
4200	1016	72	2.96	1054	72	2.96	-	-	-	-	-	-	-	-	-
4400	1036	76	3.27	1065	75	3.27	-	-	-	-	-	-	-	-	-
4600							-	-	-	-	-	-	-	-	-
4800							-	-	-	-	-	-	-	-	-
5000							-	-	-	-	-	-	-	-	-

Shaded area indicates air flow below 3750 SCFM (300 SCFM/ton) that is not recommended for High Stage cooling or heating.
Valid motor operating range for DDC% setting is 20 - 90.

HORIZONTAL FLOW

CFM	0.2			0.4			0.6			0.8			1.0		
	RPM	DDC %	BHP	RPM	DDC %	BHP	RPM	DDC %	BHP	RPM	DDC %	BHP	RPM	DDC %	BHP
2200	493	18	0.51	550	13	0.55	629	19	0.60	691	22	0.70	750	23	0.83
2400	520	23	0.57	577	18	0.62	653	24	0.66	713	26	0.77	771	28	0.91
2600	547	27	0.65	603	23	0.70	677	29	0.73	736	31	0.85	793	32	1.01
2800	574	31	0.73	630	28	0.79	700	33	0.81	759	35	0.94	814	37	1.12
3000	601	36	0.82	657	33	0.89	724	38	0.89	781	40	1.04	835	42	1.23
3200	629	40	0.93	683	38	1.00	748	42	0.99	804	45	1.15	857	46	1.36
3400	656	44	1.05	710	43	1.13	772	47	1.09	827	49	1.27	878	51	1.51
3600	683	48	1.18	736	48	1.27	796	51	1.21	849	54	1.41	900	55	1.67
3800	710	53	1.33	763	52	1.43	820	56	1.33	872	58	1.56	921	60	1.84
4000	737	57	1.50	789	57	1.62	844	60	1.47	895	63	1.72	942	65	2.03
4200	764	61	1.69	816	62	1.82	868	65	1.63	917	67	1.90	964	69	2.25
4400	791	66	1.91	842	67	2.06	892	70	1.80	940	72	2.10	985	74	2.48
4600	819	70	2.15	869	72	2.32	916	74	1.99	963	76	2.32	1006	78	2.75
4800	846	74	2.42	896	77	2.61	940	79	2.20	985	81	2.57	1028	83	3.03
5000	873	79	2.73	922	82	2.95	964	83	2.43	1008	85	2.84	1049	87	3.35
CFM	**1.2**			**1.4**			**1.6**			**1.8**			**2.0**		
	RPM	DDC %	BHP	RPM	DDC %	BHP	RPM	DDC %	BHP	RPM	DDC %	BHP	RPM	DDC %	BHP
2200	804	28	1.06	862	27	1.24	-	-	-	-	-	-	-	-	-
2400	825	32	1.17	881	32	1.37	-	-	-	-	-	-	-	-	-
2600	845	36	1.29	900	37	1.52	-	-	-	-	-	-	-	-	-
2800	866	41	1.42	919	41	1.68	-	-	-	-	-	-	-	-	-
3000	887	45	1.57	938	46	1.85	-	-	-	-	-	-	-	-	-
3200	907	49	1.74	957	51	2.05	-	-	-	-	-	-	-	-	-
3400	928	54	1.92	976	55	2.26	-	-	-	-	-	-	-	-	-
3600	948	58	2.13	995	60	2.50	-	-	-	-	-	-	-	-	-
3800	969	62	2.35	1013	65	2.76	-	-	-	-	-	-	-	-	-
4000	989	66	2.60	1032	69	3.05	-	-	-	-	-	-	-	-	-
4200	1010	71	2.87	1051	74	3.38	-	-	-	-	-	-	-	-	-
4400	1030	75	3.17				-	-	-	-	-	-	-	-	-
4600	1051	79	3.50				-	-	-	-	-	-	-	-	-
4800							-	-	-	-	-	-	-	-	-
5000							-	-	-	-	-	-	-	-	-

Shaded area indicates air flow below 3750 SCFM (300 SCFM/ton) that is not recommended for High Stage cooling or heating.
Valid motor operating range for DDC% setting is 20 - 90.

12.5 Ton Models: DRG1503W, DRG1504W & DRG1507W with DDC Controls • High Static to 5.0 HP (0.2 ~ 2.0 ESP) • Down Flow

CFM	0.2			0.4			0.6			0.8			1.0		
	RPM	DDC %	BHP	RPM	DDC %	BHP	RPM	DDC %	BHP	RPM	DDC %	BHP	RPM	DDC %	BHP
2400	635	29	0.78	732	33	1.02	812	38	1.06	877	41	1.32	945	43	1.45
2600	667	33	0.89	758	37	1.14	835	41	1.18	898	44	1.46	964	46	1.58
2800	699	37	1.03	785	41	1.29	859	45	1.30	919	47	1.61	982	50	1.71
3000	731	41	1.18	811	44	1.45	882	48	1.44	939	51	1.78	1000	53	1.85
3200	763	45	1.36	838	48	1.64	906	52	1.59	960	54	1.97	1018	57	2.00
3400	795	49	1.56	864	52	1.85	929	55	1.75	980	57	2.18	1036	60	2.17
3600	827	53	1.80	891	55	2.09	953	59	1.94	1001	61	2.40	1055	64	2.35
3800	859	57	2.07	917	59	2.35	976	62	2.14	1021	64	2.66	1073	67	2.55
4000	891	61	2.38	944	62	2.65	1000	65	2.37	1042	67	2.94	1091	70	2.76
4200	923	64	2.74	970	66	2.99	1023	69	2.62	1063	71	3.25	1109	74	2.99
4400	955	68	3.15	997	70	3.37	1047	72	2.89	1083	74	3.59	1128	77	3.24
4600	987	72	3.62	1023	73	3.80	1070	76	3.20	1104	77	3.96	1146	81	3.51
4800	1019	76	4.16	1050	77	4.28	1094	79	3.53	1124	81	4.38	1164	84	3.80
5000	1051	80	4.79	1076	81	4.83	1117	83	3.91	1145	84	4.84	1182	88	4.12

CFM	1.2			1.4			1.6			1.8			2.0		
	RPM	DDC %	BHP	RPM	DDC %	BHP	RPM	DDC %	BHP	RPM	DDC %	BHP	RPM	DDC %	BHP
2400	1010	47	1.84	1065	50	2.10	1102	52	2.13	1159	55	2.30	1193	56	2.70
2600	1027	51	1.99	1081	53	2.28	1121	55	2.31	1179	58	2.49	1213	60	2.93
2800	1044	54	2.16	1097	56	2.47	1139	59	2.51	1199	62	2.70	1233	63	3.17
3000	1061	57	2.34	1112	59	2.68	1158	62	2.71	1219	65	2.93	1252	66	3.43
3200	1077	60	2.53	1128	62	2.90	1176	65	2.94	1240	68	3.17	1272	70	3.72
3400	1094	63	2.74	1144	65	3.14	1195	68	3.18	1260	72	3.44	1291	73	4.03
3600	1111	66	2.97	1159	69	3.40	1213	72	3.45	1280	75	3.72	1311	76	4.37
3800	1128	70	3.22	1175	72	3.68	1232	75	3.74	1300	78	4.03	1331	80	4.73
4000	1145	73	3.49	1191	75	3.99	1250	78	4.05	1321	82	4.37	1350	83	5.12
4200	1161	76	3.78	1206	78	4.32	1269	81	4.39	1341	85	4.73			
4400	1178	79	4.09	1222	81	4.68	1288	85	4.75	1361	89	5.12			
4600	1195	82	4.43	1238	84	5.07									
4800	1212	85	4.80												
5000															

Shaded area indicates air flow below 3750 SCFM (300 SCFM/ton) that is not recommended for High Stage cooling or heating.
Valid motor operating range for DDC% setting is 20 - 90.

HORIZONTAL FLOW

CFM	0.2			0.4			0.6			0.8			1.0		
	RPM	DDC %	BHP	RPM	DDC %	BHP	RPM	DDC %	BHP	RPM	DDC %	BHP	RPM	DDC %	BHP
2400	509	23	0.44	590	24	0.66	674	27	0.86	767	32	0.98	838	28	0.95
2600	534	26	0.49	613	28	0.74	694	31	0.97	782	36	1.08	851	32	1.03
2800	560	30	0.56	635	32	0.83	714	35	1.10	797	39	1.19	865	36	1.12
3000	586	34	0.63	657	36	0.94	734	39	1.23	811	42	1.32	878	40	1.21
3200	612	38	0.71	680	40	1.06	754	42	1.39	826	46	1.46	891	44	1.31
3400	638	42	0.80	702	44	1.19	774	46	1.57	841	49	1.61	904	48	1.42
3600	664	46	0.90	724	48	1.35	793	50	1.77	856	53	1.78	918	52	1.54
3800	690	50	1.01	747	51	1.52	813	54	2.00	870	56	1.97	931	57	1.67
4000	716	53	1.14	769	55	1.71	833	57	2.25	885	60	2.18	944	61	1.80
4200	742	57	1.29	792	59	1.93	853	61	2.54	900	63	2.40	957	65	1.95
4400	768	61	1.45	814	63	2.18	873	65	2.86	915	67	2.66	971	69	2.12
4600	793	65	1.64	836	67	2.45	893	68	3.22	930	70	2.94	984	73	2.29
4800	819	69	1.85	859	71	2.77	913	72	3.64	944	74	3.25	997	77	2.48
5000	845	73	2.08	881	75	3.12	932	76	4.10	959	77	3.59	1010	81	2.69
5200	871	76	2.35	903	78	3.52	952	80	4.62	974	81	3.96	1024	85	2.92
5400	897	80	2.65	926	82	3.97	972	83	5.21	989	84	4.38	1037	89	3.16
5600	923	84	2.99	948	86	4.47	992	87	5.88	1003	87	4.84	1050	93	3.42
CFM	**1.2**			**1.4**			**1.6**			**1.8**			**2.0**		
	RPM	DDC %	BHP	RPM	DDC %	BHP	RPM	DDC %	BHP	RPM	DDC %	BHP	RPM	DDC %	BHP
2400	908	38	1.20	979	42	1.45	1053	43	1.59	1114	38	1.86	1134	47	1.87
2600	919	42	1.30	988	45	1.57	1059	47	1.69	1119	42	1.97	1139	50	1.98
2800	929	45	1.41	997	48	1.70	1064	50	1.79	1123	45	2.09	1144	54	2.11
3000	940	48	1.53	1007	51	1.85	1070	53	1.90	1127	48	2.22	1150	57	2.24
3200	951	51	1.66	1016	54	2.00	1075	56	2.02	1131	51	2.36	1155	60	2.37
3400	961	54	1.79	1025	57	2.17	1081	60	2.14	1135	54	2.51	1161	64	2.52
3600	972	58	1.94	1035	61	2.35	1086	63	2.28	1139	57	2.66	1166	67	2.68
3800	983	61	2.11	1044	64	2.54	1092	66	2.42	1143	61	2.83	1172	70	2.84
4000	993	64	2.28	1053	67	2.75	1097	70	2.57	1148	64	3.00	1177	73	3.02
4200	1004	67	2.47	1063	70	2.98	1103	73	2.73	1152	67	3.19	1183	77	3.20
4400	1014	71	2.68	1072	73	3.23	1108	76	2.89	1156	70	3.38	1188	80	3.40
4600	1025	74	2.90	1081	77	3.50	1114	79	3.07	1160	73	3.59	1194	83	3.61
4800	1036	77	3.14	1091	80	3.79	1119	83	3.26	1164	77	3.81	1199	86	3.84
5000	1046	80	3.40	1100	83	4.11	1125	86	3.46	1168	80	4.05	1205	90	4.07
5200	1057	83	3.69	1109	86	4.45	1130	89	3.68	1172	83	4.30	1210	93	4.32
5400	1068	87	3.99	1119	89	4.82	1136	92	3.91	1177	86	4.57	1215	96	4.59
5600	1078	90	4.33	1128	92	5.22	1141	96	4.15	1181	89	4.85	1221	99	4.88

Shaded area indicates air flow below 3750 SCFM (300 SCFM/ton) that is not recommended for High Stage cooling or heating.
Valid motor operating range for DDC% setting is 20 - 90.

7.5-12.5 TONS		
DOWNFLOW ECONOMIZER PRESSURE DROP		
Cabinet	CFM	SP in.wg.
7.5 Ton	2250	.04"
	3000	.07"
	3750	.11"
8.5 Ton	2550	.06"
	3400	.10"
	4250	.16"
10 Ton	3000	.08"
	4000	.13"
	5000	.22"
12.5 Ton	3750	.14"
	5000	.24"
	6250	.36"

7.5-12.5 TONS		
HORIZONTAL ECONOMIZER PRESSURE DROP		
Cabinet	CFM	SP in.wg.
7.5 Ton	2250	.05"
	3000	.07"
	3750	.13"
8.5 Ton	2550	.07"
	3400	.13"
	4250	.18"
10 Ton	3000	.07"
	4000	.12"
	5000	.19"
12.5 Ton	3750	.09"
	5000	.15"
	6250	.24"

DRG 090 (7.5 Tons) With iLINQ Control In Modulating Hot Gas Reheat Mode-High Stage

EAT (DB °F)			75			75			75			75		
EAT (WB °F)			62			64			68			71		
Ambient Temperature (DB °F)		SCFM	2000	3000	3375	2000	3000	3375	2000	3000	3375	2000	3000	3375
95	TC	Btu/h	41,100	46,100	46,100	45,700	50,700	52,500	63,569	72,802	77,118	83,202	95,162	108,031
	S/T	-	0.63	0.79	0.85	0.51	0.66	0.70	0.35	0.39	0.41	0.30	0.30	0.29
	CMPR	kW	5.5	5.5	5.5	5.5	5.6	5.6	5.6	5.6	5.7	5.8	5.9	5.9
	LDB	°F	63.23	63.96	64.45	64.41	64.86	65.1	64.89	66.40	66.48	63.65	66.35	66.56
	LWB	°F	55.59	57.4	57.99	56.53	58.57	59.02	58.30	60.8	61.22	58.83	62.0	61.94
80	TC	Btu/h	46,800	51,800	51,600	51,400	56,400	58,000	66,989	76,038	78,230	84,256	99,845	102,545
	S/T	-	0.61	0.75	0.81	0.51	0.64	0.68	0.39	0.49	0.44	0.35	0.43	0.40
	CMPR	kW	4.7	4.7	4.7	4.7	4.7	4.7	4.7	4.7	4.7	4.7	4.8	4.9
	LDB	°F	62.02	63.23	63.74	63.08	64.06	64.38	63.12	63.71	65.73	61.60	61.99	63.95
	LWB	°F	54.55	56.74	57.43	55.51	57.92	58.47	57.70	60.40	61.11	58.63	61.50	62.41
75	TC	Btu/h	48,700	53,700	53,500	53,300	58,300	59,900	67,929	75,964	78,697	82,566	93,345	99,496
	S/T	-	0.61	0.74	0.80	0.51	0.64	0.67	0.37	0.45	0.45	0.35	0.44	0.42
	CMPR	kW	4.6	4.6	4.6	4.6	4.6	4.6	4.6	4.6	4.6	4.6	4.6	4.7
	LDB	°F	61.5	62.96	63.47	62.64	63.69	64.19	63.6	64.64	65.46	61.9	62.55	63.74
	LWB	°F	54.2	56.52	57.23	55.17	57.7	58.28	57.55	60.42	61.07	58.92	62.18	62.69
70	TC	Btu/h	50,600	55,600	55,300	55,200	60,200	61,700	69,124	76,655	79,899	82,052	90,760	100,132
	S/T	-	0.60	0.73	0.79	0.51	0.63	0.67	0.39	0.50	0.46	0.35	0.47	0.42
	CMPR	kW	4.5	4.5	4.5	4.5	4.5	4.5	4.5	4.5	4.5	4.5	4.6	4.6
	LDB	°F	61.20	62.70	63.23	62.20	63.51	63.86	62.75	63.39	65.10	61.95	62.07	63.67
	LWB	°F	53.84	56.29	57.05	54.82	57.49	58.10	57.33	60.33	60.95	59.00	62.44	62.63
65	TC	Btu/h	52,497	57,497	57,185	57,112	62,112	63,550	70,734	78,681	82,121	83,691	96,543	104,200
	S/T	-	0.60	0.72	0.78	0.50	0.63	0.66	0.39	0.47	0.44	0.37	0.45	0.40
	CMPR	kW	4.3	4.3	4.3	4.3	4.3	4.3	4.3	4.4	4.4	4.3	4.5	4.7
	LDB	°F	60.68	62.46	62.99	62.02	63.14	63.70	62.46	63.79	65.27	60.92	61.84	63.77
	LWB	°F	53.49	56.07	56.85	54.48	57.27	57.91	57.05	60.12	60.74	58.72	61.84	62.26

DRG 090 (7.5 Tons) With iLINQ Control In Modulating Hot Gas Reheat Mode-Low Stage

EAT (DB °F)			75			75			75			75		
EAT (WB °F)			62			64			68			71		
Ambient Temperature (DB °F)		SCFM	2000	3000	3375	2000	3000	3375	2000	3000	3375	2000	3000	3375
60	TC	Btu/h	6,600	7,900	7,600	6,500	7,800	6,500	7,832	10,061	7,204	9,463	13,294	9,510
	S/T	-	0.62	0.78	0.79	0.30	0.51	0.45	0.008	0.157	0.033	0.003	0.035	0.008
	CMPR	kW	2.1	2.1	2.1	2.2	2.1	2.1	2.2	2.1	2.1	2.2	2.1	2.1
	LDB	°F	73.14	73.13	73.38	74.11	73.79	74.21	74.96	74.51	74.94	75.00	74.88	74.97
	LWB	°F	61.45	61.66	61.79	63.01	63.21	63.42	66.92	67.07	67.42	69.78	69.86	70.28
50	TC	Btu/h	9,100	10,300	10,700	9,000	10,300	9,600	10,500	12,661	11,905	11,916	15,671	13,463
	S/T	-	0.62	0.75	0.75	0.39	0.54	0.52	0.126	0.210	0.162	0.057	0.065	0.041
	CMPR	kW	2.1	2.0	2.1	2.1	2.1	2.1	2.1	2.1	2.1	2.1	2.1	2.1
	LDB	°F	72.44	72.66	72.84	73.4	73.31	73.66	74.38	74.19	74.49	74.68	74.67	74.85
	LWB	°F	61.05	61.41	61.49	62.62	62.95	63.13	66.54	66.8	67.03	69.46	69.7	69.98
40	TC	Btu/h	11,500	12,800	13,900	11,500	12,700	12,800	13,049	15,101	15,016	14,063	17,368	16,919
	S/T	-	0.63	0.73	0.73	0.44	0.56	0.55	0.20	0.249	0.219	0.091	0.079	0.049
	CMPR	kW	2.1	2.0	2.0	2.1	2.0	2.0	2.1	2.0	2.0	2.1	2.1	2.0
	LDB	°F	71.71	72.17	72.27	72.7	72.84	73.1	73.81	73.86	74.11	74.42	74.58	74.77
	LWB	°F	60.66	61.14	61.19	62.23	62.7	62.84	66.18	66.60	66.76	69.17	69.50	69.71

TC: Total Capacity (Btu/h); S/T: Sensible to Total Capacity Ratio; CMPR: Compressor Power (kW); LDB: Leaving Dry Bulb Temperature (°F); LWB: Leaving Wet Bulb Temperature (°F)

DRG 102 (8.5 Tons) With iLINQ Control In Modulating Hot Gas Reheat Mode-High Stage

EAT (DB °F)			75			75			75			75		
EAT (WB °F)			62			64			68			71		
Ambient Temperature (DB °F)		SCFM	2000	3000	4000	2000	3000	4000	2000	3000	4000	2000	3000	4000
95	TC	Btu/h	31,200	31,100	33,000	37,200	39,300	40,400	54,170	61,639	62,269	70,900	80,570	87,230
	S/T	-	0.48	0.81	0.96	0.34	0.59	0.71	0.21	0.31	0.38	0.18	0.24	0.28
	CMPR	kW	6.1	6.2	6.2	6.1	6.2	6.2	6.2	6.2	6.2	6.4	6.4	6.5
	LDB	°F	68.19	67.37	67.80	69.25	67.97	68.48	69.83	69.21	69.62	69.20	69.14	69.45
	LWB	°F	57.36	59.12	59.82	58.04	59.85	60.83	59.90	61.97	63.50	60.88	63.54	65.03
80	TC	Btu/h	46,600	49,200	53,800	52,600	57,400	61,200	69,822	81,182	83,231	87,820	106,600	109,100
	S/T	-	0.49	0.67	0.79	0.39	0.54	0.64	0.29	0.39	0.41	0.26	0.35	0.37
	CMPR	kW	5.2	5.2	5.2	5.2	5.2	5.2	5.2	5.2	5.2	5.2	5.3	5.4
	LDB	°F	64.62	65.01	65.34	65.68	65.61	66.1	65.80	65.4	67.2	64.62	63.7	65.8
	LWB	°F	54.61	57.06	58.07	55.32	57.82	59.11	57.24	59.86	61.87	58.06	60.80	63.38
75	TC	Btu/h	51,700	55,300	60,700	57,700	63,500	68,100	74,538	86,019	89,695	90,600	105,700	113,400
	S/T	-	0.49	0.65	0.75	0.40	0.53	0.63	0.29	0.36	0.42	0.27	0.35	0.39
	CMPR	kW	5.0	5.0	5.0	5.0	5.0	5.0	5.0	5.0	5.0	5.0	5.1	5.1
	LDB	°F	63.49	64.11	64.65	64.51	64.8	65.25	65.17	65.62	66.44	63.88	63.79	64.95
	LWB	°F	53.66	56.34	57.48	54.39	57.12	58.53	56.42	59.34	61.36	57.58	60.90	63.04
70	TC	Btu/h	56,900	61,300	67,600	62,800	69,500	75,000	79,409	91,469	96,789	94,260	108,300	121,300
	S/T	-	0.49	0.63	0.73	0.41	0.52	0.62	0.32	0.40	0.42	0.29	0.38	0.39
	CMPR	kW	4.8	4.8	4.8	4.8	4.8	4.8	4.8	4.8	4.9	4.8	4.9	4.9
	LDB	°F	62.33	63.30	63.78	63.30	64.05	64.43	63.45	63.91	65.76	62.57	62.53	64.25
	LWB	°F	52.68	55.63	56.87	53.44	56.42	57.94	55.54	58.72	60.79	56.94	60.61	62.44
65	TC	Btu/h	61,991	67,390	74,566	67,973	75,583	81,951	84,676	98,402	105,050	100,186	119,373	135,857
	S/T	-	0.49	0.61	0.71	0.42	0.51	0.61	0.33	0.38	0.40	0.31	0.36	0.37
	CMPR	kW	4.6	4.6	4.6	4.6	4.6	4.6	4.6	4.6	4.6	4.5	4.8	5.0
	LDB	°F	61.19	62.54	62.97	62.02	63.32	63.64	62.30	63.67	65.45	60.88	61.98	63.58
	LWB	°F	51.69	54.89	56.26	52.45	55.70	57.34	54.58	57.94	60.12	55.89	59.41	61.30

DRG 102 (8.5 Tons) With iLINQ Control In Modulating Hot Gas Reheat Mode-Low Stage

EAT (DB °F)			75			75			75			75		
EAT (WB °F)			62			64			68			71		
Ambient Temperature (DB °F)		SCFM	2000	3000	4000	2000	3000	4000	2000	3000	4000	2000	3000	4000
60	TC	Btu/h	21,600	15,000	7,900	24,800	18,300	10,800	33,353	27,359	20,355	39,670	36,150	34,810
	S/T	-	0.64	0.77	0.89	0.51	0.57	0.54	0.27	0.25	0.20	0.10	0.06	0.05
	CMPR	kW	2.4	2.4	2.4	2.4	2.4	2.4	2.4	2.4	2.4	2.4	2.4	2.4
	LDB	°F	68.72	71.5	73.4	69.25	71.84	73.67	70.91	72.93	74.07	73.16	74.4	74.62
	LWB	°F	58.99	60.9	61.87	60.09	62.12	63.18	63.18	65.43	66.59	65.64	67.83	68.73
50	TC	Btu/h	25,500	19,000	12,200	28,700	22,200	15,100	36,983	30,968	24,245	41,970	38,330	36,490
	S/T	-	0.63	0.74	0.80	0.52	0.57	0.56	0.300	0.270	0.250	0.135	0.084	0.064
	CMPR	kW	2.3	2.3	2.3	2.3	2.3	2.3	2.4	2.3	2.3	2.4	2.4	2.3
	LDB	°F	67.7	70.74	72.78	68.22	71.17	73.08	69.96	72.47	73.62	72.42	74.02	74.47
	LWB	°F	58.33	60.47	61.53	59.45	61.7	62.84	62.61	65.08	66.31	65.3	67.62	68.62
40	TC	Btu/h	29,400	22,900	16,600	32,600	26,100	19,500	40,504	34,414	27,950	43,650	39,580	37,110
	S/T	-	0.63	0.71	0.75	0.53	0.58	0.58	0.32	0.29	0.27	0.15	0.09	0.06
	CMPR	kW	2.3	2.3	2.3	2.3	2.3	2.3	2.3	2.3	2.3	2.4	2.3	2.3
	LDB	°F	66.58	70.07	72.17	67.15	70.41	72.43	69.11	71.98	73.28	72.02	73.92	74.49
	LWB	°F	57.66	60.04	61.18	58.79	61.29	62.50	62.06	64.74	66.04	65.05	67.51	68.58

TC: Total Capacity (Btu/h); S/T: Sensible to Total Capacity Ratio; CMPR: Compressor Power (kW); LDB: Leaving Dry Bulb Temperature (°F); LWB: Leaving Wet Bulb Temperature (°F)

DRG 120 (10 Tons) With iLINQ Control In Modulating Hot Gas Reheat Mode-High Stage

EAT (DB °F)			75			75			75			75		
EAT (WB °F)			62			64			68			71		
Ambient Temperature (DB °F)		SCFM	2250	3500	4000	2250	3500	4000	2250	3500	4000	2250	3500	4000
95	TC	Btu/h	31,800	24,800	19,500	37,400	30,300	24,600	53,885	46,723	38,710	70,527	61,072	54,228
	S/T	-	0.35	0.39	0.54	0.23	0.23	0.28	0.12	0.09	0.09	0.10	0.07	0.06
	CMPR	kW	6.7	6.6	6.6	6.8	6.7	6.7	6.8	6.8	6.8	7.0	7.0	7.1
	LDB	°F	70.50	72.49	72.61	71.52	73.19	73.43	72.39	73.91	74.21	72.15	73.89	74.26
	LWB	°F	57.88	60.24	60.95	58.72	61.33	62.12	60.93	64.20	65.28	62.20	66.32	67.41
80	TC	Btu/h	47,300	41,100	42,300	54,200	48,000	47,300	72,648	67,885	63,508	91,374	89,139	83,246
	S/T	-	0.44	0.48	0.59	0.36	0.39	0.45	0.27	0.28	0.26	0.25	0.25	0.24
	CMPR	kW	5.9	5.8	5.8	5.9	5.9	5.9	5.9	6.0	6.0	5.9	6.1	6.1
	LDB	°F	66.59	69.88	69.33	67.12	70.14	70.16	67.07	70.06	71.25	65.77	69.21	70.46
	LWB	°F	55.45	58.68	59.07	56.12	59.67	60.29	58.15	62.34	63.42	59.17	63.95	65.33
75	TC	Btu/h	52,700	46,500	47,400	59,500	53,400	52,400	77,626	72,333	68,215	94,353	88,883	86,243
	S/T	-	0.46	0.50	0.58	0.38	0.41	0.45	0.28	0.28	0.28	0.26	0.27	0.26
	CMPR	kW	5.8	5.6	5.6	5.8	5.7	5.7	5.8	5.8	5.7	5.8	5.8	5.8
	LDB	°F	65.21	68.96	68.75	65.86	69.31	69.64	66.22	69.74	70.66	65.09	68.77	69.90
	LWB	°F	54.57	58.16	58.64	55.27	59.16	59.87	57.39	61.94	63.06	58.73	63.97	65.11
70	TC	Btu/h	58,100	51,900	52,500	64,900	58,800	57,500	82,762	77,278	73,408	98,240	91,498	91,998
	S/T	-	0.47	0.51	0.57	0.40	0.43	0.45	0.32	0.33	0.29	0.28	0.31	0.27
	CMPR	kW	5.6	5.4	5.4	5.6	5.5	5.5	5.6	5.6	5.6	5.6	5.6	5.7
	LDB	°F	63.97	68.12	68.20	64.51	68.43	69.12	64.30	68.38	70.16	63.89	67.63	69.35
	LWB	°F	53.67	57.63	58.20	54.39	58.64	59.45	56.58	61.48	62.66	58.14	63.74	64.68
65	TC	Btu/h	63,385	57,309	58,349	70,396	64,320	63,290	88,513	83,780	80,341	104,726	102,800	103,902
	S/T	-	0.48	0.53	0.57	0.42	0.45	0.47	0.34	0.34	0.29	0.32	0.32	0.27
	CMPR	kW	5.4	5.2	5.2	5.4	5.3	5.3	5.4	5.4	5.4	5.3	5.6	5.8
	LDB	°F	62.71	67.11	67.44	63.05	67.48	68.24	62.84	67.60	69.70	61.46	66.46	68.62
	LWB	°F	52.78	57.09	57.70	53.48	58.10	58.96	55.66	60.89	62.12	57.13	62.75	63.80

DRG (10 Tons) With iLINQ Control In Modulating Hot Gas Reheat Mode-Low Stage

EAT (DB °F)			75			75			75			75		
EAT (WB °F)			62			64			68			71		
Ambient Temperature (DB °F)		SCFM	2250	3500	4000	2250	3500	4000	2250	3500	4000	2250	3500	4000
60	TC	Btu/h	27,200	22,000	18,800	30,600	25,400	23,100	40,553	36,807	35,000	49,000	48,634	46,200
	S/T	-	0.56	0.77	0.82	0.44	0.59	0.60	0.23	0.27	0.26	0.09	0.06	0.06
	CMPR	kW	2.8	2.8	2.8	2.8	2.8	2.8	2.8	2.8	2.8	2.8	2.8	2.8
	LDB	°F	68.85	70.60	71.50	69.56	71.11	71.85	71.23	72.42	72.93	73.22	74.24	74.37
	LWB	°F	58.56	60.48	61.00	59.71	61.75	62.22	62.77	65.02	65.53	65.08	67.32	67.96
50	TC	Btu/h	31,900	26,700	23,100	35,300	30,100	27,300	44,936	41,003	42,622	50,996	50,750	48,200
	S/T	-	0.59	0.76	0.82	0.47	0.61	0.64	0.27	0.29	0.30	0.12	0.09	0.08
	CMPR	kW	2.7	2.7	2.7	2.7	2.7	2.7	2.7	2.7	2.7	2.8	2.7	2.7
	LDB	°F	67.40	69.73	70.70	68.30	70.23	71.03	70.10	71.91	72.09	72.53	73.81	74.12
	LWB	°F	57.84	60.04	60.65	59.01	61.32	61.88	62.16	64.66	64.97	64.81	67.15	67.82
40	TC	Btu/h	36,600	31,400	27,300	40,000	34,800	31,600	49,189	45,031	44,820	53,009	51,791	50,500
	S/T	-	0.60	0.76	0.83	0.50	0.63	0.66	0.30	0.32	0.32	0.14	0.10	0.07
	CMPR	kW	2.6	2.6	2.6	2.6	2.6	2.7	2.7	2.6	2.7	2.7	2.7	2.7
	LDB	°F	66.13	68.80	69.85	66.92	69.31	70.26	69.04	71.26	71.74	72.00	73.65	74.20
	LWB	°F	57.11	59.59	60.30	58.29	60.88	61.54	61.56	64.32	64.81	64.54	67.06	67.67

TC: Total Capacity (Btu/h); S/T: Sensible to Total Capacity Ratio; CMPR: Compressor Power (kW); LDB: Leaving Dry Bulb Temperature (°F); LWB: Leaving Wet Bulb Temperature (°F)

DRG 150 (12.5 Tons) With iLINQ Control In Modulating Hot Gas Reheat Mode-High Stage

EAT (DB °F)			75			75			75			75		
EAT (WB °F)			62			64			68			71		
Ambient Temperature (DB °F)		SCFM	2250	3800	4200	2250	3800	4200	2250	3800	4200	2250	3800	4200
95	TC	Btu/h	45,100	41,500	41,100	50,700	51,900	52,500	75,710	82,800	83,500	99,092	108,230	116,972
	S/T	-	0.39	0.55	0.59	0.28	0.43	0.48	0.21	0.27	0.33	0.18	0.20	0.24
	CMPR	kW	8.6	8.7	8.7	8.8	8.9	8.9	9.2	9.3	9.4	9.4	9.7	9.8
	LDB	°F	67.89	69.54	69.75	69.26	69.66	69.55	68.58	69.65	69.04	67.79	69.82	68.92
	LWB	°F	55.81	58.96	59.33	56.69	59.69	60.06	57.70	61.59	62.18	58.05	63.05	63.24
80	TC	Btu/h	51,900	54,400	55,300	57,800	60,800	61,400	79,180	86,830	88,790	99,590	114,016	116,387
	S/T	-	0.39	0.55	0.59	0.30	0.42	0.46	0.21	0.27	0.28	0.19	0.24	0.25
	CMPR	kW	7.5	7.4	7.4	7.6	7.6	7.5	7.8	7.9	8.0	7.7	8.1	8.2
	LDB	°F	66.82	67.84	67.94	67.99	68.89	68.89	68.28	69.39	69.62	67.35	68.45	68.70
	LWB	°F	54.71	57.80	58.19	55.56	58.91	59.36	57.17	61.25	61.79	57.97	62.57	63.28
75	TC	Btu/h	54,200	58,700	60,100	60,200	63,700	64,300	79,360	87,560	89,790	96,461	107,594	113,520
	S/T	-	0.39	0.54	0.59	0.30	0.42	0.45	0.20	0.26	0.27	0.19	0.25	0.25
	CMPR	kW	7.3	7.2	7.2	7.4	7.3	7.3	7.5	7.6	7.7	7.5	7.7	7.8
	LDB	°F	66.46	67.42	67.32	67.70	68.60	68.74	68.59	69.55	69.75	67.59	68.56	68.86
	LWB	°F	54.33	57.41	57.80	55.18	58.65	59.14	57.14	61.19	61.72	58.44	63.09	63.48
70	TC	Btu/h	56,500	63,000	64,800	62,500	66,700	67,300	80,630	87,630	88,890	95,709	103,755	111,401
	S/T	-	0.39	0.54	0.59	0.31	0.41	0.45	0.20	0.25	0.27	0.18	0.24	0.25
	CMPR	kW	7.0	6.9	6.9	7.2	7.1	7.1	7.3	7.4	7.4	7.3	7.4	7.5
	LDB	°F	66.10	66.86	66.72	67.17	68.46	68.44	68.48	69.76	69.81	68.04	69.04	68.97
	LWB	°F	53.96	57.01	57.41	54.80	58.38	58.90	56.94	61.19	61.79	58.55	63.40	63.63
65	TC	Btu/h	58,802	67,312	69,574	64,872	69,631	70,226	83,937	86,828	85,179	99,312	105,332	110,159
	S/T	-	0.39	0.54	0.59	0.31	0.41	0.44	0.20	0.25	0.29	0.19	0.24	0.27
	CMPR	kW	6.7	6.7	6.6	6.9	6.8	6.8	7.0	7.1	7.0	6.9	7.3	7.5
	LDB	°F	65.73	66.30	66.12	66.87	68.17	68.31	68.22	69.81	69.65	67.38	68.95	68.56
	LWB	°F	53.57	56.61	57.01	54.42	58.12	58.66	56.43	61.26	62.06	58.01	63.28	63.72

DRG 150 (12.5 Tons) With iLINQ Control In Modulating Hot Gas Reheat Mode-Low Stage

EAT (DB °F)			75			75			75			75		
EAT (WB °F)			62			64			68			71		
Ambient Temperature (DB °F)		SCFM	2250	3800	4200	2250	3800	4200	2250	3800	4200	2250	3800	4200
60	TC	Btu/h	17,700	9,000	6,200	21,500	13,100	10,600	32,772	24,946	24,671	45,000	45,260	44,510
	S/T	-	0.46	0.68	0.68	0.28	0.31	0.24	0.050	0.040	0.080	0.016	0.007	0.001
	CMPR	kW	3.7	3.6	3.6	3.7	3.6	3.6	3.7	3.7	3.7	3.8	3.8	3.8
	LDB	°F	71.71	73.54	74.09	72.57	74.03	74.45	74.34	74.76	74.57	74.71	74.92	74.99
	LWB	°F	59.98	61.75	62.03	61.04	62.95	63.24	63.84	66.18	66.37	65.60	67.87	68.23
50	TC	Btu/h	23,200	15,200	12,500	27,100	19,200	16,900	37,698	31,359	30,049	47,000	46,020	45,550
	S/T	-	0.49	0.62	0.61	0.35	0.38	0.35	0.110	0.100	0.080	0.011	0.000	0.000
	CMPR	kW	3.6	3.6	3.6	3.6	3.6	3.6	3.7	3.6	3.6	3.7	3.7	3.7
	LDB	°F	70.41	72.75	73.35	71.17	73.25	73.72	73.32	74.25	74.48	74.79	75.00	75.00
	LWB	°F	59.17	61.23	61.56	60.23	62.45	62.77	63.18	65.69	66.01	65.35	67.82	68.16
40	TC	Btu/h	28,800	21,300	18,800	32,600	25,300	23,200	42,206	36,367	35,232	46,610	45,820	45,480
	S/T	-	0.51	0.59	0.59	0.39	0.42	0.40	0.160	0.150	0.150	0.004	0.001	0.000
	CMPR	kW	3.6	3.5	3.5	3.6	3.6	3.6	3.7	3.6	3.6	3.7	3.7	3.7
	LDB	°F	69.07	71.99	72.60	69.86	72.46	72.99	72.27	73.69	73.86	74.92	74.99	75.00
	LWB	°F	58.32	60.71	61.08	59.42	61.95	62.30	62.55	65.31	65.65	65.40	67.83	68.16

TC: Total Capacity (Btu/h); S/T: Sensible to Total Capacity Ratio; CMPR: Compressor Power (kW); LDB: Leaving Dry Bulb Temperature (°F); LWB: Leaving Wet Bulb Temperature (°F)

Electrical Data

Model Number	Electrical Rating	Compressor			Outdoor Fan Motor			Indoor Fan Motor			Optional Electric Heat			Optional Powered Convenience Outlet	Optional Power Exhaust	Power Supply	
		QTY	RLA	LRA	QTY	HP	FLA	Type	HP	FLA	Part #	KW*	FLA	FLA	FLA	MCA	MOP
DRG0903D	208/230/3/60	2	13.1	83.1	2	0.33	2	Direct Drive Standard Static	2.4	8	–	–	–	-	-	41.6/41.6	50/50
											–	–	–	9.6/8.7	-	51.2/50.3	60/60
											–	–	–	-	3.3/3.0	44.9/44.6	50/50
											–	–	–	9.6/8.7	3.3/3.0	54.5/53.3	60/60
DRG0903L	208/230/3/60	2	13.1	83.1	2	0.33	2	Direct Drive Medium Static	2.4	8	–	–	–	-	-	41.6/41.6	50/50
											–	–	–	9.6/8.7	-	51.2/50.3	60/60
											–	–	–	-	3.3/3.0	44.9/44.6	50/50
											–	–	–	9.6/8.7	3.3/3.0	54.5/53.3	60/60
DRG0903W	208/230/3/60	2	13.1	83.1	2	0.33	2	Direct Drive High Static	3.5	10.9	–	–	–	-	-	44.5/44.5	50/50
											–	–	–	9.6/8.7	-	54.1/53.2	60/60
											–	–	–	-	3.3/3.0	47.8/47.5	50/50
											–	–	–	9.6/8.7	3.3/3.0	57.4/56.2	60/60
DRG0904D	460/3/60	2	6.1	41	2	0.33	0.85	Direct Drive Standard Static	2.4	5.4	–	–	–	-	-	20.8	25
											–	–	–	4.3	-	25.1	30
											–	–	–	-	1	21.8	25
											–	–	–	4.3	1	26.1	30
DRG0904L	460/3/60	2	6.1	41	2	0.33	0.85	Direct Drive Medium Static	2.4	5.4	–	–	–	-	-	20.8	25
											–	–	–	4.3	-	25.1	30
											–	–	–	-	1	21.8	25
											–	–	–	4.3	1	26.1	30
DRG0904W	460/3/60	2	6.1	41	2	0.33	0.85	Direct Drive High Static	3.5	7.2	–	–	–	-	-	22.6	25
											–	–	–	4.3	-	26.9	30
											–	–	–	-	1	23.6	25
											–	–	–	4.3	1	27.9	30
DRG0907D	575/3/60	2	4.4	33	2	0.33	0.67	Direct Drive Standard Static	2.4	4	–	–	–	-	-	15.1	20
											–	–	–	3.5	-	18.6	20
											–	–	–	-	1.2	16.3	20
											–	–	–	3.5	1.2	19.8	20
DRG0907L	575/3/60	2	4.4	33	2	0.33	0.67	Direct Drive Medium Static	2.4	4	–	–	–	-	-	15.1	20
											–	–	–	3.5	-	18.6	20
											–	–	–	-	1.2	16.3	20
											–	–	–	3.5	1.2	19.8	20
DRG0907W	575/3/60	2	4.4	33	2	0.33	0.67	Direct Drive High Static	3.5	5	–	–	–	-	-	16.1	20
											–	–	–	3.5	-	19.6	20
											–	–	–	-	1.2	17.3	20
											–	–	–	3.5	1.2	20.8	25
DRG1023D	208/230/3/60	2	14.5	98	2	0.33	2	Direct Drive Standard Static	2.4	8	–	–	–	-	-	44.6/44.6	50/50
											–	–	–	9.6/8.7	-	54.2/53.3	60/60
											–	–	–	-	3.3/3.0	47.9/47.6	50/50
											–	–	–	9.6/8.7	3.3/3.0	57.5/56.3	60/60
DRG1023L	208/230/3/60	2	14.5	98	2	0.33	2	Direct Drive Medium Static	3.5	10.9	–	–	–	-	-	47.5/47.5	60/60
											–	–	–	9.6/8.7	-	57.1/56.2	70/70
											–	–	–	-	3.3/3.0	50.8/50.5	60/60
											–	–	–	9.6/8.7	3.3/3.0	60.4/59.2	70/70
DRG1023W	208/230/3/60	2	14.5	98	2	0.33	2	Direct Drive High Static	3.5	10.9	–	–	–	-	-	47.5/47.5	60/60
											–	–	–	9.6/8.7	-	57.1/56.2	70/70
											–	–	–	-	3.3/3.0	50.8/50.5	60/60
											–	–	–	9.6/8.7	3.3/3.0	60.4/59.2	70/70
DRG1024D	460/3/60	2	6.3	55	2	0.33	0.85	Direct Drive Standard Static	2.4	5.4	–	–	–	-	-	21.4	25
											–	–	–	4.3	-	25.7	30
											–	–	–	-	1	22.4	25
											–	–	–	4.3	1	26.7	30
DRG1024L	460/3/60	2	6.3	55	2	0.33	0.85	Direct Drive Medium Static	3.5	7.2	–	–	–	-	-	23.2	25
											–	–	–	4.3	-	27.5	30
											–	–	–	-	1	24.2	25
											–	–	–	4.3	1	28.5	30

Electrical Data

Model Number	Electrical Rating	Compressor			Outdoor Fan Motor			Indoor Fan Motor			Optional Electric Heat			Optional Powered Convenience Outlet	Optional Power Exhaust	Power Supply	
		QTY	RLA	LRA	QTY	HP	FLA	Type	HP	FLA	Part #	KW*	FLA	FLA	FLA	MCA	MOP
DRG1024W	460/3/60	2	6.3	55	2	0.33	0.85	Direct Drive High Static	3.5	7.2	–	–	–	-	-	23.2	25
											–	–	–	4.3	-	27.5	30
											–	–	–	-	1	24.2	25
											–	–	–	4.3	1	28.5	30
DRG1027D	575/3/60	2	6	41	2	0.33	0.67	Direct Drive Standard Static	2.4	4	–	–	–	-	-	18.9	20
											–	–	–	3.5	-	22.4	25
											–	–	–	-	1.2	20.1	25
											–	–	–	3.5	1.2	23.6	25
DRG1027L	575/3/60	2	6	41	2	0.33	0.67	Direct Drive Medium Static	3.5	5	–	–	–	-	-	19.9	25
											–	–	–	3.5	-	23.4	25
											–	–	–	-	1.2	21.1	25
											–	–	–	3.5	1.2	24.6	25
DRG1027W	575/3/60	2	6	41	2	0.33	0.67	Direct Drive High Static	3.5	5	–	–	–	-	-	19.9	25
											–	–	–	3.5	-	23.4	25
											–	–	–	-	1.2	21.1	25
											–	–	–	3.5	1.2	24.6	25
DRG1203D	208/230/3/60	2	15.9	110	2	0.33	2	Direct Drive Standard Static	2.4	8	-	-	-	-	-	47.8/47.8	60/60
											-	-	-	9.6/8.7	-	57.4/56.5	70/70
											-	-	-	-	3.3/3.0	51.1/50.8	60/60
											-	-	-	9.6/8.7	3.3/3.0	60.7/59.5	70/70
DRG1203L	208/230/3/60	2	15.9	110	2	0.33	2	Direct Drive Medium Static	3.5	10.9	-	-	-	-	-	50.7/50.7	60/60
											-	-	-	9.6/8.7	-	60.3/59.4	70/70
											-	-	-	-	3.3/3.0	54.0/53.7	60/60
											-	-	-	9.6/8.7	3.3/3.0	63.6/62.4	70/70
DRG1203W	208/230/3/60	2	15.9	110	2	0.33	2	Direct Drive High Static	5	14.5	-	-	-	-	-	54.3/54.3	70/70
											-	-	-	9.6/8.7	-	63.9/63.0	70/70
											-	-	-	-	3.3/3.0	57.6/57.3	70/70
											-	-	-	9.6/8.7	3.3/3.0	67.2/66.0	70/70
DRG1204D	460/3/60	2	7.1	52	2	0.33	0.85	Direct Drive Standard Static	2.4	5.4	-	-	-	-	-	23	30
											-	-	-	4.3	-	27.3	30
											-	-	-	-	1	24	30
											-	-	-	4.3	1	28.3	30
DRG1204L	460/3/60	2	7.1	52	2	0.33	0.85	Direct Drive Medium Static	3.5	7.2	-	-	-	-	-	24.8	30
											-	-	-	4.3	-	29.1	35
											–	–	–	-	1	25.8	30
											–	–	–	4.3	1	30.1	35
DRG1204W	460/3/60	2	7.1	52	2	0.33	0.85	Direct Drive High Static	5	10.6	–	–	–	-	-	28.2	35
											–	–	–	4.3	-	32.5	35
											-	-	-	-	1	29.2	35
											-	-	-	4.3	1	33.5	35
DRG1207D	575/3/60	2	5.1	39.5	2	0.33	0.67	Direct Drive Standard Static	2.4	4	-	-	-	-	-	16.9	20
											-	-	-	3.5	-	20.4	25
											-	-	-	-	1.2	18.1	20
											-	-	-	3.5	1.2	21.6	25
DRG1207L	575/3/60	2	5.1	39.5	2	0.33	0.67	Direct Drive Medium Static	3.5	5	-	-	-	-	-	17.9	20
											-	-	-	3.5	-	21.4	25
											-	-	-	-	1.2	19.1	20
											-	-	-	3.5	1.2	22.6	25
DRG1207W	575/3/60	2	5.1	39.5	2	0.33	0.67	Direct Drive High Static	5	7.2	-	-	-	-	-	20.1	25
											-	-	-	3.5	-	23.6	25
											-	-	-	-	1.2	21.3	25
											-	-	-	3.5	1.2	24.8	25
DRG1503D	208/230/3/60	2	19	123	2	0.33	3.5	Direct Drive Standard Static	2.4	8	-	-	-	-	-	57.8/57.8	70/70
											-	-	-	9.6/8.7	-	67.4/66.5	80/80
											-	-	-	-	3.3/3.0	61.1/60.8	70/70
											-	-	-	9.6/8.7	3.3/3.0	70.7/69.5	80/80

Electrical Data

Model Number	Electrical Rating	Compressor			Outdoor Fan Motor			Indoor Fan Motor			Optional Electric Heat			Optional Powered Convenience Outlet	Optional Power Exhaust	Power Supply	
		QTY	RLA	LRA	QTY	HP	FLA	Type	HP	FLA	Part #	KW*	FLA	FLA	FLA	MCA	MOP
DRG1503L	208/230/3/60	2	19	123	2	0.33	3.5	Direct Drive Medium Static	3.5	10.9	-	-	-	-	-	60.7/60.7	70/70
											-	-	-	9.6/8.7	-	70.3/69.4	80/80
											-	-	-	-	3.3/3.0	64.0/63.7	70/70
											-	-	-	9.6/8.7	3.3/3.0	73.6/72.4	80/80
DRG1503W	208/230/3/60	2	19	123	2	0.33	3.5	Direct Drive High Static	5	14.5	-	-	-	-	-	64.3/64.3	80/80
											-	-	-	9.6/8.7	-	73.9/73.0	90/90
											-	-	-	-	3.3/3.0	67.6/67.3	80/80
											-	-	-	9.6/8.7	3.3/3.0	77.2/76.0	90/90
DRG1504D	460/3/60	2	9.7	62	2	0.33	1.6	Direct Drive Standard Static	2.4	5.4	-	-	-	-	-	30.5	40
											-	-	-	4.3	-	34.8	40
											-	-	-	-	1	31.5	40
											-	-	-	4.3	1	35.8	40
DRG1504L	460/3/60	2	9.7	62	2	0.33	1.6	Direct Drive Medium Static	3.5	7.2	-	-	-	-	-	32.3	40
											-	-	-	4.3	-	36.6	45
											-	-	-	-	1	33.3	40
											-	-	-	4.3	1	37.6	45
DRG1504W	460/3/60	2	9.7	62	2	0.33	1.6	Direct Drive High Static	5	10.6	-	-	-	-	-	35.7	45
											-	-	-	4.3	-	40	45
											-	-	-	-	1	36.7	45
											-	-	-	4.3	1	41	45
DRG1507D	575/3/60	2	7.4	50	2	0.33	3.5	Direct Drive Standard Static	2.4	4	-	-	-	-	-	27.7	35
											-	-	-	3.5	-	31.2	35
											-	-	-	-	1.2	28.9	35
											-	-	-	3.5	1.2	32.4	35
DRG1507L	575/3/60	2	7.4	50	2	0.33	3.5	Direct Drive Medium Static	3.5	5	-	-	-	-	-	28.7	35
											-	-	-	3.5	-	32.2	35
											-	-	-	-	1.2	29.9	35
											-	-	-	3.5	1.2	33.4	35
DRG1507W	575/3/60	2	7.4	50	2	0.33	3.5	Direct Drive High Static	5	7.2	-	-	-	-	-	30.9	35
											-	-	-	3.5	-	34.4	40
											-	-	-	-	1.2	32.1	35
											-	-	-	3.5	1.2	35.6	40

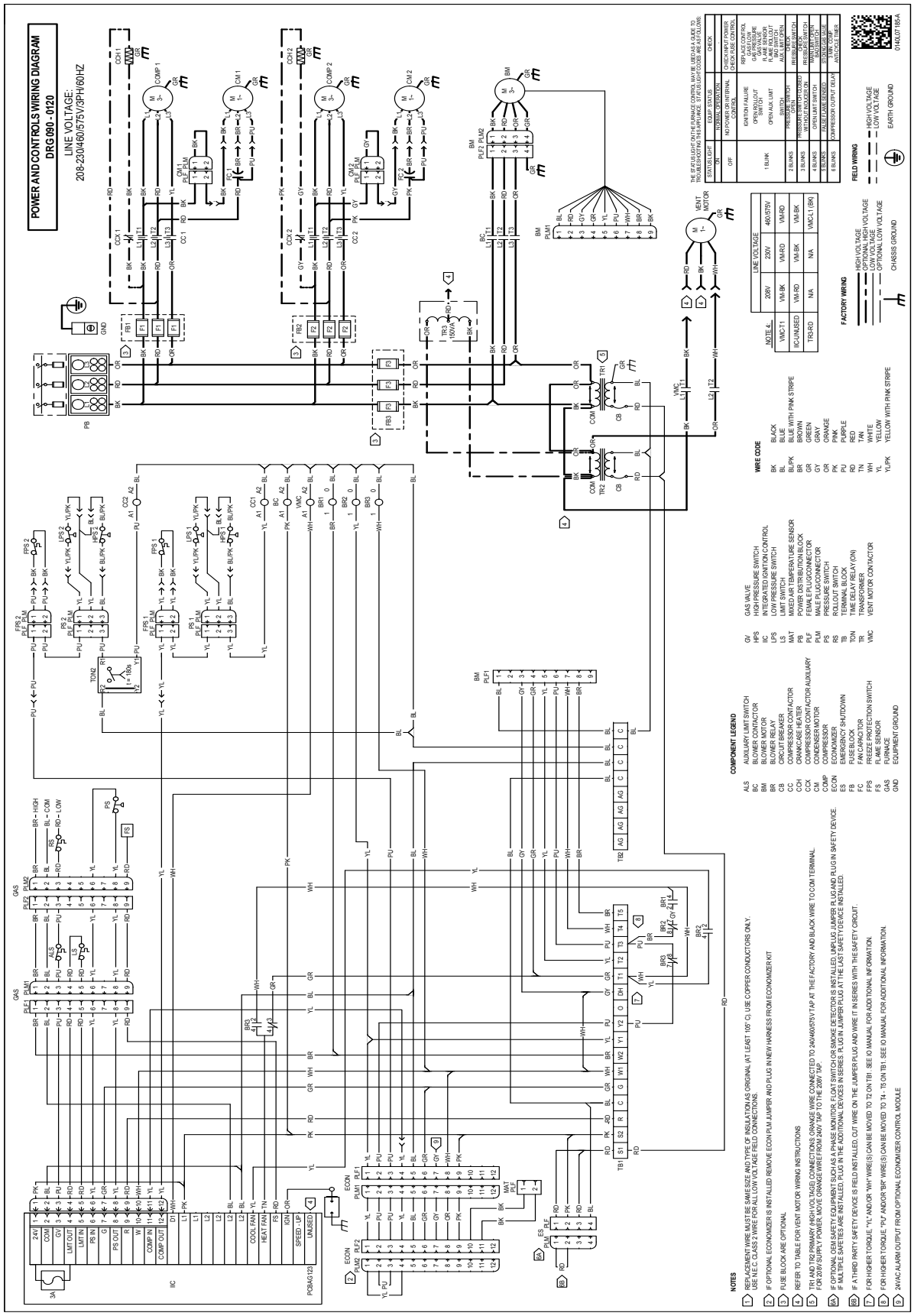

Wiring is subject to change. Always refer to the wiring diagram on the unit for the most up-to-date wiring.

WARNING

High Voltage: Disconnect all power before servicing or installing this unit. Multiple power sources may be present. Failure to do so may cause property damage, personal injury, or death.

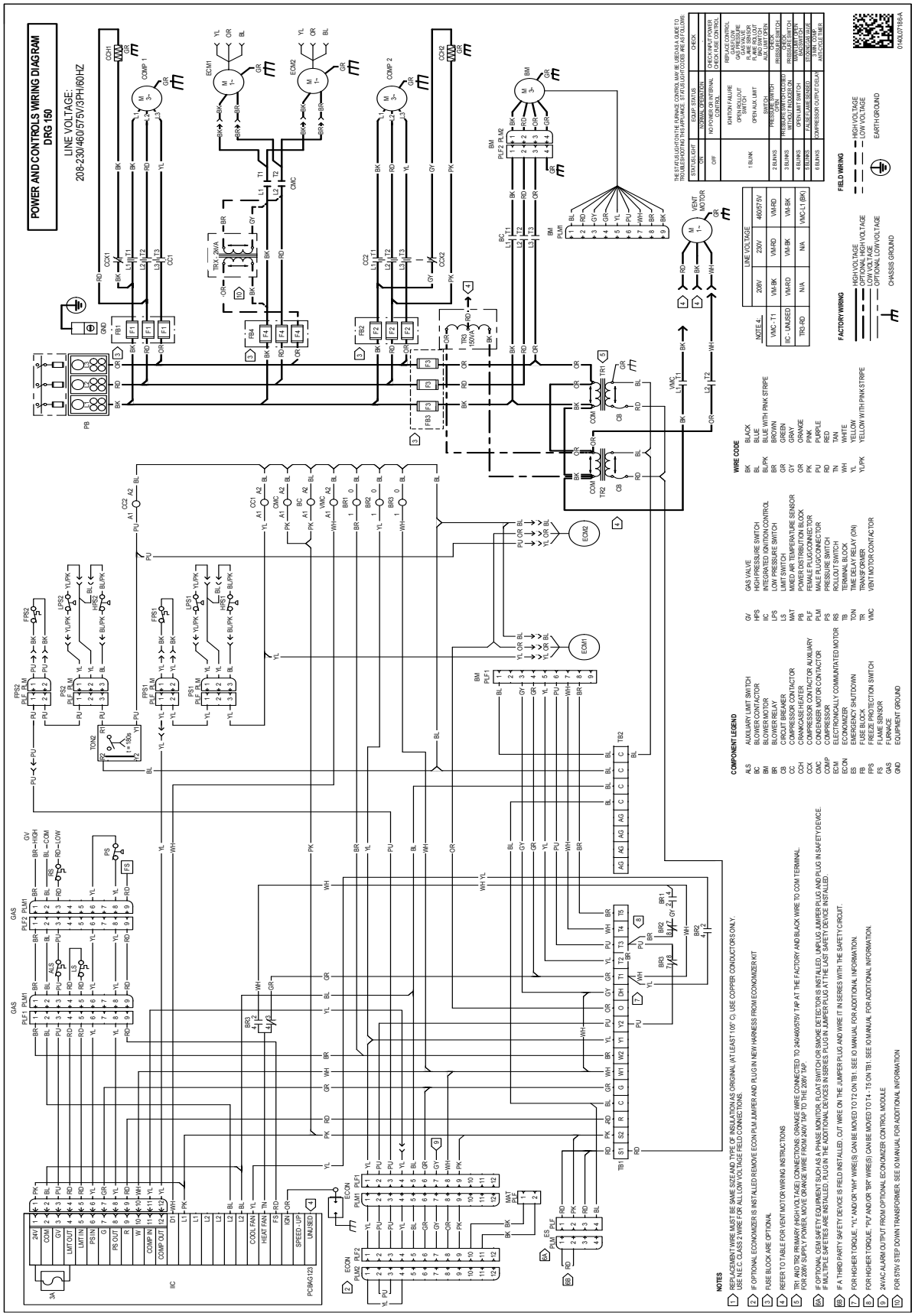

High Voltage: Disconnect all power before servicing or installing this unit. Multiple power sources may be present. Failure to do so may cause property damage, personal injury, or death.

WARNING

Wiring is subject to change. Always refer to the wiring diagram on the unit for the most up-to-date wiring.

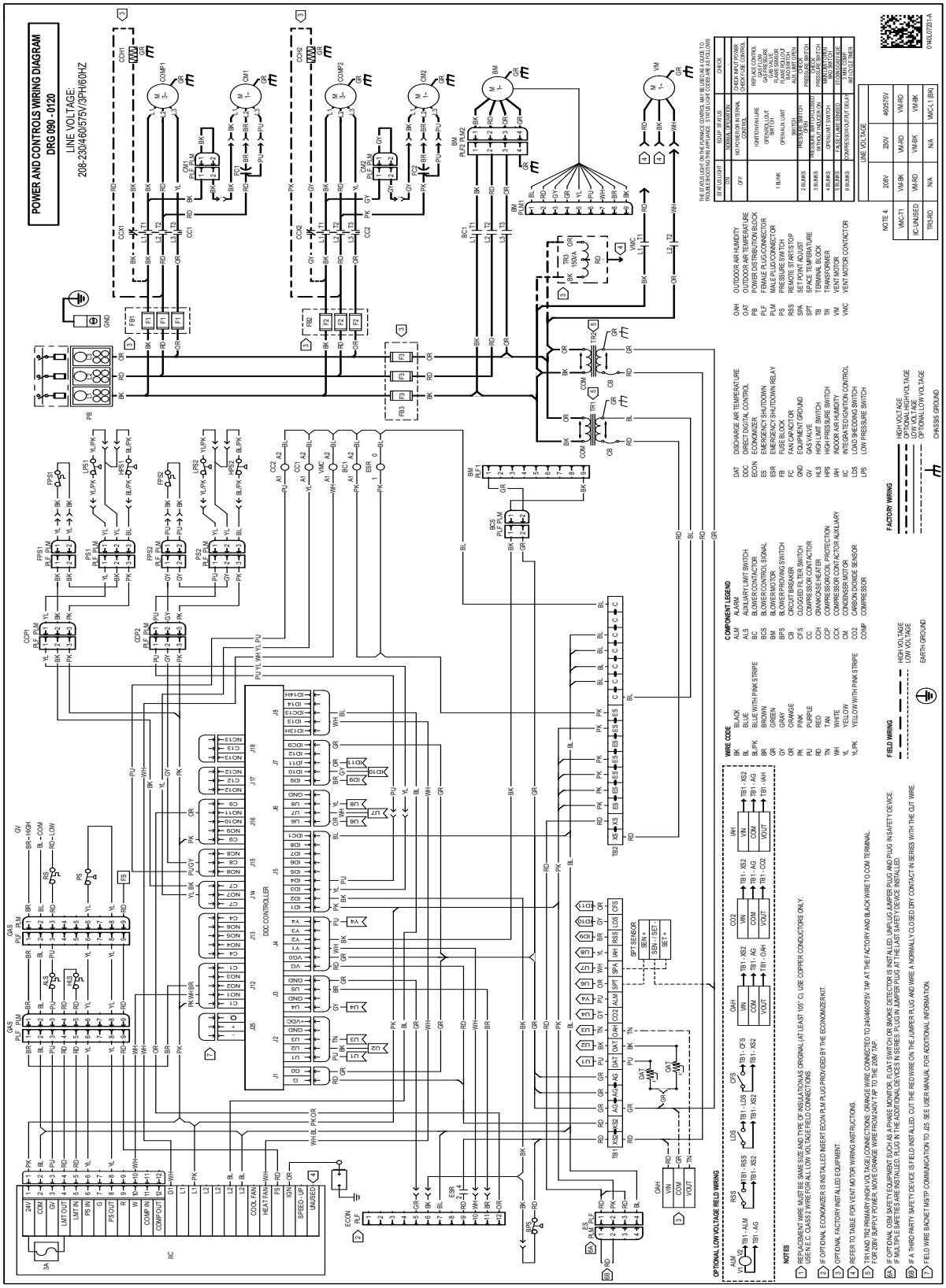

Wiring is subject to change. Always refer to the wiring diagram on the unit for the most up-to-date wiring.

WARNING

High Voltage: Disconnect all power before servicing or installing this unit. Multiple power sources may be present. Failure to do so may cause property damage, personal injury, or death.

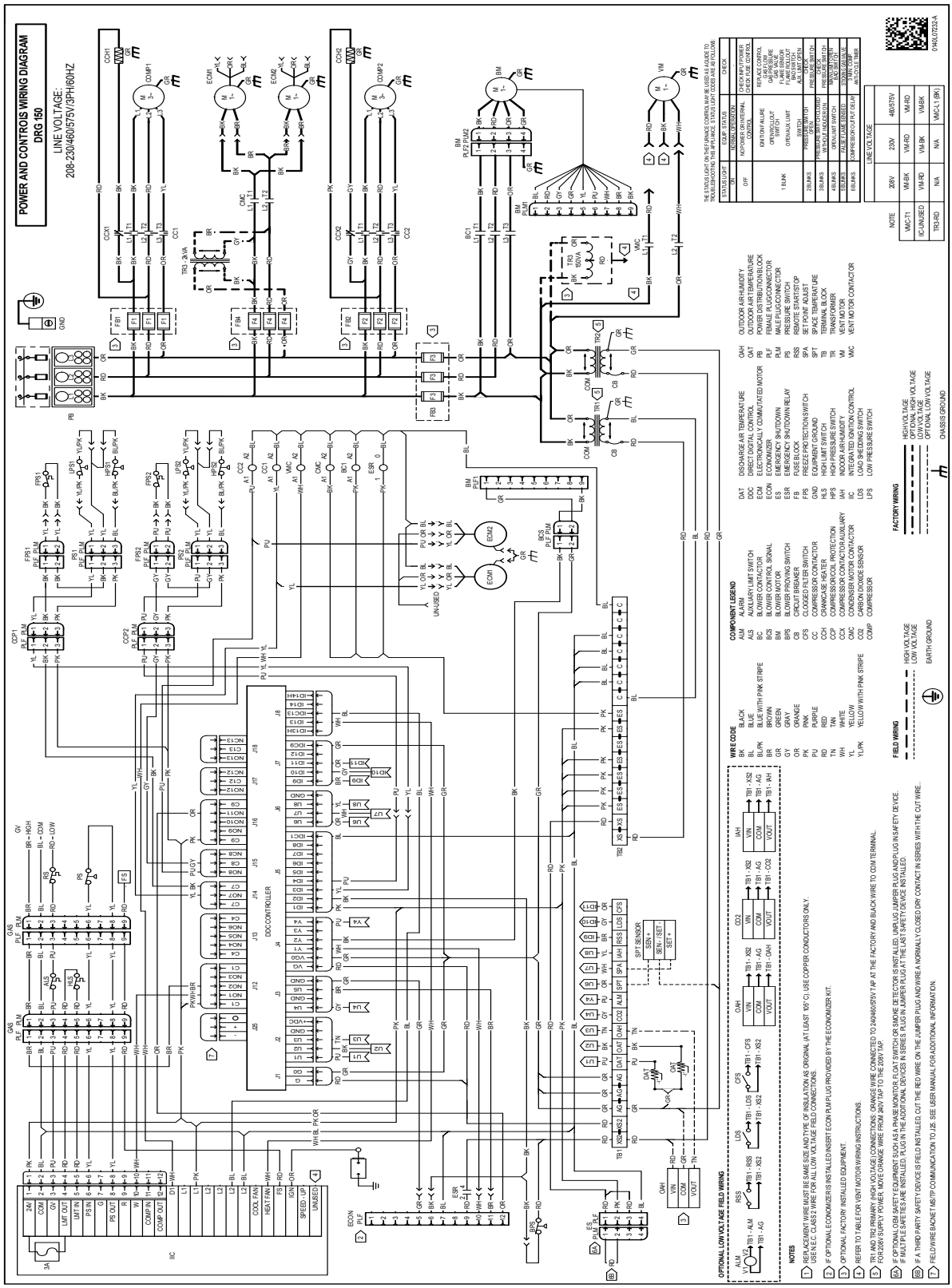

High Voltage: Disconnect all power before servicing or installing this unit. Multiple power sources may be present. Failure to do so may cause property damage, personal injury, or death.

WARNING

Wiring is subject to change. Always refer to the wiring diagram on the unit for the most up-to-date wiring.

Model Size	DIM "A"
7½ TON GAS	54 9/20
8½ TON GAS	54 9/20
10 TON GAS	54 9/20
12½ TON GAS	58 3/5

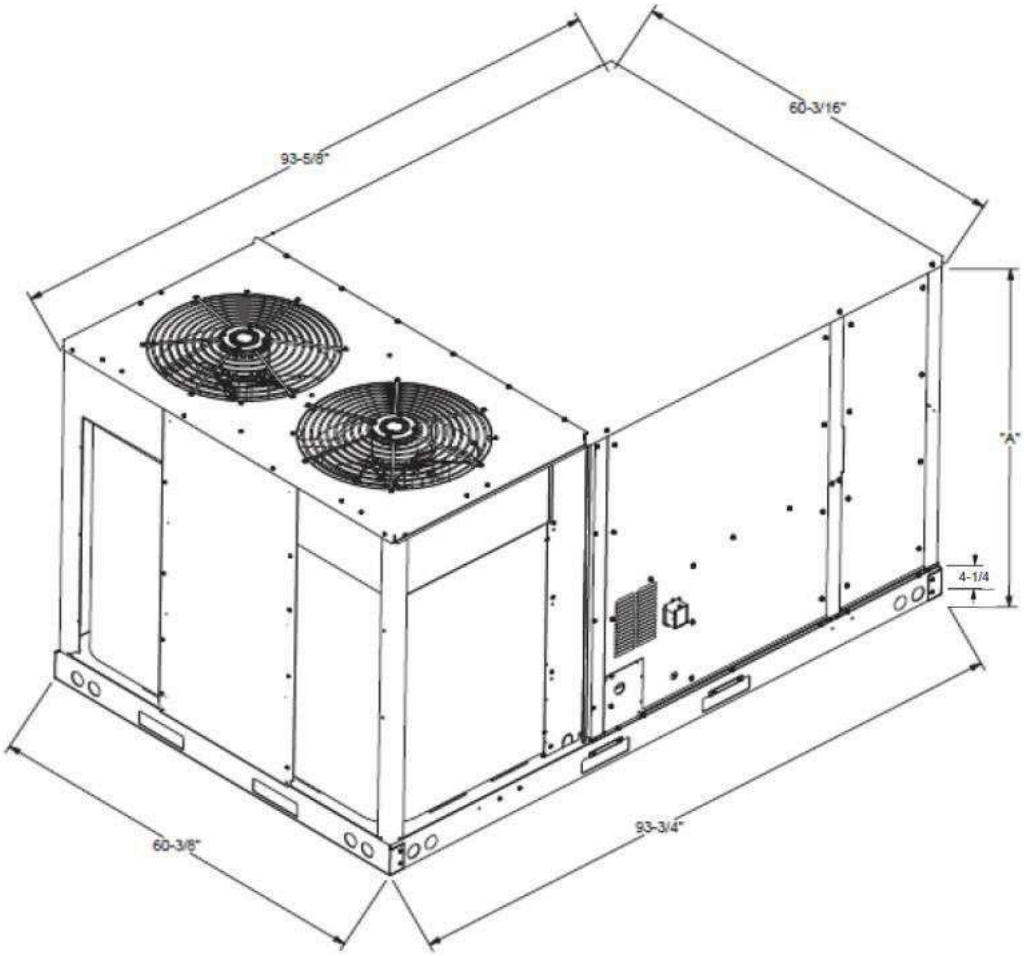

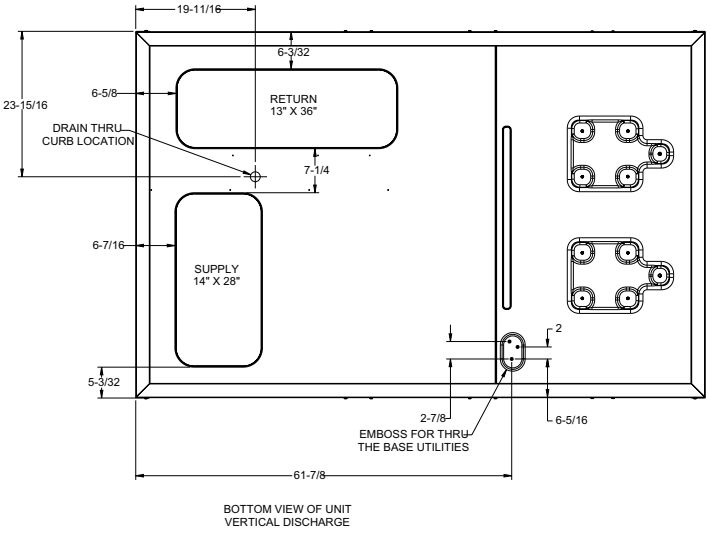

BOTTOM VIEW OF UNIT

VERTICAL DISCHARGE

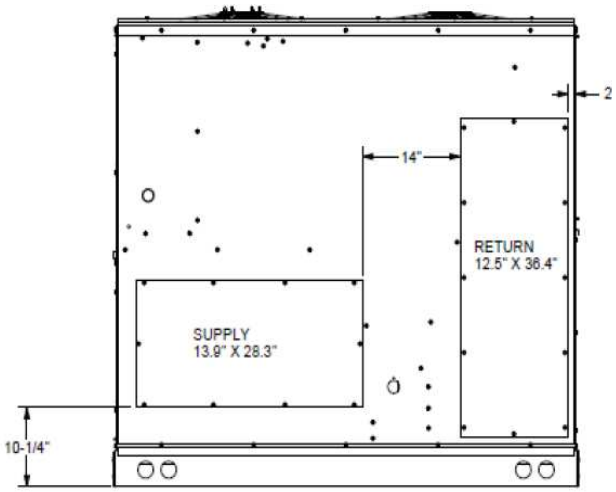

HORIZONTAL DISCHARGE

Electrical Connections

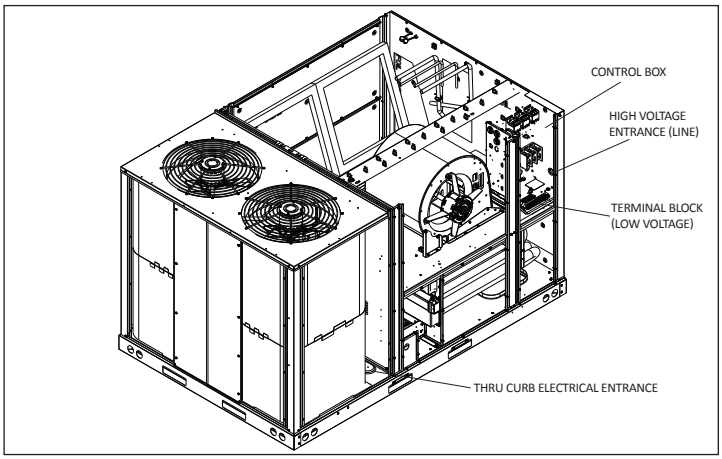

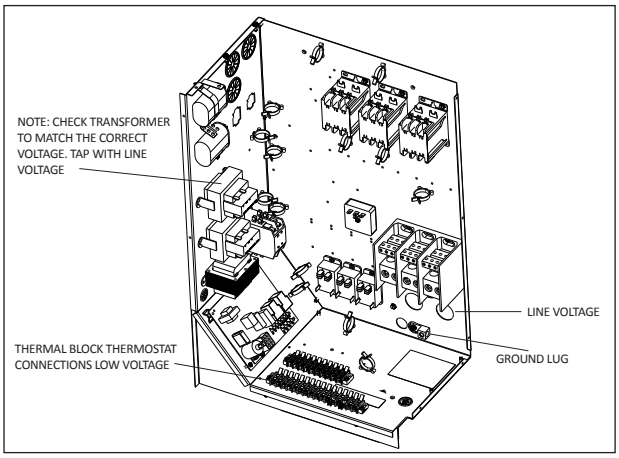

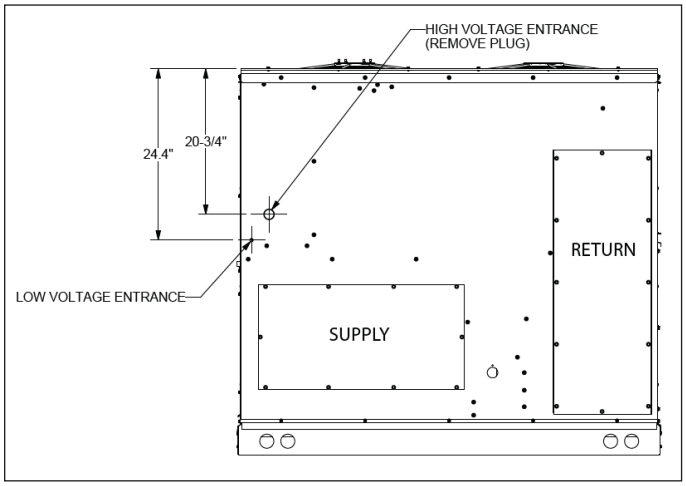

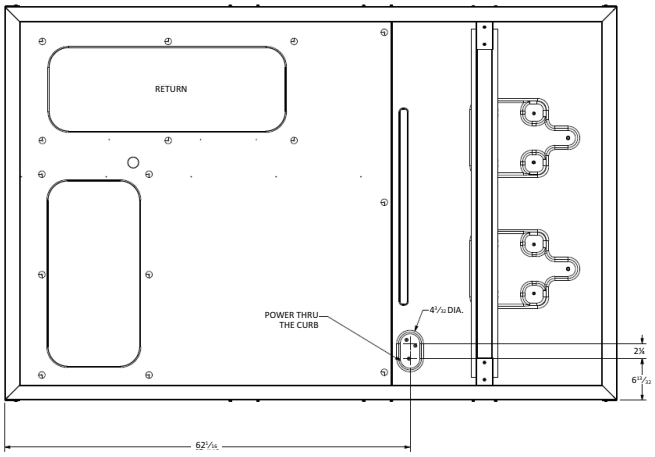

Unit Clearances

Service Clearance

Allow for recommended service clearances as shown in figure to the right. In situations that have multiple units, a 36" minimum clearance is required between the condenser coils. A clearance of 48" is recommended on all sides of the unit to allow service access and to ensure proper ventilation and condenser airflow. The top of the unit should be unobstructed. Provide a roof walkway along the sides of the unit for service and access to controls and components. Contact your Daikin sales representative for service requirements less than those recommended.

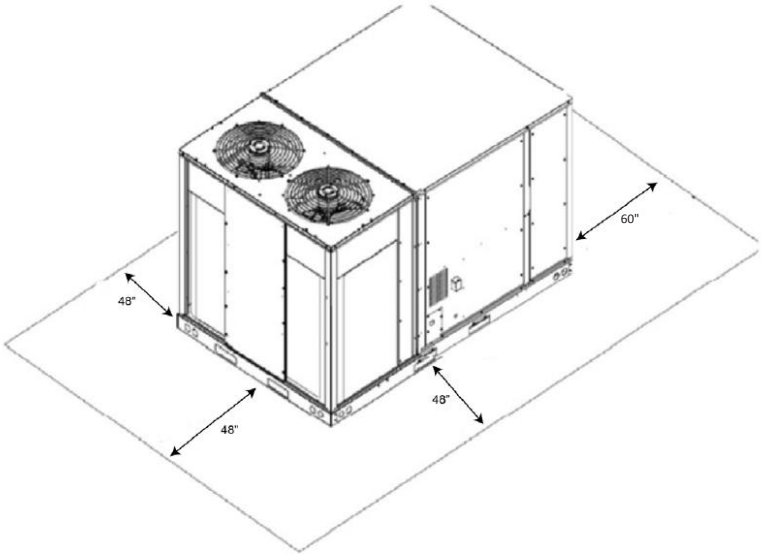

Unit Location

The structural engineer must verify that the roof has adequate support and ability to minimize deflection. Take extreme caution when using on a wooden roof structure. Unit condenser coils should be in a location that avoids any heated exhaust air.

Allow sufficient space around the unit for maintenance/service clearance. Consult your Daikin sales representative if available clearances do not meet minimum recommendations.

Where code considerations, such as the NEC, require extended clearances, these take precedence.

Provisions for forks have been included in the unit base frame. No other fork locations are approved.

» Unit must be lifted by the four lifting holes located at the base frame corners.

» Lifting cables should be attached to the unit with shackles.

» The distance between the crane hook and the top of the unit must not be less than 60".

» Two spreader bars must span over the unit to prevent damage to the cabinet by the lift cables. Spreader bars must be of sufficient length so that cables do not come in contact with the unit during transport. Remove wood struts mounted beneath unit base frame before setting unit on roof curb. These struts are intended to protect unit base frame from fork lift damage. To remove the struts, extract the sheet metal retainers and pull the struts through the base of the unit. Refer to rigging label on the unit.

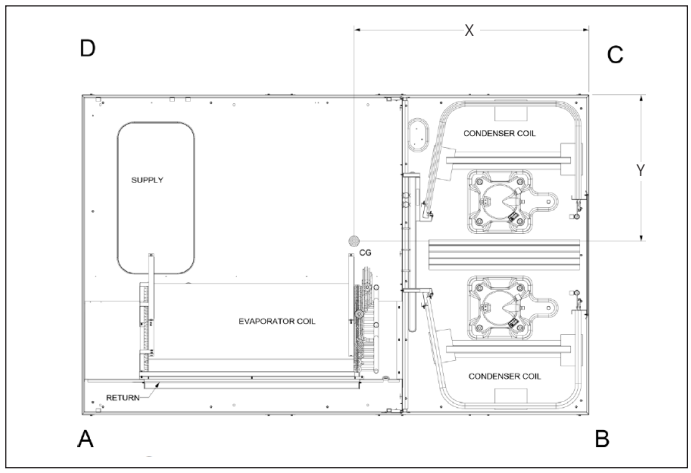

Corner & Center-of-Gravity Locations

Important: If using bottom discharge with roof curb, ductwork should be attached to the curb prior to installing the unit. Refer to the Roof Curb Installation Instructions for proper curb installation. Curbing must be installed in compliance with the National Roofing Contractors Association Manual. Lower unit carefully onto roof mounting curb. While rigging the unit, the center of gravity will cause the condenser end to be lower than the supply air end. Bring condenser end of unit into alignment with the curb. With condenser end of the unit resting on curb member and using curb as a fulcrum, lower opposite end of the unit until entire unit is seated on the curb. When a rectangular cantilever curb is used, take care to center the unit. Check for proper alignment and orientation of supply and return openings with duct.

Roof Curb Installation

The roof curb is field-assembled and must be installed level (within 1/16" per foot side to side). A sub-base must be constructed by the contractor in applications involving pitched roofs. Gaskets are furnished and must be installed between the unit and curb. For proper installation, follow NRCA guidelines. In applications requiring post and rail installation, an I-beam securely mounted on multiple posts should support the unit on each side. In addition, the insulation on the underside of the unit should be protected from the elements. Applications in geographic areas subjected to seismic or hurricane conditions must meet code requirements for fastening the unit to the curb and the curb to the building structure. For further and more detailed information please refer to our Daikin Light Commercial Packaged unit IOD.

Weights

Model	Shipping Weight (lbs)	Operating Weight (lbs)	Corner Weights (lbs)				Length	Width
			A	B	C	D	X (in)	Y (in)
DRG090	46	33	1237	1162	316¾	277¾	213¾	353¾
DRG102	46	32	1248	1173	298	302	252	321
DRG120	47	32	1267	1192	312¼	287¼	237¼	355¼
DRG150	44	30	1345	1270	301¼	366¼	324¼	278¼

Field Accessory part number	Description	Fits Model Sizes	Field-Installed	Factory-Installed	Operating Weight (lbs)
	Stainless Steel Heat Exchangers (Gas Only)				
	130,000 BTUh, 5 Burner, Std Static	7.5 Ton		√	Included in operating weight
	180,000 BTUh, 6 Burner, Std Static	7.5 Ton		√	Included in operating weight
	225,000 BTUh, 7 Burner, Std Static	7.5 Ton		√	Included in operating weight
	130,000 BTUh, 5 Burner, Std Static	8.5 Ton		√	Included in operating weight
	180,000 BTUh, 6 Burner, Std Static	8.5 Ton		√	Included in operating weight
	225,000 BTUh, 7 Burner, Std Static	8.5 Ton		√	Included in operating weight
	130,000 BTUh, 5 Burner, Std Static	10 Ton		√	Included in operating weight
	180,000 BTUh, 6 Burner, Std Static	10 Ton		√	Included in operating weight
	240,000 BTUh, 7 Burner, Std Static	10 Ton		√	Included in operating weight
	130,000 BTUh, 5 Burner, Std Static	12.5 Ton		√	Included in operating weight
	180,000 BTUh, 6 Burner, Std Static	12.5 Ton		√	Included in operating weight
	240,000 BTUh, 7 Burner, Std Static	12.5 Ton		√	Included in operating weight
	130,000 BTUh, 5 Burner, Med Static	7.5 Ton		√	Included in operating weight
	180,000 BTUh, 6 Burner, Med Static	7.5 Ton		√	Included in operating weight
	225,000 BTUh, 7 Burner, Med Static	7.5 Ton		√	Included in operating weight
	130,000 BTUh, 5 Burner, Med Static	8.5 Ton		√	Included in operating weight
	180,000 BTUh, 6 Burner, Med Static	8.5 Ton		√	Included in operating weight
	225,000 BTUh, 7 Burner, Med Static	8.5 Ton		√	Included in operating weight
	130,000 BTUh, 5 Burner, Med Static	10 Ton		√	Included in operating weight
	180,000 BTUh, 6 Burner, Med Static	10 Ton		√	Included in operating weight
	240,000 BTUh, 7 Burner, Med Static	10 Ton		√	Included in operating weight
	130,000 BTUh, 5 Burner, Med Static	12.5 Ton		√	Included in operating weight
	180,000 BTUh, 6 Burner, Med Static	12.5 Ton		√	Included in operating weight
	240,000 BTUh, 7 Burner, Med Static	12.5 Ton		√	Included in operating weight
	130,000 BTUh, 5 Burner, High Static	7.5 Ton		√	Included in operating weight
	180,000 BTUh, 6 Burner, High Static	7.5 Ton		√	Included in operating weight
	225,000 BTUh, 7 Burner, High Static	7.5 Ton		√	Included in operating weight
	130,000 BTUh, 5 Burner, High Static	8.5 Ton		√	Included in operating weight
	180,000 BTUh, 6 Burner, High Static	8.5 Ton		√	Included in operating weight
	225,000 BTUh, 7 Burner, High Static	8.5 Ton		√	Included in operating weight
	130,000 BTUh, 5 Burner, High Static	10 Ton		√	Included in operating weight
	180,000 BTUh, 6 Burner, High Static	10 Ton		√	Included in operating weight
	240,000 BTUh, 7 Burner, High Static	10 Ton		√	Included in operating weight
	130,000 BTUh, 5 Burner, High Static	12.5 Ton		√	Included in operating weight
	180,000 BTUh, 6 Burner, High Static	12.5 Ton		√	Included in operating weight
	240,000 BTUh, 7 Burner, High Static	12.5 Ton		√	Included in operating weight
	Duct Smoke Detectors				
	Duct Smoke Detectors - Return	7.5-12.5 Ton		√	
	Duct Smoke Detectors - Supply	7.5-12.5 Ton		√	
	Duct Smoke Detectors - Supply and Return	7.5-12.5 Ton		√	
	Non-Fused Disconnect Switch				
	60 Amp Disconnect	7.5-12.5 Ton		√	
	100 Amp Disconnect	7.5-12.5 Ton		√	
	150 Amp Disconnect	7.5-12.5 Ton		√	

Accessories availability may vary.

Field Accessory part number	Description	Fits Model Sizes	Field-Installed	Factory-Installed	Operating Weight (lbs)
	250 Amp Disconnect	7.5-12.5 Ton		√	
	Convenience Outlets				
	Convenience Outlets - Powered, 208/230 V	7.5-12.5 Ton		√	47
	Convenience Outlets - Powered, 460 V	7.5-12.5 Ton		√	47
	Convenience Outlets - Powered, 575 V	7.5-12.5 Ton		√	47
	Convenience Outlets - Non-Powered	7.5-12.5 Ton		√	2
	Hinged Access Panels				
	Hinged Access Panels, 54" cabinet	7.5-10 Ton		√	
	Hinged Access Panels, 58" cabinet	12.5 Ton		√	
	Economizer				
0270L01754	Downflow Economizer Standard Low-Leak JADE® Ethalpy Sensor	7.5-12.5 Ton	√	√	103
0270L01123	Downflow Economizer Standard Low-Leak *JADE* Dry-Bulb	7.5-12.5 Ton	√	√	103
0270L01756	Downflow Economizer Ultra Low-Leak (Title 24) *JADE* Ethalpy Sensor	7.5-12.5 Ton	√	√	103
0270L01125	Downflow Economizer Ultra Low-Leak (Title 24) *JADE* Dry-Bulb	7.5-12.5 Ton	√	√	103
0270L01760	Horizontal Economizer Ultra Low-Leak (Title 24) *JADE* Enthalpy Sensor	7.5-12.5 Ton	√		128
0270L01130	Horizontal Economizer Ultra Low-Leak (Title 24) *JADE* Dry-Bulb Sensor	7.5-12.5 Ton	√		128
0270L01124	DDC Downflow Economizer Standard Low-Leak Dry-Bulb	7.5-12.5 Ton	√	√	103
0270L01126	DDC Downflow Economizer Ultra Low-Leak (Title 24) Dry-Bulb	7.5-12.5 Ton	√	√	103
	DDC Downflow Economizer Standard Low-Leak Enthalpy	7.5-12.5 Ton		√	103
	DDC Downflow Economizer Ultra Low-Leak (Title 24) Enthalpy	7.5-12.5 Ton		√	103
0270L01131	DDC Horizontal Economizer Ultra Low-Leak (Title 24) Dry-Bulb Sensor	7.5-12.5 Ton	√		128
	Curbs and Restraint Clips				
0270L01153	Roof Curb 14" Tall, Knocked Down	7.5-12.5 Ton	√		116
0270L01154	Roof Curb 24" Tall, Knocked Down	7.5-12.5 Ton	√		174
0270L01251	Hold Down Bracket Kit for Daikin Roof curb	7.5-12.5 Ton	√		8
0270L01262	Hold Down Bracket Kit for Competitor's Roof curb	7.5-12.5 Ton	√		8
0221L00017	Roof Curb 14" Tall Seismic with Hold Down Brackets, Knocked Down	7.5-12.5 Ton	√		120
0221L00018	Roof Curb 14" Tall Wind-Rated Hurricane with Hold Down Brackets, Welded	7.5-12.5 Ton	√		160
	Concentrics				
0221L00011	Concentric Diffuser 30 x 48 with 20 Rd Duct Size	7.5-8.5 Ton	√		
0221L00012	Concentric Diffuser 36 x 48 with 18 x 28 Duct Size	10 Ton	√		
0221L00013	Concentric Diffuser 42 x 48 with 18 x 32 Duct Size	12.5 Ton	√		
0270L01336	Concentric Duct Adaptor Kit for 20 Rd Duct Size	7.5-8.5 Ton	√		40
0270L01768	Concentric Duct Adaptor Kit for 18 x 28 Duct Size	10 Ton	√		56
0270L01769	Concentric Duct Adaptor Kit for 18 x 32 Duct Size	12.5 Ton	√		54
	Damper				
0270L01132	Fresh Air Damper, Motorized 2 Position	7.5-12.5 Ton	√		57
0270L01133	Fresh Air Damper, Manual	7.5-12.5 Ton	√		41
	Hail Guard Kits				
HAILGD90120HE	Condenser Coil Hail Guards, 54" cabinet	7.5-10 Ton	√	√	
HAILGD150HE	Condenser Coil Hail Guards, 58" cabinet	12.5 Ton	√	√	
	Crankcase Heater Kits				
HECH90150230	Crankcase Heater Kit 208/230 V	7.5-12.5 Ton	√	√	2
HECH90150460	Crankcase Heater Kit 460 V	7.5-12.5 Ton	√	√	2
HECH90150575	Crankcase Heater Kit 575 V	7.5-12.5 Ton	√	√	2

Accessories availability may vary.

Accessories

Field Accessory part number	Description	Fits Model Sizes	Field-Installed	Factory-Installed	Operating Weight (lbs)
	High-Efficiency Filters				
0160L00269	High Efficiency MERV 8 Air Filter - 16x25x2 (qty 4 on 7.5 ton)	7.5 Ton	√		4
0160L00271	High Efficiency MERV 8 Air Filter - 20x25x2 (qty 2 on 8.5-10 ton)	8.5-10 Ton	√		4
0160L00274	High Efficiency MERV 8 Air Filter - 25x25x2 (qty 2 on 8.5-10 ton, qty 4 on 12.5 ton)	8.5-12.5 Ton	√		4
0160L00275	High Efficiency MERV 13 Air Filter - 16x25x2 (qty 4 on 7.5 ton)	7.5 Ton	√		4
0160L00202	High Efficiency MERV 13 Air Filter - 20x25x2 (qty 2 on 8.5-10 ton)	8.5-10 Ton	√		4
0160L00277	High Efficiency MERV 13 Air Filter - 25x25x2 (qty 2 on 8.5-10 ton, qty 4 on 12.5 ton)	8.5-12.5 Ton	√		4
	Flue Extensions (Gas only)				
HEFLUE090120	Flue Extension, 54" cabinet	7.5-12.5 Ton	√		
HEFLUE150	Flue Extension, 58" cabinet	7.5-12.5 Ton	√		
	Misc Accessories				
HAKT036150	High Altitude Kit (Gas only)	7.5-12.5 Ton	√		1
LPHE-090150	Propane Conversion Kit (Gas only)	7.5-12.5 Ton	√		1
TTBCKHE02	Through the Base Gas/Electrical	7.5-12.5 Ton	√	√	1
3PMKP2	Phase Monitor Kit	7.5-12.5 Ton	√	√	2
0270L01233	Burglar Bars Inserts	7.5-12.5 Ton	√		28
DPOFSK02	Drain Pan Overflow Switch Kit	7.5-12.5 Ton	√		
	Power Exhaust				
0270L01134	Downflow Prop Power Exhaust, 1 phase, 230 V	7.5-12.5 Ton	√		94
0270L01135	Downflow Prop Power Exhaust, 3 phase, 460 V	7.5-12.5 Ton	√		94
0270L01137	Horizontal Prop Power Exhaust, 1 phase, 230 V	7.5-12.5 Ton	√		76
0270L01138	Horizontal Prop Power Exhaust, 3 phase, 460 V	7.5-12.5 Ton	√		76
	Controls, Thermostats and Sensors				
DT4272C	Comm Touch Digital Stat w/ Wi-Fi 4h/2c	3-25 ton	√		1
DT4273C	Comm Touch Digital Stat w/ Wi-Fi & Humidity Control 4h/2cc	3-25 ton	√		1
PSPAC-WS	Remote indoor sensor	3-25 ton	√		1
250803400	AppStat™ RTU 2H/2C Econ	3-25 ton	√		1
250803600	AppStat™ RTU 3H/2C Econ (HP only)	3-25 ton	√		1
D4271C	4h/2c Commercial 7day Programmable Wi-Fi Capable thermostat	3-25 ton	√		1
D4272C	4h/2c Commercial 7day Programmable Wi-Fi Capable Hum/dehum thermostat	3-25 ton	√		1
C7232A1024	CO_2 Sensor (Wall Mtd)	3-25 ton	√		1
C7232B1022	CO_2 Sensor (Duct Mtd)	3-25 ton	√		1
D2270C	Mini Wi-Fi Thermostat	3-25 ton	√		1
TSTATD2152-2	Value Series 2h/1c 5+2 prgm (Heat Pump)	3-25 ton	√		1
TSTATD2100-2	Value Series 2h/1c No prgm (Heat Pump)	3-25 ton	√		1
TSTATD1100-2	Value Series 1h/1c No prgm	3-25 ton	√		1
TSTATD1152-2	Value Series 1h/1c 5+2 prgm	3-25 ton	√		1
PSPAC-AW	Add-A-Wire	3-25 ton	√		1
PSPAC-2W	2-Wire Kit	3-25 ton	√		1
PSPAC-OS	Wired Indoor / Outdoor Remote Sensor	3-25 ton	√		1
PSPAC-DS	Wired Duct Sensor	3-25 ton	√		1
PSPAC-WFMS	Wireless Wi-Fi Mini Sensor	3-25 ton	√		1
PSPAC-LR	Lock Ring for Premium Commercial Thermostats	3-25 ton	√		1
PSPAC-PWF	Wi-Fi Module	3-25 ton	√		1

Accessories availability may vary.

Field Accessory part number	Description	Fits Model Sizes	Field-Installed	Factory-Installed	Operating Weight (lbs)
PSPAC-WP	Wall Plate - Premium & Value Series	3-25 ton	√		1
PSPAC-WPT	Wall Plate Color Touch Screen	3-25 ton	√		1
PSPAC-WPM-S	Wall Plate Premium Mini - Small	3-25 ton	√		1
PSPAC-WPM-M	Wall Plate Premium Mini - Medium	3-25 ton	√		1
PSPAC-WPM-L	Wall Plate Premium Mini - Large	3-25 ton	√		1
C7400S1000	Differential Enthalpy Sensor	3-25 ton	√		1
D4120	Smoke Detector- Duct Mounted	3-25 ton	√		1
D4120W	Smoke Detector- Watertight	3-25 ton	√		1
	DDC Accessories				
0130M00584	DDC LONWORKS COMM CARD	7.5-12.5 Ton	√		1
0130L00220	DDC SPACE C02 SENSOR DUCT MOUNTED	7.5-12.5 Ton	√		1
0130L00221	DDC SPACE ENTHALPY SENSOR DUCT MOUNTED	7.5-12.5 Ton	√		1
0130L00222	DDC SPACE DRY-BULB SENSOR 4" DUCT MOUNTED	7.5-12.5 Ton	√		1
0130L00223	DDC OD ENTHALPY SENSOR	7.5-12.5 Ton	√		1
0130L00224	DDC SPACE ENTHALPY SENSOR WALL MOUNTED	7.5-12.5 Ton	√		1
0130L00225	DDC SPACE CO2 SENSOR WALL MOUNTED	7.5-12.5 Ton	√		1
0130L00226	DDC SPACE DRY-BULB SENSOR WALL MOUNTED	7.5-12.5 Ton	√		1
0130L00228	DDC SPACE DRY-BULB SENSOR 8" WALL MOUNTED	7.5-12.5 Ton	√		1

Note: Where multiple variations are available, the heaviest combination is listed.
Accessories availability may vary.

Factory Installed Options

» **Non-Powered Convenience Outlet:** A 120V, 15A, GFCI outlet can be installed in the unit making it easier for technicians to service other units once an electrician runs power to the outlet. Outlet shall be factory-installed and internally mounted with easily accessible 120-v female receptacle. Transformer not included for this option. Outlet shall include a field-installed "While-in-Use" cover.

» **High-Static Kit:** Allows for operation in higher static applications.

» **Powered Convenience Outlet:** A 120V, 15A, GFCI outlet can be powered with a step-transformer built into the unit. For use when the unit is not running. When a factory-installed powered convenience outlet is installed in the equipment, the unit MCA (Min. Circuit Ampacity) will increase by 7.5A for 208/230V units; increase by 3.75A for 460V units; and by 3A for 575V units. The MOP (Max. Overcurrent Protection) device must be sized accordingly. Outlet shall be powered from main line power to the rooftop unit. Outlet shall include a field-installed "While-in-Use" cover.

» **Stainless-Steel Heat Exchanger (Gas/Electric units only):** A tubular heat exchanger made of 409-type stainless steel can be installed in the unit.

» **Return Air and/or Supply Air Smoke Detectors:** Return air and/or supply air smoke detectors can be installed in the unit. To safely identify the presence of smoke inside the air conditioning system and shutdown the blower to prevent the smoke to disperse into different zones.

» **Disconnect Switch (non-fused):** A disconnect switch can be installed in the unit with factory wiring complete from the switch to the unit. Please note that for air conditioner and heat pump units, the appropriate electric heat kit must be ordered along with the disconnect switch (non-fused) to be factory-installed. For models with a powered convenience outlet option and a disconnect switch (non-fused) option, the power to the powered convenience outlet will be shut off when the disconnect switch (non-fused) is in the off position. National Electric Code (NEC) and UL approved non-fused switch shall provide unit power shutoff. The switch shall be accessible from outside of the unit and provide local shutdown and lockout capability.

» **Hinged Access Panels:** Allows access to unit's major components. Combined with latches for easy access to control box, compressor, filters and blower motor.

» **Through-the-base electrical connection:** Allows an easy and fast field installation through the unit base pan.

» **Through-the-base gas utility connection:** Allows an easy and fast field installation through the unit base pan.

» **Electromechanical Controls:** Basic controls that include terminal block for unit connectivity to T-Stat.

» **iLINQ DDC Controls:** Equipped with built-in BACnet™ IP and MS/TP interface or it can be used with an optional LonWorks® card that is available to integrate the Daikin RTU with building automation systems (BMS).

Field Installed Options

» **Manual Fresh Air Damper:** Manual damper package shall consist of damper, air inlet screen, and rain hood which can be preset to admit up to 25% outdoor air for year round ventilation.

» **Motorized Fresh Air Damper:** A two-position damper with rain hood and screen provides up to 50% outside air when the indoor fan starts and closes when the indoor fan shuts down. Consist of actuator, damper, air inlet screen, and rain hood. Damper shall close upon indoor (evaporator) fan shutoff and/or loss of power. The damper actuator shall plug into the rooftop unit's wiring harness plug. No hard wiring shall be required.

» **Power Exhaust:** Power exhaust shall be used in conjunction with an integrated economizer. This accessory exhausts return air and may be used in either downflow or horizontal (duct-mounted) applications. Horizontal power exhaust shall be mounted in return ductwork. Power exhaust shall be controlled by economizer controller operation. Exhaust fans shall be energized when dampers open past the 0-100% adjustable setpoint on the economizer control.

» **Horizontal Economizer:** Fully modulating between 0 and 100%, contain seals that meet ASHRAE 90.1 requirements. Includes motor and dampers, minimum position settings, preset linkage, wiring harness with plug, mixed air temperature sensor, and enthalpy control. An optional duct-mounted barometric relief damper is available. An optional return enthalpy sensor is available to provide comparative or differential enthalpy control. Damper blades shall be galvanized steel with composite gears. Plastic or composite blades on intake or return shall not be acceptable. Standard leak rate shall be equipped with dampers not to exceed 2% leakage at 1 in. wg pressure differential. Ultra Low Leak design meets California Title 24 section 140.4 and ASHRAE 90.1 requirements for 4 cfm per sq. ft. on the outside air dampers and 10 cfm per sq. ft. on the return dampers. Shall be designed to close damper(s) during loss-of-power situations with spring return built into motor. Economizer controller shall accept a 2-10 Vdc CO_2 sensor input for IAQ/DCV control. In this mode, dampers shall modulate the outdoor air damper to provide ventilation based on the sensor input.

» Economizer controller shall be Honeywell® JADE® W7220 that provides:

- 2-line LCD interface screen for setup, configuration and troubleshooting.
- On-board Fault Detection and Diagnostics (FDD) that senses and alerts when the economizer is not operating properly, per California Title 24.
- Sensor failure loss of communication identification
- Automatic sensor detection
- Capabilities for use with multiple-speed indoor fan systems
- Utilize digital sensors: Dry bulb and Enthalpy
- Economizer controller shall provide indications when in free cooling mode, in the DCV mode, or the exhaust fan contact is closed.

- **High Altitude Kit (Gas/Electric units):** Can be used in gas/electric units operating at higher altitudes.
- **Barometric relief (only when economizer is installed):** Allows air pressure relief inside the building to maintain a constant interior pressure.
- **LP Conversion Kit (Gas/Electric units):** Allows gas/electric package units to use propane fuel.
- **Roof curbs:** Full perimeter roof curb with exhaust capability providing separate air streams for energy recovery from the exhaust air without supply air contamination. Two different heights 14" and 24", allows proper installation and structure stability. Formed galvanized steel with wood nailer strip and shall be capable of supporting entire unit weight.
- **Concentric duct kits:** Designed to provide a single-point air distribution system with the added benefit of having directional air control.
- **Restraint mounting clips*:*** Allows for installation reinforcement for Hurricane and/or seismic events.
- **CO_2 sensor:** Sensor designed to alarm the system when the CO_2 levels are outside safe parameters.
- **Flue extension (Gas/Electric units):** Allows the exhaust gas produced by the heat exchanger to be redirected.
- **Burglar Bar Sleeves**: Designed to prevent the access thru the return or supply ducting inside the unit.
- **Downflow square to round adapter 18":** Installed into a recessed portion of the roof curb, the concentric duct adaptor changes the orientation of the ductwork from square to round for applications utilizing that type of ducting system.
- **Side discharge concentric diffuser system:** The Concentric diffuser system is an all in one supply and return duct free arrangement for RTU systems. This system comes with two separate duct connections, one for a supply and another for a return.
- **Remote indoor sensor:** Remote sensor to monitor the temperature on zones away from the main thermostat.
- **Drain pan overflow switch:** Allows the controls to detect and send an alarm when there is an overflow on the drain pan.
- **Freeze stat:** Temperature sensing device that monitors the heat exchange to prevent the coil from freezing.

Factory and Field Installed Options

- **Downflow Economizer:** Fully modulating between 0 and 100%, contain seals that meet ASHRAE 90.1 requirements. Includes motor and dampers, minimum position settings, a preset linkage, a wiring harness with plug, a mixed air temperature sensor, enthalpy control, and a barometric relief damper. An optional return enthalpy sensor is available to provide comparative or differential enthalpy control. Damper blades shall be galvanized steel with composite gears. Plastic or composite blades on intake or return shall not be acceptable. Standard leak rate shall be equipped with dampers not to exceed 2% leakage at 1 in. wg pressure differential. Ultra Low Leak design meets California Title 24 section 140.4 and ASHRAE 90.1 requirements for 4 cfm per sq. ft. on the outside air dampers and 10 cfm per sq. ft. on the return dampers. Shall be designed to close damper(s) during loss-of-power situations with spring return built into motor. Economizer controller shall accept a 2-10 Vdc CO_2 sensor input for IAQ/DCV control. In this mode, dampers shall modulate the outdoor air damper to provide ventilation based on the sensor input. Economizer controller shall be Honeywell® W7220 that provides:
- Economizer controller shall be *Honeywell* W7220 that provides:
  - 2-line LCD interface screen for setup, configuration and troubleshooting.
  - On-board Fault Detection and Diagnostics (FDD) that senses and alerts when the economizer is not operating properly, per California Title 24.
  - Sensor failure loss of communication identification
  - Automatic sensor detection
  - Capabilities for use with multiple-speed indoor fan systems
  - Utilize digital sensors: Dry bulb and Enthalpy
  - Economizer controller shall provide indications when in free cooling mode, in the DCV mode, or the exhaust fan contact is closed.
- **Low Ambient Control:** Allows cooling operation down to 0°F outdoor ambient temperature.
- **Phase Monitor:** Phase monitor (3-Phase only) shall provide protection for motors and compressors against problems caused by phase loss, phase reversal and phase unbalance. Phase monitor is equipped with an LED that provides an ON or FAULT indicator.
- **Condenser Hail Guards:** Louvered metal guards help protect the condenser coil from hail and debris; available as a field-installed options on 3-12½ ton units.

Our continuing commitment to quality products may mean a change in specifications without notice.
© 2021 ***DAIKIN MANUFACTURING COMPANY, L.P.*** • Houston, Texas • Printed in the USA.