DAIKIN

DP5HM

R-32 High-Efficiency Packaged Heat Pump UP TO 15.2 SEER2 / 6.7 HSPF2 2 TO 5 TONS

5 Ton

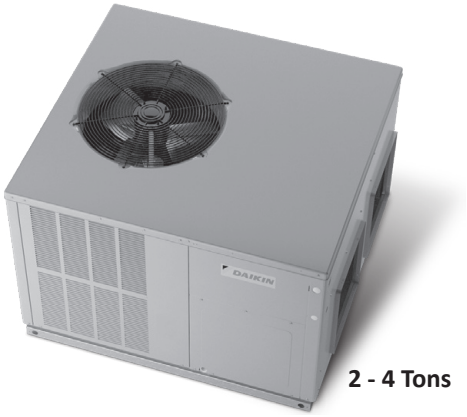

2 - 4 Tons

Contents

Nomenclature 2
Product Specifications..... 3
Expanded Cooling Data..... 4
Expanded Heating Data 26
Heat Kit Electrical Specs..... 28
Airflow Data..... 29
Dimensions..... 30
Wiring Diagram 34
Accessories 26

R32

Standard Features

- One-stage scroll compressor for 2.0 ton
- High-efficiency two-stage scroll compressor for 2.5 to 5 ton
- Two-stage heating & cooling
- Variable-speed ECM blower motor 2 to 4-ton units
- Multi-speed ECM indoor blower motor 5-ton units
- Liquid-line filter drier
- Copper tube/aluminum fin condenser coils
- All-aluminum evaporator coil (2-4 Ton)
- Copper Tube/ Aluminum Fin Evaporator coil (5 Ton)
- Compressor sound blanket
- Electric heat kit available as a field-installed option
- AHRI Certified; UL Listed

Cabinet Features

- Fully insulated heavy-gauge, zinc-coated steel cabinet with UV-resistant grey powder-paint finish
- Aluminum foil-facing internal insulation reinforced with fiberglass scrim
- Horizontal or downflow application
- Convenient access panels
- Meets cabinet air leakage requirements when tested in accordance with ASHRAE standard 193
- Louvered condenser coil protection
- When properly anchored, meets the 2023 Florida Building Code unit integrity requirements for hurricane-type winds (Anchor bracket kits available.)

* Complete warranty available from your local dealer or at www.daikincomfort.com. To receive 6-Year Unit Replacement Limited Warranty and 12-Year Parts Limited Warranty, online registration must be completed within 60 days of installation. The duration of warranty coverage may depend on the state in which you reside. Some states and provinces do not allow warranty coverage to be conditioned on registration. For a list of states and provinces that do not allow warranty coverage to be conditioned on registration, please visit www.daikincomfort.com/warranty-information or, to request a paper copy of this information, please call us at 1-855-502-3903. Additional requirements for annual maintenance are required for the 6-Year Unit Replacement Limited Warranty. Changes in law, regulations, or technology may result in an equivalent unit not being available. Other limitations and exclusions apply, refer to complete warranty details for full list of limitations and exclusions, as well as rights and obligations should an equivalent unit not be available.

D	P	5	H	M	36	3	1	A	A
1	2	3	4	5	6,7	8	9	10	11

Brand

D - Daikin Brand

Product Category

P - Packaged Unit

Efficiency

3 - 13.4 SEER2
5 - 15.2 SEER2

Unit Type

C Air Conditioner
H Heat Pump

Airflow

H Horizontal

M Multi-Position

Minor Revision

A

Major Revision

A

Electrical

1 - 208/230V single-phase, 60 Hz

Refrigerant

3 - R-32

Nominal Capacity

24 - 2 tons	42 - 3½ tons
30 - 2½ tons	48 - 4 tons
36 - 3 tons	60 - 5 tons

	DP5HM 2431	DP5HM 3031	DP5HM 3631	DP5HM 4231	DP5HM 4831	DP5HM 6031
Cooling Capacity						
Total BTU/h	24,000	29,600	36,000	42,000	45,500	60,000
Sensible BTU/h	18,720	22,200	26,640	29,820	34,580	45,000
SEER2	14.4	15.2	15.2	15.0	15.2	15.4
EER2	11.4	11.4	11.4	11.4	11.4	11.6
Heating Capacity						
BTU/h (47°F)	22,600	28,600	35,500	41,000	41,000	59,000
C.O.P. (47°F)	3.64	3.58	3.66	3.60	3.72	3.80
BTU/h (17°F)	12,900	16,900	22,800	23,400	22,600	35,000
C.O.P. (17°F)	2.18	2.34	2.38	2.16	2.14	2.50
HSPF2	6.70	6.70	6.70	6.80	6.80	7.70
Evaporator Fan / Coil						
Type	ECM	ECM	ECM	ECM	ECM	ECM
Wheel (D x W)	10 x 9	10 x 9	10 x 9	10 x 9	10 x 9	11 x 10
Indoor Nominal CFM	800	980	1200	1275	1575	1950
No. of Speeds	5	5	5	5	5	5
Indoor Blower FLA	3.8	3.8	3.8	5.4	5.4	6.9
Horsepower - RPM	1/2	1/2	3/4	3/4	3/4	1
Face Area (ft2)	4.55	4.55	6.20	6.20	6.20	9.16
Rows Deep / Fins per Inch	4 / 14	4 / 14	4 / 14	4 / 14	4 / 14	4 / 16
Metering Device Type	TXV	TXV	TXV	TXV	TXV	TXV
Drain Size (NPT)	¾"	¾"	¾"	¾"	¾"	¾"
Refrigerant Charge (oz.)	102	124	144	136	137	185
Condenser Fan / Coil						
Outdoor Fan FLA	1.3	1.3	1.4	1.4	1.4	3.5
Horsepower	¼	¼	¼	¼	¼	⅓
Blade Diameter	22	22	22	22	22	22
Face Area (ft2)	15.24	15.24	19.05	19.05	19.05	19.01
Rows Deep / Fins per Inch	2 / 16	2 / 16	2 / 16	2 / 16	2 / 16	2 / 16
Metering Device Type	TXV	TXV	TXV	TXV	TXV	TXV
Compressor						
Type	Scroll	Scroll	Scroll	Scroll	Scroll	Scroll
Stage	1	2	2	2	2	2
RLA	10.62	13.06	18.37	23.23	23.23	27.07
LRA	56.5	88	126	128.4	128.4	178
Electrical Data						
Phase	1	1	1	1	1	1
Voltage (Frequency 60 Hz)	208-230	208-230	208-230	208-230	208-230	208-230
Min. Circuit Ampacity	18.7	21.5	22.8	31.7	33.3	39
Max. Overcurrent Protection	25	30	35	50	50	60
Decibels	76	76	76	78	78	78
Operating / Shipping Weights (lbs)	376	385	492	492	492	688

Note:
Always check the S&R plate for electrical data on the unit being installed.
Wire size should be determined in accordance with National Electrical Codes. Extensive wire runs will require larger wire sizes.
Must use time-delay fuses or HACR-type circuit breakers of the same size as noted.
Horizontal duct covers along with either a "Downflow Conversion Kit" or a "Downflow Economizer" is mandatory for all downflow installations.
See Accessories table for appropriate kit number(s)

			Outdoor Ambient Temperature																							
			65ºF				75ºF				85ºF				95ºF				105ºF				115ºF			
			Entering Indoor Wet Bulb Temperature																							
IDB	Airflow		59	63	67	71	59	63	67	71	59	63	67	71	59	63	67	71	59	63	67	71	59	63	67	71
70	600	MBh	24.1	24.5	25.2	-	23.9	24.3	25.0	-	23.3	23.6	24.4	-	22.2	22.5	23.3	-	20.9	21.2	21.9	-	19.6	20.0	20.7	-
		S/T	0.53	0.45	0.31	-	0.53	0.46	0.32	-	0.56	0.48	0.34	-	1.00	0.50	0.36	-	1.00	0.52	0.38	-	1.00	0.58	0.44	-
		ΔT	20.84	19.04	15.68	-	20.79	18.99	15.63	-	21.04	19.24	15.88	-	20.77	18.97	15.61	-	20.53	18.73	15.37	-	21.66	19.86	16.49	-
		kW	1.61	1.61	1.60	-	1.81	1.80	1.80	-	2.03	2.02	2.02	-	2.26	2.26	2.26	-	2.53	2.53	2.52	-	2.84	2.84	2.84	-
		Amps	6.07	6.06	6.05	-	6.93	6.92	6.91	-	7.88	7.88	7.86	-	8.92	8.91	8.90	-	10.07	10.07	10.05	-	11.43	11.42	11.41	-
		Hi PR	250	251	253	-	290	291	293	-	332	333	334	-	377	378	379	-	425	426	428	-	477	478	480	-
		Lo PR	126	127	130	-	133	135	138	-	140	142	145	-	146	147	151	-	152	153	156	-	159	160	163	-
	800	MBh	24.7	25.1	25.8	-	24.5	24.9	25.6	-	23.9	24.2	25.0	-	22.8	23.1	23.9	-	21.4	21.8	22.5	-	20.2	20.6	21.3	-
		S/T	0.68	0.61	0.47	-	0.69	0.61	0.47	-	1.00	0.64	0.50	-	1.00	0.66	0.52	-	1.00	0.68	0.54	-	1.00	1.00	0.59	-
		ΔT	18.38	16.58	13.22	-	18.33	16.53	13.17	-	18.58	16.78	13.42	-	18.31	16.51	13.15	-	18.07	16.27	12.91	-	19.20	17.40	14.04	-
		kW	1.63	1.63	1.63	-	1.83	1.83	1.82	-	2.05	2.05	2.04	-	2.29	2.29	2.28	-	2.55	2.55	2.55	-	2.86	2.86	2.86	-
		Amps	6.17	6.16	6.15	-	7.03	7.02	7.01	-	7.98	7.98	7.96	-	9.02	9.01	9.00	-	10.17	10.17	10.15	-	11.53	11.52	11.51	-
		Hi PR	255	256	257	-	294	295	297	-	336	337	339	-	381	382	384	-	429	431	432	-	481	482	484	-
		Lo PR	129	131	134	-	137	139	142	-	144	145	149	-	150	151	154	-	155	157	160	-	162	164	167	-
	1000	MBh	25.6	25.9	26.7	-	25.4	25.7	26.4	-	24.7	25.1	25.8	-	23.6	24.0	24.7	-	22.3	22.6	23.4	-	21.1	21.4	22.1	-
		S/T	0.73	0.65	0.51	-	0.74	0.66	0.52	-	1.00	0.68	0.55	-	1.00	0.70	0.57	-	1.00	0.73	0.59	-	1.00	1.00	0.64	-
		ΔT	16.65	14.85	11.49	-	16.60	14.80	11.44	-	16.86	15.06	11.69	-	16.58	14.78	11.42	-	16.34	14.54	11.18	-	17.47	15.67	12.31	-
		kW	1.65	1.65	1.64	-	1.85	1.84	1.84	-	2.07	2.06	2.06	-	2.30	2.30	2.30	-	2.57	2.57	2.56	-	2.88	2.88	2.88	-
		Amps	6.24	6.23	6.22	-	7.10	7.09	7.08	-	8.05	8.05	8.03	-	9.09	9.08	9.07	-	10.24	10.24	10.22	-	11.60	11.59	11.58	-
		Hi PR	259	260	262	-	299	300	301	-	340	341	343	-	385	386	388	-	434	435	437	-	485	486	488	-
		Lo PR	134	135	139	-	141	143	146	-	148	150	153	-	154	156	159	-	160	161	164	-	167	168	172	-
75	600	MBh	24.2	24.5	25.2	26.3	23.9	24.3	25.0	26.1	23.3	23.6	24.4	25.5	22.2	22.6	23.3	24.4	20.9	21.2	21.9	23.1	19.6	20.0	20.7	21.8
		S/T	0.66	0.58	0.44	0.3	1.00	0.59	0.45	0.3	1.00	0.61	0.47	0.3	1.00	0.63	0.49	0.3	1.00	0.66	0.52	0.4	1.00	1.00	0.57	0.4
		ΔT	24.80	23.00	19.63	16.2	24.75	22.95	19.59	16.1	25.00	23.20	19.84	16.4	24.73	22.93	19.57	16.1	24.49	22.69	19.33	15.8	25.62	23.81	20.45	17.0
		kW	1.61	1.61	1.60	1.6	1.80	1.80	1.80	1.8	2.02	2.02	2.02	2.0	2.26	2.26	2.26	2.3	2.53	2.53	2.52	2.5	2.84	2.84	2.84	2.9
		Amps	6.06	6.06	6.04	6.1	6.92	6.91	6.90	7.0	7.88	7.87	7.86	7.9	8.91	8.90	8.89	9.0	10.07	10.06	10.05	10.1	11.42	11.42	11.40	11.5
		Hi PR	250	251	253	257.5	290	291	293	297.3	332	333	335	339.1	377	378	380	384.0	425	426	428	432.5	477	478	480	484.1
		Lo PR	126	127	130	135.9	133	135	138	143.7	140	142	145	150.5	146	148	151	156.2	152	153	156	161.8	159	160	163	168.9
	800	MBh	24.8	25.1	25.8	26.9	24.5	24.9	25.6	26.7	23.9	24.2	25.0	26.1	22.8	**23.1**	23.9	25.0	21.5	21.8	22.5	23.6	20.2	20.6	21.3	22.4
		S/T	0.82	0.74	0.60	0.5	1.00	0.74	0.61	0.5	1.00	0.77	0.63	0.5	1.00	**0.79**	0.65	0.5	1.00	1.00	0.67	0.5	1.00	1.00	0.73	0.6
		ΔT	22.34	20.54	17.18	13.7	22.29	20.49	17.13	13.6	22.54	20.74	17.38	13.9	22.27	**20.47**	17.11	13.6	22.03	20.23	16.87	13.4	23.16	21.36	18.00	14.5
		kW	1.63	1.63	1.63	1.6	1.83	1.83	1.82	1.8	2.05	2.05	2.04	2.1	2.29	**2.28**	2.28	2.3	2.55	2.55	2.55	2.6	2.86	2.86	2.86	2.9
		Amps	6.17	6.16	6.14	6.2	7.02	7.01	7.00	7.1	7.98	7.97	7.96	8.0	9.01	**9.01**	8.99	9.1	10.17	10.16	10.15	10.2	11.52	11.52	11.50	11.6
		Hi PR	255	256	258	262.0	295	296	297	301.9	336	337	339	343.6	381	**382**	384	388.5	430	431	433	437.0	481	483	484	488.7
		Lo PR	129	131	134	139.6	137	139	142	147.3	144	145	149	154.1	150	**151**	154	159.9	155	157	160	165.5	162	164	167	172.6
	1000	MBh	25.6	25.9	26.7	27.8	25.4	25.7	26.5	27.6	24.7	25.1	25.8	26.9	23.6	24.0	24.7	25.8	22.3	22.7	23.4	24.5	21.1	21.4	22.2	23.3
		S/T	1.00	0.78	0.65	0.5	1.00	0.79	0.65	0.5	1.00	0.82	0.68	0.5	1.00	1.00	0.70	0.6	1.00	1.00	0.72	0.6	1.00	1.00	0.77	0.6
		ΔT	20.61	18.81	15.45	12.0	20.56	18.76	15.40	11.9	20.81	19.01	15.65	12.2	20.54	18.74	15.38	11.9	20.30	18.50	15.14	11.7	21.43	19.63	16.27	12.8
		kW	1.65	1.65	1.64	1.7	1.84	1.84	1.84	1.9	2.06	2.06	2.06	2.1	2.30	2.30	2.30	2.3	2.57	2.57	2.56	2.6	2.88	2.88	2.87	2.9
		Amps	6.24	6.23	6.21	6.3	7.09	7.08	7.07	7.1	8.05	8.04	8.03	8.1	9.08	9.08	9.06	9.1	10.24	10.23	10.22	10.3	11.59	11.59	11.57	11.6
		Hi PR	259	260	262	266.3	299	300	302	306.1	341	342	343	347.8	385	387	388	392.8	434	435	437	441.2	486	487	488	492.9
		Lo PR																								

IDB: Entering Indoor Dry Bulb Temperature

Shaded area reflects ACCA (TVA) conditions.

kW = Total system power

Amps = outdoor unit amps (comp.+fan)

High and low pressures are measured at the liquid and suction access fittings.

Design Subcooling 8 ±2 °F @ the liquid access fitting connection AHRI 95 test conditions. Design Superheat 15 ±2 °F @ the compressor suction access fitting connection.

			Outdoor Ambient Temperature																							
			65ºF				75ºF				85ºF				95ºF				105ºF				115ºF			
			Entering Indoor Wet Bulb Temperature																							
IDB	Airflow		59	63	67	71	59	63	67	71	59	63	67	71	59	63	67	71	59	63	67	71	59	63	67	71
80	600	MBh	24.3	24.6	25.4	26.5	24.1	24.4	25.1	26.3	23.4	23.8	24.5	25.6	22.3	22.7	23.4	24.5	21.0	21.3	22.1	23.2	19.8	20.1	20.8	22.0
		S/T	1.00	0.71	0.57	0.4	1.00	0.72	0.58	0.4	1.00	0.74	0.60	0.5	1.00	1.00	0.62	0.5	1.00	1.00	0.65	0.5	1.00	1.00	0.70	0.6
		ΔT	28.78	26.98	23.62	20.1	28.73	26.93	23.57	20.1	28.99	27.19	23.82	20.3	28.71	26.91	23.55	20.1	28.47	26.67	23.31	19.8	29.60	27.80	24.44	21.0
		kW	1.61	1.61	1.60	1.6	1.81	1.80	1.80	1.8	2.03	2.02	2.02	2.0	2.26	2.26	2.26	2.3	2.53	2.53	2.52	2.5	2.84	2.84	2.84	2.9
		Amps	6.07	6.06	6.05	6.1	6.93	6.92	6.90	7.0	7.88	7.87	7.86	7.9	8.92	8.91	8.89	9.0	10.07	10.07	10.05	10.1	11.43	11.42	11.41	11.5
		Hi PR	251	252	254	258.0	291	292	293	297.8	332	333	335	339.5	377	378	380	384.5	426	427	429	432.9	477	478	480	484.6
		Lo PR	126	128	131	136.5	134	136	139	144.2	141	142	146	151.0	147	148	151	156.8	152	154	157	162.4	159	161	164	169.5
	800	MBh	24.9	25.2	26.0	27.1	24.7	25.0	25.7	26.8	24.0	24.4	25.1	26.2	22.9	23.3	**24.0**	25.1	21.6	21.9	22.7	23.8	20.4	20.7	21.4	22.5
		S/T	1.00	0.87	0.73	0.6	1.00	0.87	0.73	0.6	1.00	1.00	0.76	0.6	1.00	1.00	**0.78**	0.6	1.00	1.00	0.80	0.7	1.00	1.00	1.00	0.7
		ΔT	26.32	24.52	21.16	17.7	26.27	24.47	21.11	17.6	26.53	24.73	21.37	17.9	26.26	24.46	**21.09**	17.6	26.02	24.22	20.85	17.4	27.14	25.34	21.98	18.5
		kW	1.63	1.63	1.63	1.6	1.83	1.83	1.82	1.8	2.05	2.05	2.04	2.1	2.29	2.29	**2.28**	2.3	2.55	2.55	2.55	2.6	2.86	2.86	2.86	2.9
		Amps	6.17	6.16	6.15	6.2	7.03	7.02	7.00	7.1	7.98	7.98	7.96	8.0	9.02	9.01	**9.00**	9.1	10.17	10.17	10.15	10.2	11.53	11.52	11.51	11.6
		Hi PR	255	256	258	262.5	295	296	298	302.3	337	338	340	344.1	382	383	**385**	389.0	430	431	433	437.4	482	483	485	489.1
		Lo PR	130	131	135	140.1	138	139	142	147.9	144	146	149	154.7	150	152	**155**	160.4	156	157	161	166.1	163	164	168	173.1
	1000	MBh	25.7	26.1	26.8	27.9	25.5	25.9	26.6	27.7	24.9	25.2	25.9	27.1	23.8	24.1	24.8	26.0	22.4	22.8	23.5	24.6	21.2	21.6	22.3	23.4
		S/T	1.00	0.91	0.77	0.6	1.00	0.92	0.78	0.6	1.00	1.00	0.81	0.7	1.00	1.00	0.83	0.7	1.00	1.00	0.85	0.7	1.00	1.00	1.00	0.8
		ΔT	24.60	22.80	19.43	16.0	24.55	22.75	19.39	15.9	24.80	23.00	19.64	16.2	24.53	22.73	19.37	15.9	24.29	22.49	19.13	15.6	25.42	23.61	20.25	16.8
		kW	1.65	1.65	1.64	1.7	1.85	1.84	1.84	1.9	2.07	2.06	2.06	2.1	2.30	2.30	2.30	2.3	2.57	2.57	2.56	2.6	2.88	2.88	2.88	2.9
		Amps	6.24	6.23	6.22	6.3	7.10	7.09	7.07	7.1	8.05	8.05	8.03	8.1	9.09	9.08	9.07	9.1	10.24	10.24	10.22	10.3	11.60	11.59	11.58	11.6
		Hi PR	259	261	262	266.7	299	300	302	306.6	341	342	344	348.3	386	387	389	393.2	434	435	437	441.7	486	487	489	493.4
		Lo PR	134	136	139	144.6	142	144	147	152.3	149	150	154	159.1	155	156	159	164.9	160	162	165	170.5	167	169	172	177.6
85	600	MBh	24.7	25.0	25.8	26.9	24.5	24.8	25.6	26.7	23.8	24.2	24.9	26.0	22.7	23.1	23.8	24.9	21.4	21.7	22.5	23.6	20.2	20.5	21.3	22.4
		S/T	1.00	0.81	0.68	0.5	1.00	1.00	0.68	0.5	1.00	1.00	0.71	0.6	1.00	1.00	0.73	0.6	1.00	1.00	1.00	0.6	1.00	1.00	1.00	0.7
		ΔT	32.32	30.52	27.15	23.7	32.27	30.47	27.11	23.6	32.52	30.72	27.36	23.9	32.25	30.45	27.09	23.6	32.01	30.21	26.85	23.4	33.14	31.34	27.97	24.5
		kW	1.61	1.61	1.61	1.6	1.81	1.81	1.80	1.8	2.03	2.03	2.02	2.0	2.27	2.27	2.26	2.3	2.53	2.53	2.53	2.5	2.85	2.84	2.84	2.9
		Amps	6.09	6.08	6.06	6.1	6.94	6.94	6.92	7.0	7.90	7.89	7.88	7.9	8.93	8.93	8.91	9.0	10.09	10.08	10.07	10.1	11.44	11.44	11.42	11.5
		Hi PR	252	253	255	259.2	292	293	295	299.0	333	335	336	340.7	378	379	381	385.7	427	428	430	434.1	479	480	481	485.8
		Lo PR	128	130	133	138.4	136	137	141	146.1	143	144	148	152.9	148	150	153	158.7	154	156	159	164.3	161	163	166	171.4
	800	MBh	25.3	25.6	26.4	27.5	25.1	25.4	26.1	27.3	24.4	24.8	25.5	26.6	23.3	23.7	24.4	25.5	22.0	22.3	23.1	24.2	20.8	21.1	21.8	23.0
		S/T	1.00	0.97	0.83	0.7	1.00	1.00	0.84	0.7	1.00	1.00	0.86	0.7	1.00	1.00	0.88	0.7	1.00	1.00	1.00	0.8	1.00	1.00	1.00	0.8
		ΔT	29.86	28.06	24.70	21.2	29.81	28.01	24.65	21.2	30.06	28.26	24.90	21.4	29.79	27.99	24.63	21.1	29.55	27.75	24.39	20.9	30.68	28.88	25.52	22.0
		kW	1.64	1.63	1.63	1.6	1.83	1.83	1.83	1.8	2.05	2.05	2.05	2.1	2.29	2.29	2.29	2.3	2.56	2.55	2.55	2.6	2.87	2.87	2.86	2.9
		Amps	6.19	6.18	6.16	6.2	7.04	7.04	7.02	7.1	8.00	7.99	7.98	8.0	9.03	9.03	9.01	9.1	10.19	10.18	10.17	10.2	11.55	11.54	11.52	11.6
		Hi PR	256	258	259	263.7	296	297	299	303.5	338	339	341	345.3	383	384	386	390.2	431	432	434	438.6	483	484	486	490.3
		Lo PR	132	133	137	142.1	140	141	144	149.8	146	148	151	156.6	152	154	157	162.3	158	159	163	168.0	165	166	170	175.0
	1000	MBh	26.1	26.5	27.2	28.3	25.9	26.3	27.0	28.1	25.3	25.6	26.4	27.5	24.2	24.5	25.3	26.4	22.8	23.2	23.9	25.0	21.6	22.0	22.7	23.8
		S/T	1.00	1.00	0.88	0.7	1.00	1.00	0.88	0.7	1.00	1.00	0.91	0.8	1.00	1.00	1.00	0.8	1.00	1.00	1.00	0.8	1.00	1.00	1.00	0.9
		ΔT	28.13	26.33	22.97	19.5	28.08	26.28	22.92	19.4	28.33	26.53	23.17	19.7	28.06	26.26	22.90	19.4	27.82	26.02	22.66	19.2	28.95	27.15	23.79	20.3
		kW	1.65	1.65	1.65	1.7	1.85	1.85	1.84	1.9	2.07	2.07	2.06	2.1	2.31	2.31	2.30	2.3	2.57	2.57	2.57	2.6	2.88	2.88	2.88	2.9
		Amps	6.26	6.25	6.23	6.3	7.11	7.11	7.09	7.2	8.07	8.06	8.05	8.1	9.10	9.10	9.08	9.1	10.26	10.25	10.24	10.3	11.62	11.61	11.59	11.7
		Hi PR	261	262	264	267.9	300	302	303	307.7	342	343	345	349.5	387	388	390	394.4	436	437	438	442.8	487	488	490	494.5
		Lo PR	136	138	141	146.5	144	146	149	154.2	151	152	156	161.0	157	158	161	166.8	162	164	167	172.4	169	171	174	179.5

IDB: Entering Indoor Dry Bulb Temperature

Shaded area reflects AHRI conditions.

kW = Total system power

High and low pressures are measured at the liquid and suction access fittings.

Amps = outdoor unit amps (comp.+fan)

Design Subcooling 8 ±2 °F @ the liquid access fitting connection AHRI 95 test conditions. Design Superheat 15 ±2 °F @ the compressor suction access fitting connection.

			Outdoor Ambient Temperature																							
			65ºF				75ºF				85ºF				95ºF				105ºF				115ºF			
			Entering Indoor Wet Bulb Temperature																							
IDB	Airflow		59	63	67	71	59	63	67	71	59	63	67	71	59	63	67	71	59	63	67	71	59	63	67	71
70	500	MBh	21.4	21.7	22.3	-	21.2	21.5	22.1	-	20.6	20.9	21.6	-	19.7	20.0	20.6	-	18.5	18.8	19.4	-	17.4	17.7	18.3	-
		S/T	0.51	0.43	0.29	-	0.51	0.44	0.30	-	0.54	0.46	0.32	-	1.00	0.48	0.34	-	1.00	0.50	0.37	-	1.00	0.56	0.42	-
		ΔT	19.32	17.67	14.58	-	19.28	17.62	14.53	-	19.51	17.86	14.77	-	19.26	17.61	14.52	-	19.04	17.39	14.30	-	20.08	18.42	15.33	-
		kW	1.23	1.23	1.23	-	1.39	1.39	1.39	-	1.57	1.56	1.56	-	1.75	1.75	1.75	-	1.97	1.97	1.96	-	2.21	2.21	2.21	-
		Amps	4.66	4.65	4.64	-	5.34	5.33	5.32	-	6.10	6.09	6.08	-	6.92	6.92	6.90	-	7.84	7.84	7.82	-	8.92	8.91	8.90	-
		Hi PR	243	244	245	-	281	282	284	-	322	323	325	-	365	367	368	-	413	414	415	-	463	464	466	-
		Lo PR	125	127	130	-	133	135	138	-	140	142	145	-	146	147	150	-	151	153	156	-	158	160	163	-
	680	MBh	21.9	22.2	22.9	-	21.7	22.0	22.7	-	21.2	21.5	22.1	-	20.2	20.5	21.2	-	19.0	19.3	20.0	-	17.9	18.2	18.9	-
		S/T	0.68	0.60	0.46	-	0.68	0.60	0.47	-	1.00	0.63	0.49	-	1.00	0.65	0.51	-	1.00	0.67	0.53	-	1.00	1.00	0.59	-
		ΔT	16.89	15.24	12.15	-	16.85	15.19	12.10	-	17.08	15.42	12.34	-	16.83	15.18	12.09	-	16.61	14.95	11.86	-	17.64	15.99	12.90	-
		kW	1.25	1.25	1.25	-	1.41	1.41	1.41	-	1.59	1.58	1.58	-	1.77	1.77	1.77	-	1.99	1.98	1.98	-	2.23	2.23	2.23	-
		Amps	4.74	4.74	4.73	-	5.42	5.42	5.41	-	6.18	6.18	6.17	-	7.01	7.00	6.99	-	7.93	7.92	7.91	-	9.01	9.00	8.99	-
		Hi PR	247	248	250	-	286	287	289	-	327	328	329	-	370	371	373	-	417	418	420	-	467	469	470	-
		Lo PR	129	131	134	-	137	139	142	-	144	145	149	-	150	151	154	-	155	157	160	-	162	164	167	-
	800	MBh	22.4	22.7	23.4	-	22.2	22.6	23.2	-	21.7	22.0	22.6	-	20.7	21.0	21.7	-	19.5	19.8	20.5	-	18.4	18.7	19.4	-
		S/T	0.72	0.64	0.50	-	0.72	0.65	0.51	-	1.00	0.67	0.53	-	1.00	0.69	0.55	-	1.00	0.71	0.58	-	1.00	1.00	0.63	-
		ΔT	15.73	14.08	10.99	-	15.69	14.03	10.95	-	15.92	14.27	11.18	-	15.67	14.02	10.93	-	15.45	13.80	10.71	-	16.49	14.83	11.74	-
		kW	1.26	1.26	1.26	-	1.42	1.42	1.42	-	1.59	1.59	1.59	-	1.78	1.78	1.78	-	2.00	1.99	1.99	-	2.24	2.24	2.24	-
		Amps	4.78	4.78	4.77	-	5.47	5.46	5.45	-	6.23	6.22	6.21	-	7.05	7.04	7.03	-	7.97	7.96	7.95	-	9.05	9.04	9.03	-
		Hi PR	250	251	253	-	289	290	292	-	329	330	332	-	373	374	376	-	420	421	423	-	470	471	473	-
		Lo PR	132	134	137	-	140	142	145	-	147	148	152	-	153	154	157	-	158	160	163	-	165	167	170	-
75	500	MBh	21.4	21.7	22.4	23.3	21.2	21.5	22.2	23.1	20.6	20.9	21.6	22.6	19.7	20.0	20.6	21.6	18.5	18.8	19.4	20.4	17.4	17.7	18.3	19.3
		S/T	0.64	0.56	0.42	0.3	1.00	0.57	0.43	0.3	1.00	0.59	0.45	0.3	1.00	0.61	0.47	0.3	1.00	0.63	0.50	0.4	1.00	1.00	0.55	0.4
		ΔT	22.96	21.31	18.22	15.0	22.92	21.26	18.17	15.0	23.15	21.49	18.40	15.2	22.90	21.24	18.15	15.0	22.68	21.02	17.93	14.7	23.71	22.06	18.97	15.8
		kW	1.23	1.23	1.23	1.2	1.39	1.39	1.39	1.4	1.56	1.56	1.56	1.6	1.75	1.75	1.75	1.8	1.97	1.96	1.96	2.0	2.21	2.21	2.21	2.2
		Amps	4.65	4.65	4.64	4.7	5.33	5.33	5.32	5.4	6.09	6.09	6.08	6.1	6.92	6.91	6.90	7.0	7.84	7.83	7.82	7.9	8.92	8.91	8.90	9.0
		Hi PR	243	244	246	249.9	282	283	284	288.6	322	323	325	329.1	366	367	368	372.8	413	414	416	419.8	463	464	466	470.1
		Lo PR	125	127	130	135.7	133	135	138	143.4	140	142	145	150.2	146	147	151	155.9	151	153	156	161.6	158	160	163	168.6
	680	MBh	21.9	22.3	22.9	23.9	21.8	22.1	22.7	23.7	21.2	21.5	22.1	23.1	20.2	**20.5**	21.2	22.2	19.0	19.3	20.0	21.0	17.9	18.2	18.9	19.9
		S/T	0.81	0.73	0.59	0.4	1.00	0.74	0.60	0.5	1.00	0.76	0.62	0.5	1.00	**0.78**	0.64	0.5	1.00	1.00	0.67	0.5	1.00	1.00	0.72	0.6
		ΔT	20.53	18.88	15.79	12.6	20.48	18.83	15.74	12.5	20.72	19.06	15.97	12.8	20.47	**18.81**	15.72	12.5	20.25	18.59	15.50	12.3	21.28	19.63	16.54	13.3
		kW	1.25	1.25	1.25	1.3	1.41	1.41	1.41	1.4	1.58	1.58	1.58	1.6	1.77	**1.77**	1.77	1.8	1.99	1.98	1.98	2.0	2.23	2.23	2.23	2.2
		Amps	4.74	4.73	4.72	4.8	5.42	5.41	5.40	5.5	6.18	6.18	6.16	6.2	7.00	**7.00**	6.99	7.0	7.92	7.92	7.91	8.0	9.00	9.00	8.98	9.0
		Hi PR	248	249	250	254.6	286	287	289	293.3	327	328	330	333.8	370	**371**	373	377.5	417	419	420	424.5	468	469	470	474.8
		Lo PR	129	131	134	139.5	137	139	142	147.3	144	145	149	154.1	150	**151**	154	159.8	155	157	160	165.5	162	164	167	172.5
	800	MBh	22.5	22.8	23.4	24.4	22.3	22.6	23.2	24.2	21.7	22.0	22.6	23.6	20.7	21.0	21.7	22.7	19.5	19.8	20.5	21.5	18.4	18.8	19.4	20.4
		S/T	0.85	0.77	0.63	0.5	1.00	0.78	0.64	0.5	1.00	0.80	0.67	0.5	1.00	0.82	0.69	0.5	1.00	1.00	0.71	0.6	1.00	1.00	0.76	0.6
		ΔT	19.37	17.72	14.63	11.4	19.33	17.67	14.58	11.4	19.56	17.91	14.82	11.6	19.31	17.66	14.57	11.4	19.09	17.43	14.35	11.1	20.13	18.47	15.38	12.2
		kW	1.26	1.26	1.26	1.3	1.42	1.42	1.41	1.4	1.59	1.59	1.59	1.6	1.78	1.78	1.78	1.8	1.99	1.99	1.99	2.0	2.24	2.24	2.24	2.3
		Amps	4.78	4.77	4.76	4.8	5.46	5.46	5.44	5.5	6.22	6.22	6.20	6.3	7.04	7.04	7.03	7.1	7.96	7.96	7.95	8.0	9.04	9.04	9.02	9.1
		Hi PR	250	251	253	257.4	289	290	292	296.1	330	331	332	336.7	373	374	376	380.3	420	421	423	427.4	471	472	473	477.6
		Lo PR	132	134	137	142.6	140	142	145	150.3	147	148	152	157.1	153	154	157	162.8	158	160	163	168.5	165	167	170	175.5

IDB: Entering Indoor Dry Bulb Temperature

Shaded area reflects ACCA (TVA) conditions.

kW = Total system power

High and low pressures are measured at the liquid and suction access fittings.

Amps = outdoor unit amps (comp.+fan)

Design Subcooling 8 ±2 °F @ the liquid access fitting connection AHRI 95 test conditions. Design Superheat 15 ±2 °F @ the compressor suction access fitting connection.

Expanded Cooling Data — DP5HM3031 (High Stage) (Cont.)

			Outdoor Ambient Temperature																							
			65ºF				75ºF				85ºF				95ºF				105ºF				115ºF			
			Entering Indoor Wet Bulb Temperature																							
IDB	Airflow		59	63	67	71	59	63	67	71	59	63	67	71	59	63	67	71	59	63	67	71	59	63	67	71
80	500	MBh	21.5	21.8	22.5	23.5	21.3	21.6	22.3	23.3	20.8	21.1	21.7	22.7	19.8	20.1	20.7	21.7	18.6	18.9	19.5	20.5	17.5	17.8	18.5	19.4
		S/T	1.00	0.69	0.55	0.4	1.00	0.69	0.56	0.4	1.00	0.72	0.58	0.4	1.00	1.00	0.60	0.5	1.00	1.00	0.62	0.5	1.00	1.00	0.68	0.5
		ΔT	26.62	24.97	21.88	18.7	26.58	24.92	21.83	18.6	26.81	25.16	22.07	18.9	26.56	24.91	21.82	18.6	26.34	24.69	21.60	18.4	27.38	25.72	22.63	19.4
		kW	1.23	1.23	1.23	1.2	1.39	1.39	1.39	1.4	1.57	1.56	1.56	1.6	1.75	1.75	1.75	1.8	1.97	1.96	1.96	2.0	2.21	2.21	2.21	2.2
		Amps	4.66	4.65	4.64	4.7	5.34	5.33	5.32	5.4	6.10	6.09	6.08	6.1	6.92	6.92	6.90	7.0	7.84	7.83	7.82	7.9	8.92	8.91	8.90	9.0
		Hi PR	243	244	246	250.3	282	283	285	289.0	323	324	325	329.6	366	367	369	373.2	413	414	416	420.3	463	465	466	470.5
		Lo PR	126	128	131	136.2	134	135	139	144.0	141	142	145	150.8	146	148	151	156.5	152	153	157	162.1	159	161	164	169.2
	680	MBh	22.1	22.4	23.0	24.0	21.9	22.2	22.8	23.8	21.3	21.6	22.3	23.2	20.3	20.6	**21.3**	22.3	19.1	19.4	20.1	21.1	18.1	18.4	19.0	20.0
		S/T	1.00	0.86	0.72	0.6	1.00	0.86	0.73	0.6	1.00	1.00	0.75	0.6	1.00	1.00	**0.77**	0.6	1.00	1.00	0.79	0.6	1.00	1.00	1.00	0.7
		ΔT	24.19	22.54	19.45	16.2	24.15	22.49	19.40	16.2	24.38	22.73	19.64	16.4	24.13	22.48	**19.39**	16.2	23.91	22.26	19.17	16.0	24.95	23.29	20.20	17.0
		kW	1.25	1.25	1.25	1.3	1.41	1.41	1.41	1.4	1.59	1.58	1.58	1.6	1.77	1.77	**1.77**	1.8	1.99	1.98	1.98	2.0	2.23	2.23	2.23	2.2
		Amps	4.74	4.74	4.73	4.8	5.42	5.42	5.41	5.5	6.18	6.18	6.17	6.2	7.01	7.00	**6.99**	7.0	7.93	7.92	7.91	8.0	9.00	9.00	8.99	9.0
		Hi PR	248	249	251	255.0	287	288	289	293.7	327	328	330	334.3	371	372	**374**	377.9	418	419	421	425.0	468	469	471	475.2
		Lo PR	130	131	135	140.1	138	139	142	147.9	144	146	149	154.6	150	152	**155**	160.4	156	157	161	166.0	163	164	168	173.1
	800	MBh	22.6	22.9	23.5	24.5	22.4	22.7	23.3	24.3	21.8	22.1	22.8	23.7	20.8	21.1	21.8	22.8	19.6	19.9	20.6	21.6	18.6	18.9	19.5	20.5
		S/T	1.00	0.90	0.76	0.6	1.00	0.90	0.77	0.6	1.00	1.00	0.79	0.6	1.00	1.00	0.81	0.7	1.00	1.00	0.83	0.7	1.00	1.00	1.00	0.7
		ΔT	23.04	21.38	18.29	15.1	22.99	21.34	18.25	15.0	23.22	21.57	18.48	15.3	22.97	21.32	18.23	15.0	22.75	21.10	18.01	14.8	23.79	22.13	19.04	15.8
		kW	1.26	1.26	1.26	1.3	1.42	1.42	1.42	1.4	1.59	1.59	1.59	1.6	1.78	1.78	1.78	1.8	2.00	1.99	1.99	2.0	2.24	2.24	2.24	2.3
		Amps	4.78	4.78	4.77	4.8	5.46	5.46	5.45	5.5	6.22	6.22	6.21	6.3	7.05	7.04	7.03	7.1	7.97	7.96	7.95	8.0	9.05	9.04	9.03	9.1
		Hi PR	251	252	254	257.9	290	291	292	296.6	330	331	333	337.1	374	375	377	380.8	421	422	424	427.8	471	472	474	478.1
		Lo PR	133	134	138	143.1	141	142	145	150.9	147	149	152	157.7	153	155	158	163.4	159	160	164	169.0	166	167	171	176.1
85	500	MBh	21.9	22.2	22.8	23.8	21.7	22.0	22.6	23.6	21.1	21.4	22.1	23.1	20.1	20.4	21.1	22.1	19.0	19.3	19.9	20.9	17.9	18.2	18.8	19.8
		S/T	1.00	0.79	0.65	0.5	1.00	1.00	0.66	0.5	1.00	1.00	0.68	0.5	1.00	1.00	0.70	0.6	1.00	1.00	1.00	0.6	1.00	1.00	1.00	0.6
		ΔT	29.87	28.22	25.13	21.9	29.83	28.17	25.08	21.9	30.06	28.41	25.32	22.1	29.81	28.16	25.07	21.9	29.59	27.93	24.85	21.6	30.63	28.97	25.88	22.7
		kW	1.24	1.24	1.23	1.2	1.39	1.39	1.39	1.4	1.57	1.57	1.56	1.6	1.76	1.76	1.75	1.8	1.97	1.97	1.97	2.0	2.22	2.22	2.21	2.2
		Amps	4.67	4.66	4.65	4.7	5.35	5.35	5.33	5.4	6.11	6.11	6.09	6.1	6.93	6.93	6.92	7.0	7.85	7.85	7.84	7.9	8.93	8.93	8.91	9.0
		Hi PR	244	245	247	251.5	283	284	286	290.2	324	325	326	330.7	367	368	370	374.4	414	415	417	421.4	465	466	467	471.7
		Lo PR	128	129	133	138.1	136	137	140	145.9	142	144	147	152.7	148	150	153	158.4	154	155	159	164.1	161	162	166	171.1
	680	MBh	22.4	22.7	23.4	24.4	22.2	22.5	23.2	24.2	21.7	22.0	22.6	23.6	20.7	21.0	21.6	22.6	19.5	19.8	20.5	21.4	18.4	18.7	19.4	20.4
		S/T	1.00	0.96	0.82	0.7	1.00	1.00	0.83	0.7	1.00	1.00	0.85	0.7	1.00	1.00	0.87	0.7	1.00	1.00	1.00	0.8	1.00	1.00	1.00	0.8
		ΔT	27.44	25.79	22.70	19.5	27.40	25.74	22.65	19.5	27.63	25.97	22.88	19.7	27.38	25.72	22.64	19.4	27.16	25.50	22.41	19.2	28.19	26.54	23.45	20.2
		kW	1.26	1.26	1.25	1.3	1.41	1.41	1.41	1.4	1.59	1.59	1.58	1.6	1.78	1.78	1.77	1.8	1.99	1.99	1.99	2.0	2.24	2.24	2.23	2.2
		Amps	4.76	4.75	4.74	4.8	5.44	5.43	5.42	5.5	6.20	6.19	6.18	6.2	7.02	7.01	7.00	7.1	7.94	7.93	7.92	8.0	9.02	9.01	9.00	9.1
		Hi PR	249	250	252	256.2	288	289	291	294.9	328	329	331	335.4	372	373	375	379.1	419	420	422	426.1	469	470	472	476.4
		Lo PR	132	133	137	142.0	140	141	144	149.8	146	148	151	156.6	152	154	157	162.3	158	159	163	167.9	165	166	170	175.0
	800	MBh	22.9	23.2	23.9	24.9	22.7	23.0	23.7	24.7	22.2	22.5	23.1	24.1	21.2	21.5	22.1	23.1	20.0	20.3	21.0	21.9	18.9	19.2	19.9	20.9
		S/T	1.00	1.00	0.86	0.7	1.00	1.00	0.87	0.7	1.00	1.00	0.90	0.8	1.00	1.00	1.00	0.8	1.00	1.00	1.00	0.8	1.00	1.00	1.00	0.8
		ΔT	26.28	24.63	21.54	18.3	26.24	24.58	21.49	18.3	26.47	24.82	21.73	18.5	26.22	24.57	21.48	18.3	26.00	24.35	21.26	18.1	27.04	25.38	22.29	19.1
		kW	1.27	1.26	1.26	1.3	1.42	1.42	1.42	1.4	1.60	1.60	1.59	1.6	1.79	1.79	1.78	1.8	2.00	2.00	1.99	2.0	2.25	2.25	2.24	2.3
		Amps	4.80	4.79	4.78	4.8	5.48	5.47	5.46	5.5	6.24	6.23	6.22	6.3	7.06	7.06	7.04	7.1	7.98	7.97	7.96	8.0	9.06	9.05	9.04	9.1
		Hi PR	252	253	255	259.1	291	292	293	297.7	331	332	334	338.3	375	376	378	381.9	422	423	425	429.0	472	473	475	479.2
		Lo PR	135	136	140	145.0	143	144	147	152.8	149	151	154	159.6	155	157	160	165.3	161	162	166	170.9	168	169	173	178.0

IDB: Entering Indoor Dry Bulb Temperature

Shaded area reflects AHRI conditions.

kW = Total system power

High and low pressures are measured at the liquid and suction access fittings.

Amps = outdoor unit amps (comp.+fan)

Design Subcooling 8 ±2 °F @ the liquid access fitting connection AHRI 95 test conditions. Design Superheat 15 ±2 °F @ the compressor suction access fitting connection.

Expanded Cooling Data — DP5HM3031 (Low Stage)

			Outdoor Ambient Temperature																							
			65ºF				75ºF				85ºF				95ºF				105ºF				115ºF			
			Entering Indoor Wet Bulb Temperature																							
IDB	Airflow		59	63	67	71	59	63	67	71	59	63	67	71	59	63	67	71	59	63	67	71	59	63	67	71
70	800	MBh	30.0	30.4	31.3	-	29.7	30.1	31.0	-	28.9	29.3	30.2	-	27.5	28.0	28.9	-	25.9	26.3	27.2	-	24.4	24.8	25.7	-
		S/T	0.56	0.48	0.35	-	0.57	0.49	0.36	-	0.59	0.52	0.38	-	0.61	0.54	0.40	-	1.00	0.56	0.42	-	1.00	0.61	0.47	-
		ΔT	19.11	17.40	14.19	-	19.06	17.35	14.15	-	19.31	17.59	14.39	-	19.05	17.33	14.13	-	18.82	17.10	13.90	-	19.89	18.18	14.97	-
		kW	1.97	1.97	1.97	-	2.22	2.22	2.22	-	2.50	2.50	2.49	-	2.80	2.80	2.80	-	3.14	3.14	3.13	-	3.53	3.53	3.53	-
		Amps	7.45	7.45	7.43	-	8.54	8.53	8.51	-	9.75	9.74	9.72	-	11.05	11.05	11.03	-	12.52	12.51	12.49	-	14.23	14.22	14.20	-
		Hi PR	255	257	258	-	296	297	299	-	338	339	341	-	384	385	387	-	433	434	436	-	486	487	489	-
		Lo PR	123	125	128	-	131	132	135	-	137	139	142	-	143	144	148	-	148	150	153	-	155	157	160	-
	980	MBh	30.5	30.9	31.8	-	30.2	30.7	31.6	-	29.5	29.9	30.8	-	28.1	28.5	29.4	-	26.4	26.9	27.8	-	24.9	25.4	26.3	-
		S/T	0.66	0.58	0.45	-	0.66	0.59	0.45	-	0.69	0.61	0.48	-	1.00	0.63	0.50	-	1.00	0.65	0.52	-	1.00	0.71	0.57	-
		ΔT	17.50	15.79	12.59	-	17.46	15.74	12.54	-	17.70	15.98	12.78	-	17.44	15.73	12.52	-	17.21	15.50	12.30	-	18.28	16.57	13.37	-
		kW	1.99	1.99	1.99	-	2.24	2.24	2.24	-	2.52	2.52	2.51	-	2.82	2.82	2.82	-	3.16	3.16	3.15	-	3.55	3.55	3.55	-
		Amps	7.54	7.53	7.51	-	8.62	8.62	8.60	-	9.83	9.82	9.81	-	11.14	11.13	11.11	-	12.60	12.59	12.58	-	14.32	14.31	14.29	-
		Hi PR	259	260	262	-	299	300	302	-	342	343	344	-	387	388	390	-	436	438	439	-	489	490	492	-
		Lo PR	126	127	130	-	133	135	138	-	140	141	145	-	145	147	150	-	151	152	156	-	158	159	163	-
	1200	MBh	31.4	31.9	32.8	-	31.2	31.6	32.5	-	30.4	30.8	31.7	-	29.0	29.4	30.3	-	27.4	27.8	28.7	-	25.9	26.3	27.2	-
		S/T	0.70	0.63	0.49	-	0.71	0.63	0.50	-	1.00	0.66	0.52	-	1.00	0.68	0.54	-	1.00	0.70	0.56	-	1.00	0.75	0.62	-
		ΔT	16.01	14.30	11.10	-	15.96	14.25	11.05	-	16.21	14.49	11.29	-	15.95	14.23	11.03	-	15.72	14.00	10.80	-	16.79	15.08	11.88	-
		kW	2.01	2.01	2.01	-	2.26	2.26	2.25	-	2.54	2.54	2.53	-	2.84	2.84	2.83	-	3.18	3.17	3.17	-	3.57	3.57	3.56	-
		Amps	7.62	7.61	7.59	-	8.70	8.70	8.68	-	9.91	9.90	9.89	-	11.22	11.21	11.19	-	12.68	12.67	12.66	-	14.40	14.39	14.37	-
		Hi PR	263	264	265	-	303	304	306	-	345	347	348	-	391	392	394	-	440	441	443	-	493	494	496	-
		Lo PR	130	131	134	-	137	139	142	-	144	145	148	-	149	151	154	-	155	156	159	-	162	163	166	-
75	800	MBh	30.0	30.4	31.3	32.7	29.7	30.1	31.0	32.4	28.9	29.3	30.2	31.6	27.6	28.0	28.9	30.3	25.9	26.3	27.2	28.6	24.4	24.8	25.7	27.1
		S/T	0.69	0.61	0.48	0.3	0.69	0.62	0.48	0.3	1.00	0.64	0.51	0.4	1.00	0.66	0.53	0.4	1.00	0.68	0.55	0.4	1.00	1.00	0.60	0.5
		ΔT	22.88	21.17	17.96	14.6	22.83	21.12	17.92	14.6	23.08	21.36	18.16	14.8	22.82	21.10	17.90	14.6	22.59	20.87	17.67	14.4	23.66	21.95	18.74	15.4
		kW	1.97	1.97	1.97	2.0	2.22	2.22	2.21	2.2	2.50	2.50	2.49	2.5	2.80	2.80	2.79	2.8	3.14	3.13	3.13	3.1	3.53	3.53	3.52	3.5
		Amps	7.45	7.44	7.42	7.5	8.53	8.52	8.50	8.6	9.74	9.73	9.71	9.8	11.05	11.04	11.02	11.1	12.51	12.50	12.48	12.6	14.22	14.21	14.20	14.3
		Hi PR	256	257	259	263.0	296	297	299	303.5	339	340	341	345.9	384	385	387	391.6	433	435	436	440.8	486	487	489	493.3
		Lo PR	123	125	128	133.1	131	132	135	140.6	137	139	142	147.2	143	144	148	152.8	148	150	153	158.3	155	157	160	165.2
	980	MBh	30.5	31.0	31.9	33.2	30.3	30.7	31.6	33.0	29.5	29.9	30.8	32.2	28.1	**28.5**	29.4	30.8	26.5	26.9	27.8	29.2	25.0	25.4	26.3	27.7
		S/T	0.79	0.71	0.58	0.4	1.00	0.72	0.58	0.4	1.00	0.74	0.61	0.5	1.00	**0.76**	0.63	0.5	1.00	0.78	0.65	0.5	1.00	1.00	0.70	0.6
		ΔT	21.27	19.56	16.36	13.0	21.23	19.51	16.31	13.0	21.47	19.75	16.55	13.2	21.21	**19.50**	16.29	13.0	20.98	19.27	16.07	12.7	22.05	20.34	17.14	13.8
		kW	1.99	1.99	1.99	2.0	2.24	2.24	2.23	2.3	2.52	2.52	2.51	2.5	2.82	**2.82**	2.81	2.8	3.16	3.15	3.15	3.2	3.55	3.55	3.54	3.6
		Amps	7.53	7.53	7.51	7.6	8.62	8.61	8.59	8.7	9.83	9.82	9.80	9.9	11.13	**11.13**	11.11	11.2	12.60	12.59	12.57	12.7	14.31	14.30	14.28	14.4
		Hi PR	259	260	262	266.3	299	301	302	306.8	342	343	345	349.2	387	**389**	390	394.8	437	438	440	444.1	489	490	492	496.6
		Lo PR	126	127	130	135.7	133	135	138	143.3	140	141	145	149.9	146	**147**	150	155.5	151	153	156	160.9	158	159	163	167.8
	1200	MBh	31.4	31.9	32.8	34.1	31.2	31.6	32.5	33.9	30.4	30.8	31.7	33.1	29.0	29.5	30.4	31.7	27.4	27.8	28.7	30.1	25.9	26.3	27.2	28.6
		S/T	0.83	0.75	0.62	0.5	1.00	0.76	0.63	0.5	1.00	0.79	0.65	0.5	1.00	0.80	0.67	0.5	1.00	1.00	0.69	0.6	1.00	1.00	0.74	0.6
		ΔT	19.78	18.07	14.87	11.5	19.73	18.02	14.82	11.5	19.98	18.26	15.06	11.7	19.72	18.00	14.80	11.5	19.49	17.77	14.57	11.3	20.56	18.85	15.65	12.3
		kW	2.01	2.01	2.00	2.0	2.26	2.26	2.25	2.3	2.54	2.54	2.53	2.6	2.84	2.84	2.83	2.9	3.17	3.17	3.17	3.2	3.57	3.57	3.56	3.6
		Amps	7.61	7.61	7.59	7.7	8.70	8.69	8.67	8.8	9.91	9.90	9.88	10.0	11.21	11.21	11.19	11.3	12.68	12.67	12.65	12.7	14.39	14.38	14.36	14.4
		Hi PR	263	264	266	270.1	303	304	306	310.6	346	347	349	353.0	391	392	394	398.7	441	442	443	447.9	493	494	496	500.4
		Lo PR	130	131	134	139.6	137	139	142	147.1	144	145	148	153.7	149	151	154	159.3	155	156	159	164.8	162	163	166	171.6

IDB: Entering Indoor Dry Bulb Temperature

Shaded area reflects ACCA (TVA) conditions.

kW = Total system power

Amps = outdoor unit amps (comp.+fan)

High and low pressures are measured at the liquid and suction access fittings.

Design Subcooling 8 ±2 °F @ the liquid access fitting connection AHRI 95 test conditions. Design Superheat 15 ±2 °F @ the compressor suction access fitting connection.

Expanded Cooling Data —DP5HM3031 (Low Stage) (Cont.)

			Outdoor Ambient Temperature																							
			65ºF				75ºF				85ºF				95ºF				105ºF				115ºF			
			Entering Indoor Wet Bulb Temperature																							
IDB	Airflow		59	63	67	71	59	63	67	71	59	63	67	71	59	63	67	71	59	63	67	71	59	63	67	71
80	800	MBh	30.1	30.6	31.4	32.8	29.9	30.3	31.2	32.6	29.1	29.5	30.4	31.8	27.7	28.1	29.0	30.4	26.1	26.5	27.4	28.8	24.6	25.0	25.9	27.3
		S/T	1.00	0.74	0.60	0.5	1.00	0.74	0.61	0.5	1.00	0.77	0.63	0.5	1.00	0.79	0.65	0.5	1.00	1.00	0.67	0.5	1.00	1.00	0.73	0.6
		ΔT	26.68	24.96	21.76	18.4	26.63	24.92	21.71	18.4	26.87	25.16	21.95	18.6	26.61	24.90	21.70	18.4	26.38	24.67	21.47	18.2	27.46	25.74	22.54	19.2
		kW	1.97	1.97	1.97	2.0	2.22	2.22	2.22	2.2	2.50	2.50	2.49	2.5	2.80	2.80	2.79	2.8	3.14	3.14	3.13	3.2	3.53	3.53	3.53	3.5
		Amps	7.45	7.44	7.43	7.5	8.54	8.53	8.51	8.6	9.74	9.74	9.72	9.8	11.05	11.04	11.03	11.1	12.51	12.51	12.49	12.6	14.23	14.22	14.20	14.3
		Hi PR	256	257	259	263.5	297	298	300	304.0	339	340	342	346.4	385	386	388	392.0	434	435	437	441.3	486	488	489	493.8
		Lo PR	124	125	128	133.6	131	133	136	141.2	138	139	143	147.8	143	145	148	153.4	149	150	154	158.9	156	157	160	165.7
	980	MBh	30.7	31.1	32.0	33.4	30.4	30.8	31.7	33.1	29.6	30.1	31.0	32.3	28.3	28.7	**29.6**	31.0	26.6	27.0	27.9	29.3	25.1	25.5	26.4	27.8
		S/T	1.00	0.83	0.70	0.6	1.00	0.84	0.71	0.6	1.00	0.86	0.73	0.6	1.00	1.00	**0.75**	0.6	1.00	1.00	0.77	0.6	1.00	1.00	0.82	0.7
		ΔT	25.07	23.36	20.15	16.8	25.02	23.31	20.11	16.8	25.26	23.55	20.35	17.0	25.01	23.29	**20.09**	16.8	24.78	23.06	19.86	16.5	25.85	24.14	20.93	17.6
		kW	1.99	1.99	1.99	2.0	2.24	2.24	2.24	2.3	2.52	2.52	2.51	2.5	2.82	2.82	**2.81**	2.8	3.16	3.16	3.15	3.2	3.55	3.55	3.55	3.6
		Amps	7.54	7.53	7.51	7.6	8.62	8.61	8.60	8.7	9.83	9.82	9.80	9.9	11.14	11.13	**11.11**	11.2	12.60	12.59	12.57	12.7	14.32	14.31	14.29	14.4
		Hi PR	259	260	262	266.8	300	301	303	307.2	342	343	345	349.7	388	389	**391**	395.3	437	438	440	444.5	490	491	493	497.1
		Lo PR	126	128	131	136.3	134	135	139	143.8	140	142	145	150.4	146	148	**151**	156.0	152	153	156	161.5	158	160	163	168.4
	1200	MBh	31.6	32.0	32.9	34.3	31.3	31.8	32.7	34.0	30.5	31.0	31.9	33.2	29.2	29.6	30.5	31.9	27.5	28.0	28.9	30.2	26.0	26.5	27.4	28.7
		S/T	1.00	0.88	0.74	0.6	1.00	0.88	0.75	0.6	1.00	1.00	0.78	0.6	1.00	1.00	0.79	0.7	1.00	1.00	0.82	0.7	1.00	1.00	0.87	0.7
		ΔT	23.58	21.86	18.66	15.3	23.53	21.82	18.61	15.3	23.77	22.06	18.86	15.5	23.51	21.80	18.60	15.3	23.28	21.57	18.37	15.1	24.36	22.64	19.44	16.1
		kW	2.01	2.01	2.01	2.0	2.26	2.26	2.25	2.3	2.54	2.54	2.53	2.6	2.84	2.84	2.83	2.9	3.18	3.17	3.17	3.2	3.57	3.57	3.56	3.6
		Amps	7.62	7.61	7.59	7.7	8.70	8.69	8.68	8.8	9.91	9.90	9.89	10.0	11.22	11.21	11.19	11.3	12.68	12.67	12.65	12.7	14.40	14.39	14.37	14.5
		Hi PR	263	264	266	270.6	304	305	307	311.1	346	347	349	353.5	392	393	395	399.1	441	442	444	448.4	494	495	496	500.9
		Lo PR	130	132	135	140.1	138	139	142	147.6	144	146	149	154.3	150	151	155	159.8	155	157	160	165.3	162	164	167	172.2
85	800	MBh	30.6	31.1	32.0	33.3	30.4	30.8	31.7	33.1	29.6	30.0	30.9	32.3	28.2	28.6	29.5	30.9	26.6	27.0	27.9	29.3	25.1	25.5	26.4	27.8
		S/T	1.00	0.84	0.70	0.6	1.00	0.84	0.71	0.6	1.00	1.00	0.73	0.6	1.00	1.00	0.75	0.6	1.00	1.00	0.77	0.6	1.00	1.00	1.00	0.7
		ΔT	30.04	28.33	25.13	21.8	30.00	28.28	25.08	21.8	30.24	28.52	25.32	22.0	29.98	28.26	25.06	21.7	29.75	28.03	24.83	21.5	30.82	29.11	25.91	22.6
		kW	1.98	1.98	1.97	2.0	2.23	2.22	2.22	2.2	2.50	2.50	2.50	2.5	2.81	2.80	2.80	2.8	3.14	3.14	3.14	3.2	3.54	3.53	3.53	3.5
		Amps	7.47	7.46	7.45	7.5	8.56	8.55	8.53	8.6	9.77	9.76	9.74	9.8	11.07	11.06	11.05	11.1	12.53	12.53	12.51	12.6	14.25	14.24	14.22	14.3
		Hi PR	257	258	260	264.7	298	299	301	305.2	340	341	343	347.6	386	387	389	393.2	435	436	438	442.5	488	489	491	495.0
		Lo PR	126	127	130	135.5	133	135	138	143.0	140	141	144	149.6	145	147	150	155.2	151	152	155	160.7	158	159	162	167.6
	980	MBh	31.2	31.6	32.5	33.9	30.9	31.3	32.2	33.6	30.1	30.6	31.5	32.8	28.8	29.2	30.1	31.5	27.1	27.6	28.5	29.8	25.6	26.0	26.9	28.3
		S/T	1.00	0.93	0.80	0.7	1.00	1.00	0.81	0.7	1.00	1.00	0.83	0.7	1.00	1.00	0.85	0.7	1.00	1.00	0.87	0.7	1.00	1.00	1.00	0.8
		ΔT	28.44	26.72	23.52	20.2	28.39	26.68	23.47	20.2	28.63	26.92	23.71	20.4	28.37	26.66	23.46	20.1	28.14	26.43	23.23	19.9	29.22	27.50	24.30	21.0
		kW	2.00	2.00	1.99	2.0	2.25	2.25	2.24	2.3	2.53	2.52	2.52	2.5	2.83	2.82	2.82	2.8	3.16	3.16	3.16	3.2	3.56	3.55	3.55	3.6
		Amps	7.56	7.55	7.53	7.6	8.64	8.63	8.62	8.7	9.85	9.84	9.83	9.9	11.16	11.15	11.13	11.2	12.62	12.61	12.60	12.7	14.34	14.33	14.31	14.4
		Hi PR	261	262	264	268.0	301	302	304	308.5	343	345	346	350.9	389	390	392	396.5	438	439	441	445.8	491	492	494	498.3
		Lo PR	128	130	133	138.1	136	137	140	145.7	142	144	147	152.3	148	149	153	157.9	153	155	158	163.4	160	162	165	170.2
	1200	MBh	32.1	32.5	33.4	34.8	31.8	32.3	33.2	34.5	31.1	31.5	32.4	33.8	29.7	30.1	31.0	32.4	28.0	28.5	29.4	30.7	26.5	27.0	27.9	29.2
		S/T	1.00	0.98	0.84	0.7	1.00	1.00	0.85	0.7	1.00	1.00	0.88	0.7	1.00	1.00	0.89	0.8	1.00	1.00	1.00	0.8	1.00	1.00	1.00	0.8
		ΔT	26.94	25.23	22.03	18.7	26.90	25.18	21.98	18.7	27.14	25.42	22.22	18.9	26.88	25.16	21.96	18.6	26.65	24.94	21.73	18.4	27.72	26.01	22.81	19.5
		kW	2.02	2.01	2.01	2.0	2.27	2.26	2.26	2.3	2.54	2.54	2.54	2.6	2.84	2.84	2.84	2.9	3.18	3.18	3.17	3.2	3.57	3.57	3.57	3.6
		Amps	7.64	7.63	7.61	7.7	8.72	8.72	8.70	8.8	9.93	9.92	9.91	10.0	11.24	11.23	11.21	11.3	12.70	12.69	12.68	12.8	14.42	14.41	14.39	14.5
		Hi PR	264	266	267	271.8	305	306	308	312.3	347	348	350	354.7	393	394	396	400.4	442	443	445	449.6	495	496	498	502.1
		Lo PR	132	134	137	142.0	140	141	144	149.5	146	148	151	156.1	152	153	156	161.7	157	159	162	167.2	164	166	169	174.0

IDB: Entering Indoor Dry Bulb Temperature

Shaded area reflects AHRI conditions.

kW = Total system power

High and low pressures are measured at the liquid and suction access fittings.

Amps = outdoor unit amps (comp.+fan)

Design Subcooling 8 ±2 °F @ the liquid access fitting connection AHRI 95 test conditions. Design Superheat 15 ±2 °F @ the compressor suction access fitting connection.

			Outdoor Ambient Temperature																							
			65ºF				75ºF				85ºF				95ºF				105ºF				115ºF			
			Entering Indoor Wet Bulb Temperature																							
IDB	Airflow		59	63	67	71	59	63	67	71	59	63	67	71	59	63	67	71	59	63	67	71	59	63	67	71
70	700	MBh	26.3	26.6	27.4	-	26.0	26.4	27.2	-	25.3	25.7	26.5	-	24.2	24.5	25.3	-	22.7	23.1	23.9	-	21.4	21.8	22.6	-
		S/T	0.59	0.51	0.38	-	0.60	0.52	0.38	-	0.62	0.55	0.41	-	0.64	0.56	0.43	-	1.00	0.59	0.45	-	1.00	0.64	0.50	-
		ΔT	19.95	18.13	14.73	-	19.90	18.08	14.68	-	20.15	18.33	14.93	-	19.88	18.06	14.66	-	19.63	17.81	14.42	-	20.77	18.95	15.56	-
		kW	1.53	1.52	1.52	-	1.71	1.71	1.71	-	1.92	1.92	1.92	-	2.15	2.14	2.14	-	2.40	2.40	2.39	-	2.69	2.69	2.69	-
		Amps	5.66	5.66	5.64	-	6.48	6.47	6.46	-	7.38	7.37	7.36	-	8.36	8.35	8.34	-	9.45	9.45	9.43	-	10.74	10.73	10.72	-
		Hi PR	246	248	249	-	285	286	288	-	326	327	329	-	370	371	373	-	418	419	420	-	468	469	471	-
		Lo PR	122	123	126	-	129	131	134	-	136	137	140	-	141	143	146	-	146	148	151	-	153	155	158	-
	825	MBh	26.7	27.1	27.8	-	26.4	26.8	27.6	-	25.8	26.1	26.9	-	24.6	24.9	25.7	-	23.1	23.5	24.3	-	21.8	22.2	23.0	-
		S/T	0.67	0.59	0.45	-	0.67	0.60	0.46	-	0.70	0.62	0.49	-	1.00	0.64	0.51	-	1.00	0.66	0.53	-	1.00	0.71	0.58	-
		ΔT	18.58	16.76	13.36	-	18.53	16.71	13.31	-	18.79	16.97	13.57	-	18.51	16.69	13.29	-	18.27	16.45	13.05	-	19.41	17.59	14.19	-
		kW	1.54	1.54	1.53	-	1.72	1.72	1.72	-	1.93	1.93	1.93	-	2.16	2.16	2.15	-	2.41	2.41	2.40	-	2.70	2.70	2.70	-
		Amps	5.72	5.71	5.70	-	6.53	6.52	6.51	-	7.43	7.43	7.41	-	8.41	8.41	8.39	-	9.51	9.50	9.49	-	10.79	10.78	10.77	-
		Hi PR	249	250	252	-	288	289	291	-	329	330	332	-	373	374	376	-	420	421	423	-	471	472	474	-
		Lo PR	124	125	128	-	131	133	136	-	138	139	142	-	143	145	148	-	149	150	153	-	155	157	160	-
	1000	MBh	27.4	27.8	28.6	-	27.2	27.6	28.4	-	26.5	26.9	27.7	-	25.3	25.7	26.5	-	23.9	24.3	25.0	-	22.6	22.9	23.7	-
		S/T	0.71	0.63	0.50	-	0.72	0.64	0.50	-	0.74	0.67	0.53	-	1.00	0.69	0.55	-	1.00	0.71	0.57	-	1.00	0.76	0.62	-
		ΔT	17.08	15.26	11.86	-	17.03	15.21	11.81	-	17.28	15.46	12.06	-	17.01	15.19	11.79	-	16.76	14.94	11.55	-	17.90	16.08	12.68	-
		kW	1.55	1.55	1.55	-	1.74	1.74	1.73	-	1.95	1.94	1.94	-	2.17	2.17	2.17	-	2.42	2.42	2.42	-	2.72	2.72	2.71	-
		Amps	5.77	5.77	5.75	-	6.58	6.58	6.56	-	7.49	7.48	7.47	-	8.47	8.46	8.45	-	9.56	9.56	9.54	-	10.85	10.84	10.83	-
		Hi PR	253	254	255	-	291	293	294	-	332	333	335	-	376	377	379	-	424	425	426	-	474	475	477	-
		Lo PR	127	129	132	-	135	136	139	-	141	143	146	-	147	148	151	-	152	154	157	-	159	160	163	-
75	700	MBh	26.3	26.7	27.4	28.6	26.0	26.4	27.2	28.4	25.4	25.7	26.5	27.7	24.2	24.5	25.3	26.5	22.7	23.1	23.9	25.1	21.4	21.8	22.6	23.8
		S/T	0.72	0.64	0.51	0.4	0.73	0.65	0.51	0.4	1.00	0.67	0.54	0.4	1.00	0.69	0.56	0.4	1.00	0.72	0.58	0.4	1.00	1.00	0.63	0.5
		ΔT	23.95	22.13	18.73	15.2	23.90	22.08	18.68	15.2	24.15	22.33	18.94	15.4	23.88	22.06	18.66	15.1	23.64	21.82	18.42	14.9	24.78	22.96	19.56	16.0
		kW	1.52	1.52	1.52	1.5	1.71	1.71	1.71	1.7	1.92	1.92	1.91	1.9	2.14	2.14	2.14	2.2	2.40	2.39	2.39	2.4	2.69	2.69	2.69	2.7
		Amps	5.66	5.65	5.64	5.7	6.47	6.46	6.45	6.5	7.37	7.37	7.35	7.4	8.35	8.35	8.33	8.4	9.45	9.44	9.43	9.5	10.73	10.73	10.71	10.8
		Hi PR	247	248	249	253.8	286	287	288	292.8	326	328	329	333.6	370	371	373	377.5	418	419	421	424.9	468	469	471	475.5
		Lo PR	122	123	126	131.5	129	131	134	138.9	136	137	140	145.4	141	143	146	150.9	146	148	151	156.3	153	155	158	163.0
	825	MBh	26.7	27.1	27.9	29.1	26.5	26.8	27.6	28.8	25.8	26.1	26.9	28.1	24.6	**25.0**	25.7	26.9	23.1	23.5	24.3	25.5	21.8	22.2	23.0	24.2
		S/T	0.80	0.72	0.58	0.4	0.80	0.73	0.59	0.4	1.00	0.75	0.62	0.5	1.00	**0.77**	0.63	0.5	1.00	0.79	0.66	0.5	1.00	1.00	0.71	0.6
		ΔT	22.58	20.76	17.36	13.8	22.53	20.71	17.31	13.8	22.79	20.97	17.57	14.0	22.51	**20.69**	17.30	13.8	22.27	20.45	17.05	13.5	23.41	21.59	18.19	14.7
		kW	1.54	1.54	1.53	1.5	1.72	1.72	1.72	1.7	1.93	1.93	1.93	1.9	2.16	**2.16**	2.15	2.2	2.41	2.41	2.40	2.4	2.70	2.70	2.70	2.7
		Amps	5.71	5.71	5.69	5.8	6.52	6.52	6.50	6.6	7.43	7.42	7.41	7.5	8.41	**8.40**	8.39	8.4	9.50	9.49	9.48	9.5	10.78	10.78	10.76	10.8
		Hi PR	249	250	252	256.4	288	289	291	295.3	329	330	332	336.1	373	**374**	376	380.1	420	421	423	427.5	471	472	474	478.1
		Lo PR	124	125	128	133.6	131	133	136	141.0	138	139	142	147.5	143	**145**	148	153.0	149	150	153	158.4	155	157	160	165.2
	1000	MBh	27.4	27.8	28.6	29.8	27.2	27.6	28.4	29.6	26.5	26.9	27.7	28.9	25.3	25.7	26.5	27.7	23.9	24.3	25.1	26.3	22.6	22.9	23.7	24.9
		S/T	0.84	0.76	0.63	0.5	1.00	0.77	0.63	0.5	1.00	0.80	0.66	0.5	1.00	0.81	0.68	0.5	1.00	0.84	0.70	0.6	1.00	1.00	0.75	0.6
		ΔT	21.08	19.26	15.86	12.3	21.03	19.21	15.81	12.3	21.28	19.46	16.06	12.5	21.01	19.19	15.79	12.3	20.77	18.95	15.55	12.0	21.91	20.09	16.69	13.2
		kW	1.55	1.55	1.55	1.6	1.74	1.74	1.73	1.7	1.94	1.94	1.94	2.0	2.17	2.17	2.17	2.2	2.42	2.42	2.42	2.4	2.72	2.72	2.71	2.7
		Amps	5.77	5.76	5.75	5.8	6.58	6.57	6.56	6.6	7.48	7.48	7.46	7.5	8.46	8.46	8.44	8.5	9.56	9.55	9.54	9.6	10.84	10.83	10.82	10.9
		Hi PR	253	254	256	259.8	292	293	294	298.8	333	334	335	339.6	376	378	379	383.6	424	425	427	431.0	474	476	477	481.5
		Lo PR	127	129	132	137.2	135	136	139	144.6	141	143	146	151.1	147	148	151	156.6	152	154	157	162.0	159	160	164	168.7

IDB: Entering Indoor Dry Bulb Temperature

Shaded area reflects ACCA (TVA) conditions.

kW = Total system power

High and low pressures are measured at the liquid and suction access fittings.

Amps = outdoor unit amps (comp.+fan)

Design Subcooling 8 ±2 °F @ the liquid access fitting connection AHRI 95 test conditions. Design Superheat 15 ±2 °F @ the compressor suction access fitting connection.

Expanded Cooling Data — DP5HM3631 (High Stage) (Cont.)

			Outdoor Ambient Temperature																							
			65ºF				75ºF				85ºF				95ºF				105ºF				115ºF			
			Entering Indoor Wet Bulb Temperature																							
IDB	Airflow		59	63	67	71	59	63	67	71	59	63	67	71	59	63	67	71	59	63	67	71	59	63	67	71
80	700	MBh	26.4	26.8	27.6	28.8	26.2	26.6	27.3	28.5	25.5	25.9	26.7	27.9	24.3	24.7	25.5	26.7	22.9	23.2	24.0	25.2	21.5	21.9	22.7	23.9
		S/T	0.84	0.77	0.63	0.5	1.00	0.77	0.64	0.5	1.00	0.80	0.66	0.5	1.00	0.82	0.68	0.5	1.00	1.00	0.71	0.6	1.00	1.00	0.76	0.6
		ΔT	27.98	26.16	22.76	19.2	27.93	26.11	22.71	19.2	28.18	26.36	22.96	19.4	27.91	26.09	22.69	19.2	27.67	25.85	22.45	18.9	28.80	26.98	23.59	20.1
		kW	1.53	1.52	1.52	1.5	1.71	1.71	1.71	1.7	1.92	1.92	1.92	1.9	2.15	2.14	2.14	2.2	2.40	2.40	2.39	2.4	2.69	2.69	2.69	2.7
		Amps	5.66	5.66	5.64	5.7	6.47	6.47	6.45	6.5	7.38	7.37	7.36	7.4	8.36	8.35	8.34	8.4	9.45	9.45	9.43	9.5	10.74	10.73	10.72	10.8
		Hi PR	247	248	250	254.2	286	287	289	293.2	327	328	330	334.0	371	372	374	378.0	418	419	421	425.4	469	470	472	476.0
		Lo PR	122	124	127	132.0	130	131	134	139.4	136	138	141	145.9	142	143	146	151.4	147	149	152	156.8	154	155	158	163.6
	825	MBh	26.8	27.2	28.0	29.2	26.6	27.0	27.8	29.0	25.9	26.3	27.1	28.3	24.7	25.1	**25.9**	27.1	23.3	23.7	24.4	25.6	22.0	22.3	23.1	24.3
		S/T	1.00	0.85	0.71	0.6	1.00	0.85	0.72	0.6	1.00	0.88	0.74	0.6	1.00	0.90	**0.76**	0.6	1.00	1.00	0.78	0.6	1.00	1.00	0.83	0.7
		ΔT	26.61	24.79	21.39	17.9	26.56	24.74	21.34	17.8	26.82	25.00	21.60	18.1	26.54	24.72	**21.33**	17.8	26.30	24.48	21.08	17.6	27.44	25.62	22.22	18.7
		kW	1.54	1.54	1.53	1.5	1.72	1.72	1.72	1.7	1.93	1.93	1.93	1.9	2.16	2.16	**2.15**	2.2	2.41	2.41	2.40	2.4	2.70	2.70	2.70	2.7
		Amps	5.72	5.71	5.70	5.8	6.53	6.52	6.51	6.6	7.43	7.42	7.41	7.5	8.41	8.40	**8.39**	8.5	9.50	9.50	9.48	9.5	10.79	10.78	10.77	10.8
		Hi PR	250	251	253	256.8	289	290	291	295.8	329	331	332	336.6	373	375	**376**	380.5	421	422	424	427.9	471	472	474	478.5
		Lo PR	124	126	129	134.2	132	133	136	141.6	138	140	143	148.1	144	145	**148**	153.6	149	151	154	159.0	156	157	161	165.7
	1000	MBh	27.6	28.0	28.7	29.9	27.3	27.7	28.5	29.7	26.7	27.0	27.8	29.0	25.5	25.9	26.6	27.8	24.0	24.4	25.2	26.4	22.7	23.1	23.9	25.1
		S/T	1.00	0.89	0.75	0.6	1.00	0.90	0.76	0.6	1.00	0.92	0.78	0.6	1.00	1.00	0.80	0.7	1.00	1.00	0.83	0.7	1.00	1.00	0.88	0.7
		ΔT	25.11	23.29	19.89	16.4	25.06	23.24	19.84	16.3	25.31	23.49	20.09	16.6	25.04	23.22	19.82	16.3	24.79	22.97	19.58	16.1	25.93	24.11	20.72	17.2
		kW	1.55	1.55	1.55	1.6	1.74	1.74	1.73	1.7	1.95	1.94	1.94	2.0	2.17	2.17	2.17	2.2	2.42	2.42	2.42	2.4	2.72	2.72	2.71	2.7
		Amps	5.77	5.77	5.75	5.8	6.58	6.58	6.56	6.6	7.49	7.48	7.47	7.5	8.47	8.46	8.45	8.5	9.56	9.56	9.54	9.6	10.85	10.84	10.83	10.9
		Hi PR	253	254	256	260.3	292	293	295	299.3	333	334	336	340.1	377	378	380	384.0	424	425	427	431.4	475	476	478	482.0
		Lo PR	128	129	132	137.7	135	137	140	145.1	142	143	146	151.6	147	149	152	157.1	153	154	157	162.5	159	161	164	169.3
85	700	MBh	26.9	27.2	28.0	29.2	26.6	27.0	27.8	29.0	25.9	26.3	27.1	28.3	24.8	25.1	25.9	27.1	23.3	23.7	24.5	25.7	22.0	22.4	23.1	24.4
		S/T	1.00	0.87	0.73	0.6	1.00	0.88	0.74	0.6	1.00	1.00	0.77	0.6	1.00	1.00	0.78	0.6	1.00	1.00	0.81	0.7	1.00	1.00	1.00	0.7
		ΔT	31.55	29.73	26.33	22.8	31.50	29.68	26.28	22.8	31.76	29.94	26.54	23.0	31.48	29.66	26.26	22.7	31.24	29.42	26.02	22.5	32.38	30.56	27.16	23.6
		kW	1.53	1.53	1.52	1.5	1.72	1.71	1.71	1.7	1.92	1.92	1.92	1.9	2.15	2.15	2.14	2.2	2.40	2.40	2.40	2.4	2.70	2.69	2.69	2.7
		Amps	5.68	5.67	5.66	5.7	6.49	6.48	6.47	6.5	7.39	7.39	7.37	7.4	8.37	8.37	8.35	8.4	9.47	9.46	9.45	9.5	10.75	10.74	10.73	10.8
		Hi PR	248	249	251	255.4	287	288	290	294.4	328	329	331	335.2	372	373	375	379.1	419	420	422	426.5	470	471	473	477.1
		Lo PR	124	126	129	133.8	131	133	136	141.3	138	139	143	147.8	143	145	148	153.2	149	150	153	158.6	156	157	160	165.4
	825	MBh	27.3	27.6	28.4	29.6	27.0	27.4	28.2	29.4	26.4	26.7	27.5	28.7	25.2	25.5	26.3	27.5	23.7	24.1	24.9	26.1	22.4	22.8	23.6	24.8
		S/T	1.00	0.95	0.81	0.7	1.00	0.95	0.82	0.7	1.00	1.00	0.84	0.7	1.00	1.00	0.86	0.7	1.00	1.00	0.88	0.7	1.00	1.00	1.00	0.8
		ΔT	30.19	28.37	24.97	21.4	30.14	28.32	24.92	21.4	30.39	28.57	25.17	21.7	30.12	28.30	24.90	21.4	29.87	28.05	24.66	21.1	31.01	29.19	25.80	22.3
		kW	1.54	1.54	1.54	1.6	1.73	1.73	1.72	1.7	1.94	1.93	1.93	1.9	2.16	2.16	2.16	2.2	2.41	2.41	2.41	2.4	2.71	2.71	2.70	2.7
		Amps	5.73	5.73	5.71	5.8	6.54	6.54	6.52	6.6	7.45	7.44	7.43	7.5	8.43	8.42	8.41	8.5	9.52	9.51	9.50	9.6	10.80	10.80	10.78	10.8
		Hi PR	251	252	254	258.0	290	291	293	296.9	331	332	333	337.8	375	376	377	381.7	422	423	425	429.1	473	474	475	479.7
		Lo PR	126	128	131	136.0	134	135	138	143.4	140	142	145	149.9	146	147	150	155.4	151	153	156	160.8	158	159	162	167.6
	1000	MBh	28.0	28.4	29.2	30.4	27.8	28.2	29.0	30.2	27.1	27.5	28.3	29.5	25.9	26.3	27.1	28.3	24.5	24.8	25.6	26.8	23.2	23.5	24.3	25.5
		S/T	1.00	0.99	0.85	0.7	1.00	1.00	0.86	0.7	1.00	1.00	0.89	0.7	1.00	1.00	0.91	0.8	1.00	1.00	1.00	0.8	1.00	1.00	1.00	0.8
		ΔT	28.68	26.86	23.46	19.9	28.63	26.81	23.41	19.9	28.89	27.07	23.67	20.1	28.61	26.79	23.39	19.9	28.37	26.55	23.15	19.6	29.51	27.69	24.29	20.8
		kW	1.55	1.55	1.55	1.6	1.74	1.74	1.74	1.8	1.95	1.95	1.94	2.0	2.17	2.17	2.17	2.2	2.43	2.42	2.42	2.4	2.72	2.72	2.72	2.7
		Amps	5.79	5.78	5.77	5.8	6.60	6.59	6.58	6.6	7.50	7.50	7.48	7.5	8.48	8.48	8.46	8.5	9.58	9.57	9.56	9.6	10.86	10.85	10.84	10.9
		Hi PR	254	255	257	261.5	293	294	296	300.4	334	335	337	341.2	378	379	381	385.2	425	427	428	432.6	476	477	479	483.2
		Lo PR	130	131	134	139.5	137	139	142	146.9	144	145	148	153.4	149	151	154	158.9	155	156	159	164.3	161	163	166	171.1

IDB: Entering Indoor Dry Bulb Temperature

Shaded area reflects AHRI conditions.

kW = Total system power

High and low pressures are measured at the liquid and suction access fittings.

Amps = outdoor unit amps (comp.+fan)

Design Subcooling 8 ±2 °F @ the liquid access fitting connection AHRI 95 test conditions. Design Superheat 15 ±2 °F @ the compressor suction access fitting connection.

Expanded Cooling Data — DP5HM3631 (Low Stage)

			Outdoor Ambient Temperature																							
			65ºF				75ºF				85ºF				95ºF				105ºF				115ºF			
			Entering Indoor Wet Bulb Temperature																							
IDB	Airflow		59	63	67	71	59	63	67	71	59	63	67	71	59	63	67	71	59	63	67	71	59	63	67	71
70	1000	MBh	36.5	37.0	38.1	-	36.2	36.7	37.8	-	35.2	35.7	36.8	-	33.6	34.1	35.2	-	31.5	32.1	33.2	-	29.7	30.2	31.3	-
		S/T	0.56	0.49	0.36	-	0.57	0.50	0.36	-	0.59	0.52	0.39	-	0.61	0.54	0.41	-	0.64	0.56	0.43	-	1.00	0.61	0.48	-
		ΔT	20.83	18.95	15.42	-	20.78	18.89	15.37	-	21.05	19.16	15.64	-	20.76	18.88	15.35	-	20.51	18.62	15.10	-	21.69	19.80	16.28	-
		kW	2.42	2.42	2.42	-	2.72	2.72	2.71	-	3.05	3.05	3.04	-	3.41	3.41	3.40	-	3.81	3.81	3.80	-	4.28	4.28	4.27	-
		Amps	9.00	8.99	8.96	-	10.28	10.27	10.25	-	11.72	11.71	11.69	-	13.28	13.27	13.25	-	15.02	15.01	14.99	-	17.06	17.05	17.03	-
		Hi PR	258	259	260	-	298	299	301	-	341	342	344	-	387	388	390	-	437	438	439	-	489	491	492	-
		Lo PR	118	120	123	-	125	127	130	-	132	133	136	-	137	138	141	-	142	144	147	-	149	150	153	-
	1200	MBh	37.1	37.6	38.7	-	36.8	37.3	38.4	-	35.8	36.3	37.4	-	34.2	34.7	35.8	-	32.2	32.7	33.8	-	30.3	30.8	31.9	-
		S/T	0.65	0.57	0.44	-	0.66	0.58	0.45	-	0.68	0.61	0.47	-	0.70	0.62	0.49	-	1.00	0.65	0.51	-	1.00	0.70	0.56	-
		ΔT	19.26	17.37	13.85	-	19.20	17.32	13.80	-	19.47	17.58	14.06	-	19.18	17.30	13.78	-	18.93	17.05	13.52	-	20.11	18.23	14.71	-
		kW	2.45	2.44	2.44	-	2.74	2.74	2.73	-	3.07	3.07	3.07	-	3.43	3.43	3.42	-	3.83	3.83	3.82	-	4.30	4.30	4.29	-
		Amps	9.09	9.08	9.06	-	10.38	10.37	10.35	-	11.82	11.81	11.78	-	13.37	13.36	13.34	-	15.11	15.10	15.08	-	17.15	17.14	17.12	-
		Hi PR	260	262	263	-	301	302	304	-	344	345	347	-	390	391	393	-	439	441	442	-	492	494	495	-
		Lo PR	120	122	125	-	128	129	132	-	134	135	138	-	139	141	144	-	145	146	149	-	151	153	156	-
	1400	MBh	37.9	38.4	39.5	-	37.6	38.1	39.2	-	36.6	37.1	38.2	-	35.0	35.5	36.6	-	33.0	33.5	34.6	-	31.1	31.6	32.7	-
		S/T	0.69	0.61	0.48	-	0.69	0.62	0.49	-	0.72	0.64	0.51	-	0.74	0.66	0.53	-	1.00	0.68	0.55	-	1.00	0.74	0.60	-
		ΔT	18.00	16.12	12.60	-	17.95	16.07	12.54	-	18.22	16.33	12.81	-	17.93	16.05	12.52	-	17.68	15.79	12.27	-	18.86	16.97	13.45	-
		kW	2.46	2.46	2.45	-	2.76	2.76	2.75	-	3.09	3.09	3.08	-	3.45	3.45	3.44	-	3.85	3.85	3.84	-	4.32	4.31	4.31	-
		Amps	9.16	9.15	9.13	-	10.45	10.44	10.42	-	11.89	11.88	11.86	-	13.45	13.44	13.41	-	15.19	15.18	15.15	-	17.23	17.22	17.19	-
		Hi PR	263	264	266	-	304	305	307	-	347	348	350	-	393	394	396	-	442	443	445	-	495	496	498	-
		Lo PR	123	125	128	-	130	132	135	-	137	138	141	-	142	143	146	-	147	149	152	-	154	155	158	-
75	1000	MBh	36.5	37.0	38.1	39.8	36.2	36.7	37.8	39.5	35.2	35.7	36.8	38.5	33.6	34.1	35.2	36.9	31.6	32.1	33.2	34.8	29.7	30.2	31.3	33.0
		S/T	0.69	0.62	0.48	0.3	0.70	0.62	0.49	0.4	0.72	0.65	0.51	0.4	1.00	0.67	0.53	0.4	1.00	0.69	0.55	0.4	1.00	0.74	0.61	0.5
		ΔT	24.98	23.09	19.57	15.9	24.93	23.04	19.52	15.9	25.19	23.31	19.79	16.1	24.91	23.02	19.50	15.9	24.66	22.77	19.25	15.6	25.84	23.95	20.43	16.8
		kW	2.42	2.42	2.41	2.4	2.72	2.72	2.71	2.7	3.05	3.05	3.04	3.1	3.41	3.41	3.40	3.4	3.81	3.81	3.80	3.8	4.28	4.27	4.27	4.3
		Amps	8.99	8.98	8.96	9.1	10.28	10.27	10.24	10.3	11.72	11.70	11.68	11.8	13.27	13.26	13.24	13.3	15.01	15.00	14.98	15.1	17.05	17.04	17.02	17.1
		Hi PR	258	259	261	265.2	299	300	301	305.9	341	342	344	348.6	387	388	390	394.6	437	438	440	444.2	490	491	493	497.1
		Lo PR	118	120	123	127.7	125	127	130	134.9	132	133	136	141.2	137	138	142	146.6	142	144	147	151.8	149	150	153	158.4
	1200	MBh	37.1	37.6	38.7	40.4	36.8	37.3	38.4	40.1	35.8	36.4	37.5	39.1	34.2	**34.7**	35.8	37.5	32.2	32.7	33.8	35.5	30.4	30.9	32.0	33.6
		S/T	0.77	0.70	0.57	0.4	0.78	0.71	0.57	0.4	1.00	0.73	0.60	0.5	1.00	**0.75**	0.62	0.5	1.00	0.77	0.64	0.5	1.00	0.82	0.69	0.6
		ΔT	23.40	21.52	17.99	14.3	23.35	21.46	17.94	14.3	23.62	21.73	18.21	14.6	23.33	**21.45**	17.92	14.3	23.08	21.19	17.67	14.0	24.26	22.37	18.85	15.2
		kW	2.44	2.44	2.44	2.5	2.74	2.74	2.73	2.8	3.07	3.07	3.06	3.1	3.43	**3.43**	3.42	3.4	3.83	3.83	3.82	3.8	4.30	4.30	4.29	4.3
		Amps	9.08	9.07	9.05	9.1	10.37	10.36	10.34	10.4	11.81	11.80	11.78	11.9	13.36	**13.35**	13.33	13.4	15.10	15.09	15.07	15.2	17.14	17.13	17.11	17.2
		Hi PR	261	262	264	268.2	301	303	304	308.9	344	345	347	351.6	390	**391**	393	397.6	440	441	443	447.2	493	494	496	500.1
		Lo PR	120	122	125	130.0	128	129	132	137.2	134	135	138	143.5	139	**141**	144	148.9	145	146	149	154.1	151	153	156	160.7
	1400	MBh	37.9	38.4	39.5	41.2	37.6	38.1	39.2	40.9	36.6	37.2	38.3	39.9	35.0	35.5	36.6	38.3	33.0	33.5	34.6	36.3	31.1	31.7	32.8	34.4
		S/T	0.81	0.74	0.61	0.5	0.82	0.75	0.61	0.5	1.00	0.77	0.64	0.5	1.00	0.79	0.66	0.5	1.00	0.81	0.68	0.5	1.00	1.00	0.73	0.6
		ΔT	22.15	20.26	16.74	13.1	22.10	20.21	16.69	13.0	22.36	20.48	16.96	13.3	22.08	20.19	16.67	13.0	21.83	19.94	16.42	12.8	23.01	21.12	17.60	14.0
		kW	2.46	2.46	2.45	2.5	2.76	2.75	2.75	2.8	3.09	3.09	3.08	3.1	3.45	3.44	3.44	3.5	3.85	3.84	3.84	3.9	4.31	4.31	4.31	4.3
		Amps	9.15	9.14	9.12	9.2	10.44	10.43	10.41	10.5	11.88	11.87	11.85	11.9	13.44	13.43	13.41	13.5	15.18	15.17	15.14	15.2	17.22	17.21	17.19	17.3
		Hi PR	264	265	266	271.0	304	305	307	311.8	347	348	350	354.5	393	394	396	400.4	443	444	446	450.0	495	497	498	502.9
		Lo PR	123	125	128	132.6	130	132	135	139.8	137	138	141	146.2	142	143	146	151.5	147	149	152	156.8	154	155	158	163.3

IDB: Entering Indoor Dry Bulb Temperature

Shaded area reflects ACCA (TVA) conditions.

kW = Total system power

High and low pressures are measured at the liquid and suction access fittings.

Amps = outdoor unit amps (comp.+fan)

Design Subcooling 8 ±2 °F @ the liquid access fitting connection AHRI 95 test conditions. Design Superheat 15 ±2 °F @ the compressor suction access fitting connection.

			OUTDOOR AMBIENT TEMPERATURE																							
			65ºF				75ºF				85ºF				95ºF				105ºF				115ºF			
			ENTERING INDOOR WET BULB TEMPERATURE																							
IDB	AIRFLOW		59	63	67	71	59	63	67	71	59	63	67	71	59	63	67	71	59	63	67	71	59	63	67	71
80	1000	MBh	36.7	37.2	38.3	40.0	36.4	36.9	38.0	39.6	35.4	35.9	37.0	38.7	33.8	34.3	35.4	37.0	31.8	32.3	33.4	35.0	29.9	30.4	31.5	33.2
		S/T	0.81	0.74	0.61	0.5	1.00	0.74	0.61	0.5	1.00	0.77	0.64	0.5	1.00	0.79	0.66	0.5	1.00	0.81	0.68	0.5	1.00	1.00	0.73	0.6
		ΔT	29.15	27.27	23.75	20.1	29.10	27.22	23.70	20.0	29.37	27.48	23.96	20.3	29.08	27.20	23.68	20.0	28.83	26.95	23.42	19.8	30.01	28.13	24.61	21.0
		kW	2.42	2.42	2.42	2.4	2.72	2.72	2.71	2.7	3.05	3.05	3.04	3.1	3.41	3.41	3.40	3.4	3.81	3.81	3.80	3.8	4.28	4.28	4.27	4.3
		Amps	8.99	8.98	8.96	9.1	10.28	10.27	10.25	10.3	11.72	11.71	11.69	11.8	13.28	13.27	13.25	13.3	15.02	15.01	14.99	15.1	17.06	17.05	17.03	17.1
		Hi PR	258	259	261	265.7	299	300	302	306.4	342	343	345	349.1	388	389	391	395.1	437	438	440	444.7	490	491	493	497.6
		Lo PR	119	120	123	128.2	126	127	130	135.4	132	134	137	141.7	138	139	142	147.1	143	144	147	152.3	149	151	154	158.9
	1200	MBh	37.3	37.8	38.9	40.6	37.0	37.5	38.6	40.3	36.0	36.6	37.6	39.3	34.4	34.9	**36.0**	37.7	32.4	32.9	34.0	35.7	30.5	31.1	32.2	33.8
		S/T	0.90	0.82	0.69	0.6	1.00	0.83	0.70	0.6	1.00	0.85	0.72	0.6	1.00	0.87	**0.74**	0.6	1.00	1.00	0.76	0.6	1.00	1.00	0.81	0.7
		ΔT	27.58	25.69	22.17	18.5	27.53	25.64	22.12	18.5	27.79	25.90	22.38	18.7	27.51	25.62	**22.10**	18.5	27.25	25.37	21.85	18.2	28.44	26.55	23.03	19.4
		kW	2.45	2.44	2.44	2.5	2.74	2.74	2.73	2.8	3.07	3.07	3.06	3.1	3.43	3.43	**3.42**	3.4	3.83	3.83	3.82	3.8	4.30	4.30	4.29	4.3
		Amps	9.09	9.08	9.06	9.2	10.38	10.37	10.34	10.4	11.81	11.80	11.78	11.9	13.37	13.36	**13.34**	13.4	15.11	15.10	15.08	15.2	17.15	17.14	17.12	17.2
		Hi PR	261	262	264	268.6	302	303	305	309.4	345	346	348	352.1	391	392	**394**	398.1	440	441	443	447.6	493	494	496	500.5
		Lo PR	121	122	125	130.5	128	130	133	137.7	135	136	139	144.1	140	141	**144**	149.4	145	147	150	154.6	152	153	156	161.2
	1400	MBh	38.1	38.6	39.7	41.4	37.8	38.3	39.4	41.1	36.8	37.3	38.4	40.1	35.2	35.7	36.8	38.5	33.2	33.7	34.8	36.5	31.3	31.9	32.9	34.6
		S/T	1.00	0.86	0.73	0.6	1.00	0.87	0.74	0.6	1.00	0.89	0.76	0.6	1.00	0.91	0.78	0.6	1.00	1.00	0.80	0.7	1.00	1.00	0.85	0.7
		ΔT	26.33	24.44	20.92	17.3	26.27	24.39	20.87	17.2	26.54	24.65	21.13	17.5	26.25	24.37	20.85	17.2	26.00	24.12	20.59	16.9	27.18	25.30	21.78	18.1
		kW	2.46	2.46	2.45	2.5	2.76	2.76	2.75	2.8	3.09	3.09	3.08	3.1	3.45	3.44	3.44	3.5	3.85	3.84	3.84	3.9	4.32	4.31	4.31	4.3
		Amps	9.16	9.15	9.13	9.2	10.45	10.44	10.42	10.5	11.89	11.88	11.86	12.0	13.44	13.43	13.41	13.5	15.18	15.17	15.15	15.2	17.22	17.21	17.19	17.3
		Hi PR	264	265	267	271.5	305	306	308	312.2	347	349	350	354.9	393	395	396	400.9	443	444	446	450.5	496	497	499	503.4
		Lo PR	124	125	128	133.1	131	132	135	140.4	137	139	142	146.7	142	144	147	152.0	148	149	152	157.3	154	156	159	163.8
85	1000	MBh	37.3	37.8	38.9	40.6	37.0	37.5	38.6	40.3	36.0	36.5	37.6	39.3	34.4	34.9	36.0	37.7	32.4	32.9	34.0	35.7	30.5	31.1	32.1	33.8
		S/T	1.00	0.84	0.70	0.6	1.00	0.84	0.71	0.6	1.00	0.87	0.74	0.6	1.00	1.00	0.75	0.6	1.00	1.00	0.78	0.6	1.00	1.00	0.83	0.7
		ΔT	32.86	30.97	27.45	23.8	32.81	30.92	27.40	23.8	33.07	31.19	27.66	24.0	32.79	30.90	27.38	23.7	32.54	30.65	27.13	23.5	33.72	31.83	28.31	24.7
		kW	2.43	2.43	2.42	2.4	2.73	2.72	2.72	2.7	3.06	3.05	3.05	3.1	3.41	3.41	3.41	3.4	3.81	3.81	3.81	3.8	4.28	4.28	4.28	4.3
		Amps	9.02	9.01	8.99	9.1	10.31	10.30	10.28	10.4	11.75	11.74	11.71	11.8	13.30	13.29	13.27	13.4	15.04	15.03	15.01	15.1	17.08	17.07	17.05	17.1
		Hi PR	259	261	262	266.9	300	301	303	307.6	343	344	346	350.3	389	390	392	396.3	438	440	441	445.9	491	492	494	498.8
		Lo PR	120	122	125	130.0	128	129	132	137.2	134	135	138	143.5	139	141	144	148.9	145	146	149	154.1	151	153	156	160.7
	1200	MBh	37.9	38.5	39.5	41.2	37.6	38.1	39.2	40.9	36.7	37.2	38.3	39.9	35.0	35.5	36.6	38.3	33.0	33.5	34.6	36.3	31.2	31.7	32.8	34.4
		S/T	1.00	0.92	0.79	0.7	1.00	0.93	0.80	0.7	1.00	1.00	0.82	0.7	1.00	1.00	0.84	0.7	1.00	1.00	0.86	0.7	1.00	1.00	0.91	0.8
		ΔT	31.28	29.39	25.87	22.2	31.23	29.34	25.82	22.2	31.49	29.61	26.09	22.4	31.21	29.32	25.80	22.2	30.96	29.07	25.55	21.9	32.14	30.25	26.73	23.1
		kW	2.45	2.45	2.44	2.5	2.75	2.74	2.74	2.8	3.08	3.08	3.07	3.1	3.44	3.43	3.43	3.5	3.84	3.83	3.83	3.9	4.31	4.30	4.30	4.3
		Amps	9.11	9.10	9.08	9.2	10.40	10.39	10.37	10.5	11.84	11.83	11.81	11.9	13.40	13.39	13.36	13.5	15.14	15.12	15.10	15.2	17.18	17.17	17.14	17.2
		Hi PR	262	264	265	269.8	303	304	306	310.6	346	347	349	353.3	392	393	395	399.3	441	443	444	448.9	494	495	497	501.8
		Lo PR	123	124	127	132.3	130	131	134	139.5	136	138	141	145.8	142	143	146	151.2	147	148	151	156.4	153	155	158	163.0
	1400	MBh	38.7	39.2	40.3	42.0	38.4	38.9	40.0	41.7	37.4	38.0	39.1	40.7	35.8	36.3	37.4	39.1	33.8	34.3	35.4	37.1	32.0	32.5	33.6	35.2
		S/T	1.00	0.96	0.83	0.7	1.00	0.97	0.83	0.7	1.00	1.00	0.86	0.7	1.00	1.00	0.88	0.7	1.00	1.00	0.90	0.8	1.00	1.00	1.00	0.8
		ΔT	30.03	28.14	24.62	21.0	29.98	28.09	24.57	20.9	30.24	28.36	24.83	21.2	29.96	28.07	24.55	20.9	29.71	27.82	24.30	20.6	30.89	29.00	25.48	21.8
		kW	2.47	2.47	2.46	2.5	2.76	2.76	2.76	2.8	3.09	3.09	3.09	3.1	3.45	3.45	3.45	3.5	3.85	3.85	3.85	3.9	4.32	4.32	4.31	4.3
		Amps	9.19	9.17	9.15	9.3	10.47	10.46	10.44	10.5	11.91	11.90	11.88	12.0	13.47	13.46	13.44	13.5	15.21	15.20	15.18	15.3	17.25	17.24	17.22	17.3
		Hi PR	265	266	268	272.7	306	307	309	313.4	349	350	352	356.1	395	396	398	402.1	444	445	447	451.7	497	498	500	504.6
		Lo PR	125	127	130	134.9	133	134	137	142.1	139	140	143	148.5	144	146	149	153.8	150	151	154	159.1	156	158	161	165.6

IDB: Entering Indoor Dry Bulb Temperature

Shaded area reflects AHRI conditions.

kW = Total system power

High and low pressures are measured at the liquid and suction access fittings.

Amps = outdoor unit amps (comp.+fan)

Design Subcooling 8 ±2 °F @ the liquid access fitting connection AHRI 95 test conditions. Design Superheat 15 ±2 °F @ the compressor suction access fitting connection.

Expanded Cooling Data — DP5HM4231 (High Stage)

			Outdoor Ambient Temperature																							
			65ºF				75ºF				85ºF				95ºF				105ºF				115ºF			
			Entering Indoor Wet Bulb Temperature																							
IDB	Airflow		59	63	67	71	59	63	67	71	59	63	67	71	59	63	67	71	59	63	67	71	59	63	67	71
70	800	MBh	30.5	30.9	31.9	-	30.2	30.7	31.6	-	29.4	29.9	30.8	-	28.1	28.5	29.4	-	26.4	26.8	27.7	-	24.8	25.3	26.2	-
		S/T	0.53	0.46	0.33	-	0.54	0.47	0.34	-	0.56	0.49	0.36	-	0.58	0.51	0.38	-	0.60	0.53	0.40	-	1.00	0.58	0.45	-
		ΔT	19.54	17.80	14.56	-	19.49	17.75	14.51	-	19.73	18.00	14.75	-	19.47	17.73	14.49	-	19.24	17.50	14.26	-	20.33	18.59	15.35	-
		kW	1.75	1.75	1.74	-	1.97	1.97	1.97	-	2.23	2.22	2.22	-	2.50	2.50	2.49	-	2.80	2.80	2.80	-	3.16	3.16	3.15	-
		Amps	6.68	6.67	6.65	-	7.66	7.65	7.63	-	8.75	8.74	8.73	-	9.93	9.93	9.91	-	11.25	11.25	11.23	-	12.81	12.80	12.78	-
		Hi PR	247	248	250	-	286	287	289	-	327	329	330	-	372	373	374	-	419	420	422	-	470	471	473	-
		Lo PR	116	118	121	-	124	125	128	-	130	131	134	-	135	136	139	-	140	142	145	-	147	148	151	-
	1000	MBh	31.1	31.6	32.5	-	30.9	31.3	32.2	-	30.0	30.5	31.4	-	28.7	29.1	30.0	-	27.0	27.4	28.3	-	25.4	25.9	26.8	-
		S/T	0.64	0.57	0.44	-	0.65	0.57	0.44	-	0.67	0.60	0.47	-	0.69	0.62	0.49	-	0.71	0.64	0.51	-	1.00	0.69	0.56	-
		ΔT	17.74	16.00	12.76	-	17.69	15.95	12.71	-	17.93	16.20	12.95	-	17.67	15.93	12.69	-	17.44	15.70	12.46	-	18.53	16.79	13.55	-
		kW	1.77	1.77	1.76	-	2.00	1.99	1.99	-	2.25	2.24	2.24	-	2.52	2.52	2.51	-	2.82	2.82	2.82	-	3.18	3.18	3.17	-
		Amps	6.76	6.76	6.74	-	7.74	7.74	7.72	-	8.84	8.83	8.81	-	10.02	10.01	10.00	-	11.34	11.33	11.32	-	12.89	12.88	12.87	-
		Hi PR	251	252	253	-	290	291	293	-	331	332	334	-	375	376	378	-	423	424	426	-	474	475	477	-
		Lo PR	119	121	124	-	126	128	131	-	132	134	137	-	138	139	142	-	143	144	147	-	149	151	154	-
	1200	MBh	31.9	32.4	33.3	-	31.7	32.1	33.0	-	30.9	31.3	32.2	-	29.5	29.9	30.8	-	27.8	28.2	29.2	-	26.3	26.7	27.6	-
		S/T	0.68	0.61	0.48	-	0.69	0.61	0.48	-	0.71	0.64	0.51	-	0.73	0.66	0.53	-	1.00	0.68	0.55	-	1.00	0.73	0.60	-
		ΔT	16.37	14.64	11.39	-	16.33	14.59	11.35	-	16.57	14.83	11.59	-	16.31	14.57	11.33	-	16.08	14.34	11.10	-	17.16	15.43	12.18	-
		kW	1.78	1.78	1.78	-	2.01	2.01	2.00	-	2.26	2.26	2.26	-	2.53	2.53	2.53	-	2.84	2.84	2.83	-	3.19	3.19	3.19	-
		Amps	6.83	6.82	6.81	-	7.81	7.80	7.79	-	8.90	8.90	8.88	-	10.09	10.08	10.06	-	11.41	11.40	11.38	-	12.96	12.95	12.93	-
		Hi PR	254	255	257	-	293	294	296	-	334	335	337	-	378	380	381	-	426	427	429	-	477	478	480	-
		Lo PR	122	124	127	-	129	131	134	-	136	137	140	-	141	142	145	-	146	148	151	-	153	154	157	-
75	800	MBh	30.5	31.0	31.9	33.3	30.3	30.7	31.6	33.0	29.5	29.9	30.8	32.2	28.1	28.5	29.4	30.8	26.4	26.8	27.7	29.1	24.8	25.3	26.2	27.6
		S/T	0.66	0.58	0.45	0.3	0.66	0.59	0.46	0.3	0.69	0.61	0.48	0.3	1.00	0.63	0.50	0.4	1.00	0.65	0.52	0.4	1.00	0.70	0.57	0.4
		ΔT	23.36	21.62	18.38	15.0	23.31	21.57	18.33	15.0	23.55	21.82	18.57	15.2	23.29	21.55	18.31	14.9	23.06	21.32	18.08	14.7	24.15	22.41	19.17	15.8
		kW	1.75	1.75	1.74	1.8	1.97	1.97	1.97	2.0	2.22	2.22	2.22	2.2	2.50	2.50	2.49	2.5	2.80	2.80	2.80	2.8	3.16	3.16	3.15	3.2
		Amps	6.67	6.66	6.65	6.7	7.65	7.64	7.63	7.7	8.74	8.74	8.72	8.8	9.93	9.92	9.90	10.0	11.25	11.24	11.22	11.3	12.80	12.79	12.77	12.8
		Hi PR	247	248	250	254.5	287	288	289	293.7	328	329	330	334.8	372	373	375	379.0	420	421	422	426.7	470	472	473	477.6
		Lo PR	116	118	121	125.8	124	125	128	133.0	130	131	134	139.2	135	137	140	144.5	140	142	145	149.7	147	148	151	156.2
	1000	MBh	31.1	31.6	32.5	33.9	30.9	31.3	32.2	33.6	30.1	30.5	31.4	32.8	28.7	**29.1**	30.0	31.4	27.0	27.4	28.4	29.8	25.5	25.9	26.8	28.2
		S/T	0.76	0.69	0.56	0.4	0.77	0.70	0.57	0.4	0.79	0.72	0.59	0.5	1.00	**0.74**	0.61	0.5	1.00	0.76	0.63	0.5	1.00	0.81	0.68	0.5
		ΔT	21.56	19.82	16.58	13.2	21.51	19.77	16.53	13.2	21.75	20.02	16.77	13.4	21.49	**19.75**	16.51	13.1	21.26	19.52	16.28	12.9	22.35	20.61	17.37	14.0
		kW	1.77	1.77	1.76	1.8	1.99	1.99	1.99	2.0	2.24	2.24	2.24	2.3	2.52	**2.52**	2.51	2.5	2.82	2.82	2.82	2.8	3.18	3.18	3.17	3.2
		Amps	6.76	6.75	6.73	6.8	7.74	7.73	7.71	7.8	8.83	8.82	8.81	8.9	10.01	**10.01**	9.99	10.1	11.34	11.33	11.31	11.4	12.89	12.88	12.86	12.9
		Hi PR	251	252	254	258.0	290	291	293	297.2	331	332	334	338.3	375	**376**	378	382.5	423	424	426	430.2	474	475	477	481.1
		Lo PR	119	121	124	128.5	126	128	131	135.7	133	134	137	141.9	138	**139**	142	147.2	143	144	147	152.4	149	151	154	158.9
	1200	MBh	32.0	32.4	33.3	34.7	31.7	32.1	33.0	34.4	30.9	31.3	32.2	33.6	29.5	29.9	30.9	32.3	27.8	28.3	29.2	30.6	26.3	26.7	27.6	29.0
		S/T	0.81	0.73	0.60	0.5	0.81	0.74	0.61	0.5	1.00	0.76	0.63	0.5	1.00	0.78	0.65	0.5	1.00	0.80	0.67	0.5	1.00	0.85	0.72	0.6
		ΔT	20.19	18.46	15.21	11.9	20.15	18.41	15.17	11.8	20.39	18.65	15.41	12.0	20.13	18.39	15.15	11.8	19.90	18.16	14.92	11.6	20.98	19.25	16.00	12.6
		kW	1.78	1.78	1.78	1.8	2.01	2.01	2.00	2.0	2.26	2.26	2.25	2.3	2.53	2.53	2.53	2.5	2.84	2.83	2.83	2.8	3.19	3.19	3.19	3.2
		Amps	6.82	6.82	6.80	6.9	7.80	7.80	7.78	7.9	8.90	8.89	8.87	8.9	10.08	10.07	10.05	10.1	11.40	11.39	11.38	11.5	12.95	12.94	12.93	13.0
		Hi PR	254	255	257	261.3	293	294	296	300.5	334	336	337	341.6	379	380	381	385.8	426	427	429	433.5	477	478	480	484.4
		Lo PR	122	124	127	131.7	129	131	134	138.9	136	137	140	145.1	141	142	145	150.4	146	148	151	155.6	153	154	157	162.1

IDB: Entering Indoor Dry Bulb Temperature

Shaded area reflects ACCA (TVA) conditions.

kW = Total system power

High and low pressures are measured at the liquid and suction access fittings.

Amps = outdoor unit amps (comp.+fan)

Design Subcooling 8 ±2 °F @ the liquid access fitting connection AHRI 95 test conditions. Design Superheat 15 ±2 °F @ the compressor suction access fitting connection.

Expanded Cooling Data — DP5HM4231 (High Stage) (Cont.)

			Outdoor Ambient Temperature																							
			65ºF				75ºF				85ºF				95ºF				105ºF				115ºF			
			Entering Indoor Wet Bulb Temperature																							
IDB	Airflow		59	63	67	71	59	63	67	71	59	63	67	71	59	63	67	71	59	63	67	71	59	63	67	71
80	800	MBh	30.7	31.1	32.0	33.4	30.4	30.8	31.8	33.2	29.6	30.0	31.0	32.4	28.2	28.7	29.6	31.0	26.5	27.0	27.9	29.3	25.0	25.4	26.4	27.8
		S/T	0.78	0.70	0.57	0.4	1.00	0.71	0.58	0.4	1.00	0.73	0.60	0.5	1.00	0.75	0.62	0.5	1.00	0.77	0.64	0.5	1.00	1.00	0.69	0.6
		ΔT	27.20	25.47	22.22	18.9	27.16	25.42	22.17	18.8	27.40	25.66	22.42	19.1	27.14	25.40	22.16	18.8	26.91	25.17	21.92	18.6	27.99	26.26	23.01	19.7
		kW	1.75	1.75	1.74	1.8	1.97	1.97	1.97	2.0	2.23	2.22	2.22	2.2	2.50	2.50	2.49	2.5	2.80	2.80	2.80	2.8	3.16	3.16	3.15	3.2
		Amps	6.68	6.67	6.65	6.7	7.66	7.65	7.63	7.7	8.75	8.74	8.72	8.8	9.93	9.92	9.91	10.0	11.25	11.25	11.23	11.3	12.80	12.80	12.78	12.9
		Hi PR	248	249	251	255.0	287	288	290	294.2	328	329	331	335.3	372	373	375	379.5	420	421	423	427.2	471	472	474	478.1
		Lo PR	117	118	121	126.4	124	126	128	133.5	130	132	135	139.7	136	137	140	145.0	141	142	145	150.2	147	149	152	156.7
	1000	MBh	31.3	31.7	32.7	34.1	31.0	31.5	32.4	33.8	30.2	30.7	31.6	33.0	28.8	29.3	**30.2**	31.6	27.2	27.6	28.5	29.9	25.6	26.1	27.0	28.4
		S/T	0.88	0.81	0.68	0.5	1.00	0.82	0.69	0.5	1.00	0.84	0.71	0.6	1.00	0.86	**0.73**	0.6	1.00	0.88	0.75	0.6	1.00	1.00	0.80	0.7
		ΔT	25.40	23.67	20.42	17.1	25.36	23.62	20.37	17.0	25.60	23.86	20.62	17.3	25.34	23.60	**20.36**	17.0	25.11	23.37	20.12	16.8	26.19	24.46	21.21	17.9
		kW	1.77	1.77	1.76	1.8	1.99	1.99	1.99	2.0	2.25	2.24	2.24	2.3	2.52	2.52	**2.51**	2.5	2.82	2.82	2.82	2.8	3.18	3.18	3.17	3.2
		Amps	6.76	6.76	6.74	6.8	7.74	7.74	7.72	7.8	8.84	8.83	8.81	8.9	10.02	10.01	**9.99**	10.1	11.34	11.33	11.32	11.4	12.89	12.88	12.87	12.9
		Hi PR	251	252	254	258.5	291	292	293	297.7	332	333	334	338.7	376	377	**379**	383.0	424	425	426	430.7	474	475	477	481.6
		Lo PR	120	121	124	129.1	127	128	131	136.2	133	134	137	142.5	138	140	**143**	147.7	144	145	148	152.9	150	151	154	159.4
	1200	MBh	32.1	32.6	33.5	34.9	31.9	32.3	33.2	34.6	31.0	31.5	32.4	33.8	29.7	30.1	31.0	32.4	28.0	28.4	29.3	30.7	26.4	26.9	27.8	29.2
		S/T	1.00	0.85	0.72	0.6	1.00	0.86	0.73	0.6	1.00	0.88	0.75	0.6	1.00	0.90	0.77	0.6	1.00	1.00	0.79	0.7	1.00	1.00	0.84	0.7
		ΔT	24.04	22.30	19.06	15.7	23.99	22.26	19.01	15.7	24.24	22.50	19.26	15.9	23.97	22.24	18.99	15.6	23.74	22.01	18.76	15.4	24.83	23.09	19.85	16.5
		kW	1.78	1.78	1.78	1.8	2.01	2.01	2.00	2.0	2.26	2.26	2.26	2.3	2.53	2.53	2.53	2.5	2.84	2.84	2.83	2.8	3.19	3.19	3.19	3.2
		Amps	6.83	6.82	6.80	6.9	7.81	7.80	7.78	7.9	8.90	8.89	8.88	9.0	10.08	10.08	10.06	10.1	11.41	11.40	11.38	11.5	12.96	12.95	12.93	13.0
		Hi PR	255	256	257	261.7	294	295	297	301.0	335	336	338	342.0	379	380	382	386.3	427	428	430	434.0	478	479	481	484.9
		Lo PR	123	124	127	132.2	130	131	134	139.4	136	138	141	145.6	141	143	146	150.9	147	148	151	156.1	153	155	158	162.6
85	800	MBh	31.2	31.6	32.6	34.0	30.9	31.4	32.3	33.7	30.1	30.6	31.5	32.9	28.7	29.2	30.1	31.5	27.1	27.5	28.4	29.8	25.5	26.0	26.9	28.3
		S/T	1.00	0.80	0.67	0.5	1.00	0.81	0.68	0.5	1.00	0.83	0.70	0.6	1.00	1.00	0.72	0.6	1.00	1.00	0.74	0.6	1.00	1.00	0.79	0.7
		ΔT	30.61	28.88	25.63	22.3	30.57	28.83	25.59	22.2	30.81	29.07	25.83	22.5	30.55	28.81	25.57	22.2	30.32	28.58	25.34	22.0	31.40	29.67	26.42	23.1
		kW	1.75	1.75	1.75	1.8	1.98	1.98	1.97	2.0	2.23	2.23	2.22	2.2	2.50	2.50	2.50	2.5	2.81	2.80	2.80	2.8	3.16	3.16	3.16	3.2
		Amps	6.70	6.69	6.67	6.7	7.67	7.67	7.65	7.7	8.77	8.76	8.74	8.8	9.95	9.94	9.93	10.0	11.27	11.26	11.25	11.3	12.82	12.81	12.80	12.9
		Hi PR	249	250	252	256.1	288	289	291	295.4	329	330	332	336.4	374	375	376	380.7	421	422	424	428.4	472	473	475	479.3
		Lo PR	119	120	123	128.1	126	127	130	135.3	132	134	137	141.5	137	139	142	146.8	143	144	147	152.0	149	150	153	158.5
	1000	MBh	31.8	32.3	33.2	34.6	31.5	32.0	32.9	34.3	30.7	31.2	32.1	33.5	29.4	29.8	30.7	32.1	27.7	28.1	29.0	30.4	26.1	26.6	27.5	28.9
		S/T	1.00	0.91	0.78	0.6	1.00	0.91	0.78	0.6	1.00	1.00	0.81	0.7	1.00	1.00	0.83	0.7	1.00	1.00	0.85	0.7	1.00	1.00	0.90	0.8
		ΔT	28.81	27.08	23.83	20.5	28.77	27.03	23.78	20.4	29.01	27.27	24.03	20.7	28.75	27.01	23.77	20.4	28.52	26.78	23.53	20.2	29.60	27.87	24.62	21.3
		kW	1.77	1.77	1.77	1.8	2.00	2.00	1.99	2.0	2.25	2.25	2.24	2.3	2.52	2.52	2.52	2.5	2.83	2.82	2.82	2.8	3.18	3.18	3.18	3.2
		Amps	6.78	6.77	6.76	6.8	7.76	7.75	7.74	7.8	8.85	8.85	8.83	8.9	10.04	10.03	10.01	10.1	11.36	11.35	11.33	11.4	12.91	12.90	12.89	13.0
		Hi PR	252	254	255	259.6	292	293	295	298.8	333	334	336	339.9	377	378	380	384.2	425	426	428	431.8	476	477	478	482.7
		Lo PR	121	123	126	130.8	129	130	133	138.0	135	136	139	144.2	140	142	145	149.5	145	147	150	154.7	152	153	156	161.2
	1200	MBh	32.6	33.1	34.0	35.4	32.4	32.8	33.7	35.1	31.6	32.0	32.9	34.3	30.2	30.6	31.5	32.9	28.5	28.9	29.9	31.3	27.0	27.4	28.3	29.7
		S/T	1.00	0.95	0.82	0.7	1.00	0.96	0.83	0.7	1.00	1.00	0.85	0.7	1.00	1.00	0.87	0.7	1.00	1.00	0.89	0.8	1.00	1.00	1.00	0.8
		ΔT	27.45	25.71	22.47	19.1	27.40	25.67	22.42	19.1	27.65	25.91	22.67	19.3	27.39	25.65	22.40	19.0	27.15	25.42	22.17	18.8	28.24	26.50	23.26	19.9
		kW	1.79	1.79	1.78	1.8	2.01	2.01	2.01	2.0	2.27	2.26	2.26	2.3	2.54	2.54	2.53	2.5	2.84	2.84	2.84	2.9	3.20	3.20	3.19	3.2
		Amps	6.85	6.84	6.82	6.9	7.83	7.82	7.80	7.9	8.92	8.91	8.90	9.0	10.10	10.10	10.08	10.2	11.42	11.42	11.40	11.5	12.98	12.97	12.95	13.0
		Hi PR	256	257	259	262.9	295	296	298	302.1	336	337	339	343.2	380	381	383	387.4	428	429	431	435.1	479	480	482	486.0
		Lo PR	125	126	129	134.0	132	133	136	141.1	138	139	142	147.4	143	145	148	152.7	148	150	153	157.9	155	156	159	164.4

IDB: Entering Indoor Dry Bulb Temperature

Shaded area reflects AHRI conditions.

kW = Total system power

High and low pressures are measured at the liquid and suction access fittings.

Amps = outdoor unit amps (comp.+fan)

Expanded Cooling Data — DP5HM4231 (Low Stage)

			Outdoor Ambient Temperature																							
			65ºF				75ºF				85ºF				95ºF				105ºF				115ºF			
			Entering Indoor Wet Bulb Temperature																							
IDB	Airflow		59	63	67	71	59	63	67	71	59	63	67	71	59	63	67	71	59	63	67	71	59	63	67	71
70	1000	MBh	42.4	43.0	44.3	-	42.0	42.6	43.9	-	40.9	41.5	42.8	-	39.0	39.6	40.8	-	36.6	37.2	38.5	-	34.5	35.1	36.4	-
		S/T	0.51	0.44	0.31	-	0.51	0.44	0.32	-	0.54	0.47	0.34	-	0.55	0.48	0.36	-	0.58	0.50	0.38	-	0.62	0.55	0.43	-
		ΔT	20.42	18.62	15.26	-	20.38	18.57	15.21	-	20.63	18.83	15.47	-	20.36	18.56	15.19	-	20.12	18.32	14.95	-	21.24	19.44	16.08	-
		kW	2.78	2.78	2.77	-	3.14	3.13	3.13	-	3.54	3.53	3.53	-	3.97	3.97	3.96	-	4.45	4.45	4.44	-	5.02	5.02	5.01	-
		Amps	10.60	10.59	10.56	-	12.16	12.15	12.12	-	13.90	13.89	13.86	-	15.78	15.77	15.74	-	17.88	17.87	17.84	-	20.34	20.33	20.31	-
		Hi PR	258	259	261	-	299	300	302	-	342	343	345	-	388	390	391	-	438	439	441	-	492	493	495	-
		Lo PR	113	114	117	-	120	121	124	-	126	127	130	-	131	133	135	-	136	138	141	-	143	144	147	-
	1275	MBh	43.3	43.9	45.2	-	42.9	43.5	44.8	-	41.8	42.4	43.7	-	39.9	40.5	41.8	-	37.5	38.1	39.4	-	35.4	36.0	37.3	-
		S/T	0.62	0.55	0.42	-	0.63	0.56	0.43	-	0.65	0.58	0.45	-	0.67	0.60	0.47	-	0.69	0.62	0.49	-	1.00	0.67	0.54	-
		ΔT	18.38	16.58	13.22	-	18.33	16.53	13.17	-	18.58	16.78	13.42	-	18.31	16.51	13.15	-	18.07	16.27	12.91	-	19.20	17.40	14.04	-
		kW	2.81	2.81	2.80	-	3.17	3.17	3.16	-	3.57	3.57	3.56	-	4.00	4.00	4.00	-	4.49	4.48	4.48	-	5.05	5.05	5.05	-
		Amps	10.75	10.74	10.72	-	12.31	12.30	12.27	-	14.05	14.04	14.01	-	15.93	15.92	15.89	-	18.03	18.02	17.99	-	20.50	20.48	20.46	-
		Hi PR	262	263	265	-	303	304	306	-	346	347	349	-	392	394	395	-	442	443	445	-	496	497	499	-
		Lo PR	116	117	120	-	123	124	127	-	129	130	133	-	134	135	138	-	139	140	143	-	145	147	150	-
	1500	MBh	44.3	44.9	46.2	-	43.9	44.5	45.8	-	42.8	43.4	44.7	-	40.9	41.5	42.7	-	38.5	39.1	40.4	-	36.4	37.0	38.3	-
		S/T	0.66	0.59	0.46	-	0.67	0.60	0.47	-	0.69	0.62	0.49	-	0.71	0.64	0.51	-	0.73	0.66	0.53	-	1.00	0.71	0.58	-
		ΔT	17.12	15.32	11.96	-	17.07	15.27	11.91	-	17.32	15.52	12.16	-	17.05	15.25	11.89	-	16.81	15.01	11.65	-	17.94	16.14	12.78	-
		kW	2.84	2.83	2.83	-	3.19	3.19	3.18	-	3.59	3.59	3.58	-	4.03	4.02	4.02	-	4.51	4.51	4.50	-	5.08	5.07	5.07	-
		Amps	10.85	10.84	10.81	-	12.40	12.39	12.37	-	14.14	14.13	14.10	-	16.02	16.01	15.98	-	18.12	18.11	18.09	-	20.59	20.58	20.55	-
		Hi PR	265	266	268	-	306	307	309	-	349	350	352	-	395	397	398	-	445	446	448	-	499	500	502	-
		Lo PR	119	120	123	-	125	127	130	-	132	133	136	-	137	138	141	-	142	143	146	-	148	149	152	-
75	1000	MBh	42.4	43.0	44.3	46.2	42.0	42.6	43.9	45.9	40.9	41.5	42.8	44.7	39.0	39.6	40.9	42.8	36.6	37.2	38.5	40.5	34.5	35.1	36.4	38.3
		S/T	0.63	0.56	0.43	0.3	0.63	0.56	0.44	0.3	0.66	0.59	0.46	0.3	0.68	0.60	0.48	0.3	1.00	0.62	0.50	0.4	1.00	0.67	0.55	0.4
		ΔT	24.38	22.58	19.22	15.7	24.33	22.53	19.17	15.7	24.59	22.79	19.42	15.9	24.32	22.52	19.15	15.7	24.07	22.27	18.91	15.4	25.20	23.40	20.04	16.6
		kW	2.78	2.77	2.77	2.8	3.13	3.13	3.13	3.2	3.53	3.53	3.53	3.6	3.97	3.96	3.96	4.0	4.45	4.45	4.44	4.5	5.02	5.01	5.01	5.0
		Amps	10.59	10.58	10.55	10.7	12.15	12.14	12.11	12.2	13.89	13.88	13.85	14.0	15.77	15.76	15.73	15.8	17.87	17.86	17.83	17.9	20.33	20.32	20.30	20.4
		Hi PR	258	260	261	265.9	299	301	302	306.9	342	344	345	349.9	389	390	392	396.2	439	440	442	446.1	492	493	495	499.3
		Lo PR	113	114	117	122.2	120	121	124	129.1	126	127	130	135.2	131	133	136	140.4	136	138	141	145.4	143	144	147	151.7
	1275	MBh	43.3	43.9	45.2	47.1	42.9	43.5	44.8	46.8	41.8	42.4	43.7	45.6	39.9	**40.5**	41.8	43.7	37.6	38.2	39.4	41.4	35.4	36.0	37.3	39.2
		S/T	0.74	0.67	0.55	0.4	0.75	0.68	0.55	0.4	0.77	0.70	0.57	0.4	1.00	**0.72**	0.59	0.5	1.00	0.74	0.61	0.5	1.00	0.79	0.66	0.5
		ΔT	22.34	20.54	17.18	13.7	22.29	20.49	17.13	13.6	22.54	20.74	17.38	13.9	22.27	**20.47**	17.11	13.6	22.03	20.23	16.87	13.4	23.16	21.36	18.00	14.5
		kW	2.81	2.81	2.80	2.8	3.17	3.17	3.16	3.2	3.57	3.57	3.56	3.6	4.00	**4.00**	3.99	4.0	4.48	4.48	4.48	4.5	5.05	5.05	5.04	5.1
		Amps	10.74	10.73	10.71	10.8	12.30	12.29	12.26	12.4	14.04	14.03	14.00	14.1	15.92	**15.91**	15.88	16.0	18.02	18.01	17.98	18.1	20.49	20.47	20.45	20.6
		Hi PR	262	264	265	269.9	303	305	306	310.9	346	348	349	353.9	393	**394**	396	400.1	443	444	445	450.0	496	497	499	503.3
		Lo PR	116	117	120	125.0	123	124	127	132.0	129	130	133	138.1	134	**135**	138	143.2	139	140	143	148.3	145	147	150	154.6
	1500	MBh	44.3	44.9	46.2	48.1	43.9	44.5	45.8	47.8	42.8	43.4	44.7	46.6	40.9	41.5	42.8	44.7	38.5	39.1	40.4	42.4	36.4	37.0	38.3	40.2
		S/T	0.78	0.71	0.58	0.5	0.79	0.72	0.59	0.5	0.81	0.74	0.61	0.5	1.00	0.76	0.63	0.5	1.00	0.78	0.65	0.5	1.00	0.83	0.70	0.6
		ΔT	21.08	19.28	15.92	12.4	21.03	19.23	15.87	12.4	21.28	19.48	16.12	12.6	21.01	19.21	15.85	12.4	20.77	18.97	15.61	12.1	21.90	20.10	16.74	13.3
		kW	2.83	2.83	2.82	2.9	3.19	3.19	3.18	3.2	3.59	3.59	3.58	3.6	4.02	4.02	4.01	4.0	4.51	4.50	4.50	4.5	5.07	5.07	5.06	5.1
		Amps	10.84	10.83	10.80	10.9	12.39	12.38	12.36	12.5	14.13	14.12	14.09	14.2	16.01	16.00	15.97	16.1	18.11	18.10	18.08	18.2	20.58	20.57	20.54	20.7
		Hi PR	265	267	268	272.9	306	308	309	313.9	349	351	352	356.9	396	397	399	403.2	446	447	449	453.1	499	500	502	506.3
		Lo PR	119	120	123	127.7	126	127	130	134.7	132	133	136	140.8	137	138	141	145.9	142	143	146	151.0	148	150	152	157.3

IDB: Entering Indoor Dry Bulb Temperature

Shaded area reflects ACCA (TVA) conditions.

kW = Total system power

High and low pressures are measured at the liquid and suction access fittings.

Amps = outdoor unit amps (comp.+fan)

Design Subcooling 8 ±2 °F @ the liquid access fitting connection AHRI 95 test conditions. Design Superheat 15 ±2 °F @ the compressor suction access fitting connection.

Expanded Cooling Data — DP5HM4231 (Low Stage) (Cont.)

			Outdoor Ambient Temperature																							
			65ºF				75ºF				85ºF				95ºF				105ºF				115ºF			
			Entering Indoor Wet Bulb Temperature																							
IDB	Airflow		59	63	67	71	59	63	67	71	59	63	67	71	59	63	67	71	59	63	67	71	59	63	67	71
80	1000	MBh	42.6	43.2	44.5	46.5	42.2	42.8	44.1	46.1	41.1	41.7	43.0	45.0	39.2	39.8	41.1	43.0	36.9	37.5	38.7	40.7	34.7	35.3	36.6	38.5
		S/T	0.75	0.67	0.55	0.4	0.75	0.68	0.55	0.4	1.00	0.70	0.58	0.4	1.00	0.72	0.59	0.5	1.00	0.74	0.62	0.5	1.00	0.79	0.66	0.5
		ΔT	28.37	26.57	23.21	19.7	28.32	26.52	23.16	19.7	28.57	26.77	23.41	19.9	28.30	26.50	23.14	19.7	28.06	26.26	22.90	19.4	29.19	27.39	24.03	20.5
		kW	2.78	2.78	2.77	2.8	3.14	3.13	3.13	3.2	3.54	3.53	3.53	3.6	3.97	3.97	3.96	4.0	4.45	4.45	4.44	4.5	5.02	5.02	5.01	5.0
		Amps	10.60	10.59	10.56	10.7	12.16	12.15	12.12	12.2	13.90	13.88	13.86	14.0	15.78	15.76	15.74	15.9	17.88	17.87	17.84	18.0	20.34	20.33	20.30	20.4
		Hi PR	259	260	262	266.4	300	301	303	307.4	343	344	346	350.4	389	390	392	396.7	439	440	442	446.5	492	493	495	499.8
		Lo PR	114	115	118	122.7	120	122	125	129.7	127	128	131	135.7	132	133	136	140.9	137	138	141	145.9	143	144	147	152.2
	1275	MBh	43.5	44.1	45.4	47.4	43.2	43.8	45.0	47.0	42.0	42.6	43.9	45.9	40.1	40.7	**42.0**	43.9	37.8	38.4	39.7	41.6	35.6	36.2	37.5	39.5
		S/T	0.86	0.79	0.66	0.5	1.00	0.80	0.67	0.5	1.00	0.82	0.69	0.6	1.00	0.84	**0.71**	0.6	1.00	0.86	0.73	0.6	1.00	1.00	0.78	0.6
		ΔT	26.32	24.52	21.16	17.7	26.27	24.47	21.11	17.6	26.53	24.73	21.37	17.9	26.26	24.46	**21.09**	17.6	26.02	24.22	20.85	17.4	27.14	25.34	21.98	18.5
		kW	2.81	2.81	2.80	2.8	3.17	3.17	3.16	3.2	3.57	3.57	3.56	3.6	4.00	4.00	**3.99**	4.0	4.49	4.48	4.48	4.5	5.05	5.05	5.04	5.1
		Amps	10.75	10.74	10.71	10.8	12.31	12.30	12.27	12.4	14.05	14.04	14.01	14.1	15.93	15.92	**15.89**	16.0	18.03	18.02	17.99	18.1	20.49	20.48	20.46	20.6
		Hi PR	263	264	266	270.3	304	305	307	311.4	347	348	350	354.3	393	394	**396**	400.6	443	444	446	450.5	496	497	499	503.7
		Lo PR	116	118	121	125.6	123	125	128	132.5	129	131	134	138.6	135	136	**139**	143.7	140	141	144	148.8	146	147	150	155.1
	1500	MBh	44.5	45.1	46.4	48.4	44.1	44.7	46.0	48.0	43.0	43.6	44.9	46.9	41.1	41.7	43.0	44.9	38.8	39.4	40.6	42.6	36.6	37.2	38.5	40.5
		S/T	0.90	0.83	0.70	0.6	1.00	0.83	0.71	0.6	1.00	0.86	0.73	0.6	1.00	0.88	0.75	0.6	1.00	0.90	0.77	0.6	1.00	1.00	0.82	0.7
		ΔT	25.06	23.26	19.90	16.4	25.02	23.21	19.85	16.4	25.27	23.47	20.11	16.6	25.00	23.20	19.83	16.4	24.76	22.96	19.59	16.1	25.88	24.08	20.72	17.2
		kW	2.83	2.83	2.83	2.9	3.19	3.19	3.18	3.2	3.59	3.59	3.58	3.6	4.02	4.02	4.02	4.0	4.51	4.51	4.50	4.5	5.08	5.07	5.07	5.1
		Amps	10.85	10.83	10.81	10.9	12.40	12.39	12.36	12.5	14.14	14.13	14.10	14.2	16.02	16.01	15.98	16.1	18.12	18.11	18.08	18.2	20.59	20.58	20.55	20.7
		Hi PR	266	267	269	273.4	307	308	310	314.4	350	351	353	357.4	396	397	399	403.6	446	447	449	453.5	499	500	502	506.8
		Lo PR	119	120	123	128.2	126	127	130	135.2	132	134	136	141.3	137	139	142	146.4	142	144	147	151.5	149	150	153	157.8
85	1000	MBh	43.3	43.9	45.2	47.2	43.0	43.6	44.8	46.8	41.8	42.5	43.7	45.7	39.9	40.5	41.8	43.8	37.6	38.2	39.5	41.4	35.4	36.0	37.3	39.3
		S/T	1.00	0.77	0.64	0.5	1.00	0.77	0.65	0.5	1.00	0.80	0.67	0.5	1.00	0.82	0.69	0.6	1.00	1.00	0.71	0.6	1.00	1.00	0.76	0.6
		ΔT	31.90	30.10	26.74	23.3	31.85	30.05	26.69	23.2	32.11	30.31	26.95	23.5	31.84	30.04	26.67	23.2	31.60	29.79	26.43	23.0	32.72	30.92	27.56	24.1
		kW	2.79	2.78	2.78	2.8	3.14	3.14	3.13	3.2	3.54	3.54	3.53	3.6	3.98	3.97	3.97	4.0	4.46	4.46	4.45	4.5	5.03	5.02	5.02	5.0
		Amps	10.63	10.62	10.59	10.7	12.19	12.18	12.15	12.3	13.93	13.91	13.89	14.0	15.81	15.79	15.77	15.9	17.91	17.90	17.87	18.0	20.37	20.36	20.33	20.5
		Hi PR	260	261	263	267.6	301	302	304	308.6	344	345	347	351.6	390	392	393	397.9	440	441	443	447.8	494	495	496	501.0
		Lo PR	115	117	120	124.4	122	124	127	131.4	128	130	133	137.4	133	135	138	142.6	138	140	143	147.6	145	146	149	154.0
	1275	MBh	44.3	44.9	46.1	48.1	43.9	44.5	45.8	47.7	42.8	43.4	44.6	46.6	40.8	41.4	42.7	44.7	38.5	39.1	40.4	42.3	36.4	37.0	38.2	40.2
		S/T	1.00	0.88	0.76	0.6	1.00	0.89	0.76	0.6	1.00	0.91	0.79	0.7	1.00	1.00	0.80	0.7	1.00	1.00	0.83	0.7	1.00	1.00	0.87	0.7
		ΔT	29.86	28.06	24.70	21.2	29.81	28.01	24.65	21.2	30.06	28.26	24.90	21.4	29.79	27.99	24.63	21.1	29.55	27.75	24.39	20.9	30.68	28.88	25.52	22.0
		kW	2.82	2.82	2.81	2.8	3.18	3.18	3.17	3.2	3.58	3.58	3.57	3.6	4.01	4.01	4.00	4.0	4.49	4.49	4.48	4.5	5.06	5.06	5.05	5.1
		Amps	10.78	10.77	10.74	10.9	12.34	12.33	12.30	12.4	14.08	14.07	14.04	14.2	15.96	15.95	15.92	16.0	18.06	18.05	18.02	18.1	20.52	20.51	20.49	20.6
		Hi PR	264	265	267	271.6	305	306	308	312.6	348	349	351	355.6	394	395	397	401.8	444	445	447	451.7	497	499	500	505.0
		Lo PR	118	119	122	127.3	125	126	129	134.2	131	133	135	140.3	136	138	141	145.4	141	143	146	150.5	148	149	152	156.8
	1500	MBh	45.2	45.9	47.1	49.1	44.9	45.5	46.7	48.7	43.7	44.4	45.6	47.6	41.8	42.4	43.7	45.7	39.5	40.1	41.4	43.3	37.3	37.9	39.2	41.2
		S/T	1.00	0.92	0.80	0.7	1.00	0.93	0.80	0.7	1.00	0.95	0.83	0.7	1.00	1.00	0.84	0.7	1.00	1.00	0.86	0.7	1.00	1.00	0.91	0.8
		ΔT	28.60	26.80	23.44	20.0	28.55	26.75	23.39	19.9	28.80	27.00	23.64	20.2	28.53	26.73	23.37	19.9	28.29	26.49	23.13	19.6	29.42	27.62	24.26	20.8
		kW	2.84	2.84	2.83	2.9	3.20	3.20	3.19	3.2	3.60	3.60	3.59	3.6	4.03	4.03	4.02	4.1	4.52	4.51	4.51	4.5	5.08	5.08	5.07	5.1
		Amps	10.88	10.86	10.84	11.0	12.43	12.42	12.39	12.5	14.17	14.16	14.13	14.3	16.05	16.04	16.01	16.1	18.15	18.14	18.11	18.2	20.62	20.61	20.58	20.7
		Hi PR	267	268	270	274.6	308	309	311	315.6	351	352	354	358.6	397	399	400	404.9	447	448	450	454.8	501	502	503	508.0
		Lo PR	121	122	125	130.0	128	129	132	136.9	134	135	138	143.0	139	140	143	148.1	144	145	148	153.2	150	152	155	159.5

IDB: Entering Indoor Dry Bulb Temperature

Shaded area reflects AHRI conditions.

kW = Total system power

High and low pressures are measured at the liquid and suction access fittings.

Amps = outdoor unit amps (comp.+fan)

			Outdoor Ambient Temperature																							
			65ºF				75ºF				85ºF				95ºF				105ºF				115ºF			
			Entering Indoor Wet Bulb Temperature																							
IDB	Airflow		59	63	67	71	59	63	67	71	59	63	67	71	59	63	67	71	59	63	67	71	59	63	67	71
70	900	MBh	33.1	33.5	34.5	-	32.8	33.2	34.2	-	31.9	32.4	33.4	-	30.4	30.9	31.9	-	28.6	29.0	30.0	-	26.9	27.4	28.4	-
		S/T	0.57	0.49	0.35	-	0.58	0.50	0.36	-	0.60	0.52	0.38	-	1.00	0.54	0.40	-	1.00	0.57	0.43	-	1.00	0.62	0.48	-
		ΔT	18.61	16.95	13.86	-	18.56	16.91	13.82	-	18.79	17.14	14.05	-	18.54	16.89	13.80	-	18.32	16.67	13.58	-	19.36	17.71	14.62	-
		kW	1.93	1.93	1.92	-	2.16	2.16	2.16	-	2.42	2.42	2.42	-	2.71	2.70	2.70	-	3.02	3.02	3.02	-	3.39	3.39	3.39	-
		Amps	6.94	6.93	6.91	-	7.96	7.95	7.93	-	9.09	9.08	9.07	-	10.32	10.31	10.29	-	11.69	11.68	11.67	-	13.30	13.29	13.28	-
		Hi PR	253	254	256	-	293	294	296	-	335	336	338	-	380	381	383	-	429	430	432	-	481	482	484	-
		Lo PR	126	127	130	-	133	135	138	-	140	142	145	-	146	147	150	-	151	153	156	-	158	160	163	-
	1125	MBh	33.7	34.2	35.2	-	33.4	33.9	34.9	-	32.6	33.0	34.0	-	31.1	31.5	32.5	-	29.2	29.7	30.7	-	27.6	28.0	29.0	-
		S/T	0.68	0.61	0.47	-	0.69	0.61	0.47	-	0.72	0.64	0.50	-	1.00	0.66	0.52	-	1.00	0.68	0.54	-	1.00	0.73	0.59	-
		ΔT	16.89	15.24	12.15	-	16.85	15.19	12.10	-	17.08	15.42	12.34	-	16.83	15.18	12.09	-	16.61	14.95	11.86	-	17.64	15.99	12.90	-
		kW	1.95	1.95	1.94	-	2.18	2.18	2.18	-	2.44	2.44	2.44	-	2.73	2.73	2.72	-	3.04	3.04	3.04	-	3.41	3.41	3.41	-
		Amps	7.03	7.02	7.01	-	8.05	8.04	8.02	-	9.18	9.17	9.16	-	10.41	10.40	10.39	-	11.78	11.77	11.76	-	13.39	13.38	13.37	-
		Hi PR	256	257	259	-	296	297	299	-	338	339	341	-	384	385	386	-	432	433	435	-	484	485	487	-
		Lo PR	128	130	133	-	136	138	141	-	143	145	148	-	149	150	153	-	154	156	159	-	161	163	166	-
	1400	MBh	34.8	35.3	36.3	-	34.5	35.0	36.0	-	33.7	34.1	35.1	-	32.2	32.7	33.6	-	30.4	30.8	31.8	-	28.7	29.2	30.2	-
		S/T	0.73	0.65	0.51	-	0.74	0.66	0.52	-	1.00	0.68	0.55	-	1.00	0.70	0.57	-	1.00	0.73	0.59	-	1.00	1.00	0.64	-
		ΔT	15.34	13.68	10.59	-	15.29	13.64	10.55	-	15.52	13.87	10.78	-	15.27	13.62	10.53	-	15.05	13.40	10.31	-	16.09	14.43	11.34	-
		kW	1.97	1.97	1.96	-	2.20	2.20	2.20	-	2.46	2.46	2.46	-	2.75	2.74	2.74	-	3.06	3.06	3.06	-	3.43	3.43	3.43	-
		Amps	7.11	7.10	7.09	-	8.13	8.12	8.10	-	9.26	9.26	9.24	-	10.49	10.48	10.47	-	11.86	11.86	11.84	-	13.47	13.47	13.45	-
		Hi PR	260	261	263	-	300	302	303	-	342	344	345	-	388	389	391	-	436	438	439	-	488	490	491	-
		Lo PR	133	134	138	-	140	142	145	-	147	149	152	-	153	155	158	-	159	160	163	-	166	167	170	-
75	900	MBh	33.1	33.5	34.5	36.1	32.8	33.2	34.2	35.8	31.9	32.4	33.4	34.9	30.4	30.9	31.9	33.4	28.6	29.1	30.0	31.6	26.9	27.4	28.4	29.9
		S/T	0.70	0.62	0.49	0.3	1.00	0.63	0.49	0.3	1.00	0.66	0.52	0.4	1.00	0.68	0.54	0.4	1.00	0.70	0.56	0.4	1.00	1.00	0.61	0.5
		ΔT	22.25	20.59	17.50	14.3	22.20	20.55	17.46	14.3	22.43	20.78	17.69	14.5	22.18	20.53	17.44	14.2	21.96	20.31	17.22	14.0	23.00	21.34	18.25	15.1
		kW	1.93	1.93	1.92	1.9	2.16	2.16	2.16	2.2	2.42	2.42	2.42	2.4	2.70	2.70	2.70	2.7	3.02	3.02	3.01	3.0	3.39	3.39	3.38	3.4
		Amps	6.93	6.93	6.91	7.0	7.95	7.94	7.92	8.0	9.09	9.08	9.06	9.1	10.31	10.31	10.29	10.4	11.69	11.68	11.66	11.7	13.30	13.29	13.27	13.3
		Hi PR	253	254	256	260.2	293	294	296	300.3	335	336	338	342.3	380	381	383	387.5	429	430	432	436.3	481	482	484	488.3
		Lo PR	126	127	130	135.8	133	135	138	143.5	140	142	145	150.2	146	147	151	155.9	151	153	156	161.5	158	160	163	168.5
	1125	MBh	33.7	34.2	35.2	36.7	33.4	33.9	34.9	36.4	32.6	33.0	34.0	35.6	31.1	**31.5**	32.5	34.1	29.3	29.7	30.7	32.2	27.6	28.1	29.0	30.6
		S/T	0.82	0.74	0.60	0.5	1.00	0.75	0.61	0.5	1.00	0.77	0.63	0.5	1.00	**0.79**	0.65	0.5	1.00	1.00	0.67	0.5	1.00	1.00	0.73	0.6
		ΔT	20.53	18.88	15.79	12.6	20.48	18.83	15.74	12.5	20.72	19.06	15.97	12.8	20.47	**18.81**	15.72	12.5	20.25	18.59	15.50	12.3	21.28	19.63	16.54	13.3
		kW	1.95	1.95	1.94	2.0	2.18	2.18	2.18	2.2	2.44	2.44	2.44	2.5	2.73	**2.72**	2.72	2.7	3.04	3.04	3.04	3.1	3.41	3.41	3.41	3.4
		Amps	7.02	7.02	7.00	7.1	8.04	8.03	8.02	8.1	9.18	9.17	9.15	9.2	10.40	**10.40**	10.38	10.5	11.78	11.77	11.75	11.8	13.39	13.38	13.36	13.4
		Hi PR	256	258	259	263.8	297	298	299	303.9	339	340	341	345.9	384	**385**	387	391.1	433	434	435	439.8	485	486	487	491.9
		Lo PR	129	130	133	138.7	136	138	141	146.4	143	145	148	153.1	149	**150**	153	158.9	154	156	159	164.5	161	163	166	171.5
	1400	MBh	34.9	35.3	36.3	37.8	34.6	35.0	36.0	37.6	33.7	34.2	35.2	36.7	32.2	32.7	33.7	35.2	30.4	30.8	31.8	33.4	28.7	29.2	30.2	31.7
		S/T	0.86	0.79	0.65	0.5	1.00	0.79	0.65	0.5	1.00	0.82	0.68	0.5	1.00	0.84	0.70	0.6	1.00	1.00	0.72	0.6	1.00	1.00	0.77	0.6
		ΔT	18.97	17.32	14.23	11.0	18.93	17.27	14.18	11.0	19.16	17.51	14.42	11.2	18.91	17.26	14.17	11.0	18.69	17.04	13.95	10.7	19.73	18.07	14.98	11.8
		kW	1.97	1.97	1.96	2.0	2.20	2.20	2.20	2.2	2.46	2.46	2.46	2.5	2.74	2.74	2.74	2.8	3.06	3.06	3.05	3.1	3.43	3.43	3.42	3.4
		Amps	7.11	7.10	7.08	7.2	8.12	8.11	8.10	8.2	9.26	9.25	9.23	9.3	10.49	10.48	10.46	10.5	11.86	11.85	11.83	11.9	13.47	13.46	13.44	13.5
		Hi PR	261	262	263	267.9	301	302	304	308.0	343	344	346	350.0	388	389	391	395.2	437	438	440	444.0	489	490	492	496.0
		Lo PR	133	134	138	143.0	141	142	145	150.7	147	149	152	157.4	153	155	158	163.2	159	160	163	168.7	166	167	170	175.8

IDB: Entering Indoor Dry Bulb Temperature

Shaded area reflects ACCA (TVA) conditions.

kW = Total system power

High and low pressures are measured at the liquid and suction access fittings.

Amps = outdoor unit amps (comp.+fan)

Design Subcooling 8 ±2 °F @ the liquid access fitting connection AHRI 95 test conditions. Design Superheat 15 ±2 °F @ the compressor suction access fitting connection.

Expanded Cooling Data — DP5HM4831 (High Stage) (Cont.)

			Outdoor Ambient Temperature																							
			65ºF				75ºF				85ºF				95ºF				105ºF				115ºF			
			Entering Indoor Wet Bulb Temperature																							
IDB	Airflow		59	63	67	71	59	63	67	71	59	63	67	71	59	63	67	71	59	63	67	71	59	63	67	71
80	900	MBh	33.2	33.7	34.7	36.2	32.9	33.4	34.4	35.9	32.1	32.5	33.5	35.1	30.6	31.1	32.0	33.6	28.8	29.2	30.2	31.7	27.1	27.6	28.6	30.1
		S/T	1.00	0.75	0.61	0.5	1.00	0.76	0.62	0.5	1.00	0.79	0.65	0.5	1.00	1.00	0.67	0.5	1.00	1.00	0.69	0.5	1.00	1.00	0.74	0.6
		ΔT	25.91	24.25	21.16	18.0	25.86	24.21	21.12	17.9	26.10	24.44	21.35	18.2	25.85	24.19	21.10	17.9	25.62	23.97	20.88	17.7	26.66	25.01	21.92	18.7
		kW	1.93	1.93	1.92	1.9	2.16	2.16	2.16	2.2	2.42	2.42	2.42	2.4	2.71	2.70	2.70	2.7	3.02	3.02	3.02	3.0	3.39	3.39	3.39	3.4
		Amps	6.94	6.93	6.91	7.0	7.96	7.95	7.93	8.0	9.09	9.08	9.07	9.1	10.32	10.31	10.29	10.4	11.69	11.68	11.67	11.7	13.30	13.29	13.28	13.4
		Hi PR	253	254	256	260.7	293	295	296	300.8	335	337	338	342.8	381	382	384	388.0	429	431	432	436.8	481	483	484	488.8
		Lo PR	126	128	131	136.3	134	135	139	144.0	141	142	145	150.8	146	148	151	156.5	152	153	157	162.1	159	160	164	169.1
	1125	MBh	33.9	34.4	35.4	36.9	33.6	34.1	35.1	36.6	32.7	33.2	34.2	35.7	31.2	31.7	**32.7**	34.2	29.4	29.9	30.9	32.4	27.8	28.2	29.2	30.7
		S/T	1.00	0.87	0.73	0.6	1.00	0.87	0.74	0.6	1.00	0.90	0.76	0.6	1.00	1.00	**0.78**	0.6	1.00	1.00	0.80	0.7	1.00	1.00	0.86	0.7
		ΔT	24.19	22.54	19.45	16.2	24.15	22.49	19.40	16.2	24.38	22.73	19.64	16.4	24.13	22.48	**19.39**	16.2	23.91	22.26	19.17	16.0	24.95	23.29	20.20	17.0
		kW	1.95	1.95	1.94	2.0	2.18	2.18	2.18	2.2	2.44	2.44	2.44	2.5	2.73	2.73	**2.72**	2.7	3.04	3.04	3.04	3.1	3.41	3.41	3.41	3.4
		Amps	7.03	7.02	7.00	7.1	8.05	8.04	8.02	8.1	9.18	9.17	9.16	9.2	10.41	10.40	**10.38**	10.5	11.78	11.77	11.76	11.8	13.39	13.38	13.37	13.4
		Hi PR	257	258	260	264.2	297	298	300	304.3	339	340	342	346.3	384	385	**387**	391.6	433	434	436	440.3	485	486	488	492.3
		Lo PR	129	131	134	139.3	137	138	142	147.0	144	145	148	153.7	149	151	**154**	159.4	155	156	160	165.0	162	163	167	172.0
	1400	MBh	35.0	35.5	36.5	38.0	34.7	35.2	36.2	37.7	33.9	34.3	35.3	36.9	32.4	32.8	33.8	35.4	30.5	31.0	32.0	33.5	28.9	29.3	30.3	31.9
		S/T	1.00	0.91	0.78	0.6	1.00	0.92	0.78	0.6	1.00	1.00	0.81	0.7	1.00	1.00	0.83	0.7	1.00	1.00	0.85	0.7	1.00	1.00	1.00	0.8
		ΔT	22.64	20.98	17.89	14.7	22.59	20.94	17.85	14.6	22.82	21.17	18.08	14.9	22.57	20.92	17.83	14.6	22.35	20.70	17.61	14.4	23.39	21.74	18.65	15.4
		kW	1.97	1.97	1.96	2.0	2.20	2.20	2.20	2.2	2.46	2.46	2.46	2.5	2.75	2.74	2.74	2.8	3.06	3.06	3.06	3.1	3.43	3.43	3.43	3.4
		Amps	7.11	7.10	7.09	7.2	8.13	8.12	8.10	8.2	9.26	9.25	9.24	9.3	10.49	10.48	10.47	10.5	11.86	11.86	11.84	11.9	13.47	13.47	13.45	13.5
		Hi PR	261	262	264	268.4	301	302	304	308.5	343	344	346	350.5	388	389	391	395.7	437	438	440	444.5	489	490	492	496.5
		Lo PR	133	135	138	143.6	141	143	146	151.3	148	149	153	158.0	154	155	158	163.7	159	161	164	169.3	166	168	171	176.3
85	900	MBh	33.8	34.3	35.3	36.8	33.5	34.0	35.0	36.5	32.6	33.1	34.1	35.6	31.1	31.6	32.6	34.1	29.3	29.8	30.8	32.3	27.6	28.1	29.1	30.6
		S/T	1.00	0.86	0.72	0.6	1.00	1.00	0.72	0.6	1.00	1.00	0.75	0.6	1.00	1.00	0.77	0.6	1.00	1.00	1.00	0.6	1.00	1.00	1.00	0.7
		ΔT	29.16	27.50	24.41	21.2	29.11	27.46	24.37	21.2	29.34	27.69	24.60	21.4	29.09	27.44	24.35	21.1	28.87	27.22	24.13	20.9	29.91	28.25	25.17	22.0
		kW	1.93	1.93	1.93	1.9	2.17	2.17	2.16	2.2	2.43	2.43	2.42	2.4	2.71	2.71	2.70	2.7	3.03	3.02	3.02	3.0	3.40	3.39	3.39	3.4
		Amps	6.96	6.95	6.93	7.0	7.98	7.97	7.95	8.0	9.11	9.10	9.08	9.2	10.34	10.33	10.31	10.4	11.71	11.70	11.69	11.8	13.32	13.31	13.30	13.4
		Hi PR	255	256	257	261.9	295	296	298	302.0	337	338	340	344.0	382	383	385	389.2	431	432	434	438.0	483	484	486	490.0
		Lo PR	128	130	133	138.2	136	137	141	145.9	142	144	147	152.7	148	150	153	158.4	154	155	159	164.0	161	162	166	171.0
	1125	MBh	34.5	34.9	35.9	37.5	34.2	34.6	35.6	37.2	33.3	33.8	34.8	36.3	31.8	32.3	33.3	34.8	30.0	30.5	31.4	33.0	28.3	28.8	29.8	31.3
		S/T	1.00	0.97	0.83	0.7	1.00	1.00	0.84	0.7	1.00	1.00	0.86	0.7	1.00	1.00	0.88	0.7	1.00	1.00	1.00	0.8	1.00	1.00	1.00	0.8
		ΔT	27.44	25.79	22.70	19.5	27.40	25.74	22.65	19.5	27.63	25.97	22.88	19.7	27.38	25.72	22.64	19.4	27.16	25.50	22.41	19.2	28.19	26.54	23.45	20.2
		kW	1.95	1.95	1.95	2.0	2.19	2.19	2.18	2.2	2.45	2.45	2.44	2.5	2.73	2.73	2.73	2.7	3.05	3.05	3.04	3.1	3.42	3.42	3.41	3.4
		Amps	7.05	7.04	7.02	7.1	8.07	8.06	8.04	8.1	9.20	9.19	9.18	9.3	10.43	10.42	10.40	10.5	11.80	11.79	11.78	11.9	13.41	13.40	13.39	13.5
		Hi PR	258	259	261	265.4	298	299	301	305.5	340	341	343	347.5	385	387	388	392.7	434	435	437	441.5	486	487	489	493.5
		Lo PR	131	133	136	141.2	139	140	143	148.9	145	147	150	155.6	151	153	156	161.3	157	158	162	166.9	164	165	169	173.9
	1400	MBh	35.6	36.1	37.1	38.6	35.3	35.8	36.8	38.3	34.4	34.9	35.9	37.4	32.9	33.4	34.4	35.9	31.1	31.6	32.6	34.1	29.4	29.9	30.9	32.4
		S/T	1.00	1.00	0.88	0.7	1.00	1.00	0.89	0.7	1.00	1.00	0.91	0.8	1.00	1.00	1.00	0.8	1.00	1.00	1.00	0.8	1.00	1.00	1.00	0.9
		ΔT	25.89	24.23	21.14	17.9	25.84	24.19	21.10	17.9	26.07	24.42	21.33	18.1	25.82	24.17	21.08	17.9	25.60	23.95	20.86	17.7	26.64	24.98	21.89	18.7
		kW	1.97	1.97	1.97	2.0	2.21	2.20	2.20	2.2	2.47	2.47	2.46	2.5	2.75	2.75	2.74	2.8	3.07	3.06	3.06	3.1	3.44	3.43	3.43	3.4
		Amps	7.13	7.12	7.11	7.2	8.15	8.14	8.12	8.2	9.28	9.27	9.26	9.3	10.51	10.50	10.49	10.6	11.88	11.87	11.86	11.9	13.49	13.48	13.47	13.5
		Hi PR	262	263	265	269.6	302	303	305	309.7	344	345	347	351.7	390	391	392	396.9	438	439	441	445.7	490	491	493	497.7
		Lo PR	135	137	140	145.5	143	145	148	153.2	150	151	155	159.9	155	157	160	165.6	161	163	166	171.2	168	170	173	178.2

IDB: Entering Indoor Dry Bulb Temperature

Shaded area reflects AHRI conditions.

kW = Total system power

High and low pressures are measured at the liquid and suction access fittings.

Amps = outdoor unit amps (comp.+fan)

Expanded Cooling Data — DP5HM4831 (Low Stage)

			Outdoor Ambient Temperature																							
			65ºF				75ºF				85ºF				95ºF				105ºF				115ºF			
			Entering Indoor Wet Bulb Temperature																							
IDB	Airflow		59	63	67	71	59	63	67	71	59	63	67	71	59	63	67	71	59	63	67	71	59	63	67	71
70	1300	MBh	46.1	46.7	48.1	-	45.7	46.3	47.7	-	44.5	45.1	46.5	-	42.4	43.0	44.4	-	39.8	40.5	41.9	-	37.5	38.2	39.5	-
		S/T	0.57	0.50	0.36	-	0.58	0.50	0.37	-	0.61	0.53	0.39	-	0.62	0.55	0.41	-	1.00	0.57	0.44	-	1.00	0.62	0.49	-
		ΔT	19.02	17.30	14.10	-	18.97	17.26	14.06	-	19.21	17.50	14.30	-	18.95	17.24	14.04	-	18.72	17.01	13.81	-	19.80	18.08	14.88	-
		kW	3.07	3.07	3.06	-	3.44	3.44	3.43	-	3.86	3.86	3.85	-	4.31	4.30	4.30	-	4.81	4.81	4.80	-	5.40	5.40	5.39	-
		Amps	11.06	11.04	11.01	-	12.67	12.66	12.63	-	14.48	14.46	14.44	-	16.43	16.42	16.39	-	18.61	18.60	18.57	-	21.17	21.16	21.13	-
		Hi PR	265	266	268	-	307	308	310	-	351	352	354	-	398	399	401	-	449	450	452	-	503	505	506	-
		Lo PR	122	124	127	-	130	132	135	-	137	138	141	-	142	144	147	-	148	149	152	-	154	156	159	-
	1575	MBh	46.9	47.6	48.9	-	46.5	47.1	48.5	-	45.3	45.9	47.3	-	43.2	43.9	45.2	-	40.7	41.3	42.7	-	38.3	39.0	40.4	-
		S/T	0.67	0.59	0.45	-	0.67	0.60	0.46	-	0.70	0.62	0.49	-	1.00	0.64	0.51	-	1.00	0.66	0.53	-	1.00	0.71	0.58	-
		ΔT	17.50	15.79	12.59	-	17.46	15.74	12.54	-	17.70	15.98	12.78	-	17.44	15.73	12.52	-	17.21	15.50	12.30	-	18.28	16.57	13.37	-
		kW	3.10	3.10	3.09	-	3.47	3.47	3.46	-	3.89	3.88	3.88	-	4.34	4.33	4.33	-	4.84	4.83	4.83	-	5.43	5.42	5.42	-
		Amps	11.18	11.17	11.14	-	12.79	12.78	12.75	-	14.60	14.59	14.56	-	16.55	16.54	16.51	-	18.73	18.72	18.69	-	21.29	21.28	21.25	-
		Hi PR	268	269	271	-	310	311	313	-	354	355	357	-	401	402	404	-	452	453	455	-	507	508	510	-
		Lo PR	125	127	130	-	132	134	137	-	139	141	144	-	145	146	149	-	150	152	155	-	157	158	162	-
	1900	MBh	48.2	48.8	50.2	-	47.8	48.4	49.8	-	46.6	47.2	48.6	-	44.5	45.1	46.5	-	41.9	42.6	44.0	-	39.6	40.3	41.7	-
		S/T	0.71	0.63	0.50	-	0.72	0.64	0.50	-	0.74	0.67	0.53	-	1.00	0.68	0.55	-	1.00	0.71	0.57	-	1.00	0.76	0.62	-
		ΔT	16.12	14.41	11.21	-	16.07	14.36	11.16	-	16.32	14.60	11.40	-	16.06	14.34	11.14	-	15.83	14.11	10.91	-	16.90	15.19	11.99	-
		kW	3.13	3.12	3.12	-	3.50	3.49	3.49	-	3.91	3.91	3.90	-	4.36	4.36	4.35	-	4.86	4.86	4.85	-	5.45	5.45	5.44	-
		Amps	11.29	11.28	11.25	-	12.91	12.89	12.87	-	14.71	14.70	14.67	-	16.66	16.65	16.62	-	18.84	18.83	18.80	-	21.40	21.39	21.36	-
		Hi PR	272	273	275	-	314	315	317	-	358	359	361	-	405	406	408	-	456	457	459	-	510	511	513	-
		Lo PR	128	130	133	-	136	137	141	-	142	144	147	-	148	150	153	-	153	155	158	-	160	162	165	-
75	1300	MBh	46.1	46.8	48.1	50.3	45.7	46.3	47.7	49.8	44.5	45.1	46.5	48.6	42.4	43.1	44.4	46.6	39.9	40.5	41.9	44.0	37.5	38.2	39.6	41.7
		S/T	0.70	0.63	0.49	0.3	0.71	0.63	0.50	0.4	1.00	0.66	0.52	0.4	1.00	0.68	0.54	0.4	1.00	0.70	0.56	0.4	1.00	1.00	0.62	0.5
		ΔT	22.79	21.07	17.87	14.6	22.74	21.03	17.83	14.5	22.98	21.27	18.07	14.7	22.72	21.01	17.81	14.5	22.49	20.78	17.58	14.3	23.57	21.85	18.65	15.3
		kW	3.07	3.07	3.06	3.1	3.44	3.44	3.43	3.5	3.86	3.85	3.85	3.9	4.31	4.30	4.30	4.3	4.81	4.80	4.80	4.8	5.40	5.39	5.39	5.4
		Amps	11.04	11.03	11.00	11.1	12.66	12.65	12.62	12.7	14.47	14.45	14.43	14.5	16.42	16.41	16.38	16.5	18.60	18.59	18.56	18.7	21.16	21.15	21.12	21.2
		Hi PR	265	266	268	272.7	307	308	310	314.6	351	352	354	358.6	398	399	401	405.9	449	450	452	456.9	504	505	507	511.3
		Lo PR	123	124	127	132.4	130	132	135	139.9	137	138	141	146.5	142	144	147	152.0	148	149	152	157.5	154	156	159	164.3
	1575	MBh	46.9	47.6	49.0	51.1	46.5	47.2	48.5	50.7	45.3	46.0	47.3	49.5	43.2	**43.9**	45.3	47.4	40.7	41.3	42.7	44.8	38.4	39.0	40.4	42.5
		S/T	0.80	0.72	0.58	0.4	0.80	0.73	0.59	0.4	1.00	0.75	0.62	0.5	1.00	**0.77**	0.63	0.5	1.00	0.79	0.66	0.5	1.00	1.00	0.71	0.6
		ΔT	21.27	19.56	16.36	13.0	21.23	19.51	16.31	13.0	21.47	19.75	16.55	13.2	21.21	**19.50**	16.29	13.0	20.98	19.27	16.07	12.7	22.05	20.34	17.14	13.8
		kW	3.10	3.09	3.09	3.1	3.47	3.47	3.46	3.5	3.88	3.88	3.87	3.9	4.33	**4.33**	4.32	4.4	4.84	4.83	4.83	4.9	5.42	5.42	5.41	5.4
		Amps	11.17	11.15	11.13	11.3	12.78	12.77	12.74	12.9	14.59	14.58	14.55	14.7	16.54	**16.53**	16.50	16.6	18.72	18.71	18.68	18.8	21.28	21.27	21.24	21.4
		Hi PR	268	269	271	275.9	310	311	313	317.8	354	355	357	361.8	401	**403**	404	409.1	452	454	455	460.1	507	508	510	514.5
		Lo PR	125	127	130	134.9	133	134	137	142.4	139	141	144	149.0	145	**146**	149	154.5	150	152	155	160.0	157	158	162	166.8
	1900	MBh	48.2	48.9	50.2	52.4	47.8	48.4	49.8	51.9	46.6	47.2	48.6	50.7	44.5	45.2	46.5	48.7	42.0	42.6	44.0	46.1	39.6	40.3	41.7	43.8
		S/T	0.84	0.76	0.63	0.5	1.00	0.77	0.63	0.5	1.00	0.79	0.66	0.5	1.00	0.81	0.68	0.5	1.00	1.00	0.70	0.6	1.00	1.00	0.75	0.6
		ΔT	19.89	18.18	14.98	11.7	19.84	18.13	14.93	11.6	20.09	18.37	15.17	11.9	19.83	18.11	14.91	11.6	19.60	17.88	14.68	11.4	20.67	18.96	15.76	12.4
		kW	3.12	3.12	3.11	3.1	3.49	3.49	3.49	3.5	3.91	3.91	3.90	3.9	4.36	4.36	4.35	4.4	4.86	4.86	4.85	4.9	5.45	5.45	5.44	5.5
		Amps	11.28	11.27	11.24	11.4	12.90	12.88	12.85	13.0	14.70	14.69	14.66	14.8	16.65	16.64	16.61	16.7	18.83	18.82	18.79	18.9	21.39	21.38	21.35	21.5
		Hi PR	272	273	275	279.5	314	315	317	321.5	358	359	361	365.4	405	406	408	412.7	456	457	459	463.7	511	512	514	518.2
		Lo PR	128	130	133	138.4	136	137	141	145.9	143	144	147	152.4	148	150	153	158.0	154	155	158	163.4	160	162	165	170.2

IDB: Entering Indoor Dry Bulb Temperature

Shaded area reflects ACCA (TVA) conditions.

kW = Total system power

High and low pressures are measured at the liquid and suction access fittings.

Amps = outdoor unit amps (comp.+fan)

Design Subcooling 8 ±2 °F @ the liquid access fitting connection AHRI 95 test conditions. Design Superheat 15 ±2 °F @ the compressor suction access fitting connection.

Expanded Cooling Data — DP5HM4831 (Low Stage) (Cont.)

			Outdoor Ambient Temperature																							
			65ºF				75ºF				85ºF				95ºF				105ºF				115ºF			
			Entering Indoor Wet Bulb Temperature																							
IDB	Airflow		59	63	67	71	59	63	67	71	59	63	67	71	59	63	67	71	59	63	67	71	59	63	67	71
80	1300	MBh	46.3	47.0	48.4	50.5	45.9	46.6	48.0	50.1	44.7	45.4	46.8	48.9	42.6	43.3	44.7	46.8	40.1	40.8	42.1	44.2	37.8	38.4	39.8	41.9
		S/T	1.00	0.75	0.62	0.5	1.00	0.76	0.62	0.5	1.00	0.78	0.65	0.5	1.00	0.80	0.67	0.5	1.00	1.00	0.69	0.5	1.00	1.00	0.74	0.6
		ΔT	26.58	24.87	21.67	18.4	26.54	24.82	21.62	18.3	26.78	25.06	21.86	18.5	26.52	24.80	21.60	18.3	26.29	24.58	21.37	18.1	27.36	25.65	22.45	19.1
		kW	3.07	3.07	3.06	3.1	3.44	3.44	3.43	3.5	3.86	3.86	3.85	3.9	4.31	4.30	4.30	4.3	4.81	4.81	4.80	4.8	5.40	5.39	5.39	5.4
		Amps	11.05	11.04	11.01	11.1	12.67	12.66	12.63	12.8	14.47	14.46	14.43	14.6	16.43	16.41	16.39	16.5	18.61	18.60	18.57	18.7	21.17	21.15	21.13	21.3
		Hi PR	266	267	269	273.2	307	309	310	315.1	351	353	354	359.1	399	400	402	406.4	450	451	453	457.4	504	505	507	511.8
		Lo PR	123	125	128	133.0	131	132	135	140.5	137	139	142	147.0	143	144	147	152.6	148	150	153	158.0	155	156	160	164.8
	1575	MBh	47.2	47.8	49.2	51.3	46.8	47.4	48.8	50.9	45.5	46.2	47.6	49.7	43.5	44.1	**45.5**	47.6	40.9	41.6	43.0	45.1	38.6	39.3	40.6	42.8
		S/T	1.00	0.85	0.71	0.6	1.00	0.85	0.72	0.6	1.00	0.88	0.74	0.6	1.00	1.00	**0.76**	0.6	1.00	1.00	0.78	0.6	1.00	1.00	0.83	0.7
		ΔT	25.07	23.36	20.15	16.8	25.02	23.31	20.11	16.8	25.26	23.55	20.35	17.0	25.01	23.29	**20.09**	16.8	24.78	23.06	19.86	16.5	25.85	24.14	20.93	17.6
		kW	3.10	3.10	3.09	3.1	3.47	3.47	3.46	3.5	3.89	3.88	3.88	3.9	4.34	4.33	**4.33**	4.4	4.84	4.83	4.83	4.9	5.43	5.42	5.42	5.4
		Amps	11.18	11.16	11.14	11.3	12.79	12.78	12.75	12.9	14.60	14.58	14.56	14.7	16.55	16.54	**16.51**	16.6	18.73	18.72	18.69	18.8	21.29	21.28	21.25	21.4
		Hi PR	269	270	272	276.4	311	312	314	318.3	355	356	358	362.3	402	403	**405**	409.6	453	454	456	460.6	507	509	510	515.0
		Lo PR	126	127	130	135.5	133	135	138	143.0	140	141	144	149.5	145	147	**150**	155.1	151	152	155	160.5	157	159	162	167.3
	1900	MBh	48.4	49.1	50.5	52.6	48.0	48.7	50.1	52.2	46.8	47.5	48.9	51.0	44.7	45.4	46.8	48.9	42.2	42.9	44.2	46.4	39.9	40.5	41.9	44.0
		S/T	1.00	0.89	0.75	0.6	1.00	0.90	0.76	0.6	1.00	0.92	0.78	0.6	1.00	1.00	0.80	0.7	1.00	1.00	0.83	0.7	1.00	1.00	0.88	0.7
		ΔT	23.69	21.97	18.77	15.5	23.64	21.93	18.72	15.4	23.88	22.17	18.96	15.6	23.62	21.91	18.71	15.4	23.39	21.68	18.48	15.2	24.47	22.75	19.55	16.2
		kW	3.13	3.12	3.12	3.1	3.50	3.49	3.49	3.5	3.91	3.91	3.90	3.9	4.36	4.36	4.35	4.4	4.86	4.86	4.85	4.9	5.45	5.45	5.44	5.5
		Amps	11.29	11.27	11.25	11.4	12.90	12.89	12.86	13.0	14.71	14.70	14.67	14.8	16.66	16.65	16.62	16.7	18.84	18.83	18.80	18.9	21.40	21.39	21.36	21.5
		Hi PR	272	274	275	280.0	314	315	317	322.0	358	359	361	365.9	406	407	409	413.2	457	458	460	464.2	511	512	514	518.7
		Lo PR	129	131	134	138.9	137	138	141	146.4	143	145	148	153.0	149	150	153	158.5	154	156	159	164.0	161	162	166	170.8
85	1300	MBh	47.1	47.8	49.2	51.3	46.7	47.4	48.7	50.9	45.5	46.2	47.5	49.7	43.4	44.1	45.5	47.6	40.9	41.5	42.9	45.0	38.6	39.2	40.6	42.7
		S/T	1.00	0.85	0.72	0.6	1.00	0.86	0.72	0.6	1.00	1.00	0.75	0.6	1.00	1.00	0.77	0.6	1.00	1.00	0.79	0.6	1.00	1.00	1.00	0.7
		ΔT	29.95	28.24	25.03	21.7	29.90	28.19	24.99	21.7	30.14	28.43	25.23	21.9	29.89	28.17	24.97	21.7	29.66	27.94	24.74	21.4	30.73	29.02	25.81	22.5
		kW	3.08	3.08	3.07	3.1	3.45	3.45	3.44	3.5	3.87	3.86	3.86	3.9	4.31	4.31	4.30	4.3	4.82	4.81	4.81	4.8	5.40	5.40	5.40	5.4
		Amps	11.08	11.07	11.04	11.2	12.70	12.69	12.66	12.8	14.50	14.49	14.46	14.6	16.46	16.44	16.42	16.5	18.64	18.63	18.60	18.7	21.20	21.19	21.16	21.3
		Hi PR	267	268	270	274.4	309	310	312	316.4	353	354	356	360.3	400	401	403	407.6	451	452	454	458.6	505	507	508	513.0
		Lo PR	125	126	130	134.8	132	134	137	142.3	139	140	144	148.9	145	146	149	154.4	150	151	155	159.9	157	158	161	166.7
	1575	MBh	47.9	48.6	50.0	52.1	47.5	48.2	49.6	51.7	46.3	47.0	48.4	50.5	44.2	44.9	46.3	48.4	41.7	42.4	43.7	45.9	39.4	40.0	41.4	43.5
		S/T	1.00	0.95	0.81	0.7	1.00	1.00	0.82	0.7	1.00	1.00	0.84	0.7	1.00	1.00	0.86	0.7	1.00	1.00	0.88	0.7	1.00	1.00	1.00	0.8
		ΔT	28.44	26.72	23.52	20.2	28.39	26.68	23.47	20.2	28.63	26.92	23.71	20.4	28.37	26.66	23.46	20.1	28.14	26.43	23.23	19.9	29.22	27.50	24.30	21.0
		kW	3.11	3.10	3.10	3.1	3.48	3.48	3.47	3.5	3.89	3.89	3.88	3.9	4.34	4.34	4.33	4.4	4.84	4.84	4.83	4.9	5.43	5.43	5.42	5.5
		Amps	11.21	11.19	11.17	11.3	12.82	12.81	12.78	12.9	14.63	14.61	14.59	14.7	16.58	16.57	16.54	16.7	18.76	18.75	18.72	18.8	21.32	21.31	21.28	21.4
		Hi PR	270	271	273	277.6	312	313	315	319.6	356	357	359	363.5	403	404	406	410.8	454	455	457	461.8	509	510	512	516.3
		Lo PR	127	129	132	137.3	135	136	140	144.8	141	143	146	151.4	147	149	152	156.9	152	154	157	162.4	159	161	164	169.2
	1900	MBh	49.2	49.9	51.3	53.4	48.8	49.5	50.9	53.0	47.6	48.3	49.6	51.8	45.5	46.2	47.6	49.7	43.0	43.6	45.0	47.1	40.7	41.3	42.7	44.8
		S/T	1.00	0.99	0.85	0.7	1.00	1.00	0.86	0.7	1.00	1.00	0.89	0.7	1.00	1.00	0.91	0.8	1.00	1.00	1.00	0.8	1.00	1.00	1.00	0.8
		ΔT	27.05	25.34	22.14	18.8	27.01	25.29	22.09	18.8	27.25	25.53	22.33	19.0	26.99	25.27	22.07	18.8	26.76	25.05	21.84	18.5	27.83	26.12	22.92	19.6
		kW	3.13	3.13	3.12	3.2	3.50	3.50	3.49	3.5	3.92	3.92	3.91	3.9	4.37	4.37	4.36	4.4	4.87	4.87	4.86	4.9	5.46	5.46	5.45	5.5
		Amps	11.32	11.31	11.28	11.4	12.93	12.92	12.89	13.0	14.74	14.73	14.70	14.8	16.69	16.68	16.65	16.8	18.87	18.86	18.83	19.0	21.43	21.42	21.39	21.5
		Hi PR	274	275	277	281.3	316	317	319	323.2	360	361	363	367.2	407	408	410	414.5	458	459	461	465.5	512	513	515	519.9
		Lo PR	131	132	136	140.8	138	140	143	148.3	145	146	150	154.8	150	152	155	160.4	156	157	161	165.8	163	164	167	172.6

IDB: Entering Indoor Dry Bulb Temperature

Shaded area reflects AHRI conditions.

kW = Total system power

High and low pressures are measured at the liquid and suction access fittings.

Amps = outdoor unit amps (comp.+fan)

Expanded Cooling Data — DP5HM6031 (High Stage)

			Outdoor Ambient Temperature																							
			65ºF				75ºF				85ºF				95ºF				105ºF				115ºF			
			Entering Indoor Wet Bulb Temperature																							
IDB	Airflow		59	63	67	71	59	63	67	71	59	63	67	71	59	63	67	71	59	63	67	71	59	63	67	71
70	1500	MBh	43.5	44.2	45.5	-	43.2	43.8	45.1	-	42.0	42.6	43.9	-	40.0	40.7	42.0	-	37.6	38.2	39.6	-	35.4	36.0	37.4	-
		S/T	0.57	0.49	0.35	-	0.58	0.50	0.36	-	0.60	0.52	0.38	-	1.00	0.54	0.40	-	1.00	0.57	0.42	-	1.00	0.62	0.48	-
		ΔT	19.96	18.20	14.90	-	19.91	18.15	14.85	-	20.16	18.40	15.10	-	19.89	18.13	14.84	-	19.66	17.89	14.60	-	20.76	19.00	15.70	-
		kW	2.24	2.24	2.23	-	2.50	2.50	2.50	-	2.80	2.80	2.79	-	3.12	3.11	3.11	-	3.47	3.47	3.47	-	3.89	3.89	3.88	-
		Amps	7.98	7.97	7.95	-	9.12	9.12	9.10	-	10.40	10.40	10.38	-	11.79	11.78	11.76	-	13.34	13.33	13.31	-	15.15	15.14	15.12	-
		Hi PR	248	249	251	-	287	289	290	-	329	330	332	-	373	374	376	-	421	422	424	-	472	473	475	-
		Lo PR	128	130	133	-	136	138	141	-	143	144	148	-	149	150	154	-	154	156	159	-	162	163	166	-
	1700	MBh	44.5	45.1	46.4	-	44.1	44.7	46.0	-	42.9	43.5	44.9	-	41.0	41.6	42.9	-	38.5	39.2	40.5	-	36.3	37.0	38.3	-
		S/T	0.69	0.61	0.47	-	0.70	0.62	0.48	-	1.00	0.65	0.51	-	1.00	0.67	0.53	-	1.00	0.69	0.55	-	1.00	1.00	0.60	-
		ΔT	18.02	16.25	12.96	-	17.97	16.20	12.91	-	18.22	16.45	13.16	-	17.95	16.18	12.89	-	17.71	15.95	12.65	-	18.82	17.05	13.76	-
		kW	2.26	2.26	2.26	-	2.53	2.53	2.52	-	2.82	2.82	2.82	-	3.14	3.14	3.13	-	3.50	3.49	3.49	-	3.91	3.91	3.91	-
		Amps	8.09	8.08	8.06	-	9.23	9.22	9.20	-	10.51	10.50	10.48	-	11.90	11.89	11.87	-	13.45	13.44	13.42	-	15.26	15.25	15.23	-
		Hi PR	252	253	255	-	291	292	294	-	332	334	335	-	377	378	380	-	425	426	428	-	476	477	479	-
		Lo PR	131	133	136	-	139	141	144	-	146	148	151	-	152	153	157	-	158	159	162	-	165	166	170	-
	1900	MBh	46.5	47.1	48.4	-	46.1	46.7	48.0	-	45.0	45.6	46.9	-	43.0	43.6	44.9	-	40.6	41.2	42.5	-	38.4	39.0	40.3	-
		S/T	0.74	0.66	0.52	-	1.00	0.67	0.52	-	1.00	0.69	0.55	-	1.00	0.71	0.57	-	1.00	1.00	0.59	-	1.00	1.00	0.65	-
		ΔT	15.93	14.16	10.87	-	15.88	14.12	10.82	-	16.13	14.36	11.07	-	15.86	14.10	10.80	-	15.63	13.86	10.57	-	16.73	14.97	11.67	-
		kW	2.29	2.29	2.28	-	2.55	2.55	2.55	-	2.85	2.85	2.84	-	3.17	3.17	3.16	-	3.52	3.52	3.52	-	3.94	3.94	3.93	-
		Amps	8.20	8.19	8.17	-	9.35	9.34	9.32	-	10.63	10.62	10.60	-	12.01	12.01	11.99	-	13.56	13.55	13.53	-	15.38	15.37	15.35	-
		Hi PR	257	258	260	-	297	298	299	-	338	339	341	-	382	383	385	-	430	431	433	-	481	482	484	-
		Lo PR	137	139	142	-	145	147	150	-	152	154	157	-	158	159	163	-	163	165	168	-	171	172	176	-
75	1500	MBh	43.6	44.2	45.5	47.5	43.2	43.8	45.1	47.1	42.0	42.7	44.0	46.0	40.1	40.7	42.0	44.0	37.7	38.3	39.6	41.6	35.5	36.1	37.4	39.4
		S/T	0.70	0.62	0.48	0.3	1.00	0.63	0.49	0.3	1.00	0.66	0.52	0.4	1.00	0.68	0.54	0.4	1.00	1.00	0.56	0.4	1.00	1.00	0.61	0.5
		ΔT	23.84	22.08	18.78	15.4	23.79	22.03	18.73	15.3	24.04	22.28	18.98	15.6	23.77	22.01	18.72	15.3	23.54	21.77	18.48	15.1	24.64	22.88	19.58	16.2
		kW	2.24	2.24	2.23	2.3	2.50	2.50	2.49	2.5	2.80	2.79	2.79	2.8	3.11	3.11	3.11	3.1	3.47	3.47	3.46	3.5	3.89	3.89	3.88	3.9
		Amps	7.97	7.96	7.94	8.0	9.12	9.11	9.09	9.2	10.40	10.39	10.37	10.5	11.78	11.77	11.75	11.8	13.33	13.32	13.30	13.4	15.15	15.14	15.12	15.2
		Hi PR	248	249	251	255.5	288	289	291	294.9	329	330	332	336.2	373	375	376	380.6	421	422	424	428.5	472	474	475	479.7
		Lo PR	128	130	133	138.6	136	138	141	146.4	143	145	148	153.3	149	150	154	159.1	154	156	159	164.9	162	163	167	172.0
	1700	MBh	44.5	45.1	46.4	48.4	44.1	44.7	46.0	48.0	43.0	43.6	44.9	46.9	41.0	**41.6**	42.9	44.9	38.6	39.2	40.5	42.5	36.4	37.0	38.3	40.3
		S/T	0.83	0.75	0.61	0.5	1.00	0.76	0.61	0.5	1.00	0.78	0.64	0.5	1.00	**0.80**	0.66	0.5	1.00	1.00	0.68	0.5	1.00	1.00	0.74	0.6
		ΔT	21.90	20.13	16.84	13.4	21.85	20.08	16.79	13.4	22.10	20.33	17.04	13.6	21.83	**20.06**	16.77	13.4	21.59	19.83	16.53	13.1	22.70	20.93	17.64	14.2
		kW	2.26	2.26	2.26	2.3	2.53	2.52	2.52	2.5	2.82	2.82	2.81	2.8	3.14	**3.14**	3.13	3.2	3.50	3.49	3.49	3.5	3.91	3.91	3.91	3.9
		Amps	8.08	8.07	8.05	8.1	9.23	9.22	9.20	9.3	10.51	10.50	10.48	10.6	11.89	**11.88**	11.86	12.0	13.44	13.43	13.41	13.5	15.25	15.25	15.23	15.3
		Hi PR	252	253	255	259.2	291	292	294	298.6	333	334	336	339.9	377	**378**	380	384.3	425	426	428	432.2	476	477	479	483.4
		Lo PR	131	133	136	141.7	139	141	144	149.6	146	148	151	156.5	152	**153**	157	162.3	158	159	163	168.0	165	166	170	175.2
	1900	MBh	46.5	47.1	48.4	50.5	46.1	46.7	48.1	50.1	45.0	45.6	46.9	48.9	43.0	43.6	44.9	46.9	40.6	41.2	42.5	44.5	38.4	39.0	40.3	42.3
		S/T	1.00	0.79	0.65	0.5	1.00	0.80	0.66	0.5	1.00	0.83	0.68	0.5	1.00	1.00	0.70	0.6	1.00	1.00	0.73	0.6	1.00	1.00	1.00	0.6
		ΔT	19.81	18.04	14.75	11.3	19.76	18.00	14.70	11.3	20.01	18.24	14.95	11.5	19.74	17.98	14.68	11.3	19.51	17.74	14.45	11.0	20.61	18.85	15.55	12.1
		kW	2.29	2.29	2.28	2.3	2.55	2.55	2.55	2.6	2.85	2.85	2.84	2.9	3.17	3.16	3.16	3.2	3.52	3.52	3.52	3.5	3.94	3.94	3.93	4.0
		Amps	8.19	8.19	8.17	8.3	9.34	9.33	9.31	9.4	10.62	10.61	10.59	10.7	12.01	12.00	11.98	12.1	13.55	13.55	13.53	13.6	15.37	15.36	15.34	15.4
		Hi PR	257	258	260	264.5	297	298	300	303.9	338	339	341	345.2	382	384	385	389.7	430	431	433	437.6	482	483	484	488.7
		Lo PR	137	139	142	147.6	145	147	150	155.5	152	154	157	162.4	158	159	163	168.2	164	165	168	173.9	171	172	176	181.1

IDB: Entering Indoor Dry Bulb Temperature

Shaded area reflects ACCA (TVA) conditions.

kW = Total system power

High and low pressures are measured at the liquid and suction access fittings.

Amps = outdoor unit amps (comp.+fan)

Design Subcooling 8 ±2 °F @ the liquid access fitting connection AHRI 95 test conditions. Design Superheat 15 ±2 °F @ the compressor suction access fitting connection.

			Outdoor Ambient Temperature																							
			65ºF				75ºF				85ºF				95ºF				105ºF				115ºF			
			Entering Indoor Wet Bulb Temperature																							
IDB	Airflow		59	63	67	71	59	63	67	71	59	63	67	71	59	63	67	71	59	63	67	71	59	63	67	71
80	1500	MBh	43.8	44.4	45.7	47.7	43.4	44.0	45.3	47.3	42.3	42.9	44.2	46.2	40.3	40.9	42.2	44.2	37.9	38.5	39.8	41.8	35.7	36.3	37.6	39.6
		S/T	1.00	0.76	0.61	0.5	1.00	0.76	0.62	0.5	1.00	0.79	0.65	0.5	1.00	1.00	0.67	0.5	1.00	1.00	0.69	0.5	1.00	1.00	1.00	0.6
		ΔT	27.75	25.98	22.69	19.3	27.70	25.93	22.64	19.2	27.95	26.18	22.89	19.5	27.68	25.92	22.62	19.2	27.45	25.68	22.39	19.0	28.55	26.79	23.49	20.1
		kW	2.24	2.24	2.23	2.3	2.50	2.50	2.50	2.5	2.80	2.80	2.79	2.8	3.12	3.11	3.11	3.1	3.47	3.47	3.47	3.5	3.89	3.89	3.88	3.9
		Amps	7.98	7.97	7.95	8.0	9.12	9.11	9.09	9.2	10.40	10.39	10.37	10.5	11.79	11.78	11.76	11.8	13.34	13.33	13.31	13.4	15.15	15.14	15.12	15.2
		Hi PR	249	250	252	256.0	288	289	291	295.4	329	331	332	336.6	374	375	377	381.1	422	423	425	429.0	473	474	476	480.1
		Lo PR	129	130	134	139.1	137	138	141	147.0	143	145	148	153.9	149	151	154	159.7	155	157	160	165.4	162	164	167	172.6
	1700	MBh	44.7	45.3	46.7	48.7	44.3	44.9	46.3	48.3	43.2	43.8	45.1	47.1	41.2	41.8	**43.1**	45.1	38.8	39.4	40.7	42.7	36.6	37.2	38.5	40.5
		S/T	1.00	0.88	0.74	0.6	1.00	0.89	0.74	0.6	1.00	1.00	0.77	0.6	1.00	1.00	**0.79**	0.6	1.00	1.00	0.81	0.7	1.00	1.00	1.00	0.7
		ΔT	25.80	24.04	20.74	17.3	25.75	23.99	20.69	17.3	26.00	24.24	20.94	17.5	25.74	23.97	**20.68**	17.3	25.50	23.74	20.44	17.0	26.60	24.84	21.54	18.1
		kW	2.26	2.26	2.26	2.3	2.53	2.53	2.52	2.5	2.82	2.82	2.82	2.8	3.14	3.14	**3.13**	3.2	3.50	3.49	3.49	3.5	3.91	3.91	3.91	3.9
		Amps	8.09	8.08	8.06	8.1	9.23	9.22	9.20	9.3	10.51	10.50	10.48	10.6	11.90	11.89	**11.87**	12.0	13.44	13.44	13.42	13.5	15.26	15.25	15.23	15.3
		Hi PR	252	254	255	259.7	292	293	295	299.1	333	334	336	340.3	378	379	**380**	384.8	426	427	428	432.7	477	478	479	483.8
		Lo PR	132	133	137	142.3	140	141	145	150.1	147	148	152	157.0	152	154	**157**	162.9	158	160	163	168.6	165	167	170	175.8
	1900	MBh	46.7	47.4	48.7	50.7	46.4	47.0	48.3	50.3	45.2	45.8	47.1	49.1	43.2	43.9	45.2	47.2	40.8	41.4	42.8	44.8	38.6	39.2	40.6	42.6
		S/T	1.00	0.92	0.78	0.6	1.00	1.00	0.79	0.6	1.00	1.00	0.82	0.7	1.00	1.00	0.84	0.7	1.00	1.00	1.00	0.7	1.00	1.00	1.00	0.8
		ΔT	23.71	21.95	18.66	15.2	23.67	21.90	18.61	15.2	23.91	22.15	18.86	15.4	23.65	21.88	18.59	15.2	23.41	21.65	18.35	14.9	24.52	22.75	19.46	16.0
		kW	2.29	2.29	2.28	2.3	2.55	2.55	2.55	2.6	2.85	2.85	2.84	2.9	3.17	3.17	3.16	3.2	3.52	3.52	3.52	3.5	3.94	3.94	3.93	4.0
		Amps	8.20	8.19	8.17	8.3	9.35	9.34	9.32	9.4	10.63	10.62	10.60	10.7	12.01	12.00	11.98	12.1	13.56	13.55	13.53	13.6	15.38	15.37	15.35	15.4
		Hi PR	258	259	261	265.0	297	298	300	304.4	338	340	341	345.7	383	384	386	390.1	431	432	434	438.0	482	483	485	489.2
		Lo PR	138	139	143	148.2	146	147	151	156.1	153	154	157	163.0	158	160	163	168.8	164	166	169	174.5	171	173	176	181.7
85	1500	MBh	44.5	45.2	46.5	48.5	44.1	44.8	46.1	48.1	43.0	43.6	44.9	46.9	41.0	41.7	43.0	45.0	38.6	39.2	40.6	42.6	36.4	37.0	38.4	40.4
		S/T	1.00	0.86	0.72	0.6	1.00	1.00	0.73	0.6	1.00	1.00	0.75	0.6	1.00	1.00	0.77	0.6	1.00	1.00	1.00	0.6	1.00	1.00	1.00	0.7
		ΔT	31.21	29.45	26.15	22.7	31.16	29.40	26.10	22.7	31.41	29.65	26.35	22.9	31.15	29.38	26.09	22.7	30.91	29.15	25.85	22.4	32.01	30.25	26.96	23.5
		kW	2.24	2.24	2.24	2.3	2.51	2.51	2.50	2.5	2.80	2.80	2.80	2.8	3.12	3.12	3.11	3.1	3.48	3.47	3.47	3.5	3.89	3.89	3.89	3.9
		Amps	8.00	7.99	7.97	8.1	9.15	9.14	9.12	9.2	10.43	10.42	10.40	10.5	11.81	11.80	11.78	11.9	13.36	13.35	13.33	13.4	15.17	15.16	15.15	15.2
		Hi PR	250	251	253	257.1	289	290	292	296.5	331	332	333	337.8	375	376	378	382.3	423	424	426	430.2	474	475	477	481.3
		Lo PR	131	132	136	141.1	139	140	143	148.9	145	147	150	155.8	151	153	156	161.7	157	159	162	167.4	164	166	169	174.5
	1700	MBh	45.5	46.1	47.4	49.4	45.1	45.7	47.0	49.0	43.9	44.5	45.9	47.9	41.9	42.6	43.9	45.9	39.5	40.2	41.5	43.5	37.3	38.0	39.3	41.3
		S/T	1.00	0.98	0.84	0.7	1.00	1.00	0.85	0.7	1.00	1.00	0.88	0.7	1.00	1.00	1.00	0.7	1.00	1.00	1.00	0.8	1.00	1.00	1.00	0.8
		ΔT	29.27	27.50	24.21	20.8	29.22	27.45	24.16	20.7	29.47	27.70	24.41	21.0	29.20	27.44	24.14	20.7	28.96	27.20	23.90	20.5	30.07	28.30	25.01	21.6
		kW	2.27	2.27	2.26	2.3	2.53	2.53	2.53	2.5	2.83	2.83	2.82	2.8	3.15	3.14	3.14	3.2	3.50	3.50	3.50	3.5	3.92	3.92	3.91	3.9
		Amps	8.11	8.10	8.08	8.2	9.25	9.24	9.23	9.3	10.53	10.52	10.51	10.6	11.92	11.91	11.89	12.0	13.47	13.46	13.44	13.5	15.28	15.27	15.25	15.3
		Hi PR	254	255	256	260.8	293	294	296	300.2	334	335	337	341.5	379	380	382	386.0	427	428	430	433.9	478	479	481	485.0
		Lo PR	134	135	139	144.2	142	143	147	152.1	149	150	153	159.0	154	156	159	164.8	160	162	165	170.5	167	169	172	177.7
	1900	MBh	47.5	48.1	49.4	51.4	47.1	47.7	49.0	51.0	45.9	46.6	47.9	49.9	44.0	44.6	45.9	47.9	41.6	42.2	43.5	45.5	39.4	40.0	41.3	43.3
		S/T	1.00	1.00	0.89	0.7	1.00	1.00	0.89	0.7	1.00	1.00	1.00	0.8	1.00	1.00	1.00	0.8	1.00	1.00	1.00	0.8	1.00	1.00	1.00	1.0
		ΔT	27.18	25.41	22.12	18.7	27.13	25.37	22.07	18.7	27.38	25.61	22.32	18.9	27.11	25.35	22.05	18.6	26.88	25.11	21.82	18.4	27.98	26.22	22.92	19.5
		kW	2.30	2.29	2.29	2.3	2.56	2.56	2.55	2.6	2.85	2.85	2.85	2.9	3.17	3.17	3.17	3.2	3.53	3.53	3.52	3.5	3.95	3.94	3.94	4.0
		Amps	8.22	8.21	8.19	8.3	9.37	9.36	9.34	9.4	10.65	10.64	10.62	10.7	12.03	12.03	12.01	12.1	13.58	13.57	13.55	13.6	15.40	15.39	15.37	15.5
		Hi PR	259	260	262	266.2	298	299	301	305.6	340	341	342	346.8	384	385	387	391.3	432	433	435	439.2	483	484	486	490.3
		Lo PR	140	141	145	150.1	148	149	152	158.0	154	156	159	164.9	160	162	165	170.7	166	168	171	176.4	173	175	178	183.6

IDB: Entering Indoor Dry Bulb Temperature

Shaded area reflects AHRI conditions.

kW = Total system power

High and low pressures are measured at the liquid and suction access fittings.

Amps = outdoor unit amps (comp.+fan)

Expanded Cooling Data — DP5HM6031 (Low Stage)

			Outdoor Ambient Temperature																							
			65ºF				75ºF				85ºF				95ºF				105ºF				115ºF			
			Entering Indoor Wet Bulb Temperature																							
IDB	Airflow		59	63	67	71	59	63	67	71	59	63	67	71	59	63	67	71	59	63	67	71	59	63	67	71
70	1500	MBh	60.5	61.3	63.1	-	59.9	60.8	62.6	-	58.3	59.2	61.0	-	55.6	56.4	58.3	-	52.2	53.1	54.9	-	49.2	50.0	51.9	-
		S/T	0.54	0.46	0.3	-	0.54	0.47	0.3	-	0.57	0.49	0.4	-	1.00	0.51	0.4	-	1.00	0.53	0.4	-	1.00	0.59	0.4	-
		ΔT	20.93	19.10	15.7	-	20.88	19.05	15.6	-	21.13	19.30	15.9	-	20.86	19.03	15.6	-	20.61	18.78	15.4	-	21.76	19.93	16.5	-
		kW	3.56	3.55	3.5	-	3.97	3.97	4.0	-	4.44	4.44	4.4	-	4.95	4.95	4.9	-	5.52	5.51	5.5	-	6.18	6.18	6.2	-
		Amps	12.66	12.65	12.6	-	14.49	14.47	14.4	-	16.52	16.51	16.5	-	18.72	18.71	18.7	-	21.18	21.17	21.1	-	24.07	24.06	24.0	-
		Hi PR	259	260	262.1	-	300	301	303.3	-	343	345	346.5	-	390	391	392.9	-	440	441	443.1	-	494	495	496.6	-
		Lo PR	124	126	129.1	-	132	134	136.8	-	139	140	143.5	-	144	146	149.1	-	150	152	154.7	-	157	158	161.7	-
	1700	MBh	61.8	62.7	64.5	-	61.3	62.2	64.0	-	59.7	60.6	62.4	-	57.0	57.8	59.6	-	53.6	54.5	56.3	-	50.6	51.4	53.2	-
		S/T	0.68	0.60	0.5	-	0.68	0.60	0.5	-	0.71	0.63	0.5	-	1.00	0.65	0.5	-	1.00	0.67	0.5	-	1.00	0.72	0.6	-
		ΔT	18.67	16.84	13.4	-	18.62	16.79	13.4	-	18.88	17.05	13.6	-	18.60	16.77	13.4	-	18.36	16.53	13.1	-	19.50	17.67	14.3	-
		kW	3.60	3.60	3.6	-	4.02	4.02	4.0	-	4.49	4.48	4.5	-	4.99	4.99	5.0	-	5.56	5.56	5.5	-	6.22	6.22	6.2	-
		Amps	12.86	12.84	12.8	-	14.68	14.67	14.6	-	16.71	16.70	16.7	-	18.92	18.90	18.9	-	21.38	21.36	21.3	-	24.26	24.25	24.2	-
		Hi PR	263	265	266.4	-	305	306	307.6	-	348	349	350.7	-	394	395	397.2	-	444	446	447.4	-	498	499	500.8	-
		Lo PR	128	129	132.5	-	135	137	140.1	-	142	144	146.8	-	148	149	152.5	-	153	155	158.1	-	160	162	165.0	-
	1900	MBh	64.3	65.2	67.0	-	63.8	64.6	66.4	-	62.2	63.0	64.8	-	59.4	60.3	62.1	-	56.1	56.9	58.7	-	53.0	53.9	55.7	-
		S/T	0.72	0.64	0.5	-	0.73	0.65	0.5	-	1.00	0.68	0.5	-	1.00	0.69	0.6	-	1.00	0.72	0.6	-	1.00	1.00	0.6	-
		ΔT	16.71	14.88	11.5	-	16.66	14.83	11.4	-	16.92	15.09	11.7	-	16.64	14.82	11.4	-	16.40	14.57	11.2	-	17.55	15.72	12.3	-
		kW	3.64	3.63	3.6	-	4.06	4.05	4.0	-	4.53	4.52	4.5	-	5.03	5.03	5.0	-	5.60	5.59	5.6	-	6.26	6.26	6.3	-
		Amps	13.02	13.01	13.0	-	14.85	14.83	14.8	-	16.88	16.87	16.8	-	19.08	19.07	19.0	-	21.54	21.53	21.5	-	24.43	24.42	24.4	-
		Hi PR	268	269	271.3	-	310	311	312.5	-	353	354	355.7	-	399	400	402.2	-	449	450	452.3	-	503	504	505.8	-
		Lo PR	133	134	137.5	-	140	142	145.1	-	147	149	151.9	-	153	154	157.5	-	158	160	163.1	-	165	167	170.1	-
75	1500	MBh	60.5	61.4	63.2	66.0	60.0	60.8	62.6	65.4	58.4	59.2	61.0	63.8	55.6	56.5	58.3	61.1	52.3	53.1	54.9	57.7	49.2	50.1	51.9	54.7
		S/T	0.67	0.59	0.5	0.31	0.67	0.60	0.5	0.32	1.00	0.62	0.5	0.34	1.00	0.64	0.5	0.36	1.00	0.67	0.5	0.38	1.00	1.00	0.6	0.4
		ΔT	24.95	23.12	19.7	16.17	24.90	23.07	19.7	16.12	25.15	23.33	19.9	16.37	24.88	23.05	19.6	16.10	24.63	22.80	19.4	15.85	25.78	23.95	20.5	17.0
		kW	3.55	3.55	3.5	3.57	3.97	3.97	4.0	3.99	4.44	4.44	4.4	4.46	4.95	4.94	4.9	4.97	5.51	5.51	5.5	5.53	6.18	6.17	6.2	6.2
		Amps	12.65	12.64	12.6	12.75	14.47	14.46	14.4	14.57	16.51	16.49	16.5	16.60	18.71	18.70	18.7	18.81	21.17	21.16	21.1	21.27	24.06	24.04	24.0	24.2
		Hi PR	259	260	262.3	267	301	302	303.5	308	344	345	346.7	351	390	391	393.2	398	440	441	443.3	448	494	495	496.8	501.3
		Lo PR	124	126	129.1	134	132	134	136.8	142	139	140	143.5	149	144	146	149.2	155	150	152	154.7	160	157	158	161.7	167.1
	1700	MBh	61.9	62.7	64.6	67.4	61.3	62.2	64.0	66.8	59.7	60.6	62.4	65.2	57.0	**57.9**	59.7	62.5	53.6	54.5	56.3	59.1	50.6	51.4	53.3	56.1
		S/T	0.81	0.73	0.6	0.45	1.00	0.74	0.6	0.45	1.00	0.76	0.6	0.48	1.00	**0.78**	0.6	0.50	1.00	1.00	0.7	0.52	1.00	1.00	0.7	0.6
		ΔT	22.69	20.86	17.4	13.91	22.64	20.81	17.4	13.86	22.90	21.07	17.7	14.12	22.62	**20.79**	17.4	13.84	22.38	20.55	17.1	13.60	23.52	21.69	18.3	14.7
		kW	3.60	3.59	3.6	3.62	4.02	4.01	4.0	4.04	4.48	4.48	4.5	4.51	4.99	**4.99**	5.0	5.01	5.56	5.55	5.5	5.58	6.22	6.22	6.2	6.2
		Amps	12.84	12.83	12.8	12.94	14.67	14.65	14.6	14.76	16.70	16.69	16.7	16.80	18.90	**18.89**	18.9	19.00	21.37	21.35	21.3	21.46	24.25	24.24	24.2	24.3
		Hi PR	264	265	266.6	271	305	306	307.8	312	348	349	351.0	356	394	**396**	397.5	402	445	446	447.6	452	498	499	501.1	505.6
		Lo PR	128	129	132.5	138	135	137	140.1	146	142	144	146.8	152	148	**149**	152.5	158	153	155	158.1	163	160	162	165.0	170.4
	1900	MBh	64.3	65.2	67.0	69.8	63.8	64.6	66.5	69.3	62.2	63.1	64.9	67.7	59.4	60.3	62.1	64.9	56.1	57.0	58.8	61.6	53.0	53.9	55.7	58.5
		S/T	0.85	0.77	0.6	0.49	1.00	0.78	0.6	0.50	1.00	0.81	0.7	0.52	1.00	0.83	0.7	0.54	1.00	1.00	0.7	0.57	1.00	1.00	0.8	0.6
		ΔT	20.73	18.91	15.5	11.95	20.68	18.86	15.4	11.90	20.94	19.11	15.7	12.16	20.67	18.84	15.4	11.89	20.42	18.59	15.2	11.64	21.57	19.74	16.3	12.8
		kW	3.64	3.63	3.6	3.66	4.05	4.05	4.0	4.08	4.52	4.52	4.5	4.54	5.03	5.03	5.0	5.05	5.60	5.59	5.6	5.62	6.26	6.26	6.2	6.3
		Amps	13.01	13.00	13.0	13.10	14.83	14.82	14.8	14.93	16.87	16.85	16.8	16.96	19.07	19.06	19.0	19.16	21.53	21.52	21.5	21.63	24.42	24.40	24.4	24.5
		Hi PR	269	270	271.5	276	310	311	312.7	317	353	354	355.9	360	399	401	402.4	407	450	451	452.5	457	503	504	506.0	510.6
		Lo PR	133	134	137.5	143	140	142	145.2	151	147	149	151.9	157	153	154	157.6	163	158	160	163.1	168	165	167	170.1	175.4

IDB: Entering Indoor Dry Bulb Temperature

Shaded area reflects ACCA (TVA) conditions.

kW = Total system power

High and low pressures are measured at the liquid and suction access fittings.

Amps = outdoor unit amps (comp.+fan)

Design Subcooling 8 ±2 °F @ the liquid access fitting connection AHRI 95 test conditions. Design Superheat 15 ±2 °F @ the compressor suction access fitting connection.

Expanded Cooling Data —DP5HM6031 (Low Stage) (Cont.)

			Outdoor Ambient Temperature																							
			65ºF				75ºF				85ºF				95ºF				105ºF				115ºF			
			Entering Indoor Wet Bulb Temperature																							
IDB	Airflow		59	63	67	71	59	63	67	71	59	63	67	71	59	63	67	71	59	63	67	71	59	63	67	71
80	1500	MBh	60.8	61.7	63.5	66.3	60.3	61.1	63.0	65.7	58.7	59.5	61.4	64.1	55.9	56.8	58.6	61.4	52.6	53.4	55.3	58.1	49.5	50.4	52.2	55.0
		S/T	1.00	0.72	0.58	0.4	1.00	0.72	0.59	0.4	1.00	0.75	0.61	0.5	1.00	1.00	0.63	0.5	1.00	1.00	0.65	0.5	1.00	1.00	0.71	0.6
		ΔT	28.99	27.17	23.75	20.2	28.94	27.12	23.70	20.2	29.20	27.37	23.96	20.4	28.93	27.10	23.68	20.1	28.68	26.85	23.44	19.9	29.83	28.00	24.58	21.0
		kW	3.56	3.55	3.54	3.6	3.97	3.97	3.96	4.0	4.44	4.44	4.43	4.5	4.95	4.95	4.94	5.0	5.51	5.51	5.50	5.5	6.18	6.18	6.17	6.2
		Amps	12.66	12.65	12.62	12.8	14.48	14.47	14.44	14.6	16.52	16.50	16.47	16.6	18.72	18.71	18.68	18.8	21.18	21.17	21.14	21.3	24.07	24.05	24.02	24.2
		Hi PR	260	261	263	267.3	301	302	304	308.5	344	345	347	351.7	391	392	394	398.2	441	442	444	448.3	494	495	497	501.8
		Lo PR	125	126	130	135.1	133	134	137	142.7	139	141	144	149.4	145	147	150	155.1	151	152	155	160.7	157	159	162	167.6
	1700	MBh	62.2	63.1	64.9	67.7	61.7	62.5	64.3	67.1	60.1	60.9	62.7	65.5	57.3	58.2	**60.0**	62.8	54.0	54.8	56.6	59.4	50.9	51.8	53.6	56.4
		S/T	1.00	0.86	0.72	0.6	1.00	0.86	0.73	0.6	1.00	0.89	0.75	0.6	1.00	1.00	**0.77**	0.6	1.00	1.00	0.79	0.6	1.00	1.00	0.84	0.7
		ΔT	26.74	24.91	21.49	18.0	26.69	24.86	21.44	17.9	26.94	25.12	21.70	18.2	26.67	24.84	**21.43**	17.9	26.42	24.60	21.18	17.6	27.57	25.74	22.33	18.8
		kW	3.60	3.60	3.59	3.6	4.02	4.02	4.01	4.0	4.49	4.48	4.48	4.5	4.99	4.99	**4.98**	5.0	5.56	5.56	5.55	5.6	6.22	6.22	6.21	6.2
		Amps	12.85	12.84	12.81	12.9	14.68	14.66	14.63	14.8	16.71	16.70	16.67	16.8	18.91	18.90	**18.87**	19.0	21.37	21.36	21.33	21.5	24.26	24.25	24.22	24.4
		Hi PR	264	265	267	271.6	305	306	308	312.8	348	350	351	356.0	395	396	**398**	402.5	445	446	448	452.6	499	500	502	506.1
		Lo PR	128	130	133	138.4	136	137	141	146.1	143	144	147	152.8	148	150	**153**	158.4	154	155	159	164.0	161	162	166	171.0
	1900	MBh	64.6	65.5	67.3	70.1	64.1	65.0	66.8	69.6	62.5	63.4	65.2	68.0	59.8	60.6	62.5	65.2	56.4	57.3	59.1	61.9	53.4	54.2	56.0	58.8
		S/T	1.00	0.90	0.76	0.6	1.00	0.91	0.77	0.6	1.00	1.00	0.80	0.7	1.00	1.00	0.82	0.7	1.00	1.00	0.84	0.7	1.00	1.00	1.00	0.7
		ΔT	24.78	22.95	19.54	16.0	24.73	22.90	19.49	16.0	24.99	23.16	19.75	16.2	24.71	22.89	19.47	15.9	24.47	22.64	19.23	15.7	25.61	23.79	20.37	16.8
		kW	3.64	3.63	3.63	3.7	4.06	4.05	4.05	4.1	4.53	4.52	4.51	4.5	5.03	5.03	5.02	5.1	5.60	5.59	5.59	5.6	6.26	6.26	6.25	6.3
		Amps	13.02	13.01	12.98	13.1	14.84	14.83	14.80	14.9	16.88	16.86	16.83	17.0	19.08	19.07	19.04	19.2	21.54	21.53	21.50	21.6	24.43	24.41	24.38	24.5
		Hi PR	269	270	272	276.6	310	311	313	317.8	353	355	356	361.0	400	401	403	407.4	450	451	453	457.6	504	505	507	511.1
		Lo PR	133	135	138	143.4	141	143	146	151.1	148	149	152	157.8	153	155	158	163.5	159	160	164	169.0	166	167	171	176.0
85	1500	MBh	61.8	62.7	64.5	67.3	61.3	62.2	64.0	66.8	59.7	60.6	62.4	65.2	57.0	57.8	59.6	62.4	53.6	54.5	56.3	59.1	50.5	51.4	53.2	56.0
		S/T	1.00	0.82	0.68	0.5	1.00	1.00	0.69	0.5	1.00	1.00	0.72	0.6	1.00	1.00	0.74	0.6	1.00	1.00	0.76	0.6	1.00	1.00	1.00	0.7
		ΔT	32.59	30.76	27.34	23.8	32.54	30.71	27.29	23.8	32.79	30.96	27.55	24.0	32.52	30.69	27.27	23.7	32.27	30.44	27.03	23.5	33.42	31.59	28.17	24.6
		kW	3.56	3.56	3.55	3.6	3.98	3.98	3.97	4.0	4.45	4.45	4.44	4.5	4.96	4.95	4.95	5.0	5.52	5.52	5.51	5.5	6.19	6.18	6.18	6.2
		Amps	12.70	12.68	12.65	12.8	14.52	14.50	14.47	14.6	16.55	16.54	16.51	16.6	18.76	18.74	18.71	18.8	21.22	21.20	21.17	21.3	24.10	24.09	24.06	24.2
		Hi PR	261	262	264	268.6	302	303	305	309.8	345	347	348	353.0	392	393	395	399.4	442	443	445	449.6	496	497	499	503.1
		Lo PR	127	128	132	136.9	134	136	139	144.6	141	143	146	151.3	147	148	152	157.0	152	154	157	162.5	159	161	164	169.5
	1700	MBh	63.2	64.1	65.9	68.7	62.7	63.5	65.4	68.2	61.1	61.9	63.8	66.6	58.3	59.2	61.0	63.8	55.0	55.9	57.7	60.5	51.9	52.8	54.6	57.4
		S/T	1.00	0.96	0.82	0.7	1.00	1.00	0.83	0.7	1.00	1.00	0.85	0.7	1.00	1.00	0.87	0.7	1.00	1.00	1.00	0.8	1.00	1.00	1.00	0.8
		ΔT	30.33	28.50	25.08	21.5	30.28	28.45	25.03	21.5	30.53	28.71	25.29	21.8	30.26	28.43	25.02	21.5	30.01	28.19	24.77	21.2	31.16	29.33	25.92	22.4
		kW	3.61	3.60	3.60	3.6	4.03	4.02	4.02	4.0	4.49	4.49	4.48	4.5	5.00	5.00	4.99	5.0	5.57	5.56	5.56	5.6	6.23	6.23	6.22	6.3
		Amps	12.89	12.87	12.84	13.0	14.71	14.70	14.67	14.8	16.75	16.73	16.70	16.8	18.95	18.93	18.90	19.0	21.41	21.40	21.36	21.5	24.30	24.28	24.25	24.4
		Hi PR	265	266	268	272.8	307	308	310	314.1	350	351	353	357.2	396	397	399	403.7	446	447	449	453.8	500	501	503	507.3
		Lo PR	130	132	135	140.3	138	139	143	147.9	145	146	149	154.6	150	152	155	160.3	156	157	161	165.9	163	164	167	172.9
	1900	MBh	65.7	66.5	68.4	71.1	65.1	66.0	67.8	70.6	63.5	64.4	66.2	69.0	60.8	61.7	63.5	66.3	57.4	58.3	60.1	62.9	54.4	55.2	57.1	59.9
		S/T	1.00	1.00	0.87	0.7	1.00	1.00	0.87	0.7	1.00	1.00	0.90	0.8	1.00	1.00	1.00	0.8	1.00	1.00	1.00	0.8	1.00	1.00	1.00	0.8
		ΔT	28.37	26.54	23.13	19.6	28.32	26.49	23.08	19.5	28.58	26.75	23.34	19.8	28.30	26.48	23.06	19.5	28.06	26.23	22.82	19.3	29.20	27.38	23.96	20.4
		kW	3.65	3.64	3.64	3.7	4.07	4.06	4.05	4.1	4.53	4.53	4.52	4.6	5.04	5.04	5.03	5.1	5.61	5.60	5.59	5.6	6.27	6.27	6.26	6.3
		Amps	13.06	13.04	13.01	13.1	14.88	14.86	14.83	15.0	16.91	16.90	16.87	17.0	19.12	19.10	19.07	19.2	21.58	21.56	21.53	21.7	24.46	24.45	24.42	24.6
		Hi PR	270	271	273	277.8	311	313	314	319.0	355	356	358	362.2	401	402	404	408.7	451	452	454	458.8	505	506	508	512.3
		Lo PR	135	137	140	145.3	143	144	148	153.0	150	151	154	159.7	155	157	160	165.4	161	162	166	170.9	168	169	173	177.9

IDB: Entering Indoor Dry Bulb Temperature

Shaded area reflects AHRI conditions.

kW = Total system power

High and low pressures are measured at the liquid and suction access fittings.

Amps = outdoor unit amps (comp.+fan)

DP5HM2431 **100% Capacity**

	OUTDOOR AMBIENT TEMPERATURE																
	65	60	55	50	47	45	40	35	30	25	20	17	15	10	5	0	-5
MBh	29.56	27.61	25.69	23.81	22.60	21.70	19.42	17.33	15.62	14.35	13.41	12.90	12.25	10.64	9.02	7.40	5.79
T/R	32.90	31.02	29.15	27.28	26.16	25.11	22.48	20.06	18.08	16.61	15.52	14.93	14.18	12.31	10.44	8.57	6.70
KW	1.87	1.86	1.84	1.83	1.82	1.81	1.80	1.79	1.77	1.76	1.74	1.73	1.73	1.71	1.70	1.69	1.67
AMPS	6.9	6.8	6.7	6.7	6.6	6.6	6.6	6.5	6.4	6.4	6.3	6.3	6.2	6.2	6.1	6.1	6.0
COP	4.63	4.36	4.09	3.82	3.64	3.51	3.16	2.84	2.58	2.39	2.25	2.18	2.08	1.82	1.55	1.29	1.01
Hi PR	373	361	348	336	329	324	312	300	288	276	264	256	252	239	227	215	203
LO PR	138	130	121	112	107	104	95	87	78	69	61	56	52	44	35	26	18

DP5HM3031 **100% Capacity**

	OUTDOOR AMBIENT TEMPERATURE																
	65	60	55	50	47	45	40	35	30	25	20	17	15	10	5	0	-5
MBh	37.04	34.68	32.35	30.07	28.60	27.53	24.78	22.25	20.17	18.64	17.51	16.90	16.12	14.17	12.22	10.27	8.32
T/R	33.66	31.81	29.97	28.13	27.02	26.01	23.42	21.02	19.06	17.61	16.54	15.97	15.23	13.39	11.55	9.70	7.86
KW	2.48	2.44	2.40	2.36	2.34	2.33	2.29	2.25	2.21	2.18	2.14	2.12	2.10	2.06	2.03	1.99	1.95
AMPS	9.2	9.0	8.9	8.7	8.6	8.6	8.4	8.2	8.1	7.9	7.7	7.6	7.6	7.4	7.3	7.1	6.9
COP	4.38	4.17	3.95	3.73	3.58	3.47	3.17	2.90	2.67	2.51	2.40	2.34	2.25	2.01	1.77	1.51	1.25
Hi PR	415	402	388	375	367	361	348	334	321	307	294	286	280	267	253	240	226
LO PR	137	129	120	112	107	103	95	86	78	69	61	55	52	43	35	26	18

DP5HM3031 **70% Capacity**

	OUTDOOR AMBIENT TEMPERATURE																
	65	60	55	50	47	45	40	35	30	25	20	17	15	10	5	0	-5
MBh	27.40	25.53	23.72	21.83	20.63	19.69	17.37	15.27	13.57	12.29	11.31	10.79	10.13	8.49	6.85	5.21	3.57
T/R	36.14	33.90	31.67	29.44	28.10	26.82	23.65	20.80	18.48	16.73	15.40	14.69	13.80	11.56	9.33	7.10	4.86
KW	1.52	1.47	1.43	1.38	1.35	1.33	1.29	1.24	1.20	1.15	1.11	1.08	1.06	1.02	0.97	0.93	0.88
AMPS	5.5	5.3	5.1	4.9	4.8	4.7	4.5	4.3	4.1	3.9	3.7	3.6	3.5	3.3	3.1	3.0	2.8
COP	5.30	5.09	4.88	4.64	4.47	4.32	3.95	3.60	3.32	3.12	2.99	2.93	2.79	2.45	2.07	1.65	1.19
Hi PR	402	389	376	363	355	350	337	324	311	298	285	277	272	258	245	232	219
LO PR	135	127	118	110	105	101	93	85	76	68	59	54	51	43	34	26	17

DP5HM3631 **100% Capacity**

	OUTDOOR AMBIENT TEMPERATURE																
	65	60	55	50	47	45	40	35	30	25	20	17	15	10	5	0	-5
MBh	44.84	42.23	39.66	37.14	35.50	34.31	31.43	28.59	26.32	24.64	23.44	22.80	21.95	19.84	17.72	15.60	13.49
T/R	33.27	31.64	30.01	28.37	27.39	26.53	24.25	22.08	20.30	19.01	18.09	17.59	16.94	15.31	13.67	12.04	10.41
KW	2.83	2.84	2.84	2.84	2.84	2.84	2.85	2.85	2.85	2.85	2.85	2.86	2.86	2.86	2.86	2.86	2.87
AMPS	10.4	10.4	10.4	10.4	10.5	10.5	10.5	10.5	10.5	10.5	10.5	10.5	10.5	10.5	10.5	10.5	10.6
COP	4.64	4.36	4.09	3.83	3.66	3.54	3.24	2.94	2.71	2.53	2.41	2.34	2.25	2.03	1.82	1.60	1.38
Hi PR	406	393	380	367	359	354	340	327	314	301	288	280	274	261	248	235	221
LO PR	136	128	119	111	106	102	94	85	77	68	60	55	51	43	34	26	18

DP5HM3631 **70% Capacity**

	OUTDOOR AMBIENT TEMPERATURE																
	65	60	55	50	47	45	40	35	30	25	20	17	15	10	5	0	-5
MBh	33.53	31.31	29.13	26.98	25.61	24.58	21.98	19.60	17.66	16.21	15.14	14.56	13.82	11.98	10.14	8.29	6.45
T/R	36.19	34.12	32.05	29.99	28.74	27.59	24.67	22.00	19.82	18.20	16.99	16.34	15.51	13.44	11.37	9.31	7.24
KW	1.75	1.72	1.69	1.66	1.64	1.63	1.60	1.57	1.54	1.51	1.48	1.46	1.45	1.42	1.39	1.35	1.32
AMPS	6.3	6.2	6.0	5.9	5.8	5.8	5.6	5.5	5.4	5.2	5.1	5.0	5.0	4.8	4.7	4.6	4.4
COP	5.61	5.33	5.05	4.76	4.57	4.42	4.03	3.66	3.36	3.15	3.00	2.93	2.80	2.48	2.14	1.79	1.43
Hi PR	394	381	368	356	348	343	330	317	304	291	279	271	266	253	240	227	215
LO PR	134	125	117	109	104	100	92	84	75	67	59	54	51	42	34	26	17

DP5HM4231 **100% Capacity**

	OUTDOOR AMBIENT TEMPERATURE																
	65	60	55	50	47	45	40	35	30	25	20	17	15	10	5	0	-5
MBh	53.62	50.09	46.61	43.19	41.00	39.36	35.23	31.43	28.34	26.04	24.32	23.40	22.23	19.29	16.36	13.43	10.49
T/R	37.45	35.32	33.19	31.05	29.78	28.59	25.58	22.83	20.58	18.91	17.66	16.99	16.14	14.01	11.88	9.75	7.62
KW	3.44	3.41	3.38	3.35	3.34	3.33	3.30	3.27	3.25	3.22	3.19	3.18	3.16	3.14	3.11	3.08	3.06
AMPS	12.9	12.8	12.7	12.6	12.5	12.4	12.3	12.2	12.1	12.0	11.9	11.8	11.7	11.6	11.5	11.4	11.3
COP	4.57	4.31	4.04	3.77	3.60	3.47	3.13	2.82	2.56	2.37	2.23	2.16	2.06	1.80	1.54	1.28	1.01
Hi PR	414	400	387	373	365	360	346	333	319	306	292	284	279	266	252	239	225
LO PR	130	122	114	106	101	98	90	82	73	65	57	52	49	41	33	25	17

Calculations are based on nominal CFM and 70 °F indoor dry bulb.
Note: Shaded area is AHRI Rating Conditions at 47°F outdoor ambient temperature

Amps = Outdoor unit amps (comp.+fan)
kW = Total system power

DP5HM4231 **70% Capacity**

	OUTDOOR AMBIENT TEMPERATURE																
	65	60	55	50	47	45	40	35	30	25	20	17	15	10	5	0	-5
MBh	39.29	36.60	34.15	31.35	29.58	28.17	24.71	21.61	19.09	17.18	15.72	14.94	13.96	11.52	9.08	6.64	4.20
T/R	35.52	33.26	31.00	28.74	27.39	26.08	22.88	20.00	17.67	15.91	14.56	13.83	12.93	10.67	8.41	6.15	3.89
KW	2.11	2.06	2.01	1.96	1.93	1.91	1.86	1.81	1.75	1.70	1.65	1.62	1.60	1.55	1.50	1.45	1.40
AMPS	7.6	7.4	7.2	6.9	6.8	6.7	6.5	6.3	6.0	5.8	5.6	5.5	5.4	5.2	4.9	4.7	4.5
COP	5.45	5.20	4.98	4.69	4.50	4.33	3.90	3.51	3.19	2.96	2.79	2.70	2.56	2.18	1.78	1.35	0.88
Hi PR	401	388	375	362	354	349	336	323	310	296	283	276	270	257	244	231	218
LO PR	128	120	112	104	99	96	88	80	72	64	56	51	48	40	32	24	16

DP5HM4831 **100% Capacity**

	OUTDOOR AMBIENT TEMPERATURE																
	65	60	55	50	47	45	40	35	30	25	20	17	15	10	5	0	-5
MBh	54.12	50.44	46.82	43.27	41.00	39.27	34.94	30.99	27.78	25.38	23.57	22.60	21.37	18.31	15.24	12.17	9.11
T/R	30.60	28.79	26.99	25.19	24.10	23.09	20.54	18.22	16.33	14.92	13.86	13.29	12.57	10.76	8.96	7.16	5.35
KW	3.31	3.29	3.27	3.24	3.23	3.22	3.20	3.18	3.15	3.13	3.11	3.10	3.09	3.06	3.04	3.02	3.00
AMPS	11.9	11.8	11.7	11.6	11.5	11.5	11.4	11.3	11.2	11.1	11.0	11.0	10.9	10.8	10.7	10.6	10.5
COP	4.79	4.50	4.20	3.91	3.72	3.57	3.20	2.86	2.58	2.38	2.22	2.14	2.03	1.75	1.47	1.18	0.89
Hi PR	384	372	359	347	339	334	322	309	297	284	272	264	259	247	234	222	209
LO PR	131	122	114	106	101	98	90	82	74	66	57	53	49	41	33	25	17

DP5HM4831 **70% Capacity**

	OUTDOOR AMBIENT TEMPERATURE																
	65	60	55	50	47	45	40	35	30	25	20	17	15	10	5	0	-5
MBh	39.29	36.60	34.18	31.40	29.58	28.11	24.52	21.32	18.73	16.76	15.24	14.43	13.42	10.89	8.37	5.84	3.32
T/R	31.83	29.75	27.67	25.59	24.35	23.14	20.18	17.55	15.41	13.79	12.54	11.88	11.04	8.97	6.89	4.81	2.73
KW	2.04	1.99	1.94	1.89	1.87	1.85	1.80	1.75	1.70	1.66	1.61	1.58	1.56	1.51	1.47	1.42	1.37
AMPS	7.1	6.9	6.7	6.5	6.3	6.2	6.0	5.8	5.6	5.4	5.2	5.1	5.0	4.8	4.6	4.4	4.2
COP	5.65	5.39	5.16	4.86	4.65	4.46	3.99	3.57	3.22	2.96	2.78	2.68	2.52	2.11	1.67	1.21	0.71
Hi PR	372	360	348	336	329	324	312	300	287	275	263	256	251	239	227	215	203
LO PR	128	120	112	104	100	96	88	80	72	64	56	52	48	40	32	25	17

DP5HM6031 **100% Capacity**

	OUTDOOR AMBIENT TEMPERATURE																
	65	60	55	50	47	45	40	35	30	25	20	17	15	10	5	0	-5
MBh	76.34	71.48	66.71	62.01	59.00	56.80	51.18	45.97	41.71	38.56	36.24	35.00	33.40	29.40	24.00	20.33	16.53
T/R	34.86	32.96	31.06	29.16	28.02	26.97	24.30	21.83	19.81	18.31	17.21	16.62	15.86	13.96	12.06	10.16	8.26
KW	4.82	4.74	4.67	4.60	4.55	4.52	4.45	4.37	4.30	4.22	4.15	4.10	4.07	4.00	3.52	3.48	3.42
AMPS	17.9	17.5	17.2	16.9	16.7	16.6	16.2	15.9	15.6	15.3	14.9	14.7	14.6	14.3	12.5	12.0	11.7
COP	4.64	4.42	4.19	3.96	3.80	3.68	3.37	3.08	2.84	2.68	2.56	2.50	2.40	2.15	2.00	1.71	1.42
Hi PR	383	370	358	345	338	333	321	308	296	283	271	263	258	246	233	221	208
LO PR	137	128	120	111	106	103	94	86	77	69	60	55	52	43	35	26	18

DP5HM6031 **70% Capacity**

	OUTDOOR AMBIENT TEMPERATURE																
	65	60	55	50	47	45	40	35	30	25	20	17	15	10	5	0	-5
MBh	56.53	52.67	48.91	45.03	42.56	40.64	35.86	-	-	-	-	-	-	-	-	-	-
T/R	38.08	35.73	33.39	31.04	29.63	28.29	24.97	-	-	-	-	-	-	-	-	-	-
KW	2.95	2.86	2.77	2.68	2.63	2.59	2.50	-	-	-	-	-	-	-	-	-	-
AMPS	10.7	10.3	9.9	9.6	9.3	9.2	8.8	-	-	-	-	-	-	-	-	-	-
COP	5.62	5.40	5.17	4.92	4.75	4.59	4.20	-	-	-	-	-	-	-	-	-	-
Hi PR	371	359	347	335	328	323	311	-	-	-	-	-	-	-	-	-	-
LO PR	134	126	117	109	104	101	92	-	-	-	-	-	-	-	-	-	-

Calculations are based on nominal CFM and 70 °F indoor dry bulb.

Note: Shaded area is AHRI Rating Conditions at 47°F outdoor ambient temperature

Amps = Outdoor unit amps (comp.+fan)

kW = Total system power

Model and Heat Kit Usage	Circuit #1		Circuit #2		Single-Point Kit		Actual kW
	MCA[1]	MOP[2]	MCA[1]	MOP[2]	MCA[1]	MOP[2]	
DP5HM2431							
HKTPD051	24.7	25	-	-	43.18	45	4.75
HKTPD081	36.5	40	-	-	54.98	60	7
HKTPD101	49.5	50	-	-	67.98	70	9.5
DP5HM3031							
HKTPD051	24.7	25	-	-	46.22	50	4.75
HKTPD081	36.5	40	-	-	58.02	60	7
HKTPD101	49.5	50	-	-	71.02	80	9.5
HKTPD151	49.5	50	24.7	25	95.72	100	14.25
DP5HM3631							
HKTPD051	24.7	25	-	-	54.46	60	4.75
HKTPD081	36.5	40	-	-	66.26	70	7
HKTPD101	49.5	50	-	-	79.26	80	9.5
HKTPD151	49.5	50	24.7	25	103.96	110	14.25
DP5HM4231							
HKTPD051	24.7	25	-	-	60.54	70	4.75
HKTPD081	36.5	40	-	-	72.34	80	7
HKTPD101	49.5	50	-	-	85.34	90	9.5
HKTPD151	49.5	50	24.7	25	110.04	125	14.25
DP5HM4831							
HKTPD051	24.7	25	-	-	61.14	70	4.75
HKTPD081	36.5	40	-	-	72.94	80	7
HKTPD101	49.5	50	-	-	85.94	90	9.5
HKTPD151	49.5	50	24.7	25	110.64	125	14.25
HKTPD191	49.5	50	49.5	50	135.44	150	19
DP5HM6031							
EHXD-1S05A	-	-	-	-	70.3	90	5
EHXD-1S10A	-	-	-	-	96.3	110	10
EHXD-1S15A	-	-	-	-	122	125	15
EHXD-1S20A	-	-	-	-	148	150	20

[1] Minimum Circuit Ampacity

[2] Maximum Overcurrent Protection Device

Heating kW Correction Factor					
Supply Votage	**240**	**230**	**220**	**210**	**208**
Correction Factor	**1.0**	**0.93**	**0.85**	**0.78**	**0.76**

Multiply rated kW by correction factor to get actual kW

DP5HM2431

Cooling/ HP Speed	Adjust Tap	CFM*	Electric Heat	Adjust Tap	CFM*
A	Minus	698	A	Minus	698
	Normal	775		Normal	775
	Plus	853		Plus	853
B	Minus	788	B	Minus	788
	Normal**	875		Normal	875
	Plus	963		Plus	963
C	Minus	878	C	Minus	878
	Normal	975		Normal	975
	Plus	1073		Plus	1073
D	Minus	968	D	Minus	968
	Normal	1075		Normal	1075
	Plus	1183		Plus	1183

* - @ 0.1 - 0.8 ESP ** - Rated Cooling Speed

The Electric Heat airflow should not be less than the Cooling airflow selected during install.

DP5HM3031

Cooling/ HP Speed	Adjust Tap	CFM*	Electric Heat	Adjust Tap	CFM*
A	Minus	855	A	Minus	855
	Normal	950		Normal	950
	Plus	1045		Plus	1045
B	Minus	945	B	Minus	945
	Normal**	1050		Normal	1050
	Plus	1155		Plus	1155
C	Minus	1035	C	Minus	1035
	Normal	1150		Normal	1150
	Plus	1265		Plus	1265
D	Minus	1125	D	Minus	1125
	Normal	1250		Normal	1250
	Plus	1375		Plus	1375

* - @ 0.1 - 0.8 ESP ** - Rated Cooling Speed

The Electric Heat airflow should not be less than the Cooling airflow selected during install.

DP5HM3631

Cooling/ HP Speed	Adjust Tap	CFM*	Electric Heat	Adjust Tap	CFM*
A	Minus	990	A	Minus	990
	Normal	1100		Normal	1100
	Plus	1210		Plus	1210
B	Minus	1080	B	Minus	1080
	Normal**	1200		Normal	1200
	Plus	1320		Plus	1320
C	Minus	1170	C	Minus	1170
	Normal	1300		Normal	1300
	Plus	1430		Plus	1430
D	Minus	1260	D	Minus	1260
	Normal	1400		Normal	1400
	Plus	1540		Plus	1540

* - @ 0.1 - 0.8 ESP ** - Rated Cooling Speed

The Electric Heat airflow should not be less than the Cooling airflow selected during install.

DP5HM4231

Cooling/ HP Speed	Adjust Tap	CFM*	Electric Heat	Adjust Tap	CFM*
A	Minus	1080	A	Minus	1080
	Normal	1200		Normal	1200
	Plus	1320		Plus	1320
B	Minus	1170	B	Minus	1170
	Normal**	1300		Normal	1300
	Plus	1430		Plus	1430
C	Minus	1260	C	Minus	1260
	Normal	1400		Normal	1400
	Plus	1540		Plus	1540
D	Minus	1350	D	Minus	1350
	Normal	1500		Normal	1500
	Plus	1650		Plus	1650

* - @ 0.1 - 0.8 ESP ** - Rated Cooling Speed

The Electric Heat airflow should not be less than the Cooling airflow selected during install.

DP5HH2431

Cooling/ HP Speed	Adjust Tap	CFM*	Electric Heat	Adjust Tap	CFM*
A	Minus	990	A	Minus	990
	Normal	1100		Normal	1100
	Plus	1210		Plus	1210
B	Minus	1080	B	Minus	1080
	Normal**	1200		Normal	1200
	Plus	1320		Plus	1320
C	Minus	1170	C	Minus	1170
	Normal	1300		Normal	1300
	Plus	1430		Plus	1430
D	Minus	1260	D	Minus	1260
	Normal	1400		Normal	1400
	Plus	1540		Plus	1540

* - @ 0.1 - 0.8 ESP ** - Rated Cooling Speed

The Electric Heat airflow should not be less than the Cooling airflow selected during install.

DP5HM6031

Horizontal Flow

Motor Tap	External Static Pressure in w.c.	SCFM	RPM	BHP
T1	0.2	1372	665	0.20
	0.4	1259	734	0.23
	0.6	1133	813	0.25
	0.8	1016	888	0.27
T2	0.2	2176	878	0.69
	0.4	2080	939	0.74
	0.6	1973	1000	0.79
	0.8	1887	1048	0.83
T3	0.2	2176	878	0.69
	0.4	2080	939	0.74
	0.6	1973	1000	0.79
	0.8	1887	1048	0.83
T4	0.2	2234	960	0.86
	0.4	2162	1003	0.9
	0.6	2101	1042	0.83
	0.8	2053	1073	0.96
T5	0.2	2300	982	0.93
	0.4	2222	1025	0.98
	0.6	2170	1061	1.01
	0.8	2120	1095	1.04

Downflow

Motor Tap	External Static Pressure in w.c.	SCFM	RPM	BHP
T1	0.2	1380	664	0.20
	0.4	1262	735	0.23
	0.6	1132	811	0.25
	0.8	1006	884	0.27
T2	0.2	2145	902	0.71
	0.4	2056	952	0.75
	0.6	1967	1003	0.79
	0.8	1890	1051	0.83
T3	0.2	2145	902	0.71
	0.4	2056	952	0.75
	0.6	1976	1003	0.79
	0.8	1890	1051	0.83
T4	0.2	2293	950	0.85
	0.4	2195	995	0.89
	0.6	2112	1042	0.93
	0.8	2034	1088	0.97
T5	0.2	2364	971	0.92
	0.4	2274	1019	0.97
	0.6	2190	1063	1.01
	0.8	2113	1110	1.06

Notes

- Airflow below 1500 SCFM (300 SCFM/ton) is not recommended for High Stage cooling or heating

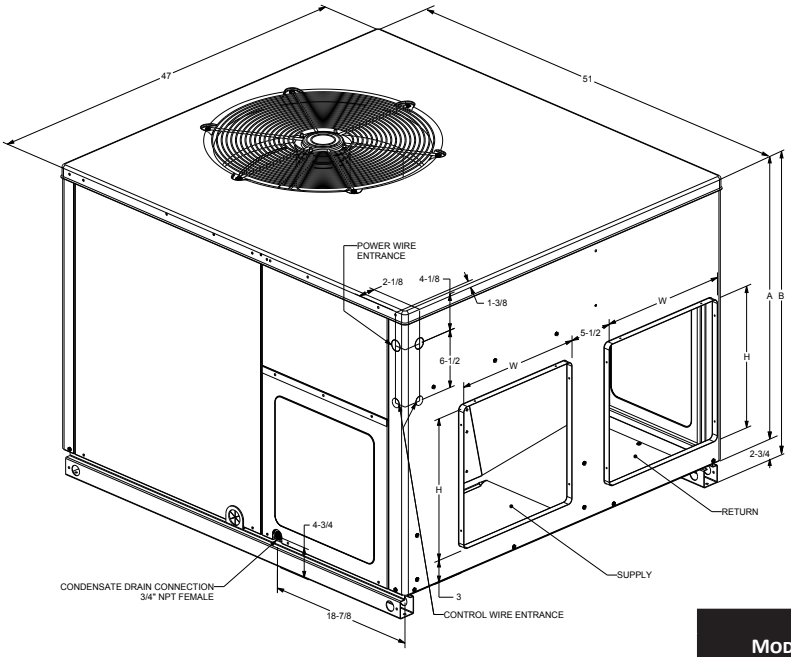

Model	Unit Dimensions (Inches)				Chassis Size
			Height		
	W	D	A	B	
DP5HM2431	47	51	32	34¾	Medium
DP5HM3031	47	51	32	34¾	Medium
DP5HM3631	47	51	40	42¾	Large
DP5HM4231	47	51	40	42¾	Large
DP5HM4831	47	51	40	42¾	Large
DP5HM6031	73⅜	47⅝	39	43¾	X-Large

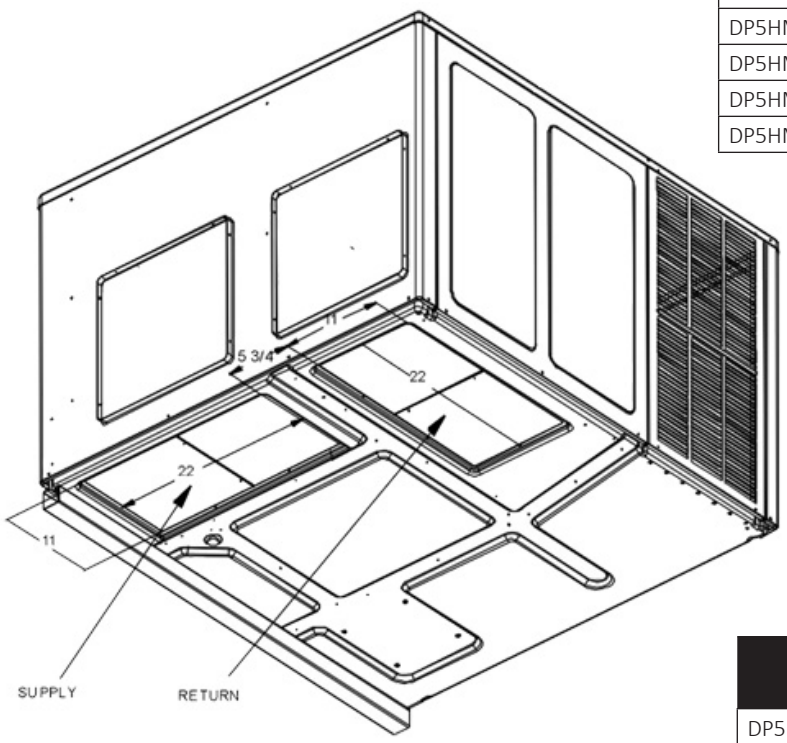

Model	Duct Openings			
	Supply		Return	
	W	H	W	H
DP5HM2431	16	16	16	16
DP5HM3031	16	16	16	16
DP5HM3631	16	18	16	18
DP5HM4231	16	18	16	18
DP5HM4831	16	18	16	18
DP5HM6031	17	12	11	25

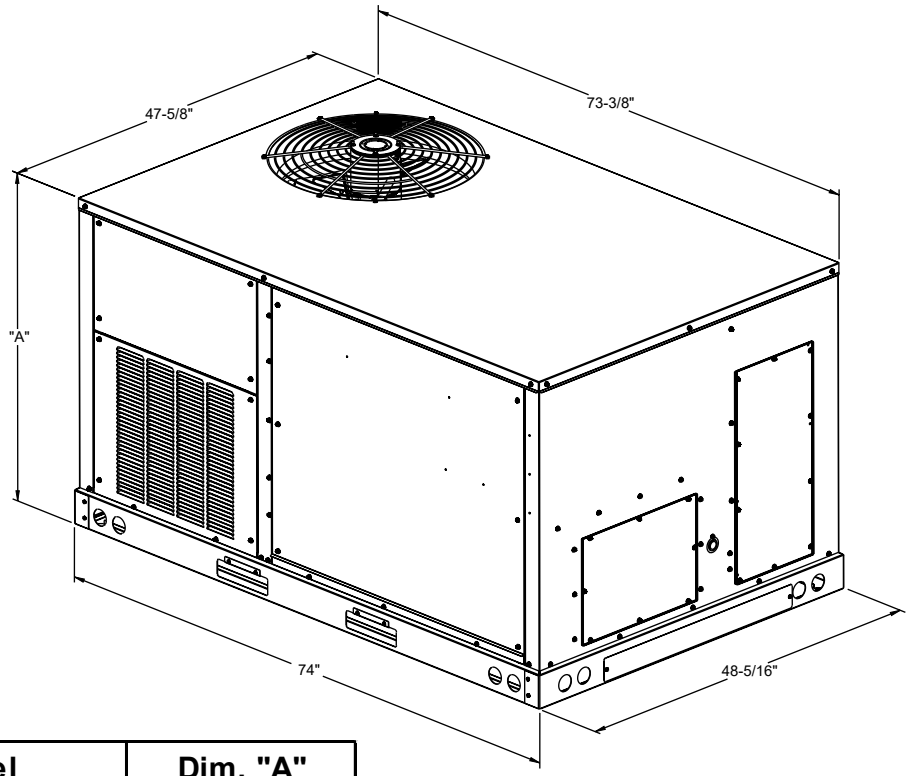

Model	Dim. "A"
5 Ton Heat Pump	43-1/2"

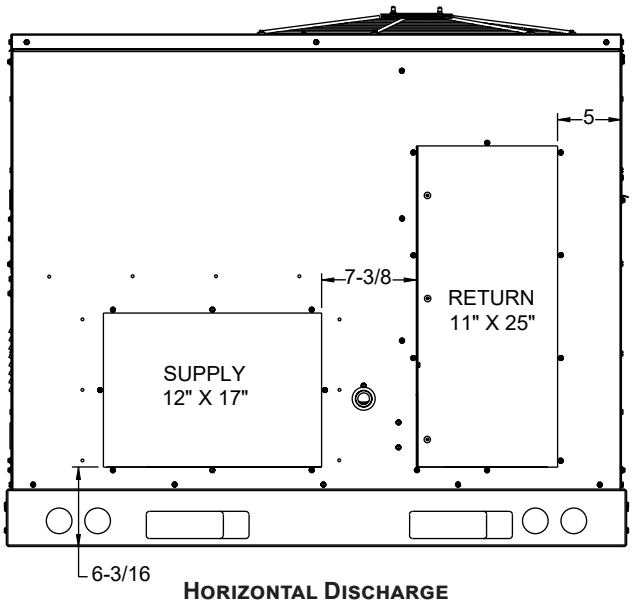

Horizontal Discharge

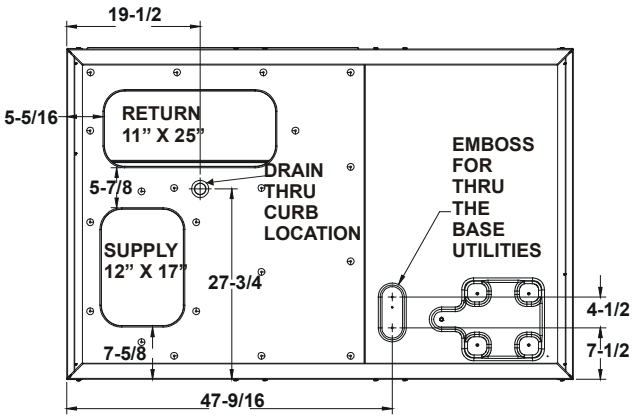

BOTTOM VIEW OF UNIT

Vertical Discharge

Provisions for forks have been included in the unit base frame. No other fork locations are approved.

- Unit must be lifted by the four lifting holes located at the base frame corners.
- Lifting cables should be attached to the unit with shackles.
- The distance between the crane hook and the top of the unit must not be less than 60”.
- Two spreader bars must span over the unit to prevent damage to the cabinet by the lift cables. Spreader bars must be of sufficient length so that cables do not come in contact with the unit during transport. Remove wood struts mounted beneath unit base frame before setting unit on roof curb. These struts are intended to protect unit base frame from fork lift damage. To remove the struts, extract the sheet metal retainers and pull the struts through the base of the unit. Refer to rigging label on the unit.

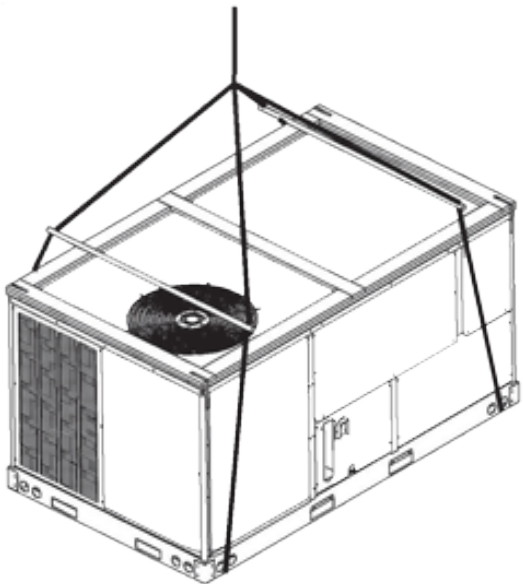

Important: If using bottom discharge with roof curb, duct-work should be attached to the curb prior to installing the unit. Duct-work dimensions are shown in Roof Curb Installation Instructions Manual.

Refer to the Roof Curb Installation Instructions for proper curb installation. Curbing must be installed in compliance with the National Roofing Contractors Association Manual.

Lower unit carefully onto roof mounting curb. While rigging the unit, the center of gravity will cause the condenser end to be lower than the supply air end.

Bring condenser end of unit into alignment with the curb. With condenser end of the unit resting on curb member and using curb as a fulcrum, lower opposite end of the unit until entire unit is seated on the curb. When a rectangular cantilever curb is used, take care to center the unit. Check for proper alignment and orientation of supply and return openings with duct.

To assist in determining rigging requirements, unit weights are shown below.

Curb installations must comply with local codes and should follow the established guidelines of the National Roofing Contractors Association.

Proper unit installation requires that the roof curb be firmly and permanently attached to the roof structure. Check for adequate fastening method prior to setting the unit on the curb.

Full perimeter roof curbs are available from the factory and are shipped unassembled. The installing contractor is responsible for field assembly, squaring, leveling, and mounting on the roof structure. All required hardware necessary for the assembly of the sheet metal curb is included in the curb accessory package.

- Determine sufficient structural support before locating and mounting the curb and package unit.
- Duct-work must be constructed using industry guidelines. The duct-work must be placed into the roof curb before mounting the package unit. Our full perimeter curbs include duct connection frames to be assembled with the curb. Cantilevered-type curbs are not available from the factory.
- Contractor furnishes curb insulation, cant strips, flashing, and general roofing material.
- Support curbs on parallel sides with roof members. To prevent damage to the unit, the roof members cannot penetrate supply and return duct openings.

Note: The unit and curb accessories are designed to allow vertical duct installation before unit placement. Duct installation after unit placement is not recommended.

See the manual shipped with the roof curb for assembly and installation instructions.

Corner & Center-of-Gravity Locations

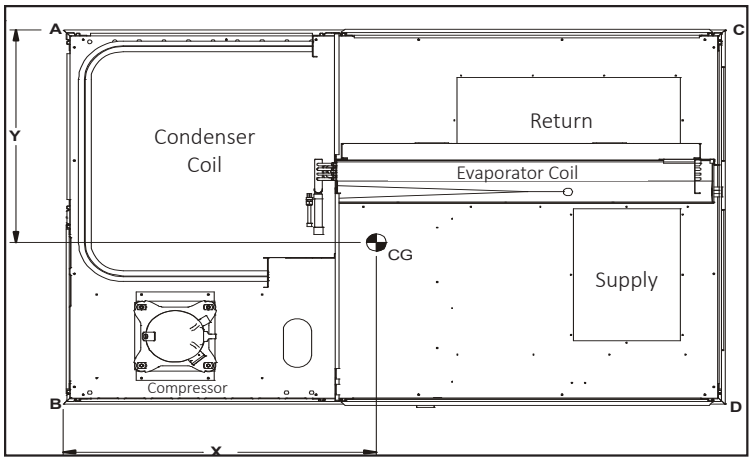

Model	X (In)	Y (In)	Shipping Weight (Lbs)	Operating Weight (Lbs)
DP5HM6031	33.5	27.6	688	630

Model	Corner Weights (Lbs.)			
	A	B	C	D
DP5HM6031	150	194	165	121

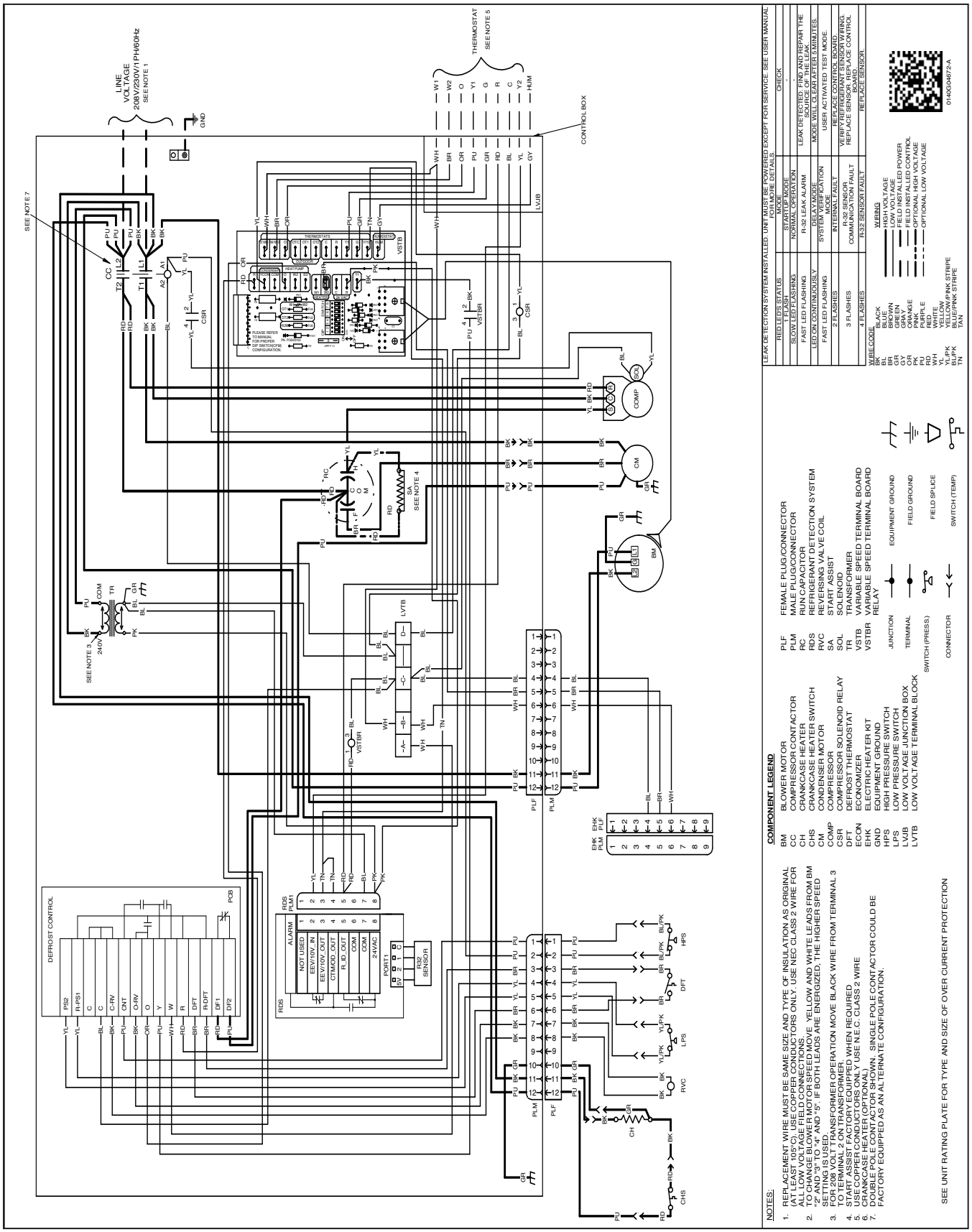

Wiring is subject to change. Always refer to the wiring diagram on the unit for the most up-to-date wiring.

⚠ WARNING

High Voltage: Disconnect all power before servicing or installing this unit. Multiple power sources may be present. Failure to do so may cause property damage, personal injury, or death. ⚡

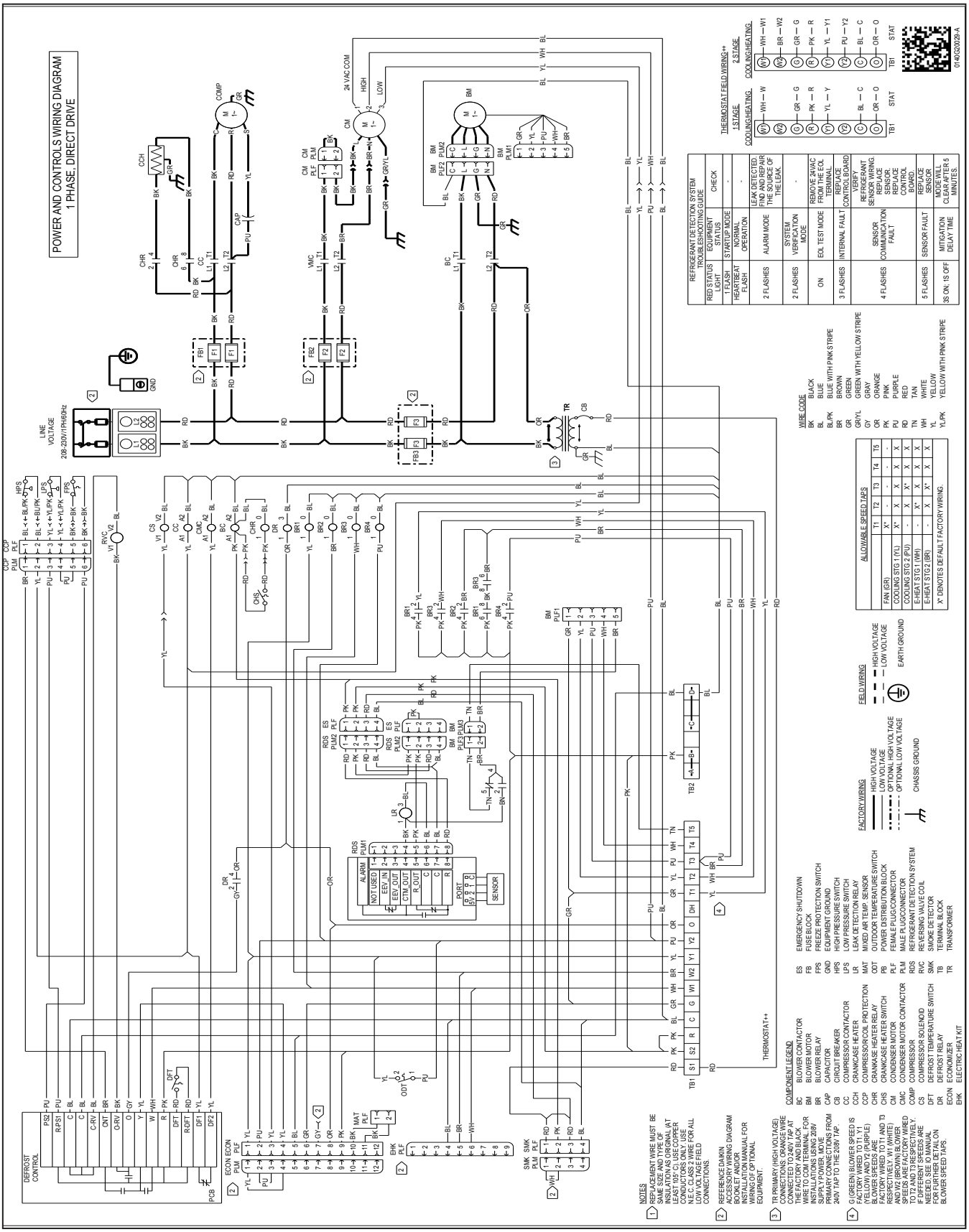

Wiring is subject to change. Always refer to the wiring diagram on the unit for the most up-to-date wiring.

⚠ WARNING — ***High Voltage:*** Disconnect all power before servicing or installing this unit. Multiple power sources may be present. Failure to do so may cause property damage, personal injury, or death. ⚡

For DP5HM(24-48)31 Models

Accessory Description	Item Number	
	Medium Chassis	Large Chassis
Concentric Kit	CDK36	CDK4872
Downflow Economizer**	DDNECNJPCHMM	DDNECNJPCHML
Downflow Internal Filter Rack	DDNIFRPCHMM	DDNIFRPCHML
Downflow Manual Damper	PGMDD101/102	PGMDD103
Downflow Motorized Damper	PGMDMD101/102	PGMDMD103
Downflow Square to Round	SQRPG101/102	SQRPG103
Horizontal Duct Cover*	20464501NGK	20464502NGK
Downflow Conversion Kit**	DWNFLWCONV	DWNFLWCONV
Economizer Wiring Harness***	0259L00411	0259L00411
External Horizontal Filter Rack	DPHFRA	DPHFRA
Horizontal Duct Cover	20464501PDGK	20464502PDGK
Horizontal Economizer	DHZECNJPGCHM	DHZECNJPGCHL
Horizontal Manual Damper	PGMDH102	PGMDH103
Horizontal Motorized Damper	PGMDMH102	PGMDMH103
Horizontal Square to Round	SQRPGH102	SQRPGH103
Outdoor Thermostat Kit w/ Lockout Stat	OT18-60A	OT18-60A
Outdoor Thermostat Kit (Only for GPHM5(24,30)31	OTHPPKG-01	-
Roof Curb	D14CRBPGCHMA	D14CRBPGCHMA

*Required for all downflow installations.
**Either a "Downflow Economizer" or a "Downflow Conversion Kit" is mandatory for all downflow installations.
***Required for installation of Economizers.

For DP5HM6031 Model

Item #	Description
0221L00014	14" Roof Curb
0270L01166	25% Manual Fresh Air Damper
0270L01165	25% Motorized Fresh Air Damper
0270L01338	Concentric Duct Adapter Kit 18"
0270L01753	Downflow Low-Leak Economizer Enthalpy
0270L01755	Downflow Ultra Low-Leak Economizer Enthalpy
0270L01757	Horizontal Ultra Low-Leak Economizer Enthalpy
EHXD-1S**	Electric Heat Kits
0270L01250	Hurricane Restraint Clips (for 0221L00014 Roof Curb)
0270L01261	Hurricane Restraint Clips

Our continuing commitment to quality products may mean a change in specifications without notice.
©2026 DAIKIN COMFORT TECHNOLGIES MANUFACTURING, L.P. • Houston, Texas • Printed in the USA.