DAIKIN

DP14GM

Cooling Capacity: 23,000 – 57,000 BTU/h
Heating Capacity: 40,000 – 120,000 BTU/h

Packaged Gas / Electric
14 SEER / 81% AFUE
2 to 5 TONS

Contents

Nomenclature 2
Accessories 2
Product Specifications 3
Expanded Cooling Data 8
Airflow Data 32
Dimensions 36
Wiring Diagrams 37

Standard Features

- Heavy-duty stainless-steel heat exchanger
- Energy-efficient compressor
- All-aluminum evaporator coil
- Flowrater expansion device on 2- to 4-ton units TXV expansion device on 5-ton units
- Multi-speed ECM blower motor
- Redundant gas valve with easy conversion to propane
- Power-assisted combustion
- Direct spark ignition system includes a microprocessor-based control for the entire ignition sequence, all blower operation, and all safety circuits complete with self-diagnostics
- This furnace does not comply with the SCAQMD Rule 1111 14 ng/J NOx emission limit and therefore is not eligible for installation in California's South Coast Air Quality Management District (SCAQMD). This furnace may be installed in SJVAPCD until 4/1/2022 provided the date of manufacture is September 30, 2021 or earlier and the emission fees are paid.
- All models comply with California Low NO_X standards.
- AHRI Certified; ETL Listed

Cabinet Features

- Fully insulated heavy-gauge, zinc-coated steel cabinet with UV-resistant powder-paint finish
- Horizontal or downflow application
- Aluminum foil-facing internal insulation reinforced with fiberglass scrim
- Compressor sound blanket
- Convenient access panels
- One roof curb fits all units
- One foot print: two heights
- Bottom, 2" high base rails for easier handling
- One footprint; two heights
- When properly anchored, meets the 2017 Florida Building Code unit integrity requirements for hurricane-type winds (Anchor bracket kits available.)

* Complete Warranty details available from your local dealer or at www.daikincomfort.com. To receive the Lifetime Heat Exchanger Warranty (good for as long as you own your home), and 12-year Parts Limited Warranty, online registration must be completed within 60 days of installation. Additional requirements for annual maintenance are required for the Unit Replacement Limited Warranty. Online registration and some of the additional requirements are not required in California or Québec.

D	P	14	G	M	24	060	4	1	A	A
1	2	3,4	5	6	7,8	9,10,11	12	13	14	15

Brand

D - Daikin

Product Type

P - Packaged

SEER

14 - 14 SEER

16 - Up to 16 SEER

Unit Type

G - Gas/Electric

D - Dual Fuel

Configuration

M - Multi-position

Tonnage Nominal

24 - 2 tons

30 - 2½ tons

36 - 3 tons

42 - 3½ tons

48 - 4 tons

61 - 5 tons

Nominal Heat Input

040 40 MBTU/H

060 60 MBTU/H

080 80 MBTU/H

100 100 MBTU/H

120 120 MBTU/H

Refrigerant

4 - R-410A

Voltage

1 - 208/230V single-phase, 60 Hz

Engineering

Major revision

Engineering

Minor revision

Accessories

Accessory Description	Item Number	
	Medium Chassis	Large Chassis
Concentric Kit	CDK36	CDK4872
Downflow Economizer	DDNECNJPGMM	DDNECNJPGML
Downflow Internal Filter Rack (with Economizer)	DDNIFRPGMM	N/A (built into economizer)
Downflow Internal Filter Rack (no Economizer)	DDNIFRPGA	DDNIFRPGA
Downflow Manual Damper	DDN25FDPGCHMM	DDN25FDPGCHML
Downflow Motorized Damper	DDN25MFDPGCHMM	DDN25MFDPGCHML
Downflow Square to Round	SQRPG101/102	SQRPG103
Economizer Wiring Harness (2-4 Ton)	0259G00214	0259G00214
Economizer Wiring Harness (5 Ton)	N/A	0259L00412
External Horizontal Filter Rack	DPHFRA	DPHFRA
High-Altitude Kit	HA-03	HA-03
Horizontal Duct Cover	20464501NGK	20464502NGK
Horizontal Economizer	DHZECNJPGCHM	DHZECNJPGCHL
Horizontal Manual Damper	DHZ25FDPGCHMM	DHZ25FDPGCHML
Horizontal Motorized Damper	DHZ25MFDPGCHMM	DHZ25MFDPGCHML
Horizontal Square to Round	SQRPGH101/102	SQRPGH103
Internal Horizontal Filter Rack	DHZIFRPGCHA	DHZIFRPGCHA
LP Conversion Kit (Single-Stage Models)	LPM-07	LPM-07
LP Conversion Kit (Two-Stage Models)	N/A	LPM-08
Outdoor Thermostat with Housing	OTDFPKG-01	OTDFPKG-01
Roof Curb	D14CRBPGCHMA	D14CRBPGCHMA

	DP14GM24 04041A*	DP14GM24 06041A*	DP14GM30 04041A*	DP14GM30 06041A*	DP14GM36 04041A*	DP14GM36 06041A*
Cooling Capacity						
Total BTU/h	23,000	23,000	28,500	28,500	34,200	34,200
Sensible BTU/h	18,400	18,400	28,600	28,600	27,000	27,000
SEER / EER	14.0 / 11.0	14.0 / 11.0	14.0 / 11.0	14.0 / 11.0	14.0 / 11.0	14.0 / 11.0
Decibels	78	78	78	78	78	78
AHRI Reference #s	7505456	7505456	7505457	7505457	7505458	7505458
Heating Capacity						
Input BTU/h	40,000	60,000	40,000	60,000	40,000	60,000
Output BTU/h	31,000	48,000	31,000	48,000	31,000	48,000
AFUE	81	81	81	81	81	81
Temperature Rise Range	25 - 55	30 - 60	25 - 55	30 - 60	25 - 55	30 - 60
No. of Burners	2	3	2	3	2	3
Orifice Size (Natural/Propane)	45 / 1.25MM	45 / 1.25MM	45 / 1.25MM	45 / 1.25MM	45 / 1.25MM	45 / 1.25MM
Evaporator Motor						
Type	EEM.	EEM.	EEM.	EEM.	EEM.	EEM.
Wheel (D x W)	10” x 8”	10” x 8”	10” x 8”	10” x 8”	10” x 9”	10” x 9”
Indoor Nominal CFM	800	800	1,000	1,000	1,200	1,200
Motor Speed Tap (Cooling)	T4	T4	T4	T4	T4	T4
Horsepower	1/2	1/2	1/2	1/2	1/2	1/2
Evaporator Coil						
Face Area (ft^2)	4.3	4.3	4.3	4.3	4.3	4.3
Rows Deep/Fins per Inch	3/14	3/14	3/14	3/14	4/14	4/14
Piston Size (Cooling)	0.057"	0.057"	0.062"	0.062"	0.068"	0.068"
Drain Size (NPT)	¾”	¾”	¾”	¾”	¾”	¾”
Refrigerant Charge (oz.)	75	75	78	78	62	62
Condenser Fan / Coil						
Horsepower - RPM	1/6 - 815	1/6 - 815	1/4 - 1,075	1/4 - 1,075	1/4 - 830	1/4 - 830
Diameter / # of Blades	22” / 3	22” / 3	22” / 3	22” / 3	22” / 3	22” / 3
Outdoor Nominal CFM	2,150	2,150	3,050	3,050	2,250	2,250
Face Area (ft^2)	12.3	12.3	12.3	12.3	8.8	8.8
Rows Deep/Fins per Inch	1/24	1/24	1/24	1/24	2/27	2/27
Compressor						
Quantity / Type	1 / Scroll	1 / Scroll	1 / Scroll	1 / Scroll	1 / Scroll	1 / Scroll
Stage	Single	Single	Single	Single	Single	Single
Compressor RLA/LRA	13.5 / 58.3	13.5 / 58.3	14.1 / 73	14.1 / 73	14.1/77.0	14.1/77.0
Electrical Data						
Voltage-Phase (60 Hz)	208/230-1	208/230-1	208/230-1	208/230-1	208/230-1	208/230-1
Indoor Blower FLA	3.8	3.8	3.8	3.8	3.8	3.8
Outdoor Fan FLA/LRA	0.95/2.0	0.95/2.0	1.4 / 3.2	1.4 / 3.2	1.3 / 3.0	1.3 / 3.0
Min. Circuit Ampacity	21.6	21.6	22.8	22.8	22.7	22.7
Max. Overcurrent Protection	35 amps	35 amps	35 amps	35 amps	35 amps	35 amps
Entrance Size Power Supply	1⅛”	1⅛”	1⅛”	1⅛”	1⅛”	1⅛”
Entrance Size Control Voltage	⅞”	⅞”	⅞”	⅞”	⅞”	⅞”
Operating / Ship Weights (lbs)	412 / 435	417 / 439	415 / 438	420 / 442	449 / 470	453 / 475

[1] Wire size should be determined in accordance with National Electrical Codes. Extensive wire runs will require larger wire sizes.

[2] Must use time-delay fuses or HACR-type circuit breakers of the same size as noted.

Note: Always check the S&R plate for electrical data on the unit being installed.

	DP14GM36 08041A*	DP14GM36 04041C*	DP14GM36 06041C*	DP14GM36 08041C*	DP14GM42 06041A*	DP14GM42 08041A*	DP14GM42 06041C*	DP14GM42 08041C*
COOLING CAPACITY								
Total BTU/h	34,200	34,200	34,200	34,200	40,000	40,000	40,000	40,000
Sensible BTU/h	27,000	27,000	27,000	27,000	30,000	30,000	30,000	30,000
SEER / EER	14.0 / 11.0	14.0 / 11.0	14.0 / 11.0	14.0 / 11.0	14.0 / 11.0	14.0 / 11.0	14.0 / 11.0	14.0 / 11.0
Decibels	78	78	78	78	78	78	78	78
AHRI Reference #s	7505458	207252524	207252524	207252524	7505459	7505459	207252528	207252528
HEATING CAPACITY								
Input BTU/h	80,000	40,000	60,000	80,000	60,000	80,000	60,000	80,000
Output BTU/h	64,000	31,000	48,000	64,000	48,000	64,000	48,000	64,000
AFUE	81	81	81	81	81	81	81	81
Temperature Rise Range	30 - 60	25 - 55	30 - 60	30 - 60	30 - 60	30 - 60	30 - 60	30 - 60
No. of Burners	4	2	3	4	3	4	3	4
Orifice Size (Natural/Propane)	45 / 1.25MM	45 / 1.25MM	45 / 1.25MM	45 / 1.25MM	45 / 1.25MM	45 / 1.25MM	45 / 1.25MM	45 / 1.25MM
EVAPORATOR MOTOR								
Type	EEM	EEM	EEM	EEM	EEM	EEM	EEM	EEM
Wheel (D x W)	10” x 9”	10” x 9”	10” x 9”	10” x 9”	10” x 9”	10” x 9”	11” x 10”	11” x 10”
Indoor Nominal CFM	1,200	1,200	1,200	1,200	1,300	1,300	1,300	1,300
Motor Speed Tap (Cooling)	T4	T4	T4	T4	T4	T4	T4	T4
Horsepower	1/2	1/2	1/2	1/2	3/4	3/4	3/4	3/4
EVAPORATOR COIL								
Face Area (ft^2)	4.3	4.3	4.3	4.3	4.3	4.3	5.7	5.7
Rows Deep/Fins per Inch	4/14	4/14	4/14	4/14	4/14	4/14	4/14	4/14
Piston Size (Cooling)	0.068	0.068	0.068	0.068	0.072	0.072	0.072	0.072
Drain Size (NPT)	¾”	¾”	¾”	¾”	¾”	¾”	¾”	¾”
Refrigerant Charge (oz.)	62	92	92	92	88	88	103	103
CONDENSER FAN / COIL								
Horsepower - RPM	1/4 - 830	1/4 - 1,075	1/4 - 1,075	1/4 - 1,075	1/4 - 1,075	1/4 - 1,075	1/4 - 1,075	1/4 - 1,075
Diameter / # of Blades	22” / 3	22" / 3	22" / 3	22" / 3	22” / 3	22” / 3	22” / 3	22” / 3
Outdoor Nominal CFM	2,250	2,850	2,850	2,850	2,850	2,850	3,300	3,300
Face Area (ft^2)	8.8	11.1	11.1	11.1	11.1	11.1	15.4	15.4
Rows Deep/Fins per Inch	2/27	2/27	2/27	2/27	2/27	2/27	1/24	1/24
COMPRESSOR								
Quantity / Type	1 / Scroll	1 / Scroll	1 / Scroll	1 / Scroll	1 / Scroll	1 / Scroll	1 / Scroll	1 / Scroll
Stage	Single	Single	Single	Single	Single	Single	Single	Single
Compressor RLA/LRA	14.1/77.0	14.1 / 77.0	14.1 / 77.0	14.1 / 77.0	17.9 / 112	17.9 / 112	17.9 / 112.0	17.9 / 112.0
ELECTRICAL DATA								
Voltage-Phase (60 Hz)	208/230-1	208/230-1	208/230-1	208/230-1	208/230-1	208/230-1	208/230-1	208/230-1
Indoor Blower FLA	3.8	3.8	3.8	3.8	5.4	5.4	5.4	5.4
Outdoor Fan FLA/LRA	1.3 / 3.0	1.4 / 3.2	1.4 / 3.2	1.4 / 3.2	1.4/ 3.2	1.4/ 3.2	1.4 / 3.2	1.4 / 3.2
Min. Circuit Ampacity	22.7	22.8	22.8	22.8	29.2	29.2	29.2	29.2
Max. Overcurrent Protection	35 amps	35 amps	35 amps	35 amps	45 amps	45 amps	45 amps	45 amps
Entrance Size Power Supply	1⅛”	1⅛”	1⅛”	1⅛”	1⅛”	1⅛”	1⅛”	1⅛”
Entrance Size Control Voltage	⅞”	⅞”	⅞”	⅞”	⅞”	⅞”	⅞”	⅞”
OPERATING / SHIP WEIGHTS (LBS)	458 / 480	488 / 510	493 / 515	496 / 520	493 / 515	496 / 520	518 / 540	523 / 545

[1] Wire size should be determined in accordance with National Electrical Codes. Extensive wire runs will require larger wire sizes.

[2] Must use time-delay fuses or HACR-type circuit breakers of the same size as noted.

NOTE: Always check the S&R plate for electrical data on the unit being installed.

	DP14GM48 06041A*	DP14GM48 08041A*	DP14GM48 10041A*	DP14GM48 06041C*	DP14GM48 08041C*	DP14GM48 10041C*
Cooling Capacity						
Total BTU/h	46,500	46,500	46,500	46,500	46,500	46,500
Sensible BTU/h	36,800	36,800	36,800	36,800	36,800	36,800
SEER / EER	14.0 / 11.0	14.0 / 11.0	14.0 / 11.0	14.0 / 11.0	14.0 / 11.0	14.0 / 11.0
Decibels	80	80	80	80	80	80
AHRI Reference #s	7505460	7505460	7505460	207252536	207252536	207252536
Heating Capacity						
Input BTU/h	60,000	80,000	100,000	60,000	80,000	100,000
Output BTU/h	48,000	64,000	80,000	48,000	64,000	80,000
AFUE	81	81	81	81	81	81
Temperature Rise Range	30 - 60	30 - 60	35 - 65	30 - 60	30 - 60	35 - 65
No. of Burners	3	4	5	3	4	5
Orifice Size (Natural/Propane)	45 / 1.25MM	45 / 1.25MM	45 / 1.25MM	45 / 1.25MM	45 / 1.25MM	45 / 1.25MM
Evaporator Motor						
Type	EEM	EEM	EEM	EEM	EEM	EEM
Wheel (D x W)	11” x 10”	11” x 10”	11” x 10”	11” x 10”	11” x 10”	11” x 10”
Indoor Nominal CFM	1,525	1,525	1,525	1,525	1,525	1,525
Motor Speed Tap (Cooling)	T4	T4	T4	T4	T4	T4
Horsepower	3/4	3/4	3/4	3/4	3/4	3/4
Evaporator Coil						
Face Area (ft^2)	5.7	5.7	5.7	5.7	5.7	5.7
Rows Deep/Fins per Inch	4/14	4/14	4/14	4/14	4/14	4/14
Piston Size (Cooling)	0.078	0.078	0.078	0.076	0.076	0.076
Drain Size (NPT)	¾”	¾”	¾”	¾”	¾”	¾”
Refrigerant Charge (oz.)	99	99	99	107	107	107
Condenser Fan / Coil						
Horsepower - RPM	1/4 - 1,075	1/4 - 1,075	1/4 - 1,075	1/3 - 1,122	1/3 - 1,122	1/3 - 1,122
Diameter / # of Blades	22” / 3	22” / 3	22” / 3	22” / 3	22” / 3	22” / 3
Outdoor Nominal CFM	3,300	3,300	3,300	3,000	3,000	3,000
Face Area (ft^2)	15.4	15.4	15.4	14.4	14.4	14.4
Rows Deep/Fins per Inch	1/24	1/24	1/24	2/27	2/27	2/27
Compressor						
Quantity / Type	1 / Scroll	1 / Scroll	1 / Scroll	1 / Scroll	1 / Scroll	1 / Scroll
Stage	Single	Single	Single	Single	Single	Single
Compressor RLA/LRA	19.9/109	19.9/109	19.9/109	18.5 / 124.0	18.5 / 124.0	18.5 / 124.0
Electrical Data						
Voltage-Phase (60 Hz)	208/230-1	208/230-1	208/230-1	208/230-1	208/230-1	208/230-1
Indoor Blower FLA	5.4	5.4	5.4	5.4	5.4	5.4
Outdoor Fan FLA/LRA	1.4 / 3.2	1.4 / 3.2	1.4 / 3.2	2.0 / 4.4	2.0 / 4.4	2.0 / 4.4
Min. Circuit Ampacity	31.7	31.7	31.7	30.5	30.5	30.5
Max. Overcurrent Protection	50 amps	50 amps	50 amps	45 amps	45 amps	45 amps
Entrance Size Power Supply	1⅛”	1⅛”	1⅛”	1⅛”	1⅛”	1⅛”
Entrance Size Control Voltage	⅞”	⅞”	⅞”	⅞”	⅞”	⅞”
Operating / Ship Weights (lbs)	518 / 540	523 / 545	528 / 550	548 / 550	533 / 555	538 / 560

[1] Wire size should be determined in accordance with National Electrical Codes. Extensive wire runs will require larger wire sizes.

[2] Must use time-delay fuses or HACR-type circuit breakers of the same size as noted.

Notes

- Always check the S&R plate for electrical data on the unit being installed.
- Test data was use to calculate the MOP and MCA.

	DP14GM61 08041A*	DP14GM61 10041A*	DP14GM61 12041A*
Cooling Capacity			
Total BTU/h	57,000	57,000	57,000
Sensible BTU/h	42,000	42,000	42,000
SEER / EER	14.0 / 11	14.0 / 11	14.0 / 11
Decibels	78	78	78
AHRI Reference #s	8321929	8321929	8321929
Heating Capacity			
High-Fire Input / Output	80,000 / 63,000	100,000 / 78,000	120,000 / 94,000
Low-Fire Input / Output	60,000 / 47,000	75,000 / 58,000	90,000 / 71,000
AFUE	81	81	81
Temperature Rise Range	30 - 60	35 - 65	35 - 65
No. of Burners	4	5	6
Orifice Size (Natural/Propane)	45 / 1.25MM	45 / 1.25MM	45 / 1.25MM
Evaporator Motor			
Type	EEM	EEM	EEM
Wheel (D x W)	11” x 10”	11” x 10”	11” x 10”
Indoor Nominal CFM	1,750	1,750	1,750
Motor Speed Tap (Cooling)	T3 L / T4 H	T3 L / T4 H	T3 L / T4 H
Horsepower	1	1	1
Evaporator Coil			
Face Area (ft^2)	5.7	5.7	5.7
Rows Deep/Fins per Inch	4/14	4/14	4/14
Piston Size (Cooling)	TXV	TXV	TXV
Drain Size (NPT)	¾”	¾”	¾”
Refrigerant Charge (oz.)	100	100	100
Condenser Fan / Coil			
Horsepower - RPM	1/3 - 1,122	1/3 - 1,122	1/3 - 1,122
Diameter / # of Blades	22” / 3	22” / 3	22” / 3
Outdoor Nominal CFM	3,000	3,000	3,000
Face Area (ft^2)	14.4	14.4	14.4
Rows Deep/Fins per Inch	2/27	2/27	2/27
Compressor			
Quantity / Type	1 / Scroll	1 / Scroll	1 / Scroll
Stage	Two	Two	Two
Compressor RLA/LRA	28.8 / 152.9	28.8 / 152.9	28.8 / 152.9
Electrical Data			
Voltage-Phase (60 Hz)	208/230-1	208/230-1	208/230-1
Indoor Blower FLA	7.0	7.0	7.0
Outdoor Fan FLA/LRA	2.0 / 4.40	2.0 / 4.40	2.0 / 4.40
Min. Circuit Ampacity	35.0	35.0	35.0
Max. Overcurrent Protection	50 amps	50 amps	50 amps
Entrance Size Power Supply	1⅛”	1⅛”	1⅛”
Entrance Size Control Voltage	⅞”	⅞”	⅞”
Operating / Ship Weights (lbs)	533 / 555	538 / 560	543 / 565

[1] Wire size should be determined in accordance with National Electrical Codes. Extensive wire runs will require larger wire sizes.

[2] Must use time-delay fuses or HACR-type circuit breakers of the same size as noted.

Notes

- Always check the S&R plate for electrical data on the unit being installed.
- Test data was use to calculate the MOP and MCA.

	DP14GM61 08041C*	DP14GM61 10041C*	DP14GM61 12041C*
Cooling Capacity			
Total BTU/h	56,000	56,000	56,000
Sensible BTU/h	42,000	42,000	42,000
SEER / EER	14.0 / 11.0	14.0 / 11.0	14.0 / 11.0
Decibels	78	78	78
AHRI Reference #s	207252542	207252542	207252542
Heating Capacity			
High-Fire Input / Output	80,000 / 63,000	100,000 / 78,000	120,000 / 94,000
Low-Fire Input / Output	60,000 / 47,000	75,000 / 58,000	90,000 / 71,000
AFUE	81	81	81
Temperature Rise Range	30 - 60	35 - 65	35 - 65
No. of Burners	4	5	6
Orifice Size (Natural/Propane)	45 / 1.25MM	45 / 1.25MM	45 / 1.25MM
Evaporator Motor			
Type	EEM	EEM	EEM
Wheel (D x W)	11” x 10”	11” x 10”	11” x 10”
Indoor Nominal CFM	1325 L / 1700 H	1325 L / 1700 H	1325 L / 1700 H
Motor Speed Tap (Cooling)	T3 L / T4 H	T3 L / T4 H	T3 L / T4 H
Horsepower	1/1	1/1	1/1
Evaporator Coil			
Face Area (ft^2)	5.7	5.7	5.7
Rows Deep/Fins per Inch	4/14	4/14	4/14
Piston Size (Cooling)	TXV	TXV	TXV
Drain Size (NPT)	¾”	¾”	¾”
Refrigerant Charge (oz.)	100	100	100
Condenser Fan / Coil			
Horsepower - RPM	1/3 - 1,122	1/3 - 1,122	1/3 - 1,122
Diameter / # of Blades	22” / 3	22” / 3	22” / 3
Outdoor Nominal CFM	3,000	3,000	3,000
Face Area (ft^2)	14.4	14.4	14.4
Rows Deep/Fins per Inch	2/27	2/27	2/27
Compressor			
Quantity / Type	1 / Scroll	1 / Scroll	1 / Scroll
Stage	Two	Two	Two
Compressor RLA/LRA	22.9 / 147.2	22.9 / 147.2	22.9 / 147.2
Electrical Data			
Voltage-Phase (60 Hz)	208/230-1	208/230-1	208/230-1
Indoor Blower FLA	7.0	7.0	7.0
Outdoor Fan FLA/LRA	2.0 / 4.40	2.0 / 4.40	2.0 / 4.40
Min. Circuit Ampacity	37.6	37.6	37.6
Max. Overcurrent Protection	60 amps	60 amps	60 amps
Entrance Size Power Supply	1⅛”	1⅛”	1⅛”
Entrance Size Control Voltage	⅞”	⅞”	⅞”
Operating / Ship Weights (lbs)	533 / 555	538 / 560	543 / 565

[1] Wire size should be determined in accordance with National Electrical Codes. Extensive wire runs will require larger wire sizes.

[2] Must use time-delay fuses or HACR-type circuit breakers of the same size as noted.

Notes

- Always check the S&R plate for electrical data on the unit being installed.
- Test data was use to calculate the MOP and MCA.

			Outdoor Ambient Temperature																							
			65				75				85				95				105				115			
			Entering Indoor Wet Bulb Temperature																							
IDB	Airflow		59	63	67	71	59	63	67	71	59	63	67	71	59	63	67	71	59	63	67	71	59	63	67	71
70	889	MBh	22.7	23.5	25.8	-	22.2	23.0	25.2	-	21.7	22.4	24.6	-	21.1	21.9	24.0	-	20.1	20.8	22.8	-	18.6	19.3	21.1	-
		S/T	0.81	0.68	0.47	-	0.84	0.70	0.48	-	0.86	0.72	0.50	-	0.89	0.74	0.51	-	0.92	0.77	0.53	-	0.93	0.77	0.54	-
		ΔT	19	16	12	-	19	17	13	-	19	17	13	-	19	17	13	-	19	17	13	-	18	15	12	-
		kW	1.44	1.47	1.51	-	1.55	1.58	1.64	-	1.65	1.69	1.74	-	1.74	1.78	1.84	-	1.81	1.86	1.92	-	1.88	1.92	1.99	-
		Amps	6.6	6.8	6.9	-	7.1	7.2	7.4	-	7.6	7.7	8.0	-	8.0	8.2	8.4	-	8.5	8.7	8.9	-	8.9	9.1	9.4	-
		HI PR	236	254	269	-	265	286	302	-	302	325	343	-	344	370	391	-	387	416	439	-	427	460	485	-
		LO PR	113	120	131	-	119	127	138	-	124	132	144	-	130	138	151	-	136	145	158	-	141	150	164	-
	792	MBh	22.0	22.8	25.0	-	21.5	22.3	24.5	-	21.0	21.8	23.9	-	20.5	21.3	23.3	-	19.5	20.2	22.1	-	18.0	18.7	20.5	-
		S/T	0.77	0.64	0.45	-	0.80	0.67	0.46	-	0.82	0.68	0.47	-	0.85	0.71	0.49	-	0.88	0.73	0.51	-	0.88	0.74	0.51	-
		ΔT	20	17	13	-	20	17	13	-	20	17	13	-	20	17	13	-	20	17	13	-	19	16	12	-
		kW	1.42	1.46	1.50	-	1.54	1.57	1.62	-	1.64	1.67	1.73	-	1.72	1.76	1.82	-	1.80	1.84	1.90	-	1.86	1.91	1.97	-
		Amps	6.6	6.7	6.9	-	7.0	7.2	7.4	-	7.5	7.7	7.9	-	8.0	8.1	8.4	-	8.4	8.6	8.8	-	8.8	9.0	9.3	-
		HI PR	234	252	266	-	263	283	299	-	299	322	340	-	340	366	387	-	383	412	435	-	423	455	481	-
		LO PR	111	119	129	-	118	125	137	-	122	130	142	-	129	137	149	-	135	143	157	-	139	148	162	-
	694	MBh	20.3	21.1	23.1	-	19.9	20.6	22.6	-	19.4	20.1	22.0	-	18.9	19.6	21.5	-	18.0	18.6	20.4	-	16.7	17.3	18.9	-
		S/T	0.74	0.62	0.43	-	0.77	0.64	0.45	-	0.79	0.66	0.46	-	0.82	0.68	0.47	-	0.85	0.71	0.49	-	0.85	0.71	0.49	-
		ΔT	20	17	13	-	20	18	13	-	20	18	13	-	20	18	13	-	20	17	13	-	19	16	12	-
		kW	1.39	1.42	1.47	-	1.50	1.53	1.58	-	1.60	1.63	1.69	-	1.68	1.72	1.78	-	1.75	1.79	1.85	-	1.82	1.86	1.92	-
		Amps	6.4	6.6	6.7	-	6.9	7.0	7.2	-	7.4	7.5	7.7	-	7.8	7.9	8.2	-	8.2	8.4	8.6	-	8.6	8.8	9.1	-
		HI PR	227	244	258	-	255	274	290	-	290	312	329	-	330	355	375	-	371	400	422	-	410	442	466	-
		LO PR	108	115	126	-	114	122	133	-	119	126	138	-	125	133	145	-	131	139	152	-	135	144	157	-
75	889	MBh	23.1	23.8	25.7	27.6	22.6	23.2	25.1	27.0	22.0	22.7	24.5	26.3	21.5	22.1	23.9	25.7	20.4	21.0	22.7	24.4	18.9	19.5	21.1	22.6
		S/T	0.92	0.82	0.62	0.40	0.95	0.85	0.64	0.41	0.98	0.87	0.66	0.43	1.00	0.90	0.68	0.44	1.00	0.94	0.71	0.46	1.00	0.94	0.71	0.46
		ΔT	22	20	17	11	22	20	17	12	22	20	17	12	22	21	17	12	21	20	17	12	20	19	16	11
		kW	1.45	1.48	1.53	1.58	1.56	1.60	1.65	1.71	1.66	1.70	1.76	1.82	1.75	1.79	1.85	1.92	1.83	1.87	1.94	2.00	1.90	1.94	2.01	2.08
		Amps	6.7	6.8	7.0	7.2	7.1	7.3	7.5	7.7	7.7	7.8	8.0	8.3	8.1	8.3	8.5	8.8	8.5	8.7	9.0	9.3	9.0	9.2	9.5	9.8
		HI PR	239	257	271	283	268	288	305	318	305	328	346	361	347	374	395	412	391	420	444	463	432	464	490	512
		LO PR	114	121	132	141	120	128	140	149	125	133	145	154	131	140	152	162	138	146	160	170	142	151	165	176
	792	MBh	22.4	23.1	25.0	26.8	21.9	22.5	24.4	26.2	21.4	22.0	23.8	25.6	20.9	**21.5**	23.2	24.9	19.8	20.4	22.1	23.7	18.4	18.9	20.5	22.0
		S/T	0.88	0.78	0.59	0.38	0.91	0.81	0.61	0.40	0.93	0.83	0.63	0.41	0.96	**0.86**	0.65	0.42	1.00	0.89	0.68	0.43	1.00	0.90	0.68	0.44
		ΔT	23	21	17	12	23	21	17	12	23	21	17	12	23	**21**	18	12	23	21	17	12	21	20	16	11
		kW	1.44	1.47	1.52	1.57	1.55	1.58	1.64	1.69	1.65	1.69	1.74	1.80	1.74	**1.78**	1.84	1.90	1.82	1.86	1.92	1.99	1.88	1.92	1.99	2.06
		Amps	6.6	6.8	6.9	7.2	7.1	7.2	7.4	7.7	7.6	7.7	8.0	8.2	8.0	**8.2**	8.4	8.7	8.5	8.7	8.9	9.2	8.9	9.1	9.4	9.7
		HI PR	237	255	269	280	265	286	302	315	302	325	343	358	344	**370**	391	407	387	416	439	458	427	460	486	506
		LO PR	113	120	131	139	119	127	138	147	124	132	144	153	130	**138**	151	161	136	145	158	168	141	150	164	174
	694	MBh	20.7	21.3	23.1	24.8	20.2	20.8	22.5	24.2	19.7	20.3	22.0	23.6	19.2	19.8	21.5	23.0	18.3	18.8	20.4	21.9	16.9	17.4	18.9	20.3
		S/T	0.84	0.76	0.57	0.37	0.88	0.78	0.59	0.38	0.90	0.80	0.61	0.39	0.93	0.83	0.63	0.40	0.96	0.86	0.65	0.42	0.97	0.87	0.66	0.42
		ΔT	23	21	17	12	23	22	18	12	23	22	18	12	24	22	18	12	23	21	18	12	22	20	16	11
		kW	1.40	1.43	1.48	1.53	1.51	1.54	1.60	1.65	1.61	1.65	1.70	1.76	1.70	1.73	1.79	1.85	1.77	1.81	1.87	1.93	1.83	1.87	1.94	2.00
		Amps	6.5	6.6	6.8	7.0	6.9	7.1	7.3	7.5	7.4	7.6	7.8	8.0	7.8	8.0	8.2	8.5	8.3	8.5	8.7	9.0	8.7	8.9	9.1	9.5
		HI PR	229	247	261	272	257	277	293	305	293	315	333	347	333	359	379	395	375	404	426	445	414	446	471	491
		LO PR	109	116	127	135	115	123	134	143	120	128	139	148	126	134	146	156	132	140	153	163	137	145	159	169

IDB: Entering Indoor Dry Bulb Temperature

Shaded area reflects ACCA (TVA) conditions.

kW = Total system power

High and low pressures are measured at the liquid and suction access fittings.

Amps: Unit amps (comp.+ evaporator + condenser fan motors)

			Outdoor Ambient Temperature																							
			65				75				85				95				105				115			
			Entering Indoor Wet Bulb Temperature																							
IDB	Airflow		59	63	67	71	59	63	67	71	59	63	67	71	59	63	67	71	59	63	67	71	59	63	67	71
80	889	MBh	23.5	24.0	25.7	27.4	23.0	23.5	25.1	26.8	22.4	22.9	24.5	26.2	21.9	22.3	23.9	25.5	20.8	21.2	22.7	24.2	19.2	19.7	21.0	22.5
		S/T	1.00	0.95	0.77	0.57	1.00	1.00	0.80	0.60	1.00	1.00	0.82	0.61	1.00	1.00	0.84	0.63	1.00	1.00	0.88	0.65	1.00	1.00	0.88	0.66
		ΔT	24	23	20	16	24	24	21	17	23	24	21	17	23	23	21	17	21	22	21	16	20	20	19	15
		kW	1.46	1.49	1.54	1.59	1.58	1.61	1.66	1.72	1.68	1.72	1.77	1.83	1.77	1.81	1.87	1.94	1.85	1.89	1.95	2.02	1.91	1.96	2.02	2.09
		Amps	6.7	6.9	7.1	7.3	7.2	7.3	7.5	7.8	7.7	7.9	8.1	8.4	8.2	8.3	8.6	8.9	8.6	8.8	9.1	9.4	9.1	9.3	9.5	9.9
		HI PR	241	260	274	286	271	291	308	321	308	331	350	365	351	377	399	416	395	425	448	468	436	469	495	517
		LO PR	115	122	133	142	121	129	141	150	126	134	147	156	133	141	154	164	139	148	161	172	144	153	167	178
	792	MBh	22.8	23.3	24.9	26.6	22.3	22.8	24.3	26.0	21.8	22.2	23.8	25.4	21.2	21.7	**23.2**	24.8	20.2	20.6	22.0	23.5	18.7	19.1	20.4	21.8
		S/T	0.96	0.90	0.73	0.55	1.00	0.93	0.76	0.57	1.00	0.96	0.78	0.58	1.00	0.99	**0.80**	0.60	1.00	1.00	0.84	0.62	1.00	1.00	0.84	0.63
		ΔT	25	24	21	17	26	25	21	17	25	25	22	17	25	25	**22**	17	23	24	21	17	22	22	20	16
		kW	1.45	1.48	1.53	1.58	1.56	1.60	1.65	1.71	1.66	1.70	1.76	1.82	1.75	1.79	**1.86**	1.92	1.83	1.87	1.94	2.00	1.90	1.94	2.01	2.08
		Amps	6.7	6.8	7.0	7.2	7.1	7.3	7.5	7.7	7.7	7.8	8.0	8.3	8.1	8.3	**8.5**	8.8	8.5	8.7	9.0	9.3	9.0	9.2	9.5	9.8
		HI PR	239	257	271	283	268	288	305	318	305	328	346	361	347	374	**395**	412	391	420	444	463	432	464	490	512
		LO PR	114	121	132	141	120	128	140	149	125	133	145	155	131	140	**152**	162	138	146	160	170	142	151	165	176
	694	MBh	21.1	21.5	23.0	24.6	20.6	21.0	22.5	24.0	20.1	20.5	21.9	23.4	19.6	20.0	21.4	22.9	18.6	19.0	20.3	21.7	17.2	17.6	18.8	20.1
		S/T	0.93	0.87	0.71	0.53	0.96	0.90	0.73	0.55	0.98	0.92	0.75	0.56	1.02	0.95	0.78	0.58	1.05	0.99	0.81	0.60	1.06	1.00	0.81	0.61
		ΔT	26	25	22	17	26	25	22	17	26	25	22	17	26	25	22	18	26	25	22	17	24	23	20	16
		kW	1.41	1.44	1.49	1.54	1.52	1.56	1.61	1.66	1.62	1.66	1.71	1.77	1.71	1.75	1.81	1.87	1.78	1.82	1.89	1.95	1.85	1.89	1.95	2.02
		Amps	6.5	6.7	6.8	7.1	7.0	7.1	7.3	7.5	7.5	7.6	7.8	8.1	7.9	8.1	8.3	8.6	8.3	8.5	8.8	9.1	8.8	9.0	9.2	9.5
		HI PR	232	249	263	275	260	280	295	308	296	318	336	351	337	362	383	399	379	408	431	449	419	451	476	496
		LO PR	110	117	128	136	117	124	135	144	121	129	141	150	127	135	148	157	133	142	155	165	138	147	160	171
85	889	MBh	23.9	24.4	25.5	27.2	23.4	23.8	24.9	26.6	22.8	23.2	24.3	26.0	22.2	22.7	23.7	25.3	21.1	21.5	22.6	24.1	19.6	20.0	20.9	22.3
		S/T	1.00	1.00	0.92	0.75	1.00	1.00	0.95	0.77	1.00	1.00	0.98	0.79	1.00	1.00	1.00	0.82	1.00	1.00	1.00	0.85	1.00	1.00	1.00	0.86
		ΔT	25	25	24	21	24	25	25	21	24	24	25	21	23	23	25	21	22	22	23	21	20	21	22	20
		kW	1.47	1.50	1.55	1.61	1.59	1.62	1.68	1.74	1.69	1.73	1.79	1.85	1.78	1.83	1.89	1.95	1.86	1.91	1.97	2.04	1.93	1.97	2.04	2.11
		Amps	6.8	6.9	7.1	7.3	7.2	7.4	7.6	7.8	7.8	7.9	8.2	8.4	8.2	8.4	8.6	8.9	8.7	8.9	9.1	9.4	9.1	9.3	9.6	9.9
		HI PR	244	262	277	289	273	294	311	324	311	335	353	369	354	381	403	420	399	429	453	472	440	474	500	522
		LO PR	116	123	135	144	123	130	142	152	127	136	148	158	134	142	155	166	140	149	163	174	145	154	169	179
	792	MBh	23.2	23.7	24.8	26.4	22.7	23.1	24.2	25.8	22.1	22.6	23.6	25.2	21.6	22.0	23.1	24.6	20.5	20.9	21.9	23.4	19.0	19.4	20.3	21.6
		S/T	1.00	0.97	0.88	0.71	1.00	1.00	0.91	0.74	1.00	1.00	0.93	0.76	1.00	1.00	0.96	0.78	1.00	1.00	1.00	0.81	1.00	1.00	1.00	0.82
		ΔT	27	27	25	22	26	27	26	22	26	26	26	22	25	26	26	22	24	24	25	22	22	23	24	21
		kW	1.46	1.49	1.54	1.59	1.58	1.61	1.66	1.72	1.68	1.72	1.77	1.83	1.77	1.81	1.87	1.94	1.85	1.89	1.95	2.02	1.91	1.96	2.02	2.09
		Amps	6.7	6.9	7.1	7.3	7.2	7.3	7.5	7.8	7.7	7.9	8.1	8.4	8.2	8.3	8.6	8.9	8.6	8.8	9.1	9.4	9.1	9.3	9.5	9.9
		HI PR	241	260	274	286	271	291	308	321	308	331	350	365	351	377	399	416	395	425	448	468	436	469	495	517
		LO PR	115	122	133	142	121	129	141	150	126	134	147	156	133	141	154	164	139	148	161	172	144	153	167	178
	694	MBh	21.4	21.8	22.9	24.4	20.9	21.3	22.3	23.8	20.4	20.8	21.8	23.3	19.9	20.3	21.3	22.7	18.9	19.3	20.2	21.6	17.5	17.9	18.7	20.0
		S/T	0.97	0.94	0.85	0.69	1.00	0.97	0.88	0.71	1.00	1.00	0.90	0.73	1.00	1.00	0.93	0.75	1.00	1.00	0.96	0.78	1.00	1.00	0.97	0.79
		ΔT	28	27	26	22	28	27	26	22	27	27	26	22	26	27	26	23	25	26	26	22	23	24	24	21
		kW	1.42	1.45	1.50	1.55	1.54	1.57	1.62	1.68	1.64	1.67	1.73	1.79	1.72	1.76	1.82	1.89	1.80	1.84	1.90	1.97	1.86	1.91	1.97	2.04
		Amps	6.6	6.7	6.9	7.1	7.0	7.2	7.4	7.6	7.5	7.7	7.9	8.2	8.0	8.1	8.4	8.6	8.4	8.6	8.8	9.1	8.8	9.0	9.3	9.6
		HI PR	234	252	266	277	263	283	298	311	299	321	339	354	340	366	387	403	383	412	435	454	423	455	481	501
		LO PR	111	119	129	138	118	125	137	146	122	130	142	151	129	137	149	159	135	143	156	167	139	148	162	172

IDB: Entering Indoor Dry Bulb Temperature

Shaded area reflects AHRI (TVA) conditions.

kW = Total system power

High and low pressures are measured at the liquid and suction access fittings.

Amps: Unit amps (comp.+ evaporator + condenser fan motors)

			Outdoor Ambient Temperature																							
			65				75				85				95				105				115			
			Entering Indoor Wet Bulb Temperature																							
IDB	Airflow		59	63	67	71	59	63	67	71	59	63	67	71	59	63	67	71	59	63	67	71	59	63	67	71
80	1164	MBh	29.7	30.8	33.7	-	29.0	30.1	32.9	-	28.3	29.4	32.2	-	27.6	28.6	31.4	-	26.3	27.2	29.8	-	24.3	25.2	27.6	-
		S/T	0.80	0.67	0.46	-	0.83	0.69	0.48	-	0.85	0.71	0.49	-	0.88	0.73	0.51	-	0.91	0.76	0.53	-	0.92	0.77	0.53	-
		ΔT	19	16	12	-	19	16	12	-	19	16	13	-	19	17	13	-	19	16	12	-	18	15	12	-
		kW	1.98	2.03	2.09	-	2.13	2.18	2.25	-	2.26	2.31	2.39	-	2.38	2.43	2.51	-	2.48	2.53	2.61	-	2.56	2.62	2.71	-
		Amps	8.2	8.4	8.6	-	8.8	9.0	9.2	-	9.5	9.7	9.9	-	10.0	10.2	10.6	-	10.6	10.8	11.2	-	11.2	11.4	11.8	-
		HI PR	245	263	278	-	275	295	312	-	312	336	355	-	356	383	404	-	400	431	455	-	442	476	502	-
		LO PR	111	118	129	-	117	124	136	-	122	129	141	-	128	136	148	-	134	142	155	-	138	147	161	-
	1037	MBh	28.8	29.9	32.8	-	28.2	29.2	32.0	-	27.5	28.5	31.2	-	26.8	27.8	30.5	-	25.5	26.4	28.9	-	23.6	24.5	26.8	-
		S/T	0.76	0.64	0.44	-	0.79	0.66	0.46	-	0.81	0.68	0.47	-	0.84	0.70	0.48	-	0.87	0.73	0.50	-	0.88	0.73	0.51	-
		ΔT	20	17	13	-	20	17	13	-	20	17	13	-	20	17	13	-	20	17	13	-	18	16	12	-
		kW	1.97	2.01	2.07	-	2.12	2.16	2.23	-	2.25	2.29	2.37	-	2.36	2.41	2.49	-	2.46	2.51	2.59	-	2.54	2.60	2.68	-
		Amps	8.2	8.3	8.6	-	8.7	8.9	9.2	-	9.4	9.6	9.9	-	9.9	10.2	10.5	-	10.5	10.7	11.1	-	11.1	11.3	11.7	-
		HI PR	242	261	275	-	272	293	309	-	309	333	351	-	352	379	400	-	396	426	450	-	438	471	497	-
		LO PR	110	117	127	-	116	123	135	-	120	128	140	-	126	135	147	-	133	141	154	-	137	146	159	-
	910	MBh	26.6	27.6	30.2	-	26.0	26.9	29.5	-	25.4	26.3	28.8	-	24.8	25.7	28.1	-	23.5	24.4	26.7	-	21.8	22.6	24.7	-
		S/T	0.74	0.61	0.43	-	0.76	0.64	0.44	-	0.78	0.65	0.45	-	0.81	0.67	0.47	-	0.84	0.70	0.48	-	0.85	0.71	0.49	-
		ΔT	20	17	13	-	20	17	13	-	20	17	13	-	20	17	13	-	20	17	13	-	19	16	12	-
		kW	1.92	1.96	2.02	-	2.07	2.11	2.17	-	2.19	2.24	2.31	-	2.30	2.35	2.43	-	2.40	2.45	2.53	-	2.48	2.53	2.62	-
		Amps	8.0	8.1	8.4	-	8.5	8.7	8.9	-	9.2	9.3	9.6	-	9.7	9.9	10.2	-	10.3	10.5	10.8	-	10.8	11.0	11.4	-
		HI PR	235	253	267	-	264	284	300	-	300	323	341	-	342	368	388	-	384	414	437	-	425	457	482	-
		LO PR	106	113	124	-	112	120	130	-	117	124	136	-	123	130	142	-	129	137	149	-	133	141	154	-
85	1164	MBh	30.2	31.1	33.7	36.1	29.5	30.4	32.9	35.3	28.8	29.7	32.1	34.5	28.1	28.9	31.3	33.6	26.7	27.5	29.8	31.9	24.7	25.5	27.6	29.6
		S/T	0.91	0.81	0.62	0.40	0.94	0.84	0.64	0.41	0.97	0.87	0.65	0.42	1.00	0.89	0.68	0.43	1.00	0.93	0.70	0.45	1.00	0.93	0.71	0.46
		ΔT	22	20	16	11	22	20	17	11	22	20	17	11	22	20	17	12	21	20	16	11	20	19	15	11
		kW	2.00	2.04	2.10	2.17	2.15	2.20	2.26	2.34	2.28	2.33	2.41	2.48	2.40	2.45	2.53	2.61	2.50	2.55	2.64	2.72	2.58	2.64	2.73	2.82
		Amps	8.3	8.5	8.7	9.0	8.9	9.0	9.3	9.6	9.5	9.7	10.0	10.4	10.1	10.3	10.6	11.0	10.7	10.9	11.3	11.6	11.3	11.5	11.9	12.3
		HI PR	247	266	281	293	277	298	315	329	315	339	358	374	359	387	408	426	404	435	459	479	447	481	507	529
		LO PR	112	119	130	138	118	126	137	146	123	131	143	152	129	137	150	160	135	144	157	167	140	149	162	173
	1037	MBh	29.3	30.2	32.7	35.1	28.6	29.5	31.9	34.3	28.0	28.8	31.2	33.4	27.3	**28.1**	30.4	32.6	25.9	26.7	28.9	31.0	24.0	24.7	26.8	28.7
		S/T	0.87	0.78	0.59	0.38	0.90	0.80	0.61	0.39	0.92	0.83	0.62	0.40	0.95	**0.85**	0.64	0.41	0.99	0.88	0.67	0.43	1.00	0.89	0.67	0.43
		ΔT	23	21	17	12	23	21	17	12	23	21	17	12	23	**21**	17	12	23	21	17	12	21	20	16	11
		kW	1.98	2.03	2.09	2.15	2.13	2.18	2.25	2.32	2.26	2.31	2.39	2.46	2.38	**2.43**	2.51	2.59	2.48	2.53	2.62	2.70	2.56	2.62	2.71	2.80
		Amps	8.2	8.4	8.6	8.9	8.8	9.0	9.2	9.5	9.5	9.7	9.9	10.3	10.0	**10.2**	10.6	10.9	10.6	10.8	11.2	11.5	11.2	11.4	11.8	12.2
		HI PR	245	263	278	290	275	296	312	325	312	336	355	370	356	**383**	404	422	400	431	455	474	442	476	502	524
		LO PR	111	118	129	137	117	124	136	145	122	129	141	150	128	**136**	148	158	134	142	155	166	138	147	161	171
	910	MBh	27.1	27.9	30.2	32.4	26.4	27.2	29.5	31.6	25.8	26.6	28.8	30.9	25.2	25.9	28.1	30.1	23.9	24.6	26.7	28.6	22.2	22.8	24.7	26.5
		S/T	0.84	0.75	0.57	0.36	0.87	0.78	0.59	0.38	0.89	0.80	0.60	0.39	0.92	0.82	0.62	0.40	0.95	0.85	0.65	0.41	0.96	0.86	0.65	0.42
		ΔT	23	21	17	12	23	21	17	12	23	21	18	12	23	22	18	12	23	21	17	12	22	20	16	11
		kW	1.94	1.98	2.04	2.10	2.08	2.13	2.19	2.26	2.21	2.26	2.33	2.40	2.32	2.37	2.45	2.53	2.42	2.47	2.55	2.63	2.50	2.56	2.64	2.73
		Amps	8.0	8.2	8.4	8.7	8.6	8.8	9.0	9.3	9.2	9.4	9.7	10.0	9.8	10.0	10.3	10.6	10.3	10.6	10.9	11.3	10.9	11.1	11.5	11.9
		HI PR	237	255	270	281	266	287	303	316	303	326	344	359	345	371	392	409	388	418	441	460	429	462	487	508
		LO PR	107	114	125	133	113	121	132	140	118	125	137	146	124	132	144	153	130	138	151	161	134	143	156	166

IDB: Entering Indoor Dry Bulb Temperature

Shaded area reflects ACCA (TVA) conditions.

kW = Total system power

High and low pressures are measured at the liquid and suction access fittings.

Amps: Unit amps (comp.+ evaporator + condenser fan motors)

			Outdoor Ambient Temperature																							
			65				75				85				95				105				115			
			Entering Indoor Wet Bulb Temperature																							
IDB	Airflow		59	63	67	71	59	63	67	71	59	63	67	71	59	63	67	71	59	63	67	71	59	63	67	71
80	1164	MBh	30.7	31.4	33.6	35.9	30.0	30.7	32.8	35.0	29.3	30.0	32.0	34.2	28.6	29.2	31.2	33.4	27.2	27.8	29.7	31.7	25.2	25.7	27.5	29.4
		S/T	1.00	0.94	0.76	0.57	1.00	0.97	0.79	0.59	1.00	1.00	0.81	0.61	1.00	1.00	0.84	0.62	1.00	1.00	0.87	0.65	1.00	1.00	0.87	0.65
		ΔT	24	23	20	16	24	24	20	16	23	24	20	16	23	23	21	16	21	22	20	16	20	20	19	15
		kW	2.02	2.06	2.12	2.19	2.17	2.21	2.28	2.36	2.30	2.35	2.43	2.50	2.42	2.47	2.55	2.64	2.52	2.58	2.66	2.75	2.61	2.66	2.75	2.84
		Amps	8.3	8.5	8.8	9.0	8.9	9.1	9.4	9.7	9.6	9.8	10.1	10.4	10.2	10.4	10.7	11.1	10.8	11.0	11.4	11.7	11.4	11.6	12.0	12.4
		HI PR	250	269	284	296	280	301	318	332	319	343	362	378	363	391	412	430	408	439	464	484	451	485	513	535
		LO PR	113	120	131	140	119	127	139	148	124	132	144	153	130	139	151	161	137	145	159	169	141	150	164	175
	1037	MBh	29.9	30.5	32.6	34.8	29.2	29.8	31.8	34.0	28.5	29.1	31.1	33.2	27.8	28.4	**30.3**	32.4	26.4	27.0	28.8	30.8	24.4	25.0	26.7	28.5
		S/T	0.95	0.89	0.73	0.54	0.99	0.93	0.75	0.56	1.00	0.95	0.77	0.58	1.00	0.98	**0.80**	0.60	1.00	1.00	0.83	0.62	1.00	1.00	0.83	0.62
		ΔT	25	24	21	17	26	24	21	17	25	24	21	17	25	25	**21**	17	23	24	21	17	22	22	20	16
		kW	2.00	2.04	2.10	2.17	2.15	2.20	2.26	2.34	2.28	2.33	2.41	2.48	2.40	2.45	**2.53**	2.61	2.50	2.55	2.64	2.72	2.59	2.64	2.73	2.82
		Amps	8.3	8.5	8.7	9.0	8.9	9.0	9.3	9.6	9.5	9.7	10.0	10.4	10.1	10.3	**10.6**	11.0	10.7	10.9	11.3	11.6	11.3	11.5	11.9	12.3
		HI PR	247	266	281	293	277	299	315	329	315	339	358	374	359	387	**408**	426	404	435	459	479	447	481	508	529
		LO PR	112	119	130	138	118	126	137	146	123	131	143	152	129	137	**150**	160	135	144	157	167	140	149	162	173
	910	MBh	27.6	28.2	30.1	32.2	26.9	27.5	29.4	31.4	26.3	26.8	28.7	30.7	25.6	26.2	28.0	29.9	24.3	24.9	26.6	28.4	22.6	23.0	24.6	26.3
		S/T	0.92	0.86	0.70	0.52	0.95	0.89	0.73	0.54	0.98	0.91	0.74	0.56	1.01	0.94	0.77	0.57	1.05	0.98	0.80	0.60	1.05	0.99	0.80	0.60
		ΔT	26	24	21	17	26	25	22	17	26	25	22	17	26	25	22	17	26	25	21	17	24	23	20	16
		kW	1.95	1.99	2.05	2.12	2.10	2.14	2.21	2.28	2.23	2.28	2.35	2.42	2.34	2.39	2.47	2.55	2.44	2.49	2.57	2.66	2.52	2.58	2.66	2.75
		Amps	8.1	8.3	8.5	8.8	8.7	8.8	9.1	9.4	9.3	9.5	9.8	10.1	9.9	10.1	10.4	10.7	10.4	10.7	11.0	11.3	11.0	11.2	11.6	12.0
		HI PR	240	258	272	284	269	290	306	319	306	329	348	363	349	375	396	413	392	422	446	465	433	466	492	513
		LO PR	109	115	126	134	115	122	133	142	119	127	138	147	125	133	145	155	131	140	152	162	136	144	158	168
85	1164	MBh	31.3	31.9	33.4	35.6	30.6	31.1	32.6	34.8	29.8	30.4	31.8	34.0	29.1	29.7	31.1	33.1	27.6	28.2	29.5	31.5	25.6	26.1	27.3	29.2
		S/T	1.00	1.00	0.91	0.74	1.00	1.00	0.94	0.77	1.00	1.00	0.97	0.79	1.00	1.00	1.00	0.81	1.00	1.00	1.00	0.84	1.00	1.00	1.00	0.85
		ΔT	25	25	24	21	24	25	24	21	24	24	24	21	23	23	25	21	22	22	23	21	20	21	22	20
		kW	2.03	2.07	2.14	2.21	2.18	2.23	2.30	2.38	2.32	2.37	2.45	2.53	2.44	2.49	2.57	2.66	2.54	2.60	2.68	2.77	2.63	2.69	2.77	2.87
		Amps	8.4	8.6	8.8	9.1	9.0	9.2	9.5	9.8	9.7	9.9	10.2	10.5	10.3	10.5	10.8	11.2	10.9	11.1	11.4	11.8	11.5	11.7	12.1	12.5
		HI PR	252	271	287	299	283	305	322	335	322	346	366	381	367	394	417	434	412	444	469	489	456	490	518	540
		LO PR	114	121	133	141	121	128	140	149	125	133	146	155	132	140	153	163	138	147	160	171	143	152	166	176
	1037	MBh	30.4	31.0	32.4	34.6	29.7	30.2	31.7	33.8	29.0	29.5	30.9	33.0	28.3	28.8	30.2	32.2	26.8	27.4	28.7	30.6	24.9	25.3	26.5	28.3
		S/T	1.00	0.96	0.87	0.71	1.00	1.00	0.90	0.73	1.00	1.00	0.92	0.75	1.00	1.00	0.95	0.77	1.00	1.00	0.99	0.80	1.00	1.00	1.00	0.81
		ΔT	27	26	25	22	26	27	25	22	26	26	25	22	25	26	25	22	24	24	25	22	22	22	23	20
		kW	2.02	2.06	2.12	2.19	2.17	2.21	2.28	2.36	2.30	2.35	2.43	2.50	2.42	2.47	2.55	2.64	2.52	2.58	2.66	2.75	2.61	2.66	2.75	2.84
		Amps	8.3	8.5	8.8	9.0	8.9	9.1	9.4	9.7	9.6	9.8	10.1	10.4	10.2	10.4	10.7	11.1	10.8	11.0	11.4	11.7	11.4	11.6	12.0	12.4
		HI PR	250	269	284	296	280	301	318	332	319	343	362	378	363	391	412	430	408	439	464	484	451	485	513	535
		LO PR	113	120	131	140	119	127	139	148	124	132	144	153	130	139	151	161	137	145	159	169	141	150	164	175
	910	MBh	28.0	28.6	29.9	31.9	27.4	27.9	29.2	31.2	26.7	27.2	28.5	30.4	26.1	26.6	27.8	29.7	24.8	25.3	26.4	28.2	22.9	23.4	24.5	26.1
		S/T	0.96	0.93	0.84	0.68	1.00	0.96	0.87	0.70	1.00	0.99	0.89	0.72	1.00	1.00	0.92	0.75	1.00	1.00	0.95	0.77	1.00	1.00	0.96	0.78
		ΔT	27	27	25	22	28	27	26	22	27	27	26	22	26	27	26	22	25	26	26	22	23	24	24	21
		kW	1.97	2.01	2.07	2.14	2.12	2.16	2.23	2.30	2.25	2.29	2.37	2.44	2.36	2.41	2.49	2.57	2.46	2.51	2.59	2.68	2.54	2.60	2.68	2.77
		Amps	8.2	8.3	8.6	8.8	8.7	8.9	9.2	9.5	9.4	9.6	9.9	10.2	9.9	10.2	10.5	10.8	10.5	10.7	11.1	11.4	11.1	11.3	11.7	12.1
		HI PR	242	261	275	287	272	292	309	322	309	333	351	366	352	379	400	417	396	426	450	469	438	471	497	519
		LO PR	110	117	127	136	116	123	134	143	120	128	140	149	126	134	147	156	132	141	154	164	137	146	159	169

IDB: Entering Indoor Dry Bulb Temperature

Shaded area reflects AHRI (TVA) conditions.

kW = Total system power

High and low pressures are measured at the liquid and suction access fittings.

Amps: Unit amps (comp.+ evaporator + condenser fan motors)

			Outdoor Ambient Temperature																							
			65				75				85				95				105				115			
			Entering Indoor Wet Bulb Temperature																							
IDB	Airflow		59	63	67	71	59	63	67	71	59	63	67	71	59	63	67	71	59	63	67	71	59	63	67	71
70	1329	MBh	34.8	36.1	39.5	-	34.0	35.2	38.6	-	33.2	34.4	37.7	-	32.4	33.6	36.8	-	30.8	31.9	34.9	-	28.5	29.5	32.4	-
		S/T	0.79	0.66	0.46	-	0.82	0.69	0.48	-	0.84	0.70	0.49	-	0.87	0.73	0.50	-	0.90	0.75	0.52	-	0.91	0.76	0.53	-
		ΔT	19	17	13	-	19	17	13	-	19	17	13	-	19	17	13	-	19	17	13	-	18	16	12	-
		kW	2.39	2.44	2.51	-	2.57	2.63	2.71	-	2.73	2.79	2.88	-	2.87	2.94	3.03	-	2.99	3.06	3.16	-	3.10	3.17	3.27	-
		Amps	10.0	10.2	10.5	-	10.7	10.9	11.2	-	11.5	11.7	12.1	-	12.2	12.5	12.8	-	12.9	13.2	13.6	-	13.6	13.9	14.3	-
		HI PR	249	268	283	-	280	301	318	-	318	342	361	-	362	390	412	-	407	438	463	-	450	484	512	-
		LO PR	111	119	129	-	118	125	137	-	122	130	142	-	129	137	149	-	135	143	157	-	139	148	162	-
	1184	MBh	33.8	35.0	38.4	-	33.0	34.2	37.5	-	32.2	33.4	36.6	-	31.4	32.6	35.7	-	29.9	31.0	33.9	-	27.7	28.7	31.4	-
		S/T	0.76	0.63	0.44	-	0.78	0.65	0.45	-	0.80	0.67	0.46	-	0.83	0.69	0.48	-	0.86	0.72	0.50	-	0.87	0.72	0.50	-
		ΔT	20	17	13	-	20	17	13	-	20	17	13	-	20	18	13	-	20	17	13	-	19	16	12	-
		kW	2.37	2.42	2.49	-	2.55	2.60	2.69	-	2.71	2.77	2.86	-	2.85	2.91	3.01	-	2.97	3.03	3.13	-	3.07	3.14	3.24	-
		Amps	9.9	10.1	10.4	-	10.6	10.8	11.1	-	11.4	11.6	12.0	-	12.1	12.4	12.7	-	12.8	13.1	13.5	-	13.5	13.8	14.2	-
		HI PR	247	265	280	-	277	298	315	-	315	339	358	-	359	386	407	-	403	434	458	-	446	480	507	-
		LO PR	110	117	128	-	117	124	135	-	121	129	141	-	127	135	148	-	133	142	155	-	138	147	160	-
	1038	MBh	31.2	32.3	35.4	-	30.5	31.6	34.6	-	29.7	30.8	33.8	-	29.0	30.1	33.0	-	27.6	28.6	31.3	-	25.5	26.5	29.0	-
		S/T	0.73	0.61	0.42	-	0.76	0.63	0.44	-	0.77	0.65	0.45	-	0.80	0.67	0.46	-	0.83	0.69	0.48	-	0.84	0.70	0.48	-
		ΔT	20	17	13	-	20	18	13	-	20	18	13	-	21	18	14	-	20	18	13	-	19	16	12	-
		kW	2.31	2.36	2.43	-	2.49	2.54	2.62	-	2.64	2.70	2.79	-	2.78	2.84	2.93	-	2.90	2.96	3.06	-	3.00	3.06	3.16	-
		Amps	9.7	9.9	10.1	-	10.3	10.6	10.9	-	11.1	11.4	11.7	-	11.8	12.1	12.4	-	12.5	12.7	13.1	-	13.1	13.4	13.8	-
		HI PR	239	258	272	-	269	289	305	-	305	329	347	-	348	374	395	-	391	421	445	-	432	465	491	-
		LO PR	107	114	124	-	113	120	131	-	118	125	137	-	124	131	143	-	129	138	150	-	134	142	155	-
75	1329	MBh	35.4	36.4	39.5	42.3	34.6	35.6	38.5	41.4	33.8	34.8	37.6	40.4	32.9	33.9	36.7	39.4	31.3	32.2	34.9	37.4	29.0	29.8	32.3	34.7
		S/T	0.90	0.81	0.61	0.39	0.93	0.84	0.63	0.41	0.96	0.86	0.65	0.42	0.99	0.88	0.67	0.43	1.00	0.92	0.69	0.45	1.00	0.93	0.70	0.45
		ΔT	22	20	17	11	22	21	17	12	22	21	17	12	23	21	17	12	22	20	17	12	20	19	16	11
		kW	2.41	2.46	2.53	2.62	2.59	2.65	2.73	2.82	2.75	2.81	2.90	3.00	2.90	2.96	3.06	3.16	3.02	3.09	3.19	3.30	3.12	3.19	3.30	3.41
		Amps	10.1	10.3	10.6	10.9	10.8	11.0	11.3	11.7	11.6	11.8	12.2	12.6	12.3	12.6	12.9	13.4	13.0	13.3	13.7	14.2	13.7	14.0	14.4	14.9
		HI PR	252	271	286	298	282	304	321	335	321	346	365	381	366	394	416	434	412	443	468	488	455	489	517	539
		LO PR	113	120	131	139	119	127	138	147	124	132	144	153	130	138	151	161	136	145	158	168	141	150	164	174
	1184	MBh	34.4	35.4	38.3	41.1	33.6	34.6	37.4	40.2	32.8	33.7	36.5	39.2	32.0	**32.9**	35.6	38.2	30.4	31.3	33.8	36.3	28.1	29.0	31.4	33.7
		S/T	0.86	0.77	0.58	0.37	0.89	0.80	0.60	0.39	0.91	0.82	0.62	0.40	0.94	**0.84**	0.64	0.41	0.98	0.88	0.66	0.43	0.99	0.88	0.67	0.43
		ΔT	23	21	17	12	23	21	18	12	23	21	18	12	23	**22**	18	12	23	21	17	12	22	20	16	11
		kW	2.39	2.44	2.51	2.59	2.57	2.63	2.71	2.80	2.73	2.79	2.88	2.98	2.87	**2.94**	3.03	3.13	2.99	3.06	3.16	3.27	3.10	3.17	3.27	3.38
		Amps	10.0	10.2	10.5	10.8	10.7	10.9	11.2	11.6	11.5	11.7	12.1	12.5	12.2	**12.5**	12.8	13.3	12.9	13.2	13.6	14.1	13.6	13.9	14.3	14.8
		HI PR	249	268	283	295	280	301	318	331	318	342	361	377	362	**390**	412	429	408	439	463	483	450	485	512	534
		LO PR	112	119	130	138	118	125	137	146	122	130	142	151	129	**137**	149	159	135	143	157	167	139	148	162	172
	1038	MBh	31.7	32.7	35.4	37.9	31.0	31.9	34.5	37.1	30.2	31.1	33.7	36.2	29.5	30.4	32.9	35.3	28.0	28.9	31.2	33.5	26.0	26.7	28.9	31.1
		S/T	0.83	0.74	0.56	0.36	0.86	0.77	0.58	0.37	0.88	0.79	0.60	0.38	0.91	0.81	0.62	0.40	0.94	0.84	0.64	0.41	0.95	0.85	0.64	0.41
		ΔT	23	21	18	12	24	22	18	12	24	22	18	12	24	22	18	12	23	22	18	12	22	20	17	11
		kW	2.33	2.38	2.45	2.53	2.51	2.56	2.64	2.73	2.66	2.72	2.81	2.90	2.80	2.86	2.96	3.05	2.92	2.98	3.08	3.18	3.02	3.09	3.19	3.30
		Amps	9.7	9.9	10.2	10.6	10.4	10.6	11.0	11.3	11.2	11.5	11.8	12.2	11.9	12.2	12.5	12.9	12.6	12.9	13.2	13.7	13.2	13.5	14.0	14.4
		HI PR	242	260	275	287	271	292	308	322	309	332	351	366	351	378	399	416	395	425	449	469	437	470	496	518
		LO PR	108	115	126	134	114	122	133	141	119	126	138	147	125	133	145	154	131	139	152	162	135	144	157	167

IDB: Entering Indoor Dry Bulb Temperature

Shaded area reflects ACCA (TVA) conditions.

kW = Total system power

High and low pressures are measured at the liquid and suction access fittings.

Amps: Unit amps (comp.+ evaporator + condenser fan motors)

Expanded Cooling Data — DP14GM36***41A* (cont.)

			65				75				85				95				105				115			
			Entering Indoor Wet Bulb Temperature																							
IDB	Airflow		59	63	67	71	59	63	67	71	59	63	67	71	59	63	67	71	59	63	67	71	59	63	67	71
80	1329	MBh	36.0	36.8	39.3	42.0	35.2	36.0	38.4	41.1	34.4	35.1	37.5	40.1	33.5	34.2	36.6	39.1	31.8	32.5	34.8	37.2	29.5	30.1	32.2	34.4
		S/T	1.00	0.93	0.75	0.56	1.00	0.96	0.78	0.58	1.00	1.00	0.80	0.60	1.00	1.00	0.83	0.62	1.00	1.00	0.86	0.64	1.00	1.00	0.87	0.65
		ΔT	25	24	21	16	24	24	21	17	24	24	21	17	23	24	21	17	22	23	21	17	20	21	19	15
		kW	2.43	2.48	2.56	2.64	2.61	2.67	2.75	2.84	2.78	2.84	2.93	3.03	2.92	2.99	3.08	3.19	3.04	3.11	3.21	3.32	3.15	3.22	3.33	3.44
		Amps	10.1	10.3	10.6	11.0	10.9	11.1	11.4	11.8	11.7	11.9	12.3	12.7	12.4	12.7	13.1	13.5	13.1	13.4	13.8	14.3	13.8	14.1	14.6	15.1
		HI PR	254	274	289	301	285	307	324	338	324	349	369	385	370	398	420	438	416	447	472	493	459	494	522	544
		LO PR	114	121	132	141	120	128	140	149	125	133	145	155	131	140	152	162	138	146	160	170	142	151	165	176
	1184	MBh	35.0	35.7	38.2	40.8	34.2	34.9	37.3	39.9	33.4	34.1	36.4	38.9	32.5	33.2	**35.5**	38.0	30.9	31.6	33.7	36.1	28.6	29.3	31.3	33.4
		S/T	0.94	0.88	0.72	0.54	0.98	0.92	0.75	0.56	1.00	0.94	0.76	0.57	1.00	0.97	**0.79**	0.59	1.00	1.00	0.82	0.61	1.00	1.00	0.83	0.62
		ΔT	26	25	21	17	26	25	22	17	26	25	22	17	25	25	**22**	17	24	25	21	17	22	23	20	16
		kW	2.41	2.46	2.53	2.62	2.59	2.65	2.73	2.82	2.75	2.81	2.90	3.00	2.90	2.96	**3.06**	3.16	3.02	3.09	3.19	3.30	3.12	3.19	3.30	3.41
		Amps	10.1	10.3	10.6	10.9	10.8	11.0	11.3	11.7	11.6	11.8	12.2	12.6	12.3	12.6	**12.9**	13.4	13.0	13.3	13.7	14.2	13.7	14.0	14.4	14.9
		HI PR	252	271	286	298	282	304	321	335	321	346	365	381	366	394	**416**	434	412	443	468	488	455	489	517	539
		LO PR	113	120	131	139	119	127	138	147	124	132	144	153	130	138	**151**	161	136	145	158	168	141	150	164	174
	1038	MBh	32.3	33.0	35.2	37.7	31.5	32.2	34.4	36.8	30.8	31.5	33.6	35.9	30.0	30.7	32.8	35.0	28.5	29.2	31.1	33.3	26.4	27.0	28.9	30.8
		S/T	0.91	0.85	0.69	0.52	0.94	0.88	0.72	0.54	0.97	0.91	0.74	0.55	1.00	0.94	0.76	0.57	1.03	0.97	0.79	0.59	1.04	0.98	0.80	0.60
		ΔT	26	25	22	17	26	25	22	18	26	25	22	18	27	25	22	18	26	25	22	17	24	23	20	16
		kW	2.35	2.40	2.47	2.55	2.53	2.58	2.66	2.75	2.69	2.74	2.83	2.93	2.83	2.89	2.98	3.08	2.94	3.01	3.11	3.21	3.05	3.11	3.22	3.32
		Amps	9.8	10.0	10.3	10.6	10.5	10.7	11.0	11.4	11.3	11.5	11.9	12.3	12.0	12.3	12.6	13.1	12.7	13.0	13.4	13.8	13.4	13.7	14.1	14.6
		HI PR	244	263	277	289	274	295	311	325	312	335	354	369	355	382	403	421	399	430	454	473	441	475	501	523
		LO PR	109	116	127	135	115	123	134	143	120	128	139	148	126	134	146	156	132	141	153	163	137	145	159	169
85	1329	MBh	36.7	37.4	39.1	41.8	35.8	36.5	38.2	40.8	35.0	35.6	37.3	39.8	34.1	34.8	36.4	38.8	32.4	33.0	34.6	36.9	30.0	30.6	32.0	34.2
		S/T	1.00	1.00	0.90	0.73	1.00	1.00	0.94	0.76	1.00	1.00	0.96	0.78	1.00	1.00	0.99	0.80	1.00	1.00	1.00	0.83	1.00	1.00	1.00	0.84
		ΔT	25	26	24	21	25	25	25	21	24	25	25	21	24	24	25	22	22	23	24	21	21	21	22	20
		kW	2.45	2.50	2.58	2.66	2.63	2.69	2.78	2.87	2.80	2.86	2.95	3.05	2.95	3.01	3.11	3.21	3.07	3.14	3.24	3.35	3.18	3.25	3.36	3.47
		Amps	10.2	10.4	10.7	11.1	10.9	11.2	11.5	11.9	11.8	12.0	12.4	12.8	12.5	12.8	13.2	13.6	13.2	13.5	13.9	14.4	13.9	14.3	14.7	15.2
		HI PR	257	276	292	304	288	310	327	342	328	353	372	388	373	402	424	442	420	452	477	498	464	499	527	550
		LO PR	115	122	133	142	121	129	141	150	126	134	147	156	133	141	154	164	139	148	161	172	144	153	167	178
	1184	MBh	35.6	36.3	38.0	40.5	34.8	35.4	37.1	39.6	33.9	34.6	36.2	38.7	33.1	33.7	35.3	37.7	31.5	32.1	33.6	35.8	29.1	29.7	31.1	33.2
		S/T	0.99	0.95	0.86	0.70	1.00	0.99	0.89	0.72	1.00	1.00	0.91	0.74	1.00	1.00	0.94	0.77	1.00	1.00	0.98	0.79	1.00	1.00	0.99	0.80
		ΔT	27	27	25	22	27	27	26	22	26	27	26	22	26	26	26	22	24	25	26	22	23	23	24	21
		kW	2.43	2.48	2.56	2.64	2.61	2.67	2.75	2.84	2.78	2.84	2.93	3.03	2.92	2.99	3.08	3.19	3.04	3.11	3.21	3.32	3.15	3.22	3.33	3.44
		Amps	10.1	10.3	10.6	11.0	10.9	11.1	11.4	11.8	11.7	11.9	12.3	12.7	12.4	12.7	13.1	13.5	13.1	13.4	13.8	14.3	13.8	14.1	14.6	15.1
		HI PR	254	274	289	301	285	307	324	338	324	349	369	385	370	398	420	438	416	447	472	493	459	494	522	544
		LO PR	114	121	132	141	120	128	140	149	125	133	145	155	131	140	152	162	138	146	160	170	142	151	165	176
	1038	MBh	32.8	33.5	35.1	37.4	32.1	32.7	34.3	36.5	31.3	31.9	33.4	35.7	30.6	31.1	32.6	34.8	29.0	29.6	31.0	33.1	26.9	27.4	28.7	30.6
		S/T	0.95	0.92	0.83	0.67	0.99	0.95	0.86	0.70	1.00	0.98	0.88	0.72	1.00	1.00	0.91	0.74	1.00	1.00	0.94	0.77	1.00	1.00	0.95	0.77
		ΔT	28	27	26	22	28	28	26	23	28	28	26	23	27	28	26	23	26	26	26	22	24	24	24	21
		kW	2.37	2.42	2.49	2.57	2.55	2.60	2.69	2.77	2.71	2.77	2.86	2.95	2.85	2.91	3.01	3.11	2.97	3.03	3.13	3.24	3.07	3.14	3.24	3.35
		Amps	9.9	10.1	10.4	10.7	10.6	10.8	11.1	11.5	11.4	11.6	12.0	12.4	12.1	12.4	12.7	13.2	12.8	13.1	13.5	13.9	13.5	13.8	14.2	14.7
		HI PR	247	265	280	292	277	298	314	328	315	339	358	373	358	386	407	425	403	434	458	478	446	480	506	528
		LO PR	110	117	128	137	117	124	135	144	121	129	141	150	127	135	148	157	133	142	155	165	138	147	160	171

IDB: Entering Indoor Dry Bulb Temperature

Shaded area reflects AHRI (TVA) conditions.

kW = Total system power

High and low pressures are measured at the liquid and suction access fittings.

Amps: Unit amps (comp.+ evaporator + condenser fan motors)

			Outdoor Ambient Temperature																							
			65				75				85				95				105				115			
			Entering Indoor Wet Bulb Temperature																							
IDB	Airflow		59	63	67	71	59	63	67	71	59	63	67	71	59	63	67	71	59	63	67	71	59	63	67	71
70	1050	MBh	34.8	35.3	36.3	-	34.5	35.0	36.0	-	33.6	34.1	35.1	-	32.0	32.5	33.5	-	30.1	30.6	31.6	-	28.4	28.8	29.9	-
		S/T	0.65	0.57	0.42	-	0.65	0.57	0.43	-	0.68	0.60	0.45	-	1.00	0.62	0.47	-	1.00	0.64	0.50	-	1.00	0.70	0.55	-
		ΔT	20	18	15	-	20	18	15	-	20	18	15	-	20	18	15	-	20	18	14	-	21	19	15	-
		kW	2.23	2.23	2.23	-	2.50	2.50	2.50	-	2.80	2.80	2.80	-	3.13	3.12	3.12	-	3.49	3.49	3.48	-	3.91	3.91	3.91	-
		Amps	8.9	8.9	8.9	-	10.1	10.1	10.1	-	11.5	11.5	11.5	-	13.0	13.0	12.9	-	14.6	14.6	14.6	-	16.6	16.6	16.6	-
		HI PR	267	268	270	-	309	310	312	-	353	354	356	-	400	401	403	-	451	453	454	-	506	507	509	-
		LO PR	127	129	132	-	135	137	140	-	142	143	147	-	148	149	152	-	153	155	158	-	160	162	165	-
	1200	MBh	35.3	35.7	36.8	-	34.9	35.4	36.5	-	34.0	34.5	35.6	-	32.5	33.0	34.0	-	30.6	31.0	32.1	-	28.8	29.3	30.3	-
		S/T	0.71	0.63	0.48	-	0.72	0.64	0.49	-	1.00	0.66	0.52	-	1.00	0.68	0.54	-	1.00	0.71	0.56	-	1.00	1.00	0.62	-
		ΔT	19	17	13	-	19	17	13	-	19	17	14	-	19	17	13	-	18	17	13	-	20	18	14	-
		kW	2.25	2.25	2.24	-	2.52	2.51	2.51	-	2.82	2.81	2.81	-	3.14	3.14	3.13	-	3.50	3.50	3.50	-	3.93	3.93	3.92	-
		Amps	8.9	8.9	8.9	-	10.2	10.2	10.1	-	11.6	11.5	11.5	-	13.0	13.0	13.0	-	14.7	14.7	14.7	-	16.6	16.6	16.6	-
		HI PR	269	270	272	-	311	312	314	-	355	356	358	-	402	404	406	-	454	455	457	-	508	509	511	-
		LO PR	129	131	134	-	137	138	142	-	144	145	148	-	149	151	154	-	155	157	160	-	162	164	167	-
	1350	MBh	35.8	36.3	37.3	-	35.5	36.0	37.0	-	34.6	35.1	36.1	-	33.0	33.5	34.5	-	31.1	31.6	32.6	-	29.4	29.9	30.9	-
		S/T	0.75	0.67	0.52	-	0.75	0.67	0.53	-	1.00	0.70	0.55	-	1.00	0.72	0.57	-	1.00	0.74	0.60	-	1.00	1.00	0.65	-
		ΔT	18	16	13	-	18	16	13	-	18	16	13	-	18	16	12	-	18	16	12	-	19	17	13	-
		kW	2.26	2.26	2.25	-	2.53	2.53	2.52	-	2.83	2.83	2.82	-	3.15	3.15	3.15	-	3.51	3.51	3.51	-	3.94	3.94	3.93	-
		Amps	9.0	9.0	9.0	-	10.2	10.2	10.2	-	11.6	11.6	11.6	-	13.1	13.1	13.1	-	14.8	14.7	14.7	-	16.7	16.7	16.7	-
			271	272	274	-	313	314	316	-	357	358	360	-	405	406	408	-	456	457	459	-	510	512	513	-
		LO PR	131	133	136	-	139	141	144	-	146	147	151	-	151	153	156	-	157	159	162	-	164	166	169	-
75	1050	MBh	34.8	35.3	36.3	37.9	34.5	35.0	36.0	37.6	33.6	34.1	35.1	36.7	32.0	32.5	33.6	35.2	30.1	30.6	31.7	33.2	28.4	28.9	29.9	31.5
		S/T	0.78	0.70	0.56	0.41	1.00	0.71	0.56	0.41	1.00	0.74	0.59	0.44	1.00	0.76	0.61	0.46	1.00	1.00	0.64	0.48	1.00	1.00	0.69	0.54
		ΔT	24	22	19	15	24	22	19	15	24	22	19	15	24	22	19	15	24	22	18	15	25	23	19	16
		kW	2.23	2.23	2.22	2.25	2.50	2.50	2.49	2.51	2.80	2.80	2.79	2.81	3.12	3.12	3.12	3.14	3.49	3.49	3.48	3.50	3.91	3.91	3.91	3.93
		Amps	8.9	8.9	8.8	8.9	10.1	10.1	10.1	10.2	11.5	11.5	11.4	11.5	13.0	13.0	12.9	13.0	14.6	14.6	14.6	14.7	16.6	16.6	16.5	16.6
		HI PR	267	268	270	275	309	310	312	317	353	354	356	361	400	402	403	408	452	453	455	459	506	507	509	514
		LO PR	127	129	132	138	135	137	140	145	142	143	147	152	148	149	152	158	153	155	158	163	160	162	165	170
	1200	MBh	35.3	35.8	36.8	38.4	35.0	35.5	36.5	38.1	34.1	34.5	35.6	37.2	32.5	**33.0**	34.0	35.6	30.6	31.1	32.1	33.7	28.8	29.3	30.4	32.0
		S/T	0.85	0.77	0.62	0.47	1.00	0.77	0.63	0.48	1.00	0.80	0.66	0.50	1.00	**0.82**	0.68	0.52	1.00	1.00	0.70	0.55	1.00	1.00	0.75	0.60
		ΔT	23	21	18	14	23	21	17	14	23	21	18	14	23	**21**	17	14	22	21	17	14	24	22	18	15
		kW	2.25	2.24	2.24	2.26	2.51	2.51	2.51	2.53	2.81	2.81	2.81	2.83	3.14	**3.14**	3.13	3.15	3.50	3.50	3.49	3.52	3.93	3.92	3.92	3.94
		Amps	8.9	8.9	8.9	9.0	10.2	10.2	10.1	10.2	11.5	11.5	11.5	11.6	13.0	**13.0**	13.0	13.1	14.7	14.7	14.7	14.8	16.6	16.6	16.6	16.7
		HI PR	269	270	272	277	311	312	314	319	355	356	358	363	403	**404**	406	410	454	455	457	462	509	510	512	516
		LO PR	129	131	134	139	137	138	142	147	144	145	149	154	149	**151**	154	160	155	157	160	165	162	164	167	172
	1350	MBh	35.8	36.3	37.4	38.9	35.5	36.0	37.0	38.6	34.6	35.1	36.1	37.7	33.0	33.5	34.6	36.2	31.1	31.6	32.7	34.2	29.4	29.9	30.9	32.5
		S/T	0.88	0.80	0.66	0.51	1.00	0.81	0.67	0.51	1.00	0.84	0.69	0.54	1.00	0.86	0.71	0.56	1.00	1.00	0.74	0.58	1.00	1.00	0.79	0.64
		ΔT	22	20	17	13	22	20	17	13	22	20	17	13	22	20	17	13	22	20	16	13	23	21	17	14
		kW	2.26	2.25	2.25	2.27	2.53	2.52	2.52	2.54	2.83	2.82	2.82	2.84	3.15	3.15	3.14	3.16	3.51	3.51	3.51	3.53	3.94	3.94	3.93	3.95
		Amps	9.0	9.0	9.0	9.1	10.2	10.2	10.2	10.3	11.6	11.6	11.6	11.7	13.1	13.1	13.1	13.1	14.7	14.7	14.7	14.8	16.7	16.7	16.7	16.8
		HI PR	271	272	274	279	313	315	316	321	357	359	360	365	405	406	408	413	456	457	459	464	511	512	514	518
		LO PR	131	133	136	141	139	141	144	149	146	147	151	156	151	153	156	162	157	159	162	167	164	166	169	174

IDB: Entering Indoor Dry Bulb Temperature

Shaded area reflects ACCA (TVA) conditions.

kW = Total system power

High and low pressures are measured at the liquid and suction access fittings.

Amps: Unit amps (comp.+ evaporator + condenser fan motors)

			65				75				85				95				105				115			
			Entering Indoor Wet Bulb Temperature																							
IDB	Airflow		59	63	67	71	59	63	67	71	59	63	67	71	59	63	67	71	59	63	67	71	59	63	67	71
80	1050	MBh	35.0	35.5	36.5	38.1	34.7	35.2	36.2	37.8	33.8	34.3	35.3	36.9	32.2	32.7	33.7	35.3	30.3	30.8	31.8	33.4	28.6	29.0	30.1	31.7
		S/T	1.00	0.84	0.69	0.54	1.00	0.84	0.70	0.55	1.00	0.87	0.73	0.57	1.00	1.00	0.75	0.59	1.00	1.00	0.77	0.62	1.00	1.00	0.82	0.67
		ΔT	28	26	23	19	28	26	23	19	28	26	23	19	28	26	23	19	28	26	22	19	29	27	24	20
		kW	2.23	2.23	2.23	2.25	2.50	2.50	2.49	2.52	2.80	2.80	2.79	2.82	3.13	3.12	3.12	3.14	3.49	3.49	3.48	3.50	3.91	3.91	3.91	3.93
		Amps	8.9	8.9	8.9	8.9	10.1	10.1	10.1	10.2	11.5	11.5	11.5	11.6	13.0	13.0	12.9	13.0	14.6	14.6	14.6	14.7	16.6	16.6	16.5	16.6
		HI PR	267	269	270	275	309	311	312	317	353	355	357	361	401	402	404	409	452	453	455	460	507	508	510	514
		LO PR	128	129	133	138	136	137	140	146	142	144	147	153	148	150	153	158	154	155	159	164	161	162	166	171
	1200	MBh	35.5	35.9	37.0	38.6	35.1	35.6	36.7	38.3	34.2	34.7	35.8	37.4	32.7	33.2	**34.2**	35.8	30.8	31.2	32.3	33.9	29.0	29.5	30.5	32.1
		S/T	1.00	0.90	0.76	0.60	1.00	0.91	0.76	0.61	1.00	1.00	0.79	0.64	1.00	1.00	**0.81**	0.66	1.00	1.00	0.83	0.68	1.00	1.00	1.00	0.74
		ΔT	27	25	22	18	27	25	22	18	27	25	22	18	27	25	**22**	18	27	25	21	18	28	26	22	19
		kW	2.25	2.24	2.24	2.26	2.52	2.51	2.51	2.53	2.82	2.81	2.81	2.83	3.14	3.14	**3.13**	3.15	3.50	3.50	3.50	3.52	3.93	3.93	3.92	3.94
		Amps	8.9	8.9	8.9	9.0	10.2	10.2	10.1	10.2	11.6	11.5	11.5	11.6	13.0	13.0	**13.0**	13.1	14.7	14.7	14.7	14.8	16.6	16.6	16.6	16.7
		HI PR	270	271	273	277	312	313	315	319	356	357	359	363	403	404	**406**	411	454	456	457	462	509	510	512	517
		LO PR	130	131	135	140	137	139	142	148	144	146	149	154	150	152	**155**	160	156	157	160	166	163	164	167	173
	1350	MBh	36.0	36.5	37.5	39.1	35.7	36.2	37.2	38.8	34.8	35.3	36.3	37.9	33.2	33.7	34.7	36.3	31.3	31.8	32.8	34.4	29.6	30.1	31.1	32.7
		S/T	1.00	0.94	0.79	0.64	1.00	0.94	0.80	0.65	1.00	1.00	0.83	0.67	1.00	1.00	0.85	0.69	1.00	1.00	0.87	0.72	1.00	1.00	1.00	0.77
		ΔT	26	24	21	17	26	24	21	17	26	24	21	17	26	24	21	17	26	24	20	17	27	25	22	18
		kW	2.26	2.26	2.25	2.27	2.53	2.53	2.52	2.54	2.83	2.83	2.82	2.84	3.15	3.15	3.15	3.17	3.51	3.51	3.51	3.53	3.94	3.94	3.93	3.95
		Amps	9.0	9.0	9.0	9.1	10.2	10.2	10.2	10.3	11.6	11.6	11.6	11.7	13.1	13.1	13.1	13.2	14.7	14.7	14.7	14.8	16.7	16.7	16.7	16.8
		HI PR	272	273	275	279	314	315	317	322	358	359	361	366	405	407	408	413	457	458	460	464	511	512	514	519
		LO PR	132	133	137	142	140	141	144	150	146	148	151	157	152	154	157	162	158	159	162	168	165	166	170	175
85	1050	MBh	35.6	36.1	37.1	38.7	35.3	35.8	36.8	38.4	34.4	34.9	35.9	37.5	32.8	33.3	34.3	35.9	30.9	31.4	32.4	34.0	29.1	29.6	30.7	32.3
		S/T	1.00	0.94	0.80	0.65	1.00	1.00	0.81	0.65	1.00	1.00	0.83	0.68	1.00	1.00	0.85	0.70	1.00	1.00	1.00	0.73	1.00	1.00	1.00	0.78
		ΔT	32	30	26	23	32	30	26	23	32	30	27	23	32	30	26	23	31	29	26	22	32	31	27	24
		kW	2.24	2.24	2.23	2.25	2.51	2.50	2.50	2.52	2.81	2.80	2.80	2.82	3.13	3.13	3.12	3.15	3.49	3.49	3.49	3.51	3.92	3.92	3.91	3.93
		Amps	8.9	8.9	8.9	9.0	10.1	10.1	10.1	10.2	11.5	11.5	11.5	11.6	13.0	13.0	13.0	13.1	14.7	14.6	14.6	14.7	16.6	16.6	16.6	16.7
		HI PR	269	270	272	276	311	312	314	318	355	356	358	362	402	403	405	410	453	455	456	461	508	509	511	516
		LO PR	130	131	135	140	138	139	142	148	144	146	149	155	150	152	155	160	156	157	160	166	163	164	168	173
	1200	MBh	36.0	36.5	37.6	39.2	35.7	36.2	37.3	38.8	34.8	35.3	36.3	37.9	33.3	33.7	34.8	36.4	31.3	31.8	32.9	34.5	29.6	30.1	31.1	32.7
		S/T	1.00	1.00	0.86	0.71	1.00	1.00	0.87	0.72	1.00	1.00	0.90	0.75	1.00	1.00	0.92	0.77	1.00	1.00	1.00	0.79	1.00	1.00	1.00	0.84
		ΔT	30	29	25	22	30	29	25	22	31	29	25	22	30	29	25	22	30	28	25	21	31	29	26	22
		kW	2.25	2.25	2.25	2.27	2.52	2.52	2.51	2.53	2.82	2.82	2.81	2.83	3.15	3.14	3.14	3.16	3.51	3.51	3.50	3.52	3.93	3.93	3.93	3.95
		Amps	9.0	9.0	8.9	9.0	10.2	10.2	10.2	10.3	11.6	11.6	11.5	11.6	13.1	13.0	13.0	13.1	14.7	14.7	14.7	14.8	16.7	16.7	16.6	16.7
		HI PR	271	272	274	279	313	314	316	321	357	358	360	365	404	406	408	412	456	457	459	463	510	511	513	518
		LO PR	132	133	136	142	139	141	144	150	146	148	151	156	152	153	157	162	158	159	162	168	165	166	169	175
	1350	MBh	36.6	37.1	38.1	39.7	36.3	36.8	37.8	39.4	35.4	35.9	36.9	38.5	33.8	34.3	35.3	36.9	31.9	32.4	33.4	35.0	30.1	30.6	31.7	33.3
		S/T	1.00	1.00	0.90	0.75	1.00	1.00	0.91	0.75	1.00	1.00	0.93	0.78	1.00	1.00	1.00	0.80	1.00	1.00	1.00	0.83	1.00	1.00	1.00	0.88
		ΔT	30	28	24	21	29	28	24	21	30	28	24	21	29	28	24	21	29	27	24	20	30	29	25	22
		kW	2.26	2.26	2.26	2.28	2.53	2.53	2.53	2.55	2.83	2.83	2.83	2.85	3.16	3.15	3.15	3.17	3.52	3.52	3.51	3.53	3.95	3.94	3.94	3.96
		Amps	9.0	9.0	9.0	9.1	10.3	10.2	10.2	10.3	11.6	11.6	11.6	11.7	13.1	13.1	13.1	13.2	14.8	14.8	14.7	14.8	16.7	16.7	16.7	16.8
		HI PR	273	274	276	281	315	316	318	323	359	360	362	367	407	408	410	414	458	459	461	466	512	514	515	520
		LO PR	134	135	139	144	141	143	146	152	148	150	153	158	154	156	159	164	160	161	164	170	167	168	171	177

IDB: Entering Indoor Dry Bulb Temperature

Shaded area reflects AHRI (TVA) conditions.

kW = Total system power

High and low pressures are measured at the liquid and suction access fittings.

Amps: Unit amps (comp.+ evaporator + condenser fan motors)

			Outdoor Ambient Temperature																							
			65				75				85				95				105				115			
			Entering Indoor Wet Bulb Temperature																							
IDB	Airflow		59	63	67	71	59	63	67	71	59	63	67	71	59	63	67	71	59	63	67	71	59	63	67	71
70	1443	MBh	40.0	41.4	45.4	-	39.0	40.5	44.3	-	38.1	39.5	43.3	-	37.2	38.5	42.2	-	35.3	36.6	40.1	-	32.7	33.9	37.2	-
		S/T	0.75	0.63	0.44	-	0.78	0.65	0.45	-	0.80	0.67	0.46	-	0.83	0.69	0.48	-	0.86	0.72	0.50	-	0.86	0.72	0.50	-
		ΔT	19	17	13	-	19	17	13	-	19	17	13	-	20	17	13	-	19	17	13	-	18	16	12	-
		kW	2.68	2.73	2.82	-	2.88	2.94	3.03	-	3.05	3.12	3.21	-	3.21	3.27	3.38	-	3.34	3.41	3.52	-	3.45	3.53	3.64	-
		Amps	12.9	13.1	13.4	-	13.7	13.9	14.3	-	14.6	14.9	15.2	-	15.4	15.7	16.1	-	16.1	16.5	16.9	-	16.9	17.3	17.7	-
		HI PR	236	254	269	-	265	285	301	-	302	325	343	-	343	370	390	-	386	416	439	-	427	459	485	-
		LO PR	107	113	124	-	113	120	131	-	117	124	136	-	123	131	143	-	129	137	150	-	133	142	155	-
	1286	MBh	38.8	40.2	44.1	-	37.9	39.3	43.0	-	37.0	38.3	42.0	-	36.1	37.4	41.0	-	34.3	35.5	38.9	-	31.8	32.9	36.1	-
		S/T	0.72	0.60	0.42	-	0.74	0.62	0.43	-	0.76	0.64	0.44	-	0.79	0.66	0.46	-	0.82	0.68	0.47	-	0.82	0.69	0.48	-
		ΔT	20	17	13	-	20	17	13	-	20	17	13	-	20	18	13	-	20	17	13	-	19	16	12	-
		kW	2.66	2.71	2.79	-	2.85	2.91	3.00	-	3.03	3.09	3.19	-	3.18	3.25	3.35	-	3.31	3.38	3.49	-	3.42	3.50	3.61	-
		Amps	12.8	13.0	13.4	-	13.6	13.8	14.2	-	14.5	14.7	15.1	-	15.3	15.5	16.0	-	16.0	16.3	16.8	-	16.8	17.1	17.6	-
		HI PR	234	252	266	-	263	283	298	-	299	321	339	-	340	366	386	-	383	412	435	-	423	455	480	-
		LO PR	105	112	123	-	111	119	129	-	116	123	135	-	122	129	141	-	128	136	148	-	132	140	153	-
	1128	MBh	35.8	37.1	40.7	-	35.0	36.3	39.7	-	34.1	35.4	38.8	-	33.3	34.5	37.8	-	31.6	32.8	35.9	-	29.3	30.4	33.3	-
		S/T	0.69	0.58	0.40	-	0.72	0.60	0.41	-	0.74	0.61	0.43	-	0.76	0.63	0.44	-	0.79	0.66	0.46	-	0.79	0.66	0.46	-
		ΔT	20	17	13	-	20	18	13	-	20	18	13	-	21	18	14	-	20	18	13	-	19	16	12	-
		kW	2.60	2.65	2.73	-	2.79	2.84	2.93	-	2.96	3.02	3.11	-	3.10	3.17	3.27	-	3.23	3.30	3.40	-	3.34	3.41	3.52	-
		Amps	12.5	12.8	13.1	-	13.3	13.5	13.9	-	14.2	14.4	14.8	-	14.9	15.2	15.6	-	15.7	16.0	16.4	-	16.4	16.7	17.2	-
		HI PR	227	244	258	-	255	274	289	-	290	312	329	-	330	355	375	-	371	399	422	-	410	441	466	-
		LO PR	102	109	119	-	108	115	126	-	112	120	130	-	118	126	137	-	124	132	144	-	128	136	149	-
75	1443	MBh	40.6	41.8	45.3	48.6	39.7	40.9	44.2	47.5	38.8	39.9	43.2	46.3	37.8	38.9	42.1	45.2	35.9	37.0	40.0	43.0	33.3	34.3	37.1	39.8
		S/T	0.86	0.76	0.58	0.37	0.89	0.79	0.60	0.39	0.91	0.81	0.62	0.40	0.94	0.84	0.64	0.41	0.97	0.87	0.66	0.42	0.98	0.88	0.66	0.43
		ΔT	22	20	17	12	22	21	17	12	22	21	17	12	23	21	17	12	22	21	17	12	21	19	16	11
		kW	2.70	2.75	2.84	2.93	2.90	2.96	3.05	3.15	3.08	3.14	3.24	3.34	3.23	3.30	3.41	3.52	3.36	3.44	3.55	3.67	3.48	3.56	3.67	3.79
		Amps	13.0	13.2	13.5	13.9	13.8	14.0	14.4	14.8	14.7	15.0	15.4	15.8	15.5	15.8	16.2	16.7	16.3	16.6	17.0	17.6	17.0	17.4	17.9	18.4
		HI PR	239	257	271	283	268	288	304	317	305	328	346	361	347	373	394	411	390	420	444	463	431	464	490	511
		LO PR	108	115	125	133	114	121	132	141	118	126	137	146	124	132	144	154	130	138	151	161	135	143	156	166
	1286	MBh	39.5	40.6	44.0	47.2	38.5	39.7	43.0	46.1	37.6	38.7	41.9	45.0	36.7	**37.8**	40.9	43.9	34.9	35.9	38.9	41.7	32.3	33.3	36.0	38.6
		S/T	0.82	0.73	0.55	0.36	0.85	0.76	0.57	0.37	0.87	0.78	0.59	0.38	0.89	**0.80**	0.61	0.39	0.93	0.83	0.63	0.40	0.94	0.84	0.63	0.41
		ΔT	23	21	17	12	23	21	18	12	23	21	18	12	23	**22**	18	12	23	21	17	12	22	20	16	11
		kW	2.68	2.73	2.82	2.90	2.88	2.94	3.03	3.12	3.05	3.12	3.21	3.32	3.21	**3.28**	3.38	3.49	3.34	3.41	3.52	3.64	3.45	3.53	3.64	3.76
		Amps	12.9	13.1	13.4	13.8	13.7	13.9	14.3	14.7	14.6	14.9	15.2	15.7	15.4	**15.7**	16.1	16.6	16.1	16.5	16.9	17.4	16.9	17.3	17.7	18.3
		HI PR	236	254	269	280	265	285	301	314	302	325	343	358	344	**370**	390	407	387	416	439	458	427	460	485	506
		LO PR	107	113	124	132	113	120	131	139	117	124	136	145	123	**131**	143	152	129	137	150	159	133	142	155	165
	1128	MBh	36.4	37.5	40.6	43.6	35.6	36.6	39.6	42.5	34.7	35.8	38.7	41.5	33.9	34.9	37.8	40.5	32.2	33.1	35.9	38.5	29.8	30.7	33.2	35.7
		S/T	0.79	0.70	0.53	0.34	0.82	0.73	0.55	0.35	0.84	0.75	0.57	0.36	0.86	0.77	0.58	0.38	0.90	0.80	0.61	0.39	0.90	0.81	0.61	0.39
		ΔT	23	22	18	12	24	22	18	12	24	22	18	12	24	22	18	12	23	22	18	12	22	20	17	11
		kW	2.62	2.67	2.75	2.84	2.81	2.87	2.96	3.05	2.98	3.04	3.14	3.24	3.13	3.20	3.30	3.40	3.26	3.33	3.43	3.55	3.37	3.44	3.55	3.67
		Amps	12.6	12.9	13.2	13.5	13.4	13.6	14.0	14.4	14.3	14.5	14.9	15.4	15.0	15.3	15.7	16.2	15.8	16.1	16.5	17.0	16.5	16.9	17.3	17.9
		HI PR	229	247	261	272	257	277	292	305	293	315	332	347	333	359	379	395	375	403	426	444	414	446	471	491
		LO PR	103	110	120	128	109	116	127	135	114	121	132	140	119	127	138	147	125	133	145	155	129	137	150	160

IDB: Entering Indoor Dry Bulb Temperature

Shaded area reflects ACCA (TVA) conditions.

kW = Total system power

High and low pressures are measured at the liquid and suction access fittings.

Amps: Unit amps (comp.+ evaporator + condenser fan motors)

			Outdoor Ambient Temperature																							
			65				75				85				95				105				115			
			Entering Indoor Wet Bulb Temperature																							
IDB	Airflow		59	63	67	71	59	63	67	71	59	63	67	71	59	63	67	71	59	63	67	71	59	63	67	71
80	1443	MBh	41.4	42.3	45.2	48.3	40.4	41.3	44.1	47.1	39.4	40.3	43.1	46.0	38.5	39.3	42.0	44.9	36.6	37.4	39.9	42.7	33.9	34.6	37.0	39.5
		S/T	0.94	0.88	0.72	0.54	1.00	0.91	0.74	0.55	1.00	0.93	0.76	0.57	1.00	0.97	0.79	0.59	1.00	1.00	0.82	0.61	1.00	1.00	0.82	0.61
		ΔT	25	24	21	16	26	24	21	17	25	24	21	17	25	24	21	17	23	24	21	17	22	22	19	15
		kW	2.72	2.78	2.86	2.95	2.92	2.98	3.08	3.17	3.10	3.17	3.27	3.37	3.26	3.33	3.44	3.55	3.39	3.47	3.58	3.70	3.51	3.59	3.70	3.82
		Amps	13.1	13.3	13.6	14.0	13.9	14.1	14.5	14.9	14.8	15.1	15.5	15.9	15.6	15.9	16.3	16.8	16.4	16.7	17.2	17.7	17.2	17.5	18.0	18.6
		HI PR	241	260	274	286	271	291	307	321	308	331	350	365	350	377	398	415	394	424	448	467	436	469	495	516
		LO PR	109	116	126	134	115	122	133	142	119	127	139	148	125	133	146	155	131	140	153	163	136	145	158	168
	1286	MBh	40.2	41.0	43.8	46.9	39.2	40.1	42.8	45.8	38.3	39.1	41.8	44.7	37.4	38.2	**40.8**	43.6	35.5	36.3	38.7	41.4	32.9	33.6	35.9	38.4
		S/T	0.89	0.84	0.68	0.51	0.93	0.87	0.71	0.53	0.95	0.89	0.73	0.54	0.98	0.92	**0.75**	0.56	1.00	0.96	0.78	0.58	1.00	0.96	0.78	0.59
		ΔT	26	25	21	17	26	25	22	17	26	25	22	17	26	25	**22**	17	25	25	22	17	24	23	20	16
		kW	2.70	2.75	2.84	2.93	2.90	2.96	3.05	3.15	3.08	3.14	3.24	3.35	3.23	3.30	**3.41**	3.52	3.37	3.44	3.55	3.67	3.48	3.56	3.67	3.79
		Amps	13.0	13.2	13.5	13.9	13.8	14.0	14.4	14.8	14.7	15.0	15.4	15.8	15.5	15.8	**16.2**	16.7	16.3	16.6	17.0	17.6	17.1	17.4	17.9	18.4
		HI PR	239	257	271	283	268	288	304	318	305	328	346	361	347	373	**394**	411	390	420	444	463	431	464	490	511
		LO PR	108	115	125	133	114	121	132	141	118	126	137	146	124	132	**144**	154	130	138	151	161	135	143	156	166
	1128	MBh	37.1	37.9	40.5	43.3	36.2	37.0	39.5	42.3	35.3	36.1	38.6	41.2	34.5	35.2	37.6	40.2	32.8	33.5	35.8	38.2	30.3	31.0	33.1	35.4
		S/T	0.86	0.81	0.66	0.49	0.89	0.84	0.68	0.51	0.92	0.86	0.70	0.52	0.95	0.89	0.72	0.54	0.98	0.92	0.75	0.56	0.99	0.93	0.76	0.57
		ΔT	26	25	22	17	26	25	22	18	26	25	22	18	27	25	22	18	26	25	22	17	24	23	20	16
		kW	2.64	2.69	2.77	2.86	2.83	2.89	2.98	3.07	3.00	3.07	3.16	3.26	3.15	3.22	3.32	3.43	3.28	3.35	3.46	3.57	3.39	3.47	3.58	3.70
		Amps	12.7	12.9	13.3	13.6	13.5	13.7	14.1	14.5	14.4	14.6	15.0	15.5	15.1	15.4	15.8	16.3	15.9	16.2	16.7	17.2	16.7	17.0	17.5	18.0
		HI PR	232	249	263	274	260	280	295	308	296	318	336	350	337	362	383	399	379	408	430	449	418	450	475	496
		LO PR	104	111	121	129	110	117	128	136	115	122	133	142	120	128	140	149	126	134	147	156	131	139	152	161
85	1443	MBh	42.1	42.9	44.9	47.9	41.1	41.9	43.9	46.8	40.1	40.9	42.8	45.7	39.1	39.9	41.8	44.6	37.2	37.9	39.7	42.4	34.5	35.1	36.8	39.2
		S/T	0.98	0.95	0.86	0.69	1.00	0.98	0.89	0.72	1.00	1.00	0.91	0.74	1.00	1.00	0.94	0.76	1.00	1.00	0.97	0.79	1.00	1.00	0.98	0.80
		ΔT	26	26	25	21	26	26	25	21	26	26	25	21	25	25	25	22	24	24	25	21	22	22	23	20
		kW	2.74	2.80	2.88	2.97	2.94	3.01	3.10	3.20	3.13	3.19	3.29	3.40	3.28	3.36	3.46	3.58	3.42	3.49	3.61	3.73	3.54	3.61	3.73	3.86
		Amps	13.2	13.4	13.7	14.1	14.0	14.2	14.6	15.0	14.9	15.2	15.6	16.1	15.7	16.0	16.4	16.9	16.5	16.8	17.3	17.8	17.3	17.7	18.1	18.7
		HI PR	244	262	277	289	273	294	311	324	311	334	353	368	354	381	402	420	398	429	453	472	440	474	500	522
		LO PR	110	117	128	136	116	123	135	144	121	128	140	149	127	135	147	157	133	141	154	164	137	146	159	170
	1286	MBh	40.9	41.7	43.6	46.5	39.9	40.7	42.6	45.5	39.0	39.7	41.6	44.4	38.0	38.7	40.6	43.3	36.1	36.8	38.5	41.1	33.4	34.1	35.7	38.1
		S/T	0.94	0.90	0.82	0.66	0.97	0.94	0.85	0.69	1.00	0.96	0.87	0.70	1.00	0.99	0.90	0.73	1.00	1.00	0.93	0.75	1.00	1.00	0.94	0.76
		ΔT	27	27	25	22	28	27	26	22	28	27	26	22	27	28	26	23	26	26	26	22	24	24	24	21
		kW	2.72	2.78	2.86	2.95	2.92	2.98	3.08	3.17	3.10	3.17	3.27	3.37	3.26	3.33	3.44	3.55	3.39	3.47	3.58	3.70	3.51	3.59	3.70	3.82
		Amps	13.1	13.3	13.6	14.0	13.9	14.1	14.5	14.9	14.8	15.1	15.5	15.9	15.6	15.9	16.3	16.8	16.4	16.7	17.2	17.7	17.2	17.5	18.0	18.6
		HI PR	241	260	274	286	271	291	307	321	308	331	350	365	350	377	398	415	394	424	448	467	436	469	495	516
		LO PR	109	116	126	134	115	122	133	142	119	127	139	148	125	133	146	155	131	140	153	163	136	145	158	168
	1128	MBh	37.7	38.4	40.3	43.0	36.8	37.5	39.3	42.0	36.0	36.7	38.4	41.0	35.1	35.8	37.5	40.0	33.3	34.0	35.6	38.0	30.9	31.5	33.0	35.2
		S/T	0.90	0.87	0.79	0.64	0.94	0.90	0.82	0.66	0.96	0.93	0.84	0.68	0.99	0.96	0.86	0.70	1.00	0.99	0.90	0.73	1.00	1.00	0.90	0.73
		ΔT	28	27	26	22	28	28	26	23	28	28	26	23	28	28	26	23	27	28	26	23	25	26	24	21
		kW	2.66	2.71	2.79	2.88	2.85	2.91	3.00	3.10	3.03	3.09	3.19	3.29	3.18	3.25	3.35	3.46	3.31	3.38	3.49	3.60	3.42	3.50	3.61	3.73
		Amps	12.8	13.0	13.3	13.7	13.6	13.8	14.2	14.6	14.5	14.7	15.1	15.6	15.2	15.5	16.0	16.4	16.0	16.3	16.8	17.3	16.8	17.1	17.6	18.1
		HI PR	234	252	266	277	262	282	298	311	299	321	339	354	340	366	386	403	382	412	435	453	423	455	480	501
		LO PR	105	112	122	130	111	119	129	138	116	123	134	143	122	129	141	150	127	136	148	158	132	140	153	163

IDB: Entering Indoor Dry Bulb Temperature

Shaded area reflects AHRI (TVA) conditions.

kW = Total system power

High and low pressures are measured at the liquid and suction access fittings.

Amps: Unit amps (comp.+ evaporator + condenser fan motors)

			Outdoor Ambient Temperature																							
			65				75				85				95				105				115			
			Entering Indoor Wet Bulb Temperature																							
IDB	Airflow		59	63	67	71	59	63	67	71	59	63	67	71	59	63	67	71	59	63	67	71	59	63	67	71
70	1300	MBh	41.2	41.8	43.0	-	40.9	41.4	42.7	-	39.8	40.4	41.6	-	38.0	38.5	39.8	-	35.7	36.3	37.5	-	33.7	34.3	35.5	-
		S/T	0.69	0.61	0.47	-	0.69	0.62	0.48	-	0.72	0.64	0.50	-	1.00	0.66	0.52	-	1.00	0.68	0.54	-	1.00	0.74	0.60	-
		ΔT	19	18	14	-	19	17	14	-	20	18	14	-	19	17	14	-	19	17	14	-	20	18	15	-
		kW	2.61	2.61	2.60	-	2.93	2.93	2.92	-	3.29	3.29	3.28	-	3.67	3.67	3.67	-	4.10	4.10	4.10	-	4.61	4.61	4.60	-
		Amps	10.3	10.3	10.2	-	11.7	11.7	11.7	-	13.4	13.3	13.3	-	15.1	15.1	15.1	-	17.1	17.1	17.1	-	19.4	19.4	19.4	-
		HI PR	274	275	277	-	317	318	320	-	362	363	365	-	410	411	413	-	462	463	465	-	518	519	521	-
		LO PR	126	128	131	-	134	135	139	-	141	142	145	-	146	148	151	-	152	153	156	-	159	160	163	-
	1400	MBh	41.6	42.2	43.4	-	41.2	41.8	43.0	-	40.2	40.8	42.0	-	38.4	38.9	40.1	-	36.1	36.7	37.9	-	34.1	34.7	35.9	-
		S/T	0.71	0.63	0.49	-	0.72	0.64	0.50	-	0.75	0.67	0.53	-	1.00	0.69	0.55	-	1.00	0.71	0.57	-	1.00	0.76	0.62	-
		ΔT	19	17	13	-	19	17	13	-	19	17	14	-	19	17	13	-	18	17	13	-	20	18	14	-
		kW	2.62	2.62	2.61	-	2.94	2.94	2.93	-	3.30	3.29	3.29	-	3.68	3.68	3.67	-	4.11	4.11	4.11	-	4.62	4.62	4.61	-
		Amps	10.3	10.3	10.3	-	11.8	11.8	11.7	-	13.4	13.4	13.4	-	15.2	15.2	15.1	-	17.1	17.1	17.1	-	19.4	19.4	19.4	-
		HI PR	275	277	278	-	318	319	321	-	363	364	366	-	411	413	415	-	464	465	467	-	519	520	522	-
		LO PR	128	129	132	-	135	137	140	-	142	143	147	-	147	149	152	-	153	154	158	-	160	161	165	-
	1575	MBh	42.4	43.0	44.2	-	42.0	42.6	43.8	-	41.0	41.5	42.8	-	39.1	39.7	40.9	-	36.9	37.5	38.7	-	34.9	35.4	36.7	-
		S/T	0.73	0.66	0.52	-	0.74	0.66	0.52	-	1.00	0.69	0.55	-	1.00	0.71	0.57	-	1.00	0.73	0.59	-	1.00	1.00	0.64	-
		ΔT	18	16	12	-	18	16	12	-	18	16	13	-	18	16	12	-	18	16	12	-	19	17	13	-
		kW	2.64	2.63	2.63	-	2.95	2.95	2.95	-	3.31	3.31	3.30	-	3.70	3.69	3.69	-	4.13	4.12	4.12	-	4.63	4.63	4.62	-
		Amps	10.4	10.4	10.3	-	11.8	11.8	11.8	-	13.5	13.4	13.4	-	15.2	15.2	15.2	-	17.2	17.2	17.2	-	19.5	19.5	19.5	-
		HI PR	278	279	281	-	321	322	324	-	366	367	369	-	414	415	417	-	466	467	469	-	522	523	525	-
		LO PR	130	132	135	-	138	139	142	-	144	146	149	-	150	151	155	-	155	157	160	-	162	164	167	-
75	1300	MBh	41.3	41.8	43.0	44.9	40.9	41.5	42.7	44.5	39.8	40.4	41.6	43.5	38.0	**38.6**	39.8	41.6	35.8	36.3	37.6	39.4	33.7	34.3	35.5	37.4
		S/T	0.82	0.74	0.60	0.46	1.00	0.75	0.61	0.46	1.00	0.78	0.64	0.49	1.00	**0.80**	0.66	0.51	1.00	0.82	0.68	0.53	1.00	1.00	0.73	0.58
		ΔT	24	22	18	14	24	22	18	14	24	22	18	15	24	**22**	18	14	23	21	18	14	24	23	19	15
		kW	2.61	2.61	2.60	2.63	2.93	2.93	2.92	2.95	3.29	3.28	3.28	3.30	3.67	**3.67**	3.66	3.69	4.10	4.10	4.09	4.12	4.61	4.61	4.60	4.62
		Amps	10.3	10.2	10.2	10.3	11.7	11.7	11.7	11.8	13.3	13.3	13.3	13.4	15.1	**15.1**	15.1	15.2	17.1	17.1	17.0	17.2	19.4	19.4	19.4	19.5
		HI PR	274	275	277	282	317	318	320	325	362	363	365	370	410	**411**	413	418	462	464	466	470	518	519	521	526
		LO PR	126	128	131	136	134	136	139	144	141	142	145	151	146	**148**	151	156	152	153	156	162	159	160	163	169
	1400	MBh	41.6	42.2	43.4	45.3	41.3	41.8	43.1	44.9	40.2	40.8	42.0	43.9	38.4	39.0	40.2	42.0	36.1	36.7	37.9	39.8	34.1	34.7	35.9	37.8
		S/T	0.85	0.77	0.63	0.48	1.00	0.77	0.63	0.49	1.00	0.80	0.66	0.51	1.00	0.82	0.68	0.53	1.00	0.84	0.70	0.56	1.00	1.00	0.76	0.61
		ΔT	23	21	18	14	23	21	17	14	23	21	18	14	23	21	17	14	23	21	17	14	24	22	18	15
		kW	2.62	2.62	2.61	2.64	2.94	2.94	2.93	2.95	3.29	3.29	3.29	3.31	3.68	3.68	3.67	3.70	4.11	4.11	4.10	4.13	4.62	4.61	4.61	4.63
		Amps	10.3	10.3	10.3	10.4	11.8	11.7	11.7	11.8	13.4	13.4	13.4	13.5	15.2	15.1	15.1	15.2	17.1	17.1	17.1	17.2	19.4	19.4	19.4	19.5
		HI PR	276	277	279	283	318	320	322	326	363	365	366	371	412	413	415	420	464	465	467	472	519	521	523	527
		LO PR	128	129	132	138	135	137	140	145	142	143	147	152	147	149	152	157	153	154	158	163	160	161	165	170
	1575	MBh	42.4	43.0	44.2	46.1	42.1	42.6	43.8	45.7	41.0	41.6	42.8	44.6	39.2	39.7	40.9	42.8	36.9	37.5	38.7	40.6	34.9	35.5	36.7	38.5
		S/T	0.87	0.79	0.65	0.50	1.00	0.80	0.65	0.51	1.00	0.82	0.68	0.53	1.00	0.84	0.70	0.55	1.00	1.00	0.72	0.58	1.00	1.00	0.78	0.63
		ΔT	22	20	17	13	22	20	17	13	22	20	17	13	22	20	17	13	22	20	16	13	23	21	17	14
		kW	2.63	2.63	2.63	2.65	2.95	2.95	2.94	2.97	3.31	3.31	3.30	3.32	3.69	3.69	3.69	3.71	4.12	4.12	4.12	4.14	4.63	4.63	4.62	4.65
		Amps	10.4	10.3	10.3	10.4	11.8	11.8	11.8	11.9	13.5	13.4	13.4	13.5	15.2	15.2	15.2	15.3	17.2	17.2	17.2	17.3	19.5	19.5	19.5	19.6
		HI PR	278	279	281	286	321	322	324	329	366	367	369	374	414	415	417	422	466	467	469	474	522	523	525	530
		LO PR	130	132	135	140	138	139	142	148	144	146	149	154	150	151	155	160	155	157	160	165	162	164	167	172

IDB: Entering Indoor Dry Bulb Temperature

Shaded area reflects ACCA (TVA) conditions.

kW = Total system power

High and low pressures are measured at the liquid and suction access fittings.

Amps: Unit amps (comp.+ evaporator + condenser fan motors)

			Outdoor Ambient Temperature																							
			65				75				85				95				105				115			
			Entering Indoor Wet Bulb Temperature																							
IDB	Airflow		59	63	67	71	59	63	67	71	59	63	67	71	59	63	67	71	59	63	67	71	59	63	67	71
80	1300	MBh	41.5	42.0	43.3	45.1	41.1	41.7	42.9	44.7	40.0	40.6	41.8	43.7	38.2	38.8	**40.0**	41.9	36.0	36.5	37.8	39.6	33.9	34.5	35.7	37.6
		S/T	1.00	0.87	0.73	0.58	1.00	0.88	0.74	0.59	1.00	0.91	0.76	0.62	1.00	1.00	**0.79**	0.64	1.00	1.00	0.81	0.66	1.00	1.00	0.86	0.71
		ΔT	28	26	22	19	28	26	22	19	28	26	23	19	28	26	**22**	19	28	26	22	18	29	27	23	20
		kW	2.61	2.61	2.60	2.63	2.93	2.93	2.92	2.95	3.29	3.29	3.28	3.30	3.67	3.67	**3.67**	3.69	4.10	4.10	4.10	4.12	4.61	4.61	4.60	4.63
		Amps	10.3	10.3	10.2	10.3	11.7	11.7	11.7	11.8	13.4	13.3	13.3	13.4	15.1	15.1	**15.1**	15.2	17.1	17.1	17.1	17.2	19.4	19.4	19.4	19.5
		HI PR	275	276	278	283	318	319	321	325	362	364	366	370	411	412	**414**	419	463	464	466	471	519	520	522	526
		LO PR	127	128	132	137	135	136	139	145	141	143	146	151	147	148	**151**	157	152	154	157	162	159	161	164	169
	1400	MBh	41.8	42.4	43.6	45.5	41.5	42.1	43.3	45.1	40.4	41.0	42.2	44.1	38.6	39.2	40.4	42.2	36.4	36.9	38.1	40.0	34.3	34.9	36.1	38.0
		S/T	1.00	0.90	0.76	0.61	1.00	0.90	0.76	0.62	1.00	0.93	0.79	0.64	1.00	1.00	0.81	0.66	1.00	1.00	0.83	0.68	1.00	1.00	0.89	0.74
		ΔT	27	25	22	18	27	25	22	18	27	26	22	18	27	25	22	18	27	25	21	18	28	26	23	19
		kW	2.62	2.62	2.61	2.64	2.94	2.94	2.93	2.96	3.30	3.29	3.29	3.31	3.68	3.68	3.67	3.70	4.11	4.11	4.10	4.13	4.62	4.62	4.61	4.63
		Amps	10.3	10.3	10.3	10.4	11.8	11.8	11.7	11.8	13.4	13.4	13.4	13.5	15.2	15.1	15.1	15.2	17.1	17.1	17.1	17.2	19.4	19.4	19.4	19.5
		HI PR	276	277	279	284	319	320	322	327	364	365	367	372	412	413	415	420	464	466	467	472	520	521	523	528
		LO PR	128	130	133	138	136	137	140	146	142	144	147	152	148	150	153	158	154	155	158	164	160	162	165	170
	1575	MBh	42.6	43.2	44.4	46.3	42.3	42.8	44.1	45.9	41.2	41.8	43.0	44.8	39.4	39.9	41.2	43.0	37.1	37.7	38.9	40.8	35.1	35.7	36.9	38.7
		S/T	1.00	0.92	0.78	0.63	1.00	0.92	0.78	0.64	1.00	1.00	0.81	0.66	1.00	1.00	0.83	0.68	1.00	1.00	0.85	0.71	1.00	1.00	1.00	0.76
		ΔT	26	24	21	17	26	24	21	17	26	25	21	17	26	24	21	17	26	24	20	17	27	25	22	18
		kW	2.63	2.63	2.63	2.65	2.95	2.95	2.95	2.97	3.31	3.31	3.30	3.33	3.70	3.69	3.69	3.71	4.13	4.12	4.12	4.14	4.63	4.63	4.62	4.65
		Amps	10.4	10.4	10.3	10.4	11.8	11.8	11.8	11.9	13.5	13.4	13.4	13.5	15.2	15.2	15.2	15.3	17.2	17.2	17.2	17.3	19.5	19.5	19.5	19.6
		HI PR	279	280	282	286	321	323	324	329	366	367	369	374	415	416	418	422	467	468	470	475	522	524	525	530
		LO PR	131	132	135	141	138	140	143	148	145	146	149	155	150	152	155	160	156	157	161	166	163	164	167	173
85	1300	MBh	42.2	42.7	43.9	45.8	41.8	42.4	43.6	45.4	40.7	41.3	42.5	44.4	38.9	39.5	40.7	42.5	36.7	37.2	38.5	40.3	34.6	35.2	36.4	38.3
		S/T	1.00	0.98	0.84	0.69	1.00	1.00	0.84	0.70	1.00	1.00	0.87	0.72	1.00	1.00	0.89	0.74	1.00	1.00	1.00	0.76	1.00	1.00	1.00	0.82
		ΔT	32	30	26	22	32	30	26	22	32	30	26	23	31	30	26	22	31	29	26	22	32	31	27	23
		kW	2.62	2.62	2.61	2.63	2.94	2.93	2.93	2.95	3.29	3.29	3.29	3.31	3.68	3.68	3.67	3.70	4.11	4.11	4.10	4.13	4.62	4.61	4.61	4.63
		Amps	10.3	10.3	10.3	10.4	11.8	11.7	11.7	11.8	13.4	13.4	13.3	13.5	15.1	15.1	15.1	15.2	17.1	17.1	17.1	17.2	19.4	19.4	19.4	19.5
		HI PR	276	277	279	284	319	320	322	327	364	365	367	372	412	413	415	420	464	465	467	472	520	521	523	528
		LO PR	129	130	134	139	136	138	141	146	143	145	148	153	149	150	153	159	154	156	159	164	161	163	166	171
	1400	MBh	42.5	43.1	44.3	46.2	42.2	42.7	44.0	45.8	41.1	41.7	42.9	44.8	39.3	39.9	41.1	42.9	37.0	37.6	38.8	40.7	35.0	35.6	36.8	38.6
		S/T	1.00	1.00	0.86	0.71	1.00	1.00	0.87	0.72	1.00	1.00	0.89	0.75	1.00	1.00	0.91	0.77	1.00	1.00	1.00	0.79	1.00	1.00	1.00	0.84
		ΔT	31	29	26	22	31	29	25	22	31	29	26	22	31	29	25	22	31	29	25	21	32	30	26	23
		kW	2.63	2.62	2.62	2.64	2.95	2.94	2.94	2.96	3.30	3.30	3.29	3.32	3.69	3.69	3.68	3.70	4.12	4.12	4.11	4.14	4.62	4.62	4.62	4.64
		Amps	10.3	10.3	10.3	10.4	11.8	11.8	11.8	11.9	13.4	13.4	13.4	13.5	15.2	15.2	15.2	15.3	17.2	17.1	17.1	17.2	19.5	19.5	19.4	19.5
		HI PR	277	279	280	285	320	321	323	328	365	366	368	373	413	415	417	421	466	467	469	473	521	522	524	529
		LO PR	130	132	135	140	138	139	142	148	144	146	149	154	150	151	155	160	155	157	160	165	162	164	167	172
	1575	MBh	43.3	43.9	45.1	47.0	42.9	43.5	44.7	46.6	41.9	42.5	43.7	45.5	40.1	40.6	41.8	43.7	37.8	38.4	39.6	41.5	35.8	36.4	37.6	39.4
		S/T	1.00	1.00	0.88	0.74	1.00	1.00	0.89	0.74	1.00	1.00	0.92	0.77	1.00	1.00	0.94	0.79	1.00	1.00	1.00	0.81	1.00	1.00	1.00	0.86
		ΔT	30	28	25	21	30	28	24	21	30	28	25	21	30	28	24	21	30	28	24	21	31	29	25	22
		kW	2.64	2.64	2.63	2.66	2.96	2.96	2.95	2.98	3.32	3.31	3.31	3.33	3.70	3.70	3.69	3.72	4.13	4.13	4.12	4.15	4.64	4.64	4.63	4.65
		Amps	10.4	10.4	10.4	10.5	11.9	11.8	11.8	11.9	13.5	13.5	13.5	13.6	15.3	15.2	15.2	15.3	17.2	17.2	17.2	17.3	19.5	19.5	19.5	19.6
		HI PR	280	281	283	288	323	324	326	330	368	369	371	375	416	417	419	424	468	469	471	476	524	525	527	532
		LO PR	132	134	137	142	140	142	145	150	147	148	151	157	152	154	157	162	158	159	162	168	165	166	169	175

IDB: Entering Indoor Dry Bulb Temperature

Shaded area reflects AHRI (TVA) conditions.

kW = Total system power

High and low pressures are measured at the liquid and suction access fittings.

Amps: Unit amps (comp.+ evaporator + condenser fan motors)

			Outdoor Ambient Temperature																							
			65				75				85				95				105				115			
			Entering Indoor Wet Bulb Temperature																							
IDB	Airflow		59	63	67	71	59	63	67	71	59	63	67	71	59	63	67	71	59	63	67	71	59	63	67	71
70	1717	MBh	45.9	47.5	52.1	-	44.8	46.4	50.9	-	43.7	45.3	49.7	-	42.7	44.2	48.5	-	40.5	42.0	46.0	-	37.6	38.9	42.6	-
		S/T	0.80	0.67	0.46	-	0.83	0.69	0.48	-	0.85	0.71	0.49	-	0.88	0.73	0.51	-	0.91	0.76	0.53	-	0.92	0.77	0.53	-
		ΔT	20	17	13	-	20	17	13	-	20	17	13	-	20	17	13	-	20	17	13	-	18	16	12	-
		kW	3.18	3.25	3.35	-	3.42	3.49	3.60	-	3.63	3.70	3.82	-	3.81	3.89	4.01	-	3.96	4.05	4.18	-	4.10	4.19	4.32	-
		Amps	15.3	15.5	15.9	-	16.2	16.5	16.9	-	17.3	17.6	18.0	-	18.2	18.5	19.0	-	19.1	19.5	20.0	-	20.0	20.4	21.0	-
		HI PR	254	273	288	-	285	306	324	-	324	348	368	-	369	397	419	-	415	446	471	-	458	493	521	-
		LO PR	112	119	130	-	118	126	137	-	123	131	142	-	129	137	150	-	135	144	157	-	140	149	162	-
	1529	MBh	44.5	46.2	50.6	-	43.5	45.1	49.4	-	42.5	44.0	48.2	-	41.4	42.9	47.1	-	39.4	40.8	44.7	-	36.5	37.8	41.4	-
		S/T	0.76	0.64	0.44	-	0.79	0.66	0.46	-	0.81	0.68	0.47	-	0.83	0.70	0.48	-	0.87	0.72	0.50	-	0.87	0.73	0.51	-
		ΔT	20	18	13	-	21	18	14	-	21	18	14	-	21	18	14	-	21	18	13	-	19	17	13	-
		kW	3.16	3.22	3.32	-	3.39	3.46	3.57	-	3.60	3.67	3.79	-	3.78	3.86	3.98	-	3.93	4.02	4.15	-	4.07	4.15	4.29	-
		Amps	15.2	15.4	15.8	-	16.1	16.4	16.8	-	17.1	17.5	17.9	-	18.0	18.4	18.9	-	19.0	19.3	19.8	-	19.9	20.2	20.8	-
		HI PR	251	270	285	-	282	303	320	-	321	345	364	-	365	393	415	-	411	442	467	-	454	488	516	-
		LO PR	111	118	128	-	117	124	136	-	121	129	141	-	128	136	148	-	134	142	155	-	138	147	161	-
	1341	MBh	41.1	42.6	46.7	-	40.2	41.6	45.6	-	39.2	40.6	44.5	-	38.2	39.6	43.4	-	36.3	37.7	41.3	-	33.7	34.9	38.2	-
		S/T	0.73	0.61	0.42	-	0.76	0.64	0.44	-	0.78	0.65	0.45	-	0.80	0.67	0.47	-	0.84	0.70	0.48	-	0.84	0.70	0.49	-
		ΔT	21	18	14	-	21	18	14	-	21	18	14	-	21	18	14	-	21	18	14	-	19	17	13	-
		kW	3.09	3.15	3.25	-	3.31	3.38	3.49	-	3.51	3.59	3.70	-	3.69	3.77	3.89	-	3.84	3.92	4.04	-	3.97	4.05	4.18	-
		Amps	14.9	15.1	15.5	-	15.7	16.0	16.4	-	16.8	17.1	17.5	-	17.7	18.0	18.5	-	18.5	18.9	19.4	-	19.4	19.8	20.3	-
		HI PR	244	262	277	-	273	294	311	-	311	335	353	-	354	381	402	-	398	429	453	-	440	474	500	-
		LO PR	107	114	125	-	113	121	132	-	118	125	137	-	124	132	144	-	130	138	151	-	134	143	156	-
75	1717	MBh	46.7	48.0	52.0	55.8	45.6	46.9	50.8	54.5	44.5	45.8	49.6	53.2	43.4	44.7	48.4	51.9	41.2	42.4	45.9	49.3	38.2	39.3	42.6	45.7
		S/T	0.91	0.81	0.61	0.40	0.94	0.84	0.64	0.41	0.96	0.86	0.65	0.42	0.99	0.89	0.67	0.43	1.00	0.92	0.70	0.45	1.00	0.93	0.70	0.45
		ΔT	23	21	17	12	23	21	17	12	23	21	17	12	23	21	17	12	22	21	17	12	20	20	16	11
		kW	3.21	3.27	3.37	3.48	3.45	3.52	3.63	3.74	3.66	3.73	3.85	3.97	3.84	3.92	4.05	4.18	4.00	4.08	4.21	4.35	4.13	4.22	4.36	4.50
		Amps	15.4	15.6	16.0	16.5	16.3	16.6	17.0	17.5	17.4	17.7	18.2	18.7	18.3	18.7	19.2	19.7	19.2	19.6	20.1	20.8	20.2	20.6	21.1	21.8
		HI PR	256	276	291	304	288	310	327	341	327	352	372	388	373	401	423	442	419	451	476	497	463	498	526	549
		LO PR	113	120	131	140	119	127	138	147	124	132	144	153	130	138	151	161	136	145	158	169	141	150	164	175
	1529	MBh	45.3	46.6	50.5	54.2	44.2	45.6	49.3	52.9	43.2	44.5	48.1	51.7	42.1	**43.4**	47.0	50.4	40.0	41.2	44.6	47.9	37.1	38.2	41.3	44.3
		S/T	0.87	0.77	0.59	0.38	0.90	0.80	0.61	0.39	0.92	0.82	0.62	0.40	0.95	**0.85**	0.64	0.41	0.98	0.88	0.67	0.43	0.99	0.89	0.67	0.43
		ΔT	24	22	18	12	24	22	18	12	24	22	18	12	24	**22**	18	13	24	22	18	12	22	20	17	12
		kW	3.19	3.25	3.35	3.45	3.42	3.49	3.60	3.71	3.63	3.70	3.82	3.94	3.81	**3.89**	4.01	4.14	3.97	4.05	4.18	4.32	4.10	4.19	4.32	4.47
		Amps	15.3	15.5	15.9	16.4	16.2	16.5	16.9	17.4	17.3	17.6	18.0	18.6	18.2	**18.5**	19.0	19.6	19.1	19.5	20.0	20.6	20.0	20.4	21.0	21.6
		HI PR	254	273	288	301	285	306	324	338	324	349	368	384	369	**397**	419	437	415	447	472	492	459	493	521	543
		LO PR	112	119	130	138	118	126	137	146	123	131	143	152	129	**137**	150	159	135	144	157	167	140	149	162	173
	1341	MBh	41.8	43.0	46.6	50.0	40.8	42.0	45.5	48.8	39.9	41.0	44.4	47.7	38.9	40.0	43.3	46.5	36.9	38.0	41.2	44.2	34.2	35.2	38.1	40.9
		S/T	0.83	0.75	0.56	0.36	0.86	0.77	0.59	0.38	0.89	0.79	0.60	0.39	0.91	0.82	0.62	0.40	0.95	0.85	0.64	0.41	0.96	0.86	0.65	0.42
		ΔT	24	22	18	12	24	22	18	13	24	22	18	13	24	22	18	13	24	22	18	13	22	21	17	12
		kW	3.11	3.18	3.27	3.37	3.34	3.41	3.51	3.62	3.54	3.62	3.73	3.85	3.72	3.80	3.92	4.04	3.87	3.95	4.08	4.21	4.00	4.09	4.22	4.35
		Amps	15.0	15.2	15.6	16.0	15.9	16.1	16.5	17.0	16.9	17.2	17.6	18.2	17.8	18.1	18.6	19.2	18.7	19.0	19.5	20.1	19.6	19.9	20.5	21.1
		HI PR	246	265	280	292	276	297	314	327	314	338	357	372	358	385	407	424	403	433	457	477	445	479	505	527
		LO PR	108	115	126	134	115	122	133	142	119	127	138	147	125	133	145	155	131	139	152	162	136	144	157	168

IDB: Entering Indoor Dry Bulb Temperature

Shaded area reflects ACCA (TVA) conditions.

kW = Total system power

High and low pressures are measured at the liquid and suction access fittings.

Amps: Unit amps (comp.+ evaporator + condenser fan motors)

			Outdoor Ambient Temperature																							
			65				75				85				95				105				115			
			Entering Indoor Wet Bulb Temperature																							
IDB	Airflow		59	63	67	71	59	63	67	71	59	63	67	71	59	63	67	71	59	63	67	71	59	63	67	71
80	1717	MBh	47.5	48.5	51.8	55.4	46.4	47.4	50.6	54.1	45.3	46.3	49.4	52.8	44.2	45.1	48.2	51.5	42.0	42.9	45.8	49.0	38.9	39.7	42.4	45.4
		S/T	1.00	0.93	0.76	0.57	1.00	0.97	0.79	0.59	1.00	1.00	0.81	0.60	1.00	1.00	0.83	0.62	1.00	1.00	0.86	0.65	1.00	1.00	0.87	0.65
		ΔT	25	24	21	17	25	25	21	17	24	25	21	17	24	24	22	17	22	23	21	17	21	21	20	16
		kW	3.23	3.30	3.40	3.51	3.47	3.55	3.66	3.77	3.68	3.76	3.88	4.01	3.87	3.95	4.08	4.21	4.03	4.12	4.25	4.39	4.17	4.26	4.40	4.54
		Amps	15.5	15.8	16.1	16.6	16.4	16.7	17.1	17.6	17.5	17.8	18.3	18.8	18.4	18.8	19.3	19.9	19.4	19.8	20.3	20.9	20.3	20.7	21.3	21.9
		HI PR	259	279	294	307	291	313	330	344	330	356	375	392	376	405	428	446	423	456	481	502	468	503	532	554
		LO PR	114	121	132	141	120	128	140	149	125	133	145	155	131	140	153	163	138	147	160	170	143	152	166	176
	1529	MBh	46.1	47.1	50.3	53.8	45.0	46.0	49.2	52.5	44.0	44.9	48.0	51.3	42.9	43.8	**46.8**	50.0	40.7	41.6	44.5	47.5	37.7	38.6	41.2	44.0
		S/T	0.95	0.89	0.72	0.54	0.98	0.92	0.75	0.56	1.00	0.95	0.77	0.58	1.00	0.98	**0.79**	0.59	1.00	1.00	0.82	0.62	1.00	1.00	0.83	0.62
		ΔT	26	25	22	18	27	26	22	18	26	26	22	18	26	26	**22**	18	24	25	22	18	23	23	21	16
		kW	3.21	3.28	3.37	3.48	3.45	3.52	3.63	3.74	3.66	3.73	3.85	3.97	3.84	3.92	**4.05**	4.18	4.00	4.08	4.21	4.35	4.13	4.22	4.36	4.50
		Amps	15.4	15.6	16.0	16.5	16.3	16.6	17.0	17.5	17.4	17.7	18.2	18.7	18.3	18.7	**19.2**	19.7	19.2	19.6	20.1	20.8	20.2	20.6	21.1	21.8
		HI PR	256	276	291	304	288	310	327	341	327	352	372	388	373	401	**423**	442	419	451	476	497	463	498	526	549
		LO PR	113	120	131	140	119	127	138	148	124	132	144	153	130	138	**151**	161	136	145	158	169	141	150	164	175
	1341	MBh	42.6	43.5	46.5	49.7	41.6	42.5	45.4	48.5	40.6	41.5	44.3	47.3	39.6	40.4	43.2	46.2	37.6	38.4	41.1	43.9	34.8	35.6	38.0	40.6
		S/T	0.91	0.86	0.70	0.52	0.95	0.89	0.72	0.54	0.97	0.91	0.74	0.55	1.00	0.94	0.77	0.57	1.04	0.98	0.80	0.59	1.05	0.98	0.80	0.60
		ΔT	27	26	22	18	27	26	23	18	27	26	23	18	27	26	23	18	27	26	22	18	25	24	21	17
		kW	3.14	3.20	3.30	3.40	3.37	3.44	3.54	3.65	3.57	3.64	3.76	3.88	3.75	3.83	3.95	4.08	3.90	3.98	4.11	4.25	4.03	4.12	4.25	4.39
		Amps	15.1	15.3	15.7	16.1	16.0	16.3	16.7	17.1	17.0	17.3	17.8	18.3	17.9	18.3	18.7	19.3	18.8	19.2	19.7	20.3	19.7	20.1	20.6	21.3
		HI PR	249	268	283	295	279	300	317	331	317	341	361	376	361	389	411	428	407	438	462	482	449	483	510	532
		LO PR	109	116	127	135	116	123	134	143	120	128	140	149	126	134	147	156	132	141	154	164	137	146	159	169
85	1717	MBh	48.3	49.2	51.6	55.0	47.2	48.1	50.4	53.7	46.1	47.0	49.2	52.5	44.9	45.8	48.0	51.2	42.7	43.5	45.6	48.6	39.5	40.3	42.2	45.0
		S/T	1.00	1.00	0.91	0.74	1.00	1.00	0.94	0.76	1.00	1.00	0.97	0.78	1.00	1.00	1.00	0.81	1.00	1.00	1.00	0.84	1.00	1.00	1.00	0.85
		ΔT	26	26	25	22	25	26	25	22	25	25	25	22	24	25	26	22	23	23	24	22	21	22	23	20
		kW	3.26	3.33	3.43	3.53	3.50	3.57	3.68	3.80	3.71	3.79	3.91	4.04	3.90	3.99	4.11	4.25	4.06	4.15	4.28	4.43	4.20	4.29	4.43	4.58
		Amps	15.6	15.9	16.3	16.7	16.5	16.8	17.3	17.8	17.6	18.0	18.4	19.0	18.6	18.9	19.4	20.0	19.5	19.9	20.4	21.1	20.5	20.9	21.4	22.1
		HI PR	261	281	297	310	293	316	333	348	334	359	379	396	380	409	432	450	428	460	486	507	472	508	537	560
		LO PR	115	122	134	142	122	129	141	150	126	135	147	156	133	141	154	164	139	148	162	172	144	153	167	178
	1529	MBh	46.9	47.8	50.1	53.4	45.8	46.7	48.9	52.2	44.7	45.6	47.7	50.9	43.6	44.5	46.6	49.7	41.5	42.3	44.3	47.2	38.4	39.1	41.0	43.7
		S/T	0.99	0.96	0.87	0.70	1.00	0.99	0.90	0.73	1.00	1.00	0.92	0.75	1.00	1.00	0.95	0.77	1.00	1.00	0.99	0.80	1.00	1.00	0.99	0.81
		ΔT	28	28	26	23	28	28	26	23	27	27	26	23	26	27	27	23	25	25	26	23	23	24	25	21
		kW	3.23	3.30	3.40	3.51	3.47	3.55	3.66	3.77	3.68	3.76	3.88	4.01	3.87	3.95	4.08	4.21	4.03	4.12	4.25	4.39	4.17	4.26	4.40	4.54
		Amps	15.5	15.8	16.1	16.6	16.4	16.7	17.1	17.6	17.5	17.8	18.3	18.8	18.4	18.8	19.3	19.9	19.4	19.8	20.3	20.9	20.3	20.7	21.3	21.9
		HI PR	259	279	294	307	291	313	330	344	330	356	375	392	376	405	428	446	423	456	481	502	468	503	532	554
		LO PR	114	121	132	141	120	128	140	149	125	133	145	155	131	140	153	163	138	147	160	170	143	152	166	176
	1341	MBh	43.3	44.1	46.2	49.3	42.3	43.1	45.1	48.2	41.3	42.1	44.1	47.0	40.3	41.1	43.0	45.9	38.3	39.0	40.8	43.6	35.4	36.1	37.8	40.4
		S/T	0.96	0.93	0.84	0.68	0.99	0.96	0.87	0.70	1.00	0.98	0.89	0.72	1.00	1.00	0.92	0.74	1.00	1.00	0.95	0.77	1.00	1.00	0.96	0.78
		ΔT	28	28	26	23	29	28	27	23	28	28	27	23	28	28	27	23	26	27	27	23	24	25	25	22
		kW	3.16	3.22	3.32	3.42	3.39	3.46	3.57	3.68	3.60	3.67	3.79	3.91	3.78	3.86	3.98	4.11	3.93	4.02	4.14	4.28	4.06	4.15	4.29	4.43
		Amps	15.2	15.4	15.8	16.3	16.1	16.4	16.8	17.3	17.1	17.4	17.9	18.4	18.0	18.4	18.9	19.4	18.9	19.3	19.8	20.4	19.8	20.2	20.8	21.4
		HI PR	251	270	285	298	282	303	320	334	320	345	364	380	365	393	415	433	411	442	467	487	454	488	516	538
		LO PR	111	118	128	137	117	124	136	145	121	129	141	150	128	136	148	158	134	142	155	165	138	147	161	171

IDB: Entering Indoor Dry Bulb Temperature

Shaded area reflects AHRI (TVA) conditions.

kW = Total system power

High and low pressures are measured at the liquid and suction access fittings.

Amps: Unit amps (comp.+ evaporator + condenser fan motors)

			Outdoor Ambient Temperature																							
			65				75				85				95				105				115			
			Entering Indoor Wet Bulb Temperature																							
IDB	Airflow		59	63	67	71	59	63	67	71	59	63	67	71	59	63	67	71	59	63	67	71	59	63	67	71
70	1400	MBh	47.5	48.2	49.6	-	47.1	47.8	49.2	-	45.9	46.5	47.9	-	43.7	44.4	45.8	-	41.1	41.8	43.2	-	38.8	39.4	40.8	-
		S/T	0.66	0.58	0.44	-	0.66	0.58	0.44	-	0.69	0.61	0.47	-	1.00	0.63	0.49	-	1.00	0.65	0.51	-	1.00	0.71	0.56	-
		ΔT	20	18	14	-	20	18	14	-	20	18	15	-	20	18	14	-	20	18	14	-	21	19	15	-
		kW	3.05	3.04	3.04	-	3.41	3.41	3.40	-	3.82	3.81	3.81	-	4.26	4.25	4.25	-	4.75	4.75	4.74	-	5.33	5.32	5.32	-
		Amps	11.7	11.7	11.6	-	13.3	13.3	13.3	-	15.2	15.2	15.2	-	17.2	17.2	17.2	-	19.5	19.4	19.4	-	22.1	22.1	22.1	-
		Hi PR	267	268	270	-	309	310	312	-	353	354	356	-	400	402	403	-	452	453	455	-	506	507	509	-
		Lo PR	125	127	130	-	133	134	137	-	139	141	144	-	145	147	150	-	150	152	155	-	157	159	162	-
	1525	MBh	47.9	48.6	50.0	-	47.5	48.2	49.6	-	46.3	46.9	48.4	-	44.1	44.8	46.2	-	41.5	42.2	43.6	-	39.2	39.8	41.3	-
		S/T	0.69	0.61	0.47	-	0.70	0.62	0.48	-	0.73	0.65	0.51	-	1.00	0.67	0.53	-	1.00	0.69	0.55	-	1.00	0.74	0.60	-
		ΔT	19	17	14	-	19	17	14	-	19	17	14	-	19	17	14	-	19	17	13	-	20	18	15	-
		kW	3.06	3.06	3.05	-	3.42	3.42	3.41	-	3.83	3.83	3.82	-	4.27	4.27	4.26	-	4.76	4.76	4.75	-	5.34	5.34	5.33	-
		Amps	11.7	11.7	11.7	-	13.4	13.4	13.3	-	15.3	15.2	15.2	-	17.3	17.3	17.2	-	19.5	19.5	19.5	-	22.2	22.1	22.1	-
		Hi PR	268	270	272	-	310	312	314	-	355	356	358	-	402	403	405	-	453	454	456	-	508	509	511	-
		Lo PR	126	128	131	-	134	135	139	-	141	142	145	-	146	148	151	-	152	153	156	-	159	160	163	-
	1800	MBh	49.1	49.7	51.1	-	48.6	49.3	50.7	-	47.4	48.1	49.5	-	45.3	45.9	47.4	-	42.7	43.3	44.8	-	40.3	41.0	42.4	-
		S/T	0.74	0.66	0.52	-	0.74	0.66	0.52	-	1.00	0.69	0.55	-	1.00	0.71	0.57	-	1.00	0.73	0.59	-	1.00	0.79	0.65	-
		ΔT	18	16	12	-	18	16	12	-	18	16	13	-	18	16	12	-	17	16	12	-	19	17	13	-
		kW	3.08	3.08	3.07	-	3.44	3.44	3.44	-	3.85	3.85	3.84	-	4.29	4.29	4.28	-	4.78	4.78	4.77	-	5.36	5.36	5.35	-
		Amps	11.8	11.8	11.8	-	13.5	13.5	13.4	-	15.4	15.3	15.3	-	17.4	17.4	17.3	-	19.6	19.6	19.6	-	22.3	22.2	22.2	-
		Hi PR	272	273	275	-	314	315	317	-	358	359	361	-	405	406	408	-	456	457	459	-	511	512	514	-
		Lo PR	129	131	134	-	137	139	142	-	144	145	148	-	149	151	154	-	155	156	159	-	162	163	166	-
75	1400	MBh	47.5	48.2	49.6	51.8	47.1	47.8	49.2	51.4	45.9	46.5	48.0	50.1	43.8	44.4	45.8	48.0	41.2	41.8	43.2	45.4	38.8	39.5	40.9	43.0
		S/T	0.79	0.71	0.57	0.42	0.80	0.72	0.58	0.43	1.00	0.74	0.60	0.45	1.00	0.76	0.62	0.47	1.00	0.79	0.65	0.50	1.00	1.00	0.70	0.55
		ΔT	24	22	19	15	24	22	19	15	24	22	19	15	24	22	19	15	24	22	18	15	25	23	19	16
		kW	3.04	3.04	3.03	3.06	3.41	3.41	3.40	3.43	3.82	3.81	3.81	3.83	4.26	4.25	4.25	4.27	4.75	4.74	4.74	4.77	5.32	5.32	5.32	5.34
		Amps	11.7	11.6	11.6	11.7	13.3	13.3	13.3	13.4	15.2	15.2	15.1	15.3	17.2	17.2	17.2	17.3	19.4	19.4	19.4	19.5	22.1	22.1	22.0	22.2
		Hi PR	267	268	270	275	309	310	312	317	353	354	356	361	401	402	404	408	452	453	455	459	506	507	509	514
		Lo PR	125	127	130	135	133	134	137	143	139	141	144	149	145	147	150	155	151	152	155	161	157	159	162	167
	1525	MBh	48.0	48.6	50.0	52.2	47.5	48.2	49.6	51.8	46.3	47.0	48.4	50.5	44.2	**44.8**	46.3	48.4	41.6	42.2	43.7	45.8	39.2	39.9	41.3	43.4
		S/T	0.83	0.75	0.61	0.46	1.00	0.75	0.61	0.46	1.00	0.78	0.64	0.49	1.00	**0.80**	0.66	0.51	1.00	0.82	0.68	0.53	1.00	1.00	0.74	0.59
		ΔT	23	21	18	14	23	21	18	14	23	22	18	14	23	**21**	18	14	23	21	18	14	24	22	19	15
		kW	3.06	3.05	3.05	3.07	3.42	3.42	3.41	3.44	3.83	3.82	3.82	3.85	4.27	**4.26**	4.26	4.29	4.76	4.76	4.75	4.78	5.34	5.33	5.33	5.35
		Amps	11.7	11.7	11.7	11.8	13.4	13.4	13.3	13.5	15.2	15.2	15.2	15.3	17.3	**17.2**	17.2	17.3	19.5	19.5	19.5	19.6	22.1	22.1	22.1	22.2
		Hi PR	269	270	272	276	311	312	314	318	355	356	358	362	402	**403**	405	410	453	454	456	461	508	509	511	515
		Lo PR	126	128	131	136	134	136	139	144	141	142	145	151	146	**148**	151	156	152	153	156	162	159	160	163	169
	1800	MBh	49.1	49.7	51.2	53.3	48.7	49.3	50.7	52.9	47.4	48.1	49.5	51.7	45.3	46.0	47.4	49.5	42.7	43.4	44.8	46.9	40.3	41.0	42.4	44.6
		S/T	0.87	0.79	0.65	0.50	1.00	0.80	0.66	0.51	1.00	0.82	0.68	0.53	1.00	0.84	0.70	0.55	1.00	1.00	0.73	0.58	1.00	1.00	0.78	0.63
		ΔT	22	20	17	13	22	20	16	13	22	20	17	13	22	20	16	13	22	20	16	13	23	21	17	14
		kW	3.08	3.08	3.07	3.10	3.44	3.44	3.43	3.46	3.85	3.85	3.84	3.87	4.29	4.29	4.28	4.31	4.78	4.78	4.77	4.80	5.36	5.36	5.35	5.38
		Amps	11.8	11.8	11.8	11.9	13.5	13.5	13.4	13.6	15.3	15.3	15.3	15.4	17.4	17.3	17.3	17.4	19.6	19.6	19.6	19.7	22.2	22.2	22.2	22.3
		Hi PR	272	273	275	280	314	315	317	322	358	359	361	366	405	406	408	413	456	458	459	464	511	512	514	519
		Lo PR	129	131	134	139	137	139	142	147	144	145	148	154	149	151	154	159	155	156	159	165	162	163	166	172

IDB: Entering Indoor Dry Bulb Temperature

Shaded area reflects ACCA (TVA) conditions.

kW = Total system power

High and low pressures are measured at the liquid and suction access fittings.

Amps: Unit amps (comp.+ evaporator + condenser fan motors)

Expanded Cooling Data — DP14GM48***41C* (cont.)

			Outdoor Ambient Temperature																							
			65				75				85				95				105				115			
			Entering Indoor Wet Bulb Temperature																							
IDB	Airflow		59	63	67	71	59	63	67	71	59	63	67	71	59	63	67	71	59	63	67	71	59	63	67	71
80	1400	MBh	47.8	48.5	49.9	52.0	47.4	48.0	49.4	51.6	46.1	46.8	48.2	50.4	44.0	44.7	46.1	48.2	41.4	42.1	43.5	45.6	39.0	39.7	41.1	43.3
		S/T	1.00	0.84	0.70	0.55	1.00	0.85	0.71	0.56	1.00	0.87	0.73	0.58	1.00	1.00	0.75	0.60	1.00	1.00	0.78	0.63	1.00	1.00	0.83	0.68
		ΔT	28	26	23	19	28	26	23	19	28	26	23	19	28	26	23	19	28	26	22	19	29	27	24	20
		kW	3.05	3.04	3.04	3.06	3.41	3.41	3.40	3.43	3.82	3.81	3.81	3.84	4.26	4.25	4.25	4.28	4.75	4.75	4.74	4.77	5.33	5.32	5.32	5.34
		Amps	11.7	11.7	11.6	11.8	13.3	13.3	13.3	13.4	15.2	15.2	15.2	15.3	17.2	17.2	17.2	17.3	19.5	19.4	19.4	19.5	22.1	22.1	22.1	22.2
		Hi PR	268	269	271	275	310	311	313	317	354	355	357	361	401	402	404	409	452	453	455	460	507	508	510	514
		Lo PR	126	127	130	136	133	135	138	143	140	141	145	150	146	147	150	156	151	153	156	161	158	160	163	168
	1525	MBh	48.2	48.9	50.3	52.4	47.8	48.4	49.9	52.0	46.5	47.2	48.6	50.8	44.4	45.1	**46.5**	48.7	41.8	42.5	43.9	46.1	39.4	40.1	41.5	43.7
		S/T	1.00	0.88	0.74	0.59	1.00	0.89	0.74	0.60	1.00	0.91	0.77	0.62	1.00	1.00	**0.79**	0.64	1.00	1.00	0.81	0.66	1.00	1.00	0.87	0.72
		ΔT	27	25	22	18	27	25	22	18	28	26	22	19	27	25	**22**	18	27	25	22	18	28	26	23	19
		kW	3.06	3.06	3.05	3.08	3.42	3.42	3.41	3.44	3.83	3.83	3.82	3.85	4.27	4.27	**4.26**	4.29	4.76	4.76	4.75	4.78	5.34	5.34	5.33	5.36
		Amps	11.7	11.7	11.7	11.8	13.4	13.4	13.3	13.5	15.2	15.2	15.2	15.3	17.3	17.2	**17.2**	17.3	19.5	19.5	19.5	19.6	22.2	22.1	22.1	22.2
		Hi PR	269	270	272	277	311	312	314	319	355	356	358	363	403	404	**406**	410	454	455	457	461	508	509	511	516
		Lo PR	127	128	132	137	135	136	139	145	141	143	146	151	147	148	**151**	157	152	154	157	162	159	161	164	169
	1800	MBh	49.3	50.0	51.4	53.6	48.9	49.6	51.0	53.1	47.7	48.3	49.7	51.9	45.5	46.2	47.6	49.8	42.9	43.6	45.0	47.2	40.6	41.2	42.7	44.8
		S/T	1.00	0.92	0.78	0.63	1.00	0.93	0.79	0.64	1.00	1.00	0.81	0.66	1.00	1.00	0.83	0.68	1.00	1.00	0.86	0.71	1.00	1.00	0.91	0.76
		ΔT	26	24	21	17	26	24	21	17	26	24	21	17	26	24	21	17	26	24	20	17	27	25	22	18
		kW	3.08	3.08	3.07	3.10	3.44	3.44	3.44	3.46	3.85	3.85	3.84	3.87	4.29	4.29	4.28	4.31	4.78	4.78	4.77	4.80	5.36	5.36	5.35	5.38
		Amps	11.8	11.8	11.8	11.9	13.5	13.5	13.4	13.6	15.3	15.3	15.3	15.4	17.4	17.4	17.3	17.5	19.6	19.6	19.6	19.7	22.3	22.2	22.2	22.3
		Hi PR	272	274	275	280	314	316	317	322	358	360	361	366	406	407	409	413	457	458	460	465	511	513	514	519
		Lo PR	130	132	135	140	138	139	142	148	144	146	149	154	150	151	155	160	155	157	160	165	162	164	167	172
85	1400	MBh	48.6	49.2	50.7	52.8	48.2	48.8	50.2	52.4	46.9	47.6	49.0	51.2	44.8	45.5	46.9	49.0	42.2	42.9	44.3	46.4	39.8	40.5	41.9	44.1
		S/T	1.00	0.95	0.81	0.66	1.00	1.00	0.81	0.66	1.00	1.00	0.84	0.69	1.00	1.00	0.86	0.71	1.00	1.00	0.88	0.73	1.00	1.00	1.00	0.79
		ΔT	32	30	26	23	32	30	26	23	32	30	27	23	32	30	26	23	31	30	26	22	33	31	27	24
		kW	3.05	3.05	3.04	3.07	3.42	3.41	3.41	3.44	3.82	3.82	3.82	3.84	4.26	4.26	4.26	4.28	4.76	4.75	4.75	4.77	5.33	5.33	5.32	5.35
		Amps	11.7	11.7	11.7	11.8	13.4	13.4	13.3	13.4	15.2	15.2	15.2	15.3	17.2	17.2	17.2	17.3	19.5	19.5	19.4	19.6	22.1	22.1	22.1	22.2
		Hi PR	269	270	272	277	311	312	314	319	355	356	358	363	402	404	405	410	453	455	457	461	508	509	511	516
		Lo PR	128	129	132	138	135	137	140	145	142	143	147	152	147	149	152	157	153	154	158	163	160	161	165	170
	1525	MBh	49.0	49.7	51.1	53.2	48.6	49.2	50.7	52.8	47.3	48.0	49.4	51.6	45.2	45.9	47.3	49.5	42.6	43.3	44.7	46.9	40.2	40.9	42.3	44.5
		S/T	1.00	0.98	0.84	0.69	1.00	1.00	0.85	0.70	1.00	1.00	0.88	0.73	1.00	1.00	0.90	0.75	1.00	1.00	1.00	0.77	1.00	1.00	1.00	0.82
		ΔT	31	29	26	22	31	29	26	22	31	29	26	22	31	29	26	22	31	29	25	22	32	30	27	23
		kW	3.06	3.06	3.06	3.08	3.43	3.43	3.42	3.45	3.84	3.83	3.83	3.85	4.28	4.27	4.27	4.29	4.77	4.77	4.76	4.79	5.35	5.34	5.34	5.36
		Amps	11.8	11.7	11.7	11.8	13.4	13.4	13.4	13.5	15.3	15.3	15.2	15.4	17.3	17.3	17.3	17.4	19.5	19.5	19.5	19.6	22.2	22.2	22.1	22.3
		Hi PR	270	272	273	278	312	314	315	320	356	358	360	364	404	405	407	412	455	456	458	463	509	511	513	517
		Lo PR	129	130	134	139	136	138	141	146	143	145	148	153	149	150	153	159	154	156	159	164	161	163	166	171
	1800	MBh	50.1	50.8	52.2	54.4	49.7	50.4	51.8	53.9	48.5	49.1	50.5	52.7	46.3	47.0	48.4	50.6	43.7	44.4	45.8	48.0	41.4	42.0	43.5	45.6
		S/T	1.00	1.00	0.89	0.74	1.00	1.00	0.89	0.74	1.00	1.00	0.92	0.77	1.00	1.00	0.94	0.79	1.00	1.00	1.00	0.81	1.00	1.00	1.00	0.87
		ΔT	30	28	24	21	30	28	24	21	30	28	25	21	30	28	24	21	29	28	24	20	31	29	25	22
		kW	3.09	3.08	3.08	3.11	3.45	3.45	3.44	3.47	3.86	3.86	3.85	3.88	4.30	4.30	4.29	4.32	4.79	4.79	4.78	4.81	5.37	5.36	5.36	5.39
		Amps	11.9	11.8	11.8	11.9	13.5	13.5	13.5	13.6	15.4	15.4	15.3	15.5	17.4	17.4	17.4	17.5	19.6	19.6	19.6	19.7	22.3	22.3	22.2	22.4
		Hi PR	274	275	277	281	316	317	319	323	360	361	363	367	407	408	410	415	458	459	461	466	513	514	516	520
		Lo PR	132	133	137	142	139	141	144	149	146	148	151	156	152	153	156	162	157	159	162	167	164	166	169	174

IDB: Entering Indoor Dry Bulb Temperature

Shaded area reflects AHRI (TVA) conditions.

kW = Total system power

High and low pressures are measured at the liquid and suction access fittings.

Amps: Unit amps (comp.+ evaporator + condenser fan motors)

Expanded Cooling Data — DP14GM61***41A* — Low Stage

			Outdoor Ambient Temperature																							
			65				75				85				95				105				115			
			Entering Indoor Wet Bulb Temperature																							
IDB	Airflow		59	63	67	71	59	63	67	71	59	63	67	71	59	63	67	71	59	63	67	71	59	63	67	71
70	1463	MBh	40.2	41.6	45.6	-	39.2	40.7	44.6	-	38.3	39.7	43.5	-	37.4	38.7	42.4	-	35.5	36.8	40.3	-	32.9	34.1	37.3	-
		S/T	0.77	0.65	0.45	-	0.80	0.67	0.46	-	0.82	0.69	0.48	-	0.85	0.71	0.49	-	0.88	0.74	0.51	-	0.89	0.74	0.51	-
		ΔT	20	17	13	-	20	17	13	-	20	17	13	-	20	17	13	-	20	17	13	-	18	16	12	-
		kW	2.88	2.94	3.03	-	3.09	3.16	3.25	-	3.28	3.35	3.45	-	3.44	3.52	3.63	-	3.59	3.66	3.78	-	3.71	3.79	3.91	-
		Amps	13.6	13.9	14.2	-	14.5	14.7	15.1	-	15.4	15.7	16.2	-	16.3	16.6	17.1	-	17.1	17.5	18.0	-	18.0	18.3	18.8	-
		Hi PR	231	248	262	-	259	279	294	-	294	317	335	-	335	361	381	-	377	406	429	-	417	449	474	-
		Lo PR	111	118	129	-	117	125	136	-	122	129	141	-	128	136	148	-	134	143	156	-	139	147	161	-
	1300	MBh	39.0	40.4	44.3	-	38.1	39.5	43.3	-	37.2	38.5	42.2	-	36.3	37.6	41.2	-	34.5	35.7	39.1	-	31.9	33.1	36.3	-
		S/T	0.74	0.62	0.43	-	0.76	0.64	0.44	-	0.78	0.65	0.45	-	0.81	0.68	0.47	-	0.84	0.70	0.49	-	0.85	0.71	0.49	-
		ΔT	20	18	13	-	21	18	14	-	21	18	14	-	21	18	14	-	20	18	13	-	19	17	13	-
		kW	2.86	2.92	3.00	-	3.07	3.13	3.23	-	3.25	3.32	3.43	-	3.42	3.49	3.60	-	3.56	3.63	3.75	-	3.68	3.76	3.88	-
		Amps	13.5	13.8	14.1	-	14.4	14.6	15.0	-	15.3	15.6	16.0	-	16.2	16.5	16.9	-	17.0	17.3	17.8	-	17.8	18.2	18.7	-
		Hi PR	228	246	260	-	256	276	291	-	292	314	331	-	332	357	377	-	374	402	424	-	413	444	469	-
		Lo PR	110	117	127	-	116	123	135	-	120	128	140	-	127	135	147	-	133	141	154	-	137	146	159	-
	1138	MBh	36.0	37.3	40.9	-	35.2	36.4	39.9	-	34.3	35.6	39.0	-	33.5	34.7	38.0	-	31.8	33.0	36.1	-	29.5	30.5	33.5	-
		S/T	0.71	0.59	0.41	-	0.74	0.62	0.43	-	0.76	0.63	0.44	-	0.78	0.65	0.45	-	0.81	0.68	0.47	-	0.82	0.68	0.47	-
		ΔT	21	18	14	-	21	18	14	-	21	18	14	-	21	18	14	-	21	18	14	-	19	17	13	-
		kW	2.79	2.85	2.93	-	3.00	3.06	3.15	-	3.18	3.24	3.34	-	3.34	3.41	3.51	-	3.47	3.55	3.66	-	3.59	3.67	3.78	-
		Amps	13.2	13.5	13.8	-	14.1	14.3	14.7	-	15.0	15.3	15.7	-	15.8	16.1	16.5	-	16.6	17.0	17.4	-	17.4	17.8	18.3	-
		Hi PR	222	238	252	-	249	268	283	-	283	304	321	-	322	347	366	-	362	390	412	-	400	431	455	-
		Lo PR	106	113	124	-	112	120	131	-	117	124	136	-	123	131	143	-	129	137	149	-	133	142	155	-
75	1463	MBh	40.9	42.1	45.5	48.9	39.9	41.1	44.5	47.7	39.0	40.1	43.4	46.6	38.0	39.1	42.4	45.5	36.1	37.2	40.2	43.2	33.4	34.4	37.3	40.0
		S/T	0.88	0.79	0.60	0.38	0.91	0.81	0.62	0.40	0.93	0.84	0.63	0.41	0.96	0.86	0.65	0.42	1.00	0.90	0.68	0.44	1.00	0.90	0.68	0.44
		ΔT	23	21	17	12	23	21	17	12	23	21	17	12	23	21	17	12	23	21	17	12	21	20	16	11
		kW	2.90	2.96	3.05	3.15	3.12	3.18	3.28	3.38	3.31	3.38	3.48	3.59	3.47	3.55	3.66	3.78	3.62	3.69	3.81	3.94	3.74	3.82	3.94	4.07
		Amps	13.7	14.0	14.3	14.7	14.6	14.8	15.2	15.7	15.6	15.9	16.3	16.8	16.4	16.7	17.2	17.7	17.3	17.6	18.1	18.7	18.1	18.5	19.0	19.6
		Hi PR	233	251	265	276	262	281	297	310	297	320	338	353	339	365	385	402	381	410	433	452	421	453	479	499
		Lo PR	112	119	130	138	118	126	137	146	123	131	143	152	129	137	150	160	135	144	157	167	140	149	163	173
	1300	MBh	39.7	40.8	44.2	47.4	38.7	39.9	43.2	46.3	37.8	38.9	42.2	45.2	36.9	**38.0**	41.1	44.1	35.1	36.1	39.1	41.9	32.5	33.4	36.2	38.8
		S/T	0.84	0.75	0.57	0.37	0.87	0.78	0.59	0.38	0.89	0.80	0.60	0.39	0.92	**0.82**	0.62	0.40	0.95	0.85	0.65	0.42	0.96	0.86	0.65	0.42
		ΔT	24	22	18	12	24	22	18	12	24	22	18	12	24	**22**	18	13	24	22	18	12	22	20	17	12
		kW	2.88	2.94	3.03	3.12	3.09	3.16	3.25	3.36	3.28	3.35	3.45	3.57	3.45	**3.52**	3.63	3.75	3.59	3.66	3.78	3.91	3.71	3.79	3.91	4.04
		Amps	13.6	13.9	14.2	14.6	14.5	14.7	15.1	15.6	15.4	15.7	16.2	16.6	16.3	**16.6**	17.1	17.6	17.1	17.5	18.0	18.5	18.0	18.3	18.8	19.4
		Hi PR	231	248	262	274	259	279	294	307	294	317	335	349	335	**361**	381	398	377	406	429	447	417	449	474	494
		Lo PR	111	118	129	137	117	125	136	145	122	129	141	151	128	**136**	149	158	134	143	156	166	139	147	161	171
	1138	MBh	36.6	37.7	40.8	43.8	35.8	36.8	39.9	42.8	34.9	35.9	38.9	41.8	34.1	35.1	38.0	40.7	32.4	33.3	36.1	38.7	30.0	30.9	33.4	35.8
		S/T	0.81	0.72	0.55	0.35	0.84	0.75	0.57	0.36	0.86	0.77	0.58	0.37	0.89	0.79	0.60	0.39	0.92	0.82	0.62	0.40	0.93	0.83	0.63	0.40
		ΔT	24	22	18	12	24	22	18	13	24	22	18	13	24	22	18	13	24	22	18	13	22	21	17	12
		kW	2.81	2.87	2.96	3.05	3.02	3.08	3.18	3.28	3.20	3.27	3.37	3.48	3.36	3.43	3.54	3.66	3.50	3.57	3.69	3.81	3.62	3.70	3.81	3.94
		Amps	13.3	13.6	13.9	14.3	14.2	14.4	14.8	15.2	15.1	15.4	15.8	16.3	15.9	16.2	16.7	17.2	16.7	17.1	17.5	18.1	17.6	17.9	18.4	19.0
		Hi PR	224	241	254	265	251	270	285	298	286	307	325	339	325	350	370	386	366	394	416	434	404	435	460	479
		Lo PR	108	114	125	133	114	121	132	141	118	126	137	146	124	132	144	153	130	138	151	161	134	143	156	166

IDB: Entering Indoor Dry Bulb Temperature

Shaded area reflects ACCA (TVA) conditions.

kW = Total system power

High and low pressures are measured at the liquid and suction access fittings.

Amps: Unit amps (comp.+ evaporator + condenser fan motors)

			Outdoor Ambient Temperature																							
			65				75				85				95				105				115			
			Entering Indoor Wet Bulb Temperature																							
IDB	Airflow		59	63	67	71	59	63	67	71	59	63	67	71	59	63	67	71	59	63	67	71	59	63	67	71
80	1463	MBh	41.6	42.5	45.4	48.5	40.6	41.5	44.3	47.4	39.6	40.5	43.3	46.3	38.7	39.5	42.2	45.1	36.7	37.6	40.1	42.9	34.0	34.8	37.2	39.7
		S/T	0.96	0.90	0.74	0.55	1.00	0.94	0.76	0.57	1.00	0.96	0.78	0.58	1.00	1.00	0.81	0.60	1.00	1.00	0.84	0.63	1.00	1.00	0.84	0.63
		ΔT	25	24	21	17	26	24	21	17	25	24	21	17	24	25	21	17	23	24	21	17	21	22	20	16
		kW	2.92	2.98	3.07	3.17	3.14	3.21	3.31	3.41	3.33	3.40	3.51	3.62	3.50	3.58	3.69	3.81	3.65	3.72	3.84	3.97	3.77	3.85	3.98	4.11
		Amps	13.8	14.1	14.4	14.8	14.7	14.9	15.3	15.8	15.7	16.0	16.4	16.9	16.5	16.9	17.3	17.9	17.4	17.7	18.2	18.8	18.2	18.6	19.1	19.8
		Hi PR	235	253	268	279	264	284	300	313	300	323	341	356	342	368	389	406	385	414	437	456	425	458	483	504
		Lo PR	113	120	131	140	119	127	139	148	124	132	144	154	130	139	152	161	137	145	159	169	141	150	164	175
	1300	MBh	40.4	41.3	44.1	47.1	39.4	40.3	43.1	46.0	38.5	39.3	42.0	44.9	37.6	38.4	**41.0**	43.8	35.7	36.5	39.0	41.6	33.0	33.8	36.1	38.6
		S/T	0.92	0.86	0.70	0.52	0.95	0.89	0.73	0.54	0.98	0.92	0.75	0.56	1.00	0.95	**0.77**	0.58	1.00	0.98	0.80	0.60	1.00	0.99	0.81	0.60
		ΔT	26	25	22	17	27	25	22	18	27	25	22	18	27	26	**22**	18	25	25	22	18	23	24	21	16
		kW	2.90	2.96	3.05	3.15	3.12	3.18	3.28	3.38	3.31	3.38	3.48	3.59	3.47	3.55	**3.66**	3.78	3.62	3.69	3.81	3.94	3.74	3.82	3.94	4.07
		Amps	13.7	14.0	14.3	14.7	14.6	14.8	15.2	15.7	15.6	15.9	16.3	16.8	16.4	16.7	**17.2**	17.7	17.3	17.6	18.1	18.7	18.1	18.5	19.0	19.6
		Hi PR	233	251	265	276	262	281	297	310	297	320	338	353	339	365	**385**	402	381	410	433	452	421	453	479	499
		Lo PR	112	119	130	139	118	126	137	146	123	131	143	152	129	137	**150**	160	135	144	157	167	140	149	163	173
	1138	MBh	37.3	38.1	40.7	43.5	36.4	37.2	39.7	42.5	35.5	36.3	38.8	41.5	34.7	35.4	37.8	40.5	32.9	33.6	36.0	38.4	30.5	31.2	33.3	35.6
		S/T	0.89	0.83	0.68	0.51	0.92	0.86	0.70	0.52	0.94	0.88	0.72	0.54	0.97	0.91	0.74	0.55	1.01	0.95	0.77	0.58	1.02	0.95	0.78	0.58
		ΔT	27	26	22	18	27	26	23	18	27	26	23	18	27	26	23	18	27	26	22	18	25	24	21	17
		kW	2.84	2.89	2.98	3.07	3.04	3.11	3.20	3.30	3.23	3.30	3.40	3.51	3.39	3.46	3.57	3.69	3.53	3.60	3.72	3.84	3.65	3.73	3.85	3.97
		Amps	13.4	13.7	14.0	14.4	14.3	14.5	14.9	15.3	15.2	15.5	15.9	16.4	16.0	16.4	16.8	17.3	16.9	17.2	17.7	18.2	17.7	18.1	18.6	19.1
		Hi PR	226	243	257	268	254	273	288	301	289	311	328	342	329	354	373	390	370	398	420	438	408	440	464	484
		Lo PR	109	116	126	134	115	122	133	142	119	127	139	148	125	133	146	155	131	140	152	162	136	144	158	168
85	1463	MBh	42.3	43.1	45.2	48.2	41.3	42.1	44.1	47.1	40.3	41.1	43.1	45.9	39.4	40.1	42.0	44.8	37.4	38.1	39.9	42.6	34.6	35.3	37.0	39.4
		S/T	1.00	0.98	0.88	0.71	1.00	1.00	0.91	0.74	1.00	1.00	0.94	0.76	1.00	1.00	0.97	0.78	1.00	1.00	1.00	0.81	1.00	1.00	1.00	0.82
		ΔT	27	26	25	22	26	26	25	22	25	26	25	22	25	25	26	22	24	24	25	22	22	22	23	20
		kW	2.95	3.01	3.10	3.19	3.17	3.23	3.33	3.44	3.36	3.43	3.54	3.65	3.53	3.61	3.72	3.84	3.67	3.75	3.88	4.00	3.80	3.88	4.01	4.14
		Amps	13.9	14.2	14.5	14.9	14.8	15.1	15.4	15.9	15.8	16.1	16.5	17.0	16.7	17.0	17.5	18.0	17.5	17.9	18.4	19.0	18.4	18.8	19.3	19.9
		Hi PR	238	256	270	282	267	287	303	316	303	327	345	360	346	372	393	410	389	418	442	461	430	462	488	509
		Lo PR	114	122	133	141	121	128	140	149	125	133	146	155	132	140	153	163	138	147	160	171	143	152	166	177
	1300	MBh	41.1	41.9	43.9	46.8	40.1	40.9	42.8	45.7	39.2	39.9	41.8	44.6	38.2	39.0	40.8	43.5	36.3	37.0	38.8	41.3	33.6	34.3	35.9	38.3
		S/T	0.96	0.93	0.84	0.68	1.00	0.96	0.87	0.71	1.00	0.99	0.89	0.72	1.00	1.00	0.92	0.75	1.00	1.00	0.96	0.78	1.00	1.00	0.96	0.78
		ΔT	28	28	26	23	28	28	26	23	28	28	26	23	27	28	27	23	26	26	26	23	24	24	24	21
		kW	2.92	2.98	3.07	3.17	3.14	3.21	3.31	3.41	3.33	3.40	3.51	3.62	3.50	3.58	3.69	3.81	3.65	3.72	3.84	3.97	3.77	3.85	3.98	4.11
		Amps	13.8	14.1	14.4	14.8	14.7	14.9	15.3	15.8	15.7	16.0	16.4	16.9	16.5	16.9	17.3	17.9	17.4	17.7	18.2	18.8	18.2	18.6	19.1	19.8
		Hi PR	235	253	268	279	264	284	300	313	300	323	341	356	342	368	389	406	385	414	437	456	425	458	483	504
		Lo PR	113	120	131	140	119	127	139	148	124	132	144	154	130	139	152	161	137	145	159	169	141	150	164	175
	1138	MBh	37.9	38.6	40.5	43.2	37.0	37.7	39.5	42.2	36.2	36.9	38.6	41.2	35.3	36.0	37.7	40.2	33.5	34.2	35.8	38.2	31.0	31.6	33.1	35.4
		S/T	0.93	0.90	0.81	0.66	0.96	0.93	0.84	0.68	0.99	0.95	0.86	0.70	1.00	0.98	0.89	0.72	1.00	1.00	0.92	0.75	1.00	1.00	0.93	0.75
		ΔT	28	28	26	23	29	28	27	23	29	28	27	23	29	29	27	23	27	28	27	23	25	26	25	22
		kW	2.86	2.91	3.00	3.10	3.07	3.13	3.23	3.33	3.25	3.32	3.43	3.54	3.42	3.49	3.60	3.72	3.56	3.63	3.75	3.87	3.68	3.76	3.88	4.01
		Amps	13.5	13.8	14.1	14.5	14.4	14.6	15.0	15.4	15.3	15.6	16.0	16.5	16.2	16.5	16.9	17.4	17.0	17.3	17.8	18.4	17.8	18.2	18.7	19.3
		Hi PR	228	246	260	271	256	276	291	304	291	314	331	345	332	357	377	393	373	402	424	443	413	444	469	489
		Lo PR	110	117	127	136	116	123	135	143	120	128	140	149	127	135	147	157	133	141	154	164	137	146	159	170

IDB: Entering Indoor Dry Bulb Temperature

Shaded area reflects AHRI (TVA) conditions.

kW = Total system power

High and low pressures are measured at the liquid and suction access fittings.

Amps: Unit amps (comp.+ evaporator + condenser fan motors)

Expanded Cooling Data — DP14GM61***41A* — High Stage

			Outdoor Ambient Temperature																							
			65				75				85				95				105				115			
			Entering Indoor Wet Bulb Temperature																							
IDB	Airflow		59	63	67	71	59	63	67	71	59	63	67	71	59	63	67	71	59	63	67	71	59	63	67	71
70	1965	MBh	55.9	57.9	63.4	-	54.6	56.5	62.0	-	53.3	55.2	60.5	-	52.0	53.9	59.0	-	49.4	51.2	56.1	-	45.7	47.4	51.9	-
		S/T	0.75	0.62	0.43	-	0.77	0.65	0.45	-	0.79	0.66	0.46	-	0.82	0.68	0.47	-	0.85	0.71	0.49	-	0.86	0.72	0.50	-
		ΔT	20	17	13	-	20	17	13	-	20	17	13	-	20	17	13	-	20	17	13	-	18	16	12	-
		kW	4.08	4.16	4.28	-	4.37	4.46	4.60	-	4.63	4.73	4.87	-	4.86	4.96	5.12	-	5.06	5.16	5.33	-	5.23	5.34	5.51	-
		Amps	20.5	20.8	21.3	-	21.7	22.1	22.6	-	23.1	23.5	24.1	-	24.3	24.8	25.4	-	25.5	26.0	26.7	-	26.7	27.3	28.0	-
		Hi PR	251	270	285	-	281	303	320	-	320	344	364	-	365	392	414	-	410	441	466	-	453	488	515	-
		Lo PR	109	116	126	-	115	122	133	-	119	127	139	-	125	133	146	-	131	140	152	-	136	144	158	-
	1750	MBh	54.2	56.2	61.6	-	53.0	54.9	60.1	-	51.7	53.6	58.7	-	50.4	52.3	57.3	-	47.9	49.7	54.4	-	44.4	46.0	50.4	-
		S/T	0.71	0.59	0.41	-	0.74	0.62	0.43	-	0.76	0.63	0.44	-	0.78	0.65	0.45	-	0.81	0.68	0.47	-	0.82	0.68	0.47	-
		ΔT	20	18	13	-	21	18	13	-	21	18	14	-	21	18	14	-	20	18	13	-	19	17	13	-
		kW	4.05	4.13	4.25	-	4.34	4.43	4.56	-	4.60	4.69	4.84	-	4.82	4.93	5.08	-	5.02	5.12	5.28	-	5.18	5.29	5.46	-
		Amps	20.3	20.7	21.2	-	21.5	21.9	22.5	-	22.9	23.4	24.0	-	24.1	24.6	25.2	-	25.4	25.8	26.5	-	26.5	27.1	27.8	-
		Hi PR	248	267	282	-	279	300	317	-	317	341	360	-	361	388	410	-	406	437	461	-	449	483	510	-
		Lo PR	108	114	125	-	114	121	132	-	118	126	137	-	124	132	144	-	130	138	151	-	134	143	156	-
	1535	MBh	50.1	51.9	56.8	-	48.9	50.7	55.5	-	47.7	49.5	54.2	-	46.6	48.3	52.9	-	44.2	45.8	50.2	-	41.0	42.5	46.5	-
		S/T	0.69	0.57	0.40	-	0.71	0.59	0.41	-	0.73	0.61	0.42	-	0.75	0.63	0.44	-	0.78	0.65	0.45	-	0.79	0.66	0.46	-
		ΔT	21	18	14	-	21	18	14	-	21	18	14	-	21	18	14	-	21	18	14	-	19	17	13	-
		kW	3.96	4.04	4.15	-	4.24	4.33	4.46	-	4.49	4.58	4.72	-	4.71	4.81	4.96	-	4.90	5.00	5.16	-	5.06	5.17	5.33	-
		Amps	19.9	20.3	20.8	-	21.1	21.5	22.0	-	22.5	22.9	23.4	-	23.6	24.1	24.7	-	24.8	25.3	25.9	-	26.0	26.5	27.2	-
		Hi PR	241	259	274	-	270	291	307	-	307	331	349	-	350	377	398	-	394	424	448	-	435	468	494	-
		Lo PR	104	111	121	-	110	117	128	-	115	122	133	-	120	128	140	-	126	134	146	-	130	139	151	-
75	1965	MBh	56.8	58.5	63.3	67.9	55.5	57.1	61.8	66.4	54.2	55.8	60.4	64.8	52.8	54.4	58.9	63.2	50.2	51.7	55.9	60.0	46.5	47.9	51.8	55.6
		S/T	0.85	0.76	0.57	0.37	0.88	0.79	0.60	0.38	0.90	0.81	0.61	0.39	0.93	0.83	0.63	0.41	0.97	0.86	0.65	0.42	0.97	0.87	0.66	0.42
		ΔT	23	21	17	12	23	21	17	12	23	21	17	12	23	21	17	12	23	21	17	12	21	20	16	11
		kW	4.11	4.19	4.32	4.45	4.41	4.50	4.63	4.78	4.67	4.77	4.91	5.07	4.90	5.00	5.16	5.33	5.10	5.21	5.37	5.54	5.27	5.38	5.55	5.73
		Amps	20.6	21.0	21.5	22.1	21.8	22.2	22.8	23.4	23.3	23.7	24.3	25.0	24.5	25.0	25.6	26.4	25.7	26.2	26.9	27.8	26.9	27.5	28.2	29.1
		Hi PR	253	273	288	300	284	306	323	337	323	348	367	383	368	396	418	436	414	446	471	491	458	493	520	543
		Lo PR	110	117	127	136	116	123	135	143	120	128	140	149	127	135	147	157	133	141	154	164	137	146	159	170
	1750	MBh	55.1	56.8	61.5	66.0	53.9	55.5	60.0	64.4	52.6	54.1	58.6	62.9	51.3	**52.8**	57.2	61.4	48.7	50.2	54.3	58.3	45.1	46.5	50.3	54.0
		S/T	0.81	0.72	0.55	0.35	0.84	0.75	0.57	0.37	0.86	0.77	0.58	0.37	0.89	**0.79**	0.60	0.39	0.92	0.82	0.62	0.40	0.93	0.83	0.63	0.40
		ΔT	23	22	18	12	24	22	18	12	24	22	18	12	24	**22**	18	12	24	22	18	12	22	20	17	11
		kW	4.08	4.16	4.28	4.41	4.37	4.46	4.60	4.74	4.63	4.73	4.88	5.03	4.86	**4.96**	5.12	5.28	5.06	5.16	5.33	5.50	5.23	5.34	5.51	5.69
		Amps	20.5	20.8	21.3	21.9	21.7	22.1	22.6	23.3	23.1	23.5	24.1	24.8	24.3	**24.8**	25.4	26.2	25.5	26.0	26.7	27.5	26.7	27.3	28.0	28.9
		Hi PR	251	270	285	297	281	303	320	334	320	344	364	379	365	**392**	414	432	410	441	466	486	453	488	515	537
		Lo PR	109	116	126	134	115	122	133	142	119	127	139	148	125	**133**	146	155	131	140	153	162	136	145	158	168
	1535	MBh	50.9	52.4	56.7	60.9	49.7	51.2	55.4	59.5	48.5	50.0	54.1	58.1	47.3	48.8	52.8	56.6	45.0	46.3	50.1	53.8	41.7	42.9	46.4	49.8
		S/T	0.78	0.70	0.53	0.34	0.81	0.72	0.55	0.35	0.83	0.74	0.56	0.36	0.86	0.77	0.58	0.37	0.89	0.79	0.60	0.39	0.90	0.80	0.61	0.39
		ΔT	24	22	18	12	24	22	18	13	24	22	18	13	24	22	18	13	24	22	18	12	22	21	17	12
		kW	3.99	4.07	4.19	4.31	4.27	4.36	4.49	4.63	4.53	4.62	4.76	4.91	4.75	4.85	5.00	5.16	4.94	5.04	5.20	5.37	5.10	5.21	5.37	5.55
		Amps	20.1	20.4	20.9	21.5	21.2	21.6	22.2	22.8	22.6	23.0	23.6	24.3	23.8	24.2	24.9	25.6	25.0	25.5	26.1	26.9	26.1	26.7	27.4	28.2
		Hi PR	243	262	276	288	273	294	310	324	311	334	353	368	354	381	402	419	398	428	452	472	440	473	500	521
		Lo PR	105	112	122	130	111	118	129	138	116	123	134	143	122	129	141	150	127	136	148	158	132	140	153	163

IDB: Entering Indoor Dry Bulb Temperature

Shaded area reflects ACCA (TVA) conditions.

kW = Total system power

High and low pressures are measured at the liquid and suction access fittings.

Amps: Unit amps (comp.+ evaporator + condenser fan motors)

Design Subcooling, 11±3 °F @ the liquid access fitting connection AHRI 95 test conditions. Design Superheat 11±2 °F @ the compressor suction access fitting connection.

Expanded Cooling Data — DP14GM61***41A* — High Stage (cont.)

			Outdoor Ambient Temperature																							
			65				75				85				95				105				115			
			Entering Indoor Wet Bulb Temperature																							
IDB	Airflow		59	63	67	71	59	63	67	71	59	63	67	71	59	63	67	71	59	63	67	71	59	63	67	71
80	1965	MBh	57.8	59.1	63.1	67.5	56.5	57.7	61.6	65.9	55.1	56.3	60.2	64.3	53.8	55.0	58.7	62.8	51.1	52.2	55.8	59.6	47.3	48.4	51.7	55.2
		S/T	0.93	0.87	0.71	0.53	0.96	0.90	0.74	0.55	1.00	0.93	0.76	0.56	1.00	0.96	0.78	0.58	1.00	1.00	0.81	0.60	1.00	1.00	0.82	0.61
		ΔT	25	24	21	17	25	24	21	17	26	24	21	17	25	25	21	17	24	24	21	17	22	23	20	16
		kW	4.14	4.22	4.35	4.48	4.44	4.53	4.67	4.81	4.71	4.80	4.95	5.11	4.94	5.04	5.20	5.37	5.14	5.25	5.41	5.59	5.31	5.42	5.60	5.78
		Amps	20.7	21.1	21.6	22.2	22.0	22.4	23.0	23.6	23.4	23.9	24.5	25.2	24.7	25.1	25.8	26.6	25.9	26.4	27.1	28.0	27.1	27.7	28.4	29.3
		Hi PR	256	275	291	303	287	309	326	340	327	351	371	387	372	400	423	441	418	450	476	496	462	498	525	548
		Lo PR	111	118	129	137	117	125	136	145	122	129	141	151	128	136	148	158	134	143	156	166	139	147	161	171
	1750	MBh	56.1	57.4	61.3	65.5	54.8	56.0	59.9	64.0	53.5	54.7	58.4	62.5	52.2	53.4	**57.0**	60.9	49.6	50.7	54.2	57.9	45.9	46.9	50.2	53.6
		S/T	0.89	0.83	0.68	0.51	0.92	0.86	0.70	0.52	0.94	0.88	0.72	0.54	0.97	0.91	**0.74**	0.56	1.00	0.95	0.77	0.58	1.00	0.96	0.78	0.58
		ΔT	26	25	22	17	26	25	22	18	27	25	22	18	27	26	**22**	18	26	25	22	18	24	24	20	16
		kW	4.11	4.19	4.32	4.45	4.41	4.50	4.63	4.78	4.67	4.77	4.91	5.07	4.90	5.00	**5.16**	5.33	5.10	5.21	5.37	5.54	5.27	5.38	5.55	5.73
		Amps	20.6	21.0	21.5	22.1	21.8	22.2	22.8	23.4	23.3	23.7	24.3	25.0	24.5	25.0	**25.6**	26.4	25.7	26.2	26.9	27.8	26.9	27.5	28.2	29.1
		Hi PR	253	273	288	300	284	306	323	337	323	348	367	383	368	396	**419**	436	414	446	471	491	458	493	520	543
		Lo PR	110	117	127	136	116	123	135	143	120	128	140	149	127	135	**147**	157	133	141	154	164	137	146	159	170
	1535	MBh	51.8	52.9	56.6	60.5	50.6	51.7	55.2	59.1	49.4	50.5	53.9	57.6	48.2	49.2	52.6	56.2	45.8	46.8	50.0	53.4	42.4	43.3	46.3	49.5
		S/T	0.86	0.80	0.65	0.49	0.89	0.83	0.68	0.51	0.91	0.85	0.69	0.52	0.94	0.88	0.72	0.54	0.97	0.91	0.74	0.56	0.98	0.92	0.75	0.56
		ΔT	27	25	22	18	27	26	22	18	27	26	22	18	27	26	23	18	27	26	22	18	25	24	21	17
		kW	4.02	4.10	4.22	4.35	4.31	4.39	4.53	4.67	4.56	4.65	4.80	4.95	4.79	4.89	5.04	5.20	4.98	5.08	5.24	5.41	5.14	5.25	5.42	5.59
		Amps	20.2	20.5	21.0	21.6	21.4	21.8	22.3	22.9	22.8	23.2	23.8	24.5	24.0	24.4	25.1	25.8	25.2	25.6	26.3	27.1	26.3	26.9	27.6	28.4
		Hi PR	246	264	279	291	276	297	313	327	314	338	356	372	357	384	406	423	402	432	457	476	444	478	505	526
		Lo PR	106	113	124	132	112	120	131	139	117	124	136	145	123	131	143	152	129	137	149	159	133	142	155	165
85	1965	MBh	58.8	60.0	62.8	67.0	57.5	58.6	61.3	65.4	56.1	57.2	59.9	63.9	54.7	55.8	58.4	62.3	52.0	53.0	55.5	59.2	48.2	49.1	51.4	54.8
		S/T	0.98	0.94	0.85	0.69	1.00	0.98	0.88	0.71	1.00	1.00	0.90	0.73	1.00	1.00	0.93	0.76	1.00	1.00	0.97	0.78	1.00	1.00	0.98	0.79
		ΔT	27	26	25	22	27	27	25	22	26	27	25	22	26	26	25	22	24	25	25	22	23	23	23	20
		kW	4.17	4.26	4.38	4.52	4.47	4.57	4.71	4.85	4.74	4.84	4.99	5.15	4.98	5.08	5.24	5.41	5.18	5.29	5.46	5.63	5.35	5.47	5.64	5.83
		Amps	20.9	21.3	21.8	22.4	22.1	22.5	23.1	23.8	23.6	24.0	24.7	25.4	24.8	25.3	26.0	26.8	26.1	26.6	27.3	28.2	27.3	27.9	28.7	29.5
		Hi PR	258	278	294	306	290	312	330	344	330	355	375	391	376	404	427	445	423	455	480	501	467	503	531	553
		Lo PR	112	119	130	138	118	126	137	146	123	131	143	152	129	137	150	160	135	144	157	167	140	149	163	173
	1750	MBh	57.1	58.2	61.0	65.0	55.8	56.9	59.6	63.5	54.5	55.5	58.1	62.0	53.1	54.2	56.7	60.5	50.5	51.4	53.9	57.5	46.7	47.7	49.9	53.2
		S/T	0.93	0.90	0.81	0.66	0.96	0.93	0.84	0.68	0.99	0.95	0.86	0.70	1.00	0.98	0.89	0.72	1.00	1.00	0.92	0.75	1.00	1.00	0.93	0.75
		ΔT	28	27	26	22	28	28	26	23	28	28	26	23	28	28	26	23	27	27	26	23	25	25	24	21
		kW	4.14	4.22	4.35	4.48	4.44	4.53	4.67	4.81	4.71	4.80	4.95	5.11	4.94	5.04	5.20	5.37	5.14	5.25	5.41	5.59	5.31	5.42	5.60	5.78
		Amps	20.7	21.1	21.6	22.2	22.0	22.4	23.0	23.6	23.4	23.9	24.5	25.2	24.7	25.1	25.8	26.6	25.9	26.4	27.1	28.0	27.1	27.7	28.4	29.3
		Hi PR	256	275	291	303	287	309	326	340	327	351	371	387	372	400	423	441	418	450	476	496	462	498	525	548
		Lo PR	111	118	129	137	117	125	136	145	122	129	141	151	128	136	148	158	134	143	156	166	139	147	161	171
	1535	MBh	52.7	53.7	56.3	60.0	51.5	52.5	55.0	58.6	50.3	51.2	53.7	57.2	49.0	50.0	52.3	55.8	46.6	47.5	49.7	53.1	43.1	44.0	46.1	49.1
		S/T	0.90	0.87	0.78	0.63	0.93	0.90	0.81	0.66	0.95	0.92	0.83	0.67	0.98	0.95	0.86	0.70	1.00	0.99	0.89	0.72	1.00	0.99	0.90	0.73
		ΔT	28	28	26	23	29	28	27	23	29	28	27	23	29	28	27	23	28	28	26	23	26	26	25	21
		kW	4.05	4.13	4.25	4.38	4.34	4.43	4.56	4.70	4.60	4.69	4.84	4.99	4.82	4.92	5.08	5.24	5.02	5.12	5.28	5.45	5.18	5.29	5.46	5.64
		Amps	20.3	20.7	21.2	21.8	21.5	21.9	22.5	23.1	22.9	23.4	24.0	24.7	24.1	24.6	25.2	26.0	25.3	25.8	26.5	27.3	26.5	27.1	27.8	28.6
		Hi PR	248	267	282	294	279	300	317	330	317	341	360	375	361	388	410	428	406	437	461	481	448	483	510	532
		Lo PR	108	114	125	133	114	121	132	140	118	126	137	146	124	132	144	153	130	138	151	161	134	143	156	166

IDB: Entering Indoor Dry Bulb Temperature

Shaded area reflects AHRI (TVA) conditions.

kW = Total system power

High and low pressures are measured at the liquid and suction access fittings.

Amps: Unit amps (comp.+ evaporator + condenser fan motors)

Design Subcooling, 11±3 °F @ the liquid access fitting connection AHRI 95 test conditions. Design Superheat 11±2 °F @ the compressor suction access fitting connection.

Expanded Cooling Data — DP14GM61***41C* — Low Stage

			Outdoor Ambient Temperature																							
			65				75				85				95				105				115			
			Entering Indoor Wet Bulb Temperature																							
IDB	Airflow		59	63	67	71	59	63	67	71	59	63	67	71	59	63	67	71	59	63	67	71	59	63	67	71
70	975	MBh	41.0	41.6	42.8	-	40.6	41.2	42.4	-	39.6	40.2	41.4	-	37.7	38.3	39.5	-	35.5	36.1	37.3	-	33.4	34.0	35.2	-
		S/T	0.63	0.55	0.41	-	0.64	0.56	0.42	-	0.66	0.58	0.44	-	1.00	0.60	0.46	-	1.00	0.63	0.49	-	1.00	0.68	0.54	-
		ΔT	20	19	15	-	20	18	15	-	21	19	15	-	20	18	15	-	20	18	15	-	21	19	16	-
		kW	2.31	2.31	2.30	-	2.58	2.58	2.58	-	2.89	2.89	2.88	-	3.22	3.22	3.21	-	3.59	3.59	3.58	-	4.03	4.02	4.02	-
		Amps	8.2	8.2	8.1	-	9.4	9.3	9.3	-	10.7	10.7	10.7	-	12.1	12.1	12.1	-	13.7	13.7	13.7	-	15.6	15.6	15.6	-
		Hi PR	267	268	270	-	309	310	312	-	353	354	356	-	400	401	403	-	451	452	454	-	506	507	509	-
		Lo PR	125	126	130	-	132	134	137	-	139	141	144	-	145	146	149	-	150	152	155	-	157	159	162	-
	1100	MBh	41.5	42.1	43.3	-	41.1	41.7	42.9	-	40.1	40.6	41.9	-	38.2	38.8	40.0	-	36.0	36.6	37.8	-	33.9	34.5	35.7	-
		S/T	0.68	0.61	0.47	-	0.69	0.61	0.47	-	0.72	0.64	0.50	-	1.00	0.66	0.52	-	1.00	0.68	0.54	-	1.00	0.73	0.59	-
		ΔT	19	18	14	-	19	17	14	-	20	18	14	-	19	17	14	-	19	17	14	-	20	18	15	-
		kW	2.32	2.32	2.31	-	2.60	2.59	2.59	-	2.90	2.90	2.90	-	3.23	3.23	3.23	-	3.60	3.60	3.60	-	4.04	4.04	4.03	-
		Amps	8.2	8.2	8.2	-	9.4	9.4	9.4	-	10.7	10.7	10.7	-	12.2	12.2	12.2	-	13.8	13.8	13.8	-	15.7	15.7	15.7	-
		Hi PR	269	270	272	-	311	312	314	-	355	356	358	-	402	403	405	-	453	454	456	-	508	509	511	-
		Lo PR	126	128	131	-	134	136	139	-	141	142	145	-	146	148	151	-	152	153	157	-	159	160	163	-
	1325	MBh	42.6	43.2	44.4	-	42.3	42.8	44.1	-	41.2	41.8	43.0	-	39.3	39.9	41.2	-	37.1	37.7	38.9	-	35.0	35.6	36.8	-
		S/T	0.73	0.65	0.51	-	0.74	0.66	0.52	-	1.00	0.68	0.54	-	1.00	0.70	0.56	-	1.00	0.73	0.59	-	1.00	1.00	0.64	-
		ΔT	18	16	12	-	18	16	12	-	18	16	13	-	18	16	12	-	18	16	12	-	19	17	13	-
		kW	2.34	2.34	2.33	-	2.61	2.61	2.61	-	2.92	2.92	2.91	-	3.25	3.25	3.25	-	3.62	3.62	3.62	-	4.06	4.06	4.05	-
		Amps	8.3	8.3	8.3	-	9.5	9.5	9.5	-	10.8	10.8	10.8	-	12.3	12.3	12.2	-	13.9	13.9	13.8	-	15.8	15.8	15.7	-
		Hi PR	272	273	275	-	314	315	317	-	358	359	361	-	406	407	409	-	457	458	460	-	511	513	514	-
		Lo PR	130	131	135	-	138	139	142	-	144	146	149	-	150	151	154	-	155	157	160	-	162	164	167	-
75	975	MBh	41.0	41.6	42.8	44.7	40.7	41.2	42.5	44.3	39.6	40.2	41.4	43.3	37.8	38.3	39.6	41.4	35.5	36.1	37.3	39.2	33.5	34.0	35.3	37.1
		S/T	0.76	0.68	0.54	0.40	0.77	0.69	0.55	0.40	1.00	0.72	0.58	0.43	1.00	0.74	0.60	0.45	1.00	0.76	0.62	0.47	1.00	1.00	0.67	0.53
		ΔT	25	23	19	16	25	23	19	15	25	23	19	16	25	23	19	15	24	22	19	15	25	24	20	16
		kW	2.31	2.30	2.30	2.32	2.58	2.58	2.57	2.60	2.89	2.89	2.88	2.90	3.22	3.22	3.21	3.23	3.59	3.59	3.58	3.60	4.02	4.02	4.02	4.04
		Amps	8.2	8.1	8.1	8.2	9.3	9.3	9.3	9.4	10.7	10.7	10.7	10.7	12.1	12.1	12.1	12.2	13.7	13.7	13.7	13.8	15.6	15.6	15.6	15.7
		Hi PR	267	268	270	275	309	310	312	317	353	354	356	361	400	401	403	408	451	453	454	459	506	507	509	514
		Lo PR	125	126	130	135	132	134	137	142	139	141	144	149	145	146	149	155	150	152	155	160	157	159	162	167
	1100	MBh	41.5	42.1	43.3	45.2	41.2	41.7	43.0	44.8	40.1	40.7	41.9	43.8	38.2	38.8	40.1	41.9	36.0	36.6	37.8	39.7	33.9	34.5	35.7	37.6
		S/T	0.82	0.74	0.60	0.45	1.00	0.75	0.61	0.46	1.00	0.77	0.63	0.48	1.00	0.79	0.65	0.50	1.00	0.81	0.67	0.53	1.00	1.00	0.73	0.58
		ΔT	24	22	18	14	24	22	18	14	24	22	18	15	24	22	18	14	23	21	18	14	24	23	19	15
		kW	2.32	2.32	2.31	2.33	2.59	2.59	2.59	2.61	2.90	2.90	2.89	2.91	3.23	3.23	3.23	3.25	3.60	3.60	3.60	3.62	4.04	4.04	4.03	4.05
		Amps	8.2	8.2	8.2	8.3	9.4	9.4	9.4	9.5	10.7	10.7	10.7	10.8	12.2	12.2	12.1	12.2	13.8	13.8	13.8	13.9	15.7	15.7	15.6	15.7
		Hi PR	269	270	272	277	311	312	314	319	355	356	358	363	402	404	405	410	453	455	457	461	508	509	511	516
		Lo PR	127	128	131	137	134	136	139	144	141	142	145	151	146	148	151	156	152	153	157	162	159	160	163	169
	1325	MBh	42.6	43.2	44.5	46.3	42.3	42.9	44.1	46.0	41.2	41.8	43.0	44.9	39.4	**40.0**	41.2	43.0	37.1	37.7	38.9	40.8	35.1	35.6	36.9	38.7
		S/T	0.86	0.78	0.64	0.50	1.00	0.79	0.65	0.50	1.00	0.82	0.68	0.53	1.00	**0.84**	0.70	0.55	1.00	1.00	0.72	0.57	1.00	1.00	0.77	0.63
		ΔT	22	20	17	13	22	20	17	13	22	20	17	13	22	**20**	17	13	22	20	16	13	23	21	17	14
		kW	2.34	2.34	2.33	2.35	2.61	2.61	2.61	2.63	2.92	2.92	2.91	2.93	3.25	**3.25**	3.24	3.27	3.62	3.62	3.61	3.64	4.06	4.05	4.05	4.07
		Amps	8.3	8.3	8.3	8.4	9.5	9.5	9.5	9.5	10.8	10.8	10.8	10.9	12.3	**12.3**	12.2	12.3	13.9	13.9	13.8	13.9	15.8	15.8	15.7	15.8
		Hi PR	272	274	276	280	315	316	318	322	359	360	362	366	406	**407**	409	414	457	458	460	465	512	513	515	519
		Lo PR	130	132	135	140	138	139	142	148	144	146	149	154	150	**151**	155	160	155	157	160	165	162	164	167	172

IDB: Entering Indoor Dry Bulb Temperature

Shaded area reflects ACCA (TVA) conditions.

kW = Total system power

High and low pressures are measured at the liquid and suction access fittings.

Amps: Unit amps (comp.+ evaporator + condenser fan motors)

			Outdoor Ambient Temperature																							
			65				75				85				95				105				115			
			Entering Indoor Wet Bulb Temperature																							
IDB	Airflow		59	63	67	71	59	63	67	71	59	63	67	71	59	63	67	71	59	63	67	71	59	63	67	71
80	975	MBh	41.2	41.8	43.0	44.9	40.9	41.5	42.7	44.6	39.8	40.4	41.6	43.5	38.0	38.5	39.8	41.6	35.7	36.3	37.5	39.4	33.7	34.2	35.5	37.3
		S/T	1.00	0.81	0.67	0.53	1.00	0.82	0.68	0.53	1.00	0.85	0.71	0.56	1.00	1.00	0.73	0.58	1.00	1.00	0.75	0.60	1.00	1.00	0.80	0.65
		ΔT	29	27	23	20	29	27	23	20	29	27	24	20	29	27	23	20	29	27	23	19	30	28	24	21
		kW	2.31	2.31	2.30	2.32	2.58	2.58	2.58	2.60	2.89	2.89	2.88	2.90	3.22	3.22	3.21	3.24	3.59	3.59	3.58	3.61	4.03	4.02	4.02	4.04
		Amps	8.2	8.2	8.1	8.2	9.4	9.3	9.3	9.4	10.7	10.7	10.7	10.7	12.1	12.1	12.1	12.2	13.7	13.7	13.7	13.8	15.6	15.6	15.6	15.7
		Hi PR	267	268	270	275	309	311	312	317	353	355	356	361	401	402	404	408	452	453	455	460	506	508	510	514
		Lo PR	125	127	130	135	133	135	138	143	140	141	144	150	145	147	150	155	151	152	155	161	158	159	162	168
	1100	MBh	41.7	42.3	43.5	45.4	41.4	42.0	43.2	45.0	40.3	40.9	42.1	44.0	38.5	39.0	40.3	42.1	36.2	36.8	38.0	39.9	34.2	34.7	36.0	37.8
		S/T	1.00	0.87	0.73	0.58	1.00	0.87	0.74	0.59	1.00	0.90	0.76	0.61	1.00	1.00	0.78	0.63	1.00	1.00	0.80	0.66	1.00	1.00	0.86	0.71
		ΔT	28	26	22	19	28	26	22	19	28	26	23	19	28	26	22	19	27	26	22	18	29	27	23	20
		kW	2.32	2.32	2.31	2.34	2.60	2.59	2.59	2.61	2.90	2.90	2.90	2.92	3.23	3.23	3.23	3.25	3.60	3.60	3.60	3.62	4.04	4.04	4.03	4.05
		Amps	8.2	8.2	8.2	8.3	9.4	9.4	9.4	9.5	10.7	10.7	10.7	10.8	12.2	12.2	12.2	12.2	13.8	13.8	13.8	13.9	15.7	15.7	15.7	15.7
		Hi PR	269	271	272	277	311	313	314	319	355	357	358	363	403	404	406	411	454	455	457	462	509	510	512	516
		Lo PR	127	129	132	137	135	136	139	145	141	143	146	151	147	148	152	157	152	154	157	162	159	161	164	169
	1325	MBh	42.9	43.4	44.7	46.5	42.5	43.1	44.3	46.2	41.4	42.0	43.2	45.1	39.6	40.2	**41.4**	43.3	37.3	37.9	39.1	41.0	35.3	35.9	37.1	39.0
		S/T	1.00	0.91	0.77	0.63	1.00	0.92	0.78	0.63	1.00	1.00	0.81	0.66	1.00	1.00	**0.83**	0.68	1.00	1.00	0.85	0.70	1.00	1.00	1.00	0.75
		ΔT	26	24	21	17	26	24	21	17	27	25	21	17	26	24	**21**	17	26	24	21	17	27	25	22	18
		kW	2.34	2.34	2.33	2.35	2.61	2.61	2.61	2.63	2.92	2.92	2.91	2.94	3.25	3.25	**3.25**	3.27	3.62	3.62	3.62	3.64	4.06	4.06	4.05	4.07
		Amps	8.3	8.3	8.3	8.4	9.5	9.5	9.5	9.6	10.8	10.8	10.8	10.9	12.3	12.3	**12.2**	12.3	13.9	13.9	13.8	13.9	15.8	15.8	15.7	15.8
		Hi PR	273	274	276	281	315	316	318	323	359	360	362	367	406	408	**410**	414	458	459	461	465	512	513	515	520
		Lo PR	131	132	135	141	138	140	143	148	145	146	149	155	150	152	**155**	160	156	157	161	166	163	164	167	173
85	975	MBh	41.9	42.5	43.7	45.6	41.6	42.1	43.4	45.2	40.5	41.1	42.3	44.2	38.7	39.2	40.5	42.3	36.4	37.0	38.2	40.1	34.4	34.9	36.2	38.0
		S/T	1.00	0.92	0.78	0.63	1.00	1.00	0.78	0.64	1.00	1.00	0.81	0.66	1.00	1.00	0.83	0.68	1.00	1.00	0.85	0.71	1.00	1.00	1.00	0.76
		ΔT	33	31	27	23	33	31	27	23	33	31	27	24	33	31	27	23	32	30	27	23	33	32	28	24
		kW	2.31	2.31	2.31	2.33	2.59	2.59	2.58	2.60	2.89	2.89	2.89	2.91	3.23	3.22	3.22	3.24	3.60	3.59	3.59	3.61	4.03	4.03	4.02	4.05
		Amps	8.2	8.2	8.2	8.2	9.4	9.4	9.3	9.4	10.7	10.7	10.7	10.8	12.2	12.1	12.1	12.2	13.8	13.8	13.7	13.8	15.7	15.6	15.6	15.7
		Hi PR	269	270	272	276	311	312	314	318	355	356	358	362	402	403	405	410	453	454	456	461	508	509	511	515
		Lo PR	127	129	132	137	135	136	140	145	141	143	146	151	147	149	152	157	153	154	157	163	160	161	164	170
	1100	MBh	42.4	43.0	44.2	46.1	42.1	42.6	43.9	45.7	41.0	41.6	42.8	44.7	39.2	39.7	41.0	42.8	36.9	37.5	38.7	40.6	34.8	35.4	36.7	38.5
		S/T	1.00	0.97	0.83	0.69	1.00	1.00	0.84	0.69	1.00	1.00	0.86	0.72	1.00	1.00	0.88	0.74	1.00	1.00	1.00	0.76	1.00	1.00	1.00	0.81
		ΔT	32	30	26	22	31	30	26	22	32	30	26	23	31	30	26	22	31	29	26	22	32	31	27	23
		kW	2.33	2.32	2.32	2.34	2.60	2.60	2.59	2.62	2.91	2.91	2.90	2.92	3.24	3.24	3.23	3.25	3.61	3.61	3.60	3.62	4.04	4.04	4.04	4.06
		Amps	8.2	8.2	8.2	8.3	9.4	9.4	9.4	9.5	10.8	10.8	10.7	10.8	12.2	12.2	12.2	12.3	13.8	13.8	13.8	13.9	15.7	15.7	15.7	15.8
		Hi PR	271	272	274	278	313	314	316	320	357	358	360	364	404	405	407	412	455	456	458	463	510	511	513	517
		Lo PR	129	130	134	139	137	138	141	147	143	145	148	153	149	150	153	159	154	156	159	164	161	163	166	171
	1325	MBh	43.6	44.1	45.4	47.2	43.2	43.8	45.0	46.9	42.1	42.7	43.9	45.8	40.3	40.9	42.1	43.9	38.0	38.6	39.8	41.7	36.0	36.6	37.8	39.6
		S/T	1.00	1.00	0.88	0.73	1.00	1.00	0.88	0.74	1.00	1.00	0.91	0.76	1.00	1.00	0.93	0.78	1.00	1.00	1.00	0.81	1.00	1.00	1.00	0.86
		ΔT	30	28	25	21	30	28	25	21	30	28	25	21	30	28	24	21	30	28	24	21	31	29	25	22
		kW	2.35	2.34	2.34	2.36	2.62	2.62	2.61	2.63	2.93	2.92	2.92	2.94	3.26	3.26	3.25	3.27	3.63	3.63	3.62	3.64	4.06	4.06	4.06	4.08
		Amps	8.3	8.3	8.3	8.4	9.5	9.5	9.5	9.6	10.8	10.8	10.8	10.9	12.3	12.3	12.3	12.4	13.9	13.9	13.9	14.0	15.8	15.8	15.8	15.9
		Hi PR	274	275	277	282	316	317	319	324	360	361	363	368	408	409	411	415	459	460	462	467	513	515	516	521
		Lo PR	132	134	137	142	140	142	145	150	147	148	151	157	152	154	157	162	158	159	162	168	165	166	169	175

IDB: Entering Indoor Dry Bulb Temperature

Shaded area reflects AHRI (TVA) conditions.

kW = Total system power

High and low pressures are measured at the liquid and suction access fittings.

Amps: Unit amps (comp.+ evaporator + condenser fan motors)

			OUTDOOR AMBIENT TEMPERATURE																							
			65				75				85				95				105				115			
			ENTERING INDOOR WET BULB TEMPERATURE																							
IDB	AIRFLOW		59	63	67	71	59	63	67	71	59	63	67	71	59	63	67	71	59	63	67	71	59	63	67	71
70	1700	MBh	57.7	58.5	60.2	-	57.2	58.0	59.7	-	55.7	56.5	58.2	-	53.2	54.0	55.7	-	50.0	50.8	52.5	-	47.2	48.0	49.7	-
		S/T	0.67	0.59	0.45	-	0.67	0.60	0.46	-	0.70	0.62	0.49	-	0.72	0.64	0.51	-	1.00	0.66	0.53	-	1.00	0.71	0.58	-
		ΔT	20	18	14	-	20	18	14	-	20	18	15	-	20	18	14	-	20	18	14	-	21	19	15	-
		kW	3.69	3.69	3.68	-	4.13	4.12	4.12	-	4.61	4.61	4.60	-	5.14	5.14	5.13	-	5.73	5.73	5.72	-	6.42	6.42	6.41	-
		Amps	13.1	13.1	13.0	-	15.0	14.9	14.9	-	17.1	17.1	17.0	-	19.4	19.4	19.3	-	21.9	21.9	21.9	-	24.9	24.9	24.9	-
		Hi PR	281	282	284	-	325	326	328	-	371	372	374	-	421	422	424	-	474	475	477	-	531	532	534	-
		Lo PR	123	125	128	-	130	132	135	-	137	138	141	-	142	144	147	-	148	149	152	-	154	156	159	-
	1800	MBh	58.1	58.9	60.6	-	57.6	58.4	60.1	-	56.1	56.9	58.6	-	53.6	54.4	56.1	-	50.4	51.2	52.9	-	47.6	48.4	50.1	-
		S/T	0.69	0.61	0.47	-	0.69	0.62	0.48	-	0.72	0.64	0.50	-	1.00	0.66	0.52	-	1.00	0.68	0.55	-	1.00	0.73	0.60	-
		ΔT	20	18	14	-	20	18	14	-	20	18	14	-	20	18	14	-	19	17	14	-	21	19	15	-
		kW	3.70	3.70	3.69	-	4.14	4.13	4.13	-	4.62	4.62	4.61	-	5.15	5.15	5.14	-	5.74	5.74	5.73	-	6.43	6.43	6.42	-
		Amps	13.1	13.1	13.1	-	15.0	15.0	15.0	-	17.1	17.1	17.1	-	19.4	19.4	19.4	-	22.0	22.0	21.9	-	25.0	25.0	24.9	-
		Hi PR	282	283	285	-	326	327	329	-	372	373	375	-	422	423	425	-	475	476	478	-	532	533	535	-
		Lo PR	124	125	129	-	131	133	136	-	138	139	142	-	143	145	148	-	149	150	153	-	155	157	160	-
	1900	MBh	58.6	59.4	61.1	-	58.1	58.9	60.6	-	56.6	57.4	59.1	-	54.0	54.8	56.5	-	50.9	51.7	53.4	-	48.0	48.8	50.5	-
		S/T	0.70	0.62	0.49	-	0.71	0.63	0.49	-	0.73	0.65	0.52	-	1.00	0.67	0.54	-	1.00	0.70	0.56	-	1.00	0.75	0.61	-
		ΔT	19	17	14	-	19	17	13	-	19	17	14	-	19	17	13	-	19	17	13	-	20	18	14	-
		kW	3.71	3.71	3.70	-	4.15	4.14	4.13	-	4.63	4.63	4.62	-	5.16	5.16	5.15	-	5.75	5.75	5.74	-	6.44	6.44	6.43	-
		Amps	13.1	13.1	13.1	-	15.0	15.0	15.0	-	17.2	17.1	17.1	-	19.5	19.4	19.4	-	22.0	22.0	22.0	-	25.0	25.0	25.0	-
		Hi PR	283	284	286	-	327	328	330	-	373	374	376	-	423	424	426	-	476	477	479	-	533	535	537	-
		Lo PR	125	126	129	-	132	134	137	-	139	140	143	-	144	146	149	-	150	151	154	-	156	158	161	-
75	1700	MBh	57.8	58.6	60.3	62.9	57.2	58.0	59.8	62.4	55.8	56.6	58.3	60.9	53.2	**54.0**	55.7	58.3	50.1	50.9	52.6	55.2	47.2	48.0	49.7	52.3
		S/T	0.80	0.72	0.58	0.44	0.80	0.73	0.59	0.45	1.00	0.75	0.62	0.47	1.00	**0.77**	0.63	0.49	1.00	0.79	0.66	0.51	1.00	1.00	0.71	0.57
		ΔT	24	22	19	15	24	22	19	15	25	23	19	15	24	**22**	19	15	24	22	18	15	25	23	20	16
		kW	3.69	3.68	3.68	3.71	4.12	4.12	4.11	4.15	4.61	4.61	4.60	4.63	5.14	**5.14**	5.13	5.16	5.73	5.72	5.72	5.75	6.42	6.42	6.41	6.44
		Amps	13.1	13.0	13.0	13.2	15.0	14.9	14.9	15.1	17.1	17.1	17.0	17.2	19.4	**19.3**	19.3	19.5	21.9	21.9	21.9	22.0	24.9	24.9	24.9	25.0
		Hi PR	281	282	284	289	325	326	328	333	371	372	374	379	421	**422**	424	429	474	476	478	482	531	533	535	539
		Lo PR	123	125	128	133	130	132	135	140	137	138	141	147	142	**144**	147	152	148	149	152	157	154	156	159	164
	1800	MBh	58.2	59.0	60.7	63.3	57.6	58.5	60.2	62.8	56.2	57.0	58.7	61.3	53.6	54.4	56.1	58.7	50.5	51.3	53.0	55.6	47.6	48.4	50.1	52.7
		S/T	0.81	0.74	0.60	0.46	0.82	0.74	0.61	0.47	1.00	0.77	0.63	0.49	1.00	0.79	0.65	0.51	1.00	0.81	0.68	0.53	1.00	1.00	0.73	0.58
		ΔT	24	22	18	15	24	22	18	14	24	22	19	15	24	22	18	14	24	22	18	14	25	23	19	15
		kW	3.70	3.69	3.69	3.72	4.13	4.13	4.12	4.16	4.62	4.62	4.61	4.64	5.15	5.14	5.14	5.17	5.74	5.73	5.73	5.76	6.43	6.42	6.42	6.45
		Amps	13.1	13.1	13.0	13.2	15.0	15.0	14.9	15.1	17.1	17.1	17.1	17.2	19.4	19.4	19.4	19.5	22.0	21.9	21.9	22.1	25.0	25.0	24.9	25.1
		Hi PR	282	284	286	290	326	328	329	334	372	374	376	380	422	423	425	430	475	477	479	483	533	534	536	541
		Lo PR	124	125	129	134	131	133	136	141	138	139	142	148	143	145	148	153	149	150	153	158	155	157	160	165
	1900	MBh	58.6	59.4	61.1	63.7	58.1	58.9	60.6	63.2	56.6	57.4	59.1	61.7	54.0	54.8	56.5	59.1	50.9	51.7	53.4	56.0	48.1	48.9	50.6	53.2
		S/T	0.83	0.75	0.62	0.47	0.83	0.76	0.62	0.48	1.00	0.78	0.65	0.50	1.00	0.80	0.67	0.52	1.00	0.83	0.69	0.55	1.00	1.00	0.74	0.60
		ΔT	24	22	18	14	23	21	18	14	24	22	18	14	23	21	18	14	23	21	18	14	24	22	19	15
		kW	3.71	3.70	3.70	3.73	4.14	4.14	4.13	4.17	4.63	4.63	4.62	4.65	5.16	5.15	5.15	5.18	5.75	5.74	5.73	5.77	6.44	6.43	6.43	6.46
		Amps	13.1	13.1	13.1	13.2	15.0	15.0	15.0	15.1	17.1	17.1	17.1	17.2	19.4	19.4	19.4	19.5	22.0	22.0	22.0	22.1	25.0	25.0	25.0	25.1
		Hi PR	283	285	287	291	327	329	331	335	373	375	377	381	423	424	426	431	477	478	480	485	534	535	537	542
		Lo PR	125	126	129	135	132	134	137	142	139	140	143	148	144	146	149	154	150	151	154	159	156	158	161	166

IDB: Entering Indoor Dry Bulb Temperature

Shaded area reflects ACCA (TVA) conditions.

kW = Total system power

High and low pressures are measured at the liquid and suction access fittings.

Amps: Unit amps (comp.+ evaporator + condenser fan motors)

Design Subcooling, 11±3 °F @ the liquid access fitting connection AHRI 95 test conditions. Design Superheat 11±2 °F @ the compressor suction access fitting connection.

			Outdoor Ambient Temperature																							
			65				75				85				95				105				115			
			Entering Indoor Wet Bulb Temperature																							
IDB	Airflow		59	63	67	71	59	63	67	71	59	63	67	71	59	63	67	71	59	63	67	71	59	63	67	71
80	1700	MBh	58.1	58.9	60.6	63.2	57.5	58.3	60.0	62.6	56.1	56.9	58.6	61.2	53.5	54.3	**56.0**	58.6	50.4	51.2	52.9	55.5	47.5	48.3	50.0	52.6
		S/T	1.00	0.85	0.71	0.57	1.00	0.85	0.72	0.57	1.00	0.88	0.74	0.60	1.00	0.90	**0.76**	0.62	1.00	1.00	0.78	0.64	1.00	1.00	0.83	0.69
		ΔT	29	27	23	19	29	27	23	19	29	27	23	20	29	27	**23**	19	28	27	23	19	30	28	24	20
		kW	3.69	3.69	3.68	3.71	4.13	4.12	4.12	4.15	4.61	4.61	4.60	4.64	5.14	5.14	**5.13**	5.16	5.73	5.73	5.72	5.75	6.42	6.42	6.41	6.44
		Amps	13.1	13.1	13.0	13.2	15.0	14.9	14.9	15.1	17.1	17.1	17.0	17.2	19.4	19.4	**19.3**	19.5	21.9	21.9	21.9	22.0	24.9	24.9	24.9	25.0
		Hi PR	282	283	285	290	326	327	329	334	372	373	375	380	421	423	**425**	429	475	476	478	483	532	533	535	540
		Lo PR	124	125	128	133	131	132	136	141	137	139	142	147	143	144	**147**	153	148	150	153	158	155	156	160	165
	1800	MBh	58.5	59.3	61.0	63.6	57.9	58.7	60.4	63.0	56.5	57.3	59.0	61.6	53.9	54.7	56.4	59.0	50.8	51.6	53.3	55.9	47.9	48.7	50.4	53.0
		S/T	1.00	0.86	0.73	0.59	1.00	0.87	0.73	0.59	1.00	0.90	0.76	0.62	1.00	0.91	0.78	0.64	1.00	1.00	0.80	0.66	1.00	1.00	0.85	0.71
		ΔT	28	26	23	19	28	26	23	19	29	27	23	19	28	26	23	19	28	26	22	19	29	27	24	20
		kW	3.70	3.70	3.69	3.72	4.14	4.13	4.13	4.16	4.62	4.62	4.61	4.65	5.15	5.15	5.14	5.17	5.74	5.74	5.73	5.76	6.43	6.43	6.42	6.45
		Amps	13.1	13.1	13.1	13.2	15.0	15.0	15.0	15.1	17.1	17.1	17.1	17.2	19.4	19.4	19.4	19.5	22.0	22.0	21.9	22.1	25.0	25.0	24.9	25.1
		Hi PR	283	284	286	291	327	328	330	335	373	374	376	381	422	424	426	431	476	477	479	484	533	534	536	541
		Lo PR	124	126	129	134	132	133	136	142	138	140	143	148	144	145	148	154	149	151	154	159	156	157	160	166
	1900	MBh	58.9	59.7	61.4	64.0	58.4	59.2	60.9	63.5	56.9	57.7	59.4	62.0	54.3	55.1	56.8	59.4	51.2	52.0	53.7	56.3	48.4	49.2	50.9	53.5
		S/T	1.00	0.88	0.74	0.60	1.00	0.88	0.75	0.61	1.00	0.91	0.77	0.63	1.00	1.00	0.79	0.65	1.00	1.00	0.81	0.67	1.00	1.00	0.87	0.72
		ΔT	28	26	22	18	28	26	22	18	28	26	22	19	28	26	22	18	28	26	22	18	29	27	23	19
		kW	3.71	3.71	3.70	3.73	4.14	4.14	4.13	4.17	4.63	4.63	4.62	4.65	5.16	5.16	5.15	5.18	5.75	5.74	5.74	5.77	6.44	6.44	6.43	6.46
		Amps	13.1	13.1	13.1	13.2	15.0	15.0	15.0	15.1	17.2	17.1	17.1	17.3	19.5	19.4	19.4	19.5	22.0	22.0	22.0	22.1	25.0	25.0	25.0	25.1
		Hi PR	284	285	287	292	328	329	331	336	374	375	377	382	424	425	427	432	477	478	480	485	534	535	537	542
		Lo PR	125	127	130	135	133	134	137	143	139	141	144	149	145	146	149	154	150	152	155	160	157	158	161	167
85	1700	MBh	59.0	59.8	61.5	64.1	58.5	59.3	61.0	63.6	57.0	57.8	59.5	62.1	54.5	55.3	57.0	59.6	51.3	52.1	53.8	56.4	48.5	49.3	51.0	53.6
		S/T	1.00	0.95	0.81	0.67	1.00	0.95	0.82	0.67	1.00	1.00	0.84	0.70	1.00	1.00	0.86	0.72	1.00	1.00	0.88	0.74	1.00	1.00	1.00	0.79
		ΔT	33	31	27	23	33	31	27	23	33	31	27	23	33	31	27	23	32	30	27	23	34	32	28	24
		kW	3.70	3.70	3.69	3.72	4.14	4.13	4.12	4.16	4.62	4.62	4.61	4.64	5.15	5.15	5.14	5.17	5.74	5.74	5.73	5.76	6.43	6.43	6.42	6.45
		Amps	13.1	13.1	13.1	13.2	15.0	15.0	15.0	15.1	17.1	17.1	17.1	17.2	19.4	19.4	19.4	19.5	22.0	22.0	21.9	22.1	25.0	25.0	24.9	25.1
		Hi PR	283	284	286	291	327	328	330	335	373	374	376	381	423	424	426	431	476	477	479	484	533	534	536	541
		Lo PR	125	127	130	135	133	134	137	143	139	141	144	149	145	146	149	154	150	152	155	160	157	158	161	167
	1800	MBh	59.4	60.2	61.9	64.5	58.9	59.7	61.4	64.0	57.4	58.2	59.9	62.5	54.9	55.7	57.4	60.0	51.7	52.5	54.2	56.8	48.9	49.7	51.4	54.0
		S/T	1.00	0.97	0.83	0.69	1.00	0.97	0.84	0.69	1.00	1.00	0.86	0.72	1.00	1.00	0.88	0.74	1.00	1.00	0.90	0.76	1.00	1.00	1.00	0.81
		ΔT	32	30	27	23	32	30	26	23	32	30	27	23	32	30	26	23	32	30	26	22	33	31	27	24
		kW	3.71	3.70	3.70	3.73	4.14	4.14	4.13	4.17	4.63	4.63	4.62	4.65	5.16	5.16	5.15	5.18	5.75	5.74	5.74	5.77	6.44	6.44	6.43	6.46
		Amps	13.1	13.1	13.1	13.2	15.0	15.0	15.0	15.1	17.2	17.1	17.1	17.3	19.4	19.4	19.4	19.5	22.0	22.0	22.0	22.1	25.0	25.0	25.0	25.1
		Hi PR	284	285	287	292	328	329	331	336	374	375	377	382	424	425	427	432	477	478	480	485	534	536	538	542
		Lo PR	126	128	131	136	134	135	138	143	140	142	145	150	146	147	150	155	151	152	156	161	158	159	162	167
	1900	MBh	59.9	60.7	62.4	65.0	59.3	60.1	61.8	64.4	57.9	58.7	60.4	63.0	55.3	56.1	57.8	60.4	52.2	53.0	54.7	57.3	49.3	50.1	51.8	54.4
		S/T	1.00	0.98	0.84	0.70	1.00	1.00	0.85	0.71	1.00	1.00	0.87	0.73	1.00	1.00	0.89	0.75	1.00	1.00	0.92	0.77	1.00	1.00	1.00	0.82
		ΔT	32	30	26	22	32	30	26	22	32	30	26	23	32	30	26	22	31	29	26	22	33	31	27	23
		kW	3.72	3.71	3.71	3.74	4.15	4.15	4.14	4.18	4.64	4.64	4.63	4.66	5.17	5.16	5.16	5.19	5.76	5.75	5.75	5.78	6.45	6.44	6.44	6.47
		Amps	13.2	13.2	13.1	13.3	15.1	15.1	15.0	15.2	17.2	17.2	17.1	17.3	19.5	19.5	19.4	19.6	22.0	22.0	22.0	22.1	25.1	25.0	25.0	25.1
		Hi PR	285	286	288	293	329	330	332	337	375	376	378	383	425	426	428	433	478	480	482	486	535	537	539	543
		Lo PR	127	129	132	137	135	136	139	144	141	143	146	151	147	148	151	156	152	153	157	162	159	160	163	168

IDB: Entering Indoor Dry Bulb Temperature

Shaded area reflects AHRI (TVA) conditions.

kW = Total system power

High and low pressures are measured at the liquid and suction access fittings.

Amps: Unit amps (comp.+ evaporator + condenser fan motors)

Design Subcooling, 11±3 °F @ the liquid access fitting connection AHRI 95 test conditions. Design Superheat 11±2 °F @ the compressor suction access fitting connection.

DP14GM2404041 - Rise Range: 25° - 55°**

E.S.P.	T1 Heating Speed			T2 Heating Speed			T3 Heating Speed			T4 Cooling Speed		T5 Cooling Speed	
	Cfm	Watts	Rise	Cfm	Watts	Rise	Cfm	Watts	Rise	Cfm	Watts	Cfm	Watts
0.1	695	62	44	820	93	37	1,050	167	29	850	100	1,095	198
0.2	650	71	47	785	100	39	1,010	180	30	800	106	1,060	202
0.3	605	77	51	745	108	41	970	186	32	765	116	1,025	214
0.4	565	89	54	700	117	44	935	192	33	730	125	985	217
0.5	480	99	X	665	127	46	890	203	35	680	131	945	227
0.6	415	106	X	575	138	53	850	208	36	610	141	905	233
0.7	365	110	X	510	146	X	815	216	38	550	153	865	237
0.8	320	119	X	455	155	X	755	222	41	490	159	825	246

DP14GM2406041 - Rise Range: 30° - 60°**

E.S.P.	T1 Heating Speed			T2 Heating Speed			T3 Heating Speed			T4 Cooling Speed		T5 Cooling Speed	
	Cfm	Watts	Rise	Cfm	Watts	Rise	Cfm	Watts	Rise	Cfm	Watts	Cfm	Watts
0.1	695	62	X	820	93	56	1,050	167	44	850	100	1,095	198
0.2	650	71	X	785	100	59	1,010	180	46	800	106	1,060	202
0.3	605	77	X	745	108	X	970	186	48	765	116	1,025	214
0.4	565	89	X	700	117	X	935	192	49	730	125	985	217
0.5	480	99	X	665	127	X	890	203	52	680	131	945	227
0.6	415	106	X	575	138	X	850	208	54	610	141	905	233
0.7	365	110	X	510	146	X	815	216	57	550	153	865	237
0.8	320	119	X	455	155	X	755	222	X	490	159	825	246

DP14GM3004041 - Rise Range: 25° - 55°**

E.S.P.	T1 Heating Speed			T2 Heating Speed			T3 Heating Speed			T4 Cooling Speed		T5 Cooling Speed	
	Cfm	Watts	Rise	Cfm	Watts	Rise	Cfm	Watts	Rise	Cfm	Watts	Cfm	Watts
0.1	680	61	45	840	103	37	1,035	174	30	1,035	174	1,225	276
0.2	640	72	48	795	109	39	995	184	31	995	184	1,185	275
0.3	605	80	51	750	117	41	960	192	32	960	192	1,150	289
0.4	555	89	X	710	126	43	925	205	33	925	205	1,115	296
0.5	490	93	X	660	132	47	875	200	35	875	200	1,085	303
0.6	455	107	X	615	138	50	840	217	37	840	217	1,045	312
0.7	395	109	X	570	150	54	795	222	39	795	222	1,000	315
0.8	350	119	X	515	157	X	755	226	41	755	226	960	320

DP14GM3006041 - Rise Range: 30° - 60°**

E.S.P.	T1 Heating Speed			T2 Heating Speed			T3 Heating Speed			T4 Cooling Speed		T5 Cooling Speed	
	Cfm	Watts	Rise	Cfm	Watts	Rise	Cfm	Watts	Rise	Cfm	Watts	Cfm	Watts
0.1	680	61	X	840	103	55	1,035	174	45	1,035	174	1,225	276
0.2	640	72	X	795	109	58	995	184	46	995	184	1,185	275
0.3	605	80	X	750	117	X	960	192	48	960	192	1,150	289
0.4	555	89	X	710	126	X	925	205	50	925	205	1,115	296
0.5	490	93	X	660	132	X	875	200	53	875	200	1,085	303
0.6	455	107	X	615	138	X	840	217	55	840	217	1,045	312
0.7	395	109	X	570	150	X	795	222	58	795	222	1,000	315
0.8	350	119	X	515	157	X	755	226	X	755	226	960	320

DP14GM3604041 - Rise Range: 25° - 55°**

E.S.P.	T1 Heating Speed			T2 Heating Speed			T3 Heating Speed			T4 Cooling Speed		T5 Cooling Speed	
	Cfm	Watts	Rise	Cfm	Watts	Rise	Cfm	Watts	Rise	Cfm	Watts	Cfm	Watts
0.1	745	76	41	1,115	206	28	1,265	285	X	1,305	311	1,440	426
0.2	690	84	45	1,075	215	29	1,230	290	X	1,265	320	1,390	428
0.3	635	91	48	1,030	221	30	1,175	300	26	1,225	325	1,365	440
0.4	570	98	54	985	233	31	1,140	303	27	1,180	334	1,335	440
0.5	505	107	X	940	234	33	1,100	311	28	1,140	338	1,295	456
0.6	450	115	X	895	242	34	1,055	319	29	1,095	349	1,255	456
0.7	395	118	X	845	248	36	1,010	326	30	1,050	350	1,220	465
0.8	345	126	X	785	252	39	960	335	32	1,010	357	1,180	468

DP14GM3606041 - Rise Range: 30° - 60°**

E.S.P.	T1 Heating Speed			T2 Heating Speed			T3 Heating Speed			T4 Cooling Speed		T5 Cooling Speed	
	Cfm	Watts	Rise	Cfm	Watts	Rise	Cfm	Watts	Rise	Cfm	Watts	Cfm	Watts
0.1	745	76	X	1,115	206	41	1,265	285	36	1,305	311	1,440	426
0.2	690	84	X	1,075	215	43	1,230	290	37	1,265	320	1,390	428
0.3	635	91	X	1,030	221	45	1,175	300	39	1,225	325	1,365	440
0.4	570	98	X	985	233	47	1,140	303	40	1,180	334	1,335	440
0.5	505	107	X	940	234	49	1,100	311	42	1,140	338	1,295	456
0.6	450	115	X	895	242	52	1,055	319	44	1,095	349	1,255	456
0.7	395	118	X	845	248	55	1,010	326	46	1,050	350	1,220	465
0.8	345	126	X	785	252	59	960	335	48	1,010	357	1,180	468

DP14GM3608041 - Rise Range: 30° - 60°**

E.S.P.	T1 Heating Speed			T2 Heating Speed			T3 Heating Speed			T4 Cooling Speed		T5 Cooling Speed	
	Cfm	Watts	Rise	Cfm	Watts	Rise	Cfm	Watts	Rise	Cfm	Watts	Cfm	Watts
0.1	745	76	X	1,115	206	55	1,265	285	49	1,305	311	1,440	426
0.2	690	84	X	1,075	215	57	1,230	290	50	1,265	320	1,390	428
0.3	635	91	X	1,030	221	60	1,175	300	52	1,225	325	1,365	440
0.4	570	98	X	985	233	X	1,140	303	54	1,180	334	1,335	440
0.5	505	107	X	940	234	X	1,100	311	56	1,140	338	1,295	456
0.6	450	115	X	895	242	X	1,055	319	58	1,095	349	1,255	456
0.7	395	118	X	845	248	X	1,010	326	X	1,050	350	1,220	465
0.8	345	126	X	785	252	X	960	335	X	1,010	357	1,180	468

DP14GM4206041 - Rise Range: 30° - 60°**

E.S.P.	T1 Heating Speed			T2 Heating Speed			T3 Heating Speed			T4 Cooling Speed		T5 Cooling Speed	
	Cfm	Watts	Rise	Cfm	Watts	Rise	Cfm	Watts	Rise	Cfm	Watts	Cfm	Watts
0.1	1,055	156	44	1,380	298	33	1,415	327	33	1,415	327	1,630	556
0.2	1,000	166	46	1,320	312	35	1,360	335	34	1,360	335	1,595	561
0.3	940	173	49	1,270	318	36	1,305	343	35	1,305	343	1,555	566
0.4	880	181	52	1,220	327	38	1,260	353	37	1,260	353	1,520	571
0.5	825	189	56	1,160	336	40	1,200	359	38	1,200	359	1,485	568
0.6	760	204	X	1,115	342	41	1,150	371	40	1,150	371	1,450	576
0.7	705	207	X	1,060	347	44	1,110	375	42	1,110	375	1,410	579
0.8	625	210	X	1,000	361	46	1,060	381	44	1,060	381	1,370	590

DP14GM4208041 - Rise Range: 30° - 60°**

E.S.P.	T1 Heating Speed			T2 Heating Speed			T3 Heating Speed			T4 Cooling Speed		T5 Cooling Speed	
	Cfm	Watts	Rise	Cfm	Watts	Rise	Cfm	Watts	Rise	Cfm	Watts	Cfm	Watts
0.1	1,055	156	44	1,380	298	33	1,415	327	33	1,415	327	1,630	556
0.2	1,000	166	46	1,320	312	35	1,360	335	34	1,360	335	1,595	561
0.3	940	173	49	1,270	318	36	1,305	343	35	1,305	343	1,555	566
0.4	880	181	52	1,220	327	38	1,260	353	37	1,260	353	1,520	571
0.5	825	189	56	1,160	336	40	1,200	359	38	1,200	359	1,485	568
0.6	760	204	X	1,115	342	41	1,150	371	40	1,150	371	1,450	576
0.7	705	207	X	1,060	347	44	1,110	375	42	1,110	375	1,410	579
0.8	625	210	X	1,000	361	46	1,060	381	44	1,060	381	1,370	590

DP14GM4806041 - Rise Range: 30° - 60°**

E.S.P.	T1 Heating Speed			T2 Heating Speed			T3 Heating Speed			T4 Cooling Speed		T5 Cooling Speed	
	Cfm	Watts	Rise	Cfm	Watts	Rise	Cfm	Watts	Rise	Cfm	Watts	Cfm	Watts
0.1	1,055	156	44	1,380	298	33	1,415	327	33	1,630	504	1,780	647
0.2	1,000	166	46	1,320	312	35	1,360	335	34	1,583	511	1,740	658
0.3	940	173	49	1,270	318	36	1,305	343	35	1,541	523	1,695	661
0.4	880	181	52	1,220	327	38	1,260	353	37	1,486	536	1,640	679
0.5	825	189	56	1,160	336	40	1,200	359	38	1,441	535	1,595	675
0.6	760	204	X	1,115	342	41	1,150	371	40	1,396	544	1,550	693
0.7	705	207	X	1,060	347	44	1,110	375	42	1,348	548	1,505	690
0.8	625	210	X	1,000	361	46	1,060	381	44	1,301	557	1,465	696

DP14GM4808041 - Rise Range: 30° - 60°**

E.S.P.	T1 Heating Speed			T2 Heating Speed			T3 Heating Speed			T4 Cooling Speed		T5 Cooling Speed	
	Cfm	Watts	Rise	Cfm	Watts	Rise	Cfm	Watts	Rise	Cfm	Watts	Cfm	Watts
0.1	1,055	156	58	1,380	298	45	1,415	327	43	1,630	504	1,780	647
0.2	1,000	166	X	1,320	312	47	1,360	335	45	1,583	511	1,740	658
0.3	940	173	X	1,270	318	48	1,305	343	47	1,541	523	1,695	661
0.4	880	181	X	1,220	327	50	1,260	353	49	1,486	536	1,640	679
0.5	825	189	X	1,160	336	53	1,200	359	51	1,441	535	1,595	675
0.6	760	204	X	1,115	342	55	1,150	371	53	1,396	544	1,550	693
0.7	705	207	X	1,060	347	58	1,110	375	55	1,348	548	1,505	690
0.8	625	210	X	1,000	361	X	1,060	381	58	1,301	557	1,465	696

DP14GM4810041 - Rise Range: 35° - 65°**

E.S.P.	T1 Heating Speed			T2 Heating Speed			T3 Heating Speed			T4 Cooling Speed		T5 Cooling Speed	
	Cfm	Watts	Rise	Cfm	Watts	Rise	Cfm	Watts	Rise	Cfm	Watts	Cfm	Watts
0.1	1,055	156	X	1,380	298	56	1,570	327	49	1,630	504	1,780	647
0.2	1,000	166	X	1,320	312	58	1,520	335	51	1,583	511	1,740	658
0.3	940	173	X	1,270	318	61	1,480	343	52	1,541	523	1,695	661
0.4	880	181	X	1,220	327	63	1,425	353	54	1,486	536	1,640	679
0.5	825	189	X	1,160	336	X	1,380	359	56	1,441	535	1,595	675
0.6	760	204	X	1,115	342	X	1,335	371	58	1,396	544	1,550	693
0.7	705	207	X	1,060	347	X	1,285	375	60	1,348	548	1,505	690
0.8	625	210	X	1,000	361	X	1,235	381	62	1,301	557	1,465	696

DP14GM6108041 - Rise Range: 30° - 60°**

ESP	T1 Low-Stage Heating			T2 High-Stage Heating			T3 Low-Stage Cooling		T4 High-Stage Cooling		T5 Cooling Speed	
	CFM	Watts	RISE	CFM	Watts	RISE	CFM	Watts	CFM	Watts	CFM	Watts
0.1	1,285	252	36	1,370	297	45	1,340	276	1780	620	1,940	844
0.2	1,235	259	37	1,330	304	46	1,270	279	1745	646	1,910	834
0.3	1,180	272	39	1,280	314	48	1,235	292	1700	640	1,880	840
0.4	1,130	272	41	1,220	321	50	1,175	296	1655	638	1,825	857
0.5	1,085	280	42	1,180	341	52	1,135	308	1610	656	1,790	865
0.6	1,035	294	45	1,135	339	54	1,085	318	1560	659	1,735	867
0.7	975	297	47	1,085	347	57	1,040	328	1520	664	1,700	877
0.8	910	319	51	1,035	359	59	975	337	1475	675	1,660	886

DP14GM6110041 - Rise Range: 35° - 65°**

ESP	T1 Low-Stage Heating			T2 High-Stage Heating			T3 Low-Stage Cooling		T4 High-Stage Cooling		T5 Cooling Speed	
	CFM	Watts	RISE	CFM	Watts	RISE	CFM	Watts	CFM	Watts	CFM	Watts
0.1	1,175	169	49	1,485	311	52	1,340	276	1780	620	1,940	844
0.2	1,115	178	52	1,425	317	54	1,270	279	1745	646	1,910	834
0.3	1,045	183	55	1,385	331	55	1,235	292	1700	640	1,880	840
0.4	985	194	59	1,350	341	57	1,175	296	1655	638	1,825	857
0.5	905	199	64	1,295	351	59	1,135	308	1610	656	1,790	865
0.6	840	215	X	1,235	359	62	1,085	318	1560	659	1,735	867
0.7	770	218	X	1,180	371	X	1,040	328	1520	664	1,700	877
0.8	700	229	X	1,125	386	X	975	337	1475	675	1,660	886

DP14GM6112041 - Rise Range: 35° - 65°**

ESP	T1 Low-Stage Heating			T2 High-Stage Heating			T3 Low-Stage Cooling		T4 High-Stage Cooling		T5 Cooling Speed	
	CFM	Watts	RISE	CFM	Watts	RISE	CFM	Watts	CFM	Watts	CFM	Watts
0.1	1,345	281	51	1,745	558	53	1,340	276	1780	620	1,940	729
0.2	1,300	286	53	1,705	567	54	1,270	279	1745	646	1,897	736
0.3	1,255	295	55	1,660	572	56	1,235	292	1700	640	1,855	742
0.4	1,205	308	57	1,620	582	57	1,175	296	1655	638	1,811	750
0.5	1,165	322	59	1,580	589	58	1,135	308	1610	656	1,764	757
0.6	1,110	335	62	1,535	604	60	1,085	318	1560	659	1,726	763
0.7	1,055	334	X	1,485	613	62	1,040	328	1520	664	1,682	770
0.8	1,010	346	X	1,435	606	64	975	337	1475	675	1,639	776

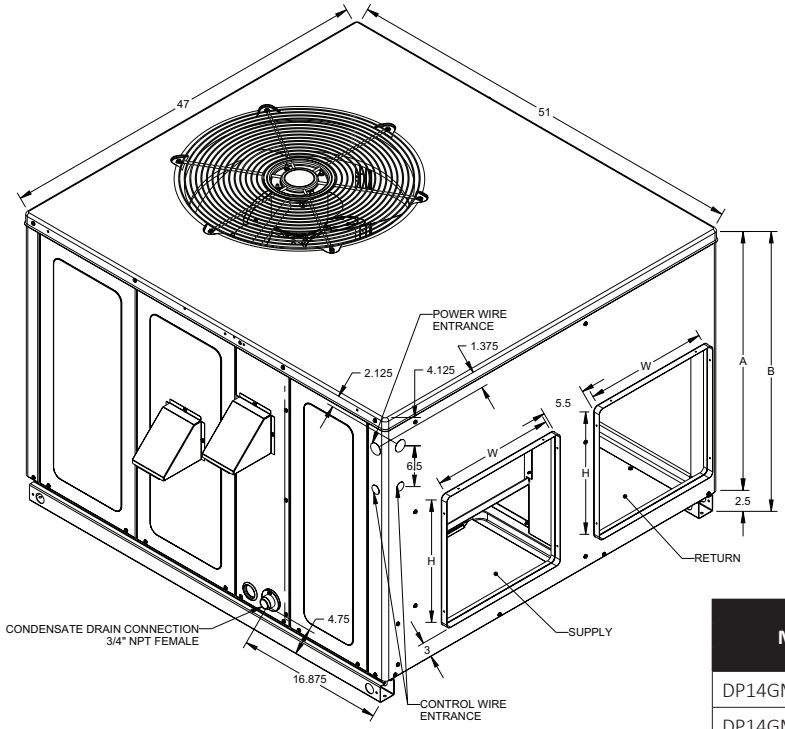

Model	Unit Dimensions (Inches)				Chassis Size
			Height		
	W	D	A	B	
DP14GM24***41**	47	51	32	34½	Medium
DP14GM30***41**	47	51	32	34½	Medium
DP14GM36***41**	47	51	32	34½	Medium
DP14GM42***41A*	47	51	32	34½	Medium
DP14GM42***41C*	47	51	40	42½	Large
DP14GM48***41**	47	51	40	42½	Large
DP14GM61***41**	47	51	40	42½	Large

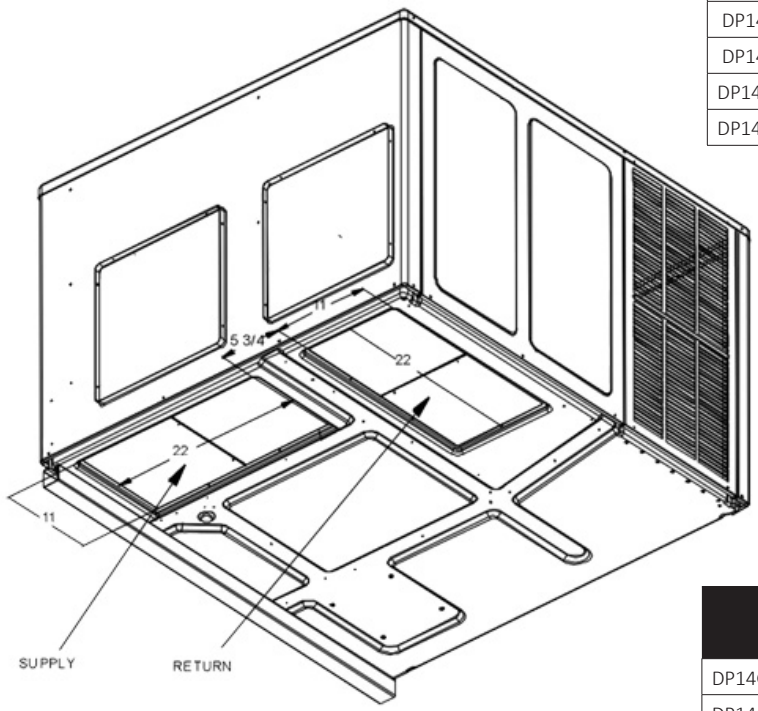

Model	Duct Openings			
	Supply		Return	
	W	H	W	H
DP14GM24***41**	16	16	16	16
DP14GM30***41**	16	18	16	16
DP14GM36***41**	16	18	16	16
DP14GM42***41A*	16	16	16	16
DP14GM42***41C*	16	18	16	18
DP14GM48***41**	16	18	16	18
DP14GM61***41**	16	18	16	18

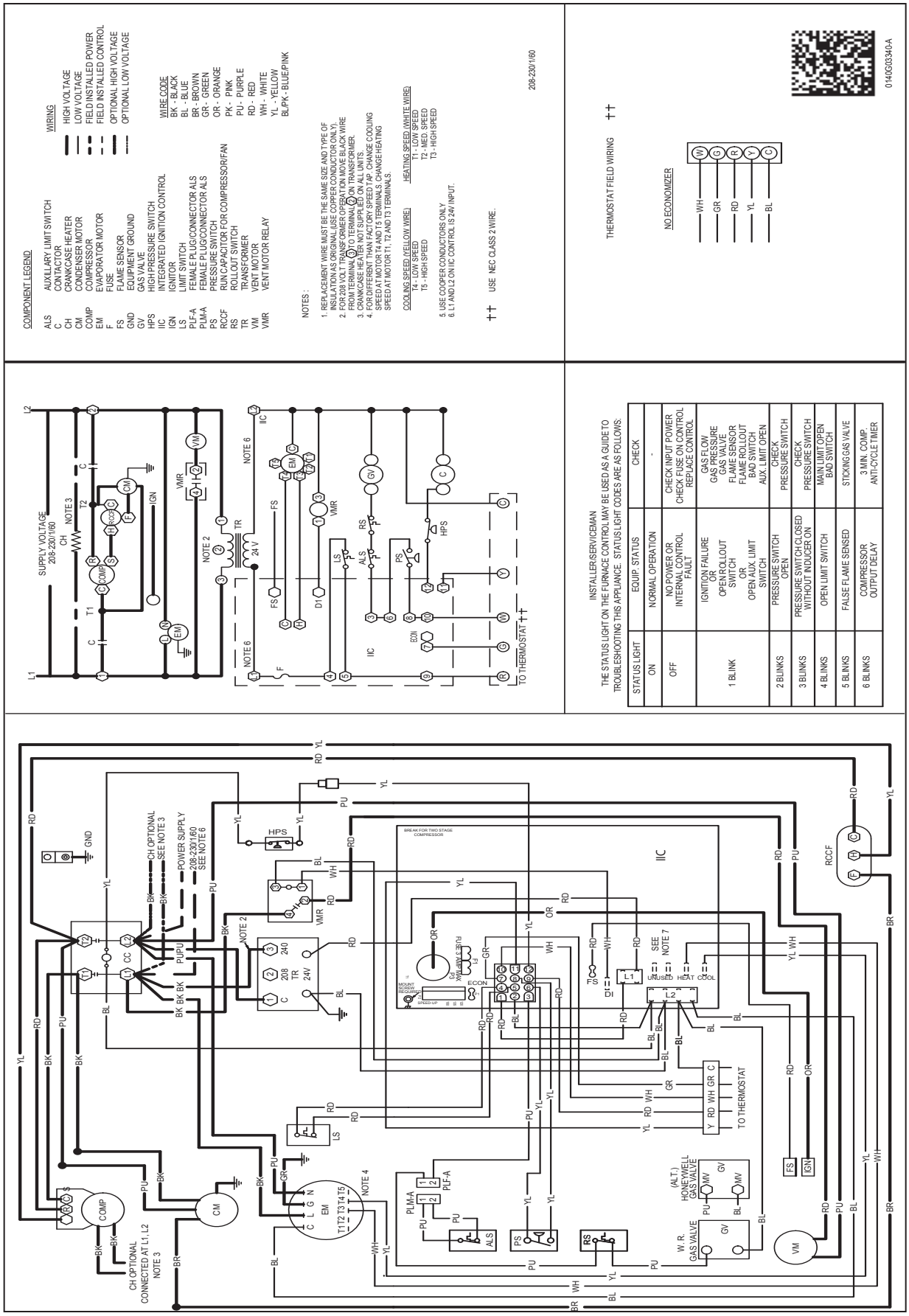

Wiring is subject to change. Always refer to the wiring diagram on the unit for the most up-to-date wiring.

WARNING

High Voltage: Disconnect all power before servicing or installing this unit. Multiple power sources may be present. Failure to do so may cause property damage, personal injury, or death.

COMPONENT LEGEND

ALS	AUXILLARY LIMIT SWITCH
COMP	COMPRESSOR
CM	CONDENSER MOTOR
C	CONTACTOR
CH	CRANKCASE HEATER
EM	EVAPORATOR MOTOR
F	FUSE
FS	FLAME SENSOR
GND	EQUIPMENT GROUND
GV	GAS VALVE
HPS	HIGH PRESSURE SWITCH
IIC	INTEGRATED IGNITION CONTROL
IGN	IGNITOR
LS	LIMIT SWITCH
PS	PRESSURE SWITCH
RCCF	RUN CAPACITOR FOR COMPRESSOR/FAN
RS	ROLLOUT SWITCH
TR	TRANSFORMER
VM	VENT MOTOR
VMR	VENT MOTOR RELAY

WIRING

HIGH VOLTAGE	
LOW VOLTAGE	
FIELD INSTALLED POWER	
FIELD INSTALLED CONTROL	
OPTIONAL HIGH VOLTAGE	
OPTIONAL LOW VOLTAGE	

WIRE CODE

BK - BLACK	
BL - BLUE	
BR - BROWN	
GR - GREEN	
OR - ORANGE	
PK - PINK	
PU - PURPLE	
RD - RED	
WH - WHITE	
YL - YELLOW	
BL/PK - BLUE/PINK	

NOTES :

1. REPLACEMENT WIRE MUST BE THE SAME SIZE AND TYPE OF INSULATION AS ORIGINAL (USE COPPER CONDUCTOR ONLY).
2. FOR 208 VOLT TRANSFORMER OPERATION MOVE BLACK WIRE FROM TERMINAL (1) TO TERMINAL (2) ON TRANSFORMER.
3. CRANKCASE HEATER NOT SUPPLIED ON ALL UNITS.
4. FOR DIFFERENT THAN FACTORY SPEED TAP, CHANGE COOLING SPEED AT MOTOR T4 AND T5 TERMINALS. CHANGE HEATING SPEED AT MOTOR T1, T2 AND T3 TERMINALS.
5. USE COOPER CONDUCTORS ONLY

COOLING SPEED (YELLOW WIRE)
T4 - LOW SPEED
T5 - HIGH SPEED

HEATING SPEED (WHITE WIRE)
T1 - LOW SPEED
T2 - MED. SPEED
T3 - HIGH SPEED

†† USE NEC CLASS 2 WIRE.

208-230/1/60

THERMOSTAT FIELD WIRING ††

NO ECONOMIZER

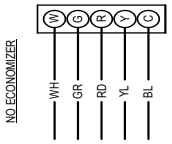

0140G04507-A

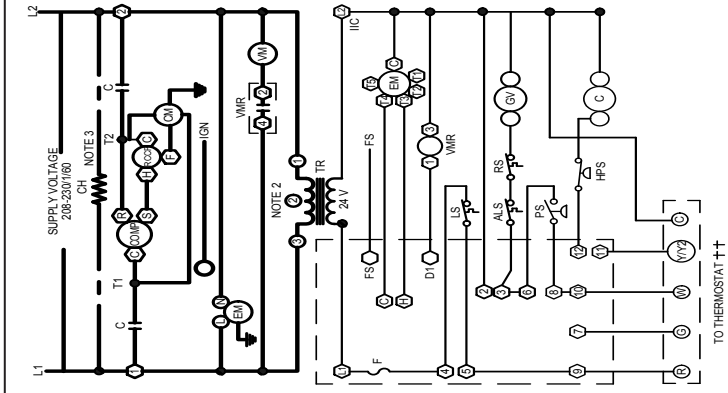

INSTALLER/SERVICEMAN

THE STATUS LIGHT ON THE FURNACE CONTROL MAY BE USED AS A GUIDE TO TROUBLESHOOTING THIS APPLIANCE. STATUS LIGHT CODES ARE AS FOLLOWS:

STATUS LIGHT	EQUIP. STATUS	CHECK
ON	NORMAL OPERATION	-
OFF	NO POWER OR INTERNAL CONTROL FAULT	CHECK INPUT POWER CHECK FUSE ON CONTROL REPLACE CONTROL
1 BLINK	IGNITION FAILURE OR OPEN ROLLOUT SWITCH OR OPEN AUX. LIMIT SWITCH	GAS FLOW GAS PRESSURE GAS VALVE FLAME SENSOR FLAME ROLLOUT BAD SWITCH AUX. LIMIT OPEN
2 BLINKS	PRESSURE SWITCH OPEN	CHECK PRESSURE SWITCH
3 BLINKS	PRESSURE SWITCH CLOSED WITHOUT INDUCER ON	CHECK PRESSURE SWITCH
4 BLINKS	OPEN LIMIT SWITCH	MAIN LIMIT OPEN BAD SWITCH
5 BLINKS	FALSE FLAME SENSED	STICKING GAS VALVE
6 BLINKS	COMPRESSOR OUTPUT DELAY	3 MIN. COMP. ANTI-CYCLE TIMER

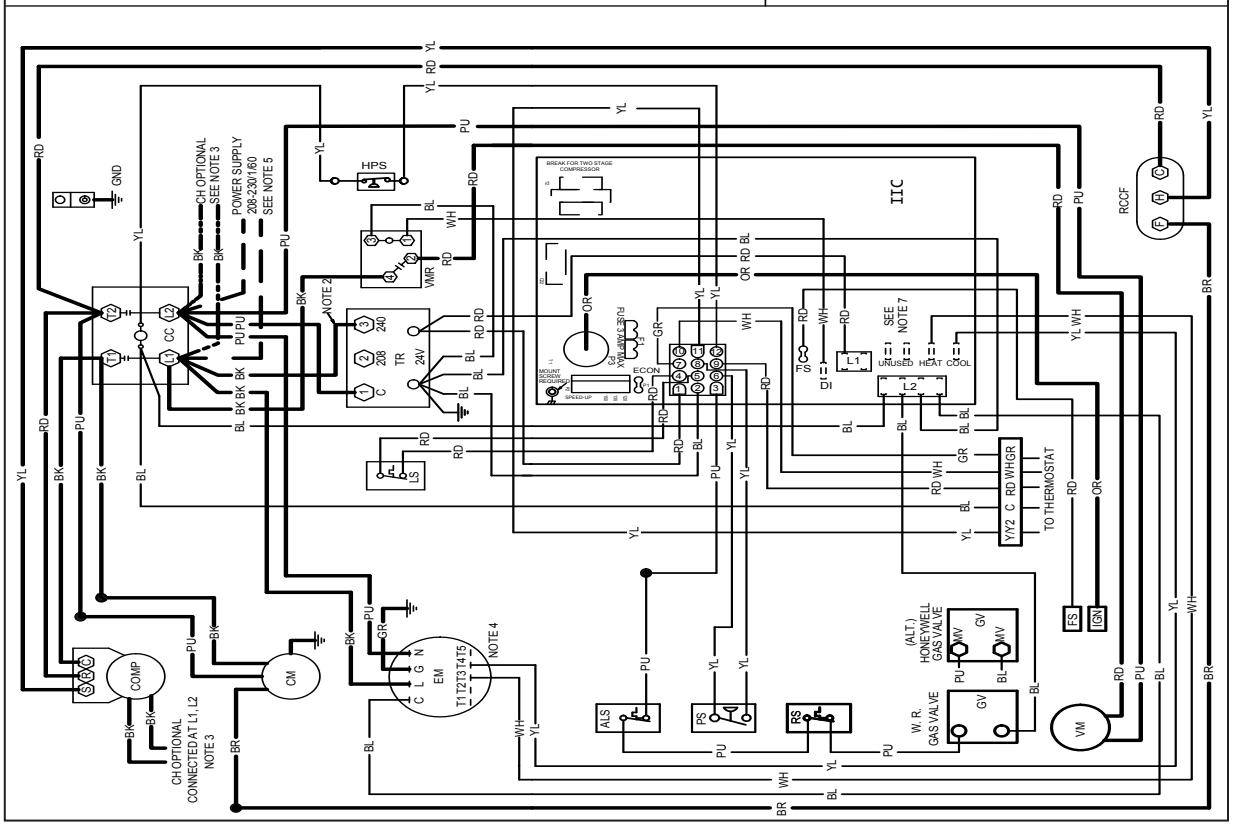

WARNING

High Voltage: Disconnect all power before servicing or installing this unit. Multiple power sources may be present. Failure to do so may cause property damage, personal injury, or death.

Wiring is subject to change. Always refer to the wiring diagram on the unit for the most up-to-date wiring.

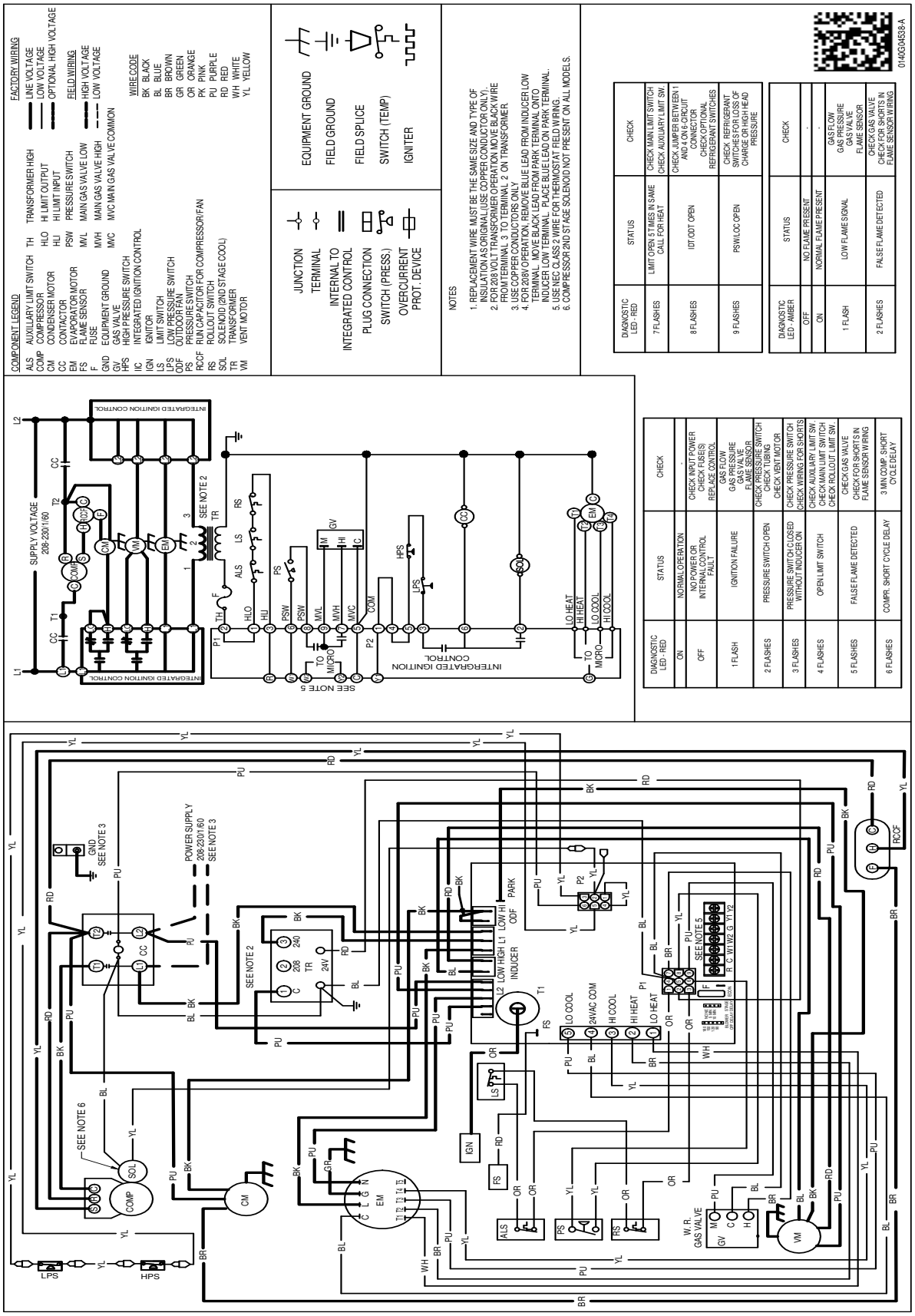

WARNING

High Voltage: Disconnect all power before servicing or installing this unit. Multiple power sources may be present. Failure to do so may cause property damage, personal injury, or death.

Wiring is subject to change. Always refer to the wiring diagram on the unit for the most up-to-date wiring.

Our continuing commitment to quality products may mean a change in specifications without notice.
©2022 **DAIKIN COMFORT TECHNOLOGIES MANUFACTURING, L.P.** • Houston, Texas • Printed in the USA.