DP14DM

Cooling Capacity: 23,200 – 45,500 BTU/h
Heating Capacity: 60,000 – 115,000 BTU/h

Packaged Dual-Fuel Units
Up to 14.5 SEER
81% AFUE / 8.0 HSPF

Contents

Nomenclature 2
Product Specifications 3
Expanded Cooling Data 4
Expanded Heating Data 14
Airflow Data 15
Dimensions 16
Wiring Diagrams 17
Accessories 19

Standard Features

- Combines cooling with heat pump and gas heating for optimal year-long performance
- High-efficiency scroll compressor
- Heavy-duty stainless-steel tubular heat exchanger
- Multi-Speed ECM indoor blower motor
- All-aluminum evaporator coil
- Copper tube / aluminum fin coil
- Two-stage gas valve; natural gas with easy conversion to propane with accessory kit
- Power-assisted combustion
- Loss-of-charge protection
- Direct spark ignition system with a microprocessor-based control for the entire ignition sequence
- All blower operation and all safety circuits complete with self-diagnostics
- This furnace does not comply with the SCAQMD Rule 1111 14 ng/J NOx emission limit and therefore is not eligible for installation in California's South Coast Air Quality Management District (SCAQMD). This furnace may be installed in SJVAPCD until 4/1/2022 provided the date of manufacture is September 30, 2021 or earlier and the emission fees are paid.
- All models comply with California Low NOx standards.
- AHRI Certified; ETL Listed

Cabinet Features

- Fully insulated heavy-gauge, zinc-coated steel cabinet with UV-resistant powder-paint finish
- Compressor sound blanket
- Louvered metal panel condenser coil protection
- Aluminum foil-facing internal insulation reinforced with fiberglass scrim
- Horizontal or downflow application
- Convenient access panels
- One roof curb fits all units
- Bottom, 2" high base rails for easy handling
- All models fit a standard-size pick-up truck
- When properly anchored, meets the 2017 Florida Building Code unit integrity requirements for hurricane-type winds (Anchor bracket kits available.)

* Complete warranty details available from your local dealer or at www.daikincomfort.com. To receive the Lifetime Heat Exchanger Limited Warranty (good for as long as you own your home), the 6-Year Unit Replacement Limited Warranty and 12-Year Parts Limited Warranty, online registration must be completed within 60 days of installation. Additional requirements for annual maintenance are required for the Unit Replacement Limited Warranty. Online registration and some of the additional requirements are not required in California or Québec.

D	P	14	D	M	24	060	4	1	AA
1	2	3,4	5	6	7,8	9,10,11	12	13	14,15

Brand

D - Daikin

Product Type

P - Packaged

SEER

14 - Up to 14 SEER

15 - Up to 15 SEER

16 - Up to 16 SEER

Unit Type

G - Gas/Electric

D - Dual Fuel

Configuration

M - Multi-position

Engineering

Minor revision

Voltage

1 - 208/230V single-phase, 60 Hz

Refrigerant

4 - R-410A

Nominal Heat Input

040	40 MBTU/H	080	80 MBTU/H	100	100 MBTU/H
060	60 MBTU/H			120	120 MBTU/H

Tonnage Nominal

24 - 2 tons	42 - 3½ tons
30 - 2½ tons	48 - 4 tons
36 - 3 tons	60 - 5 tons

	DP14DM 2406041A*	DP14DM 3008041A*	DP14DM 3608041A*	DP14DM 4210041A*	DP14DM 4810041A*
COOLING					
Cooling Capacity, BTU/hr	23,800	28,000	34,000	41,500	45,500
Sensible Capacity, BTU/hr	19,300	23,000	24,400	32,000	34,600
SEER / EER	14.5 / 12.0	14.0 / 12.0	14.0 / 11.5	14.0 / 12.0	14.0 / 12.0
Decibels	76	76	76	76	76
AHRI #'S	8032971	8032972	8032973	8032974	8032975
HEATING					
Heating Capacity, BTU/hr (47°F / 17°F)	23,800 / 13,000	28,000 / 16,000	34,000 / 19,800	40.000 / 24,000	44,000 / 24,600
C.O.P. (47°F / 17°F)	3.6 / 2.3	3.6 / 2.3	3.6 / 2.4	3.6 / 2.4	3.6 / 2.4
HSPF	8.0	8.0	8.0	8.0	8.0
GAS HEATING					
High-Fire Input/Output (BTU/hr)	60,000 / 49,000	80,000 / 65,000	80,000 / 65,000	100,000 / 81,000	100,000 / 81,000
Low-Fire Input/Output (BTU/hr)	45,000 / 36,000	60,000 / 49,000	60,000 / 49,000	75,000 / 61,000	75,000 / 61,000
AFUE (%)	81	81	81	81	81
Temperature Rise Range (°F)	35 - 65	35 - 65	35 - 65	35 - 65	35 - 65
# of Burners	3	4	4	5	5
Orifice Size (Natural / LP)	45 / 1.25MM	45 / 1.25MM	45 / 1.25MM	45 / 1.25MM	45 / 1.25MM
Primary/Auxiliary Limit Setting (°F)	160/150	150/150	150/150	170/150	170/150
Roll-out Limit Setting (°F)	300	350	350	350	350
EVAPORATOR COIL					
Face Area (ft^2)	4.3	4.3	4.3	5.7	5.7
# Rows / Fins per Inch	3 / 16	3 / 16	4 / 14	4 / 14	4 / 14
Expansion Device (Orifice Diameter in.)	0.06	0.07	0.07	0.07	0.08
Filter Size (ft^2) / Drain Size (NPT)	2.7 / ¾	4.2 / ¾	4.2 / ¾	5.1 / ¾	5.1 / ¾
Refrigerant Charge - R-410A (oz)	120	108	124	206	185
EVAPORATOR MOTOR					
Wheel (D x W)	10” x 8”	10” x 9”	10” x 9”	11” x 10”	11” x 10”
Type / # of Speeds	EEM / 5	EEM / 5	EEM / 5	EEM / 5	EEM / 5
Motor Horsepower / FLA	½ / 4.1	½ / 1.86	½ / 1.86	¾ / 2.87	¾ / 2.87
Motor Speed Tap (Cooling and Heat Pump)	T4	T4	T4	T4	T4
RPM (Cooling and Heat Pump)	755	810	880	880	950
Nominal CFM (Cooling and Heat Pump)	850	1,030	1,200	1,370	1,300
CONDENSER COIL					
Face Area (ft^2)	12.2	12.2	12.2	15.3	15.3
# Rows / Fins per Inch	2 / 16	2 / 16	2 / 16	2 / 16	2 / 16
Expansion Device (Orifice Diameter in.)	0.05	0.05	0.06	0.06	0.06
CONDENSER MOTOR / FAN					
Fan Diameter / # of Blades	22” / 3	22” / 3	22” / 3	22” / 3	22” / 3
Outdoor Nominal CFM	2,100	2,500	2,500	3,150	3,200
Motor Horsepower - RPM	1/6 - 815	1/4 - 837	1/4 - 837	1/4 - 1094	1/4 - 1094
Motor FLA	1.1	1.5	1.5	1.4	1.4
COMPRESSOR					
Type / Stage	Scroll / Single	Scroll / Single	Scroll / Single	Scroll / Single	Scroll / Single
Run Load Amps / Locked Rotor Amps	12.8 / 58.3	14.1 / 73.0	16.6 / 79.0	17.9 / 112.0	19.8 / 109.0
ELECTRICAL SPECIFICATIONS					
Voltage / Phase (60 Hz)	208-230/1	208-230/1	208-230/1	208-230/1	208-230/1
Total Unit Amps	18.0	17.5	20.0	22.2	24.1
Minimum Circuit Ampacity	21.2	21	24.2	26.7	29.1
Maximum Overcurrent Protection	30	35	40	40	45
Entrance Size Power Supply	1 1/8	1 1/8	1 1/8	1 1/8	1 1/8
Entrance Size Control Voltage	7/8	7/8	7/8	7/8	7/8
OPERATING / SHIPPING WEIGHT (LBS)	420 / 440	420 / 440	440 / 460	525 / 545	525 / 545

[1] Wire size should be determined in accordance with National Electrical Codes. Extensive wire runs will require larger wire sizes.
[2] May use fuses or HACR-type circuit breakers of the same size as noted.
Note: Always check the S&R plate for electrical data on the unit being installed.

			Outdoor Ambient Temperature																							
			65ºF				75ºF				85ºF				95ºF				105ºF				115ºF			
			Entering Indoor Wet Bulb Temperature																							
IDB	Airflow		59	63	67	71	59	63	67	71	59	63	67	71	59	63	67	71	59	63	67	71	59	63	67	71
70	955	MBh	24.1	25.0	27.4	-	23.5	24.4	26.7	-	23.0	23.8	26.1	-	22.4	23.2	25.5	-	21.3	22.1	24.2	-	19.7	20.5	22.4	-
		S/T	0.82	0.68	0.47	-	0.85	0.71	0.49	-	0.87	0.73	0.50	-	0.90	0.75	0.52	-	0.93	0.78	0.54	-	0.94	0.78	0.54	-
		ΔT	19	16	12	-	19	17	13	-	19	17	13	-	19	17	13	-	19	17	13	-	18	15	12	-
		kW	1.56	1.59	1.64	-	1.68	1.72	1.78	-	1.79	1.83	1.89	-	1.89	1.93	2.00	-	1.97	2.02	2.08	-	2.04	2.09	2.16	-
		Amps	6.5	6.6	6.8	-	6.9	7.1	7.3	-	7.5	7.7	7.9	-	8.0	8.2	8.4	-	8.5	8.7	8.9	-	8.9	9.2	9.4	-
		HI PR	232	250	264	-	260	280	296	-	296	319	336	-	337	363	383	-	379	408	431	-	419	451	476	-
		LO PR	111	118	129	-	117	125	136	-	122	130	141	-	128	136	149	-	134	143	156	-	139	148	161	-
	850	MBh	23.4	24.3	26.6	-	22.9	23.7	26.0	-	22.3	23.1	25.3	-	21.8	22.6	24.7	-	20.7	21.4	23.5	-	19.2	19.9	21.8	-
		S/T	0.78	0.65	0.45	-	0.81	0.67	0.47	-	0.83	0.69	0.48	-	0.86	0.71	0.49	-	0.89	0.74	0.51	-	0.90	0.75	0.52	-
		ΔT	20	17	13	-	20	17	13	-	20	17	13	-	20	17	13	-	20	17	13	-	19	16	12	-
		kW	1.54	1.58	1.63	-	1.67	1.71	1.76	-	1.78	1.82	1.88	-	1.87	1.91	1.98	-	1.95	2.00	2.07	-	2.02	2.07	2.14	-
		Amps	6.4	6.5	6.7	-	6.9	7.0	7.3	-	7.4	7.6	7.8	-	7.9	8.1	8.4	-	8.4	8.6	8.9	-	8.9	9.1	9.4	-
		HI PR	230	247	261	-	258	277	293	-	293	315	333	-	334	359	379	-	376	404	427	-	415	446	471	-
		LO PR	110	117	128	-	116	123	135	-	121	128	140	-	127	135	147	-	133	141	154	-	137	146	159	-
	745	MBh	21.6	22.4	24.5	-	21.1	21.9	24.0	-	20.6	21.3	23.4	-	20.1	20.8	22.8	-	19.1	19.8	21.7	-	17.7	18.3	20.1	-
		S/T	0.75	0.63	0.43	-	0.78	0.65	0.45	-	0.80	0.67	0.46	-	0.82	0.69	0.48	-	0.86	0.71	0.50	-	0.86	0.72	0.50	-
		ΔT	20	17	13	-	20	18	13	-	20	18	13	-	20	18	13	-	20	17	13	-	19	16	12	-
		kW	1.51	1.54	1.59	-	1.63	1.66	1.72	-	1.73	1.77	1.83	-	1.82	1.87	1.93	-	1.90	1.95	2.01	-	1.97	2.02	2.09	-
		Amps	6.2	6.4	6.6	-	6.7	6.9	7.1	-	7.2	7.4	7.6	-	7.7	7.9	8.1	-	8.2	8.4	8.6	-	8.6	8.8	9.1	-
		HI PR	223	240	253	-	250	269	284	-	284	306	323	-	324	348	368	-	364	392	414	-	402	433	457	-
		LO PR	107	113	124	-	113	120	131	-	117	124	136	-	123	131	143	-	129	137	150	-	133	142	155	-
75	955	MBh	24.5	25.2	27.3	29.3	23.9	24.7	26.7	28.6	23.4	24.1	26.1	28.0	22.8	23.5	25.4	27.3	21.7	22.3	24.1	25.9	20.1	20.7	22.4	24.0
		S/T	0.93	0.83	0.63	0.40	0.96	0.86	0.65	0.42	0.99	0.88	0.67	0.43	1.00	0.91	0.69	0.44	1.00	0.95	0.72	0.46	1.00	0.95	0.72	0.46
		ΔT	22	20	17	11	22	20	17	12	22	20	17	12	22	21	17	12	21	20	17	11	19	19	16	11
		kW	1.57	1.61	1.66	1.71	1.70	1.73	1.79	1.85	1.81	1.85	1.91	1.98	1.90	1.95	2.01	2.08	1.99	2.03	2.10	2.18	2.06	2.11	2.18	2.26
		Amps	6.5	6.7	6.9	7.1	7.0	7.2	7.4	7.6	7.6	7.7	8.0	8.3	8.1	8.2	8.5	8.8	8.5	8.7	9.0	9.3	9.0	9.2	9.5	9.9
		HI PR	234	252	266	278	263	283	299	312	299	322	340	354	341	366	387	404	383	412	435	454	423	456	481	502
		LO PR	112	119	130	139	118	126	137	146	123	131	143	152	129	137	150	160	135	144	157	168	140	149	163	173
	850	MBh	23.8	24.5	26.5	28.5	23.2	23.9	25.9	27.8	22.7	23.4	25.3	27.1	22.1	**22.8**	24.7	26.5	21.0	21.7	23.4	25.2	19.5	20.1	21.7	23.3
		S/T	0.89	0.79	0.60	0.39	0.92	0.82	0.62	0.40	0.94	0.84	0.64	0.41	0.97	**0.87**	0.66	0.42	1.00	0.90	0.68	0.44	1.00	0.91	0.69	0.44
		ΔT	23	21	17	12	23	21	17	12	23	21	17	12	23	**21**	18	12	23	21	17	12	21	20	16	11
		kW	1.56	1.59	1.64	1.70	1.68	1.72	1.78	1.84	1.79	1.83	1.89	1.96	1.89	**1.93**	2.00	2.07	1.97	2.02	2.08	2.16	2.04	2.09	2.16	2.24
		Amps	6.5	6.6	6.8	7.0	6.9	7.1	7.3	7.6	7.5	7.7	7.9	8.2	8.0	**8.2**	8.4	8.7	8.5	8.7	8.9	9.3	8.9	9.2	9.4	9.8
		HI PR	232	250	264	275	260	280	296	309	296	319	336	351	337	**363**	383	400	379	408	431	450	419	451	476	497
		LO PR	111	118	129	137	117	125	136	145	122	130	141	151	128	**136**	149	158	134	143	156	166	139	148	161	172
	745	MBh	22.0	22.6	24.5	26.3	21.5	22.1	23.9	25.7	20.9	21.6	23.3	25.1	20.4	21.0	22.8	24.4	19.4	20.0	21.6	23.2	18.0	18.5	20.0	21.5
		S/T	0.85	0.76	0.58	0.37	0.89	0.79	0.60	0.39	0.91	0.81	0.61	0.40	0.94	0.84	0.63	0.41	0.97	0.87	0.66	0.42	0.98	0.88	0.66	0.43
		ΔT	23	21	17	12	23	22	18	12	23	22	18	12	24	22	18	12	23	21	18	12	22	20	16	11
		kW	1.52	1.55	1.60	1.66	1.64	1.68	1.73	1.79	1.75	1.79	1.85	1.91	1.84	1.88	1.95	2.01	1.92	1.96	2.03	2.10	1.99	2.03	2.10	2.18
		Amps	6.3	6.4	6.6	6.9	6.8	6.9	7.1	7.4	7.3	7.5	7.7	8.0	7.8	8.0	8.2	8.5	8.2	8.4	8.7	9.0	8.7	8.9	9.2	9.5
		HI PR	225	242	256	267	253	272	287	299	287	309	326	340	327	352	372	388	368	396	418	436	407	438	462	482
		LO PR	108	114	125	133	114	121	132	141	118	126	137	146	124	132	144	154	130	138	151	161	135	143	156	166

IDB: Entering Indoor Dry Bulb Temperature

Shaded area reflects ACCA (TVA) conditions

kW = Total system power

High and low pressures are measured at the liquid and suction access fittings.

Amps = outdoor unit amps (comp.+fan)

Expanded Cooling Data — DP14DM24***41A* (cont.)

			Outdoor Ambient Temperature																							
			65ºF				75ºF				85ºF				95ºF				105ºF				115ºF			
			Entering Indoor Wet Bulb Temperature																							
IDB	Airflow		59	63	67	71	59	63	67	71	59	63	67	71	59	63	67	71	59	63	67	71	59	63	67	71
80	955	MBh	25.0	25.5	27.2	29.1	24.4	24.9	26.6	28.4	23.8	24.3	26.0	27.8	23.2	23.7	25.3	27.1	22.1	22.5	24.1	25.7	20.4	20.9	22.3	23.8
		S/T	1.00	0.96	0.78	0.58	1.00	1.00	0.81	0.60	1.00	1.00	0.83	0.62	1.00	1.00	0.85	0.64	1.00	1.00	0.89	0.66	1.00	1.00	0.89	0.67
		ΔT	24	23	20	16	23	24	21	16	23	23	21	17	22	23	21	17	21	22	21	16	20	20	19	15
		kW	1.58	1.62	1.67	1.73	1.71	1.75	1.81	1.87	1.82	1.86	1.93	1.99	1.92	1.97	2.03	2.10	2.01	2.05	2.12	2.20	2.08	2.13	2.20	2.28
		Amps	6.6	6.7	6.9	7.2	7.1	7.2	7.4	7.7	7.6	7.8	8.0	8.3	8.1	8.3	8.6	8.9	8.6	8.8	9.1	9.4	9.1	9.3	9.6	10.0
		HI PR	237	255	269	281	266	286	302	315	302	325	343	358	344	370	391	408	387	416	440	459	428	460	486	507
		LO PR	113	120	131	140	120	127	139	148	124	132	144	154	131	139	152	161	137	146	159	169	141	151	164	175
	850	MBh	24.2	24.8	26.4	28.3	23.7	24.2	25.8	27.6	23.1	23.6	25.2	27.0	22.5	23.0	**24.6**	26.3	21.4	21.9	23.4	25.0	19.8	20.3	21.6	23.1
		S/T	0.97	0.91	0.74	0.55	1.00	0.94	0.77	0.57	1.00	0.97	0.79	0.59	1.00	1.00	**0.81**	0.61	1.00	1.00	0.84	0.63	1.00	1.00	0.85	0.64
		ΔT	25	24	21	17	26	25	21	17	25	25	22	17	24	25	**22**	17	23	24	21	17	21	22	20	16
		kW	1.57	1.61	1.66	1.71	1.70	1.73	1.79	1.85	1.81	1.85	1.91	1.98	1.90	1.95	**2.01**	2.08	1.99	2.03	2.10	2.18	2.06	2.11	2.18	2.26
		Amps	6.5	6.7	6.9	7.1	7.0	7.2	7.4	7.6	7.6	7.7	8.0	8.3	8.1	8.2	**8.5**	8.8	8.5	8.7	9.0	9.3	9.0	9.2	9.5	9.9
		HI PR	234	252	266	278	263	283	299	312	299	322	340	354	341	367	**387**	404	383	412	435	454	423	456	481	502
		LO PR	112	119	130	139	118	126	137	146	123	131	143	152	129	137	**150**	160	135	144	157	168	140	149	163	173
	745	MBh	22.4	22.8	24.4	26.1	21.8	22.3	23.8	25.5	21.3	21.8	23.3	24.9	20.8	21.3	22.7	24.3	19.8	20.2	21.6	23.1	18.3	18.7	20.0	21.4
		S/T	0.94	0.88	0.72	0.53	0.97	0.91	0.74	0.55	1.00	0.93	0.76	0.57	1.03	0.96	0.78	0.59	1.07	1.00	0.81	0.61	1.08	1.01	0.82	0.61
		ΔT	26	25	22	17	26	25	22	17	26	25	22	17	26	25	22	18	26	25	22	17	24	23	20	16
		kW	1.53	1.57	1.62	1.67	1.65	1.69	1.75	1.81	1.76	1.80	1.86	1.92	1.86	1.90	1.96	2.03	1.94	1.98	2.05	2.12	2.01	2.05	2.12	2.20
		Amps	6.3	6.5	6.7	6.9	6.8	7.0	7.2	7.4	7.4	7.5	7.8	8.0	7.8	8.0	8.3	8.6	8.3	8.5	8.8	9.1	8.8	9.0	9.3	9.6
		HI PR	227	245	258	269	255	274	290	302	290	312	330	344	330	356	375	392	372	400	422	441	411	442	467	487
		LO PR	109	116	126	134	115	122	133	142	119	127	139	148	125	133	146	155	131	140	153	163	136	145	158	168
85	955	MBh	25.4	25.9	27.1	28.9	24.8	25.3	26.5	28.2	24.2	24.7	25.8	27.6	23.6	24.1	25.2	26.9	22.4	22.9	24.0	25.6	20.8	21.2	22.2	23.7
		S/T	1.00	1.00	0.93	0.75	1.00	1.00	0.96	0.78	1.00	1.00	0.99	0.80	1.00	1.00	1.00	0.83	1.00	1.00	1.00	0.86	1.00	1.00	1.00	0.87
		ΔT	24	25	24	21	24	24	25	21	23	24	25	21	23	23	24	21	22	22	23	21	20	20	21	20
		kW	1.60	1.63	1.69	1.74	1.72	1.76	1.82	1.88	1.84	1.88	1.94	2.01	1.94	1.98	2.05	2.12	2.02	2.07	2.14	2.21	2.10	2.14	2.22	2.30
		Amps	6.6	6.8	7.0	7.2	7.1	7.3	7.5	7.8	7.7	7.9	8.1	8.4	8.2	8.4	8.6	9.0	8.7	8.9	9.2	9.5	9.2	9.4	9.7	10.1
		HI PR	239	257	272	283	268	289	305	318	305	328	347	362	347	374	395	412	391	421	444	463	432	465	491	512
		LO PR	114	122	133	141	121	128	140	149	126	134	146	155	132	140	153	163	138	147	160	171	143	152	166	177
	850	MBh	24.6	25.1	26.3	28.1	24.1	24.5	25.7	27.4	23.5	24.0	25.1	26.8	22.9	23.4	24.5	26.1	21.8	22.2	23.3	24.8	20.2	20.6	21.5	23.0
		S/T	1.00	0.98	0.89	0.72	1.00	1.00	0.92	0.75	1.00	1.00	0.94	0.77	1.00	1.00	0.97	0.79	1.00	1.00	1.00	0.82	1.00	1.00	1.00	0.83
		ΔT	27	27	25	22	26	27	26	22	25	26	26	22	25	25	26	22	24	24	25	22	22	22	23	21
		kW	1.58	1.62	1.67	1.73	1.71	1.75	1.81	1.87	1.82	1.86	1.93	1.99	1.92	1.97	2.03	2.10	2.01	2.05	2.12	2.20	2.08	2.13	2.20	2.28
		Amps	6.6	6.7	6.9	7.2	7.1	7.2	7.4	7.7	7.6	7.8	8.0	8.3	8.1	8.3	8.6	8.9	8.6	8.8	9.1	9.4	9.1	9.3	9.6	10.0
		HI PR	237	255	269	281	266	286	302	315	302	325	343	358	344	370	391	408	387	416	440	459	428	460	486	507
		LO PR	113	120	131	140	120	127	139	148	124	132	144	154	131	139	152	161	137	146	159	169	141	151	164	175
	745	MBh	22.8	23.2	24.3	25.9	22.2	22.7	23.7	25.3	21.7	22.1	23.2	24.7	21.2	21.6	22.6	24.1	20.1	20.5	21.5	22.9	18.6	19.0	19.9	21.2
		S/T	0.98	0.95	0.86	0.69	1.00	0.98	0.89	0.72	1.00	1.00	0.91	0.74	1.00	1.00	0.94	0.76	1.00	1.00	0.97	0.79	1.00	1.00	0.98	0.80
		ΔT	28	27	26	22	27	27	26	22	27	27	26	22	26	27	26	23	25	25	26	22	23	23	24	21
		kW	1.54	1.58	1.63	1.68	1.67	1.70	1.76	1.82	1.78	1.82	1.88	1.94	1.87	1.91	1.98	2.05	1.95	2.00	2.07	2.14	2.02	2.07	2.14	2.22
		Amps	6.4	6.5	6.7	7.0	6.9	7.0	7.3	7.5	7.4	7.6	7.8	8.1	7.9	8.1	8.3	8.6	8.4	8.6	8.9	9.2	8.9	9.1	9.4	9.7
		HI PR	230	247	261	272	258	277	293	305	293	315	333	347	334	359	379	395	375	404	427	445	415	446	471	492
		LO PR	110	117	127	136	116	123	135	143	121	128	140	149	127	135	147	157	133	141	154	164	137	146	159	170

IDB: Entering Indoor Dry Bulb Temperature

High and low pressures are measured at the liquid and suction access fittings.

Shaded area reflects AHRI conditions

kW = Total system power

Amps = outdoor unit amps (comp.+fan)

			Outdoor Ambient Temperature																							
			65ºF				75ºF				85ºF				95ºF				105ºF				115ºF			
			Entering Indoor Wet Bulb Temperature																							
IDB	Airflow		59	63	67	71	59	63	67	71	59	63	67	71	59	63	67	71	59	63	67	71	59	63	67	71
70	1170	MBh	28.0	29.0	31.8	-	27.3	28.3	31.0	-	26.7	27.6	30.3	-	26.0	27.0	29.6	-	24.7	25.6	28.1	-	22.9	23.7	26.0	-
		S/T	0.82	0.69	0.48	-	0.85	0.71	0.49	-	0.88	0.73	0.51	-	0.90	0.76	0.52	-	0.94	0.78	0.54	-	0.95	0.79	0.55	-
		ΔT	18	16	12	-	18	16	12	-	18	16	12	-	18	16	12	-	18	16	12	-	17	15	11	-
		kW	1.87	1.90	1.96	-	2.01	2.05	2.11	-	2.13	2.18	2.25	-	2.24	2.29	2.37	-	2.34	2.39	2.47	-	2.42	2.47	2.55	-
		Amps	8.2	8.4	8.6	-	8.8	8.9	9.2	-	9.4	9.6	9.9	-	10.0	10.2	10.5	-	10.5	10.7	11.0	-	11.0	11.3	11.6	-
		HI PR	225	242	256	-	253	272	287	-	287	309	326	-	327	352	372	-	368	396	418	-	407	438	462	-
		LO PR	111	118	129	-	117	124	136	-	122	129	141	-	128	136	148	-	134	142	155	-	138	147	161	-
	1040	MBh	27.2	28.2	30.8	-	26.5	27.5	30.1	-	25.9	26.8	29.4	-	25.3	26.2	28.7	-	24.0	24.9	27.3	-	22.2	23.0	25.2	-
		S/T	0.79	0.66	0.45	-	0.81	0.68	0.47	-	0.84	0.70	0.48	-	0.86	0.72	0.50	-	0.89	0.75	0.52	-	0.90	0.75	0.52	-
		ΔT	19	16	12	-	19	17	13	-	19	17	13	-	19	17	13	-	19	16	12	-	18	15	12	-
		kW	1.85	1.89	1.95	-	1.99	2.03	2.10	-	2.12	2.16	2.23	-	2.22	2.27	2.35	-	2.32	2.37	2.45	-	2.40	2.45	2.53	-
		Amps	8.2	8.3	8.5	-	8.7	8.9	9.1	-	9.3	9.5	9.8	-	9.9	10.1	10.4	-	10.4	10.6	10.9	-	11.0	11.2	11.5	-
		HI PR	223	240	253	-	250	269	284	-	284	306	323	-	324	349	368	-	365	392	414	-	403	433	458	-
		LO PR	110	117	127	-	116	123	135	-	120	128	140	-	126	135	147	-	133	141	154	-	137	146	159	-
	910	MBh	25.1	26.0	28.5	-	24.5	25.4	27.8	-	23.9	24.8	27.1	-	23.3	24.2	26.5	-	22.2	23.0	25.2	-	20.5	21.3	23.3	-
		S/T	0.76	0.63	0.44	-	0.79	0.66	0.45	-	0.81	0.67	0.47	-	0.83	0.69	0.48	-	0.86	0.72	0.50	-	0.87	0.73	0.50	-
		ΔT	19	17	13	-	19	17	13	-	19	17	13	-	20	17	13	-	19	17	13	-	18	16	12	-
		kW	1.81	1.85	1.90	-	1.94	1.98	2.05	-	2.06	2.11	2.18	-	2.17	2.22	2.29	-	2.26	2.31	2.38	-	2.34	2.39	2.47	-
		Amps	8.0	8.1	8.4	-	8.5	8.7	8.9	-	9.1	9.3	9.6	-	9.6	9.8	10.1	-	10.2	10.4	10.7	-	10.7	10.9	11.2	-
		HI PR	216	233	246	-	243	261	276	-	276	297	314	-	314	338	357	-	354	380	402	-	391	420	444	-
		LO PR	106	113	124	-	112	120	131	-	117	124	136	-	123	131	142	-	129	137	149	-	133	141	154	-
75	1170	MBh	28.4	29.3	31.7	34.0	27.8	28.6	31.0	33.2	27.1	27.9	30.2	32.4	26.5	27.2	29.5	31.7	25.1	25.9	28.0	30.1	23.3	24.0	26.0	27.9
		S/T	0.94	0.84	0.63	0.41	0.97	0.87	0.66	0.42	1.00	0.89	0.67	0.43	1.00	0.92	0.70	0.45	1.00	0.95	0.72	0.46	1.00	0.96	0.73	0.47
		ΔT	21	19	16	11	21	20	16	11	21	20	16	11	21	20	16	11	20	19	16	11	18	18	15	10
		kW	1.88	1.92	1.98	2.04	2.02	2.07	2.13	2.20	2.15	2.20	2.27	2.34	2.26	2.31	2.39	2.47	2.36	2.41	2.49	2.57	2.44	2.49	2.57	2.66
		Amps	8.3	8.4	8.7	8.9	8.8	9.0	9.3	9.6	9.5	9.7	9.9	10.3	10.0	10.2	10.5	10.9	10.6	10.8	11.1	11.5	11.1	11.4	11.7	12.1
		HI PR	227	245	258	270	255	275	290	302	290	312	330	344	331	356	376	392	372	400	423	441	411	442	467	487
		LO PR	112	119	130	138	118	126	137	146	123	131	143	152	129	137	150	160	135	144	157	167	140	149	162	173
	1040	MBh	27.6	28.4	30.8	33.0	27.0	27.8	30.1	32.3	26.3	27.1	29.3	31.5	25.7	**26.5**	28.6	30.7	24.4	25.1	27.2	29.2	22.6	23.3	25.2	27.0
		S/T	0.89	0.80	0.60	0.39	0.93	0.83	0.63	0.40	0.95	0.85	0.64	0.41	0.98	**0.88**	0.66	0.43	1.00	0.91	0.69	0.44	1.00	0.92	0.69	0.45
		ΔT	22	20	16	11	22	20	17	12	22	20	17	12	22	**20**	17	12	22	20	17	11	20	19	15	11
		kW	1.87	1.90	1.96	2.03	2.01	2.05	2.12	2.18	2.13	2.18	2.25	2.32	2.24	**2.29**	2.37	2.44	2.34	2.39	2.47	2.55	2.42	2.47	2.55	2.64
		Amps	8.2	8.4	8.6	8.9	8.8	8.9	9.2	9.5	9.4	9.6	9.9	10.2	10.0	**10.2**	10.5	10.8	10.5	10.7	11.0	11.4	11.0	11.3	11.6	12.0
		HI PR	225	242	256	267	253	272	287	299	287	309	327	341	327	**352**	372	388	368	396	418	436	407	438	462	482
		LO PR	111	118	129	137	117	125	136	145	122	129	141	150	128	**136**	148	158	134	142	156	166	139	147	161	171
	910	MBh	25.5	26.2	28.4	30.5	24.9	25.6	27.8	29.8	24.3	25.0	27.1	29.1	23.7	24.4	26.4	28.4	22.5	23.2	25.1	26.9	20.9	21.5	23.3	25.0
		S/T	0.86	0.77	0.58	0.38	0.89	0.80	0.60	0.39	0.92	0.82	0.62	0.40	0.94	0.85	0.64	0.41	0.98	0.88	0.66	0.43	0.99	0.88	0.67	0.43
		ΔT	22	20	17	12	22	21	17	12	22	21	17	12	23	21	17	12	22	21	17	12	21	19	16	11
		kW	1.82	1.86	1.92	1.98	1.96	2.00	2.06	2.13	2.08	2.13	2.19	2.26	2.19	2.24	2.31	2.38	2.28	2.33	2.40	2.48	2.36	2.41	2.49	2.57
		Amps	8.0	8.2	8.4	8.7	8.6	8.7	9.0	9.3	9.2	9.4	9.6	9.9	9.7	9.9	10.2	10.5	10.3	10.5	10.8	11.1	10.8	11.0	11.3	11.7
		HI PR	218	235	248	259	245	264	279	291	279	300	317	330	317	342	361	376	357	384	406	423	395	425	448	468
		LO PR	107	114	125	133	114	121	132	140	118	126	137	146	124	132	144	153	130	138	151	161	134	143	156	166

IDB: Entering Indoor Dry Bulb Temperature

Shaded area reflects ACCA (TVA) conditions

kW = Total system power

High and low pressures are measured at the liquid and suction access fittings.

Amps = outdoor unit amps (comp.+fan)

			Outdoor Ambient Temperature																							
			65ºF				75ºF				85ºF				95ºF				105ºF				115ºF			
			Entering Indoor Wet Bulb Temperature																							
IDB	Airflow		59	63	67	71	59	63	67	71	59	63	67	71	59	63	67	71	59	63	67	71	59	63	67	71
80	1170	MBh	29.0	29.6	31.6	33.8	28.3	28.9	30.9	33.0	27.6	28.2	30.1	32.2	26.9	27.5	29.4	31.4	25.6	26.1	27.9	29.9	23.7	24.2	25.9	27.7
		S/T	1.00	0.96	0.78	0.59	1.00	1.00	0.81	0.61	1.00	1.00	0.83	0.62	1.00	1.00	0.86	0.64	1.00	1.00	0.89	0.67	1.00	1.00	0.90	0.67
		ΔT	23	22	19	16	22	23	20	16	22	22	20	16	21	22	20	16	20	21	20	16	19	19	18	15
		kW	1.90	1.94	2.00	2.06	2.04	2.08	2.15	2.22	2.17	2.21	2.29	2.36	2.28	2.33	2.41	2.49	2.38	2.43	2.51	2.59	2.46	2.51	2.60	2.68
		Amps	8.3	8.5	8.7	9.0	8.9	9.1	9.3	9.6	9.6	9.7	10.0	10.4	10.1	10.3	10.6	11.0	10.7	10.9	11.2	11.6	11.2	11.5	11.8	12.2
		HI PR	230	247	261	272	258	277	293	306	293	316	333	347	334	359	379	396	376	404	427	445	415	447	472	492
		LO PR	113	120	131	140	119	127	139	148	124	132	144	154	130	139	151	161	137	145	159	169	141	150	164	175
	1040	MBh	28.1	28.7	30.7	32.8	27.5	28.1	30.0	32.0	26.8	27.4	29.3	31.3	26.2	26.7	**28.5**	30.5	24.8	25.4	27.1	29.0	23.0	23.5	25.1	26.9
		S/T	0.98	0.92	0.75	0.56	1.00	0.95	0.78	0.58	1.00	0.98	0.79	0.59	1.00	1.00	**0.82**	0.61	1.00	1.00	0.85	0.64	1.00	1.00	0.86	0.64
		ΔT	24	23	20	16	24	24	21	16	24	24	21	16	23	24	**21**	17	22	22	20	16	20	21	19	15
		kW	1.88	1.92	1.98	2.04	2.02	2.07	2.13	2.20	2.15	2.20	2.27	2.34	2.26	2.31	**2.39**	2.47	2.36	2.41	2.49	2.57	2.44	2.49	2.57	2.66
		Amps	8.3	8.4	8.7	8.9	8.8	9.0	9.3	9.6	9.5	9.7	9.9	10.3	10.0	10.2	**10.5**	10.9	10.6	10.8	11.1	11.5	11.1	11.4	11.7	12.1
		HI PR	227	245	258	270	255	275	290	303	290	312	330	344	331	356	**376**	392	372	400	423	441	411	442	467	487
		LO PR	112	119	130	138	118	126	137	146	123	131	143	152	129	137	**150**	160	135	144	157	167	140	149	162	173
	910	MBh	25.9	26.5	28.3	30.3	25.3	25.9	27.7	29.6	24.7	25.3	27.0	28.9	24.1	24.7	26.4	28.2	22.9	23.4	25.0	26.8	21.2	21.7	23.2	24.8
		S/T	0.94	0.89	0.72	0.54	0.98	0.92	0.75	0.56	1.00	0.94	0.77	0.57	1.04	0.97	0.79	0.59	1.08	1.01	0.82	0.61	1.00	1.02	0.83	0.62
		ΔT	25	24	21	16	25	24	21	17	25	24	21	17	25	24	21	17	25	24	21	17	21	22	19	15
		kW	1.84	1.87	1.93	1.99	1.98	2.02	2.08	2.15	2.10	2.14	2.21	2.28	2.21	2.25	2.33	2.40	2.30	2.35	2.42	2.51	2.38	2.43	2.51	2.59
		Amps	8.1	8.3	8.5	8.7	8.6	8.8	9.1	9.3	9.3	9.4	9.7	10.0	9.8	10.0	10.3	10.6	10.3	10.6	10.9	11.2	10.9	11.1	11.4	11.8
		HI PR	221	237	251	262	248	266	281	293	282	303	320	334	321	345	364	380	361	388	410	428	399	429	453	472
		LO PR	109	115	126	134	115	122	133	142	119	127	138	147	125	133	145	155	131	140	152	162	136	144	158	168
85	1170	MBh	29.5	30.0	31.5	33.6	28.8	29.3	30.7	32.8	28.1	28.6	30.0	32.0	27.4	27.9	29.3	31.2	26.0	26.5	27.8	29.7	24.1	24.6	25.7	27.5
		S/T	1.00	1.00	0.94	0.76	1.00	1.00	0.97	0.79	1.00	1.00	1.00	0.81	1.00	1.00	1.00	0.83	1.00	1.00	1.00	0.87	1.00	1.00	1.00	0.87
		ΔT	23	24	23	20	23	23	23	20	22	23	23	20	22	22	23	20	20	21	22	20	19	19	20	19
		kW	1.91	1.95	2.01	2.08	2.06	2.10	2.17	2.24	2.19	2.23	2.30	2.38	2.30	2.35	2.43	2.51	2.40	2.45	2.53	2.61	2.48	2.53	2.62	2.71
		Amps	8.4	8.6	8.8	9.1	9.0	9.2	9.4	9.7	9.6	9.8	10.1	10.4	10.2	10.4	10.7	11.1	10.8	11.0	11.3	11.7	11.3	11.6	11.9	12.3
		HI PR	232	250	264	275	260	280	296	309	296	319	336	351	337	363	383	400	379	408	431	450	419	451	476	497
		LO PR	114	121	133	141	121	128	140	149	125	133	146	155	132	140	153	163	138	147	160	171	143	152	166	177
	1040	MBh	28.6	29.2	30.5	32.6	27.9	28.5	29.8	31.8	27.3	27.8	29.1	31.1	26.6	27.1	28.4	30.3	25.3	25.8	27.0	28.8	23.4	23.9	25.0	26.7
		S/T	1.00	0.99	0.89	0.73	1.00	1.00	0.93	0.75	1.00	1.00	0.95	0.77	1.00	1.00	0.98	0.80	1.00	1.00	1.00	0.83	1.00	1.00	1.00	0.83
		ΔT	25	26	24	21	25	25	24	21	24	25	24	21	24	24	25	21	22	23	24	21	21	21	22	20
		kW	1.90	1.94	2.00	2.06	2.04	2.08	2.15	2.22	2.17	2.21	2.29	2.36	2.28	2.33	2.41	2.49	2.38	2.43	2.51	2.59	2.46	2.51	2.60	2.68
		Amps	8.3	8.5	8.7	9.0	8.9	9.1	9.3	9.6	9.6	9.7	10.0	10.4	10.1	10.3	10.6	11.0	10.7	10.9	11.2	11.6	11.2	11.5	11.8	12.2
		HI PR	230	247	261	272	258	277	293	306	293	316	333	347	334	359	379	396	376	404	427	445	415	447	472	492
		LO PR	113	120	131	140	119	127	139	148	124	132	144	154	130	139	151	161	137	145	159	169	141	150	164	175
	910	MBh	26.4	26.9	28.2	30.1	25.8	26.3	27.5	29.4	25.2	25.7	26.9	28.7	24.6	25.0	26.2	28.0	23.3	23.8	24.9	26.6	21.6	22.0	23.1	24.6
		S/T	0.99	0.96	0.86	0.70	1.00	0.99	0.89	0.73	1.00	1.00	0.92	0.74	1.00	1.00	0.95	0.77	1.00	1.00	0.98	0.80	1.00	1.00	0.99	0.80
		ΔT	26	26	25	21	26	26	25	22	25	26	25	22	25	25	25	22	24	24	25	21	22	22	23	20
		kW	1.85	1.89	1.95	2.01	1.99	2.03	2.10	2.17	2.11	2.16	2.23	2.30	2.22	2.27	2.35	2.42	2.32	2.37	2.45	2.53	2.40	2.45	2.53	2.62
		Amps	8.2	8.3	8.5	8.8	8.7	8.9	9.1	9.4	9.3	9.5	9.8	10.1	9.9	10.1	10.4	10.7	10.4	10.6	10.9	11.3	10.9	11.2	11.5	11.9
		HI PR	223	240	253	264	250	269	284	296	284	306	323	337	324	349	368	384	364	392	414	432	403	433	458	477
		LO PR	110	117	127	136	116	123	135	143	120	128	140	149	126	135	147	156	133	141	154	164	137	146	159	170

IDB: Entering Indoor Dry Bulb Temperature

High and low pressures are measured at the liquid and suction access fittings.

Shaded area reflects AHRI conditions

kW = Total system power

Amps = outdoor unit amps (comp.+fan)

			Outdoor Ambient Temperature																							
			65ºF				75ºF				85ºF				95ºF				105ºF				115ºF			
			Entering Indoor Wet Bulb Temperature																							
IDB	Airflow		59	63	67	71	59	63	67	71	59	63	67	71	59	63	67	71	59	63	67	71	59	63	67	71
70	1170	MBh	34.8	36.0	39.5	-	34.0	35.2	38.6	-	33.1	34.4	37.6	-	32.3	33.5	36.7	-	30.7	31.8	34.9	-	28.5	29.5	32.3	-
		S/T	0.73	0.61	0.42	-	0.75	0.63	0.44	-	0.77	0.64	0.45	-	0.80	0.66	0.46	-	0.83	0.69	0.48	-	0.83	0.70	0.48	-
		ΔT	20	17	13	-	20	17	13	-	20	17	13	-	20	18	13	-	20	17	13	-	19	16	12	-
		kW	2.32	2.37	2.45	-	2.51	2.56	2.65	-	2.67	2.73	2.82	-	2.81	2.88	2.97	-	2.93	3.00	3.10	-	3.04	3.11	3.21	-
		Amps	10.3	10.5	10.8	-	11.0	11.3	11.6	-	11.9	12.1	12.5	-	12.6	12.8	13.2	-	13.3	13.6	14.0	-	14.0	14.3	14.7	-
		HI PR	240	258	272	-	269	289	305	-	306	329	347	-	348	375	396	-	392	422	445	-	433	466	492	-
		LO PR	108	115	126	-	115	122	133	-	119	127	138	-	125	133	145	-	131	139	152	-	136	144	157	-
	1040	MBh	33.8	35.0	38.3	-	33.0	34.2	37.4	-	32.2	33.4	36.5	-	31.4	32.5	35.7	-	29.8	30.9	33.9	-	27.6	28.6	31.4	-
		S/T	0.69	0.58	0.40	-	0.72	0.60	0.41	-	0.74	0.61	0.43	-	0.76	0.63	0.44	-	0.79	0.66	0.46	-	0.79	0.66	0.46	-
		ΔT	21	18	14	-	21	18	14	-	21	18	14	-	21	18	14	-	21	18	14	-	19	17	13	-
		kW	2.30	2.35	2.43	-	2.49	2.54	2.62	-	2.65	2.71	2.80	-	2.79	2.85	2.95	-	2.91	2.97	3.08	-	3.01	3.08	3.19	-
		Amps	10.2	10.4	10.7	-	10.9	11.2	11.5	-	11.8	12.0	12.4	-	12.5	12.7	13.1	-	13.2	13.5	13.9	-	13.9	14.2	14.6	-
		HI PR	237	255	270	-	266	286	302	-	303	326	344	-	345	371	392	-	388	417	441	-	429	461	487	-
		LO PR	107	114	125	-	113	121	132	-	118	125	137	-	124	132	144	-	130	138	151	-	134	143	156	-
	910	MBh	31.2	32.3	35.4	-	30.4	31.5	34.6	-	29.7	30.8	33.7	-	29.0	30.0	32.9	-	27.5	28.5	31.3	-	25.5	26.4	29.0	-
		S/T	0.67	0.56	0.39	-	0.69	0.58	0.40	-	0.71	0.59	0.41	-	0.73	0.61	0.42	-	0.76	0.63	0.44	-	0.77	0.64	0.44	-
		ΔT	21	18	14	-	21	18	14	-	21	18	14	-	21	19	14	-	21	18	14	-	20	17	13	-
		kW	2.25	2.30	2.37	-	2.42	2.48	2.56	-	2.58	2.64	2.72	-	2.72	2.78	2.87	-	2.83	2.90	3.00	-	2.93	3.00	3.10	-
		Amps	10.0	10.2	10.5	-	10.7	10.9	11.2	-	11.5	11.7	12.1	-	12.2	12.4	12.8	-	12.9	13.1	13.5	-	13.5	13.8	14.3	-
		HI PR	230	248	261	-	258	278	293	-	294	316	334	-	334	360	380	-	376	405	428	-	416	447	472	-
		LO PR	104	111	121	-	110	117	128	-	114	122	133	-	120	128	139	-	126	134	146	-	130	138	151	-
75	1170	MBh	35.4	36.4	39.4	42.3	34.5	35.6	38.5	41.3	33.7	34.7	37.6	40.3	32.9	33.9	36.7	39.3	31.2	32.2	34.8	37.4	28.9	29.8	32.3	34.6
		S/T	0.82	0.74	0.56	0.36	0.85	0.76	0.58	0.37	0.88	0.78	0.59	0.38	0.90	0.81	0.61	0.39	0.94	0.84	0.64	0.41	0.95	0.85	0.64	0.41
		ΔT	23	21	17	12	23	21	18	12	23	21	18	12	23	22	18	12	23	21	17	12	22	20	16	11
		kW	2.34	2.39	2.47	2.55	2.53	2.58	2.67	2.76	2.69	2.75	2.84	2.94	2.84	2.90	3.00	3.10	2.96	3.03	3.13	3.24	3.06	3.14	3.24	3.35
		Amps	10.4	10.6	10.9	11.3	11.1	11.4	11.7	12.1	12.0	12.2	12.6	13.0	12.7	13.0	13.3	13.8	13.4	13.7	14.1	14.6	14.1	14.4	14.9	15.4
		HI PR	242	260	275	287	272	292	309	322	309	332	351	366	352	379	400	417	396	426	450	469	437	471	497	518
		LO PR	109	116	127	135	116	123	134	143	120	128	140	149	126	134	147	156	132	141	154	164	137	146	159	169
	1040	MBh	34.3	35.3	38.3	41.1	33.5	34.5	37.4	40.1	32.7	33.7	36.5	39.1	31.9	**32.9**	35.6	38.2	30.3	31.2	33.8	36.3	28.1	28.9	31.3	33.6
		S/T	0.79	0.70	0.53	0.34	0.82	0.73	0.55	0.36	0.84	0.75	0.57	0.36	0.86	**0.77**	0.58	0.38	0.90	0.80	0.61	0.39	0.90	0.81	0.61	0.39
		ΔT	24	22	18	12	24	22	18	13	24	22	18	13	24	**22**	18	13	24	22	18	13	22	21	17	12
		kW	2.32	2.37	2.45	2.53	2.51	2.56	2.65	2.74	2.67	2.73	2.82	2.92	2.81	**2.88**	2.97	3.07	2.93	3.00	3.10	3.21	3.04	3.11	3.21	3.33
		Amps	10.3	10.5	10.8	11.2	11.0	11.3	11.6	12.0	11.9	12.1	12.5	12.9	12.6	**12.9**	13.2	13.7	13.3	13.6	14.0	14.5	14.0	14.3	14.7	15.3
		HI PR	240	258	272	284	269	289	306	319	306	329	348	362	348	**375**	396	413	392	422	445	464	433	466	492	513
		LO PR	108	115	126	134	115	122	133	142	119	127	138	147	125	**133**	145	155	131	139	152	162	136	144	157	168
	910	MBh	31.7	32.6	35.3	37.9	30.9	31.9	34.5	37.0	30.2	31.1	33.7	36.1	29.5	30.3	32.8	35.3	28.0	28.8	31.2	33.5	25.9	26.7	28.9	31.0
		S/T	0.76	0.68	0.51	0.33	0.79	0.70	0.53	0.34	0.81	0.72	0.55	0.35	0.83	0.74	0.56	0.36	0.86	0.77	0.58	0.38	0.87	0.78	0.59	0.38
		ΔT	24	22	18	13	25	23	19	13	25	23	19	13	25	23	19	13	24	22	18	13	23	21	17	12
		kW	2.27	2.32	2.39	2.47	2.44	2.50	2.58	2.67	2.60	2.66	2.75	2.84	2.74	2.80	2.90	2.99	2.86	2.92	3.02	3.13	2.96	3.03	3.13	3.24
		Amps	10.1	10.3	10.6	10.9	10.8	11.0	11.3	11.7	11.6	11.8	12.2	12.6	12.3	12.5	12.9	13.3	13.0	13.2	13.6	14.1	13.7	14.0	14.4	14.9
		HI PR	232	250	264	276	261	281	296	309	297	319	337	352	338	364	384	400	380	409	432	450	420	452	477	498
		LO PR	105	112	122	130	111	118	129	137	115	123	134	143	121	129	141	150	127	135	148	157	131	140	153	163

IDB: Entering Indoor Dry Bulb Temperature

Shaded area reflects ACCA (TVA) conditions

kW = Total system power

High and low pressures are measured at the liquid and suction access fittings.

Amps = outdoor unit amps (comp.+fan)

			Outdoor Ambient Temperature																							
			65ºF				75ºF				85ºF				95ºF				105ºF				115ºF			
			Entering Indoor Wet Bulb Temperature																							
IDB	Airflow		59	63	67	71	59	63	67	71	59	63	67	71	59	63	67	71	59	63	67	71	59	63	67	71
80	1170	MBh	36.0	36.8	39.3	42.0	35.1	35.9	38.4	41.0	34.3	35.1	37.5	40.0	33.5	34.2	36.5	39.1	31.8	32.5	34.7	37.1	29.5	30.1	32.2	34.4
		S/T	0.90	0.85	0.69	0.52	0.94	0.88	0.72	0.53	0.96	0.90	0.73	0.55	1.00	0.93	0.76	0.57	1.00	0.97	0.79	0.59	1.00	1.00	0.79	0.59
		ΔT	26	25	21	17	26	25	22	17	26	25	22	17	26	25	22	17	25	25	21	17	23	24	20	16
		kW	2.36	2.41	2.49	2.57	2.55	2.61	2.69	2.78	2.71	2.78	2.87	2.97	2.86	2.93	3.02	3.13	2.98	3.05	3.16	3.27	3.09	3.16	3.27	3.38
		Amps	10.5	10.7	11.0	11.4	11.2	11.4	11.8	12.2	12.1	12.3	12.7	13.1	12.8	13.1	13.5	13.9	13.5	13.8	14.2	14.7	14.2	14.6	15.0	15.5
		HI PR	244	263	278	290	274	295	312	325	312	336	355	370	355	382	404	421	400	430	454	474	442	475	502	524
		LO PR	111	118	128	137	117	124	136	145	121	129	141	150	128	136	148	158	134	142	155	165	138	147	161	171
	1040	MBh	34.9	35.7	38.1	40.8	34.1	34.9	37.3	39.8	33.3	34.0	36.4	38.9	32.5	33.2	**35.5**	37.9	30.9	31.5	33.7	36.0	28.6	29.2	31.2	33.4
		S/T	0.86	0.81	0.66	0.49	0.89	0.84	0.68	0.51	0.92	0.86	0.70	0.52	0.95	0.89	**0.72**	0.54	0.98	0.92	0.75	0.56	0.99	0.93	0.76	0.57
		ΔT	27	26	22	18	27	26	22	18	27	26	23	18	27	26	**23**	18	27	26	22	18	25	24	21	17
		kW	2.34	2.39	2.47	2.55	2.53	2.58	2.67	2.76	2.69	2.75	2.84	2.94	2.84	2.90	**3.00**	3.10	2.96	3.03	3.13	3.24	3.07	3.14	3.24	3.36
		Amps	10.4	10.6	10.9	11.3	11.1	11.4	11.7	12.1	12.0	12.2	12.6	13.0	12.7	13.0	**13.3**	13.8	13.4	13.7	14.1	14.6	14.1	14.4	14.9	15.4
		HI PR	242	260	275	287	272	292	309	322	309	332	351	366	352	379	**400**	417	396	426	450	469	437	471	497	518
		LO PR	110	117	127	135	116	123	134	143	120	128	140	149	126	134	**147**	156	132	141	154	164	137	146	159	169
	910	MBh	32.2	33.0	35.2	37.6	31.5	32.2	34.4	36.8	30.7	31.4	33.6	35.9	30.0	30.7	32.7	35.0	28.5	29.1	31.1	33.3	26.4	27.0	28.8	30.8
		S/T	0.83	0.78	0.64	0.47	0.86	0.81	0.66	0.49	0.88	0.83	0.67	0.50	0.91	0.86	0.70	0.52	0.95	0.89	0.72	0.54	0.96	0.90	0.73	0.54
		ΔT	27	26	23	18	27	26	23	18	27	26	23	18	28	27	23	18	27	26	23	18	25	24	21	17
		kW	2.28	2.33	2.41	2.49	2.46	2.52	2.60	2.69	2.62	2.68	2.77	2.87	2.76	2.83	2.92	3.02	2.88	2.95	3.05	3.15	2.99	3.05	3.16	3.27
		Amps	10.2	10.4	10.7	11.0	10.9	11.1	11.4	11.8	11.7	11.9	12.3	12.7	12.4	12.6	13.0	13.5	13.1	13.4	13.8	14.2	13.8	14.1	14.5	15.0
		HI PR	235	253	267	278	263	284	299	312	300	322	340	355	341	367	388	404	384	413	436	455	424	456	482	503
		LO PR	106	113	123	131	112	119	130	139	117	124	135	144	123	130	142	152	128	137	149	159	133	141	154	164
85	1170	MBh	36.6	37.3	39.1	41.7	35.8	36.5	38.2	40.7	34.9	35.6	37.3	39.8	34.1	34.7	36.4	38.8	32.4	33.0	34.5	36.9	30.0	30.6	32.0	34.1
		S/T	0.95	0.92	0.83	0.67	0.98	0.95	0.86	0.69	1.00	0.97	0.88	0.71	1.00	1.00	0.91	0.74	1.00	1.00	0.94	0.76	1.00	1.00	0.95	0.77
		ΔT	27	27	25	22	28	27	26	22	27	27	26	22	27	27	26	22	25	26	26	22	24	24	24	21
		kW	2.38	2.43	2.51	2.60	2.57	2.63	2.71	2.81	2.74	2.80	2.89	2.99	2.88	2.95	3.05	3.15	3.01	3.08	3.18	3.29	3.12	3.19	3.30	3.41
		Amps	10.6	10.8	11.1	11.4	11.3	11.5	11.9	12.3	12.2	12.4	12.8	13.2	12.9	13.2	13.6	14.0	13.6	13.9	14.3	14.8	14.4	14.7	15.1	15.6
		HI PR	247	266	281	293	277	298	315	328	315	339	358	373	359	386	408	425	404	434	459	479	446	480	507	529
		LO PR	112	119	130	138	118	126	137	146	123	130	142	152	129	137	150	159	135	144	157	167	140	149	162	173
	1040	MBh	35.5	36.2	37.9	40.5	34.7	35.4	37.1	39.5	33.9	34.5	36.2	38.6	33.1	33.7	35.3	37.7	31.4	32.0	33.5	35.8	29.1	29.7	31.1	33.1
		S/T	0.90	0.87	0.79	0.64	0.94	0.90	0.82	0.66	0.96	0.93	0.84	0.68	0.99	0.96	0.86	0.70	1.00	0.99	0.90	0.73	1.00	1.00	0.90	0.73
		ΔT	28	28	26	23	29	28	27	23	29	28	27	23	29	29	27	23	28	28	27	23	26	26	25	21
		kW	2.36	2.41	2.49	2.57	2.55	2.61	2.69	2.78	2.71	2.78	2.87	2.97	2.86	2.93	3.02	3.13	2.98	3.05	3.16	3.27	3.09	3.16	3.27	3.38
		Amps	10.5	10.7	11.0	11.4	11.2	11.4	11.8	12.2	12.1	12.3	12.7	13.1	12.8	13.1	13.5	13.9	13.5	13.8	14.2	14.7	14.2	14.6	15.0	15.5
		HI PR	244	263	278	290	274	295	312	325	312	336	355	370	355	382	404	421	400	430	454	474	442	475	502	524
		LO PR	111	118	128	137	117	124	136	145	121	129	141	150	128	136	148	158	134	142	155	165	138	147	161	171
	910	MBh	32.8	33.4	35.0	37.4	32.0	32.7	34.2	36.5	31.3	31.9	33.4	35.6	30.5	31.1	32.6	34.8	29.0	29.6	31.0	33.0	26.9	27.4	28.7	30.6
		S/T	0.87	0.84	0.76	0.62	0.90	0.87	0.79	0.64	0.93	0.89	0.81	0.65	0.96	0.92	0.83	0.68	0.99	0.96	0.86	0.70	1.00	0.97	0.87	0.71
		ΔT	29	28	27	23	29	29	27	24	29	29	27	24	30	29	27	24	29	29	27	23	27	27	25	22
		kW	2.30	2.35	2.43	2.51	2.49	2.54	2.62	2.71	2.65	2.70	2.79	2.89	2.79	2.85	2.95	3.05	2.91	2.97	3.07	3.18	3.01	3.08	3.19	3.30
		Amps	10.2	10.4	10.7	11.1	10.9	11.2	11.5	11.9	11.8	12.0	12.4	12.8	12.5	12.7	13.1	13.6	13.2	13.5	13.9	14.3	13.9	14.2	14.6	15.1
		HI PR	237	255	269	281	266	286	302	315	303	326	344	359	345	371	392	409	388	417	441	460	428	461	487	508
		LO PR	107	114	125	133	113	121	132	140	118	125	137	146	124	132	144	153	130	138	151	160	134	143	156	166

IDB: Entering Indoor Dry Bulb Temperature

High and low pressures are measured at the liquid and suction access fittings.

Shaded area reflects AHRI conditions

kW = Total system power

Amps = outdoor unit amps (comp.+fan)

			Outdoor Ambient Temperature																							
			65ºF				75ºF				85ºF				95ºF				105ºF				115ºF			
			Entering Indoor Wet Bulb Temperature																							
IDB	Airflow		59	63	67	71	59	63	67	71	59	63	67	71	59	63	67	71	59	63	67	71	59	63	67	71
70	1575	MBh	42.3	43.9	48.1	-	41.3	42.8	46.9	-	40.4	41.8	45.8	-	39.4	40.8	44.7	-	37.4	38.8	42.5	-	34.6	35.9	39.3	-
		S/T	0.77	0.64	0.45	-	0.80	0.67	0.46	-	0.82	0.69	0.47	-	0.85	0.71	0.49	-	0.88	0.73	0.51	-	0.89	0.74	0.51	-
		ΔT	19	17	13	-	19	17	13	-	19	17	13	-	19	17	13	-	19	17	13	-	18	16	12	-
		kW	2.74	2.79	2.88	-	2.94	3.00	3.09	-	3.12	3.18	3.28	-	3.27	3.34	3.45	-	3.41	3.48	3.59	-	3.52	3.60	3.71	-
		Amps	11.6	11.9	12.2	-	12.5	12.7	13.1	-	13.4	13.7	14.1	-	14.2	14.5	14.9	-	15.0	15.3	15.8	-	15.8	16.2	16.7	-
		HI PR	236	254	268	-	265	285	301	-	301	324	342	-	343	369	390	-	386	415	438	-	426	459	484	-
		LO PR	113	120	131	-	119	127	138	-	124	132	144	-	130	138	151	-	136	145	158	-	141	150	163	-
	1400	MBh	41.1	42.6	46.7	-	40.1	41.6	45.6	-	39.2	40.6	44.5	-	38.2	39.6	43.4	-	36.3	37.6	41.2	-	33.6	34.9	38.2	-
		S/T	0.74	0.61	0.43	-	0.76	0.64	0.44	-	0.78	0.65	0.45	-	0.81	0.67	0.47	-	0.84	0.70	0.48	-	0.85	0.71	0.49	-
		ΔT	20	17	13	-	20	17	13	-	20	17	13	-	20	18	13	-	20	17	13	-	19	16	12	-
		kW	2.72	2.77	2.86	-	2.92	2.98	3.07	-	3.09	3.16	3.26	-	3.25	3.32	3.42	-	3.38	3.45	3.56	-	3.49	3.57	3.68	-
		Amps	11.6	11.8	12.1	-	12.4	12.6	13.0	-	13.3	13.6	14.0	-	14.1	14.4	14.8	-	14.9	15.2	15.7	-	15.7	16.0	16.5	-
		HI PR	233	251	265	-	262	282	298	-	298	321	339	-	339	365	386	-	382	411	434	-	422	454	479	-
		LO PR	111	119	129	-	118	125	137	-	122	130	142	-	129	137	149	-	135	143	156	-	139	148	162	-
	1225	MBh	37.9	39.3	43.1	-	37.0	38.4	42.1	-	36.2	37.5	41.1	-	35.3	36.6	40.1	-	33.5	34.7	38.1	-	31.0	32.2	35.3	-
		S/T	0.71	0.59	0.41	-	0.74	0.61	0.43	-	0.75	0.63	0.44	-	0.78	0.65	0.45	-	0.81	0.68	0.47	-	0.82	0.68	0.47	-
		ΔT	20	17	13	-	20	18	13	-	20	18	13	-	21	18	14	-	20	18	13	-	19	16	12	-
		kW	2.66	2.71	2.79	-	2.85	2.91	3.00	-	3.02	3.08	3.18	-	3.17	3.24	3.34	-	3.30	3.37	3.47	-	3.41	3.48	3.59	-
		Amps	11.3	11.5	11.8	-	12.1	12.3	12.7	-	13.0	13.2	13.6	-	13.7	14.0	14.5	-	14.5	14.8	15.3	-	15.3	15.6	16.1	-
		HI PR	226	244	257	-	254	273	289	-	289	311	328	-	329	354	374	-	370	399	421	-	409	440	465	-
		LO PR	108	115	126	-	114	122	133	-	119	126	138	-	125	133	145	-	131	139	152	-	135	144	157	-
75	1575	MBh	43.0	44.3	48.0	51.5	42.0	43.3	46.9	50.3	41.0	42.3	45.7	49.1	40.0	41.2	44.6	47.9	38.0	39.2	42.4	45.5	35.2	36.3	39.3	42.1
		S/T	0.88	0.78	0.59	0.38	0.91	0.81	0.62	0.40	0.93	0.83	0.63	0.41	0.96	0.86	0.65	0.42	1.00	0.89	0.68	0.44	1.00	0.90	0.68	0.44
		ΔT	22	20	17	11	22	21	17	12	22	21	17	12	22	21	17	12	22	20	17	12	21	19	16	11
		kW	2.76	2.82	2.90	2.99	2.96	3.02	3.12	3.21	3.14	3.21	3.31	3.41	3.30	3.37	3.48	3.59	3.43	3.51	3.62	3.74	3.55	3.63	3.74	3.87
		Amps	11.7	12.0	12.3	12.7	12.6	12.8	13.2	13.6	13.5	13.8	14.2	14.7	14.3	14.6	15.1	15.6	15.1	15.5	15.9	16.5	15.9	16.3	16.8	17.4
		HI PR	238	256	271	282	267	288	304	317	304	327	345	360	346	373	393	410	390	419	443	462	430	463	489	510
		LO PR	114	121	132	141	120	128	140	149	125	133	145	154	131	140	152	162	137	146	160	170	142	151	165	176
	1400	MBh	41.8	43.0	46.6	50.0	40.8	42.0	45.5	48.8	39.8	41.0	44.4	47.7	38.9	**40.0**	43.3	46.5	36.9	38.0	41.2	44.2	34.2	35.2	38.1	40.9
		S/T	0.84	0.75	0.57	0.36	0.87	0.78	0.59	0.38	0.89	0.80	0.60	0.39	0.92	**0.82**	0.62	0.40	0.95	0.85	0.65	0.41	0.96	0.86	0.65	0.42
		ΔT	23	21	17	12	23	21	18	12	23	21	18	12	23	**22**	18	12	23	21	17	12	22	20	16	11
		kW	2.74	2.79	2.88	2.97	2.94	3.00	3.09	3.19	3.12	3.18	3.28	3.39	3.27	**3.34**	3.45	3.56	3.41	3.48	3.59	3.71	3.52	3.60	3.71	3.83
		Amps	11.7	11.9	12.2	12.6	12.5	12.7	13.1	13.5	13.4	13.7	14.1	14.6	14.2	**14.5**	14.9	15.5	15.0	15.3	15.8	16.3	15.8	16.2	16.7	17.2
		HI PR	236	254	268	280	265	285	301	314	301	324	342	357	343	**369**	390	406	386	415	438	457	426	459	484	505
		LO PR	113	120	131	139	119	127	138	147	124	132	144	153	130	**138**	151	161	136	145	158	168	141	150	164	174
	1225	MBh	38.6	39.7	43.0	46.1	37.7	38.8	42.0	45.1	36.8	37.9	41.0	44.0	35.9	36.9	40.0	42.9	34.1	35.1	38.0	40.8	31.6	32.5	35.2	37.8
		S/T	0.81	0.72	0.55	0.35	0.84	0.75	0.57	0.36	0.86	0.77	0.58	0.37	0.89	0.79	0.60	0.39	0.92	0.82	0.62	0.40	0.93	0.83	0.63	0.40
		ΔT	23	22	18	12	24	22	18	12	24	22	18	12	24	22	18	12	23	22	18	12	22	20	17	11
		kW	2.68	2.73	2.81	2.90	2.87	2.93	3.02	3.11	3.04	3.11	3.20	3.30	3.20	3.26	3.36	3.47	3.32	3.39	3.50	3.62	3.44	3.51	3.62	3.74
		Amps	11.4	11.6	11.9	12.3	12.2	12.4	12.8	13.2	13.1	13.4	13.7	14.2	13.9	14.2	14.6	15.1	14.6	15.0	15.4	15.9	15.4	15.8	16.2	16.8
		HI PR	229	246	260	271	257	276	292	304	292	314	332	346	333	358	378	394	374	403	425	443	413	445	470	490
		LO PR	109	116	127	135	115	123	134	143	120	128	139	148	126	134	146	156	132	140	153	163	137	145	159	169

IDB: Entering Indoor Dry Bulb Temperature

Shaded area reflects ACCA (TVA) conditions

kW = Total system power

High and low pressures are measured at the liquid and suction access fittings.

Amps = outdoor unit amps (comp.+fan)

			Outdoor Ambient Temperature																							
			65ºF				75ºF				85ºF				95ºF				105ºF				115ºF			
			Entering Indoor Wet Bulb Temperature																							
IDB	Airflow		59	63	67	71	59	63	67	71	59	63	67	71	59	63	67	71	59	63	67	71	59	63	67	71
80	1575	MBh	43.8	44.8	47.8	51.1	42.8	43.7	46.7	49.9	41.8	42.7	45.6	48.7	40.8	41.6	44.5	47.6	38.7	39.6	42.3	45.2	35.9	36.6	39.1	41.9
		S/T	0.96	0.90	0.73	0.55	1.00	0.94	0.76	0.57	1.00	0.96	0.78	0.58	1.00	1.00	0.81	0.60	1.00	1.00	0.84	0.63	1.00	1.00	0.84	0.63
		ΔT	25	24	21	16	25	24	21	17	24	24	21	17	24	24	21	17	23	23	21	16	21	21	19	15
		kW	2.78	2.84	2.92	3.01	2.99	3.05	3.14	3.24	3.17	3.23	3.33	3.44	3.33	3.40	3.50	3.62	3.46	3.54	3.65	3.77	3.58	3.66	3.77	3.90
		Amps	11.8	12.1	12.4	12.8	12.7	12.9	13.3	13.7	13.6	13.9	14.3	14.8	14.4	14.8	15.2	15.7	15.3	15.6	16.1	16.6	16.1	16.4	16.9	17.5
		HI PR	241	259	273	285	270	291	307	320	307	330	349	364	350	376	397	415	393	423	447	466	435	468	494	515
		LO PR	115	122	133	142	121	129	141	150	126	134	147	156	132	141	154	164	139	148	161	172	144	153	167	178
	1400	MBh	42.5	43.5	46.4	49.6	41.5	42.4	45.4	48.5	40.6	41.4	44.3	47.3	39.6	40.4	**43.2**	46.2	37.6	38.4	41.0	43.9	34.8	35.6	38.0	40.6
		S/T	0.92	0.86	0.70	0.52	0.95	0.89	0.73	0.54	0.98	0.91	0.74	0.56	1.00	0.94	**0.77**	0.57	1.00	0.98	0.80	0.60	1.00	0.99	0.80	0.60
		ΔT	26	25	21	17	26	25	22	17	26	25	22	17	26	25	**22**	17	25	25	21	17	23	23	20	16
		kW	2.76	2.82	2.90	2.99	2.96	3.02	3.12	3.21	3.14	3.21	3.31	3.41	3.30	3.37	**3.48**	3.59	3.43	3.51	3.62	3.74	3.55	3.63	3.74	3.87
		Amps	11.7	12.0	12.3	12.7	12.6	12.8	13.2	13.6	13.5	13.8	14.2	14.7	14.3	14.6	**15.1**	15.6	15.1	15.5	15.9	16.5	15.9	16.3	16.8	17.4
		HI PR	238	256	271	282	267	288	304	317	304	327	346	360	346	373	**394**	410	390	419	443	462	430	463	489	510
		LO PR	114	121	132	141	120	128	140	149	125	133	145	154	131	140	**152**	162	137	146	160	170	142	151	165	176
	1225	MBh	39.3	40.1	42.9	45.8	38.3	39.2	41.9	44.7	37.4	38.2	40.9	43.7	36.5	37.3	39.9	42.6	34.7	35.4	37.9	40.5	32.1	32.8	35.1	37.5
		S/T	0.89	0.83	0.68	0.50	0.92	0.86	0.70	0.52	0.94	0.88	0.72	0.54	0.97	0.91	0.74	0.55	1.01	0.95	0.77	0.57	1.02	0.95	0.78	0.58
		ΔT	26	25	22	17	26	25	22	18	26	25	22	18	27	25	22	18	26	25	22	17	25	23	20	16
		kW	2.70	2.75	2.83	2.92	2.89	2.95	3.04	3.14	3.07	3.13	3.23	3.33	3.22	3.29	3.39	3.50	3.35	3.42	3.53	3.65	3.46	3.54	3.65	3.77
		Amps	11.5	11.7	12.0	12.4	12.3	12.5	12.9	13.3	13.2	13.5	13.9	14.3	14.0	14.3	14.7	15.2	14.8	15.1	15.5	16.1	15.5	15.9	16.4	16.9
		HI PR	231	249	263	274	259	279	295	307	295	317	335	350	336	361	382	398	378	407	429	448	418	449	474	495
		LO PR	110	117	128	136	117	124	135	144	121	129	141	150	127	135	148	157	133	142	155	165	138	147	160	171
85	1575	MBh	44.6	45.4	47.6	50.8	43.5	44.4	46.5	49.6	42.5	43.3	45.4	48.4	41.5	42.3	44.3	47.2	39.4	40.2	42.1	44.9	36.5	37.2	39.0	41.6
		S/T	1.00	0.97	0.88	0.71	1.00	1.00	0.91	0.74	1.00	1.00	0.93	0.76	1.00	1.00	0.96	0.78	1.00	1.00	1.00	0.81	1.00	1.00	1.00	0.82
		ΔT	26	26	24	21	25	26	25	21	25	25	25	21	24	25	25	22	23	23	25	21	21	22	23	20
		kW	2.80	2.86	2.95	3.04	3.01	3.07	3.17	3.27	3.19	3.26	3.36	3.47	3.35	3.42	3.53	3.65	3.49	3.56	3.68	3.80	3.61	3.69	3.80	3.93
		Amps	11.9	12.2	12.5	12.9	12.8	13.0	13.4	13.8	13.7	14.0	14.4	14.9	14.6	14.9	15.3	15.8	15.4	15.7	16.2	16.8	16.2	16.6	17.1	17.7
		HI PR	243	262	276	288	273	293	310	323	310	334	352	368	353	380	401	419	397	428	452	471	439	473	499	520
		LO PR	116	123	135	144	123	130	142	152	127	136	148	158	134	142	155	166	140	149	163	173	145	154	168	179
	1400	MBh	43.3	44.1	46.2	49.3	42.3	43.1	45.1	48.1	41.3	42.1	44.1	47.0	40.3	41.0	43.0	45.8	38.2	39.0	40.8	43.6	35.4	36.1	37.8	40.3
		S/T	0.96	0.93	0.84	0.68	1.00	0.96	0.87	0.70	1.00	0.99	0.89	0.72	1.00	1.00	0.92	0.75	1.00	1.00	0.95	0.77	1.00	1.00	0.96	0.78
		ΔT	27	27	25	22	28	27	26	22	27	27	26	22	26	27	26	22	25	26	26	22	23	24	24	21
		kW	2.78	2.84	2.92	3.01	2.99	3.05	3.14	3.24	3.17	3.23	3.33	3.44	3.33	3.40	3.50	3.62	3.46	3.54	3.65	3.77	3.58	3.66	3.77	3.90
		Amps	11.8	12.1	12.4	12.8	12.7	12.9	13.3	13.7	13.6	13.9	14.3	14.8	14.4	14.8	15.2	15.7	15.3	15.6	16.1	16.6	16.1	16.4	16.9	17.5
		HI PR	241	259	273	285	270	291	307	320	307	330	349	364	350	376	397	415	393	423	447	466	435	468	494	515
		LO PR	115	122	133	142	121	129	141	150	126	134	147	156	132	141	154	164	139	148	161	172	144	153	167	178
	1225	MBh	39.9	40.7	42.6	45.5	39.0	39.8	41.6	44.4	38.1	38.8	40.7	43.4	37.2	37.9	39.7	42.3	35.3	36.0	37.7	40.2	32.7	33.3	34.9	37.2
		S/T	0.93	0.90	0.81	0.66	0.96	0.93	0.84	0.68	0.99	0.95	0.86	0.70	1.00	0.98	0.89	0.72	1.00	1.00	0.92	0.75	1.00	1.00	0.93	0.75
		ΔT	28	27	26	22	28	28	26	23	28	28	26	23	28	28	26	23	26	27	26	23	25	25	24	21
		kW	2.72	2.77	2.86	2.94	2.92	2.98	3.07	3.16	3.09	3.16	3.25	3.36	3.25	3.31	3.42	3.53	3.38	3.45	3.56	3.68	3.49	3.57	3.68	3.80
		Amps	11.6	11.8	12.1	12.5	12.4	12.6	13.0	13.4	13.3	13.6	14.0	14.4	14.1	14.4	14.8	15.3	14.9	15.2	15.7	16.2	15.7	16.0	16.5	17.1
		HI PR	233	251	265	277	262	282	298	310	298	321	339	353	339	365	386	402	382	411	434	452	422	454	479	500
		LO PR	111	119	129	138	118	125	137	146	122	130	142	151	129	137	149	159	135	143	156	167	139	148	162	172

IDB: Entering Indoor Dry Bulb Temperature
High and low pressures are measured at the liquid and suction access fittings.

Shaded area reflects AHRI conditions

kW = Total system power
Amps = outdoor unit amps (comp.+fan)

Expanded Cooling Data — DP14DM48***41A*

			Outdoor Ambient Temperature																							
			65ºF				75ºF				85ºF				95ºF				105ºF				115ºF			
			Entering Indoor Wet Bulb Temperature																							
IDB	Airflow		59	63	67	71	59	63	67	71	59	63	67	71	59	63	67	71	59	63	67	71	59	63	67	71
70	1740	MBh	45.8	47.5	52.0	-	44.7	46.4	50.8	-	43.7	45.3	49.6	-	42.6	44.2	48.4	-	40.5	41.9	46.0	-	37.5	38.9	42.6	-
		S/T	0.76	0.63	0.44	-	0.79	0.66	0.45	-	0.81	0.67	0.47	-	0.83	0.70	0.48	-	0.86	0.72	0.50	-	0.87	0.73	0.50	-
		ΔT	18	16	12	-	19	16	12	-	19	16	12	-	19	16	12	-	18	16	12	-	17	15	11	-
		kW	3.10	3.16	3.26	-	3.33	3.39	3.50	-	3.52	3.60	3.71	-	3.70	3.78	3.90	-	3.85	3.93	4.05	-	3.98	4.06	4.19	-
		Amps	13.0	13.3	13.6	-	13.9	14.2	14.6	-	14.9	15.3	15.7	-	15.8	16.2	16.6	-	16.7	17.1	17.6	-	17.6	18.0	18.5	-
		HI PR	237	255	270	-	266	287	303	-	303	326	344	-	345	371	392	-	388	418	441	-	429	461	487	-
		LO PR	111	118	129	-	117	125	136	-	122	129	141	-	128	136	149	-	134	143	156	-	139	147	161	-
	1550	MBh	44.5	46.1	50.5	-	43.4	45.0	49.3	-	42.4	43.9	48.1	-	41.4	42.9	47.0	-	39.3	40.7	44.6	-	36.4	37.7	41.3	-
		S/T	0.72	0.60	0.42	-	0.75	0.63	0.43	-	0.77	0.64	0.44	-	0.79	0.66	0.46	-	0.82	0.69	0.48	-	0.83	0.69	0.48	-
		ΔT	19	17	13	-	19	17	13	-	19	17	13	-	19	17	13	-	19	17	13	-	18	16	12	-
		kW	3.08	3.14	3.23	-	3.30	3.37	3.47	-	3.50	3.57	3.68	-	3.67	3.75	3.86	-	3.82	3.90	4.02	-	3.94	4.03	4.16	-
		Amps	12.9	13.2	13.5	-	13.8	14.1	14.5	-	14.8	15.1	15.6	-	15.7	16.0	16.5	-	16.6	17.0	17.5	-	17.5	17.8	18.4	-
		HI PR	235	253	267	-	264	284	300	-	300	323	341	-	341	367	388	-	384	413	437	-	424	457	482	-
		LO PR	110	117	127	-	116	123	135	-	121	128	140	-	127	135	147	-	133	141	154	-	137	146	159	-
	1360	MBh	41.0	42.5	46.6	-	40.1	41.5	45.5	-	39.1	40.6	44.4	-	38.2	39.6	43.4	-	36.3	37.6	41.2	-	33.6	34.8	38.2	-
		S/T	0.70	0.58	0.40	-	0.72	0.60	0.42	-	0.74	0.62	0.43	-	0.77	0.64	0.44	-	0.79	0.66	0.46	-	0.80	0.67	0.46	-
		ΔT	19	17	13	-	20	17	13	-	20	17	13	-	20	17	13	-	19	17	13	-	18	16	12	-
		kW	3.01	3.07	3.16	-	3.23	3.29	3.39	-	3.42	3.49	3.59	-	3.58	3.66	3.77	-	3.73	3.81	3.92	-	3.85	3.93	4.06	-
		Amps	12.6	12.9	13.2	-	13.5	13.8	14.1	-	14.5	14.8	15.2	-	15.3	15.7	16.1	-	16.2	16.5	17.0	-	17.0	17.4	17.9	-
		HI PR	228	245	259	-	256	275	291	-	291	313	330	-	331	356	376	-	373	401	423	-	412	443	468	-
		LO PR	106	113	124	-	112	120	131	-	117	124	136	-	123	131	143	-	129	137	149	-	133	142	155	-
75	1740	MBh	46.6	48.0	51.9	55.7	45.5	46.8	50.7	54.4	44.4	45.7	49.5	53.1	43.3	44.6	48.3	51.8	41.2	42.4	45.9	49.2	38.1	39.3	42.5	45.6
		S/T	0.86	0.77	0.58	0.38	0.89	0.80	0.61	0.39	0.92	0.82	0.62	0.40	0.95	0.85	0.64	0.41	0.98	0.88	0.66	0.43	0.99	0.89	0.67	0.43
		ΔT	21	20	16	11	21	20	16	11	22	20	16	11	22	20	16	11	21	20	16	11	20	18	15	10
		kW	3.13	3.19	3.28	3.38	3.35	3.42	3.53	3.63	3.55	3.63	3.74	3.86	3.73	3.81	3.93	4.05	3.88	3.96	4.09	4.22	4.01	4.09	4.23	4.36
		Amps	13.1	13.4	13.8	14.2	14.0	14.3	14.7	15.2	15.1	15.4	15.8	16.4	16.0	16.3	16.8	17.4	16.9	17.2	17.7	18.4	17.8	18.1	18.7	19.3
		HI PR	240	258	272	284	269	289	306	319	306	329	348	363	348	375	396	413	392	422	445	465	433	466	492	513
		LO PR	112	119	130	139	118	126	137	146	123	131	143	152	129	137	150	160	135	144	157	167	140	149	163	173
	1550	MBh	45.2	46.6	50.4	54.1	44.2	45.5	49.2	52.8	43.1	44.4	48.0	51.6	42.1	**43.3**	46.9	50.3	40.0	41.1	44.5	47.8	37.0	38.1	41.3	44.3
		S/T	0.82	0.74	0.56	0.36	0.85	0.76	0.58	0.37	0.87	0.78	0.59	0.38	0.90	**0.81**	0.61	0.39	0.94	0.84	0.63	0.41	0.94	0.84	0.64	0.41
		ΔT	22	20	17	11	22	21	17	12	22	21	17	12	23	**21**	17	12	22	20	17	12	21	19	16	11
		kW	3.10	3.16	3.26	3.36	3.33	3.39	3.50	3.61	3.53	3.60	3.71	3.83	3.70	**3.78**	3.90	4.02	3.85	3.93	4.05	4.19	3.98	4.06	4.19	4.33
		Amps	13.0	13.3	13.6	14.1	13.9	14.2	14.6	15.1	14.9	15.3	15.7	16.2	15.8	**16.2**	16.7	17.2	16.7	17.1	17.6	18.2	17.6	18.0	18.5	19.2
		HI PR	237	255	270	281	266	287	303	316	303	326	344	359	345	**371**	392	409	388	418	441	460	429	461	487	508
		LO PR	111	118	129	137	117	125	136	145	122	130	141	151	128	**136**	149	158	134	143	156	166	139	147	161	171
	1360	MBh	41.7	43.0	46.5	49.9	40.8	42.0	45.4	48.8	39.8	41.0	44.3	47.6	38.8	40.0	43.3	46.4	36.9	38.0	41.1	44.1	34.2	35.2	38.1	40.9
		S/T	0.79	0.71	0.54	0.35	0.82	0.74	0.56	0.36	0.84	0.75	0.57	0.37	0.87	0.78	0.59	0.38	0.90	0.81	0.61	0.39	0.91	0.81	0.62	0.40
		ΔT	22	21	17	12	23	21	17	12	23	21	17	12	23	21	17	12	23	21	17	12	21	19	16	11
		kW	3.03	3.09	3.18	3.28	3.25	3.32	3.42	3.52	3.44	3.51	3.62	3.74	3.61	3.69	3.80	3.92	3.76	3.84	3.96	4.08	3.88	3.96	4.09	4.22
		Amps	12.7	13.0	13.3	13.8	13.6	13.9	14.3	14.7	14.6	14.9	15.3	15.8	15.5	15.8	16.2	16.8	16.3	16.7	17.2	17.7	17.2	17.6	18.1	18.7
		HI PR	230	248	262	273	258	278	294	306	294	316	334	348	335	360	380	397	376	405	428	446	416	448	473	493
		LO PR	108	114	125	133	114	121	132	141	118	126	137	146	124	132	144	153	130	138	151	161	134	143	156	166

IDB: Entering Indoor Dry Bulb Temperature

Shaded area reflects ACCA (TVA) conditions

kW = Total system power

High and low pressures are measured at the liquid and suction access fittings.

Amps = outdoor unit amps (comp.+fan)

			Outdoor Ambient Temperature																							
			65ºF				75ºF				85ºF				95ºF				105ºF				115ºF			
			Entering Indoor Wet Bulb Temperature																							
IDB	Airflow		59	63	67	71	59	63	67	71	59	63	67	71	59	63	67	71	59	63	67	71	59	63	67	71
80	1740	MBh	47.4	48.4	51.7	55.3	46.3	47.3	50.5	54.0	45.2	46.2	49.3	52.7	44.1	45.1	48.1	51.5	41.9	42.8	45.7	48.9	38.8	39.7	42.4	45.3
		S/T	0.95	0.89	0.72	0.54	1.00	0.92	0.75	0.56	1.00	0.94	0.77	0.57	1.00	1.00	0.79	0.59	1.00	1.00	0.82	0.61	1.00	1.00	0.83	0.62
		ΔT	24	23	20	16	24	23	20	16	24	23	20	16	23	24	20	16	22	23	20	16	21	21	19	15
		kW	3.15	3.21	3.31	3.41	3.38	3.45	3.55	3.66	3.58	3.66	3.77	3.89	3.76	3.84	3.96	4.09	3.91	3.99	4.12	4.25	4.04	4.13	4.26	4.40
		Amps	13.2	13.5	13.9	14.3	14.1	14.4	14.8	15.3	15.2	15.5	16.0	16.5	16.1	16.4	16.9	17.5	17.0	17.4	17.9	18.5	17.9	18.3	18.9	19.5
		HI PR	242	261	275	287	272	292	309	322	309	333	351	366	352	379	400	417	396	426	450	469	437	471	497	518
		LO PR	113	120	131	140	120	127	139	148	124	132	144	154	130	139	152	161	137	145	159	169	141	150	164	175
	1550	MBh	46.0	47.0	50.2	53.7	45.0	45.9	49.1	52.5	43.9	44.8	47.9	51.2	42.8	43.7	**46.7**	50.0	40.7	41.6	44.4	47.5	37.7	38.5	41.1	44.0
		S/T	0.90	0.85	0.69	0.51	0.93	0.88	0.71	0.53	0.96	0.90	0.73	0.55	0.99	0.93	**0.76**	0.56	1.00	0.96	0.78	0.59	1.00	0.97	0.79	0.59
		ΔT	25	24	21	16	25	24	21	17	25	24	21	17	25	24	**21**	17	24	24	21	16	22	22	19	15
		kW	3.13	3.19	3.28	3.38	3.35	3.42	3.53	3.63	3.55	3.63	3.74	3.86	3.73	3.81	**3.93**	4.05	3.88	3.96	4.09	4.22	4.01	4.10	4.23	4.36
		Amps	13.1	13.4	13.8	14.2	14.0	14.3	14.7	15.2	15.1	15.4	15.8	16.4	16.0	16.3	**16.8**	17.4	16.9	17.2	17.8	18.4	17.8	18.2	18.7	19.3
		HI PR	240	258	272	284	269	289	306	319	306	329	348	363	348	375	**396**	413	392	422	445	465	433	466	492	513
		LO PR	112	119	130	139	118	126	137	146	123	131	143	152	129	137	**150**	160	135	144	157	167	140	149	163	173
	1360	MBh	42.5	43.4	46.4	49.6	41.5	42.4	45.3	48.4	40.5	41.4	44.2	47.3	39.5	40.4	43.1	46.1	37.5	38.4	41.0	43.8	34.8	35.5	38.0	40.6
		S/T	0.87	0.82	0.66	0.50	0.90	0.85	0.69	0.51	0.92	0.87	0.71	0.53	0.95	0.89	0.73	0.54	0.99	0.93	0.76	0.56	1.00	0.94	0.76	0.57
		ΔT	25	24	21	17	25	24	21	17	25	24	21	17	25	24	21	17	25	24	21	17	23	23	20	16
		kW	3.06	3.12	3.21	3.31	3.28	3.34	3.44	3.55	3.47	3.54	3.65	3.76	3.64	3.72	3.83	3.95	3.79	3.87	3.99	4.12	3.91	4.00	4.12	4.26
		Amps	12.8	13.1	13.4	13.9	13.7	14.0	14.4	14.8	14.7	15.0	15.4	16.0	15.6	15.9	16.4	16.9	16.5	16.8	17.3	17.9	17.3	17.7	18.2	18.9
		HI PR	233	250	264	276	261	281	297	309	297	319	337	352	338	364	384	401	380	409	432	451	420	452	477	498
		LO PR	109	116	126	134	115	122	133	142	119	127	139	148	125	133	146	155	131	140	153	162	136	145	158	168
85	1740	MBh	48.2	49.2	51.5	54.9	47.1	48.0	50.3	53.7	46.0	46.9	49.1	52.4	44.9	45.7	47.9	51.1	42.6	43.4	45.5	48.5	39.5	40.2	42.1	45.0
		S/T	0.99	0.96	0.86	0.70	1.00	0.99	0.89	0.73	1.00	1.00	0.92	0.74	1.00	1.00	0.95	0.77	1.00	1.00	0.98	0.80	1.00	1.00	0.99	0.80
		ΔT	25	25	23	20	25	25	24	21	24	25	24	21	24	24	24	21	23	23	24	20	21	21	22	19
		kW	3.17	3.24	3.33	3.44	3.40	3.47	3.58	3.69	3.61	3.68	3.80	3.92	3.79	3.87	3.99	4.12	3.94	4.03	4.15	4.29	4.07	4.16	4.29	4.44
		Amps	13.3	13.6	14.0	14.4	14.2	14.5	15.0	15.4	15.3	15.6	16.1	16.6	16.2	16.6	17.1	17.6	17.1	17.5	18.0	18.7	18.1	18.5	19.0	19.7
		HI PR	245	263	278	290	274	295	312	325	312	336	355	370	355	383	404	421	400	430	454	474	442	475	502	524
		LO PR	114	122	133	141	121	128	140	149	125	133	146	155	132	140	153	163	138	147	160	171	143	152	166	177
	1550	MBh	46.8	47.7	50.0	53.3	45.7	46.6	48.8	52.1	44.6	45.5	47.7	50.9	43.6	44.4	46.5	49.6	41.4	42.2	44.2	47.1	38.3	39.1	40.9	43.7
		S/T	0.95	0.91	0.82	0.67	0.98	0.95	0.85	0.69	1.00	0.97	0.88	0.71	1.00	1.00	0.90	0.73	1.00	1.00	0.94	0.76	1.00	1.00	0.95	0.77
		ΔT	26	26	24	21	27	26	25	21	26	26	25	21	26	26	25	22	25	25	25	21	23	23	23	20
		kW	3.15	3.21	3.31	3.41	3.38	3.45	3.55	3.66	3.58	3.66	3.77	3.89	3.76	3.84	3.96	4.09	3.91	3.99	4.12	4.25	4.04	4.13	4.26	4.40
		Amps	13.2	13.5	13.9	14.3	14.1	14.4	14.8	15.3	15.2	15.5	16.0	16.5	16.1	16.4	16.9	17.5	17.0	17.4	17.9	18.5	17.9	18.3	18.9	19.5
		HI PR	242	261	275	287	272	292	309	322	309	333	351	366	352	379	400	417	396	426	450	469	437	471	497	518
		LO PR	113	120	131	140	120	127	139	148	124	132	144	154	130	139	152	161	137	145	159	169	141	150	164	175
	1360	MBh	43.2	44.1	46.1	49.2	42.2	43.0	45.1	48.1	41.2	42.0	44.0	46.9	40.2	41.0	42.9	45.8	38.2	38.9	40.8	43.5	35.4	36.1	37.8	40.3
		S/T	0.91	0.88	0.79	0.64	0.95	0.91	0.82	0.67	0.97	0.94	0.84	0.68	1.00	0.97	0.87	0.71	1.00	1.00	0.90	0.73	1.00	1.00	0.91	0.74
		ΔT	27	26	25	21	27	27	25	22	27	27	25	22	27	27	25	22	26	26	25	22	24	24	23	20
		kW	3.08	3.14	3.23	3.33	3.30	3.37	3.47	3.58	3.50	3.57	3.68	3.79	3.67	3.75	3.86	3.99	3.82	3.90	4.02	4.15	3.94	4.03	4.16	4.29
		Amps	12.9	13.2	13.5	14.0	13.8	14.1	14.5	14.9	14.8	15.1	15.6	16.1	15.7	16.0	16.5	17.1	16.6	16.9	17.5	18.0	17.5	17.8	18.4	19.0
		HI PR	235	253	267	278	264	284	299	312	300	323	341	355	341	367	388	405	384	413	436	455	424	457	482	503
		LO PR	110	117	127	136	116	123	135	143	120	128	140	149	127	135	147	157	133	141	154	164	137	146	159	170

IDB: Entering Indoor Dry Bulb Temperature

Shaded area reflects AHRI conditions

kW = Total system power

High and low pressures are measured at the liquid and suction access fittings.

Amps = outdoor unit amps (comp.+fan)

DP14DM24*41****

	Outdoor Ambient Temperature																	
	65	60	55	50	47	45	40	35	30	25	20	17	15	10	5	0	-5	-10
MBh	30.5	28.9	27.2	25.4	24.3	23.5	21.8	20.1	17.1	15.7	14.5	13.7	13.2	11.8	10.5	9.1	7.8	6.4
T/R	33.2	31.5	29.6	27.7	26.4	25.6	23.8	21.9	18.6	17.1	15.8	14.9	14.4	12.9	11.4	10.0	8.5	7.0
kW	2.07	2.02	1.98	1.94	1.91	1.90	1.86	1.81	2.04	1.99	1.94	1.91	1.89	1.84	1.79	1.75	1.69	1.65
Amps	10.2	9.5	8.9	8.4	8.1	7.9	7.5	7.1	6.9	6.6	6.3	6.1	6.1	5.8	5.4	5.1	4.8	4.3
COP	4.32	4.18	4.02	3.84	3.71	3.63	3.45	3.25	2.44	2.31	2.18	2.09	2.04	1.88	1.71	1.53	1.35	1.14
EER	14.8	14.3	13.7	13.1	12.7	12.4	11.8	11.1	8.3	7.9	7.5	7.2	7.0	6.4	5.8	5.2	4.6	3.9
HI PR	411	394	379	362	354	347	334	320	307	293	281	275	270	259	249	239	231	223
LO PR	141	130	122	112	106	102	94	83	75	67	59	55	53	45	39	33	28	22

DP14DM30*41****

	Outdoor Ambient Temperature																	
	65	60	55	50	47	45	40	35	30	25	20	17	15	10	5	0	-5	-10
MBh	36.3	34.4	32.3	30.2	28.9	28.0	26.0	24.0	20.6	19.1	17.5	16.6	16.0	14.3	12.7	11.1	9.4	7.7
T/R	32.3	30.6	28.8	26.9	25.7	24.9	23.1	21.3	18.4	17.0	15.6	14.7	14.2	12.7	11.3	9.9	8.4	6.9
kW	2.54	2.49	2.44	2.39	2.36	2.34	2.29	2.24	2.12	2.07	2.02	1.99	1.97	1.92	1.88	1.83	1.78	1.73
Amps	13.0	12.1	11.4	10.8	10.5	10.3	9.8	9.3	9.0	8.7	8.3	8.1	8.1	7.7	7.3	6.9	6.5	6.0
COP	4.18	4.03	3.88	3.70	3.58	3.50	3.32	3.13	2.85	2.70	2.54	2.43	2.37	2.18	1.98	1.77	1.55	1.31
EER	14.3	13.8	13.2	12.6	12.2	12.0	11.3	10.7	9.8	9.2	8.7	8.3	8.1	7.4	6.8	6.1	5.3	4.5
HI PR	415	398	382	366	357	350	337	323	310	296	284	277	272	262	252	241	233	225
LO PR	142	132	124	113	107	103	95	84	76	68	60	56	54	45	39	33	29	23

DP14DM36*41****

	Outdoor Ambient Temperature																	
	65	60	55	50	47	45	40	35	30	25	20	17	15	10	5	0	-5	-10
MBh	43.4	41.0	38.6	36.1	34.5	33.4	31.0	28.6	24.6	22.7	20.9	19.8	19.0	17.1	15.2	13.2	11.3	9.2
T/R	33.5	31.7	29.8	27.9	26.6	25.8	24.0	22.1	19.0	17.6	16.2	15.3	14.7	13.2	11.7	10.2	8.7	7.1
kW	3.20	3.14	3.07	3.01	2.97	2.94	2.88	2.82	2.49	2.43	2.37	2.34	2.32	2.26	2.20	2.15	2.09	2.04
Amps	16.1	15.1	14.2	13.4	13.0	12.8	12.1	11.6	11.1	10.7	10.3	10.1	9.9	9.5	9.0	8.5	8.0	7.3
COP	3.96	3.83	3.68	3.52	3.40	3.32	3.15	2.98	2.90	2.74	2.58	2.47	2.41	2.21	2.01	1.80	1.58	1.33
EER	13.5	13.1	12.6	12.0	11.6	11.4	10.8	10.2	9.9	9.4	8.8	8.5	8.2	7.6	6.9	6.1	5.4	4.5
HI PR	464	445	428	409	399	392	376	361	346	331	317	310	304	293	281	270	260	251
LO PR	139	129	121	111	105	101	92	82	74	66	58	54	52	44	38	32	28	22

DP14DM42*41****

	Outdoor Ambient Temperature																	
	65	60	55	50	47	45	40	35	30	25	20	17	15	10	5	0	-5	-10
MBh	52.9	50.0	47.1	44.0	42.1	40.7	37.8	34.9	30.1	27.8	25.6	24.2	23.3	20.9	18.5	16.1	13.8	11.3
T/R	35.0	33.1	31.1	29.1	27.8	27.0	25.0	23.1	19.9	18.4	16.9	16.0	15.4	13.8	12.2	10.7	9.1	7.5
kW	3.58	3.51	3.44	3.37	3.33	3.30	3.23	3.16	3.01	2.95	2.88	2.84	2.82	2.75	2.68	2.62	2.55	2.49
Amps	18.1	16.8	15.9	15.0	14.5	14.3	13.5	12.9	12.4	12.0	11.5	11.2	11.1	10.6	10.0	9.5	8.9	8.2
COP	4.33	4.18	4.01	3.82	3.70	3.61	3.43	3.23	2.92	2.76	2.60	2.49	2.42	2.22	2.02	1.80	1.58	1.33
EER	14.8	14.3	13.7	13.1	12.6	12.3	11.7	11.0	10.0	9.4	8.9	8.5	8.3	7.6	6.9	6.2	5.4	4.5
HI PR	414	397	382	365	357	350	336	323	309	295	283	277	272	261	251	241	232	224
LO PR	142	132	123	113	107	103	95	84	76	68	60	55	53	45	39	33	29	23

DP14DM48*41****

	Outdoor Ambient Temperature																	
	65	60	55	50	47	45	40	35	30	25	20	17	15	10	5	0	-5	-10
MBh	56.7	53.7	50.5	47.2	45.1	43.7	40.6	37.4	32.8	30.3	27.9	26.3	25.3	22.7	20.2	17.6	15.0	12.3
T/R	33.9	32.1	30.2	28.2	26.9	26.1	24.2	22.4	19.6	18.1	16.6	15.7	15.1	13.6	12.0	10.5	9.0	7.3
kW	3.92	3.85	3.77	3.70	3.65	3.62	3.55	3.48	3.31	3.24	3.17	3.12	3.10	3.02	2.95	2.88	2.81	2.74
Amps	19.4	18.1	17.1	16.2	15.7	15.4	14.6	14.0	13.5	12.9	12.4	12.2	12.0	11.5	10.9	10.3	9.7	8.9
COP	4.23	4.08	3.92	3.74	3.61	3.53	3.35	3.15	2.90	2.74	2.58	2.46	2.39	2.20	2.00	1.78	1.56	1.31
EER	14.5	14.0	13.4	12.8	12.3	12.1	11.4	10.8	9.9	9.3	8.8	8.4	8.2	7.5	6.8	6.1	5.3	4.5
HI PR	406	389	374	358	349	343	329	316	303	289	278	271	266	256	246	236	228	220
LO PR	132	122	115	105	99	96	88	78	71	63	55	52	50	42	36	31	27	21

Above information is for nominal CFM and 70 degree indoor dry bulb. Instantaneous capacity listed. KW = Total system power
High pressure is measured at the liquid line access fitting. AMPS: Unit amps (comp.+ evaporator motor + condenser fan motor)
Low pressure is measured at the compressor suction access fitting.

DP14DM24060M41 - Rise Range: 35° - 65°**

Unit Static	T1 - 1st Stage Heating Speed			T2 - 2nd Stage Heating Speed			T3 - Cooling Speed		T4 - Cooling Speed		T5 - Cooling Speed	
	CFM	Watts	Rise	CFM	Watts	Rise	CFM	Watts	CFM	Watts	CFM	Watts
0.1	616	51	55	845	105	53	859	94	885	103	1048	140
0.2	581	60	58	809	116	56	810	102	836	111	999	148
0.3	535	69	63	774	124	58	761	109	788	118	950	155
0.4	476	79	X	736	134	61	713	117	740	126	901	163
0.5	422	87	X	695	140	65	664	125	692	134	852	171
0.6	365	95	X	646	148	X	615	133	643	142	803	179
0.7	334	101	X	580	161	X	---	---	---	---	---	---
0.8	300	103	X	532	167	X	---	---	---	---	---	---

DP14DM3080M41 - Rise Range: 35° - 65°**

Unit Static	T1 - 1st Stage Heating Speed			T2 - 2nd Stage Heating Speed			T3 - Cooling Speed		T4 - Cooling Speed		T5 - Cooling Speed	
	CFM	Watts	Rise	CFM	Watts	Rise	CFM	Watts	CFM	Watts	CFM	Watts
0.1	997	147	45	1276	284	47	1059	137	1071	142	1333	234
0.2	965	155	47	1238	284	48	1008	144	1023	149	1285	242
0.3	922	165	49	1206	289	50	956	151	976	157	1237	250
0.4	886	173	51	1164	302	52	908	158	928	164	1189	257
0.5	835	182	54	1131	314	53	857	166	880	172	1141	265
0.6	781	188	58	1086	319	55	784	175	832	180	1094	273
0.7	731	200	62	1038	319	58	732	180	784	187	---	---
0.8	677	202	X	984	322	61	673	188	736	195	---	---

DP14DM36080M41 - Rise Range: 35° - 65°**

Unit Static	T1 - 1st Stage Heating Speed			T2 - 2nd Stage Heating Speed			T3 - Cooling Speed		T4 - Cooling Speed		T5 - Cooling Speed	
	CFM	Watts	Rise	CFM	Watts	Rise	CFM	Watts	CFM	Watts	CFM	Watts
0.1	997	147	45	1276	284	47	1317	230	1317	230	1453	269
0.2	965	155	47	1238	284	48	1269	237	1269	237	1405	277
0.3	922	165	49	1206	289	50	1221	245	1221	245	1357	284
0.4	886	173	51	1164	302	52	1174	253	1174	253	1309	292
0.5	835	182	54	1131	314	53	1126	260	1126	260	1261	300
0.6	781	188	58	1086	319	55	1078	268	1078	268	1213	307
0.7	731	200	62	1038	319	58	1030	276	1030	276	---	---
0.8	677	202	X	984	322	61	982	283	982	283	---	---

DP14DM42100M41 - Rise Range: 35° - 65°**

Unit Static	T1 - 1st Stage Heating Speed			T2 - 2nd Stage Heating Speed			T3 - Cooling Speed		T4 - Cooling Speed		T5 - Cooling Speed	
	CFM	Watts	Rise	CFM	Watts	Rise	CFM	Watts	CFM	Watts	CFM	Watts
0.1	1098	167	51	1423	324	53	1354	260	1501	320	1609	365
0.2	1038	178	54	1375	335	55	1296	267	1446	328	1556	373
0.3	991	184	57	1322	347	57	1237	275	1391	336	1504	381
0.4	932	192	60	1275	347	59	1178	283	1336	344	1451	388
0.5	871	204	65	1224	357	61	1120	291	1281	352	1399	396
0.6	811	213	X	1172	364	64	1061	299	1226	359	1347	404
0.7	753	210	X	1130	379	X	1002	306	1171	367	1294	412
0.8	704	221	X	1075	384	X	944	314	1116	375	1242	420

DP14DM48100M41 - Rise Range: 35° - 65°**

Unit Static	T1 - 1st Stage Heating Speed			T2 - 2nd Stage Heating Speed			T3 - Cooling Speed		T4 - Cooling Speed		T5 - Cooling Speed	
	CFM	Watts	Rise	CFM	Watts	Rise	CFM	Watts	CFM	Watts	CFM	Watts
0.1	1098	167	51	1423	324	53	1164	180	1397	315	1758	427
0.2	1038	178	54	1375	335	55	1100	188	1354	320	1709	435
0.3	991	184	57	1322	347	57	1037	196	1306	329	1660	443
0.4	932	192	60	1275	347	59	974	204	1261	338	1612	450
0.5	871	204	65	1224	357	61	910	212	1211	343	1563	458
0.6	811	213	X	1172	364	64	847	220	1168	356	1514	466
0.7	753	210	X	1130	379	X	784	227	1111	373	1466	474
0.8	704	221	X	1075	384	X	720	235	1066	373	1417	482

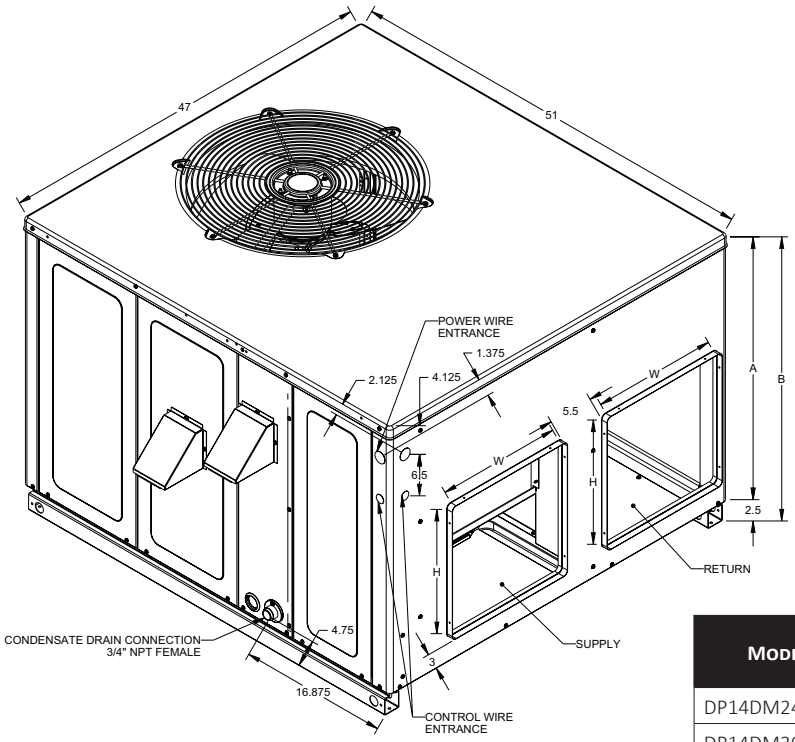

Model	Unit Dimensions (Inches)				Chassis Size
			Height		
	W	D	A	B	
DP14DM24***41	47	51	32	34½	Medium
DP14DM30***41	47	51	32	34½	Medium
DP14DM36***41	47	51	32	34½	Medium
DP14DM42***41	47	51	40	42½	Large
DP14DM48***41	47	51	40	42½	Large

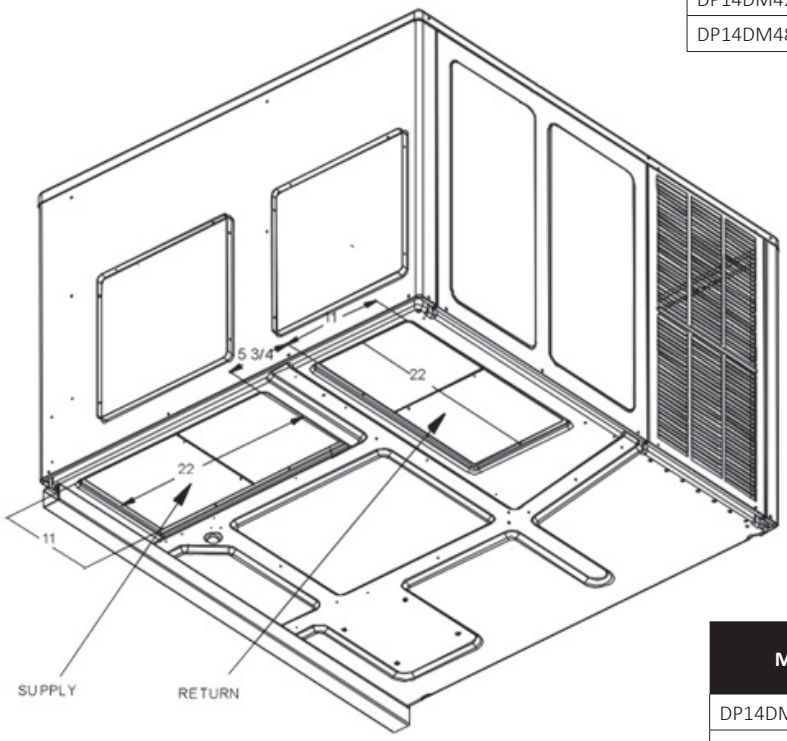

Model	Duct Openings			
	Supply		Return	
	W	H	W	H
DP14DM24***41	16	16	16	16
DP14DM30***41	16	16	16	16
DP14DM36***41	16	16	16	16
DP14DM42***41	16	18	16	18
DP14DM48***41	16	18	16	18

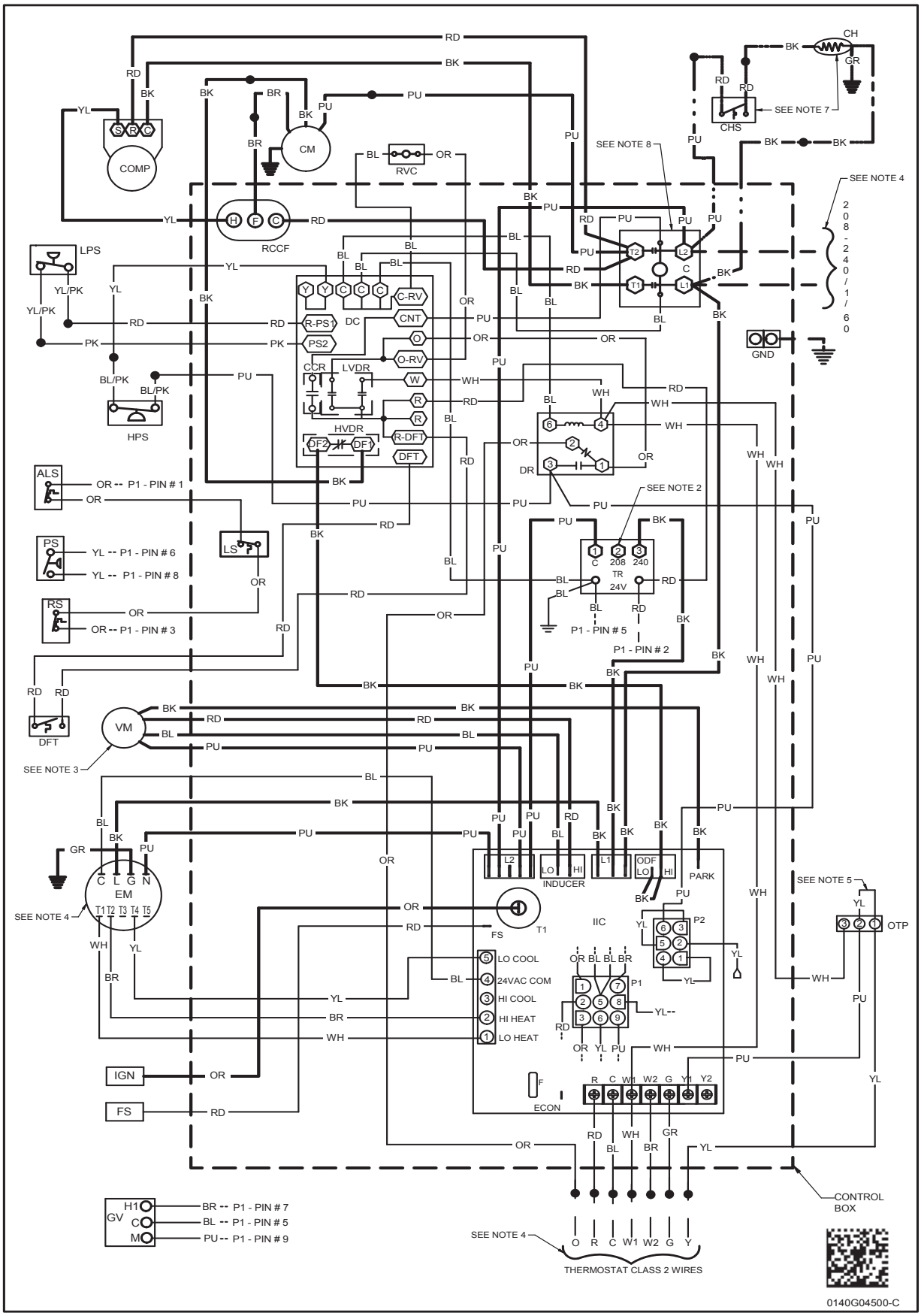

WARNING

High Voltage: Disconnect all power before servicing or installing this unit. Multiple power sources may be present. Failure to do so may cause property damage, personal injury, or death.

Wiring is subject to change. Always refer to the wiring diagram on the unit for the most up-to-date wiring.

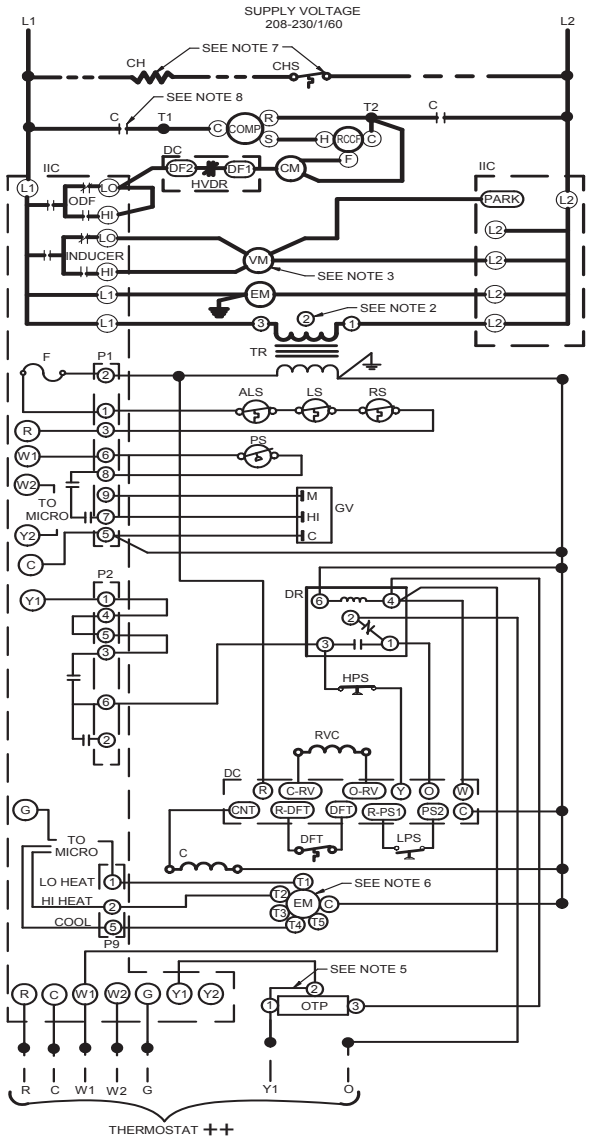

COMPONENT LEGEND

ALS	AUXILLARY LIMIT SWITCH
C	CONTACTOR
CH	CRANKCASE HEATER
CHS	CRANKCASE HEATER SWITCH
CM	CONDENSER MOTOR
COMP	COMPRESSOR
DC	DEFROST CONTROL BOARD
DFT	DEFROST THERMOSTAT
DR	DEFROST RELAY
EM	EVAPORATOR MOTOR
F	FUSE
FS	FLAME SENSOR
GND	EQUIPMENT GROUND
GV	GAS VALVE
HPS	HIGH PRESSURE SWITCH
IIC	INTEGRATED IGNITION CONTROL
IGN	IGNITOR
LPS	LOW PRESSURE SWITCH
LS	LIMIT SWITCH
OTP	OUTDOOR THERMOSTAT PLUG
P1	9 PIN CONNECTOR PLUG
P2	6 PIN CONNECTOR PLUG
PS	PRESSURE SWITCH
RCCF	RUN CAPACITOR COMPRESSOR / FAN
RS	ROLLOUT SWITCH
RVC	REVERSING VALVE COIL
TR	TRANSFORMER
VM	VENT MOTOR

FACTORY WIRING

- LINE VOLTAGE
- LOW VOLTAGE
- OPTIONAL HIGH VOLTAGE

FIELD WIRING

- HIGH VOLTAGE
- LOW VOLTAGE

WIRE CODE

BK	BLACK
BL	BLUE
BR	BROWN
GR	GREEN
OR	ORANGE
PK	PINK
PU	PURPLE
RD	RED
WH	WHITE
YL	YELLOW

NOTES

1. REPLACEMENT WIRE MUST BE THE SAME SIZE AND TYPE OF INSULATION AS ORIGINAL (AT LEAST 105°C). USE COPPER CONDUCTOR ONLY.
2. FOR 208V TRANSFORMER OPERATION MOVE BLACK WIRE FROM TERMINAL 3 TO TERMINAL 2 ON TRANSFORMER.
3. FOR 208V VENT MOTOR OPERATION, REMOVE BLUE LEAD FROM INDUCER LOW TERMINAL. MOVE BLACK LEAD FROM PARK TERMINAL TO INDUCER LOW TERMINAL, AND PLACE BLUE LEAD ON PARK.
4. USE COPPER CONDUCTORS ONLY.
   ++ USE NEC CLASS 2 WIRE.
5. FOR OUTDOOR THERMOSTAT, REMOVE PLUG FROM HARNESS AND CONNECT PLUG FROM OUTDOOR THERMOSTAT TO HARNESS.
6. TO CHANGE AIRFLOW MOVE YELLOW WIRE (COOLING / HEAT PUMP), WHITE WIRE (LOW STAGE GAS), OR BROWN WIRE (HIGH-STAGE GAS) TO SPEED TAP T1, T2, T3, T4, OR T5 AT EVAPORATOR MOTOR. REFER TO UNIT AIRFLOW TABLES FOR TO DETERMINE THE APPROPRIATE SPEED TAP FOR APPLICATION. UNITS SHIPPED WITH YELLOW, WHITE, AND BROWN ON T4, T1, AND T2 RESPECTIVELY.
7. CRANKCASE HEATER AND CRANKCASE HEATER SWITCH FACTORY EQUIPPED WHEN REQUIRED.
8. DOUBLE POLE CONTACTOR SHOWN. SINGLE POLE CONTACTOR COULD BE FACTORY EQUIPPED AS AN ALTERNATE CONFIGURATION.

JUNCTION
TERMINAL
INTERNAL TO INTEGRATED CONTROL
PLUG CONNECTION
IGNITER
SWITCH (PRESS.)

EQUIPMENT GROUND
FIELD GROUND
FIELD SPLICE
SWITCH (TEMP)
OVERCURRENT PROT. DEVICE

DIAGNOSTIC LED - RED	STATUS	CHECK
ON	NORMAL OPERATION	-
OFF	NO POWER OR INTERNAL CONTROL FAULT	CHECK INPUT POWER CHECK FUSE(S) REPLACE CONTROL
1 FLASH	IGNITION FAILURE	GAS FLOW GAS PRESSURE GAS VALVE FLAME SENSOR
2 FLASHES	PRESSURE SWITCH OPEN	CHECK PRESSURE SWITCH CHECK TUBING CHECK VENT MOTOR
3 FLASHES	PRESSURE SWITCH CLOSED WITHOUT INDUCER ON	CHECK PRESSURE SWITCH CHECK WIRING FOR SHORTS
4 FLASHES	OPEN LIMIT SWITCH	CHECK MAIN LIMIT SWITCH CHECK AUXILIARY LIMIT SW. CHECK ROLLOUT LIMIT SW.
5 FLASHES	FALSE FLAME DETECTED	CHECK GAS VALVE CHECK FOR SHORTS IN FLAME SENSOR WIRING
6 FLASHES	COMPR. SHORT CYCLE DELAY	3 MIN COMP. SHORT CYCLE DELAY

DIAGNOSTIC LED - RED	STATUS	CHECK
7 FLASHES	LIMIT OPEN 5 TIMES IN SAME CALL FOR HEAT	CHECK MAIN LIMIT SWITCH CHECK AUXILIARY LIMIT SW.
8 FLASHES	IDT/ODT OPEN	CHECK JUMPER BETWEEN 1 AND 4 ON 6-CIRCUIT CONNECTOR CHECK OPTIONAL REFRIGERANT SWITCHES
9 FLASHES	PSW/LOC OPEN	CHECK REFRIGERANT SWITCHES FOR LOSS OF CHARGE OR HIGH HEAD PRESSURE

DIAGNOSTIC LED - AMBER	STATUS	CHECK
OFF	NO FLAME PRESENT	-
ON	NORMAL FLAME PRESENT	-
1 FLASH	LOW FLAME SIGNAL	GAS FLOW GAS PRESSURE GAS VALVE FLAME SENSOR
2 FLASHES	FALSE FLAME DETECTED	CHECK GAS VALVE CHECK FOR SHORTS IN FLAME SENSOR WIRING

0140G04501-A

Wiring is subject to change. Always refer to the wiring diagram on the unit for the most up-to-date wiring.

WARNING ***High Voltage:*** Disconnect all power before servicing or installing this unit. Multiple power sources may be present. Failure to do so may cause property damage, personal injury, or death.

Accessory Description	Item Number	
	Medium Chassis	Large Chassis
Concentric Kit	CDK36	CDK4872
Downflow Economizer	DDNECNJPGMM	DDNECNJPGML
Downflow Internal Filter Rack (with Economizer)	DDNIFRPGMM	N/A (built into economizer)
Downflow Internal Filter Rack (no Economizer)	DDNIFRPGA	DDNIFRPGA
Downflow Manual Damper	DDN25FDPGCHMM	DDN25FDPGCHML
Downflow Motorized Damper	DDN25MFDPGCHMM	DDN25MFDPGCHML
Downflow Square to Round	SQRPG101/102	SQRPG103
Economizer Wiring Harness	0259G00215	0259G00215
External Horizontal Filter Rack	DPHFRA	DPHFRA
High-Altitude Kit	HA-03	HA-03
Horizontal Duct Cover	20464501NGK	20464502NGK
Horizontal Economizer	DHZECNJPGCHM	DHZECNJPGCHL
Horizontal Manual Damper	DHZ25FDPGCHMM	DHZ25FDPGCHML
Horizontal Motorized Damper	DHZ25MFDPGCHMM	DHZ25MFDPGCHML
Horizontal Square to Round	SQRPGH101/102	SQRPGH103
Internal Horizontal Filter Rack	DHZIFRPGCHA	DHZIFRPGCHA
LP Conversion Kit	LPM-08	LPM-08
Outdoor Thermostat with Housing	OTDFPKG-01	OTDFPKG-01
Roof Curb	D14CRBPGCHMA	D14CRBPGCHMA

Our continuing commitment to quality products may mean a change in specifications without notice.
©2021 **DAIKIN MANUFACTURING COMPANY, L.P.** • Houston, Texas • Printed in the USA.