# DHG Commercial

## R-32 High-Efficiency Gas/Electric Packaged Rooftop Unit DHG Commercial 7.5 - 12.5 Nominal Tons

### Up to 17.5 IEER / 12.5 EER

20 YEAR HEAT EXCHANGER LIMITED WARRANTY*

5 YEAR PARTS LIMITED WARRANTY*

Intertek

AHRI CERTIFIED

ISO 9001

ISO 14001 CERTIFIED ENVIRONMENTAL MANAGEMENT SYSTEM

R32

*Complete warranty details available from your local distributor or manufacturer's representative or at www.daikincomfort.com or www.daikinac.com



Supersedes 11/24

# Our Perfect Package:

## Harnessing energy-efficient performance, proven technology, and enhanced comfort for life.

Since becoming the first company in Japan to manufacture packaged air conditioning systems, in 1951, Daikin has supported comfortable indoor living based on the strengths and technologies that have led to the growth of the company becoming one of the world's largest manufacturers of HVAC products, systems and refrigerants.

Today, as a comprehensive global manufacturer of HVAC products and systems, the Daikin brand is committed to being recognized as a truly global and excellent company capable of continually creating new value for its customers. The company plans to pursue sustainable growth and foster business operations that consistently harmonize with the goals of improving indoor comfort.

The group philosophy of the company includes:

- Creating new value continuously for customers
- Developing world leading energy-saving technology
- Being a flexible and dynamic organization
- Allowing employees to be the driving force for the success of the company
- Fostering an atmosphere of best practices, boldness, and innovation
- Thinking and acting globally

# Contents


| | | |
|---|---|---|
| 2 | **Introduction** | 2 |
| 4 | **Nomenclature** | 4 |
| 5 | **Features and Benefits** | 5 |
| | Applications | 8 |
| | Serviceability | 8 |
| 9 | **Product Specifications** | 9 |
| | Coil Dimension | 18 |
| | AHRI Ratings | 18 |
| | Sound Data | 18 |
| 19 | **Dimensional Data** | 19 |
| 20 | **Expanding Cooling Data** | 20 |
| 28 | **Heating Data** | 28 |
| 29 | **Air Flow** | 29 |
| 77 | **DDC Airflow** | 77 |
| 92 | **Static Pressure** | 92 |
| 93 | **Electrical Data** | 93 |
| 96 | **Wiring Diagrams** | 96 |
| 102 | **Electrical Connections** | 102 |
| | Unit Clearances | 102 |
| 103 | **Installation** | 103 |
| | Weights | 103 |


For details on accessories refer to document **PM-LC-ACCESSORIES**

# Nomenclature

| D | H | G | 120 | 7 | S | 400 | C | A | A | X | X | X | X | X | X | X | X | A | * |
|---|---|---|---|---|---|---|---|---|---|---|---|---|---|---|---|---|---|---|---|
| 1 | 2 | 3 | 4,5,6 | 7 | 8 | 9,10,11 | 12 | 13 | 14 | 15 | 16 | 17 | 18 | 19 | 20 | 21 | 22 | 23 | 24 |

**Revision Levels**
Major & Minor

**Brand**
D Daikin

**Configuration**
S R 32 Standard Efficiency
H R 32 High Efficiency

**Application**
C Cooling
G Gas Heat
H Heat Pump

X No Options

**ERW, PE Connection**
X No Options
B Single-point power connection for Power Exhaust

**Nominal Cooling Capacity**

| | | | |
|---|---|---|---|
| 036 | 3 Tons | 102 | 8½ Tons |
| 048 | 4 Tons | 120 | 10 Tons |
| 060 | 5 Tons | 150 | 12½ tons |
| 072 | 6 Tons | 180 | 15 Tons |
| 090 | 7½ Tons | 240 | 20 Tons |
| | | 300 | 25 Tons |

**IAQ**
X No Options

**Voltage**

| | | | |
|---|---|---|---|
| 1 | 208-230/1/60 | 4 | 460/3/60 |
| 3 | 208-230/3/60 | 7 | 575/3/60 |

**Service Options**
X No Options
A Powered convenience outlet
B Non-powered convenience outlet
C Hinge Panels
D Hinged Panels and Powered convenience outlet
E Hinged Panels and non-powered convenience outlet

**Supply Fan/Drive Type/Motor**
D Direct Drive - Standard Static
L Direct Drive -Medium Static
W Direct Drive - High Static

**Electrical**
X No Options
A Non-Fused Disconnect
B Phase Monitor
C Thru-the-base connections
E Non-Fused Disconnect and Phase Monitor
F Non-Fused Disconnect and Thru-the-base connectons
H Phase Monitor and Thru-the-base connections
L Non-Fused Disconnect, Thru-the-base connectons and Phase Monitor

**Nominal Heating Capacity**

| AC Field and Factory-Installed Electric Heat | | | | Electric Heat w/ SCR controls | | | |
|---|---|---|---|---|---|---|---|
| 045 | 45,000 BTU/h | 240 | 240,000 BTU/h | S05 | 5kW | S21 | 20 kW |
| 060 | 60,000 BTU/h | 260 | 260,000 BTU/h | S10 | 10 kW | S22 | 20 kW |
| 070 | 70,000 BTU/h | 350 | 350,000 BTU/h | S15 | 15 kW | S25 | 25 kW |
| 080 | 80,000 BTU/h | 360 | 360,000 BTU/h | S16 | 15 kW | S30 | 30 kW |
| 090 | 90,000 BTU/h | 400 | 400,000 BTU/h | S18 | 18 kW | S31 | 30 kW |
| 100 | 100,000 BTU/h | 480 | 480,000 BTU/h | S20 | 20 kW | S45 | 45 kW |
| 115 | 115,000 BTU/h | | | | | S46 | 45 kW |
| 125 | 125,000 BTU/h | **A/C H/P Factory-Installed** | | | | S60 | 60 kW |
| 130 | 130,000 BTU/h | **Electric Heat** | | | | S75 | 75kW |
| 140 | 140,000 BTU/h | XXX | No Heat | | | | |
| 150 | 150,000 BTU/h | 005 | 5kW | 030 | 30 kW | | |
| 180 | 180,000 BTU/h | 010 | 10 kW | 045 | 45 kW | | |
| 210 | 210,000 BTU/h | 015 | 15 kW | 060 | 60 kW | | |
| 225 | 225,000 BTU/h | 020 | 20 kW | 075 | 75kW | | |

*See product specifications for heat size(s) available for each capacity.*

**Economizer**
X No Options
A Ultra Low-Leak Downflow Economizer w/ Enthalpy Sensor
C Ultra Low-Leak Internal Horizontal Economizer w/ Enthalpy Sensor
E Ultra Low-Leak Downflow Economizer for DDC controls w/ Enthalpy Sensor
F Ultra Low-Leak Horizontal Economizer for DDC controls w/ Enthalpy Sensor
G Ultra Low-Leak Downflow Economizer w/ Dry Bulb Sensor
J Ultra Low-Leak Internal Horizontal Economizer w/ Dry Bulb Sensor
L Ultra Low-Leak Downflow Economizer for DDC controls w/ Dry Bulb Sensor
M Ultra Low-Leak Horizontal Economizer for DDC controls w/ Dry Bulb Sensor

**Refrigeration Systems**
A Single stage cooling modes
C Two stage cooling modes
F Two stage cooling modes with Hot Gas Reheat and Low-ambient control
G Single stage cooling mode with Low-ambient controller
H Two stage cooling mode with Low-ambient controller

**Coils, Hail guard**
X No Options
C Hail Guard

**Sensors**
D R32 Sensor
E RA Smoke Detector
F SA Smoke Detector
G RA & SA Smoke Detector

**Heat Exchanger**
X No options
A Standard Aluminized Exchanger
S Stainless Steel Exchanger
U Ultra Low NoX

**Controls**
A Electromechanical controls
C DDC w/ BACnet™ interface

## AC Stocking Models

Daikin 7.5-12.5 Ton

| Model Number | Code String | Model Number | Code String | Model Number | Code String |
|---|---|---|---|---|---|
| DHG0903DH00001S | DHG0903D225CAADXXXXXXXAA | DHG1027DH00001S | DHG1027D225CAADXXXXXXXAA | DHG1504DH00001S | DHG1504D240CAADXXXXXXXAA |
| DHG0903DL00001S | DHG0903D130CAADXXXXXXXAA | DHG1027DL00001S | DHG1027D130CAADXXXXXXXAA | DHG1504DL00001S | DHG1504D130CAADXXXXXXXAA |
| DHG0903DM00001S | DHG0903D180CAADXXXXXXXAA | DHG1027DM00001S | DHG1027D180CAADXXXXXXXAA | DHG1504DM00001S | DHG1504D180CAADXXXXXXXAA |
| DHG0904DH00001S | DHG0904D225CAADXXXXXXXAA | DHG1203DH00001S | DHG1203D240CAADXXXXXXXAA | DHG1507DH00001S | DHG1507D240CAADXXXXXXXAA |
| DHG0904DL00001S | DHG0904D130CAADXXXXXXXAA | DHG1203DL00001S | DHG1203D130CAADXXXXXXXAA | DHG1507DL00001S | DHG1507D130CAADXXXXXXXAA |
| DHG0904DM00001S | DHG0904D180CAADXXXXXXXAA | DHG1203DM00001S | DHG1203D180CAADXXXXXXXAA | DHG1507DM00001S | DHG1507D180CAADXXXXXXXAA |
| DHG0907DH00001S | DHG0907D225CAADXXXXXXXAA | DHG1204DH00001S | DHG1204D240CAADXXXXXXXAA | DHG1503WH00001F | DHG1503W240CAADXXXXXXXAA |
| DHG0907DL00001S | DHG0907D130CAADXXXXXXXAA | DHG1204DL00001S | DHG1204D130CAADXXXXXXXAA | DHG1503WL00001F | DHG1503W130CAADXXXXXXXAA |
| DHG0907DM00001S | DHG0907D180CAADXXXXXXXAA | DHG1204DM00001S | DHG1204D180CAADXXXXXXXAA | DHG1503WM00001F | DHG1503W180CAADXXXXXXXAA |
| DHG1023DH00001S | DHG1023D225CAADXXXXXXXAA | DHG1207DH00001S | DHG1207D240CAADXXXXXXXAA | DHG1504WH00001F | DHG1504W240CAADXXXXXXXAA |
| DHG1023DL00001S | DHG1023D130CAADXXXXXXXAA | DHG1207DL00001S | DHG1207D130CAADXXXXXXXAA | DHG1504WL00001F | DHG1504W130CAADXXXXXXXAA |
| DHG1023DM00001S | DHG1023D180CAADXXXXXXXAA | DHG1207DM00001S | DHG1207D180CAADXXXXXXXAA | DHG1504WM00001F | DHG1504W180CAADXXXXXXXAA |
| DHG1024DH00001S | DHG1024D225CAADXXXXXXXAA | DHG1503DH00001S | DHG1503D240CAADXXXXXXXAA | DHG1507WH00001F | DHG1507W240CAADXXXXXXXAA |
| DHG1024DL00001S | DHG1024D130CAADXXXXXXXAA | DHG1503DL00001S | DHG1503D130CAADXXXXXXXAA | DHG1507WL00001F | DHG1507W130CAADXXXXXXXAA |
| DHG1024DM00001S | DHG1024D180CAADXXXXXXXAA | DHG1503DM00001S | DHG1503D180CAADXXXXXXXAA | DHG1507WM00001F | DHG1507W180CAADXXXXXXXAA |

Daikin Packaged Rooftop Units (RTUs) are built to perform, with features and options that help provide low installation and operation costs, superior indoor air quality, efficient operation, and longevity.

## Installation

Daikin Packaged units are designed with fast and easy installation in mind and are ideal for both new construction and retrofit projects. Our packaged rooftop units are built to be a direct replacement for most rooftop units on the field without the need of a curb adapter, to be able to replace the unit in a shorter time and at a lower cost (compared to the previous design).

## Cabinet Construction

Daikin packaged rooftop units are made with high quality galvanized steel with a powder-paint finish to provide higher corrosion resistance.

- Easy accessibility using our tool-less filter access
- The interior surface in the indoor air section is fully insulated to prevent sweating and thermal losses, using our foil face fiberglass insulation which also omits exposed filter fibers into the airstream.
- 1" Raised flanged edges around the supply and return offer easy installation for the duct connections.

- The full perimeter base rail is built using heavy gauge galvanized steel for a stronger structural installation. The base rails are a minimum of 3½" tall and include holes to allow for overhead rigging and lifting with forklifts.
- Electrical lines and gas lines can be brought through the base of the unit or through the horizontal knockout for easy installation and accessibility on the field.

## Compressor

High performance, low noise scroll compressors to match the required total load.

- Resiliently factory-mounted on rubber grommets for vibration isolation
- Refrigeration circuit includes both low- and high-pressure transducer, high pressure safety switch and temperature sensors for the suction and discharge lines.
- Unit is factory charged with environmentally friendly Low GWP R-32 refrigerant.
- Compressor location outside the condenser section to avoid air bypass.
- Internal overload protection included with compressor.
- Dual single-stage scroll compressor for partial load applications.

## Supply Fan

The direct-drive with airfoil single width, single inlet (SWSI) Class II construction supply fan with aluminum fan +blades provides efficient and quiet operation at wide ranging static pressure and air flow requirements.

- Fan wheel is continuously welded to the hub plate and end rim for long lasting reliable operation.
- Direct-drive ECM motor removes the need for belts, sheaves, or bearings and its permanently lubricated motors provides low maintenance cost.
- Each fan assembly is dynamically trim balanced at the factory before shipment for quick start-up and efficient operation.
- Electromechanical integrated controls modulate the supply fan motor
- Motor with thermal overload is provided for motor long lasting operation.

## Coils

All units use large face area outdoor coils. These coils are constructed with seamless copper tubes, mechanically bonded into aluminum plate-type fins with full drawn collars to completely cover the tubes for high operating efficiencies.

The indoor coil section is installed in a draw through configuration to provide better dehumidification.

» Coils are factory pressure tested to ensure pressure and leak integrity.

» Copper tube / aluminum fin coils on condenser and evaporator

» 5mm Smart Coil Technology on all condenser coils for improved performance and reduced refrigerant load.

## Controls and Wiring

Packaged rooftop units come equipped with a well-organized, large, easy to use, weatherproof internal control box with easy access, for a better user experience.

» Units are factory-wired with labeled color-coded wires and complete 24-volt Electromechanical controls package.

» Terminal blocks are provided as standard for easy installation and field power wiring.

» The Daikin iLINQ Controller is a factory-installed solution to provide intelligent control for Daikin Light Commercial rooftop units* (RTUs). iLINQ provides physical inputs and outputs to control and monitor the RTU and features a graphic web interface for remote access (via a computer or tablet). Equipped with built-in BACnet™ IP and MS/TP interface or it can be used with an optional LonWorks® card that is available to integrate the Daikin RTU with building automation systems (BMS).

## Filtration

Unit provides a draw-through filter section as standard for better air quality and long lasting component maintenance.

» Filters installed on the units are standard off the shelf sizes for easy replacement.

» One size filter per unit for low maintenance cost and easy replacement.

» Tool-less filter access for easy and fast filter replacement and service.

## Heating Section

Wide range of natural gas selections effectively handle most comfort heating demand from morning warm-up control to full heat, all available with Daikin's Wrinkle Bend heat exchanger technology.

## Gas Furnace

ETL certified heating modules provide a custom match to specific design requirement.

» Wrinkle Bend Technology available on all Daikin gas heat exchangers. The Wrinkle Bend Technology reduces the manufacturing stress that leads to defects and pinholes in the tubes at the same time as it increases the gas turbulence to amplify the heat transfer.

» All 3-Phase models have a minimum 80% T.E. (Thermal Efficiency)

» User has the flexibility to order heat exchanger tubes with 20 Gauge, G160, aluminized steel or stainless steel to meet your application needs.

» The furnace has a tubular design with in-shot gas burner manifold and is installed downstream of the supply fan.

» The module contains an induced draft fan that will maintain a negative pressure in the heat exchanger tubes for the removal of the flue gases to protect indoor air quality.

» Each burner module provides flame roll-out safety protection switches and a high temperature limit switch for reliable operation.

» Induced draft fan includes an airflow safety switch to prevent heating operation in the event of no airflow for occupant safety.

» All burner assemblies are factory tested and adjusted prior to shipment.

» Heating control is fully integrated into the unit's control system for quick start-up and reliable control.

» Optional field installed LP kits are available for staged heating modules as well as high altitude kits.

## Electrical

Units are completely wired and tested at the factory to provide faster commissioning and start-up.

» Wiring complies with NEC requirements and all applicable UL standards.

» For ease of use, wiring and electrical components are number coded and labeled according to the electrical diagram.

» A 115 V GFI convenience outlet requiring independent power supply for the receptacle is optional.

» An optional unit powered 20 amp 115 V convenience outlet, complete with factory mounted transformer, disconnect switch, and primary and secondary overload protection, eliminates the need to pull a separate 115 V power source.

» Supply air fan, compressor, and condenser fan motor branch circuits have individual short circuit protection. Unit includes knockouts in the bottom of the main control panels for field wiring entrance.

» A single-point power connection with power block is standard and a terminal board is provided for connecting low voltage control wiring.

» For better serviceability an optional non-fused disconnect switch can be installed inside the control panel and operated by an externally mounted handle to disconnect the electrical power at the unit.

## Daikin Modulating Hot Gas Reheat Dehumidification

Using a space sensor in conjunction with the Daikin iLINQ Controller and Reheat Module, the unit can initiate a Dehumidification Mode as the space humidity rises above setpoint. In this mode, the modulating valve diverts a percentage of the hot gas to the reheat coil as required in order to maintain supply air temperature requirements while lowering the space relative humidity. The modulating valve system allows smooth transition into dehumidification and longer run time at a steady supply air temperature. The indoor fan will operate at high and low speed during dehumidification mode.

DAIKIN

## Applications

Daikin Rooftop units are intended for comfort cooling applications in normal heating, ventilating, and air conditioning. Consult your local Daikin sales representative for applications involving operations at high ambient temperatures, high altitudes, non-cataloged voltages, or for job-specific unit selections that fall outside of the range of the catalog tables.

For proper operation, units should be rigged in accordance with instructions stated on the installation manual. Fire dampers, if required, must be installed in the ductwork according to local and/or state codes. No space is allowed for these dampers in the unit.

Follow factory check, test and start procedures explicitly to achieve satisfactory start-up and operation.

Most rooftop applications take advantage of the significant energy savings provided with economizer operation. When an economizer system is used, mechanical refrigeration is typically not required below an ambient temperature of 50°F.

## Serviceability

Daikin packaged rooftop units are built with serviceability in mind, designed to make future maintenance and service on the unit easy and accessible.

- Our packaged rooftop units offer a slide out blower to facilitate the access and removal of the fan.
- Filter panels on the small chassis line offer tool-less access for easy maintenance.
- Independent compressor outside of the air bypass to eliminate component blockage and provide easy access.
- Labeled field connections, color coded and continuously marked wire to identify point-to-point component connections.
- All 7.5- 12.5 ton units are designed for convertible airflow orientation to serve downflow or horizontal applications. Every unit ships prepared to convert to horizontal orientation in the field if required.
- Condenser clean out from inside-out.
- Easy access to gas valves and control panel.

| Model | DHG0903DL00001S | DHG0903DM00001S | DHG0903DH00001S | DHG0904DL00001S | DHG0904DM00001S |
|---|---|---|---|---|---|
| **COOLING CAPACITY** | | | | | |
| Total, BTU/h | 90,000 | 90,000 | 90,000 | 90,000 | 90,000 |
| IEER / EER | 17.5/12.5 | 17.5/12.5 | 17.5/12.5 | 17.5/12.5 | 17.5/12.5 |
| AHRI Reference # | 216436785 | 216436785 | 216436785 | 216436786 | 216436786 |
| **HEATING CAPACITY** | | | | | |
| Heat Range | LOW | MEDIUM | HIGH | LOW | MEDIUM |
| No. of Burners | 5 | 6 | 7 | 5 | 6 |
| High Stage Input / Output (KBTU/H) | 130/105.3 | 180/145.8 | 225/182.25 | 130/105.3 | 180/145.8 |
| Low Stage Input / Output (KBTU/H) | 97.5/79 | 135/109.35 | 168.75/136.69 | 97.5/79 | 135/109.35 |
| Thermal Efficiency (T.E.) | 81% | 81% | 81% | 81% | 81% |
| Annual Fuel Utilization Efficiency (AFUE) | N/A | N/A | N/A | N/A | N/A |
| High Stage Temperature Rise Range (°F) | 25 - 55 | 25 - 55 | 40 - 70 | 25 - 55 | 25 - 55 |
| Low Stage Temperature Rise Range (°F) | 25 - 55 | 25 - 55 | 40 - 70 | 25 - 55 | 25 - 55 |
| **EVAPORATOR MOTOR COIL** | | | | | |
| Motor Type | DIRECT DRIVE | DIRECT DRIVE | DIRECT DRIVE | DIRECT DRIVE | DIRECT DRIVE |
| External Static Pressure (ESP) | STANDARD | STANDARD | STANDARD | STANDARD | STANDARD |
| Wheel Dia. X Width | Ø15.12 X 12.62 | Ø15.12 X 12.62 | Ø15.12 X 12.62 | Ø15.12 X 12.62 | Ø15.12 X 12.62 |
| Indoor Nominal CFM | 3000 | 3000 | 3000 | 3000 | 3000 |
| RPM | 300-1600 | 300-1600 | 300-1600 | 300-1600 | 300-1600 |
| Indoor Horsepower | 2.4 | 2.4 | 2.4 | 2.4 | 2.4 |
| Filter Size (in) | 16 X 25 X 2 (4) | 16 X 25 X 2 (4) | 16 X 25 X 2 (4) | 16 X 25 X 2 (4) | 16 X 25 X 2 (4) |
| Drain Size (NPT) | 3/4 | 3/4 | 3/4 | 3/4 | 3/4 |
| R32 Refrigerant Charge (oz.) | 122.4/115 | 122.4/115 | 122.4/115 | 122.4/115 | 122.4/115 |
| Evaporator Coil Face Area ($ft^2$) | 12.8 | 12.8 | 12.8 | 12.8 | 12.8 |
| Rows Deep/ Fins per Inch | 4/16 | 4/16 | 4/16 | 4/16 | 4/16 |
| **CONDENSER FAN/COIL** | | | | | |
| Quantity of Condenser Fan Motors | 2 | 2 | 2 | 2 | 2 |
| RPM (High/Low stage) | 1122 | 1122 | 1122 | 1050 | 1050 |
| Outdoor Horsepower | 1/3 | 1/3 | 1/3 | 1/3 | 1/3 |
| Fan Diameter/ # Fan Blades | 22/3 | 22/3 | 22/3 | 22/3 | 22/3 |
| Face Area ($ft^2$) | 35.3 | 35.3 | 35.3 | 35.3 | 35.3 |
| Rows Deep / Fins per Inch | 2/28±1 | 2/28±1 | 2/28±1 | 2/28±1 | 2/28±1 |
| **COMPRESSOR** | | | | | |
| Quantity / Type / Stages | 2/SCROLL/1 | 2/SCROLL/1 | 2/SCROLL/1 | 2/SCROLL/1 | 2/SCROLL/1 |
| Compressor RLA / LRA | 12.2/120 | 12.2/120 | 12.2/120 | 5.8/55.1 | 5.8/55.1 |
| **ELECTRICAL DATA** | | | | | |
| Voltage-Phase-Frequency | 208/230-3-60 | 208/230-3-60 | 208/230-3-60 | 460-3-60 | 460-3-60 |
| Indoor Blower FLA | 8 | 8 | 8 | 5.4 | 5.4 |
| Max External Static (In. W.C.) | 0.8 | 0.8 | 0.8 | 0.8 | 0.8 |
| Outdoor Fan FLA | 2 | 2 | 2 | 0.85 | 0.85 |
| Min. Circuit Ampacity[1] | 39.4/39.4 | 39.4/39.4 | 39.4/39.4 | 20.1 | 20.1 |
| Max. Overcurrent Protection (A)[2] | 50/50 | 50/50 | 50/50 | 25 | 25 |
| Power Supply Conduit Hole Dia. (in) | 1.375 | 1.375 | 1.375 | 1.375 | 1.375 |
| Low-VoltageConduit Hole Dia. (in) | 0.875 | 0.875 | 0.875 | 0.875 | 0.875 |
| **OPERATING WEIGHT (LBS.)** | | | | | |
| Operating Weight (lbs) | 1253 | 1253 | 1253 | 1253 | 1253 |
| **SHIPPING WEIGHT (LBS.)** | | | | | |
| Ship Weight (lbs) | 1319 | 1319 | 1319 | 1319 | 1319 |

[1] Wire size should be determined in accordance with National Electrical Codes. Extensive wire runs will require larger wire sizes.
[2] May use fuses or HACR-type circuit breakers of the same size as noted.
Note: Always check the S&R plate for electrical data on the unit being installed.

| Model | DHG0904DH00001S | DHG0907DL00001S | DHG0907DM00001S | DHG0907DH00001S |
|---|---|---|---|---|
| **COOLING CAPACITY** | | | | |
| Total, BTU/h | 90,000 | 90,000 | 90,000 | 90,000 |
| IEER / EER | 17.5/12.5 | 17.5/12.5 | 17.5/12.5 | 17.5/12.5 |
| AHRI Reference # | 216436786 | 216436787 | 216436787 | 216436787 |
| **HEATING CAPACITY** | | | | |
| Heat Range | HIGH | LOW | MEDIUM | HIGH |
| No. of Burners | 7 | 5 | 6 | 7 |
| High Stage Input / Output (KBTU/H) | 225/182.25 | 130/105.3 | 180/145.8 | 225/182.25 |
| Low Stage Input / Output (KBTU/H) | 168.75/136.69 | 97.5/79 | 135/109.35 | 168.75/136.69 |
| Thermal Efficiency (T.E.) | 81% | 81% | 81% | 81% |
| Annual Fuel Utilization Efficiency (AFUE) | N/A | N/A | N/A | N/A |
| High Stage Temperature Rise Range (°F) | 40 - 70 | 25 - 55 | 25 - 55 | 40 - 70 |
| Low Stage Temperature Rise Range (°F) | 40 - 70 | 25 - 55 | 25 - 55 | 40 - 70 |
| **EVAPORATOR MOTOR COIL** | | | | |
| Motor Type | DIRECT DRIVE | DIRECT DRIVE | DIRECT DRIVE | DIRECT DRIVE |
| External Static Pressure (ESP) | STANDARD | STANDARD | STANDARD | STANDARD |
| Wheel Dia. X Width | Ø15.12 X 12.62 | Ø15.12 X 12.62 | Ø15.12 X 12.62 | Ø15.12 X 12.62 |
| Indoor Nominal CFM | 3000 | 3000 | 3000 | 3000 |
| RPM | 300-1600 | 300-1600 | 300-1600 | 300-1600 |
| Indoor Horsepower | 2.4 | 2.4 | 2.4 | 2.4 |
| Filter Size (in) | 16 X 25 X 2 (4) | 16 X 25 X 2 (4) | 16 X 25 X 2 (4) | 16 X 25 X 2 (4) |
| Drain Size (NPT) | 3/4 | 3/4 | 3/4 | 3/4 |
| R32 Refrigerant Charge (oz.) | 122.4/115 | 122.4/115 | 122.4/115 | 122.4/115 |
| Evaporator Coil Face Area ($ft^2$) | 12.8 | 12.8 | 12.8 | 12.8 |
| Rows Deep/ Fins per Inch | 4/16 | 4/16 | 4/16 | 4/16 |
| **CONDENSER FAN/COIL** | | | | |
| Quantity of Condenser Fan Motors | 2 | 2 | 2 | 2 |
| RPM (High/Low stage) | 1050 | 1050 | 1050 | 1050 |
| Outdoor Horsepower | 1/3 | 1/3 | 1/3 | 1/3 |
| Fan Diameter/ # Fan Blades | 22/3 | 22/3 | 22/3 | 22/3 |
| Face Area ($ft^2$) | 35.3 | 35.3 | 35.3 | 35.3 |
| Rows Deep / Fins per Inch | 2/28±1 | 2/28±1 | 2/28±1 | 2/28±1 |
| **COMPRESSOR** | | | | |
| Quantity / Type / Stages | 2/SCROLL/1 | 2/SCROLL/1 | 2/SCROLL/1 | 2/SCROLL/1 |
| Compressor RLA / LRA | 5.8/55.1 | 5.8/41.0 | 5.8/41.0 | 5.8/41.0 |
| **ELECTRICAL DATA** | | | | |
| Voltage-Phase-Frequency | 460-3-60 | 575-3-60 | 575-3-60 | 575-3-60 |
| Indoor Blower FLA | 5.4 | 4 | 4 | 4 |
| Max External Static (In. W.C.) | 0.8 | 0.8 | 0.8 | 0.8 |
| Outdoor Fan FLA | 0.85 | 0.67 | 0.67 | 0.67 |
| Min. Circuit Ampacity[1] | 20.1 | 18.3 | 18.3 | 18.3 |
| Max. Overcurrent Protection (A)[2] | 25 | 20 | 20 | 20 |
| Power Supply Conduit Hole Dia. (in) | 1.375 | 1.375 | 1.375 | 1.375 |
| Low-VoltageConduit Hole Dia. (in) | 0.875 | 0.875 | 0.875 | 0.875 |
| **OPERATING WEIGHT (LBS.)** | | | | |
| Operating Weight (lbs) | 1253 | 1253 | 1253 | 1253 |
| **SHIPPING WEIGHT (LBS.)** | | | | |
| Ship Weight (lbs) | 1319 | 1319 | 1319 | 1319 |

[1] Wire size should be determined in accordance with National Electrical Codes. Extensive wire runs will require larger wire sizes.
[2] May use fuses or HACR-type circuit breakers of the same size as noted.
Note: Always check the S&R plate for electrical data on the unit being installed.

| Model | DHG1023DL00001S | DHG1023DM00001S | DHG1023DH00001S | DHG1024DL00001S | DHG1024DM00001S |
|---|---|---|---|---|---|
| **COOLING CAPACITY** | | | | | |
| Total, BTU/h | 102,000 | 102,000 | 102,000 | 102,000 | 102,000 |
| IEER / EER | 17.5/12.5 | 17.5/12.5 | 17.5/12.5 | 17.5/12.5 | 17.5/12.5 |
| AHRI Reference # | 216436788 | 216436788 | 216436788 | 216436789 | 216436789 |
| **HEATING CAPACITY** | | | | | |
| Heat Range | LOW | MEDIUM | HIGH | LOW | MEDIUM |
| No. of Burners | 5 | 6 | 7 | 5 | 6 |
| High Stage Input / Output (KBTU/H) | 130/105.3 | 180/145.8 | 225/182.25 | 130/105.3 | 180/145.8 |
| Low Stage Input / Output (KBTU/H) | 97.5/79 | 135/109.35 | 168.75/136.69 | 97.5/79 | 135/109.35 |
| Thermal Efficiency (T.E.) | 81% | 81% | 81% | 81% | 81% |
| Annual Fuel Utilization Efficiency (AFUE) | N/A | N/A | N/A | N/A | N/A |
| High Stage Temperature Rise Range (°F) | 25 - 55 | 25 - 55 | 40 - 70 | 25 - 55 | 25 - 55 |
| Low Stage Temperature Rise Range (°F) | 25 - 55 | 25 - 55 | 40 - 70 | 25 - 55 | 25 - 55 |
| **EVAPORATOR MOTOR COIL** | | | | | |
| Motor Type | DIRECT DRIVE | DIRECT DRIVE | DIRECT DRIVE | DIRECT DRIVE | DIRECT DRIVE |
| External Static Pressure (ESP) | STANDARD | STANDARD | STANDARD | STANDARD | STANDARD |
| Wheel Dia. X Width | Ø15.12 X 12.62 | Ø15.12 X 12.62 | Ø15.12 X 12.62 | Ø15.12 X 12.62 | Ø15.12 X 12.62 |
| Indoor Nominal CFM | 3025 | 3025 | 3025 | 3025 | 3025 |
| RPM | 300-1600 | 300-1600 | 300-1600 | 300-1600 | 300-1600 |
| Indoor Horsepower | 2.4 | 2.4 | 2.4 | 2.4 | 2.4 |
| Filter Size (in) | 20 X 25 X 2 (2)<br>25 X 25 X 2(2) | 20 X 25 X 2 (2)<br>25 X 25 X 2(2) | 20 X 25 X 2 (2)<br>25 X 25 X 2(2) | 20 X 25 X 2 (2)<br>25 X 25 X 2(2) | "20 X 25 X 2 (2)<br>25 X 25 X 2(2)" |
| Drain Size (NPT) | 3/4 | 3/4 | 3/4 | 3/4 | 3/4 |
| R32 Refrigerant Charge (oz.) | 123/124 | 123/124 | 123/124 | 123/124 | 123/124 |
| Evaporator Coil Face Area ($ft^2$) | 16.6 | 16.6 | 16.6 | 16.6 | 16.6 |
| Rows Deep/ Fins per Inch | 4/16 | 4/16 | 4/16 | 4/16 | 4/16 |
| **CONDENSER FAN/COIL** | | | | | |
| Quantity of Condenser Fan Motors | 2 | 2 | 2 | 2 | 2 |
| RPM (High/Low stage) | 1050 | 1050 | 1050 | 1050 | 1050 |
| Outdoor Horsepower | 1/3 | 1/3 | 1/3 | 1/3 | 1/3 |
| Fan Diameter/ # Fan Blades | 22/3 | 22/3 | 22/3 | 22/3 | 22/3 |
| Face Area ($ft^2$) | 35.3 | 35.3 | 35.3 | 35.3 | 35.3 |
| Rows Deep / Fins per Inch | 2/28±1 | 2/28±1 | 2/28±1 | 2/28±1 | 2/28±1 |
| **COMPRESSOR** | | | | | |
| Quantity / Type / Stages | 2/SCROLL/1 | 2/SCROLL/1 | 2/SCROLL/1 | 2/SCROLL/1 | 2/SCROLL/1 |
| Compressor RLA / LRA | 6.3/55.0 | 6.3/55.0 | 6.3/55.0 | 6.0/41.0 | 6.4/55.1 |
| **ELECTRICAL DATA** | | | | | |
| Voltage-Phase-Frequency | 208/230-3-60 | 208/230-3-60 | 208/230-3-60 | 460-3-60 | 460-3-60 |
| Indoor Blower FLA | 8 | 8 | 8 | 5.4 | 5.4 |
| Max External Static (In. W.C.) | 0.8 | 0.8 | 0.8 | 0.8 | 0.8 |
| Outdoor Fan FLA | 2 | 2 | 2 | 0.85 | 0.85 |
| Min. Circuit Ampacity[1] | 43.7/43.7 | 43.7/43.7 | 43.7/43.7 | 21.5 | 21.5 |
| Max. Overcurrent Protection (A)[2] | 50/50 | 50/50 | 50/50 | 25 | 25 |
| Power Supply Conduit Hole Dia. (in) | 1.375 | 1.375 | 1.375 | 1.375 | 1.375 |
| Low-VoltageConduit Hole Dia. (in) | 0.875 | 0.875 | 0.875 | 0.875 | 0.875 |
| **OPERATING WEIGHT (LBS.)** | | | | | |
| Operating Weight (lbs) | 1268 | 1268 | 1268 | 1268 | 1268 |
| **SHIPPING WEIGHT (LBS.)** | | | | | |
| Ship Weight (lbs) | 1327 | 1327 | 1327 | 1327 | 1327 |

[1] Wire size should be determined in accordance with National Electrical Codes. Extensive wire runs will require larger wire sizes.
[2] May use fuses or HACR-type circuit breakers of the same size as noted.
Note: Always check the S&R plate for electrical data on the unit being installed.

| Model | DHG1024DH00001S | DHG1027DL00001S | DHG1027DM00001S | DHG1027DH00001S |
|---|---|---|---|---|
| **COOLING CAPACITY** | | | | |
| Total, BTU/h | 102,000 | 102,000 | 102,000 | 102,000 |
| IEER / EER | 17.5/12.5 | 17.5/12.5 | 17.5/12.5 | 17.5/12.5 |
| AHRI Reference # | 216436789 | 216436790 | 216436790 | 216436790 |
| **HEATING CAPACITY** | | | | |
| Heat Range | HIGH | LOW | MEDIUM | HIGH |
| No. of Burners | 7 | 5 | 6 | 7 |
| High Stage Input / Output (KBTU/H) | 225/182.25 | 130/105.3 | 180/145.8 | 225/182.25 |
| Low Stage Input / Output (KBTU/H) | 168.75/136.69 | 97.5/79 | 135/109.35 | 168.75/136.69 |
| Thermal Efficiency (T.E.) | 81% | 81% | 81% | 81% |
| Annual Fuel Utilization Efficiency (AFUE) | N/A | N/A | N/A | N/A |
| High Stage Temperature Rise Range (°F) | 40 - 70 | 25 - 55 | 25 - 55 | 40 - 70 |
| Low Stage Temperature Rise Range (°F) | 40 - 70 | 25 - 55 | 25 - 55 | 40 - 70 |
| **EVAPORATOR MOTOR COIL** | | | | |
| Motor Type | DIRECT DRIVE | DIRECT DRIVE | DIRECT DRIVE | DIRECT DRIVE |
| External Static Pressure (ESP) | STANDARD | STANDARD | STANDARD | STANDARD |
| Wheel Dia. X Width | Ø15.12 X 12.62 | Ø15.12 X 12.62 | Ø15.12 X 12.62 | Ø15.12 X 12.62 |
| Indoor Nominal CFM | 3025 | 3025 | 3025 | 3025 |
| RPM | 300-1600 | 300-1600 | 300-1600 | 300-1600 |
| Indoor Horsepower | 2.4 | 2.4 | 2.4 | 2.4 |
| Filter Size (in) | 20 X 25 X 2 (2)<br>25 X 25 X 2(2) | 20 X 25 X 2 (2)<br>25 X 25 X 2(2) | 20 X 25 X 2 (2)<br>25 X 25 X 2(2) | 20 X 25 X 2 (2)<br>25 X 25 X 2(2) |
| Drain Size (NPT) | 3/4 | 3/4 | 3/4 | 3/4 |
| R32 Refrigerant Charge (oz.) | 123/124 | 123/124 | 123/124 | 123/124 |
| Evaporator Coil Face Area ($ft^2$) | 16.6 | 16.6 | 16.6 | 16.6 |
| Rows Deep/ Fins per Inch | 4/16 | 4/16 | 4/16 | 4/16 |
| **CONDENSER FAN/COIL** | | | | |
| Quantity of Condenser Fan Motors | 2 | 2 | 2 | 2 |
| RPM (High/Low stage) | 1050 | 1050 | 1050 | 1050 |
| Outdoor Horsepower | 1/3 | 1/3 | 1/3 | 1/3 |
| Fan Diameter/ # Fan Blades | 22/3 | 22/3 | 22/3 | 22/3 |
| Face Area ($ft^2$) | 35.3 | 35.3 | 35.3 | 35.3 |
| Rows Deep / Fins per Inch | 2/28±1 | 2/28±1 | 2/28±1 | 2/28±1 |
| **COMPRESSOR** | | | | |
| Quantity / Type / Stages | 2/SCROLL/1 | 2/SCROLL/1 | 2/SCROLL/1 | 2/SCROLL/1 |
| Compressor RLA / LRA | 6.4/55.1 | 5.1/41.0 | 5.1/41.0 | 5.1/41.0 |
| **ELECTRICAL DATA** | | | | |
| Voltage-Phase-Frequency | 460-3-60 | 575-3-60 | 575-3-60 | 575-3-60 |
| Indoor Blower FLA | 5.4 | 4 | 4 | 4 |
| Max External Static (In. W.C.) | 0.8 | 0.8 | 0.8 | 0.8 |
| Outdoor Fan FLA | 0.85 | 0.67 | 0.67 | 0.67 |
| Min. Circuit Ampacity[1] | 21.5 | 16.9 | 16.9 | 16.9 |
| Max. Overcurrent Protection (A)[2] | 25 | 20 | 20 | 20 |
| Power Supply Conduit Hole Dia. (in) | 1.375 | 1.375 | 1.375 | 1.375 |
| Low-VoltageConduit Hole Dia. (in) | 0.875 | 0.875 | 0.875 | 0.875 |
| **OPERATING WEIGHT (LBS.)** | | | | |
| Operating Weight (lbs) | 1268 | 1268 | 1268 | 1268 |
| **SHIPPING WEIGHT (LBS.)** | | | | |
| Ship Weight (lbs) | 1327 | 1327 | 1327 | 1327 |

[1] Wire size should be determined in accordance with National Electrical Codes. Extensive wire runs will require larger wire sizes.
[2] May use fuses or HACR-type circuit breakers of the same size as noted.
Note: Always check the S&R plate for electrical data on the unit being installed.

| Model | DHG1203DL00001S | DHG1203DM00001S | DHG1203DH00001S | DHG1204DL00001S | DHG1204DM00001S |
|---|---|---|---|---|---|
| **COOLING CAPACITY** | | | | | |
| Total, BTU/h | 116,000 | 116,000 | 116,000 | 116,000 | 116,000 |
| IEER / EER | 17/12.5 | 17/12.5 | 17/12.5 | 17/12.5 | 17/12.5 |
| AHRI Reference # | 216436791 | 216436791 | 216436791 | 216436792 | 216436792 |
| **HEATING CAPACITY** | | | | | |
| Heat Range | LOW | MEDIUM | HIGH | LOW | MEDIUM |
| No. of Burners | 5 | 6 | 7 | 5 | 6 |
| High Stage Input / Output (KBTU/H) | 130/105.3 | 180/145.8 | 240/194.4 | 130/105.3 | 180/145.8 |
| Low Stage Input / Output (KBTU/H) | 97.5/79 | 135/109.35 | 180/145.8 | 97.5/79 | 135/109.35 |
| Thermal Efficiency (T.E.) | 81% | 81% | 81% | 81% | 81% |
| Annual Fuel Utilization Efficiency (AFUE) | N/A | N/A | N/A | N/A | N/A |
| High Stage Temperature Rise Range (°F) | 25 - 55 | 25 - 55 | 30 - 60 | 25 - 55 | 25 - 55 |
| Low Stage Temperature Rise Range (°F) | 25 - 55 | 25 - 55 | 30 - 60 | 25 - 55 | 25 - 55 |
| **EVAPORATOR MOTOR COIL** | | | | | |
| Motor Type | DIRECT DRIVE | DIRECT DRIVE | DIRECT DRIVE | DIRECT DRIVE | DIRECT DRIVE |
| External Static Pressure (ESP) | STANDARD | STANDARD | STANDARD | STANDARD | STANDARD |
| Wheel Dia. X Width | Ø15.12 X 15.00 | Ø15.12 X 15.00 | Ø15.12 X 15.00 | Ø15.12 X 15.00 | Ø15.12 X 15.00 |
| Indoor Nominal CFM | 3500 | 3500 | 3500 | 3500 | 3500 |
| RPM | 300-1600 | 300-1600 | 300-1600 | 300-1600 | 300-1600 |
| Indoor Horsepower | 2.4 | 2.4 | 2.4 | 2.4 | 2.4 |
| Filter Size (in) | 20 X 25 X 2 (2)<br>25 X 25 X 2(2) | 20 X 25 X 2 (2)<br>25 X 25 X 2(2) | 20 X 25 X 2 (2)<br>25 X 25 X 2(2) | 20 X 25 X 2 (2)<br>25 X 25 X 2(2) | 20 X 25 X 2 (2)<br>25 X 25 X 2(2) |
| Drain Size (NPT) | 3/4 | 3/4 | 3/4 | 3/4 | 3/4 |
| R32 Refrigerant Charge (oz.) | 142/146 | 142/146 | 142/146 | 142/146 | 142/146 |
| Evaporator Coil Face Area ($ft^2$) | 16.6 | 16.6 | 16.6 | 16.6 | 16.6 |
| Rows Deep/ Fins per Inch | 4/16 | 4/16 | 4/16 | 4/16 | 4/16 |
| **CONDENSER FAN/COIL** | | | | | |
| Quantity of Condenser Fan Motors | 2 | 2 | 2 | 2 | 2 |
| RPM (High/Low stage) | 1122 | 1122 | 1122 | 1050 | 1050 |
| Outdoor Horsepower | 1/3 | 1/3 | 1/3 | 1/3 | 1/3 |
| Fan Diameter/ # Fan Blades | 22/3 | 22/3 | 22/3 | 22/3 | 22/3 |
| Face Area ($ft^2$) | 39.6 | 39.6 | 39.6 | 39.6 | 39.6 |
| Rows Deep / Fins per Inch | 2/28±1 | 2/28±1 | 2/28±1 | 2/28±1 | 2/28±1 |
| **COMPRESSOR** | | | | | |
| Quantity / Type / Stages | 2/SCROLL/1 | 2/SCROLL/1 | 2/SCROLL/1 | 2/SCROLL/1 | 2/SCROLL/1 |
| Compressor RLA / LRA | 15.4/156.4 | 15.4/156.4 | 15.4/156.4 | 7.7/69.0 | 7.7/69.0 |
| **ELECTRICAL DATA** | | | | | |
| Voltage-Phase-Frequency | 208/230-3-60 | 208/230-3-60 | 208/230-3-60 | 460-3-60 | 460-3-60 |
| Indoor Blower FLA | 8 | 8 | 8 | 5.4 | 5.4 |
| Max External Static (In. W.C.) | 0.8 | 0.8 | 0.8 | 0.8 | 0.8 |
| Outdoor Fan FLA | 2 | 2 | 2 | 0.85 | 0.85 |
| Min. Circuit Ampacity[1] | 46.6/46.6 | 46.6/46.6 | 46.6/46.6 | 24.4 | 24.4 |
| Max. Overcurrent Protection (A)[2] | 60/60 | 60/60 | 60/60 | 30 | 30 |
| Power Supply Conduit Hole Dia. (in) | 1.375 | 1.375 | 1.375 | 1.375 | 1.375 |
| Low-VoltageConduit Hole Dia. (in) | 0.875 | 0.875 | 0.875 | 0.875 | 0.875 |
| **OPERATING WEIGHT (LBS.)** | | | | | |
| Operating Weight (lbs) | 1296 | 1296 | 1296 | 1296 | 1296 |
| **SHIPPING WEIGHT (LBS.)** | | | | | |
| Ship Weight (lbs) | 1353 | 1353 | 1353 | 1353 | 1353 |

[1] Wire size should be determined in accordance with National Electrical Codes. Extensive wire runs will require larger wire sizes.
[2] May use fuses or HACR-type circuit breakers of the same size as noted.
Note: Always check the S&R plate for electrical data on the unit being installed.

| Model | DHG1204DH00001S | DHG1207DL00001S | DHG1207DM00001S | DHG1207DH00001S |
|---|---|---|---|---|
| **COOLING CAPACITY** | | | | |
| Total, BTU/h | 116,000 | 116,000 | 116,000 | 116,000 |
| IEER / EER | 17/12.5 | 17/12.5 | 17/12.5 | 17/12.5 |
| AHRI Reference # | 216436792 | 216436793 | 216436793 | 216436793 |
| **HEATING CAPACITY** | | | | |
| Heat Range | HIGH | LOW | MEDIUM | HIGH |
| No. of Burners | 7 | 5 | 6 | 7 |
| High Stage Input / Output (KBTU/H) | 240/194.4 | 130/105.3 | 180/145.8 | 240/194.4 |
| Low Stage Input / Output (KBTU/H) | 180/145.8 | 97.5/79 | 135/109.35 | 180/145.8 |
| Thermal Efficiency (T.E.) | 81% | 81% | 81% | 81% |
| Annual Fuel Utilization Efficiency (AFUE) | N/A | N/A | N/A | N/A |
| High Stage Temperature Rise Range (°F) | 30 - 60 | 25 - 55 | 25 - 55 | 30 - 60 |
| Low Stage Temperature Rise Range (°F) | 30 - 60 | 25 - 55 | 25 - 55 | 30 - 60 |
| **EVAPORATOR MOTOR COIL** | | | | |
| Motor Type | DIRECT DRIVE | DIRECT DRIVE | DIRECT DRIVE | DIRECT DRIVE |
| External Static Pressure (ESP) | STANDARD | STANDARD | STANDARD | STANDARD |
| Wheel Dia. X Width | Ø15.12 X 15.00 | Ø15.12 X 15.00 | Ø15.12 X 15.00 | Ø15.12 X 15.00 |
| Indoor Nominal CFM | 3500 | 3500 | 3500 | 3500 |
| RPM | 300-1600 | 300-1600 | 300-1600 | 300-1600 |
| Indoor Horsepower | 2.4 | 2.4 | 2.4 | 2.4 |
| Filter Size (in) | 20 X 25 X 2 (2)<br>25 X 25 X 2(2) | 20 X 25 X 2 (2)<br>25 X 25 X 2(2) | 20 X 25 X 2 (2)<br>25 X 25 X 2(2) | 20 X 25 X 2 (2)<br>25 X 25 X 2(2) |
| Drain Size (NPT) | 3/4 | 3/4 | 3/4 | 3/4 |
| R32 Refrigerant Charge (oz.) | 142/146 | 142/146 | 142/146 | 142/146 |
| Evaporator Coil Face Area ($ft^2$) | 16.6 | 16.6 | 16.6 | 16.6 |
| Rows Deep/ Fins per Inch | 4/16 | 4/16 | 4/16 | 4/16 |
| **CONDENSER FAN/COIL** | | | | |
| Quantity of Condenser Fan Motors | 2 | 2 | 2 | 2 |
| RPM (High/Low stage) | 1050 | 1050 | 1050 | 1050 |
| Outdoor Horsepower | 1/3 | 1/3 | 1/3 | 1/3 |
| Fan Diameter/ # Fan Blades | 22/3 | 22/3 | 22/3 | 22/3 |
| Face Area ($ft^2$) | 39.6 | 39.6 | 39.6 | 39.6 |
| Rows Deep / Fins per Inch | 2/28±1 | 2/28±1 | 2/28±1 | 2/28±1 |
| **COMPRESSOR** | | | | |
| Quantity / Type / Stages | 2/SCROLL/1 | 2/SCROLL/1 | 2/SCROLL/1 | 2/SCROLL/1 |
| Compressor RLA / LRA | 7.7/69.0 | 6.4/47.8 | 6.4/47.8 | 6.4/47.8 |
| **ELECTRICAL DATA** | | | | |
| Voltage-Phase-Frequency | 460-3-60 | 575-3-60 | 575-3-60 | 575-3-60 |
| Indoor Blower FLA | 5.4 | 4 | 4 | 4 |
| Max External Static (In. W.C.) | 0.8 | 0.8 | 0.8 | 0.8 |
| Outdoor Fan FLA | 0.85 | 0.67 | 0.67 | 0.67 |
| Min. Circuit Ampacity[1] | 24.4 | 19.7 | 19.7 | 19.7 |
| Max. Overcurrent Protection (A)[2] | 30 | 25 | 25 | 25 |
| Power Supply Conduit Hole Dia. (in) | 1.375 | 1.375 | 1.375 | 1.375 |
| Low-VoltageConduit Hole Dia. (in) | 0.875 | 0.875 | 0.875 | 0.875 |
| **OPERATING WEIGHT (LBS.)** | | | | |
| Operating Weight (lbs) | 1296 | 1296 | 1296 | 1296 |
| **SHIPPING WEIGHT (LBS.)** | | | | |
| Ship Weight (lbs) | 1353 | 1353 | 1353 | 1353 |

[1] Wire size should be determined in accordance with National Electrical Codes. Extensive wire runs will require larger wire sizes.
[2] May use fuses or HACR-type circuit breakers of the same size as noted.
Note: Always check the S&R plate for electrical data on the unit being installed.

| Model | DHG1503DL00001S | DHG1503DM00001S | DHG1503DH00001S | DHG1504DL00001S | DHG1504DM00001S | DHG1504DH00001S |
|---|---|---|---|---|---|---|
| **COOLING CAPACITY** | | | | | | |
| Total, BTU/h | 138,000 | 138,000 | 138,000 | 138,000 | 138,000 | 138,000 |
| IEER / EER | 16/12 | 16/12 | 16/12 | 16/12 | 16/12 | 16/12 |
| AHRI Reference # | 216436794 | 216436794 | 216436794 | 216436795 | 216436795 | 216436795 |
| **HEATING CAPACITY** | | | | | | |
| Heat Range | LOW | MEDIUM | HIGH | LOW | MEDIUM | HIGH |
| No. of Burners | 5 | 6 | 7 | 5 | 6 | 7 |
| High Stage Input / Output (KBTU/H) | 130/105.3 | 180/145.8 | 240/194.4 | 130/105.3 | 180/145.8 | 240/194.4 |
| Low Stage Input / Output (KBTU/H) | 97.5/79 | 135/109.35 | 180/145.8 | 97.5/79 | 135/109.35 | 180/145.8 |
| Thermal Efficiency (T.E.) | 81% | 81% | 81% | 81% | 81% | 81% |
| Annual Fuel Utilization Efficiency (AFUE) | N/A | N/A | N/A | N/A | N/A | N/A |
| High Stage Temperature Rise Range (°F) | 25 - 55 | 25 - 55 | 35 - 65 | 25 - 55 | 25 - 55 | 35 - 65 |
| Low Stage Temperature Rise Range (°F) | 25 - 55 | 25 - 55 | 35 - 65 | 25 - 55 | 25 - 55 | 35 - 65 |
| **EVAPORATOR MOTOR COIL** | | | | | | |
| Motor Type | DIRECT DRIVE | DIRECT DRIVE | DIRECT DRIVE | DIRECT DRIVE | DIRECT DRIVE | DIRECT DRIVE |
| External Static Pressure (ESP) | STANDARD | STANDARD | STANDARD | STANDARD | STANDARD | STANDARD |
| Wheel Dia. X Width | Ø15.12 X 15.00 | Ø15.12 X 15.00 | Ø15.12 X 15.00 | Ø15.12 X 15.00 | Ø15.12 X 15.00 | Ø15.12 X 15.00 |
| Indoor Nominal CFM | 3800 | 3800 | 3800 | 3800 | 3800 | 3800 |
| RPM | 300-1600 | 300-1600 | 300-1600 | 300-1600 | 300-1600 | 300-1600 |
| Indoor Horsepower | 3.5 | 3.5 | 3.5 | 3.5 | 3.5 | 3.5 |
| Filter Size (in) | 25 X 25 X 2 (4) | 25 X 25 X 2 (4) | 25 X 25 X 2 (4) | 25 X 25 X 2 (4) | 25 X 25 X 2 (4) | 25 X 25 X 2 (4) |
| Drain Size (NPT) | 3/4 | 3/4 | 3/4 | 3/4 | 3/4 | 3/4 |
| R32 Refrigerant Charge (oz.) | 148/147 | 148/147 | 148/147 | 148/147 | 148/147 | 148/147 |
| Evaporator Coil Face Area ($ft^2$) | 19.1 | 19.1 | 19.1 | 19.1 | 19.1 | 19.1 |
| Rows Deep/ Fins per Inch | 4/16 | 4/16 | 4/16 | 4/16 | 4/16 | 4/16 |
| **CONDENSER FAN/COIL** | | | | | | |
| Quantity of Condenser Fan Motors | 2 | 2 | 2 | 2 | 2 | 2 |
| RPM (High/Low stage) | 1150 | 1150 | 1150 | 1150 | 1150 | 1150 |
| Outdoor Horsepower | 1/3 | 1/3 | 1/3 | 1/3 | 1/3 | 1/3 |
| Fan Diameter/ # Fan Blades | 22/3 | 22/3 | 22/3 | 22/3 | 22/3 | 22/3 |
| Face Area ($ft^2$) | 43.8 | 43.8 | 43.8 | 43.8 | 43.8 | 43.8 |
| Rows Deep / Fins per Inch | 2/28±1 | 2/28±1 | 2/28±1 | 2/28±1 | 2/28±1 | 2/28±1 |
| **COMPRESSOR** | | | | | | |
| Quantity / Type / Stages | 2/SCROLL/1 | 2/SCROLL/1 | 2/SCROLL/1 | 2/SCROLL/1 | 2/SCROLL/1 | 2/SCROLL/1 |
| Compressor RLA / LRA | 19.2/156.5 | 19.2/156.5 | 19.2/156.5 | 9/74.8 | 9/74.8 | 9/74.8 |
| **ELECTRICAL DATA** | | | | | | |
| Voltage-Phase-Frequency | 208/230-3-60 | 208/230-3-60 | 208/230-3-60 | 460-3-60 | 460-3-60 | 460-3-60 |
| Indoor Blower FLA | 10.9 | 10.9 | 10.9 | 7.2 | 7.2 | 7.2 |
| Max External Static (In. W.C.) | 0.8 | 0.8 | 0.8 | 0.8 | 0.8 | 0.8 |
| Outdoor Fan FLA | 3.5 | 3.5 | 3.5 | 1.6 | 1.6 | 1.6 |
| Min. Circuit Ampacity[1] | 61.1/61.1 | 61.1/61.1 | 61.1/61.1 | 30.6 | 30.6 | 30.6 |
| Max. Overcurrent Protection (A)[2] | 80/80 | 80/80 | 80/80 | 35 | 35 | 35 |
| Power Supply Conduit Hole Dia. (in) | 1.375 | 1.375 | 1.375 | 1.375 | 1.375 | 1.375 |
| Low-VoltageConduit Hole Dia. (in) | 0.875 | 0.875 | 0.875 | 0.875 | 0.875 | 0.875 |
| **OPERATING WEIGHT (LBS.)** | | | | | | |
| Operating Weight (lbs) | 1310 | 1310 | 1310 | 1310 | 1310 | 1310 |
| **SHIPPING WEIGHT (LBS.)** | | | | | | |
| Ship Weight (lbs) | 1368 | 1368 | 1368 | 1368 | 1368 | 1368 |

[1] Wire size should be determined in accordance with National Electrical Codes. Extensive wire runs will require larger wire sizes.
[2] May use fuses or HACR-type circuit breakers of the same size as noted.
Note: Always check the S&R plate for electrical data on the unit being installed.

| Model | DHG1507DL00001S | DHG1507DM00001S | DHG1507DH00001S | DHG1503WL00001F | DHG1503WM00001F | DHG1503WH00001F |
|---|---|---|---|---|---|---|
| **COOLING CAPACITY** | | | | | | |
| Total, BTU/h | 138,000 | 138,000 | 138,000 | 138,000 | 138,000 | 138,000 |
| IEER / EER | 16/12 | 16/12 | 16/12 | 16/12 | 16/12 | 16/12 |
| AHRI Reference # | 216436796 | 216436796 | 216436796 | 216436794 | 216436794 | 216436794 |
| **HEATING CAPACITY** | | | | | | |
| Heat Range | LOW | MEDIUM | HIGH | LOW | MEDIUM | HIGH |
| No. of Burners | 5 | 6 | 7 | 5 | 6 | 7 |
| High Stage Input / Output (KBTU/H) | 130/105.3 | 180/145.8 | 240/194.4 | 130/105.3 | 180/145.8 | 240/194.4 |
| Low Stage Input / Output (KBTU/H) | 97.5/79 | 135/109.35 | 180/145.8 | 97.5/79 | 135/109.35 | 180/145.8 |
| Thermal Efficiency (T.E.) | 81% | 81% | 81% | 81% | 81% | 81% |
| Annual Fuel Utilization Efficiency (AFUE) | N/A | N/A | N/A | N/A | N/A | N/A |
| High Stage Temperature Rise Range (°F) | 25 - 55 | 25 - 55 | 35 - 65 | 25 - 55 | 25 - 55 | 35 - 65 |
| Low Stage Temperature Rise Range (°F) | 25 - 55 | 25 - 55 | 35 - 65 | 25 - 55 | 25 - 55 | 35 - 65 |
| **EVAPORATOR MOTOR COIL** | | | | | | |
| Motor Type | DIRECT DRIVE | DIRECT DRIVE | DIRECT DRIVE | DIRECT DRIVE | DIRECT DRIVE | DIRECT DRIVE |
| External Static Pressure (ESP) | STANDARD | STANDARD | STANDARD | HIGH | HIGH | HIGH |
| Wheel Dia. X Width | Ø15.12 X 15.00 | Ø15.12 X 15.00 | Ø15.12 X 15.00 | Ø15.12 X 15.00 | Ø15.12 X 15.00 | Ø15.12 X 15.00 |
| Indoor Nominal CFM | 3800 | 3800 | 3800 | 3800 | 3800 | 3800 |
| RPM | 300-1600 | 300-1600 | 300-1600 | 300-1600 | 300-1600 | 300-1600 |
| Indoor Horsepower | 3.5 | 3.5 | 3.5 | 5.0 | 5.0 | 5.0 |
| Filter Size (in) | 25 X 25 X 2 (4) | 25 X 25 X 2 (4) | 25 X 25 X 2 (4) | 25 X 25 X 2 (4) | 25 X 25 X 2 (4) | 25 X 25 X 2 (4) |
| Drain Size (NPT) | 3/4 | 3/4 | 3/4 | 3/4 | 3/4 | 3/4 |
| R32 Refrigerant Charge (oz.) | 148/147 | 148/147 | 148/147 | 148/147 | 148/147 | 148/147 |
| Evaporator Coil Face Area ($ft^2$) | 19.1 | 19.1 | 19.1 | 19.1 | 19.1 | 19.1 |
| Rows Deep/ Fins per Inch | 4/16 | 4/16 | 4/16 | 4/16 | 4/16 | 4/16 |
| **CONDENSER FAN/COIL** | | | | | | |
| Quantity of Condenser Fan Motors | 2 | 2 | 2 | 2 | 2 | 2 |
| RPM (High/Low stage) | 1150 | 1150 | 1150 | 1150 | 1150 | 1150 |
| Outdoor Horsepower | 1/3 | 1/3 | 1/3 | 1/3 | 1/3 | 1/3 |
| Fan Diameter/ # Fan Blades | 22/3 | 22/3 | 22/3 | 22/3 | 22/3 | 22/3 |
| Face Area ($ft^2$) | 43.8 | 43.8 | 43.8 | 43.8 | 43.8 | 43.8 |
| Rows Deep / Fins per Inch | 2/28±1 | 2/28±1 | 2/28±1 | 2/28±1 | 2/28±1 | 2/28±1 |
| **COMPRESSOR** | | | | | | |
| Quantity / Type / Stages | 2/SCROLL/1 | 2/SCROLL/1 | 2/SCROLL/1 | 2/SCROLL/1 | 2/SCROLL/1 | 2/SCROLL/1 |
| Compressor RLA / LRA | 7.1/53.9 | 7.1/53.9 | 7.1/53.9 | 19.2/156.5 | 19.2/156.5 | 19.2/156.5 |
| **ELECTRICAL DATA** | | | | | | |
| Voltage-Phase-Frequency | 575-3-60 | 575-3-60 | 575-3-60 | 208/230-3-60 | 208/230-3-60 | 208/230-3-60 |
| Indoor Blower FLA | 5 | 5 | 5 | 14.5 | 14.5 | 14.5 |
| Max External Static (In. W.C.) | 0.8 | 0.8 | 0.8 | 2 | 2 | 2 |
| Outdoor Fan FLA | 1.54 | 1.54 | 1.54 | 3.5 | 3.5 | 3.5 |
| Min. Circuit Ampacity[1] | 23.9 | 23.9 | 23.9 | 64.7/64.7 | 64.7/64.7 | 64.7/64.7 |
| Max. Overcurrent Protection (A)[2] | 30 | 30 | 30 | 80/80 | 80/80 | 80/80 |
| Power Supply Conduit Hole Dia. (in) | 1.375 | 1.375 | 1.375 | 1.375 | 1.375 | 1.375 |
| Low-VoltageConduit Hole Dia. (in) | 0.875 | 0.875 | 0.875 | 0.875 | 0.875 | 0.875 |
| **OPERATING WEIGHT (LBS.)** | | | | | | |
| Operating Weight (lbs) | 1310 | 1310 | 1310 | 1310 | 1310 | 1310 |
| **SHIPPING WEIGHT (LBS.)** | | | | | | |
| Ship Weight (lbs) | 1368 | 1368 | 1368 | 1368 | 1368 | 1368 |

[1] Wire size should be determined in accordance with National Electrical Codes. Extensive wire runs will require larger wire sizes.
[2] May use fuses or HACR-type circuit breakers of the same size as noted.
Note: Always check the S&R plate for electrical data on the unit being installed.

| Model | DHG1504WL00001F | DHG1504WM00001F | DHG1504WH00001F | DHG1507WL00001F | DHG1507WM00001F | DHG1507WH00001F |
|---|---|---|---|---|---|---|
| **COOLING CAPACITY** | | | | | | |
| Total, BTU/h | 138,000 | 138,000 | 138,000 | 138,000 | 138,000 | 138,000 |
| IEER / EER | 16/12 | 16/12 | 16/12 | 16/12 | 16/12 | 16/12 |
| AHRI Reference # | 216436795 | 216436795 | 216436795 | 216436796 | 216436796 | 216436796 |
| **HEATING CAPACITY** | | | | | | |
| Heat Range | LOW | MEDIUM | HIGH | LOW | MEDIUM | HIGH |
| No. of Burners | 5 | 6 | 7 | 5 | 6 | 7 |
| High Stage Input / Output (KBTU/H) | 130/105.3 | 180/145.8 | 240/194.4 | 130/105.3 | 180/145.8 | 240/194.4 |
| Low Stage Input / Output (KBTU/H) | 97.5/79 | 135/109.35 | 180/145.8 | 97.5/79 | 135/109.35 | 180/145.8 |
| Thermal Efficiency (T.E.) | 81% | 81% | 81% | 81% | 81% | 81% |
| Annual Fuel Utilization Efficiency (AFUE) | N/A | N/A | N/A | N/A | N/A | N/A |
| High Stage Temperature Rise Range (°F) | 25 - 55 | 25 - 55 | 35 - 65 | 25 - 55 | 25 - 55 | 35 - 65 |
| Low Stage Temperature Rise Range (°F) | 25 - 55 | 25 - 55 | 35 - 65 | 25 - 55 | 25 - 55 | 35 - 65 |
| **EVAPORATOR MOTOR COIL** | | | | | | |
| Motor Type | DIRECT DRIVE | DIRECT DRIVE | DIRECT DRIVE | DIRECT DRIVE | DIRECT DRIVE | DIRECT DRIVE |
| External Static Pressure (ESP) | HIGH | HIGH | HIGH | HIGH | HIGH | HIGH |
| Wheel Dia. X Width | Ø15.12 X 15.00 | Ø15.12 X 15.00 | Ø15.12 X 15.00 | Ø15.12 X 15.00 | Ø15.12 X 15.00 | Ø15.12 X 15.00 |
| Indoor Nominal CFM | 3800 | 3800 | 3800 | 3800 | 3800 | 3800 |
| RPM | 300-1600 | 300-1600 | 300-1600 | 300-1600 | 300-1600 | 300-1600 |
| Indoor Horsepower | 5.0 | 5.0 | 5.0 | 5.0 | 5.0 | 5.0 |
| Filter Size (in) | 25 X 25 X 2 (4) | 25 X 25 X 2 (4) | 25 X 25 X 2 (4) | 25 X 25 X 2 (4) | 25 X 25 X 2 (4) | 25 X 25 X 2 (4) |
| Drain Size (NPT) | 3/4 | 3/4 | 3/4 | 3/4 | 3/4 | 3/4 |
| R32 Refrigerant Charge (oz.) | 148/147 | 148/147 | 148/147 | 148/147 | 148/147 | 148/147 |
| Evaporator Coil Face Area ($ft^2$) | 19.1 | 19.1 | 19.1 | 19.1 | 19.1 | 19.1 |
| Rows Deep/ Fins per Inch | 4/16 | 4/16 | 4/16 | 4/16 | 4/16 | 4/16 |
| **CONDENSER FAN/COIL** | | | | | | |
| Quantity of Condenser Fan Motors | 2 | 2 | 2 | 2 | 2 | 2 |
| RPM (High/Low stage) | 1150 | 1150 | 1150 | 1150 | 1150 | 1150 |
| Outdoor Horsepower | 1/3 | 1/3 | 1/3 | 1/3 | 1/3 | 1/3 |
| Fan Diameter/ # Fan Blades | 22/3 | 22/3 | 22/3 | 22/3 | 22/3 | 22/3 |
| Face Area ($ft^2$) | 43.8 | 43.8 | 43.8 | 43.8 | 43.8 | 43.8 |
| Rows Deep / Fins per Inch | 2/28±1 | 2/28±1 | 2/28±1 | 2/28±1 | 2/28±1 | 2/28±1 |
| **COMPRESSOR** | | | | | | |
| Quantity / Type / Stages | 2/SCROLL/1 | 2/SCROLL/1 | 2/SCROLL/1 | 2/SCROLL/1 | 2/SCROLL/1 | 2/SCROLL/1 |
| Compressor RLA / LRA | 9/74.8 | 9/74.8 | 9/74.8 | 7.1/53.9 | 7.1/53.9 | 7.1/53.9 |
| **ELECTRICAL DATA** | | | | | | |
| Voltage-Phase-Frequency | 460-3-60 | 460-3-60 | 460-3-60 | 575-3-60 | 575-3-60 | 575-3-60 |
| Indoor Blower FLA | 10.6 | 10.6 | 10.6 | 7.2 | 7.2 | 7.2 |
| Max External Static (In. W.C.) | 2 | 2 | 2 | 2 | 2 | 2 |
| Outdoor Fan FLA | 1.6 | 1.6 | 1.6 | 1.54 | 1.54 | 1.54 |
| Min. Circuit Ampacity[1] | 34.0 | 34.0 | 34.0 | 26.1 | 26.1 | 26.1 |
| Max. Overcurrent Protection (A)[2] | 40 | 40 | 40 | 30 | 30 | 30 |
| Power Supply Conduit Hole Dia. (in) | 1.375 | 1.375 | 1.375 | 1.375 | 1.375 | 1.375 |
| Low-VoltageConduit Hole Dia. (in) | 0.875 | 0.875 | 0.875 | 0.875 | 0.875 | 0.875 |
| **OPERATING WEIGHT (LBS.)** | | | | | | |
| Operating Weight (lbs) | 1310 | 1310 | 1310 | 1310 | 1310 | 1310 |
| **SHIPPING WEIGHT (LBS.)** | | | | | | |
| Ship Weight (lbs) | 1368 | 1368 | 1368 | 1368 | 1368 | 1368 |

[1] Wire size should be determined in accordance with National Electrical Codes. Extensive wire runs will require larger wire sizes.
[2] May use fuses or HACR-type circuit breakers of the same size as noted.
Note: Always check the S&R plate for electrical data on the unit being installed.

## Coil Dimensions

| | | Indoor | | | Outdoor | | |
|---|---|---|---|---|---|---|---|
| Model | Tons | Fin height in. | Fin length in. | Area (Ft^2) | Fin height in. | Fin length in. | Area (Ft^2) |
| DHG | 7.5 | 34.6 | 53.1 | 12.8 | 47.9 | 53.1 | 35.3 |
| | 8.5 | 45.0 | 53.1 | 16.6 | 47.9 | 53.1 | 35.3 |
| | 10 | 45.0 | 53.1 | 16.6 | 47.9 | 59.6 | 39.6 |
| | 12.5 | 52.0 | 53.1 | 19.1 | 52.9 | 59.6 | 43.8 |

## AHRI Ratings

| MODEL | CAPACITY | EER | IEER |
|---|---|---|---|
| DHG090 | 90,000 | 12.5 | 17.5 |
| DHG102 | 102,000 | 12.5 | 17.5 |
| DHG120 | 116,000 | 12.5 | 17 |
| DHG150 | 138,000 | 12 | 16 |

## Sound Data

| Model | Outdoor sound (dB) at 60 Hz | | | | | | | | |
|---|---|---|---|---|---|---|---|---|---|
| | A-Weighted | 63 | 125 | 250 | 500 | 1000 | 2000 | 4000 | 8000 |
| 090 | 82.9 | 84.1 | 82 | 79.7 | 77.6 | 75.2 | 71.7 | 69 | 69 |
| 102 | 80.2 | 81.1 | 78.7 | 77.1 | 76.1 | 70.8 | 66.5 | 64.1 | 64.1 |
| 120 | 81.8 | 82.8 | 81.9 | 79.1 | 76.9 | 72.9 | 68.3 | 66 | 66 |
| 150 | 85 | 75.8 | 76.4 | 78.5 | 78.2 | 77.7 | 74.7 | 70.4 | 64.7 |

**Notes:**

[1] Outdoor sound data is measured in accordance with AHRI standard 270.

[2] Measurements are expressed in terms of sound power. Do not compare these values to sound pressure values because sound pressure depends on specific environment factors which normally do not match individual applications. Sound power values are independent of the environment and therefore more accurate.

[3] A-weighted sound ratings filter out high and very low frequencies, to better approximate the response of "average" human ear. A-weighted measurements for Daikin units are taken in accordance with AHRI standard 270.

| Model Size | DIM "A" |
|---|---|
| DHG090 | 54 3/5 |
| DHG102 | 54 3/5 |
| DHG120 | 54 3/5 |
| DHG150 | 58 4/5 |

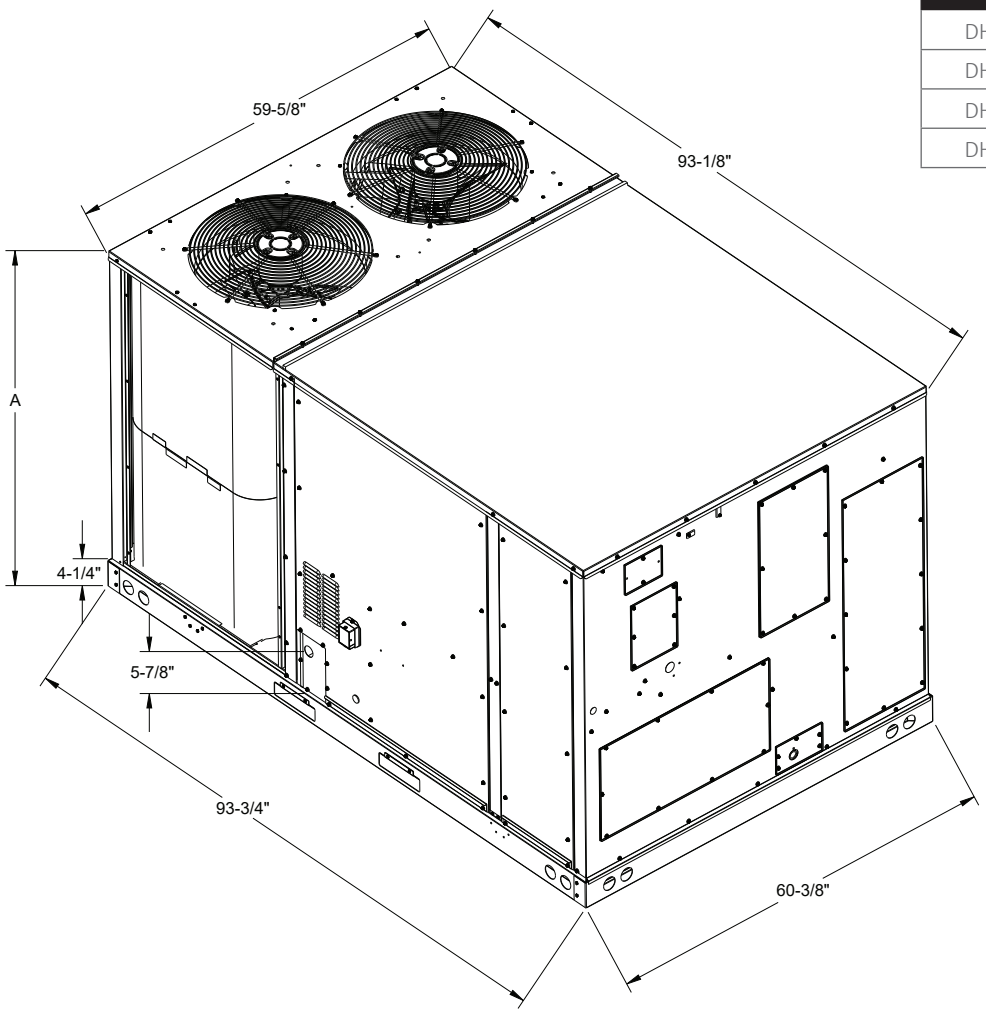


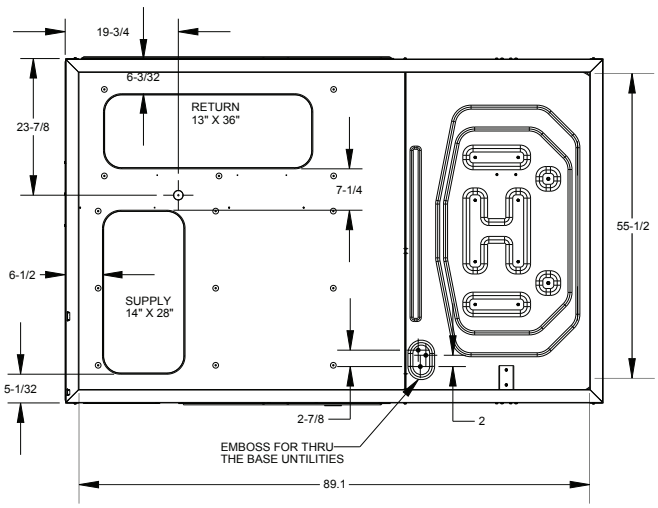


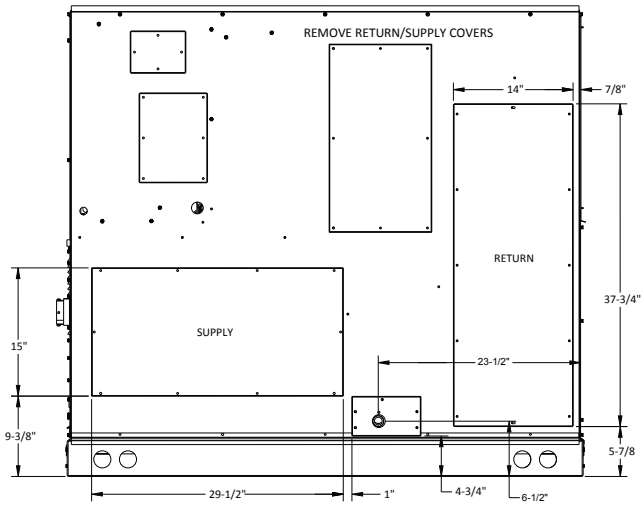

| | | | Outdoor Ambient Temperature | | | | | | | | | | | | | | | | | | | | | | | |
|---|---|---|---|---|---|---|---|---|---|---|---|---|---|---|---|---|---|---|---|---|---|---|---|---|---|---|
| | | | 65 | | | | 75 | | | | 85 | | | | 95 | | | | 105 | | | | 115 | | | |
| | | | Entering Indoor Wet Bulb Temperature | | | | | | | | | | | | | | | | | | | | | | | |
| IDB | Airflow | ID WB | 59 | 63 | 67 | 71 | 59 | 63 | 67 | 71 | 59 | 63 | 67 | 71 | 59 | 63 | 67 | 71 | 59 | 63 | 67 | 71 | 59 | 63 | 67 | 71 |
| 70 | 2625 | MBh | 91.1 | 92.4 | 95.1 | - | 90.3 | 91.6 | 94.3 | - | 87.9 | 89.2 | 91.9 | - | 83.8 | 85.1 | 87.8 | - | 78.7 | 80.0 | 82.8 | - | 74.1 | 75.4 | 78.2 | - |
| | | S/T | 0.63 | 0.56 | 0.44 | - | 0.63 | 0.56 | 0.44 | - | 0.66 | 0.59 | 0.46 | - | 0.68 | 0.61 | 0.47 | - | 0.71 | 0.64 | 0.50 | - | 0.80 | 0.72 | 0.57 | - |
| | | ΔT | 19.75 | 17.92 | 14.51 | - | 19.70 | 17.87 | 14.46 | - | 19.95 | 18.13 | 14.72 | - | 19.68 | 17.85 | 14.44 | - | 19.43 | 17.61 | 14.20 | - | 20.58 | 18.75 | 15.34 | - |
| | | kW | 5.29 | 5.29 | 5.28 | - | 5.88 | 5.87 | 5.86 | - | 6.53 | 6.53 | 6.52 | - | 7.24 | 7.23 | 7.22 | - | 8.03 | 8.02 | 8.01 | - | 8.96 | 8.95 | 8.94 | - |
| | | Amps | 20.02 | 20.00 | 19.95 | - | 22.70 | 22.68 | 22.63 | - | 25.69 | 25.67 | 25.63 | - | 28.93 | 28.91 | 28.86 | - | 32.55 | 32.53 | 32.48 | - | 36.79 | 36.77 | 36.73 | - |
| | | Hi PR | 248 | 249 | 251 | - | 287 | 288 | 290 | - | 328 | 329 | 331 | - | 372 | 373 | 375 | - | 419 | 420 | 422 | - | 470 | 471 | 473 | - |
| | | Lo PR | 128 | 130 | 133 | - | 136 | 138 | 141 | - | 143 | 144 | 148 | - | 149 | 148 | 154 | - | 154 | 156 | 158 | - | 161 | 163 | 166 | - |
| | 3000 | MBh | 92.3 | 93.6 | 96.3 | - | 91.5 | 92.8 | 95.5 | - | 89.1 | 90.4 | 93.1 | - | 85.0 | 86.3 | 89.0 | - | 79.9 | 81.2 | 84.0 | - | 75.4 | 76.6 | 79.4 | - |
| | | S/T | 0.67 | 0.59 | 0.46 | - | 0.67 | 0.60 | 0.46 | - | 0.70 | 0.62 | 0.48 | - | 0.72 | 0.64 | 0.49 | - | 0.76 | 0.67 | 0.51 | - | 0.85 | 0.76 | 0.59 | - |
| | | ΔT | 18.64 | 16.82 | 13.41 | - | 18.59 | 16.77 | 13.36 | - | 18.85 | 17.02 | 13.61 | - | 18.57 | 16.75 | 13.34 | - | 18.33 | 16.50 | 13.09 | - | 19.47 | 17.65 | 14.24 | - |
| | | kW | 5.32 | 5.32 | 5.31 | - | 5.91 | 5.90 | 5.89 | - | 6.56 | 6.56 | 6.55 | - | 7.27 | 7.26 | 7.25 | - | 8.06 | 8.05 | 8.04 | - | 8.99 | 8.98 | 8.97 | - |
| | | Amps | 20.16 | 20.14 | 20.09 | - | 22.84 | 22.82 | 22.77 | - | 25.83 | 25.81 | 25.76 | - | 29.07 | 29.05 | 29.00 | - | 32.69 | 32.67 | 32.62 | - | 36.93 | 36.91 | 36.86 | - |
| | | Hi PR | 250 | 251 | 253 | - | 289 | 290 | 292 | - | 330 | 331 | 333 | - | 374 | 375 | 377 | - | 422 | 423 | 424 | - | 472 | 473 | 475 | - |
| | | Lo PR | 130 | 132 | 135 | - | 138 | 140 | 143 | - | 145 | 146 | 150 | - | 151 | 151 | 155 | - | 156 | 158 | 161 | - | 163 | 165 | 168 | - |
| | 3375 | MBh | 93.7 | 95.0 | 97.8 | - | 92.9 | 94.2 | 96.9 | - | 90.5 | 91.8 | 94.6 | - | 86.4 | 87.7 | 90.4 | - | 81.4 | 82.7 | 85.4 | - | 76.8 | 78.1 | 80.8 | - |
| | | S/T | 0.70 | 0.62 | 0.47 | - | 0.71 | 0.62 | 0.48 | - | 0.73 | 0.65 | 0.50 | - | 0.76 | 0.67 | 0.51 | - | 0.79 | 0.70 | 0.53 | - | 0.90 | 0.79 | 0.61 | - |
| | | ΔT | 17.71 | 15.89 | 12.48 | - | 17.66 | 15.84 | 12.43 | - | 17.92 | 16.09 | 12.68 | - | 17.65 | 15.82 | 12.41 | - | 17.40 | 15.58 | 12.17 | - | 18.54 | 16.72 | 13.31 | - |
| | | kW | 5.35 | 5.34 | 5.33 | - | 5.93 | 5.93 | 5.92 | - | 6.59 | 6.58 | 6.57 | - | 7.29 | 7.29 | 7.28 | - | 8.08 | 8.08 | 8.07 | - | 9.01 | 9.01 | 9.00 | - |
| | | Amps | 20.28 | 20.25 | 20.21 | - | 22.96 | 22.93 | 22.89 | - | 25.95 | 25.93 | 25.88 | - | 29.19 | 29.17 | 29.12 | - | 32.80 | 32.78 | 32.74 | - | 37.05 | 37.03 | 36.98 | - |
| | | Hi PR | 252 | 253 | 255 | - | 291 | 292 | 294 | - | 332 | 333 | 335 | - | 376 | 377 | 379 | - | 424 | 425 | 426 | - | 474 | 475 | 477 | - |
| | | Lo PR | 132 | 134 | 137 | - | 140 | 142 | 145 | - | 147 | 148 | 152 | - | 149 | 154 | 158 | - | 158 | 160 | 163 | - | 165 | 167 | 170 | - |
| 75 | 2625 | MBh | 91.6 | 92.9 | 95.6 | 99.8 | 90.8 | 92.1 | 94.8 | 99.0 | 88.4 | 89.7 | 92.4 | 96.6 | 84.3 | 85.6 | 88.3 | 92.5 | 79.3 | 80.6 | 83.3 | 87.5 | 74.7 | 76.0 | 78.7 | 82.9 |
| | | S/T | 0.75 | 0.68 | 0.56 | 0.4 | 0.75 | 0.69 | 0.56 | 0.4 | 0.78 | 0.71 | 0.59 | 0.5 | 0.81 | 0.74 | 0.60 | 0.5 | 0.85 | 0.78 | 0.63 | 0.5 | 0.95 | 0.87 | 0.71 | 0.6 |
| | | ΔT | 23.76 | 21.93 | 18.53 | 15.0 | 23.71 | 21.88 | 18.48 | 14.9 | 23.97 | 22.14 | 18.73 | 15.2 | 23.69 | 21.87 | 18.46 | 14.9 | 23.45 | 21.62 | 18.21 | 14.7 | 24.59 | 22.77 | 19.36 | 15.8 |
| | | kW | 5.29 | 5.28 | 5.27 | 5.3 | 5.87 | 5.87 | 5.86 | 5.9 | 6.53 | 6.52 | 6.51 | 6.6 | 7.23 | 7.23 | 7.22 | 7.3 | 8.02 | 8.02 | 8.01 | 8.1 | 8.95 | 8.95 | 8.94 | 9.0 |
| | | Amps | 20.00 | 19.98 | 19.94 | 20.1 | 22.68 | 22.66 | 22.62 | 22.8 | 25.68 | 25.65 | 25.61 | 25.8 | 28.91 | 28.89 | 28.85 | 29.1 | 32.53 | 32.51 | 32.46 | 32.7 | 36.78 | 36.75 | 36.71 | 36.9 |
| | | Hi PR | 248 | 249 | 251 | 255.1 | 287 | 288 | 290 | 294.2 | 328 | 329 | 331 | 335.1 | 372 | 373 | 375 | 379.2 | 420 | 421 | 422 | 426.8 | 470 | 471 | 473 | 477.5 |
| | | Lo PR | 128 | 130 | 133 | 138.6 | 136 | 138 | 141 | 146.4 | 139 | 145 | 148 | 153.2 | 140 | 150 | 154 | 159.0 | 154 | 156 | 159 | 164.7 | 161 | 163 | 166 | 167.9 |
| | 3000 | MBh | 92.8 | 94.1 | 96.8 | 101.0 | 92.0 | 93.3 | 96.0 | 100.2 | 89.6 | 90.9 | 93.6 | 97.8 | 85.5 | 86.8 | 89.5 | 93.7 | 80.5 | 81.8 | 84.5 | 88.7 | 75.9 | 77.2 | 79.9 | 84.1 |
| | | S/T | 0.81 | 0.73 | 0.59 | 0.5 | 0.81 | 0.74 | 0.60 | 0.5 | 0.84 | 0.76 | 0.62 | 0.5 | 0.87 | 0.79 | 0.64 | 0.5 | 0.92 | 0.83 | 0.67 | 0.5 | 1.00 | 0.93 | 0.75 | 0.6 |
| | | ΔT | 22.66 | 20.83 | 17.42 | 13.9 | 22.61 | 20.78 | 17.37 | 13.8 | 22.86 | 21.04 | 17.63 | 14.1 | 22.59 | 20.76 | 17.35 | 13.8 | 22.35 | 20.52 | 17.11 | 13.6 | 22.99 | 21.66 | 18.25 | 14.7 |
| | | kW | 5.32 | 5.31 | 5.30 | 5.3 | 5.90 | 5.90 | 5.89 | 5.9 | 6.56 | 6.55 | 6.54 | 6.6 | 7.26 | 7.26 | 7.25 | 7.3 | 8.05 | 8.05 | 8.04 | 8.1 | 8.98 | 8.98 | 8.97 | 9.0 |
| | | Amps | 20.14 | 20.12 | 20.07 | 20.3 | 22.82 | 22.80 | 22.76 | 23.0 | 25.81 | 25.79 | 25.75 | 26.0 | 29.05 | 29.03 | 28.99 | 29.2 | 32.67 | 32.65 | 32.60 | 32.8 | 36.91 | 36.89 | 36.85 | 37.1 |
| | | Hi PR | 250 | 251 | 253 | 257.2 | 289 | 290 | 292 | 296.3 | 330 | 331 | 333 | 337.2 | 374 | 375 | 377 | 381.3 | 422 | 423 | 425 | 428.9 | 472 | 474 | 475 | 479.6 |
| | | Lo PR | 130 | 132 | 135 | 140.5 | 138 | 140 | 143 | 148.3 | 140 | 146 | 150 | 155.1 | 139 | 152 | 155 | 160.9 | 156 | 155 | 161 | 166.6 | 148 | 165 | 168 | 171.1 |
| | 3375 | MBh | 94.3 | 95.6 | 98.3 | 102.5 | 93.4 | 94.7 | 97.5 | 101.7 | 91.1 | 92.3 | 95.1 | 99.3 | 86.9 | 88.2 | 91.0 | 95.1 | 81.9 | 83.2 | 85.9 | 90.1 | 77.3 | 78.6 | 81.4 | 85.5 |
| | | S/T | 0.86 | 0.77 | 0.62 | 0.5 | 0.86 | 0.78 | 0.63 | 0.5 | 0.89 | 0.81 | 0.65 | 0.5 | 0.92 | 0.83 | 0.67 | 0.5 | 0.97 | 0.87 | 0.70 | 0.5 | 1.00 | 0.98 | 0.79 | 0.6 |
| | | ΔT | 21.73 | 19.90 | 16.49 | 13.0 | 21.68 | 19.85 | 16.44 | 12.9 | 21.94 | 20.11 | 16.70 | 13.2 | 21.66 | 19.83 | 16.42 | 12.9 | 21.42 | 19.59 | 16.18 | 12.6 | 20.83 | 20.73 | 17.32 | 13.8 |
| | | kW | 5.34 | 5.34 | 5.33 | 5.4 | 5.93 | 5.92 | 5.91 | 6.0 | 6.58 | 6.58 | 6.57 | 6.6 | 7.29 | 7.29 | 7.28 | 7.3 | 8.08 | 8.08 | 8.07 | 8.1 | 9.01 | 9.00 | 8.99 | 9.0 |
| | | Amps | 20.26 | 20.24 | 20.19 | 20.4 | 22.94 | 22.92 | 22.87 | 23.1 | 25.93 | 25.91 | 25.86 | 26.1 | 29.17 | 29.15 | 29.10 | 29.3 | 32.79 | 32.77 | 32.72 | 32.9 | 37.03 | 37.01 | 36.96 | 37.2 |
| | | Hi PR | 252 | 253 | 255 | 259.2 | 291 | 292 | 294 | 298.3 | 332 | 333 | 335 | 339.3 | 376 | 377 | 379 | 383.4 | 424 | 425 | 427 | 430.9 | 475 | 476 | 477 | 481.6 |
| | | Lo PR | 132 | 134 | 137 | 142.6 | 139 | 142 | 145 | 150.4 | 139 | 148 | 152 | 157.2 | 140 | 154 | 158 | 163.0 | 158 | 157 | 163 | 168.7 | 165 | 167 | 170 | 174.5 |

IDB: Entering Indoor Dry Bulb Temperature

Shaded area reflects ACCA (TVA) conditions

kW = Total system power

High and low pressures are measured at the liquid and suction access fittings.

Amps: Unit amps (comp.+ evaporator + condenser fan motors)

Design Subcooling, 16 - 19 °F @ the liquid access fitting connection ARI 95 test conditions. Design Superheat 8 - 12°F @ the compressor suction access fitting connection.

| | | | Outdoor Ambient Temperature | | | | | | | | | | | | | | | | | | | | | | | |
|---|---|---|---|---|---|---|---|---|---|---|---|---|---|---|---|---|---|---|---|---|---|---|---|---|---|---|
| | | | 65 | | | | 75 | | | | 85 | | | | 95 | | | | 105 | | | | 115 | | | |
| | | | Entering Indoor Wet Bulb Temperature | | | | | | | | | | | | | | | | | | | | | | | |
| IDB | Airflow | ID WB | 59 | 63 | 67 | 71 | 59 | 63 | 67 | 71 | 59 | 63 | 67 | 71 | 59 | 63 | 67 | 71 | 59 | 63 | 67 | 71 | 59 | 63 | 67 | 71 |
| 80 | 2625 | MBh | 92.1 | 93.4 | 96.1 | 100.3 | 91.3 | 92.6 | 95.3 | 99.5 | 88.9 | 90.2 | 92.9 | 97.1 | 84.8 | 86.1 | 88.8 | 93.0 | 79.7 | 81.0 | 83.8 | 87.9 | 75.2 | 76.4 | 79.2 | 83.4 |
| | | S/T | 0.87 | 0.80 | 0.68 | 0.5 | 0.88 | 0.81 | 0.68 | 0.6 | 0.91 | 0.84 | 0.71 | 0.6 | 0.94 | 0.87 | 0.73 | 0.6 | 1.00 | 0.91 | 0.77 | 0.6 | 1.00 | 1.00 | 0.85 | 0.7 |
| | | ΔT | 27.80 | 25.98 | 22.57 | 19.0 | 27.75 | 25.93 | 22.52 | 19.0 | 28.01 | 26.18 | 22.77 | 19.2 | 27.73 | 25.91 | 22.50 | 19.0 | 27.49 | 25.66 | 22.25 | 18.7 | 26.03 | 26.47 | 23.40 | 19.9 |
| | | kW | 5.29 | 5.29 | 5.28 | 5.3 | 5.88 | 5.87 | 5.86 | 5.9 | 6.53 | 6.52 | 6.51 | 6.6 | 7.24 | 7.23 | 7.22 | 7.3 | 8.03 | 8.02 | 8.01 | 8.1 | 8.95 | 8.95 | 8.94 | 9.0 |
| | | Amps | 20.02 | 20.00 | 19.95 | 20.2 | 22.70 | 22.68 | 22.63 | 22.8 | 25.69 | 25.67 | 25.62 | 25.8 | 28.93 | 28.91 | 28.86 | 29.1 | 32.54 | 32.52 | 32.48 | 32.7 | 36.79 | 36.77 | 36.72 | 36.9 |
| | | Hi PR | 248 | 249 | 251 | 255.5 | 287 | 289 | 290 | 294.6 | 328 | 330 | 331 | 335.6 | 373 | 374 | 375 | 379.7 | 420 | 421 | 423 | 427.2 | 471 | 472 | 474 | 477.9 |
| | | Lo PR | 128 | 130 | 134 | 139.2 | 128 | 138 | 142 | 147.0 | 128 | 145 | 148 | 153.8 | 149 | 151 | 154 | 159.6 | 155 | 153 | 160 | 165.3 | 162 | 153 | 167 | 171.1 |
| | 3000 | MBh | 93.3 | 94.6 | 97.3 | 101.5 | 92.5 | 93.8 | 96.5 | 100.7 | 90.1 | 91.4 | 94.1 | 98.3 | 86.0 | 87.3 | 90.0 | 94.2 | 80.9 | 82.2 | 85.0 | 89.2 | 76.4 | 77.6 | 80.4 | 84.6 |
| | | S/T | 0.94 | 0.87 | 0.73 | 0.6 | 0.95 | 0.87 | 0.73 | 0.6 | 0.99 | 0.91 | 0.76 | 0.6 | 1.00 | 0.94 | 0.78 | 0.6 | 1.00 | 0.99 | 0.82 | 0.7 | 1.00 | 1.00 | 0.92 | 0.7 |
| | | ΔT | 26.70 | 24.87 | 21.46 | 17.9 | 26.65 | 24.82 | 21.41 | 17.9 | 26.91 | 25.08 | 21.67 | 18.1 | 26.05 | 24.81 | 21.40 | 17.9 | 24.53 | 24.56 | 21.15 | 17.6 | 23.14 | 23.53 | 22.30 | 18.8 |
| | | kW | 5.32 | 5.32 | 5.31 | 5.4 | 5.91 | 5.90 | 5.89 | 5.9 | 6.56 | 6.56 | 6.55 | 6.6 | 7.27 | 7.26 | 7.25 | 7.3 | 8.06 | 8.05 | 8.04 | 8.1 | 8.99 | 8.98 | 8.97 | 9.0 |
| | | Amps | 20.16 | 20.13 | 20.09 | 20.3 | 22.84 | 22.82 | 22.77 | 23.0 | 25.83 | 25.81 | 25.76 | 26.0 | 29.07 | 29.05 | 29.00 | 29.2 | 32.68 | 32.66 | 32.62 | 32.8 | 36.93 | 36.91 | 36.86 | 37.1 |
| | | Hi PR | 250 | 252 | 253 | 257.6 | 290 | 291 | 292 | 296.7 | 331 | 332 | 333 | 337.7 | 375 | 376 | 377 | 381.8 | 422 | 423 | 425 | 429.3 | 473 | 474 | 476 | 480.1 |
| | | Lo PR | 128 | 132 | 136 | 141.1 | 128 | 140 | 143 | 148.9 | 145 | 147 | 150 | 155.7 | 152 | 151 | 156 | 161.5 | 157 | 152 | 162 | 167.2 | 164 | 160 | 169 | 174.3 |
| | 3375 | MBh | 94.7 | 96.0 | 98.8 | 102.9 | 93.9 | 95.2 | 97.9 | 102.1 | 91.5 | 92.8 | 95.6 | 99.7 | 87.4 | 88.7 | 91.4 | 95.6 | 82.4 | 83.7 | 86.4 | 90.6 | 77.8 | 79.1 | 81.8 | 86.0 |
| | | S/T | 1.00 | 0.93 | 0.77 | 0.6 | 1.00 | 0.93 | 0.78 | 0.6 | 1.00 | 0.97 | 0.81 | 0.6 | 1.00 | 1.00 | 0.83 | 0.7 | 1.00 | 1.00 | 0.87 | 0.7 | 1.00 | 1.00 | 0.97 | 0.8 |
| | | ΔT | 25.52 | 23.95 | 20.54 | 17.0 | 25.30 | 23.90 | 20.49 | 17.0 | 24.65 | 24.15 | 20.74 | 17.2 | 23.55 | 23.88 | 20.47 | 16.9 | 22.19 | 22.54 | 20.22 | 16.7 | 20.96 | 21.30 | 21.37 | 17.8 |
| | | kW | 5.35 | 5.34 | 5.33 | 5.4 | 5.93 | 5.93 | 5.92 | 6.0 | 6.59 | 6.58 | 6.57 | 6.6 | 7.29 | 7.29 | 7.28 | 7.3 | 8.08 | 8.08 | 8.07 | 8.1 | 9.01 | 9.01 | 9.00 | 9.0 |
| | | Amps | 20.27 | 20.25 | 20.21 | 20.4 | 22.95 | 22.93 | 22.89 | 23.1 | 25.94 | 25.92 | 25.88 | 26.1 | 29.18 | 29.16 | 29.12 | 29.3 | 32.80 | 32.78 | 32.73 | 32.9 | 37.04 | 37.02 | 36.98 | 37.2 |
| | | Hi PR | 253 | 254 | 255 | 259.7 | 292 | 293 | 294 | 298.8 | 333 | 334 | 335 | 339.7 | 377 | 378 | 379 | 383.8 | 424 | 425 | 427 | 431.4 | 475 | 476 | 478 | 482.1 |
| | | Lo PR | 133 | 134 | 138 | 143.2 | 141 | 142 | 145 | 151.0 | 147 | 149 | 152 | 157.8 | 153 | 152 | 158 | 163.6 | 159 | 161 | 164 | 169.2 | 166 | 167 | 167 | 176.3 |
| 85 | 2625 | MBh | 93.6 | 94.9 | 97.7 | 101.8 | 92.8 | 94.1 | 96.8 | 101.0 | 90.4 | 91.7 | 94.5 | 98.6 | 86.3 | 87.6 | 90.3 | 94.5 | 81.3 | 82.6 | 85.3 | 89.5 | 76.7 | 78.0 | 80.7 | 84.9 |
| | | S/T | 0.97 | 0.90 | 0.77 | 0.6 | 0.97 | 0.91 | 0.78 | 0.6 | 1.00 | 0.94 | 0.81 | 0.7 | 1.00 | 0.97 | 0.83 | 0.7 | 1.00 | 1.00 | 0.87 | 0.7 | 1.00 | 1.00 | 0.97 | 0.8 |
| | | ΔT | 31.39 | 29.56 | 26.15 | 22.6 | 31.34 | 29.51 | 26.10 | 22.6 | 31.32 | 29.77 | 26.36 | 22.8 | 29.89 | 29.49 | 26.08 | 22.6 | 28.15 | 28.60 | 25.84 | 22.3 | 26.56 | 27.01 | 26.98 | 23.5 |
| | | kW | 5.30 | 5.30 | 5.29 | 5.3 | 5.89 | 5.88 | 5.87 | 5.9 | 6.54 | 6.54 | 6.53 | 6.6 | 7.25 | 7.24 | 7.23 | 7.3 | 8.04 | 8.03 | 8.02 | 8.1 | 8.97 | 8.96 | 8.95 | 9.0 |
| | | Amps | 20.07 | 20.05 | 20.00 | 20.2 | 22.75 | 22.73 | 22.68 | 22.9 | 25.74 | 25.72 | 25.67 | 25.9 | 28.98 | 28.96 | 28.91 | 29.1 | 32.60 | 32.58 | 32.53 | 32.7 | 36.84 | 36.82 | 36.77 | 37.0 |
| | | Hi PR | 250 | 251 | 252 | 256.7 | 289 | 290 | 291 | 295.8 | 330 | 331 | 332 | 336.7 | 374 | 375 | 377 | 380.8 | 421 | 422 | 424 | 428.4 | 472 | 473 | 475 | 479.1 |
| | | Lo PR | 131 | 132 | 136 | 141.1 | 139 | 140 | 143 | 148.9 | 147 | 142 | 150 | 155.7 | 151 | 141 | 156 | 161.5 | 157 | 158 | 162 | 167.2 | 164 | 166 | 169 | 174.3 |
| | 3000 | MBh | 94.8 | 96.1 | 98.9 | 103.0 | 94.0 | 95.3 | 98.0 | 102.2 | 91.6 | 92.9 | 95.7 | 99.8 | 87.5 | 88.8 | 91.5 | 95.7 | 82.5 | 83.8 | 86.5 | 90.7 | 77.9 | 79.2 | 81.9 | 86.1 |
| | | S/T | 1.00 | 0.98 | 0.84 | 0.7 | 1.00 | 0.98 | 0.84 | 0.7 | 1.00 | 1.00 | 0.87 | 0.7 | 1.00 | 1.00 | 0.90 | 0.7 | 1.00 | 1.00 | 0.94 | 0.8 | 1.00 | 1.00 | 1.00 | 0.9 |
| | | ΔT | 28.74 | 28.46 | 25.05 | 21.5 | 28.49 | 28.41 | 25.00 | 21.5 | 27.77 | 28.16 | 25.26 | 21.7 | 26.52 | 26.91 | 24.98 | 21.4 | 25.00 | 25.39 | 24.74 | 21.2 | 23.61 | 24.00 | 24.83 | 22.3 |
| | | kW | 5.33 | 5.33 | 5.32 | 5.4 | 5.92 | 5.91 | 5.90 | 5.9 | 6.57 | 6.57 | 6.56 | 6.6 | 7.28 | 7.27 | 7.26 | 7.3 | 8.07 | 8.06 | 8.05 | 8.1 | 9.00 | 8.99 | 8.98 | 9.0 |
| | | Amps | 20.21 | 20.19 | 20.14 | 20.3 | 22.89 | 22.87 | 22.82 | 23.0 | 25.88 | 25.86 | 25.81 | 26.0 | 29.12 | 29.10 | 29.05 | 29.3 | 32.74 | 32.71 | 32.67 | 32.9 | 36.98 | 36.96 | 36.91 | 37.1 |
| | | Hi PR | 252 | 253 | 254 | 258.8 | 291 | 292 | 294 | 297.9 | 332 | 333 | 335 | 338.8 | 376 | 377 | 379 | 382.9 | 423 | 424 | 426 | 430.5 | 474 | 475 | 477 | 481.2 |
| | | Lo PR | 134 | 134 | 138 | 143.0 | 140 | 142 | 145 | 150.8 | 147 | 149 | 152 | 157.6 | 153 | 155 | 158 | 163.4 | 159 | 160 | 164 | 169.1 | 166 | 167 | 171 | 176.2 |
| | 3375 | MBh | 96.3 | 97.6 | 100.3 | 104.5 | 95.5 | 96.8 | 99.5 | 103.7 | 93.1 | 94.4 | 97.1 | 101.3 | 89.0 | 90.3 | 93.0 | 97.2 | 83.9 | 85.2 | 88.0 | 92.1 | 79.3 | 80.6 | 83.4 | 87.5 |
| | | S/T | 1.00 | 1.00 | 0.89 | 0.7 | 1.00 | 1.00 | 0.90 | 0.7 | 1.00 | 1.00 | 0.93 | 0.8 | 1.00 | 1.00 | 0.96 | 0.8 | 1.00 | 1.00 | 1.00 | 0.8 | 1.00 | 1.00 | 1.00 | 0.9 |
| | | ΔT | 25.93 | 26.28 | 24.12 | 20.6 | 25.71 | 26.06 | 24.07 | 20.5 | 25.07 | 25.42 | 24.33 | 20.8 | 23.96 | 24.31 | 24.05 | 20.5 | 22.61 | 22.96 | 23.69 | 20.3 | 21.37 | 21.72 | 22.46 | 21.4 |
| | | kW | 5.36 | 5.35 | 5.34 | 5.4 | 5.94 | 5.94 | 5.93 | 6.0 | 6.60 | 6.59 | 6.58 | 6.6 | 7.30 | 7.30 | 7.29 | 7.3 | 8.09 | 8.09 | 8.08 | 8.1 | 9.02 | 9.02 | 9.01 | 9.1 |
| | | Amps | 20.32 | 20.30 | 20.26 | 20.5 | 23.00 | 22.98 | 22.94 | 23.1 | 26.00 | 25.98 | 25.93 | 26.1 | 29.23 | 29.21 | 29.17 | 29.4 | 32.85 | 32.83 | 32.78 | 33.0 | 37.10 | 37.08 | 37.03 | 37.2 |
| | | Hi PR | 254 | 255 | 257 | 260.8 | 293 | 294 | 296 | 299.9 | 334 | 335 | 337 | 340.9 | 378 | 379 | 381 | 385.0 | 425 | 426 | 428 | 432.5 | 476 | 477 | 479 | 483.3 |
| | | Lo PR | 135 | 136 | 140 | 145.1 | 143 | 144 | 147 | 152.9 | 149 | 151 | 154 | 159.7 | 155 | 157 | 160 | 165.5 | 161 | 162 | 167 | 171.2 | 168 | 170 | 174 | 178.3 |

IDB: Entering Indoor Dry Bulb Temperature

Shaded area reflects ACCA (TVA) conditions

kW = Total system power

High and low pressures are measured at the liquid and suction access fittings.

Amps: Unit amps (comp.+ evaporator + condenser fan motors)

Design Subcooling, 16 - 19 °F @ the liquid access fitting connection ARI 95 test conditions. Design Superheat 8 - 12°F @ the compressor suction access fitting connection.

| | | | Outdoor Ambient Temperature | | | | | | | | | | | | | | | | | | | | | | | |
|---|---|---|---|---|---|---|---|---|---|---|---|---|---|---|---|---|---|---|---|---|---|---|---|---|---|---|
| | | | 65 | | | | 75 | | | | 85 | | | | 95 | | | | 105 | | | | 115 | | | |
| | | | Entering Indoor Wet Bulb Temperature | | | | | | | | | | | | | | | | | | | | | | | |
| IDB | Airflow | ID WB | 59 | 63 | 67 | 71 | 59 | 63 | 67 | 71 | 59 | 63 | 67 | 71 | 59 | 63 | 67 | 71 | 59 | 63 | 67 | 71 | 59 | 63 | 67 | 71 |
| 70 | 2800 | MBh | 103.9 | 105.3 | 108.4 | - | 102.9 | 104.4 | 107.5 | - | 100.2 | 101.7 | 104.8 | - | 95.6 | 97.0 | 100.1 | - | 89.9 | 91.3 | 94.4 | - | 84.7 | 86.1 | 89.2 | - |
| | | S/T | 0.58 | 0.52 | 0.40 | - | 0.58 | 0.52 | 0.41 | - | 0.61 | 0.54 | 0.42 | - | 0.63 | 0.56 | 0.44 | - | 0.66 | 0.59 | 0.45 | - | 0.74 | 0.66 | 0.52 | - |
| | | ΔT | 19.55 | 17.70 | 14.24 | - | 19.50 | 17.65 | 14.19 | - | 19.76 | 17.91 | 14.45 | - | 19.48 | 17.63 | 14.17 | - | 19.23 | 17.38 | 13.92 | - | 20.39 | 18.54 | 15.08 | - |
| | | kW | 5.91 | 5.91 | 5.89 | - | 6.61 | 6.60 | 6.59 | - | 7.38 | 7.38 | 7.36 | - | 8.22 | 8.21 | 8.20 | - | 9.16 | 9.15 | 9.14 | - | 10.26 | 10.25 | 10.24 | - |
| | | Amps | 22.98 | 22.95 | 22.90 | - | 26.15 | 26.13 | 26.07 | - | 29.70 | 29.68 | 29.62 | - | 33.54 | 33.52 | 33.46 | - | 37.83 | 37.81 | 37.75 | - | 42.87 | 42.84 | 42.79 | - |
| | | Hi PR | 254 | 255 | 256 | - | 293 | 295 | 296 | - | 335 | 336 | 338 | - | 380 | 381 | 383 | - | 429 | 430 | 432 | - | 480 | 482 | 483 | - |
| | | Lo PR | 125 | 126 | 130 | - | 132 | 134 | 137 | - | 139 | 141 | 144 | - | 145 | 146 | 149 | - | 150 | 152 | 155 | - | 157 | 159 | 162 | - |
| | 3025 | MBh | 104.7 | 106.1 | 109.2 | - | 103.7 | 105.2 | 108.3 | - | 101.0 | 102.5 | 105.6 | - | 96.4 | 97.8 | 100.9 | - | 90.7 | 92.1 | 95.2 | - | 85.5 | 86.9 | 90.0 | - |
| | | S/T | 0.60 | 0.53 | 0.41 | - | 0.60 | 0.54 | 0.42 | - | 0.63 | 0.56 | 0.44 | - | 0.65 | 0.58 | 0.45 | - | 0.68 | 0.60 | 0.46 | - | 0.77 | 0.69 | 0.53 | - |
| | | ΔT | 18.91 | 17.06 | 13.60 | - | 18.86 | 17.01 | 13.55 | - | 19.12 | 17.27 | 13.81 | - | 18.84 | 16.99 | 13.53 | - | 18.59 | 16.74 | 13.28 | - | 19.75 | 17.90 | 14.44 | - |
| | | kW | 5.93 | 5.93 | 5.91 | - | 6.63 | 6.62 | 6.61 | - | 7.40 | 7.40 | 7.38 | - | 8.24 | 8.24 | 8.22 | - | 9.18 | 9.17 | 9.16 | - | 10.28 | 10.27 | 10.26 | - |
| | | Amps | 23.07 | 23.04 | 22.99 | - | 26.25 | 26.22 | 26.17 | - | 29.80 | 29.77 | 29.72 | - | 33.64 | 33.61 | 33.56 | - | 37.93 | 37.90 | 37.85 | - | 42.96 | 42.93 | 42.88 | - |
| | | Hi PR | 255 | 256 | 258 | - | 295 | 296 | 298 | - | 336 | 338 | 339 | - | 381 | 383 | 384 | - | 430 | 431 | 433 | - | 482 | 483 | 485 | - |
| | | Lo PR | 126 | 128 | 131 | - | 134 | 135 | 138 | - | 140 | 142 | 145 | - | 146 | 147 | 150 | - | 151 | 153 | 156 | - | 158 | 160 | 163 | - |
| | 3600 | MBh | 107.3 | 108.7 | 111.8 | - | 106.3 | 107.8 | 110.9 | - | 103.6 | 105.1 | 108.2 | - | 99.0 | 100.4 | 103.5 | - | 93.3 | 94.7 | 97.8 | - | 88.1 | 89.5 | 92.6 | - |
| | | S/T | 0.65 | 0.57 | 0.43 | - | 0.65 | 0.57 | 0.43 | - | 0.68 | 0.60 | 0.45 | - | 0.70 | 0.62 | 0.46 | - | 0.73 | 0.64 | 0.48 | - | 0.83 | 0.73 | 0.56 | - |
| | | ΔT | 17.52 | 15.67 | 12.21 | - | 17.47 | 15.62 | 12.16 | - | 17.73 | 15.88 | 12.42 | - | 17.45 | 15.60 | 12.14 | - | 17.21 | 15.35 | 11.90 | - | 18.37 | 16.51 | 13.06 | - |
| | | kW | 5.98 | 5.97 | 5.96 | - | 6.67 | 6.67 | 6.65 | - | 7.45 | 7.44 | 7.43 | - | 8.29 | 8.28 | 8.27 | - | 9.22 | 9.22 | 9.21 | - | 10.32 | 10.32 | 10.31 | - |
| | | Amps | 23.27 | 23.25 | 23.19 | - | 26.45 | 26.43 | 26.37 | - | 30.00 | 29.97 | 29.92 | - | 33.84 | 33.81 | 33.76 | - | 38.13 | 38.10 | 38.05 | - | 43.16 | 43.14 | 43.08 | - |
| | | Hi PR | 258 | 259 | 261 | - | 298 | 299 | 301 | - | 340 | 341 | 343 | - | 385 | 386 | 388 | - | 433 | 434 | 436 | - | 485 | 486 | 488 | - |
| | | Lo PR | 129 | 131 | 134 | - | 137 | 138 | 141 | - | 143 | 145 | 148 | - | 149 | 151 | 154 | - | 154 | 156 | 159 | - | 161 | 163 | 166 | - |
| 75 | 2800 | MBh | 104.4 | 105.8 | 108.9 | 113.7 | 103.4 | 104.9 | 108.0 | 112.7 | 100.7 | 102.2 | 105.3 | 110.0 | 96.1 | 97.5 | 100.6 | 105.4 | 90.4 | 91.8 | 94.9 | 99.7 | 85.2 | 86.6 | 89.7 | 94.5 |
| | | S/T | 0.70 | 0.63 | 0.52 | 0.4 | 0.70 | 0.64 | 0.52 | 0.4 | 0.73 | 0.66 | 0.54 | 0.4 | 0.76 | 0.69 | 0.56 | 0.4 | 0.79 | 0.72 | 0.58 | 0.4 | 0.88 | 0.80 | 0.66 | 0.5 |
| | | ΔT | 23.62 | 21.77 | 18.31 | 14.7 | 23.57 | 21.72 | 18.26 | 14.7 | 23.83 | 21.98 | 18.52 | 14.9 | 23.55 | 21.70 | 18.24 | 14.7 | 23.30 | 21.45 | 17.99 | 14.4 | 24.46 | 22.61 | 19.15 | 15.6 |
| | | kW | 5.91 | 5.90 | 5.89 | 5.9 | 6.60 | 6.60 | 6.58 | 6.6 | 7.38 | 7.37 | 7.36 | 7.4 | 8.22 | 8.21 | 8.20 | 8.3 | 9.15 | 9.15 | 9.14 | 9.2 | 10.25 | 10.25 | 10.24 | 10.3 |
| | | Amps | 22.95 | 22.93 | 22.88 | 23.1 | 26.13 | 26.11 | 26.05 | 26.3 | 29.68 | 29.66 | 29.60 | 29.8 | 33.52 | 33.50 | 33.44 | 33.7 | 37.81 | 37.79 | 37.73 | 38.0 | 42.84 | 42.82 | 42.77 | 43.0 |
| | | Hi PR | 254 | 255 | 257 | 261.1 | 294 | 295 | 297 | 300.9 | 335 | 337 | 338 | 342.7 | 380 | 382 | 383 | 387.7 | 429 | 430 | 432 | 436.2 | 481 | 482 | 484 | 487.9 |
| | | Lo PR | 125 | 126 | 130 | 134.9 | 133 | 134 | 137 | 142.5 | 139 | 141 | 144 | 149.1 | 140 | 146 | 149 | 154.7 | 150 | 152 | 155 | 160.2 | 157 | 159 | 162 | 167.1 |
| | 3025 | MBh | 105.2 | 106.7 | 109.8 | 114.5 | 104.3 | 105.7 | 108.8 | 113.6 | 101.6 | 103.0 | 106.1 | 110.9 | 96.9 | 98.4 | 101.5 | 106.2 | 91.2 | 92.7 | 95.8 | 100.5 | 86.0 | 87.5 | 90.6 | 95.3 |
| | | S/T | 0.73 | 0.66 | 0.54 | 0.4 | 0.73 | 0.66 | 0.54 | 0.4 | 0.76 | 0.69 | 0.56 | 0.4 | 0.79 | 0.71 | 0.58 | 0.4 | 0.83 | 0.75 | 0.60 | 0.5 | 0.92 | 0.84 | 0.68 | 0.5 |
| | | ΔT | 22.98 | 21.13 | 17.67 | 14.1 | 22.93 | 21.08 | 17.62 | 14.0 | 23.19 | 21.34 | 17.88 | 14.3 | 22.91 | 21.06 | 17.60 | 14.0 | 22.67 | 20.81 | 17.36 | 13.8 | 23.83 | 21.97 | 18.51 | 14.9 |
| | | kW | 5.93 | 5.92 | 5.91 | 6.0 | 6.62 | 6.62 | 6.60 | 6.7 | 7.40 | 7.39 | 7.38 | 7.4 | 8.24 | 8.23 | 8.22 | 8.3 | 9.17 | 9.17 | 9.16 | 9.2 | 10.27 | 10.27 | 10.26 | 10.3 |
| | | Amps | 23.05 | 23.02 | 22.97 | 23.2 | 26.23 | 26.20 | 26.15 | 26.4 | 29.78 | 29.75 | 29.70 | 29.9 | 33.62 | 33.59 | 33.54 | 33.8 | 37.91 | 37.88 | 37.83 | 38.1 | 42.94 | 42.91 | 42.86 | 43.1 |
| | | Hi PR | 255 | 256 | 258 | 262.3 | 295 | 296 | 298 | 302.2 | 337 | 338 | 340 | 344.0 | 382 | 383 | 385 | 389.0 | 430 | 431 | 433 | 437.4 | 482 | 483 | 485 | 489.2 |
| | | Lo PR | 126 | 128 | 131 | 136.0 | 134 | 135 | 138 | 143.6 | 139 | 142 | 145 | 150.2 | 139 | 147 | 151 | 155.8 | 151 | 153 | 156 | 161.3 | 158 | 160 | 163 | 168.2 |
| | 3600 | MBh | 107.8 | 109.3 | 112.4 | 117.1 | 106.9 | 108.4 | 111.5 | 116.2 | 104.2 | 105.6 | 108.7 | 113.5 | 99.5 | 101.0 | 104.1 | 108.8 | 93.8 | 95.3 | 98.4 | 103.1 | 88.6 | 90.1 | 93.2 | 97.9 |
| | | S/T | 0.79 | 0.72 | 0.57 | 0.4 | 0.80 | 0.72 | 0.58 | 0.4 | 0.83 | 0.75 | 0.60 | 0.5 | 0.86 | 0.77 | 0.62 | 0.5 | 0.90 | 0.81 | 0.64 | 0.5 | 1.00 | 0.91 | 0.73 | 0.5 |
| | | ΔT | 21.60 | 19.74 | 16.29 | 12.7 | 21.55 | 19.69 | 16.23 | 12.7 | 21.81 | 19.95 | 16.49 | 12.9 | 21.53 | 19.67 | 16.22 | 12.6 | 21.28 | 19.43 | 15.97 | 12.4 | 22.38 | 20.59 | 17.13 | 13.5 |
| | | kW | 5.97 | 5.97 | 5.95 | 6.0 | 6.67 | 6.66 | 6.65 | 6.7 | 7.44 | 7.44 | 7.42 | 7.5 | 8.28 | 8.28 | 8.26 | 8.3 | 9.22 | 9.21 | 9.20 | 9.3 | 10.32 | 10.31 | 10.30 | 10.4 |
| | | Amps | 23.25 | 23.23 | 23.17 | 23.4 | 26.43 | 26.41 | 26.35 | 26.6 | 29.98 | 29.95 | 29.90 | 30.1 | 33.82 | 33.79 | 33.74 | 34.0 | 38.11 | 38.08 | 38.03 | 38.3 | 43.14 | 43.12 | 43.06 | 43.3 |
| | | Hi PR | 258 | 259 | 261 | 265.5 | 298 | 299 | 301 | 305.4 | 340 | 341 | 343 | 347.2 | 385 | 386 | 388 | 392.1 | 433 | 434 | 436 | 440.6 | 485 | 486 | 488 | 492.4 |
| | | Lo PR | 129 | 131 | 134 | 139.2 | 137 | 138 | 141 | 146.8 | 140 | 145 | 148 | 153.4 | 139 | 151 | 154 | 159.0 | 155 | 156 | 159 | 164.5 | 161 | 163 | 166 | 171.4 |

IDB: Entering Indoor Dry Bulb Temperature

Shaded area reflects ACCA (TVA) conditions

kW = Total system power

High and low pressures are measured at the liquid and suction access fittings.

Amps: Unit amps (comp.+ evaporator + condenser fan motors)

Design Subcooling, 16 - 19 °F @ the liquid access fitting connection ARI 95 test conditions. Design Superheat 8 - 12°F @ the compressor suction access fitting connection.

| | | | Outdoor Ambient Temperature | | | | | | | | | | | | | | | | | | | | | | | |
|---|---|---|---|---|---|---|---|---|---|---|---|---|---|---|---|---|---|---|---|---|---|---|---|---|---|---|
| | | | 65 | | | | 75 | | | | 85 | | | | 95 | | | | 105 | | | | 115 | | | |
| | | | Entering Indoor Wet Bulb Temperature | | | | | | | | | | | | | | | | | | | | | | | |
| IDB | Airflow | ID WB | 59 | 63 | 67 | 71 | 59 | 63 | 67 | 71 | 59 | 63 | 67 | 71 | 59 | 63 | 67 | 71 | 59 | 63 | 67 | 71 | 59 | 63 | 67 | 71 |
| 80 | 2800 | MBh | 104.9 | 106.4 | 109.5 | 114.2 | 104.0 | 105.4 | 108.5 | 113.3 | 101.3 | 102.7 | 105.8 | 110.6 | 96.6 | 98.1 | 101.2 | 105.9 | 90.9 | 92.4 | 95.5 | 100.2 | 85.7 | 87.2 | 90.3 | 95.0 |
| | | S/T | 0.81 | 0.75 | 0.63 | 0.5 | 0.82 | 0.75 | 0.63 | 0.5 | 0.85 | 0.78 | 0.66 | 0.5 | 0.88 | 0.81 | 0.68 | 0.5 | 0.93 | 0.85 | 0.71 | 0.6 | 1.00 | 0.94 | 0.79 | 0.6 |
| | | ΔT | 27.72 | 25.87 | 22.41 | 18.8 | 27.67 | 25.82 | 22.36 | 18.8 | 27.93 | 26.08 | 22.62 | 19.0 | 27.65 | 25.80 | 22.34 | 18.8 | 27.41 | 25.55 | 22.09 | 18.5 | 27.82 | 26.71 | 23.25 | 19.7 |
| | | kW | 5.91 | 5.91 | 5.89 | 5.9 | 6.61 | 6.60 | 6.59 | 6.6 | 7.38 | 7.38 | 7.36 | 7.4 | 8.22 | 8.21 | 8.20 | 8.3 | 9.16 | 9.15 | 9.14 | 9.2 | 10.26 | 10.25 | 10.24 | 10.3 |
| | | Amps | 22.97 | 22.95 | 22.89 | 23.1 | 26.15 | 26.13 | 26.07 | 26.3 | 29.70 | 29.67 | 29.62 | 29.9 | 33.54 | 33.51 | 33.46 | 33.7 | 37.83 | 37.80 | 37.75 | 38.0 | 42.86 | 42.84 | 42.78 | 43.0 |
| | | Hi PR | 254 | 255 | 257 | 261.5 | 294 | 295 | 297 | 301.4 | 336 | 337 | 339 | 343.2 | 381 | 382 | 384 | 388.2 | 429 | 430 | 432 | 436.7 | 481 | 482 | 484 | 488.4 |
| | | Lo PR | 126 | 127 | 130 | 135.5 | 128 | 135 | 138 | 143.0 | 128 | 141 | 144 | 149.7 | 145 | 147 | 150 | 155.3 | 151 | 152 | 155 | 160.7 | 158 | 159 | 162 | 167.6 |
| | 3025 | MBh | 105.7 | 107.2 | 110.3 | 115.0 | 104.8 | 106.3 | 109.4 | 114.1 | 102.1 | 103.6 | 106.7 | 111.4 | 97.4 | 98.9 | 102.0 | 106.7 | 91.7 | 93.2 | 96.3 | 101.0 | 86.5 | 88.0 | 91.1 | 95.8 |
| | | S/T | 0.85 | 0.78 | 0.66 | 0.5 | 0.86 | 0.79 | 0.66 | 0.5 | 0.89 | 0.82 | 0.69 | 0.5 | 0.92 | 0.85 | 0.71 | 0.6 | 0.97 | 0.89 | 0.74 | 0.6 | 1.00 | 0.99 | 0.83 | 0.7 |
| | | ΔT | 27.08 | 25.23 | 21.77 | 18.2 | 27.03 | 25.18 | 21.72 | 18.1 | 27.29 | 25.44 | 21.98 | 18.4 | 27.01 | 25.16 | 21.70 | 18.1 | 26.77 | 24.91 | 21.46 | 17.9 | 26.01 | 26.07 | 22.62 | 19.0 |
| | | kW | 5.93 | 5.93 | 5.91 | 6.0 | 6.63 | 6.62 | 6.61 | 6.7 | 7.40 | 7.40 | 7.38 | 7.4 | 8.24 | 8.23 | 8.22 | 8.3 | 9.18 | 9.17 | 9.16 | 9.2 | 10.28 | 10.27 | 10.26 | 10.3 |
| | | Amps | 23.07 | 23.04 | 22.99 | 23.2 | 26.24 | 26.22 | 26.16 | 26.4 | 29.79 | 29.77 | 29.71 | 30.0 | 33.63 | 33.61 | 33.55 | 33.8 | 37.92 | 37.90 | 37.84 | 38.1 | 42.96 | 42.93 | 42.88 | 43.1 |
| | | Hi PR | 256 | 257 | 258 | 262.8 | 295 | 296 | 298 | 302.7 | 337 | 338 | 340 | 344.4 | 382 | 383 | 385 | 389.4 | 431 | 432 | 434 | 437.9 | 482 | 483 | 485 | 489.7 |
| | | Lo PR | 127 | 128 | 131 | 136.6 | 128 | 136 | 139 | 144.1 | 141 | 142 | 145 | 150.8 | 146 | 148 | 151 | 156.4 | 127 | 152 | 157 | 161.9 | 159 | 160 | 163 | 168.7 |
| | 3600 | MBh | 108.4 | 109.8 | 112.9 | 117.7 | 107.4 | 108.9 | 112.0 | 116.7 | 104.7 | 106.2 | 109.3 | 114.0 | 100.1 | 101.5 | 104.6 | 109.4 | 94.4 | 95.8 | 98.9 | 103.7 | 89.2 | 90.6 | 93.7 | 98.5 |
| | | S/T | 0.94 | 0.86 | 0.71 | 0.6 | 0.95 | 0.87 | 0.72 | 0.6 | 0.98 | 0.90 | 0.75 | 0.6 | 1.00 | 0.93 | 0.77 | 0.6 | 1.00 | 0.97 | 0.80 | 0.6 | 1.00 | 1.00 | 0.90 | 0.7 |
| | | ΔT | 25.70 | 23.84 | 20.39 | 16.8 | 25.65 | 23.79 | 20.34 | 16.8 | 25.91 | 24.05 | 20.60 | 17.0 | 25.27 | 23.77 | 20.32 | 16.7 | 23.83 | 23.53 | 20.07 | 16.5 | 22.51 | 22.88 | 21.23 | 17.6 |
| | | kW | 5.98 | 5.97 | 5.96 | 6.0 | 6.67 | 6.66 | 6.65 | 6.7 | 7.45 | 7.44 | 7.43 | 7.5 | 8.28 | 8.28 | 8.27 | 8.3 | 9.22 | 9.22 | 9.20 | 9.3 | 10.32 | 10.32 | 10.30 | 10.4 |
| | | Amps | 23.27 | 23.24 | 23.19 | 23.4 | 26.45 | 26.42 | 26.37 | 26.6 | 30.00 | 29.97 | 29.92 | 30.2 | 33.84 | 33.81 | 33.76 | 34.0 | 38.13 | 38.10 | 38.05 | 38.3 | 43.16 | 43.13 | 43.08 | 43.3 |
| | | Hi PR | 259 | 260 | 262 | 266.0 | 299 | 300 | 301 | 305.9 | 340 | 341 | 343 | 347.6 | 385 | 386 | 388 | 392.6 | 434 | 435 | 437 | 441.1 | 486 | 487 | 488 | 492.9 |
| | | Lo PR | 127 | 131 | 134 | 139.8 | 127 | 139 | 142 | 147.3 | 127 | 145 | 149 | 153.9 | 150 | 151 | 154 | 159.5 | 155 | 153 | 160 | 165.0 | 162 | 162 | 167 | 171.9 |
| 85 | 2800 | MBh | 106.6 | 108.1 | 111.2 | 115.9 | 105.7 | 107.2 | 110.3 | 115.0 | 103.0 | 104.5 | 107.6 | 112.3 | 98.3 | 99.8 | 102.9 | 107.6 | 92.6 | 94.1 | 97.2 | 101.9 | 87.4 | 88.9 | 92.0 | 96.7 |
| | | S/T | 0.91 | 0.84 | 0.72 | 0.6 | 0.91 | 0.85 | 0.73 | 0.6 | 0.94 | 0.88 | 0.75 | 0.6 | 0.98 | 0.91 | 0.78 | 0.6 | 1.00 | 0.96 | 0.82 | 0.7 | 1.00 | 1.00 | 0.90 | 0.7 |
| | | ΔT | 31.36 | 29.51 | 26.05 | 22.5 | 31.31 | 29.46 | 26.00 | 22.4 | 31.57 | 29.72 | 26.26 | 22.7 | 31.29 | 29.44 | 25.98 | 22.4 | 30.08 | 29.19 | 25.73 | 22.1 | 28.39 | 28.87 | 26.89 | 23.3 |
| | | kW | 5.92 | 5.92 | 5.91 | 6.0 | 6.62 | 6.61 | 6.60 | 6.7 | 7.39 | 7.39 | 7.38 | 7.4 | 8.23 | 8.23 | 8.22 | 8.3 | 9.17 | 9.16 | 9.15 | 9.2 | 10.27 | 10.26 | 10.25 | 10.3 |
| | | Amps | 23.03 | 23.01 | 22.95 | 23.2 | 26.21 | 26.19 | 26.13 | 26.4 | 29.76 | 29.73 | 29.68 | 29.9 | 33.60 | 33.57 | 33.52 | 33.8 | 37.89 | 37.86 | 37.81 | 38.1 | 42.92 | 42.90 | 42.84 | 43.1 |
| | | Hi PR | 255 | 257 | 258 | 262.7 | 295 | 296 | 298 | 302.6 | 337 | 338 | 340 | 344.4 | 382 | 383 | 385 | 389.3 | 431 | 432 | 433 | 437.8 | 482 | 483 | 485 | 489.6 |
| | | Lo PR | 127 | 129 | 132 | 137.3 | 135 | 136 | 140 | 144.9 | 142 | 142 | 146 | 151.5 | 115 | 142 | 152 | 157.1 | 153 | 141 | 157 | 162.6 | 160 | 161 | 164 | 169.5 |
| | 3025 | MBh | 107.5 | 108.9 | 112.0 | 116.8 | 106.6 | 108.0 | 111.1 | 115.9 | 103.8 | 105.3 | 108.4 | 113.1 | 99.2 | 100.6 | 103.7 | 108.5 | 93.5 | 95.0 | 98.1 | 102.8 | 88.3 | 89.7 | 92.8 | 97.6 |
| | | S/T | 0.95 | 0.88 | 0.75 | 0.6 | 0.96 | 0.89 | 0.76 | 0.6 | 0.99 | 0.92 | 0.79 | 0.6 | 1.00 | 0.95 | 0.81 | 0.7 | 1.00 | 1.00 | 0.85 | 0.7 | 1.00 | 1.00 | 0.94 | 0.8 |
| | | ΔT | 30.72 | 28.87 | 25.41 | 21.8 | 30.67 | 28.82 | 25.36 | 21.8 | 30.93 | 29.08 | 25.62 | 22.0 | 29.81 | 28.80 | 25.34 | 21.8 | 28.09 | 28.53 | 25.09 | 21.5 | 26.53 | 26.97 | 26.25 | 22.7 |
| | | kW | 5.94 | 5.94 | 5.93 | 6.0 | 6.64 | 6.63 | 6.62 | 6.7 | 7.41 | 7.41 | 7.40 | 7.5 | 8.25 | 8.25 | 8.24 | 8.3 | 9.19 | 9.19 | 9.17 | 9.2 | 10.29 | 10.29 | 10.27 | 10.3 |
| | | Amps | 23.13 | 23.10 | 23.05 | 23.3 | 26.30 | 26.28 | 26.23 | 26.5 | 29.85 | 29.83 | 29.77 | 30.0 | 33.69 | 33.67 | 33.61 | 33.9 | 37.98 | 37.96 | 37.90 | 38.1 | 43.02 | 42.99 | 42.94 | 43.2 |
| | | Hi PR | 257 | 258 | 260 | 264.0 | 297 | 298 | 299 | 303.9 | 338 | 339 | 341 | 345.6 | 383 | 384 | 386 | 390.6 | 432 | 433 | 435 | 439.1 | 484 | 485 | 486 | 490.9 |
| | | Lo PR | 128 | 130 | 133 | 138.5 | 115 | 138 | 141 | 146.0 | 115 | 142 | 147 | 152.6 | 148 | 142 | 153 | 158.2 | 154 | 155 | 158 | 163.7 | 161 | 162 | 165 | 170.6 |
| | 3600 | MBh | 110.1 | 111.6 | 114.7 | 119.4 | 109.2 | 110.6 | 113.7 | 118.5 | 106.5 | 107.9 | 111.0 | 115.8 | 101.8 | 103.3 | 106.4 | 111.1 | 96.1 | 97.6 | 100.7 | 105.4 | 90.9 | 92.4 | 95.5 | 100.2 |
| | | S/T | 1.00 | 0.98 | 0.83 | 0.7 | 1.00 | 0.98 | 0.83 | 0.7 | 1.00 | 1.00 | 0.86 | 0.7 | 1.00 | 1.00 | 0.89 | 0.7 | 1.00 | 1.00 | 0.93 | 0.8 | 1.00 | 1.00 | 1.00 | 0.8 |
| | | ΔT | 27.80 | 27.48 | 24.02 | 20.4 | 27.57 | 27.43 | 23.97 | 20.4 | 26.88 | 27.25 | 24.23 | 20.6 | 25.71 | 26.08 | 23.95 | 20.4 | 24.27 | 24.64 | 23.71 | 20.1 | 22.95 | 23.32 | 24.11 | 21.3 |
| | | kW | 5.99 | 5.98 | 5.97 | 6.0 | 6.68 | 6.68 | 6.67 | 6.7 | 7.46 | 7.45 | 7.44 | 7.5 | 8.30 | 8.29 | 8.28 | 8.3 | 9.24 | 9.23 | 9.22 | 9.3 | 10.33 | 10.33 | 10.32 | 10.4 |
| | | Amps | 23.33 | 23.30 | 23.25 | 23.5 | 26.51 | 26.48 | 26.43 | 26.7 | 30.06 | 30.03 | 29.98 | 30.2 | 33.90 | 33.87 | 33.82 | 34.1 | 38.19 | 38.16 | 38.11 | 38.4 | 43.22 | 43.19 | 43.14 | 43.4 |
| | | Hi PR | 260 | 261 | 263 | 267.2 | 300 | 301 | 303 | 307.0 | 342 | 343 | 344 | 348.8 | 387 | 388 | 389 | 393.8 | 435 | 436 | 438 | 442.3 | 487 | 488 | 490 | 494.0 |
| | | Lo PR | 132 | 132 | 136 | 141.6 | 139 | 139 | 144 | 149.2 | 146 | 147 | 151 | 155.8 | 151 | 153 | 156 | 161.4 | 157 | 158 | 162 | 166.9 | 164 | 165 | 170 | 173.8 |

IDB: Entering Indoor Dry Bulb Temperature

Shaded area reflects ACCA (TVA) conditions

kW = Total system power

High and low pressures are measured at the liquid and suction access fittings.

Amps: Unit amps (comp.+ evaporator + condenser fan motors)

Design Subcooling, 16 - 19 °F @ the liquid access fitting connection ARI 95 test conditions. Design Superheat 8 - 12°F @ the compressor suction access fitting connection.

| | | | Outdoor Ambient Temperature | | | | | | | | | | | | | | | | | | | | | | | |
|---|---|---|---|---|---|---|---|---|---|---|---|---|---|---|---|---|---|---|---|---|---|---|---|---|---|---|
| | | | 65 | | | | 75 | | | | 85 | | | | 95 | | | | 105 | | | | 115 | | | |
| | | | Entering Indoor Wet Bulb Temperature | | | | | | | | | | | | | | | | | | | | | | | |
| IDB | Airflow | ID WB | 59 | 63 | 67 | 71 | 59 | 63 | 67 | 71 | 59 | 63 | 67 | 71 | 59 | 63 | 67 | 71 | 59 | 63 | 67 | 71 | 59 | 63 | 67 | 71 |
| 70 | 3250 | MBh | 118.6 | 120.3 | 123.8 | - | 117.6 | 119.3 | 122.8 | - | 114.5 | 116.2 | 119.7 | - | 109.2 | 110.9 | 114.4 | - | 102.7 | 104.4 | 107.9 | - | 96.8 | 98.5 | 102.0 | - |
| | | S/T | 0.54 | 0.48 | 0.38 | - | 0.54 | 0.48 | 0.38 | - | 0.57 | 0.50 | 0.40 | - | 0.58 | 0.52 | 0.41 | - | 0.61 | 0.55 | 0.42 | - | 0.69 | 0.62 | 0.48 | - |
| | | ΔT | 17.91 | 16.21 | 13.04 | - | 17.87 | 16.17 | 12.99 | - | 18.11 | 16.41 | 13.23 | - | 17.85 | 16.15 | 12.98 | - | 17.62 | 15.92 | 12.75 | - | 18.69 | 16.99 | 13.81 | - |
| | | kW | 6.74 | 6.74 | 6.72 | - | 7.53 | 7.52 | 7.51 | - | 8.40 | 8.40 | 8.38 | - | 9.35 | 9.34 | 9.33 | - | 10.41 | 10.40 | 10.39 | - | 11.65 | 11.64 | 11.63 | - |
| | | Amps | 25.45 | 25.42 | 25.36 | - | 29.04 | 29.01 | 28.95 | - | 33.05 | 33.02 | 32.96 | - | 37.38 | 37.35 | 37.29 | - | 42.23 | 42.20 | 42.14 | - | 47.91 | 47.88 | 47.82 | - |
| | | Hi PR | 260 | 261 | 263 | - | 301 | 302 | 304 | - | 343 | 344 | 346 | - | 389 | 391 | 392 | - | 439 | 440 | 442 | - | 492 | 493 | 495 | - |
| | | Lo PR | 123 | 124 | 127 | - | 130 | 132 | 135 | - | 137 | 138 | 141 | - | 142 | 144 | 147 | - | 147 | 149 | 152 | - | 154 | 156 | 159 | - |
| | 3500 | MBh | 119.6 | 121.2 | 124.8 | - | 118.5 | 120.2 | 123.7 | - | 115.4 | 117.1 | 120.6 | - | 110.1 | 111.8 | 115.3 | - | 103.6 | 105.3 | 108.8 | - | 97.7 | 99.4 | 102.9 | - |
| | | S/T | 0.56 | 0.50 | 0.39 | - | 0.56 | 0.50 | 0.39 | - | 0.59 | 0.52 | 0.40 | - | 0.60 | 0.54 | 0.41 | - | 0.63 | 0.56 | 0.43 | - | 0.71 | 0.64 | 0.50 | - |
| | | ΔT | 17.35 | 15.65 | 12.48 | - | 17.31 | 15.61 | 12.43 | - | 17.54 | 15.85 | 12.67 | - | 17.29 | 15.59 | 12.42 | - | 17.06 | 15.36 | 12.19 | - | 18.13 | 16.43 | 13.25 | - |
| | | kW | 6.76 | 6.76 | 6.74 | - | 7.55 | 7.54 | 7.53 | - | 8.42 | 8.42 | 8.40 | - | 9.37 | 9.37 | 9.35 | - | 10.43 | 10.42 | 10.41 | - | 11.67 | 11.67 | 11.65 | - |
| | | Amps | 25.55 | 25.52 | 25.46 | - | 29.14 | 29.11 | 29.05 | - | 33.15 | 33.12 | 33.06 | - | 37.48 | 37.46 | 37.39 | - | 42.33 | 42.30 | 42.24 | - | 48.01 | 47.98 | 47.92 | - |
| | | Hi PR | 261 | 262 | 264 | - | 302 | 303 | 305 | - | 345 | 346 | 348 | - | 391 | 392 | 394 | - | 440 | 441 | 443 | - | 493 | 494 | 496 | - |
| | | Lo PR | 124 | 125 | 128 | - | 131 | 133 | 136 | - | 138 | 139 | 142 | - | 143 | 145 | 148 | - | 149 | 150 | 153 | - | 155 | 157 | 160 | - |
| | 4150 | MBh | 122.5 | 124.1 | 127.7 | - | 121.4 | 123.1 | 126.6 | - | 118.3 | 120.0 | 123.5 | - | 113.0 | 114.7 | 118.2 | - | 106.5 | 108.2 | 111.7 | - | 100.6 | 102.3 | 105.8 | - |
| | | S/T | 0.60 | 0.53 | 0.40 | - | 0.60 | 0.53 | 0.40 | - | 0.63 | 0.56 | 0.42 | - | 0.65 | 0.57 | 0.43 | - | 0.68 | 0.60 | 0.45 | - | 0.77 | 0.68 | 0.52 | - |
| | | ΔT | 16.11 | 14.41 | 11.23 | - | 16.06 | 14.36 | 11.19 | - | 16.30 | 14.60 | 11.43 | - | 16.04 | 14.34 | 11.17 | - | 15.82 | 14.12 | 10.94 | - | 16.88 | 15.18 | 12.01 | - |
| | | kW | 6.81 | 6.81 | 6.79 | - | 7.60 | 7.59 | 7.58 | - | 8.47 | 8.47 | 8.45 | - | 9.42 | 9.41 | 9.40 | - | 10.48 | 10.47 | 10.46 | - | 11.72 | 11.71 | 11.70 | - |
| | | Amps | 25.78 | 25.75 | 25.69 | - | 29.37 | 29.34 | 29.28 | - | 33.37 | 33.34 | 33.28 | - | 37.71 | 37.68 | 37.62 | - | 42.55 | 42.53 | 42.46 | - | 48.24 | 48.21 | 48.15 | - |
| | | Hi PR | 264 | 265 | 267 | - | 305 | 306 | 308 | - | 348 | 349 | 351 | - | 394 | 395 | 397 | - | 443 | 445 | 446 | - | 496 | 498 | 499 | - |
| | | Lo PR | 127 | 128 | 131 | - | 134 | 136 | 139 | - | 141 | 142 | 145 | - | 146 | 148 | 151 | - | 152 | 153 | 156 | - | 158 | 160 | 163 | - |
| 75 | 3250 | MBh | 118.7 | 120.4 | 123.9 | 129.3 | 117.7 | 119.3 | 122.9 | 128.2 | 114.6 | 116.2 | 119.8 | 125.2 | 109.3 | 110.9 | 114.5 | 119.9 | 102.8 | 104.5 | 108.0 | 113.4 | 96.9 | 98.5 | 102.1 | 107.5 |
| | | S/T | 0.65 | 0.59 | 0.48 | 0.4 | 0.66 | 0.60 | 0.49 | 0.4 | 0.68 | 0.62 | 0.51 | 0.4 | 0.71 | 0.64 | 0.52 | 0.4 | 0.74 | 0.67 | 0.55 | 0.4 | 0.83 | 0.75 | 0.61 | 0.5 |
| | | ΔT | 21.65 | 19.95 | 16.78 | 13.5 | 21.60 | 19.90 | 16.73 | 13.4 | 21.84 | 20.14 | 16.97 | 13.7 | 21.59 | 19.89 | 16.71 | 13.4 | 21.36 | 19.66 | 16.49 | 13.2 | 22.42 | 20.72 | 17.55 | 14.3 |
| | | kW | 6.74 | 6.73 | 6.72 | 6.8 | 7.52 | 7.51 | 7.50 | 7.6 | 8.40 | 8.39 | 8.38 | 8.4 | 9.34 | 9.34 | 9.32 | 9.4 | 10.40 | 10.40 | 10.38 | 10.4 | 11.64 | 11.64 | 11.63 | 11.7 |
| | | Amps | 25.43 | 25.40 | 25.34 | 25.6 | 29.02 | 28.99 | 28.93 | 29.2 | 33.02 | 32.99 | 32.93 | 33.2 | 37.36 | 37.33 | 37.27 | 37.5 | 42.20 | 42.18 | 42.11 | 42.4 | 47.89 | 47.86 | 47.80 | 48.1 |
| | | Hi PR | 260 | 261 | 263 | 267.4 | 301 | 302 | 304 | 308.2 | 344 | 345 | 347 | 351.0 | 390 | 391 | 393 | 397.1 | 439 | 440 | 442 | 446.7 | 492 | 493 | 495 | 499.7 |
| | | Lo PR | 123 | 124 | 127 | 132.5 | 130 | 132 | 135 | 139.9 | 137 | 138 | 141 | 146.4 | 140 | 144 | 147 | 151.9 | 147 | 149 | 152 | 157.3 | 154 | 156 | 159 | 164.0 |
| | 3500 | MBh | 119.6 | 121.3 | 124.8 | 130.2 | 118.6 | 120.2 | 123.8 | 129.2 | 115.5 | 117.2 | 120.7 | 126.1 | 110.2 | 111.9 | 115.4 | 120.8 | 103.7 | 105.4 | 108.9 | 114.3 | 97.8 | 99.5 | 103.0 | 108.4 |
| | | S/T | 0.68 | 0.62 | 0.50 | 0.4 | 0.68 | 0.62 | 0.50 | 0.4 | 0.71 | 0.64 | 0.52 | 0.4 | 0.73 | 0.67 | 0.54 | 0.4 | 0.77 | 0.70 | 0.56 | 0.4 | 0.86 | 0.78 | 0.64 | 0.5 |
| | | ΔT | 21.09 | 19.39 | 16.22 | 12.9 | 21.04 | 19.34 | 16.17 | 12.9 | 21.28 | 19.58 | 16.41 | 13.1 | 21.03 | 19.33 | 16.15 | 12.9 | 20.80 | 19.10 | 15.93 | 12.6 | 21.86 | 20.16 | 16.99 | 13.7 |
| | | kW | 6.76 | 6.75 | 6.74 | 6.8 | 7.54 | 7.54 | 7.52 | 7.6 | 8.42 | 8.41 | 8.40 | 8.5 | 9.37 | 9.36 | 9.35 | 9.4 | 10.42 | 10.42 | 10.41 | 10.5 | 11.67 | 11.66 | 11.65 | 11.7 |
| | | Amps | 25.53 | 25.50 | 25.44 | 25.7 | 29.12 | 29.09 | 29.03 | 29.3 | 33.12 | 33.10 | 33.03 | 33.3 | 37.46 | 37.43 | 37.37 | 37.6 | 42.31 | 42.28 | 42.22 | 42.5 | 47.99 | 47.96 | 47.90 | 48.2 |
| | | Hi PR | 261 | 262 | 264 | 268.6 | 302 | 303 | 305 | 309.5 | 345 | 346 | 348 | 352.3 | 391 | 392 | 394 | 398.3 | 441 | 442 | 443 | 448.0 | 494 | 495 | 496 | 501.0 |
| | | Lo PR | 124 | 125 | 128 | 133.5 | 131 | 133 | 136 | 141.0 | 138 | 139 | 142 | 147.5 | 139 | 145 | 148 | 152.9 | 149 | 150 | 153 | 158.3 | 155 | 157 | 160 | 165.1 |
| | 4150 | MBh | 122.5 | 124.2 | 127.7 | 133.1 | 121.5 | 123.1 | 126.7 | 132.1 | 118.4 | 120.1 | 123.6 | 129.0 | 113.1 | 114.8 | 118.3 | 123.7 | 106.6 | 108.3 | 111.8 | 117.2 | 100.7 | 102.4 | 105.9 | 111.3 |
| | | S/T | 0.74 | 0.67 | 0.54 | 0.4 | 0.74 | 0.67 | 0.54 | 0.4 | 0.77 | 0.70 | 0.56 | 0.4 | 0.80 | 0.72 | 0.58 | 0.4 | 0.84 | 0.75 | 0.60 | 0.4 | 0.93 | 0.84 | 0.68 | 0.5 |
| | | ΔT | 19.84 | 18.14 | 14.97 | 11.7 | 19.80 | 18.10 | 14.92 | 11.6 | 20.04 | 18.34 | 15.16 | 11.9 | 19.78 | 18.08 | 14.91 | 11.6 | 19.55 | 17.85 | 14.68 | 11.4 | 20.62 | 18.92 | 15.74 | 12.5 |
| | | kW | 6.81 | 6.80 | 6.79 | 6.8 | 7.59 | 7.59 | 7.57 | 7.6 | 8.47 | 8.46 | 8.45 | 8.5 | 9.42 | 9.41 | 9.40 | 9.5 | 10.47 | 10.47 | 10.45 | 10.5 | 11.72 | 11.71 | 11.70 | 11.8 |
| | | Amps | 25.75 | 25.72 | 25.66 | 25.9 | 29.34 | 29.31 | 29.25 | 29.5 | 33.35 | 33.32 | 33.26 | 33.5 | 37.69 | 37.66 | 37.60 | 37.9 | 42.53 | 42.50 | 42.44 | 42.7 | 48.21 | 48.19 | 48.12 | 48.4 |
| | | Hi PR | 264 | 265 | 267 | 271.8 | 305 | 306 | 308 | 312.7 | 348 | 349 | 351 | 355.4 | 394 | 395 | 397 | 401.5 | 444 | 445 | 447 | 451.2 | 497 | 498 | 500 | 504.2 |
| | | Lo PR | 127 | 128 | 131 | 136.6 | 134 | 136 | 139 | 144.0 | 139 | 142 | 145 | 150.5 | 140 | 148 | 151 | 156.0 | 152 | 153 | 156 | 161.4 | 139 | 160 | 163 | 168.1 |

IDB: Entering Indoor Dry Bulb Temperature

Shaded area reflects ACCA (TVA) conditions

kW = Total system power

High and low pressures are measured at the liquid and suction access fittings.

Amps: Unit amps (comp.+ evaporator + condenser fan motors)

Design Subcooling, 16 - 19 °F @ the liquid access fitting connection ARI 95 test conditions. Design Superheat 8 - 12°F @ the compressor suction access fitting connection.

| | | | Outdoor Ambient Temperature | | | | | | | | | | | | | | | | | | | | | | | |
|---|---|---|---|---|---|---|---|---|---|---|---|---|---|---|---|---|---|---|---|---|---|---|---|---|---|---|
| | | | 65 | | | | 75 | | | | 85 | | | | 95 | | | | 105 | | | | 115 | | | |
| | | | Entering Indoor Wet Bulb Temperature | | | | | | | | | | | | | | | | | | | | | | | |
| IDB | Airflow | ID WB | 59 | 63 | 67 | 71 | 59 | 63 | 67 | 71 | 59 | 63 | 67 | 71 | 59 | 63 | 67 | 71 | 59 | 63 | 67 | 71 | 59 | 63 | 67 | 71 |
| 80 | 3250 | MBh | 119.3 | 121.0 | 124.5 | 129.9 | 118.3 | 119.9 | 123.5 | 128.8 | 115.2 | 116.9 | 120.4 | 125.8 | 109.9 | 111.6 | 115.1 | 120.5 | 103.4 | 105.1 | 108.6 | 114.0 | 97.5 | 99.2 | 102.7 | 108.1 |
| | | S/T | 0.76 | 0.70 | 0.59 | 0.5 | 0.77 | 0.71 | 0.59 | 0.5 | 0.79 | 0.73 | 0.62 | 0.5 | 0.82 | 0.76 | 0.64 | 0.5 | 0.87 | 0.80 | 0.67 | 0.5 | 0.96 | 0.88 | 0.74 | 0.6 |
| | | ΔT | 25.41 | 23.71 | 20.54 | 17.3 | 25.37 | 23.67 | 20.49 | 17.2 | 25.61 | 23.91 | 20.73 | 17.4 | 25.35 | 23.65 | 20.48 | 17.2 | 25.12 | 23.42 | 20.25 | 17.0 | 26.19 | 24.49 | 21.31 | 18.0 |
| | | kW | 6.74 | 6.73 | 6.72 | 6.8 | 7.53 | 7.52 | 7.51 | 7.6 | 8.40 | 8.39 | 8.38 | 8.4 | 9.35 | 9.34 | 9.33 | 9.4 | 10.41 | 10.40 | 10.39 | 10.4 | 11.65 | 11.64 | 11.63 | 11.7 |
| | | Amps | 25.44 | 25.42 | 25.35 | 25.6 | 29.03 | 29.01 | 28.94 | 29.2 | 33.04 | 33.01 | 32.95 | 33.2 | 37.38 | 37.35 | 37.29 | 37.6 | 42.22 | 42.19 | 42.13 | 42.4 | 47.91 | 47.88 | 47.82 | 48.1 |
| | | Hi PR | 260 | 262 | 263 | 267.9 | 301 | 302 | 304 | 308.7 | 344 | 345 | 347 | 351.5 | 390 | 391 | 393 | 397.6 | 440 | 441 | 443 | 447.2 | 493 | 494 | 496 | 500.2 |
| | | Lo PR | 123 | 125 | 128 | 133.0 | 128 | 132 | 135 | 140.5 | 128 | 139 | 142 | 146.9 | 143 | 144 | 147 | 152.4 | 148 | 150 | 153 | 157.8 | 127 | 156 | 159 | 164.6 |
| | 3500 | MBh | 120.2 | 121.9 | 125.4 | 130.8 | 119.2 | 120.9 | 124.4 | 129.8 | 116.1 | 117.8 | 121.3 | 126.7 | 110.8 | 112.5 | 116.0 | 121.4 | 104.3 | 106.0 | 109.5 | 114.9 | 98.4 | 100.1 | 103.6 | 109.0 |
| | | S/T | 0.80 | 0.73 | 0.61 | 0.5 | 0.80 | 0.74 | 0.62 | 0.5 | 0.83 | 0.76 | 0.64 | 0.5 | 0.86 | 0.79 | 0.66 | 0.5 | 0.91 | 0.83 | 0.69 | 0.5 | 1.00 | 0.92 | 0.77 | 0.6 |
| | | ΔT | 24.85 | 23.15 | 19.98 | 16.7 | 24.81 | 23.11 | 19.93 | 16.6 | 25.04 | 23.35 | 20.17 | 16.9 | 24.79 | 23.09 | 19.92 | 16.6 | 24.56 | 22.86 | 19.69 | 16.4 | 25.56 | 23.93 | 20.75 | 17.5 |
| | | kW | 6.76 | 6.76 | 6.74 | 6.8 | 7.55 | 7.54 | 7.53 | 7.6 | 8.42 | 8.42 | 8.40 | 8.5 | 9.37 | 9.36 | 9.35 | 9.4 | 10.43 | 10.42 | 10.41 | 10.5 | 11.67 | 11.66 | 11.65 | 11.7 |
| | | Amps | 25.55 | 25.52 | 25.46 | 25.7 | 29.14 | 29.11 | 29.05 | 29.3 | 33.14 | 33.11 | 33.05 | 33.3 | 37.48 | 37.45 | 37.39 | 37.7 | 42.32 | 42.30 | 42.23 | 42.5 | 48.01 | 47.98 | 47.92 | 48.2 |
| | | Hi PR | 262 | 263 | 265 | 269.1 | 303 | 304 | 305 | 310.0 | 345 | 346 | 348 | 352.7 | 391 | 392 | 394 | 398.8 | 441 | 442 | 444 | 448.5 | 494 | 495 | 497 | 501.5 |
| | | Lo PR | 124 | 126 | 129 | 134.1 | 128 | 133 | 136 | 141.5 | 138 | 140 | 143 | 148.0 | 144 | 145 | 148 | 153.5 | 127 | 151 | 154 | 158.9 | 156 | 157 | 160 | 165.6 |
| | 4150 | MBh | 123.1 | 124.8 | 128.3 | 133.7 | 122.1 | 123.8 | 127.3 | 132.7 | 119.0 | 120.7 | 124.2 | 129.6 | 113.7 | 115.4 | 118.9 | 124.3 | 107.2 | 108.9 | 112.4 | 117.8 | 101.3 | 103.0 | 106.5 | 111.9 |
| | | S/T | 0.88 | 0.80 | 0.67 | 0.5 | 0.88 | 0.81 | 0.67 | 0.5 | 0.91 | 0.84 | 0.70 | 0.6 | 0.95 | 0.86 | 0.72 | 0.6 | 0.99 | 0.91 | 0.75 | 0.6 | 1.00 | 1.00 | 0.84 | 0.7 |
| | | ΔT | 23.61 | 21.91 | 18.73 | 15.4 | 23.56 | 21.86 | 18.69 | 15.4 | 23.80 | 22.10 | 18.93 | 15.6 | 23.54 | 21.84 | 18.67 | 15.4 | 23.32 | 21.62 | 18.44 | 15.2 | 22.19 | 22.56 | 19.51 | 16.2 |
| | | kW | 6.81 | 6.81 | 6.79 | 6.9 | 7.60 | 7.59 | 7.58 | 7.6 | 8.47 | 8.47 | 8.45 | 8.5 | 9.42 | 9.41 | 9.40 | 9.5 | 10.48 | 10.47 | 10.46 | 10.5 | 11.72 | 11.71 | 11.70 | 11.8 |
| | | Amps | 25.77 | 25.74 | 25.68 | 26.0 | 29.36 | 29.33 | 29.27 | 29.5 | 33.37 | 33.34 | 33.28 | 33.6 | 37.70 | 37.68 | 37.61 | 37.9 | 42.55 | 42.52 | 42.46 | 42.7 | 48.23 | 48.21 | 48.14 | 48.4 |
| | | Hi PR | 265 | 266 | 268 | 272.3 | 306 | 307 | 309 | 313.1 | 348 | 350 | 351 | 355.9 | 395 | 396 | 397 | 402.0 | 444 | 445 | 447 | 451.6 | 497 | 498 | 500 | 504.6 |
| | | Lo PR | 127 | 129 | 132 | 137.1 | 127 | 136 | 139 | 144.5 | 127 | 143 | 146 | 151.0 | 127 | 148 | 151 | 156.5 | 127 | 152 | 157 | 161.9 | 159 | 162 | 163 | 168.7 |
| 85 | 3250 | MBh | 121.3 | 123.0 | 126.5 | 131.9 | 120.3 | 121.9 | 125.5 | 130.8 | 117.2 | 118.8 | 122.4 | 127.8 | 111.9 | 113.5 | 117.1 | 122.5 | 105.4 | 107.1 | 110.6 | 116.0 | 99.5 | 101.1 | 104.7 | 110.1 |
| | | S/T | 0.85 | 0.79 | 0.67 | 0.6 | 0.85 | 0.79 | 0.68 | 0.6 | 0.88 | 0.82 | 0.70 | 0.6 | 0.92 | 0.85 | 0.73 | 0.6 | 0.97 | 0.89 | 0.76 | 0.6 | 1.00 | 0.98 | 0.84 | 0.7 |
| | | ΔT | 28.75 | 27.05 | 23.88 | 20.6 | 28.70 | 27.00 | 23.83 | 20.5 | 28.94 | 27.24 | 24.07 | 20.8 | 28.69 | 26.99 | 23.81 | 20.5 | 28.46 | 26.76 | 23.59 | 20.3 | 27.83 | 27.82 | 24.65 | 21.4 |
| | | kW | 6.76 | 6.75 | 6.74 | 6.8 | 7.54 | 7.53 | 7.52 | 7.6 | 8.42 | 8.41 | 8.40 | 8.5 | 9.36 | 9.36 | 9.34 | 9.4 | 10.42 | 10.42 | 10.40 | 10.5 | 11.66 | 11.66 | 11.64 | 11.7 |
| | | Amps | 25.51 | 25.48 | 25.42 | 25.7 | 29.10 | 29.07 | 29.01 | 29.3 | 33.11 | 33.08 | 33.02 | 33.3 | 37.45 | 37.42 | 37.36 | 37.6 | 42.29 | 42.26 | 42.20 | 42.5 | 47.98 | 47.95 | 47.89 | 48.2 |
| | | Hi PR | 262 | 263 | 265 | 269.1 | 302 | 304 | 305 | 309.9 | 345 | 346 | 348 | 352.7 | 391 | 392 | 394 | 398.8 | 441 | 442 | 444 | 448.4 | 494 | 495 | 497 | 501.4 |
| | | Lo PR | 125 | 127 | 130 | 134.9 | 132 | 134 | 137 | 142.3 | 139 | 140 | 144 | 148.8 | 115 | 142 | 149 | 154.3 | 115 | 142 | 154 | 159.7 | 157 | 141 | 161 | 166.4 |
| | 3500 | MBh | 122.2 | 123.9 | 127.4 | 132.8 | 121.2 | 122.8 | 126.4 | 131.8 | 118.1 | 119.8 | 123.3 | 128.7 | 112.8 | 114.5 | 118.0 | 123.4 | 106.3 | 108.0 | 111.5 | 116.9 | 100.4 | 102.1 | 105.6 | 111.0 |
| | | S/T | 0.89 | 0.82 | 0.70 | 0.6 | 0.89 | 0.83 | 0.71 | 0.6 | 0.93 | 0.86 | 0.73 | 0.6 | 0.96 | 0.89 | 0.76 | 0.6 | 1.00 | 0.93 | 0.79 | 0.7 | 1.00 | 1.00 | 0.88 | 0.7 |
| | | ΔT | 28.19 | 26.49 | 23.32 | 20.0 | 28.14 | 26.44 | 23.27 | 20.0 | 28.38 | 26.68 | 23.51 | 20.2 | 28.13 | 26.43 | 23.25 | 20.0 | 27.61 | 26.20 | 23.03 | 19.7 | 26.08 | 26.51 | 24.09 | 20.8 |
| | | kW | 6.78 | 6.77 | 6.76 | 6.8 | 7.56 | 7.56 | 7.54 | 7.6 | 8.44 | 8.43 | 8.42 | 8.5 | 9.39 | 9.38 | 9.37 | 9.4 | 10.44 | 10.44 | 10.42 | 10.5 | 11.69 | 11.68 | 11.67 | 11.7 |
| | | Amps | 25.61 | 25.59 | 25.53 | 25.8 | 29.20 | 29.18 | 29.11 | 29.4 | 33.21 | 33.18 | 33.12 | 33.4 | 37.55 | 37.52 | 37.46 | 37.7 | 42.39 | 42.36 | 42.30 | 42.6 | 48.08 | 48.05 | 47.99 | 48.3 |
| | | Hi PR | 263 | 264 | 266 | 270.3 | 304 | 305 | 307 | 311.2 | 346 | 348 | 349 | 354.0 | 393 | 394 | 396 | 400.0 | 442 | 443 | 445 | 449.7 | 495 | 496 | 498 | 502.7 |
| | | Lo PR | 126 | 128 | 131 | 135.9 | 115 | 135 | 138 | 143.3 | 115 | 142 | 145 | 149.8 | 114 | 142 | 150 | 155.3 | 151 | 142 | 156 | 160.7 | 158 | 159 | 162 | 167.5 |
| | 4150 | MBh | 125.1 | 126.8 | 130.3 | 135.7 | 124.1 | 125.7 | 129.3 | 134.7 | 121.0 | 122.7 | 126.2 | 131.6 | 115.7 | 117.4 | 120.9 | 126.3 | 109.2 | 110.9 | 114.4 | 119.8 | 103.3 | 105.0 | 108.5 | 113.9 |
| | | S/T | 0.98 | 0.91 | 0.77 | 0.6 | 0.99 | 0.91 | 0.78 | 0.6 | 1.00 | 0.95 | 0.81 | 0.7 | 1.00 | 0.98 | 0.83 | 0.7 | 1.00 | 1.00 | 0.87 | 0.7 | 1.00 | 1.00 | 0.96 | 0.8 |
| | | ΔT | 26.94 | 25.24 | 22.07 | 18.8 | 26.90 | 25.20 | 22.02 | 18.7 | 26.51 | 25.44 | 22.26 | 19.0 | 25.34 | 25.18 | 22.01 | 18.7 | 23.92 | 24.29 | 21.78 | 18.5 | 22.63 | 22.99 | 22.84 | 19.6 |
| | | kW | 6.83 | 6.82 | 6.81 | 6.9 | 7.61 | 7.61 | 7.59 | 7.7 | 8.49 | 8.48 | 8.47 | 8.5 | 9.43 | 9.43 | 9.41 | 9.5 | 10.49 | 10.49 | 10.47 | 10.5 | 11.74 | 11.73 | 11.72 | 11.8 |
| | | Amps | 25.84 | 25.81 | 25.75 | 26.0 | 29.43 | 29.40 | 29.34 | 29.6 | 33.44 | 33.41 | 33.35 | 33.6 | 37.77 | 37.74 | 37.68 | 38.0 | 42.62 | 42.59 | 42.53 | 42.8 | 48.30 | 48.27 | 48.21 | 48.5 |
| | | Hi PR | 266 | 267 | 269 | 273.5 | 307 | 308 | 310 | 314.4 | 350 | 351 | 353 | 357.1 | 396 | 397 | 399 | 403.2 | 445 | 447 | 448 | 452.9 | 498 | 500 | 501 | 505.9 |
| | | Lo PR | 115 | 129 | 134 | 138.9 | 114 | 137 | 141 | 146.4 | 143 | 142 | 148 | 152.9 | 149 | 142 | 153 | 158.4 | 154 | 155 | 159 | 163.7 | 161 | 162 | 165 | 170.5 |

IDB: Entering Indoor Dry Bulb Temperature

Shaded area reflects ACCA (TVA) conditions

kW = Total system power

High and low pressures are measured at the liquid and suction access fittings.

Amps: Unit amps (comp.+ evaporator + condenser fan motors)

Design Subcooling, 16 - 19 °F @ the liquid access fitting connection ARI 95 test conditions. Design Superheat 8 - 12°F @ the compressor suction access fitting connection.

| | | | Outdoor Ambient Temperature | | | | | | | | | | | | | | | | | | | | | | | |
|---|---|---|---|---|---|---|---|---|---|---|---|---|---|---|---|---|---|---|---|---|---|---|---|---|---|---|
| | | | 65 | | | | 75 | | | | 85 | | | | 95 | | | | 105 | | | | 115 | | | |
| | | | Entering Indoor Wet Bulb Temperature | | | | | | | | | | | | | | | | | | | | | | | |
| IDB | Airflow | ID WB | 59 | 63 | 67 | 71 | 59 | 63 | 67 | 71 | 59 | 63 | 67 | 71 | 59 | 63 | 67 | 71 | 59 | 63 | 67 | 71 | 59 | 63 | 67 | 71 |
| 70 | 3500 | MBh | 140.4 | 142.4 | 146.6 | - | 139.2 | 141.1 | 145.3 | - | 135.5 | 137.5 | 141.7 | - | 129.2 | 131.2 | 135.4 | - | 121.5 | 123.5 | 127.7 | - | 114.4 | 116.4 | 120.6 | - |
| | | S/T | 0.58 | 0.52 | 0.40 | - | 0.58 | 0.52 | 0.41 | - | 0.61 | 0.54 | 0.42 | - | 0.63 | 0.56 | 0.43 | - | 0.66 | 0.58 | 0.45 | - | 0.74 | 0.66 | 0.52 | - |
| | | ΔT | 21.08 | 19.09 | 15.37 | - | 21.03 | 19.04 | 15.31 | - | 21.31 | 19.32 | 15.59 | - | 21.01 | 19.02 | 15.29 | - | 20.74 | 18.75 | 15.03 | - | 21.99 | 20.00 | 16.28 | - |
| | | kW | 8.25 | 8.24 | 8.22 | - | 9.25 | 9.24 | 9.23 | - | 10.37 | 10.37 | 10.35 | - | 11.59 | 11.58 | 11.56 | - | 12.94 | 12.93 | 12.91 | - | 14.53 | 14.52 | 14.50 | - |
| | | Amps | 31.35 | 31.31 | 31.23 | - | 35.94 | 35.90 | 35.82 | - | 41.07 | 41.03 | 40.95 | - | 46.61 | 46.58 | 46.50 | - | 52.81 | 52.78 | 52.70 | - | 60.09 | 60.05 | 59.97 | - |
| | | Hi PR | 264 | 265 | 267 | - | 306 | 307 | 309 | - | 349 | 350 | 352 | - | 396 | 397 | 399 | - | 447 | 448 | 450 | - | 500 | 502 | 503 | - |
| | | Lo PR | 124 | 126 | 129 | - | 132 | 133 | 136 | - | 138 | 140 | 143 | - | 144 | 146 | 149 | - | 149 | 151 | 154 | - | 156 | 158 | 161 | - |
| | 3800 | MBh | 141.5 | 143.5 | 147.7 | - | 140.3 | 142.3 | 146.4 | - | 136.6 | 138.6 | 142.8 | - | 130.3 | 132.3 | 136.5 | - | 122.6 | 124.6 | 128.8 | - | 115.5 | 117.5 | 121.7 | - |
| | | S/T | 0.60 | 0.53 | 0.41 | - | 0.60 | 0.54 | 0.42 | - | 0.63 | 0.56 | 0.44 | - | 0.65 | 0.58 | 0.45 | - | 0.68 | 0.60 | 0.46 | - | 0.77 | 0.69 | 0.53 | - |
| | | ΔT | 20.35 | 18.36 | 14.64 | - | 20.30 | 18.30 | 14.58 | - | 20.58 | 18.58 | 14.86 | - | 20.28 | 18.28 | 14.56 | - | 20.01 | 18.02 | 14.29 | - | 21.26 | 19.27 | 15.54 | - |
| | | kW | 8.28 | 8.27 | 8.26 | - | 9.28 | 9.28 | 9.26 | - | 10.40 | 10.40 | 10.38 | - | 11.62 | 11.61 | 11.59 | - | 12.97 | 12.96 | 12.95 | - | 14.56 | 14.55 | 14.54 | - |
| | | Amps | 31.49 | 31.45 | 31.38 | - | 36.08 | 36.05 | 35.97 | - | 41.21 | 41.17 | 41.10 | - | 46.76 | 46.72 | 46.64 | - | 52.96 | 52.92 | 52.84 | - | 60.23 | 60.19 | 60.12 | - |
| | | Hi PR | 265 | 267 | 268 | - | 307 | 308 | 310 | - | 351 | 352 | 354 | - | 397 | 399 | 400 | - | 448 | 449 | 451 | - | 502 | 503 | 505 | - |
| | | Lo PR | 125 | 127 | 130 | - | 133 | 135 | 138 | - | 140 | 141 | 144 | - | 145 | 147 | 150 | - | 151 | 152 | 155 | - | 157 | 159 | 162 | - |
| | 4500 | MBh | 144.9 | 146.9 | 151.1 | - | 143.7 | 145.7 | 149.9 | - | 140.0 | 142.0 | 146.2 | - | 133.7 | 135.7 | 139.9 | - | 126.0 | 128.0 | 132.2 | - | 119.0 | 120.9 | 125.1 | - |
| | | S/T | 0.65 | 0.57 | 0.43 | - | 0.65 | 0.57 | 0.43 | - | 0.68 | 0.60 | 0.45 | - | 0.70 | 0.61 | 0.46 | - | 0.73 | 0.64 | 0.48 | - | 0.82 | 0.73 | 0.56 | - |
| | | ΔT | 18.90 | 16.91 | 13.19 | - | 18.85 | 16.85 | 13.13 | - | 19.13 | 17.13 | 13.41 | - | 18.83 | 16.83 | 13.11 | - | 18.56 | 16.57 | 12.84 | - | 19.81 | 17.81 | 14.09 | - |
| | | kW | 8.34 | 8.34 | 8.32 | - | 9.35 | 9.34 | 9.32 | - | 10.47 | 10.46 | 10.44 | - | 11.68 | 11.67 | 11.65 | - | 13.03 | 13.03 | 13.01 | - | 14.62 | 14.61 | 14.60 | - |
| | | Amps | 31.78 | 31.74 | 31.66 | - | 36.37 | 36.33 | 36.25 | - | 41.50 | 41.46 | 41.38 | - | 47.04 | 47.01 | 46.93 | - | 53.24 | 53.21 | 53.13 | - | 60.52 | 60.48 | 60.40 | - |
| | | Hi PR | 269 | 270 | 272 | - | 310 | 311 | 313 | - | 354 | 355 | 357 | - | 401 | 402 | 404 | - | 451 | 452 | 454 | - | 505 | 506 | 508 | - |
| | | Lo PR | 129 | 130 | 133 | - | 136 | 138 | 141 | - | 143 | 144 | 147 | - | 146 | 150 | 153 | - | 154 | 155 | 158 | - | 161 | 162 | 165 | - |
| 75 | 3500 | MBh | 141.1 | 143.1 | 147.3 | 153.7 | 139.9 | 141.8 | 146.0 | 152.4 | 136.2 | 138.2 | 142.4 | 148.8 | 129.9 | 131.9 | 136.1 | 142.5 | 122.2 | 124.2 | 128.4 | 134.8 | 115.1 | 117.1 | 121.3 | 127.7 |
| | | S/T | 0.69 | 0.63 | 0.52 | 0.40 | 0.70 | 0.64 | 0.52 | 0.40 | 0.73 | 0.66 | 0.54 | 0.42 | 0.75 | 0.68 | 0.56 | 0.43 | 0.79 | 0.72 | 0.58 | 0.44 | 0.88 | 0.80 | 0.66 | 0.51 |
| | | ΔT | 25.47 | 23.47 | 19.75 | 15.9 | 25.41 | 23.42 | 19.70 | 15.8 | 25.69 | 23.70 | 19.98 | 16.1 | 25.39 | 23.40 | 19.68 | 15.8 | 25.13 | 23.13 | 19.41 | 15.6 | 26.37 | 24.38 | 20.66 | 16.8 |
| | | kW | 8.24 | 8.23 | 8.22 | 8.3 | 9.25 | 9.24 | 9.22 | 9.3 | 10.37 | 10.36 | 10.34 | 10.4 | 11.58 | 11.57 | 11.55 | 11.6 | 12.93 | 12.93 | 12.91 | 13.0 | 14.52 | 14.51 | 14.50 | 14.6 |
| | | Amps | 31.32 | 31.28 | 31.20 | 31.6 | 35.91 | 35.87 | 35.79 | 36.1 | 41.04 | 41.00 | 40.92 | 41.3 | 46.58 | 46.55 | 46.47 | 46.8 | 52.78 | 52.75 | 52.67 | 53.0 | 60.06 | 60.02 | 59.94 | 60.3 |
| | | Hi PR | 264 | 265 | 267 | 271.9 | 306 | 307 | 309 | 313.5 | 349 | 351 | 352 | 357.0 | 396 | 397 | 399 | 403.8 | 447 | 448 | 450 | 454.4 | 501 | 502 | 504 | 508.3 |
| | | Lo PR | 124 | 126 | 129 | 134.3 | 132 | 133 | 137 | 141.8 | 138 | 140 | 143 | 148.4 | 139 | 146 | 149 | 153.9 | 149 | 151 | 154 | 159.4 | 156 | 158 | 161 | 165.0 |
| | 3800 | MBh | 142.3 | 144.3 | 148.5 | 154.9 | 141.1 | 143.1 | 147.2 | 153.7 | 137.4 | 139.4 | 143.6 | 150.0 | 131.1 | 133.1 | 137.3 | 143.7 | 123.4 | 125.4 | 129.6 | 136.0 | 116.3 | 118.3 | 122.5 | 128.9 |
| | | S/T | 0.73 | 0.66 | 0.54 | 0.41 | 0.73 | 0.66 | 0.54 | 0.41 | 0.76 | 0.69 | 0.56 | 0.43 | 0.79 | 0.71 | 0.58 | 0.44 | 0.83 | 0.75 | 0.60 | 0.46 | 0.92 | 0.84 | 0.68 | 0.52 |
| | | ΔT | 24.74 | 22.74 | 19.02 | 15.2 | 24.68 | 22.69 | 18.96 | 15.1 | 24.96 | 22.97 | 19.24 | 15.4 | 24.66 | 22.67 | 18.94 | 15.1 | 24.39 | 22.40 | 18.68 | 14.8 | 25.64 | 23.65 | 19.93 | 16.1 |
| | | kW | 8.27 | 8.27 | 8.25 | 8.3 | 9.28 | 9.27 | 9.25 | 9.3 | 10.40 | 10.39 | 10.37 | 10.4 | 11.61 | 11.60 | 11.59 | 11.7 | 12.96 | 12.96 | 12.94 | 13.0 | 14.55 | 14.55 | 14.53 | 14.6 |
| | | Amps | 31.46 | 31.43 | 31.35 | 31.7 | 36.05 | 36.02 | 35.94 | 36.3 | 41.18 | 41.14 | 41.07 | 41.4 | 46.73 | 46.69 | 46.61 | 47.0 | 52.93 | 52.89 | 52.81 | 53.2 | 60.20 | 60.16 | 60.09 | 60.4 |
| | | Hi PR | 266 | 267 | 269 | 273.3 | 307 | 308 | 310 | 314.8 | 351 | 352 | 354 | 358.4 | 398 | 399 | 401 | 405.2 | 448 | 449 | 451 | 455.8 | 502 | 503 | 505 | 509.7 |
| | | Lo PR | 125 | 127 | 130 | 135.4 | 133 | 135 | 138 | 143.0 | 140 | 141 | 144 | 149.5 | 139 | 147 | 150 | 155.1 | 151 | 150 | 155 | 160.6 | 157 | 159 | 162 | 167.4 |
| | 4500 | MBh | 145.7 | 147.7 | 151.9 | 158.3 | 144.5 | 146.5 | 150.7 | 157.1 | 140.8 | 142.8 | 147.0 | 153.4 | 134.5 | 136.5 | 140.7 | 147.1 | 126.8 | 128.8 | 133.0 | 139.4 | 119.8 | 121.7 | 125.9 | 132.3 |
| | | S/T | 0.79 | 0.71 | 0.57 | 0.43 | 0.80 | 0.72 | 0.58 | 0.43 | 0.83 | 0.75 | 0.60 | 0.45 | 0.85 | 0.77 | 0.62 | 0.46 | 0.90 | 0.81 | 0.64 | 0.47 | 1.00 | 0.90 | 0.73 | 0.55 |
| | | ΔT | 23.28 | 21.29 | 17.57 | 13.7 | 23.23 | 21.24 | 17.51 | 13.7 | 23.51 | 21.52 | 17.79 | 13.9 | 23.21 | 21.22 | 17.49 | 13.6 | 22.94 | 20.95 | 17.23 | 13.4 | 24.19 | 22.20 | 18.48 | 14.6 |
| | | kW | 8.34 | 8.33 | 8.31 | 8.4 | 9.34 | 9.33 | 9.32 | 9.4 | 10.46 | 10.45 | 10.44 | 10.5 | 11.67 | 11.66 | 11.65 | 11.7 | 13.03 | 13.02 | 13.00 | 13.1 | 14.62 | 14.61 | 14.59 | 14.7 |
| | | Amps | 31.75 | 31.71 | 31.63 | 32.0 | 36.34 | 36.30 | 36.22 | 36.6 | 41.47 | 41.43 | 41.35 | 41.7 | 47.01 | 46.98 | 46.90 | 47.3 | 53.21 | 53.18 | 53.10 | 53.4 | 60.49 | 60.45 | 60.37 | 60.7 |
| | | Hi PR | 269 | 270 | 272 | 276.5 | 310 | 312 | 313 | 318.1 | 354 | 355 | 357 | 361.6 | 401 | 402 | 404 | 408.4 | 451 | 453 | 454 | 459.0 | 505 | 506 | 508 | 512.9 |
| | | Lo PR | 129 | 130 | 133 | 138.5 | 136 | 138 | 141 | 146.0 | 139 | 144 | 147 | 152.6 | 139 | 150 | 153 | 158.2 | 154 | 154 | 158 | 163.6 | 140 | 162 | 165 | 170.5 |

IDB: Entering Indoor Dry Bulb Temperature

Shaded area reflects ACCA (TVA) conditions

kW = Total system power

High and low pressures are measured at the liquid and suction access fittings.

Amps: Unit amps (comp.+ evaporator + condenser fan motors)

Design Subcooling, 16 - 19 °F @ the liquid access fitting connection ARI 95 test conditions. Design Superheat 8 - 12°F @ the compressor suction access fitting connection.

| | | | Outdoor Ambient Temperature | | | | | | | | | | | | | | | | | | | | | | | |
|---|---|---|---|---|---|---|---|---|---|---|---|---|---|---|---|---|---|---|---|---|---|---|---|---|---|---|
| | | | 65 | | | | 75 | | | | 85 | | | | 95 | | | | 105 | | | | 115 | | | |
| | | | Entering Indoor Wet Bulb Temperature | | | | | | | | | | | | | | | | | | | | | | | |
| IDB | Airflow | ID WB | 59 | 63 | 67 | 71 | 59 | 63 | 67 | 71 | 59 | 63 | 67 | 71 | 59 | 63 | 67 | 71 | 59 | 63 | 67 | 71 | 59 | 63 | 67 | 71 |
| 80 | 3500 | MBh | 141.8 | 143.8 | 148.0 | 154.4 | 140.6 | 142.6 | 146.8 | 153.2 | 136.9 | 138.9 | 143.1 | 149.5 | 130.6 | 132.6 | 136.8 | 143.2 | 122.9 | 124.9 | 129.1 | 135.5 | 115.9 | 117.9 | 122.1 | 128.5 |
| | | S/T | 0.81 | 0.75 | 0.63 | 0.51 | 0.82 | 0.75 | 0.63 | 0.51 | 0.85 | 0.78 | 0.66 | 0.53 | 0.88 | 0.81 | 0.68 | 0.54 | 0.93 | 0.85 | 0.71 | 0.57 | 1.00 | 0.94 | 0.79 | 0.64 |
| | | ΔT | 29.88 | 27.89 | 24.16 | 20.3 | 29.83 | 27.83 | 24.11 | 20.3 | 30.11 | 28.11 | 24.39 | 20.5 | 29.81 | 27.81 | 24.09 | 20.2 | 29.54 | 27.55 | 23.82 | 20.0 | 30.10 | 28.79 | 25.07 | 21.2 |
| | | kW | 8.25 | 8.24 | 8.22 | 8.3 | 9.25 | 9.24 | 9.23 | 9.3 | 10.37 | 10.36 | 10.35 | 10.4 | 11.58 | 11.58 | 11.56 | 11.6 | 12.94 | 12.93 | 12.91 | 13.0 | 14.53 | 14.52 | 14.50 | 14.6 |
| | | Amps | 31.34 | 31.30 | 31.23 | 31.6 | 35.93 | 35.90 | 35.82 | 36.2 | 41.06 | 41.02 | 40.95 | 41.3 | 46.61 | 46.57 | 46.49 | 46.8 | 52.81 | 52.77 | 52.69 | 53.0 | 60.08 | 60.04 | 59.96 | 60.3 |
| | | Hi PR | 265 | 266 | 268 | 272.4 | 306 | 307 | 309 | 313.9 | 350 | 351 | 353 | 357.5 | 397 | 398 | 400 | 404.3 | 447 | 448 | 450 | 454.8 | 501 | 502 | 504 | 508.8 |
| | | Lo PR | 125 | 126 | 130 | 134.8 | 127 | 134 | 137 | 142.3 | 127 | 141 | 144 | 148.9 | 145 | 146 | 149 | 154.5 | 150 | 149 | 155 | 160.0 | 157 | 158 | 162 | 166.8 |
| | 3800 | MBh | 143.1 | 145.0 | 149.2 | 155.6 | 141.8 | 143.8 | 148.0 | 154.4 | 138.1 | 140.1 | 144.3 | 150.7 | 131.8 | 133.8 | 138.0 | 144.4 | 124.1 | 126.1 | 130.3 | 136.7 | 117.1 | 119.1 | 123.3 | 129.7 |
| | | S/T | 0.85 | 0.78 | 0.66 | 0.53 | 0.86 | 0.79 | 0.66 | 0.53 | 0.89 | 0.82 | 0.69 | 0.55 | 0.92 | 0.85 | 0.71 | 0.56 | 0.97 | 0.89 | 0.74 | 0.59 | 1.00 | 0.99 | 0.83 | 0.66 |
| | | ΔT | 29.15 | 27.15 | 23.43 | 19.6 | 29.09 | 27.10 | 23.38 | 19.5 | 29.37 | 27.38 | 23.66 | 19.8 | 29.07 | 27.08 | 23.36 | 19.5 | 28.81 | 26.81 | 23.09 | 19.2 | 28.01 | 28.06 | 24.34 | 20.5 |
| | | kW | 8.28 | 8.27 | 8.25 | 8.3 | 9.28 | 9.28 | 9.26 | 9.3 | 10.40 | 10.40 | 10.38 | 10.5 | 11.62 | 11.61 | 11.59 | 11.7 | 12.97 | 12.96 | 12.94 | 13.0 | 14.56 | 14.55 | 14.53 | 14.6 |
| | | Amps | 31.49 | 31.45 | 31.37 | 31.7 | 36.08 | 36.04 | 35.96 | 36.3 | 41.20 | 41.17 | 41.09 | 41.4 | 46.75 | 46.72 | 46.64 | 47.0 | 52.95 | 52.92 | 52.84 | 53.2 | 60.22 | 60.19 | 60.11 | 60.5 |
| | | Hi PR | 266 | 267 | 269 | 273.8 | 308 | 309 | 311 | 315.3 | 351 | 352 | 354 | 358.9 | 398 | 399 | 401 | 405.7 | 449 | 450 | 452 | 456.2 | 503 | 504 | 506 | 510.2 |
| | | Lo PR | 126 | 128 | 131 | 136.0 | 127 | 135 | 138 | 143.5 | 140 | 142 | 145 | 150.1 | 146 | 147 | 150 | 155.7 | 128 | 151 | 156 | 161.1 | 158 | 148 | 163 | 168.0 |
| | 4500 | MBh | 146.5 | 148.5 | 152.6 | 159.1 | 145.2 | 147.2 | 151.4 | 157.8 | 141.5 | 143.5 | 147.7 | 154.1 | 135.2 | 137.2 | 141.4 | 147.8 | 127.5 | 129.5 | 133.7 | 140.1 | 120.5 | 122.5 | 126.7 | 133.1 |
| | | S/T | 0.94 | 0.86 | 0.71 | 0.56 | 0.94 | 0.86 | 0.72 | 0.57 | 0.98 | 0.89 | 0.74 | 0.59 | 1.00 | 0.92 | 0.77 | 0.60 | 1.00 | 0.97 | 0.80 | 0.63 | 1.00 | 1.00 | 0.89 | 0.71 |
| | | ΔT | 27.70 | 25.70 | 21.98 | 18.1 | 27.64 | 25.65 | 21.93 | 18.1 | 27.92 | 25.93 | 22.21 | 18.4 | 27.32 | 25.63 | 21.91 | 18.1 | 25.76 | 25.36 | 21.64 | 17.8 | 24.34 | 24.74 | 22.89 | 19.0 |
| | | kW | 8.34 | 8.33 | 8.32 | 8.4 | 9.35 | 9.34 | 9.32 | 9.4 | 10.47 | 10.46 | 10.44 | 10.5 | 11.68 | 11.67 | 11.65 | 11.7 | 13.03 | 13.02 | 13.01 | 13.1 | 14.62 | 14.61 | 14.60 | 14.7 |
| | | Amps | 31.77 | 31.73 | 31.66 | 32.0 | 36.36 | 36.33 | 36.25 | 36.6 | 41.49 | 41.45 | 41.38 | 41.7 | 47.04 | 47.00 | 46.92 | 47.3 | 53.24 | 53.20 | 53.12 | 53.5 | 60.51 | 60.47 | 60.40 | 60.7 |
| | | Hi PR | 269 | 271 | 272 | 277.0 | 311 | 312 | 314 | 318.5 | 354 | 356 | 357 | 362.1 | 401 | 402 | 404 | 408.9 | 452 | 453 | 455 | 459.4 | 506 | 507 | 509 | 513.4 |
| | | Lo PR | 128 | 131 | 134 | 139.0 | 128 | 138 | 141 | 146.6 | 128 | 145 | 148 | 153.1 | 149 | 150 | 153 | 158.7 | 154 | 152 | 159 | 164.2 | 158 | 157 | 162 | 171.0 |
| 85 | 3500 | MBh | 144.2 | 146.2 | 150.4 | 156.8 | 143.0 | 144.9 | 149.1 | 155.5 | 139.3 | 141.3 | 145.5 | 151.9 | 133.0 | 135.0 | 139.2 | 145.6 | 125.3 | 127.3 | 131.5 | 137.9 | 118.2 | 120.2 | 124.4 | 130.8 |
| | | S/T | 0.90 | 0.84 | 0.72 | 0.59 | 0.91 | 0.84 | 0.72 | 0.60 | 0.94 | 0.87 | 0.75 | 0.62 | 0.98 | 0.90 | 0.77 | 0.64 | 1.00 | 0.95 | 0.81 | 0.67 | 1.00 | 1.00 | 0.90 | 0.74 |
| | | ΔT | 33.79 | 31.80 | 28.08 | 24.2 | 33.74 | 31.75 | 28.02 | 24.2 | 34.02 | 32.03 | 28.30 | 24.4 | 33.72 | 31.73 | 28.00 | 24.1 | 32.54 | 31.46 | 27.74 | 23.9 | 30.71 | 31.23 | 28.99 | 25.1 |
| | | kW | 8.27 | 8.26 | 8.24 | 8.3 | 9.27 | 9.26 | 9.25 | 9.3 | 10.39 | 10.38 | 10.37 | 10.4 | 11.60 | 11.60 | 11.58 | 11.7 | 12.96 | 12.95 | 12.93 | 13.0 | 14.55 | 14.54 | 14.52 | 14.6 |
| | | Amps | 31.43 | 31.39 | 31.31 | 31.7 | 36.02 | 35.99 | 35.91 | 36.3 | 41.15 | 41.11 | 41.03 | 41.4 | 46.70 | 46.66 | 46.58 | 46.9 | 52.89 | 52.86 | 52.78 | 53.1 | 60.17 | 60.13 | 60.05 | 60.4 |
| | | Hi PR | 266 | 267 | 269 | 273.6 | 308 | 309 | 311 | 315.2 | 351 | 352 | 354 | 358.7 | 398 | 399 | 401 | 405.6 | 448 | 450 | 451 | 456.1 | 502 | 504 | 505 | 510.0 |
| | | Lo PR | 127 | 128 | 131 | 136.7 | 134 | 136 | 139 | 144.2 | 141 | 141 | 146 | 150.8 | 115 | 141 | 151 | 156.3 | 149 | 142 | 157 | 161.8 | 154 | 160 | 163 | 168.7 |
| | 3800 | MBh | 145.4 | 147.4 | 151.6 | 158.0 | 144.2 | 146.1 | 150.3 | 156.7 | 140.5 | 142.5 | 146.7 | 153.1 | 134.2 | 136.2 | 140.4 | 146.8 | 126.5 | 128.5 | 132.7 | 139.1 | 119.4 | 121.4 | 125.6 | 132.0 |
| | | S/T | 0.95 | 0.88 | 0.75 | 0.62 | 0.96 | 0.89 | 0.76 | 0.62 | 0.99 | 0.92 | 0.79 | 0.65 | 1.00 | 0.95 | 0.81 | 0.67 | 1.00 | 1.00 | 0.85 | 0.70 | 1.00 | 1.00 | 0.94 | 0.77 |
| | | ΔT | 33.06 | 31.07 | 27.35 | 23.5 | 33.01 | 31.01 | 27.29 | 23.4 | 33.29 | 31.29 | 27.57 | 23.7 | 32.10 | 30.99 | 27.27 | 23.4 | 30.26 | 30.73 | 27.00 | 23.1 | 28.57 | 29.05 | 28.25 | 24.4 |
| | | kW | 8.30 | 8.29 | 8.27 | 8.4 | 9.30 | 9.29 | 9.28 | 9.4 | 10.42 | 10.41 | 10.40 | 10.5 | 11.63 | 11.63 | 11.61 | 11.7 | 12.99 | 12.98 | 12.96 | 13.0 | 14.58 | 14.57 | 14.55 | 14.6 |
| | | Amps | 31.57 | 31.54 | 31.46 | 31.8 | 36.17 | 36.13 | 36.05 | 36.4 | 41.29 | 41.26 | 41.18 | 41.5 | 46.84 | 46.80 | 46.73 | 47.1 | 53.04 | 53.00 | 52.92 | 53.3 | 60.31 | 60.28 | 60.20 | 60.5 |
| | | Hi PR | 267 | 269 | 270 | 275.0 | 309 | 310 | 312 | 316.6 | 353 | 354 | 355 | 360.1 | 399 | 401 | 402 | 407.0 | 450 | 451 | 453 | 457.5 | 504 | 505 | 507 | 511.4 |
| | | Lo PR | 128 | 129 | 133 | 137.8 | 115 | 137 | 140 | 145.4 | 115 | 142 | 147 | 151.9 | 148 | 141 | 152 | 157.5 | 153 | 142 | 158 | 163.0 | 160 | 159 | 161 | 169.8 |
| | 4500 | MBh | 148.8 | 150.8 | 155.0 | 161.4 | 147.6 | 149.6 | 153.8 | 160.2 | 143.9 | 145.9 | 150.1 | 156.5 | 137.6 | 139.6 | 143.8 | 150.2 | 129.9 | 131.9 | 136.1 | 142.5 | 122.9 | 124.8 | 129.0 | 135.4 |
| | | S/T | 1.00 | 0.97 | 0.83 | 0.68 | 1.00 | 0.98 | 0.83 | 0.68 | 1.00 | 1.00 | 0.86 | 0.70 | 1.00 | 1.00 | 0.89 | 0.72 | 1.00 | 1.00 | 0.93 | 0.75 | 1.00 | 1.00 | 1.00 | 0.84 |
| | | ΔT | 30.07 | 29.62 | 25.90 | 22.0 | 29.81 | 29.56 | 25.84 | 22.0 | 29.07 | 29.47 | 26.12 | 22.3 | 27.80 | 28.20 | 25.82 | 22.0 | 26.24 | 26.64 | 25.55 | 21.7 | 24.82 | 25.22 | 26.07 | 22.9 |
| | | kW | 8.36 | 8.35 | 8.34 | 8.4 | 9.36 | 9.36 | 9.34 | 9.4 | 10.48 | 10.48 | 10.46 | 10.5 | 11.70 | 11.69 | 11.67 | 11.7 | 13.05 | 13.04 | 13.03 | 13.1 | 14.64 | 14.63 | 14.62 | 14.7 |
| | | Amps | 31.86 | 31.82 | 31.74 | 32.1 | 36.45 | 36.42 | 36.34 | 36.7 | 41.58 | 41.54 | 41.46 | 41.8 | 47.13 | 47.09 | 47.01 | 47.4 | 53.33 | 53.29 | 53.21 | 53.6 | 60.60 | 60.56 | 60.48 | 60.8 |
| | | Hi PR | 271 | 272 | 274 | 278.2 | 312 | 313 | 315 | 319.8 | 356 | 357 | 359 | 363.3 | 403 | 404 | 406 | 410.2 | 453 | 454 | 456 | 460.7 | 507 | 508 | 510 | 514.6 |
| | | Lo PR | 131 | 131 | 136 | 140.9 | 138 | 139 | 143 | 148.4 | 145 | 147 | 150 | 155.0 | 151 | 152 | 155 | 160.6 | 156 | 158 | 161 | 166.0 | 163 | 164 | 168 | 172.9 |

IDB: Entering Indoor Dry Bulb Temperature

Shaded area reflects ACCA (TVA) conditions

kW = Total system power

High and low pressures are measured at the liquid and suction access fittings.

Amps: Unit amps (comp.+ evaporator + condenser fan motors)

Design Subcooling, 16 - 19 °F @ the liquid access fitting connection ARI 95 test conditions. Design Superheat 8 - 12°F @ the compressor suction access fitting connection.

**Heating Rating Table - Natural Gas and Propane[1]**

| Unit | Rated High Input (MBH) | Gas Heat | Input/Output (MBH) | Temp Rise High (ºF) | Temp Rise Low (ºF) | Thermal Efficiency (T.E.) | Recommended Minimum Airflow (SCFM) | Recommended Maximum Airflow (SCFM) |
|---|---|---|---|---|---|---|---|---|
| DHG090 | 130 | High | 130/105.3 | 25 - 55 | | 81% | 1765 | 3882 |
| | | Low | 97.5/79 | | 25-55 | | 1323 | 2912 |
| | 180 | High | 180/145.8 | 25 - 55 | | 81% | 2443 | 5375 |
| | | Low | 135/109.35 | | 25-55 | | 1832 | 4031 |
| | 225 | High | 225/182.25 | 40 - 70 | | 81% | 2400 | 4199 |
| | | Low | 168.75/136.69 | | 40 - 70 | | 1800 | 3149 |
| DHG102 | 130 | High | 130/105.3 | 25 - 55 | | 81% | 1765 | 3882 |
| | | Low | 97.5/79 | | 25-55 | | 1323 | 2912 |
| | 180 | High | 180/145.8 | 25 - 55 | | 81% | 2443 | 5375 |
| | | Low | 135/109.35 | | 25-55 | | 1832 | 4031 |
| | 225 | High | 225/182.25 | 40 - 70 | | 81% | 2400 | 4199 |
| | | Low | 168.75/136.69 | | 40 - 70 | | 1800 | 3149 |
| DHG120 | 130 | High | 130/105.3 | 25 - 55 | | 81% | 1765 | 3882 |
| | | Low | 97.5/79 | | 25-55 | | 1323 | 2912 |
| | 180 | High | 180/145.8 | 25 - 55 | | 81% | 2443 | 5375 |
| | | Low | 135/109.35 | | 25-55 | | 1832 | 4031 |
| | 240 | High | 240/194.4 | 30 - 60 | | 81% | 2986 | 5972 |
| | | Low | 180/145.8 | | 30 - 60 | | 2240 | 4479 |
| DHG150 | 130 | High | 130/105.3 | 25 - 55 | | 81% | 1765 | 3882 |
| | | Low | 97.5/79 | | 25-55 | | 1323 | 2912 |
| | 180 | High | 180/145.8 | 25 - 55 | | 81% | 2443 | 5375 |
| | | Low | 135/109.35 | | 25-55 | | 1832 | 4031 |
| | 240 | High | 240/194.4 | 35 - 65 | | 81% | 2756 | 5119 |
| | | Low | 180/145.8 | | 35 - 65 | | 2067 | 3839 |

[1]LP High Fire Rate is Reduced 10% that of Natural Gas

**Heat Exchanger and Burner Orifice Specifications**

| Unit | Maxium Input (Btuh) | Number of Burners | NG Orifice | LP Orifice |
|---|---|---|---|---|
| DHG090 | 130,000 | 5 | 41 | 54 |
| | 180,000 | 6 | 37 | 53 |
| | 225,000 | 7 | 36 | 52 |
| DHG102 | 130,000 | 5 | 41 | 54 |
| | 180,000 | 6 | 37 | 53 |
| | 225,000 | 7 | 36 | 52 |
| DHG120 | 130,000 | 5 | 41 | 54 |
| | 180,000 | 6 | 37 | 53 |
| | 240,000 | 7 | 34 | 51 |
| DHG150 | 130,000 | 5 | 41 | 54 |
| | 180,000 | 6 | 37 | 53 |
| | 240,000 | 7 | 34 | 51 |

**7.5 Ton • 130 MBH Gas Heat Exchanger • Standard Static Direct Drive**
**Models: DHG0903DL, DHG0904DL, DHG0907DL**

| Down Flow | | | | |
|---|---|---|---|---|
| **Speed Tap** | **ESP** | **CFM** | **RPM** | **BHP** |
| **T1**** | 0.2 | 1882 | 544 | 0.38 |
| | 0.4 | - | - | - |
| | 0.6 | - | - | - |
| | 0.8 | - | - | - |
| **T2**** | 0.2 | 2589 | 629 | 0.67 |
| | 0.4 | 2410 | 681 | 0.73 |
| | 0.6 | 2216 | 734 | 0.79 |
| | 0.8 | 2038 | 782 | 0.84 |
| **T3** | 0.2 | 3144 | 708 | 1.01 |
| | 0.4 | 2961 | 753 | 1.08 |
| | 0.6 | 2802 | 799 | 1.14 |
| | 0.8 | 2651 | 841 | 1.20 |
| **T4** | 0.2 | 3413 | 753 | 1.23 |
| | 0.4 | 3222 | 794 | 1.29 |
| | 0.6 | 3070 | 836 | 1.36 |
| | 0.8 | 2940 | 875 | 1.43 |
| **T5** | 0.2 | 3622 | 793 | 1.43 |
| | 0.4 | 3422 | 830 | 1.50 |
| | 0.6 | 3268 | 868 | 1.57 |
| | 0.8 | 3160 | 904 | 1.64 |
| **T6**** | 0.2 | 1901 | 546 | 0.38 |
| | 0.4 | 1713 | 605 | 0.42 |
| | 0.6 | 1453 | 667 | 0.47 |
| | 0.8 | - | - | - |
| **T7**** | 0.2 | 2107 | 569 | 0.46 |
| | 0.4 | 1922 | 627 | 0.50 |
| | 0.6 | 1684 | 686 | 0.55 |
| | 0.8 | 1495 | 738 | 0.59 |
| **T8** | 0.2 | 2301 | 592 | 0.54 |
| | 0.4 | 2119 | 648 | 0.59 |
| | 0.6 | 1900 | 704 | 0.64 |
| | 0.8 | - | - | - |
| **T9** | 0.2 | 2920 | 674 | 0.86 |
| | 0.4 | 2740 | 722 | 0.92 |
| | 0.6 | 2569 | 771 | 0.98 |
| | 0.8 | 2405 | 816 | 1.04 |
| **T10** | 0.2 | 3427 | 756 | 1.24 |
| | 0.4 | 3236 | 797 | 1.31 |
| | 0.6 | 3084 | 838 | 1.38 |
| | 0.8 | 2955 | 877 | 1.44 |

| Horizontal Flow | | | | |
|---|---|---|---|---|
| **Speed Tap** | **ESP** | **CFM** | **RPM** | **BHP** |
| **T1**** | 0.2 | 2029 | 488 | 0.34 |
| | 0.4 | - | - | - |
| | 0.6 | - | - | - |
| | 0.8 | - | - | - |
| **T2**** | 0.2 | 2748 | 571 | 0.61 |
| | 0.4 | 2554 | 627 | 0.67 |
| | 0.6 | 2337 | 697 | 0.75 |
| | 0.8 | 2148 | 750 | 0.80 |
| **T3** | 0.2 | 3289 | 649 | 0.93 |
| | 0.4 | 3133 | 690 | 0.99 |
| | 0.6 | 2972 | 745 | 1.06 |
| | 0.8 | 2802 | 792 | 1.13 |
| **T4** | 0.2 | 3539 | 693 | 1.13 |
| | 0.4 | 3419 | 726 | 1.18 |
| | 0.6 | 3282 | 773 | 1.26 |
| | 0.8 | 3132 | 816 | 1.33 |
| **T5** | 0.2 | 3724 | 732 | 1.32 |
| | 0.4 | 3647 | 757 | 1.37 |
| | 0.6 | 3525 | 797 | 1.44 |
| | 0.8 | 3401 | 836 | 1.51 |
| **T6**** | 0.2 | 2048 | 490 | 0.34 |
| | 0.4 | 1853 | 561 | 0.39 |
| | 0.6 | 1559 | 646 | 0.45 |
| | 0.8 | 1374 | 707 | 0.49 |
| **T7**** | 0.2 | 2260 | 513 | 0.41 |
| | 0.4 | 2061 | 580 | 0.47 |
| | 0.6 | 1791 | 660 | 0.53 |
| | 0.8 | 1602 | 719 | 0.58 |
| **T8** | 0.2 | 2458 | 535 | 0.49 |
| | 0.4 | 2259 | 598 | 0.54 |
| | 0.6 | 2011 | 674 | 0.61 |
| | 0.8 | 1820 | 731 | 0.66 |
| **T9** | 0.2 | 3074 | 616 | 0.79 |
| | 0.4 | 2897 | 663 | 0.85 |
| | 0.6 | 2715 | 724 | 0.92 |
| | 0.8 | 2534 | 774 | 0.99 |
| **T10** | 0.2 | 3552 | 696 | 1.14 |
| | 0.4 | 3435 | 728 | 1.20 |
| | 0.6 | 3299 | 774 | 1.27 |
| | 0.8 | 3151 | 817 | 1.34 |

shaded speed tap - Gas heating airflow.
**(T1) (T2) and (T6)(T7) are part load only.

**7.5 Ton • 130 MBH Gas Heat Exchanger • Medium Static Direct Drive**
**Models: DHG0903LL, DHG0904LL, DHG0907LL**

| Down Flow | | | | |
|---|---|---|---|---|
| Speed Tap | ESP | CFM | RPM | BHP |
| T1** | 0.2 | 1882 | 544 | 0.38 |
| | 0.4 | - | - | - |
| | 0.6 | - | - | - |
| | 0.8 | - | - | - |
| | 1.0 | - | - | - |
| | 1.2 | - | - | - |
| | 1.4 | - | - | - |
| T2** | 0.2 | 3059 | 695 | 0.95 |
| | 0.4 | 2877 | 741 | 1.01 |
| | 0.6 | 2714 | 788 | 1.08 |
| | 0.8 | 2558 | 831 | 1.14 |
| | 1.0 | 2412 | 870 | 1.19 |
| | 1.2 | 2218 | 922 | 1.26 |
| | 1.4 | 2028 | 965 | 1.32 |
| T3 | 0.2 | 3144 | 708 | 1.01 |
| | 0.4 | 2961 | 753 | 1.08 |
| | 0.6 | 2802 | 799 | 1.14 |
| | 0.8 | 2651 | 841 | 1.20 |
| | 1.0 | 2493 | 880 | 1.26 |
| | 1.2 | 2307 | 930 | 1.33 |
| | 1.4 | - | - | - |
| T4 | 0.2 | - | - | - |
| | 0.4 | 3622 | 874 | 1.77 |
| | 0.6 | 3458 | 907 | 1.83 |
| | 0.8 | 3380 | 940 | 1.90 |
| | 1.0 | 3265 | 975 | 1.97 |
| | 1.2 | 3138 | 1008 | 2.04 |
| | 1.4 | 2994 | 1043 | 2.11 |
| T5 | 0.2 | - | - | - |
| | 0.4 | 3725 | 901 | 1.94 |
| | 0.6 | 3549 | 931 | 2.00 |
| | 0.8 | 3492 | 961 | 2.07 |
| | 1.0 | 3423 | 996 | 2.15 |
| | 1.2 | 3307 | 1026 | 2.21 |
| | 1.4 | 3180 | 1059 | 2.28 |
| T6** | 0.2 | 2139 | 573 | 0.47 |
| | 0.4 | 1955 | 630 | 0.52 |
| | 0.6 | 1720 | 689 | 0.57 |
| | 0.8 | 1531 | 741 | 0.61 |
| | 1.0 | 1623 | 782 | 0.64 |
| | 1.2 | 1351 | 849 | 0.70 |
| | 1.4 | - | - | - |
| T7** | 0.2 | 2691 | 642 | 0.73 |
| | 0.4 | 2512 | 693 | 0.78 |
| | 0.6 | 2325 | 745 | 0.84 |
| | 0.8 | 2152 | 792 | 0.90 |
| | 1.0 | 2079 | 832 | 0.94 |
| | 1.2 | 1854 | 890 | 1.01 |
| | 1.4 | 1662 | 937 | 1.06 |
| T8 | 0.2 | 3162 | 711 | 1.02 |
| | 0.4 | 2979 | 756 | 1.09 |
| | 0.6 | 2820 | 801 | 1.15 |
| | 0.8 | 2671 | 843 | 1.22 |
| | 1.0 | 2511 | 882 | 1.27 |
| | 1.2 | 2326 | 931 | 1.34 |
| | 1.4 | 2139 | 974 | 1.40 |
| T9 | 0.2 | 3681 | 805 | 1.50 |
| | 0.4 | 3477 | 842 | 1.57 |
| | 0.6 | 3322 | 878 | 1.64 |
| | 0.8 | 3220 | 913 | 1.70 |
| | 1.0 | 3066 | 950 | 1.77 |
| | 1.2 | 2925 | 987 | 1.84 |
| | 1.4 | 2765 | 1024 | 1.91 |
| T10 | 0.2 | - | - | - |
| | 0.4 | 3811 | 927 | 2.12 |
| | 0.6 | 3620 | 954 | 2.18 |
| | 0.8 | 3586 | 983 | 2.25 |
| | 1.0 | 3578 | 1017 | 2.32 |
| | 1.2 | 3471 | 1043 | 2.38 |
| | 1.4 | 3363 | 1074 | 2.45 |

| Horizontal Flow | | | | |
|---|---|---|---|---|
| Speed Tap | ESP | CFM | RPM | BHP |
| T1** | 0.2 | 2029 | 488 | 0.34 |
| | 0.4 | - | - | - |
| | 0.6 | - | - | - |
| | 0.8 | - | - | - |
| | 1.0 | - | - | - |
| | 1.2 | - | - | - |
| | 1.4 | - | - | - |
| T2** | 0.2 | 3208 | 636 | 0.87 |
| | 0.4 | 3043 | 680 | 0.93 |
| | 0.6 | 2874 | 737 | 1.01 |
| | 0.8 | 2699 | 785 | 1.07 |
| | 1.0 | 2519 | 829 | 1.13 |
| | 1.2 | 2312 | 884 | 1.21 |
| | 1.4 | 2103 | 948 | 1.30 |
| T3 | 0.2 | 3289 | 649 | 0.93 |
| | 0.4 | 3133 | 690 | 0.99 |
| | 0.6 | 2972 | 745 | 1.06 |
| | 0.8 | 2802 | 792 | 1.13 |
| | 1.0 | 2632 | 836 | 1.19 |
| | 1.2 | 2436 | 889 | 1.27 |
| | 1.4 | - | - | - |
| T4 | 0.2 | - | - | - |
| | 0.4 | - | - | - |
| | 0.6 | - | - | - |
| | 0.8 | 3693 | 861 | 1.74 |
| | 1.0 | 3575 | 905 | 1.83 |
| | 1.2 | 3461 | 941 | 1.90 |
| | 1.4 | 3345 | 991 | 2.00 |
| T5 | 0.2 | - | - | - |
| | 0.4 | - | - | - |
| | 0.6 | - | - | - |
| | 0.8 | - | - | - |
| | 1.0 | 3737 | 920 | 1.98 |
| | 1.2 | 3633 | 952 | 2.05 |
| | 1.4 | 3524 | 999 | 2.15 |
| T6** | 0.2 | 2293 | 516 | 0.42 |
| | 0.4 | 2093 | 583 | 0.48 |
| | 0.6 | 1827 | 663 | 0.54 |
| | 0.8 | 1637 | 721 | 0.59 |
| | 1.0 | - | - | - |
| | 1.2 | - | - | - |
| | 1.4 | - | - | - |
| T7** | 0.2 | 2849 | 584 | 0.66 |
| | 0.4 | 2659 | 638 | 0.72 |
| | 0.6 | 2453 | 705 | 0.80 |
| | 0.8 | 2265 | 757 | 0.86 |
| | 1.0 | 2034 | 801 | 0.91 |
| | 1.2 | 1777 | 864 | 0.98 |
| | 1.4 | 1511 | 932 | 1.05 |
| T8 | 0.2 | 3307 | 652 | 0.94 |
| | 0.4 | 3152 | 692 | 1.00 |
| | 0.6 | 2993 | 747 | 1.08 |
| | 0.8 | 2824 | 794 | 1.14 |
| | 1.0 | 2657 | 837 | 1.21 |
| | 1.2 | 2463 | 891 | 1.28 |
| | 1.4 | 2269 | 952 | 1.37 |
| T9 | 0.2 | 3774 | 744 | 1.39 |
| | 0.4 | 3713 | 767 | 1.43 |
| | 0.6 | 3594 | 804 | 1.50 |
| | 0.8 | 3478 | 843 | 1.57 |
| | 1.0 | 3356 | 886 | 1.65 |
| | 1.2 | 3226 | 927 | 1.73 |
| | 1.4 | 3096 | 980 | 1.83 |
| T10 | 0.2 | - | - | - |
| | 0.4 | - | - | - |
| | 0.6 | - | - | - |
| | 0.8 | - | - | - |
| | 1.0 | 3881 | 936 | 2.14 |
| | 1.2 | 3786 | 964 | 2.20 |
| | 1.4 | 3680 | 1008 | 2.30 |

shaded speed tap - Gas heating airflow.
**(T1) (T2) and (T6)(T7) are part load only.

**7.5 Ton • 130 MBH Gas Heat Exchanger • High Static Direct Drive**
**Models: DHG0903WL, DHG0904WL, DHG0907WL**

| Down Flow | | | | |
|---|---|---|---|---|
| Speed Tap | ESP | CFM | RPM | BHP |
| T1** | 0.2 | 1882 | 544 | 0.38 |
| | 0.4 | - | - | - |
| | 0.6 | - | - | - |
| | 0.8 | - | - | - |
| | 1.0 | - | - | - |
| | 1.2 | - | - | - |
| | 1.4 | - | - | - |
| | 1.6 | - | - | - |
| | 1.8 | - | - | - |
| | 2.0 | - | - | - |
| T2** | 0.2 | 3527 | 774 | 1.34 |
| | 0.4 | 3332 | 814 | 1.40 |
| | 0.6 | 3180 | 853 | 1.47 |
| | 0.8 | 3061 | 891 | 1.54 |
| | 1.0 | 2889 | 927 | 1.60 |
| | 1.2 | 2735 | 969 | 1.67 |
| | 1.4 | 2563 | 1008 | 1.74 |
| | 1.6 | 2392 | 1050 | 1.81 |
| | 1.8 | 2237 | 1086 | 1.87 |
| | 2.0 | 2077 | 1119 | 1.93 |
| T3 | 0.2 | 3144 | 708 | 1.01 |
| | 0.4 | 2961 | 753 | 1.08 |
| | 0.6 | 2802 | 799 | 1.14 |
| | 0.8 | 2651 | 841 | 1.20 |
| | 1.0 | 2493 | 880 | 1.26 |
| | 1.2 | 2307 | 930 | 1.33 |
| | 1.4 | - | - | - |
| | 1.6 | - | - | - |
| | 1.8 | - | - | - |
| | 2.0 | - | - | - |
| T4 | 0.2 | - | - | - |
| | 0.4 | - | - | - |
| | 0.6 | - | - | - |
| | 0.8 | - | - | - |
| | 1.0 | 3620 | 1023 | 2.37 |
| | 1.2 | 3514 | 1048 | 2.43 |
| | 1.4 | 3412 | 1078 | 2.50 |
| | 1.6 | 3263 | 1117 | 2.59 |
| | 1.8 | 3081 | 1148 | 2.66 |
| | 2.0 | 2915 | 1184 | 2.75 |
| T5 | 0.2 | - | - | - |
| | 0.4 | - | - | - |
| | 0.6 | - | - | - |
| | 0.8 | - | - | - |
| | 1.0 | - | - | - |
| | 1.2 | 3728 | 1071 | 2.68 |
| | 1.4 | 3656 | 1100 | 2.75 |
| | 1.6 | 3519 | 1137 | 2.84 |
| | 1.8 | 3325 | 1166 | 2.91 |
| | 2.0 | 3161 | 1203 | 3.01 |
| T6** | 0.2 | 2457 | 612 | 0.61 |
| | 0.4 | 2277 | 665 | 0.66 |
| | 0.6 | 2072 | 720 | 0.72 |
| | 0.8 | 1891 | 769 | 0.77 |
| | 1.0 | 1881 | 810 | 0.81 |
| | 1.2 | 1636 | 872 | 0.87 |
| | 1.4 | 1447 | 921 | 0.92 |
| | 1.6 | - | - | - |
| | 1.8 | - | - | - |
| | 2.0 | - | - | - |

| Horizontal Flow | | | | |
|---|---|---|---|---|
| Speed Tap | ESP | CFM | RPM | BHP |
| T1** | 0.2 | 2029 | 488 | 0.34 |
| | 0.4 | - | - | - |
| | 0.6 | - | - | - |
| | 0.8 | - | - | - |
| | 1.0 | - | - | - |
| | 1.2 | - | - | - |
| | 1.4 | - | - | - |
| | 1.6 | - | - | - |
| | 1.8 | - | - | - |
| | 2.0 | - | - | - |
| T2** | 0.2 | 3642 | 714 | 1.23 |
| | 0.4 | 3544 | 743 | 1.28 |
| | 0.6 | 3415 | 786 | 1.36 |
| | 0.8 | 3278 | 827 | 1.43 |
| | 1.0 | 3147 | 870 | 1.50 |
| | 1.2 | 2998 | 915 | 1.58 |
| | 1.4 | 2852 | 971 | 1.68 |
| | 1.6 | 2666 | 1010 | 1.74 |
| | 1.8 | 2482 | 1060 | 1.83 |
| | 2.0 | 2323 | 1096 | 1.89 |
| T3 | 0.2 | 3289 | 649 | 0.93 |
| | 0.4 | 3133 | 690 | 0.99 |
| | 0.6 | 2972 | 745 | 1.06 |
| | 0.8 | 2802 | 792 | 1.13 |
| | 1.0 | 2632 | 836 | 1.19 |
| | 1.2 | 2436 | 889 | 1.27 |
| | 1.4 | - | - | - |
| | 1.6 | - | - | - |
| | 1.8 | - | - | - |
| | 2.0 | - | - | - |
| T4 | 0.2 | - | - | - |
| | 0.4 | - | - | - |
| | 0.6 | - | - | - |
| | 0.8 | - | - | - |
| | 1.0 | - | - | - |
| | 1.2 | - | - | - |
| | 1.4 | 3718 | 1010 | 2.34 |
| | 1.6 | 3610 | 1040 | 2.41 |
| | 1.8 | 3473 | 1094 | 2.54 |
| | 2.0 | 3351 | 1130 | 2.62 |
| T5 | 0.2 | - | - | - |
| | 0.4 | - | - | - |
| | 0.6 | - | - | - |
| | 0.8 | - | - | - |
| | 1.0 | - | - | - |
| | 1.2 | - | - | - |
| | 1.4 | - | - | - |
| | 1.6 | 3825 | 1049 | 2.62 |
| | 1.8 | 3707 | 1104 | 2.76 |
| | 2.0 | 3599 | 1140 | 2.85 |
| T6** | 0.2 | 2616 | 554 | 0.55 |
| | 0.4 | 2418 | 613 | 0.61 |
| | 0.6 | 2188 | 686 | 0.68 |
| | 0.8 | 1997 | 741 | 0.74 |
| | 1.0 | 1729 | 785 | 0.78 |
| | 1.2 | 1439 | 852 | 0.85 |
| | 1.4 | - | - | - |
| | 1.6 | - | - | - |
| | 1.8 | - | - | - |
| | 2.0 | - | - | - |

shaded speed tap - Gas heating airflow.
**(T1) (T2) and (T6)(T7) are part load only.

**7.5 Ton • 130 MBH Gas Heat Exchanger • High Static Direct Drive**
**Models: DHG0903WL, DHG0904WL, DHG0907WL**

| Down Flow | | | | |
|---|---|---|---|---|
| Speed Tap | ESP | CFM | RPM | BHP |
| T7** | 0.2 | - | - | - |
| | 0.4 | 2838 | 735 | 0.99 |
| | 0.6 | 2672 | 783 | 1.05 |
| | 0.8 | 2514 | 827 | 1.11 |
| | 1.0 | 2374 | 866 | 1.16 |
| | 1.2 | 2177 | 918 | 1.23 |
| | 1.4 | 1986 | 962 | 1.29 |
| | 1.6 | 1815 | 1006 | 1.35 |
| | 1.8 | 1667 | 1046 | 1.40 |
| | 2.0 | 1522 | 1077 | 1.44 |
| T8 | 0.2 | 3482 | 766 | 1.29 |
| | 0.4 | 3289 | 806 | 1.36 |
| | 0.6 | 3137 | 846 | 1.43 |
| | 0.8 | 3014 | 884 | 1.49 |
| | 1.0 | 2840 | 921 | 1.55 |
| | 1.2 | 2682 | 964 | 1.63 |
| | 1.4 | 2507 | 1003 | 1.69 |
| | 1.6 | 2335 | 1045 | 1.76 |
| | 1.8 | 2182 | 1082 | 1.83 |
| | 2.0 | 2022 | 1115 | 1.88 |
| T9 | 0.2 | - | - | - |
| | 0.4 | 3783 | 918 | 2.06 |
| | 0.6 | 3598 | 946 | 2.12 |
| | 0.8 | 3556 | 976 | 2.19 |
| | 1.0 | 3525 | 1010 | 2.26 |
| | 1.2 | 3415 | 1037 | 2.32 |
| | 1.4 | 3300 | 1069 | 2.39 |
| | 1.6 | 3146 | 1108 | 2.48 |
| | 1.8 | 2969 | 1139 | 2.55 |
| | 2.0 | 2802 | 1175 | 2.63 |
| T10 | 0.2 | - | - | - |
| | 0.4 | - | - | - |
| | 0.6 | - | - | - |
| | 0.8 | - | - | - |
| | 1.0 | - | - | - |
| | 1.2 | 3653 | 1072 | 2.68 |
| | 1.4 | 3550 | 1101 | 2.75 |
| | 1.6 | 3452 | 1131 | 2.83 |
| | 1.8 | 3353 | 1163 | 2.91 |
| | 2.0 | 3247 | 1196 | 2.99 |

| Horizontal Flow | | | | |
|---|---|---|---|---|
| Speed Tap | ESP | CFM | RPM | BHP |
| T7** | 0.2 | - | - | - |
| | 0.4 | - | - | - |
| | 0.6 | 2828 | 733 | 0.98 |
| | 0.8 | 2651 | 782 | 1.05 |
| | 1.0 | 2466 | 825 | 1.11 |
| | 1.2 | 2253 | 882 | 1.18 |
| | 1.4 | 2038 | 946 | 1.27 |
| | 1.6 | 1869 | 991 | 1.33 |
| | 1.8 | 1668 | 1038 | 1.39 |
| | 2.0 | 1495 | 1074 | 1.44 |
| T8 | 0.2 | 3601 | 706 | 1.19 |
| | 0.4 | 3495 | 736 | 1.24 |
| | 0.6 | 3363 | 780 | 1.32 |
| | 0.8 | 3221 | 822 | 1.39 |
| | 1.0 | 3086 | 866 | 1.46 |
| | 1.2 | 2932 | 912 | 1.54 |
| | 1.4 | 2780 | 969 | 1.63 |
| | 1.6 | 2594 | 1008 | 1.70 |
| | 1.8 | 2408 | 1058 | 1.78 |
| | 2.0 | 2247 | 1094 | 1.85 |
| T9 | 0.2 | - | - | - |
| | 0.4 | - | - | - |
| | 0.6 | - | - | - |
| | 0.8 | - | - | - |
| | 1.0 | 3833 | 930 | 2.08 |
| | 1.2 | 3735 | 960 | 2.15 |
| | 1.4 | 3629 | 1005 | 2.25 |
| | 1.6 | 3503 | 1036 | 2.32 |
| | 1.8 | 3358 | 1089 | 2.44 |
| | 2.0 | 3229 | 1125 | 2.52 |
| T10 | 0.2 | - | - | - |
| | 0.4 | - | - | - |
| | 0.6 | - | - | - |
| | 0.8 | - | - | - |
| | 1.0 | 3659 | 998 | 2.50 |
| | 1.2 | 3638 | 1008 | 2.52 |
| | 1.4 | 3585 | 1022 | 2.56 |
| | 1.6 | 3500 | 1052 | 2.63 |
| | 1.8 | 3382 | 1091 | 2.73 |
| | 2.0 | 3286 | 1124 | 2.81 |

shaded speed tap - Gas heating airflow.
**(T1) (T2) and (T6)(T7) are part load only.

**7.5 Ton • 180 MBH Gas Heat Exchanger • Standard Static Direct Drive**
**Models: DHG0903DM, DHG0904DM, DHG0907DM**

| Down Flow | | | | |
|---|---|---|---|---|
| Speed Tap | ESP | CFM | RPM | BHP |
| T1** | 0.2 | 1954 | 552 | 0.40 |
| | 0.4 | - | - | - |
| | 0.6 | - | - | - |
| | 0.8 | - | - | - |
| T2** | 0.2 | 2589 | 629 | 0.67 |
| | 0.4 | 2410 | 681 | 0.73 |
| | 0.6 | 2216 | 734 | 0.79 |
| | 0.8 | 2038 | 782 | 0.84 |
| T3 | 0.2 | 3017 | 730 | 1.06 |
| | 0.4 | 2897 | 773 | 1.13 |
| | 0.6 | 2760 | 818 | 1.19 |
| | 0.8 | 2633 | 859 | 1.25 |
| T4 | 0.2 | 3251 | 774 | 1.26 |
| | 0.4 | 3095 | 813 | 1.33 |
| | 0.6 | 2954 | 853 | 1.39 |
| | 0.8 | 2827 | 893 | 1.46 |
| T5 | 0.2 | 3417 | 815 | 1.47 |
| | 0.4 | 3274 | 846 | 1.53 |
| | 0.6 | 3126 | 887 | 1.60 |
| | 0.8 | 2988 | 923 | 1.66 |
| T6** | 0.2 | 1416 | 213 | 0.21 |
| | 0.4 | - | - | - |
| | 0.6 | - | - | - |
| | 0.8 | - | - | - |
| T7** | 0.2 | 1975 | 554 | 0.41 |
| | 0.4 | - | - | - |
| | 0.6 | - | - | - |
| | 0.8 | - | - | - |
| T8 | 0.2 | 2156 | 579 | 0.54 |
| | 0.4 | 1956 | 637 | 0.59 |
| | 0.6 | - | - | - |
| | 0.8 | - | - | - |
| T9 | 0.2 | 2936 | 677 | 0.87 |
| | 0.4 | 2756 | 724 | 0.93 |
| | 0.6 | 2586 | 773 | 0.99 |
| | 0.8 | - | - | - |
| T10 | 0.2 | 3427 | 756 | 1.24 |
| | 0.4 | 3236 | 797 | 1.31 |
| | 0.6 | 3084 | 838 | 1.38 |
| | 0.8 | 2955 | 877 | 1.44 |

| Horizontal Flow | | | | |
|---|---|---|---|---|
| Speed Tap | ESP | CFM | RPM | BHP |
| T1** | 0.2 | 2030 | 500 | 0.36 |
| | 0.4 | - | - | - |
| | 0.6 | - | - | - |
| | 0.8 | - | - | - |
| T2** | 0.2 | 2675 | 594 | 0.64 |
| | 0.4 | 2487 | 642 | 0.69 |
| | 0.6 | 2336 | 698 | 0.75 |
| | 0.8 | 2089 | 777 | 0.83 |
| T3 | 0.2 | 3161 | 679 | 0.99 |
| | 0.4 | 3068 | 713 | 1.04 |
| | 0.6 | 2899 | 768 | 1.12 |
| | 0.8 | 2776 | 809 | 1.18 |
| T4 | 0.2 | 3413 | 704 | 1.15 |
| | 0.4 | 3244 | 742 | 1.21 |
| | 0.6 | 3108 | 785 | 1.28 |
| | 0.8 | 2963 | 823 | 1.34 |
| T5 | 0.2 | 3563 | 693 | 1.25 |
| | 0.4 | 3526 | 771 | 1.39 |
| | 0.6 | 3402 | 814 | 1.47 |
| | 0.8 | 3317 | 858 | 1.55 |
| T6** | 0.2 | 1604 | 448 | 0.25 |
| | 0.4 | - | - | - |
| | 0.6 | - | - | - |
| | 0.8 | - | - | - |
| T7** | 0.2 | 2056 | 505 | 0.37 |
| | 0.4 | 1832 | 582 | 0.43 |
| | 0.6 | - | - | - |
| | 0.8 | - | - | - |
| T8 | 0.2 | 2434 | 558 | 0.52 |
| | 0.4 | 2251 | 616 | 0.57 |
| | 0.6 | - | - | - |
| | 0.8 | - | - | - |
| T9 | 0.2 | 2975 | 642 | 0.83 |
| | 0.4 | 2799 | 680 | 0.88 |
| | 0.6 | 2585 | 734 | 0.94 |
| | 0.8 | - | - | - |
| T10 | 0.2 | 3413 | 704 | 1.15 |
| | 0.4 | 3244 | 742 | 1.21 |
| | 0.6 | 3108 | 785 | 1.28 |
| | 0.8 | 2963 | 823 | 1.34 |

shaded speed tap - Gas heating airflow.
**(T1) (T2) and (T6)(T7) are part load only.

**7.5 Ton • 180 MBH Gas Heat Exchanger • Medium Static Direct Drive**
**Models: DHG0903LM, DHG0904LM, DHG0907LM**

| Down Flow | | | | |
|---|---|---|---|---|
| **Speed Tap** | **ESP** | **CFM** | **RPM** | **BHP** |
| **T1**** | 0.2 | 1954 | 552 | 0.40 |
| | 0.4 | - | - | - |
| | 0.6 | - | - | - |
| | 0.8 | - | - | - |
| | 1.0 | - | - | - |
| | 1.2 | - | - | - |
| | 1.4 | - | - | - |
| **T2**** | 0.2 | 2908 | 718 | 0.98 |
| | 0.4 | 2754 | 759 | 1.04 |
| | 0.6 | 2608 | 806 | 1.10 |
| | 0.8 | 2473 | 845 | 1.16 |
| | 1.0 | 2322 | 892 | 1.22 |
| | 1.2 | 2105 | 945 | 1.29 |
| | 1.4 | 1941 | 996 | 1.36 |
| **T3** | 0.2 | 3017 | 730 | 1.06 |
| | 0.4 | 2897 | 773 | 1.13 |
| | 0.6 | 2760 | 818 | 1.19 |
| | 0.8 | 2633 | 859 | 1.25 |
| | 1.0 | 2499 | 900 | 1.31 |
| | 1.2 | 2280 | 957 | 1.40 |
| | 1.4 | - | - | - |
| **T4** | 0.2 | 3629 | 851 | 1.72 |
| | 0.4 | 3548 | 882 | 1.79 |
| | 0.6 | 3484 | 917 | 1.86 |
| | 0.8 | 3375 | 955 | 1.93 |
| | 1.0 | 3293 | 989 | 2.00 |
| | 1.2 | 3185 | 1020 | 2.06 |
| | 1.4 | 3102 | 1056 | 2.14 |
| **T5** | 0.2 | 3765 | 876 | 1.89 |
| | 0.4 | 3676 | 902 | 1.94 |
| | 0.6 | 3614 | 937 | 2.02 |
| | 0.8 | 3386 | 980 | 2.11 |
| | 1.0 | 3274 | 1020 | 2.19 |
| | 1.2 | 3153 | 1049 | 2.25 |
| | 1.4 | 3035 | 1078 | 2.32 |
| **T6**** | 0.2 | 2730 | 647 | 0.75 |
| | 0.4 | 2551 | 698 | 0.81 |
| | 0.6 | 2367 | 749 | 0.87 |
| | 0.8 | 2195 | 796 | 0.92 |
| | 1.0 | 2113 | 836 | 0.97 |
| | 1.2 | 1891 | 894 | 1.03 |
| | 1.4 | - | - | - |
| **T7**** | 0.2 | 3108 | 758 | 1.17 |
| | 0.4 | 3019 | 797 | 1.23 |
| | 0.6 | 2932 | 835 | 1.29 |
| | 0.8 | 2818 | 876 | 1.36 |
| | 1.0 | 2696 | 916 | 1.42 |
| | 1.2 | 2538 | 949 | 1.47 |
| | 1.4 | 2378 | 995 | 1.54 |
| **T8** | 0.2 | 3541 | 835 | 1.62 |
| | 0.4 | 3458 | 868 | 1.68 |
| | 0.6 | 3391 | 903 | 1.75 |
| | 0.8 | 3282 | 941 | 1.82 |
| | 1.0 | 3195 | 976 | 1.89 |
| | 1.2 | 3078 | 1007 | 1.95 |
| | 1.4 | 2985 | 1044 | 2.02 |
| **T9** | 0.2 | 3712 | 865 | 1.83 |
| | 0.4 | 3634 | 896 | 1.89 |
| | 0.6 | 3571 | 930 | 1.96 |
| | 0.8 | 3463 | 968 | 2.04 |
| | 1.0 | 3384 | 1002 | 2.12 |
| | 1.2 | 3284 | 1033 | 2.18 |
| | 1.4 | 3210 | 1067 | 2.25 |
| **T10** | 0.2 | 3869 | 893 | 2.04 |
| | 0.4 | 3795 | 921 | 2.11 |
| | 0.6 | 3736 | 956 | 2.18 |
| | 0.8 | 3628 | 994 | 2.27 |
| | 1.0 | 3552 | 1029 | 2.35 |
| | 1.2 | 3468 | 1058 | 2.42 |
| | 1.4 | 3405 | 1089 | 2.49 |

| Horizontal Flow | | | | |
|---|---|---|---|---|
| **Speed Tap** | **ESP** | **CFM** | **RPM** | **BHP** |
| **T1**** | 0.2 | 2030 | 500 | 0.36 |
| | 0.4 | - | - | - |
| | 0.6 | - | - | - |
| | 0.8 | - | - | - |
| | 1.0 | - | - | - |
| | 1.2 | - | - | - |
| | 1.4 | - | - | - |
| **T2**** | 0.2 | 3067 | 653 | 0.89 |
| | 0.4 | 2922 | 693 | 0.95 |
| | 0.6 | 2711 | 750 | 1.03 |
| | 0.8 | 2551 | 794 | 1.09 |
| | 1.0 | 2396 | 837 | 1.15 |
| | 1.2 | 2121 | 908 | 1.24 |
| | 1.4 | 1872 | 971 | 1.33 |
| **T3** | 0.2 | 3161 | 679 | 0.99 |
| | 0.4 | 3068 | 713 | 1.04 |
| | 0.6 | 2899 | 768 | 1.12 |
| | 0.8 | 2776 | 809 | 1.18 |
| | 1.0 | 2647 | 851 | 1.24 |
| | 1.2 | 2405 | 922 | 1.35 |
| | 1.4 | - | - | - |
| **T4** | 0.2 | - | - | - |
| | 0.4 | 3730 | 803 | 1.62 |
| | 0.6 | 3644 | 845 | 1.71 |
| | 0.8 | 3566 | 881 | 1.78 |
| | 1.0 | 3473 | 921 | 1.86 |
| | 1.2 | 3374 | 946 | 1.91 |
| | 1.4 | 3289 | 996 | 2.02 |
| **T5** | 0.2 | - | - | - |
| | 0.4 | - | - | - |
| | 0.6 | 3776 | 862 | 1.86 |
| | 0.8 | 3699 | 898 | 1.94 |
| | 1.0 | 3616 | 938 | 2.02 |
| | 1.2 | 3502 | 964 | 2.08 |
| | 1.4 | 3440 | 1011 | 2.18 |
| **T6**** | 0.2 | 2782 | 575 | 0.63 |
| | 0.4 | 2589 | 631 | 0.69 |
| | 0.6 | 2376 | 699 | 0.76 |
| | 0.8 | 2187 | 753 | 0.82 |
| | 1.0 | 1946 | 796 | 0.87 |
| | 1.2 | - | - | - |
| | 1.4 | - | - | - |
| **T7**** | 0.2 | 3284 | 678 | 1.05 |
| | 0.4 | 3187 | 726 | 1.12 |
| | 0.6 | 3081 | 772 | 1.19 |
| | 0.8 | 2988 | 814 | 1.26 |
| | 1.0 | 2876 | 857 | 1.32 |
| | 1.2 | 2770 | 907 | 1.40 |
| | 1.4 | 2660 | 936 | 1.45 |
| **T8** | 0.2 | 3730 | 746 | 1.44 |
| | 0.4 | 3640 | 790 | 1.53 |
| | 0.6 | 3549 | 833 | 1.61 |
| | 0.8 | 3470 | 869 | 1.68 |
| | 1.0 | 3372 | 909 | 1.76 |
| | 1.2 | 3288 | 935 | 1.81 |
| | 1.4 | 3183 | 986 | 1.91 |
| **T9** | 0.2 | 3902 | 774 | 1.63 |
| | 0.4 | 3813 | 815 | 1.72 |
| | 0.6 | 3732 | 857 | 1.81 |
| | 0.8 | 3655 | 893 | 1.88 |
| | 1.0 | 3569 | 932 | 1.97 |
| | 1.2 | 3458 | 958 | 2.02 |
| | 1.4 | 3391 | 1006 | 2.12 |
| **T10** | 0.2 | 4056 | 799 | 1.83 |
| | 0.4 | 3968 | 839 | 1.92 |
| | 0.6 | 3899 | 879 | 2.01 |
| | 0.8 | 3821 | 915 | 2.09 |
| | 1.0 | 3751 | 955 | 2.18 |
| | 1.2 | 3643 | 984 | 2.25 |
| | 1.4 | 3582 | 1025 | 2.34 |

shaded speed tap - Gas heating airflow.
**(T1) (T2) and (T6)(T7) are part load only.

**7.5 Ton • 180 MBH Gas Heat Exchanger • High Static Direct Drive**
**Models: DHG0903WM, DHG0904WM, DHG0907WM**

| Down Flow | | | | |
|---|---|---|---|---|
| Speed Tap | ESP | CFM | RPM | BHP |
| T1** | 0.2 | 1954 | 552 | 0.40 |
| | 0.4 | - | - | - |
| | 0.6 | - | - | - |
| | 0.8 | - | - | - |
| | 1.0 | - | - | - |
| | 1.2 | - | - | - |
| | 1.4 | - | - | - |
| | 1.6 | - | - | - |
| | 1.8 | - | - | - |
| | 2.0 | - | - | - |
| T2** | 0.2 | 3316 | 796 | 1.37 |
| | 0.4 | 3230 | 831 | 1.43 |
| | 0.6 | 3153 | 868 | 1.50 |
| | 0.8 | 3042 | 907 | 1.57 |
| | 1.0 | 2939 | 943 | 1.63 |
| | 1.2 | 2800 | 976 | 1.68 |
| | 1.4 | 2676 | 1017 | 1.76 |
| | 1.6 | 2500 | 1044 | 1.80 |
| | 1.8 | 2336 | 1113 | 1.92 |
| | 2.0 | 2209 | 1162 | 2.01 |
| T3 | 0.2 | 3017 | 730 | 1.06 |
| | 0.4 | 2897 | 773 | 1.13 |
| | 0.6 | 2760 | 818 | 1.19 |
| | 0.8 | 2633 | 859 | 1.25 |
| | 1.0 | 2499 | 900 | 1.31 |
| | 1.2 | 2280 | 957 | 1.40 |
| | 1.4 | - | - | - |
| | 1.6 | - | - | - |
| | 1.8 | - | - | - |
| | 2.0 | - | - | - |
| T4 | 0.2 | - | - | - |
| | 0.4 | - | - | - |
| | 0.6 | 3767 | 961 | 2.23 |
| | 0.8 | 3660 | 1000 | 2.32 |
| | 1.0 | 3496 | 1042 | 2.42 |
| | 1.2 | 3398 | 1073 | 2.49 |
| | 1.4 | 3293 | 1099 | 2.55 |
| | 1.6 | 3065 | 1137 | 2.64 |
| | 1.8 | 2958 | 1163 | 2.70 |
| | 2.0 | 2810 | 1208 | 2.80 |
| T5 | 0.2 | - | - | - |
| | 0.4 | - | - | - |
| | 0.6 | - | - | - |
| | 0.8 | - | - | - |
| | 1.0 | 3728 | 1062 | 2.66 |
| | 1.2 | 3662 | 1090 | 2.73 |
| | 1.4 | 3602 | 1116 | 2.79 |
| | 1.6 | 3523 | 1145 | 2.86 |
| | 1.8 | 3416 | 1188 | 2.97 |
| | 2.0 | 3317 | 1217 | 3.04 |
| T6** | 0.2 | 2792 | 701 | 0.91 |
| | 0.4 | 2699 | 745 | 0.97 |
| | 0.6 | 2597 | 786 | 1.02 |
| | 0.8 | 2478 | 831 | 1.08 |
| | 1.0 | 2319 | 878 | 1.14 |
| | 1.2 | 2112 | 912 | 1.18 |
| | 1.4 | 1921 | 957 | 1.24 |
| | 1.6 | - | - | - |
| | 1.8 | - | - | - |
| | 2.0 | - | - | - |

| Horizontal Flow | | | | |
|---|---|---|---|---|
| Speed Tap | ESP | CFM | RPM | BHP |
| T1** | 0.2 | 2030 | 500 | 0.36 |
| | 0.4 | - | - | - |
| | 0.6 | - | - | - |
| | 0.8 | - | - | - |
| | 1.0 | - | - | - |
| | 1.2 | - | - | - |
| | 1.4 | - | - | - |
| | 1.6 | - | - | - |
| | 1.8 | - | - | - |
| | 2.0 | - | - | - |
| T2** | 0.2 | 3316 | 796 | 1.23 |
| | 0.4 | 3544 | 743 | 1.28 |
| | 0.6 | 3415 | 786 | 1.36 |
| | 0.8 | 3278 | 827 | 1.43 |
| | 1.0 | 3147 | 870 | 1.50 |
| | 1.2 | 2998 | 915 | 1.58 |
| | 1.4 | 2852 | 971 | 1.68 |
| | 1.6 | 2666 | 1010 | 1.74 |
| | 1.8 | 2482 | 1060 | 1.83 |
| | 2.0 | 2323 | 1096 | 1.89 |
| T3 | 0.2 | 3161 | 679 | 0.99 |
| | 0.4 | 3068 | 713 | 1.04 |
| | 0.6 | 2899 | 768 | 1.12 |
| | 0.8 | 2776 | 809 | 1.18 |
| | 1.0 | 2647 | 851 | 1.24 |
| | 1.2 | 2405 | 922 | 1.35 |
| | 1.4 | - | - | - |
| | 1.6 | - | - | - |
| | 1.8 | - | - | - |
| | 2.0 | - | - | - |
| T4 | 0.2 | - | - | - |
| | 0.4 | - | - | - |
| | 0.6 | - | - | - |
| | 0.8 | - | - | - |
| | 1.0 | 3786 | 959 | 2.23 |
| | 1.2 | 3674 | 995 | 2.31 |
| | 1.4 | 3566 | 1035 | 2.40 |
| | 1.6 | 3459 | 1067 | 2.48 |
| | 1.8 | 3361 | 1097 | 2.55 |
| | 2.0 | 3261 | 1134 | 2.63 |
| T5 | 0.2 | - | - | - |
| | 0.4 | - | - | - |
| | 0.6 | - | - | - |
| | 0.8 | - | - | - |
| | 1.0 | - | - | - |
| | 1.2 | - | - | - |
| | 1.4 | 3795 | 1047 | 2.62 |
| | 1.6 | 3706 | 1077 | 2.69 |
| | 1.8 | 3641 | 1114 | 2.79 |
| | 2.0 | 3565 | 1145 | 2.86 |
| T6** | 0.2 | 2957 | 628 | 0.82 |
| | 0.4 | 2854 | 681 | 0.89 |
| | 0.6 | 2743 | 730 | 0.95 |
| | 0.8 | 2634 | 776 | 1.01 |
| | 1.0 | 2523 | 823 | 1.07 |
| | 1.2 | 2193 | 915 | 1.19 |
| | 1.4 | 1969 | 950 | 1.23 |
| | 1.6 | - | - | - |
| | 1.8 | - | - | - |
| | 2.0 | - | - | - |

shaded speed tap - Gas heating airflow.
**(T1) (T2) and (T6)(T7) are part load only.

**7.5 Ton • 180 MBH Gas Heat Exchanger • High Static Direct Drive**
**Models: DHG0903WM, DHG0904WM, DHG0907WM**

| Down Flow | | | | |
|---|---|---|---|---|
| Speed Tap | ESP | CFM | RPM | BHP |
| T7** | 0.2 | 3464 | 822 | 1.53 |
| | 0.4 | 3380 | 855 | 1.59 |
| | 0.6 | 3309 | 891 | 1.66 |
| | 0.8 | 3200 | 929 | 1.73 |
| | 1.0 | 3108 | 964 | 1.80 |
| | 1.2 | 2984 | 996 | 1.85 |
| | 1.4 | 2881 | 1035 | 1.93 |
| | 1.6 | 2717 | 1062 | 1.98 |
| | 1.8 | 2550 | 1130 | 2.10 |
| | 2.0 | 2357 | 1171 | 2.18 |
| T8 | 0.2 | 3983 | 912 | 2.21 |
| | 0.4 | 3912 | 940 | 2.28 |
| | 0.6 | 3855 | 974 | 2.36 |
| | 0.8 | 3748 | 1014 | 2.46 |
| | 1.0 | 3671 | 1051 | 2.55 |
| | 1.2 | 3598 | 1079 | 2.62 |
| | 1.4 | 3538 | 1107 | 2.68 |
| | 1.6 | 3446 | 1136 | 2.75 |
| | 1.8 | 3326 | 1183 | 2.87 |
| | 2.0 | 3210 | 1213 | 2.94 |
| T9 | 0.2 | 4119 | 935 | 2.44 |
| | 0.4 | 4054 | 962 | 2.51 |
| | 0.6 | 3998 | 997 | 2.60 |
| | 0.8 | 3890 | 1039 | 2.71 |
| | 1.0 | 3806 | 1079 | 2.82 |
| | 1.2 | 3747 | 1106 | 2.89 |
| | 1.4 | 3686 | 1130 | 2.95 |
| | 1.6 | 3625 | 1160 | 3.03 |
| | 1.8 | 3541 | 1195 | 3.12 |
| | 2.0 | 3456 | 1222 | 3.19 |
| T10 | 0.2 | - | - | - |
| | 0.4 | - | - | - |
| | 0.6 | - | - | - |
| | 0.8 | - | - | - |
| | 1.0 | 4156 | 1104 | 3.08 |
| | 1.2 | 4032 | 1128 | 3.14 |
| | 1.4 | 3908 | 1151 | 3.21 |
| | 1.6 | 3784 | 1175 | 3.27 |
| | 1.8 | 3660 | 1198 | 3.34 |
| | 2.0 | 3536 | 1222 | 3.40 |

| Horizontal Flow | | | | |
|---|---|---|---|---|
| Speed Tap | ESP | CFM | RPM | BHP |
| T7** | 0.2 | 3652 | 734 | 1.37 |
| | 0.4 | 3562 | 778 | 1.45 |
| | 0.6 | 3467 | 822 | 1.53 |
| | 0.8 | 3386 | 859 | 1.60 |
| | 1.0 | 3284 | 899 | 1.67 |
| | 1.2 | 3212 | 927 | 1.73 |
| | 1.4 | 3090 | 977 | 1.82 |
| | 1.6 | 2966 | 1013 | 1.89 |
| | 1.8 | 2649 | 1112 | 2.07 |
| | 2.0 | 2521 | 1147 | 2.14 |
| T8 | 0.2 | 4167 | 817 | 1.98 |
| | 0.4 | 4077 | 857 | 2.08 |
| | 0.6 | 4019 | 895 | 2.17 |
| | 0.8 | 3939 | 931 | 2.26 |
| | 1.0 | 3885 | 973 | 2.36 |
| | 1.2 | 3827 | 1008 | 2.44 |
| | 1.4 | 3723 | 1040 | 2.52 |
| | 1.6 | 3622 | 1070 | 2.59 |
| | 1.8 | 3569 | 1108 | 2.69 |
| | 2.0 | 3472 | 1139 | 2.76 |
| T9 | 0.2 | 4296 | 839 | 2.19 |
| | 0.4 | 4205 | 878 | 2.29 |
| | 0.6 | 4163 | 915 | 2.39 |
| | 0.8 | 4077 | 952 | 2.49 |
| | 1.0 | 4047 | 996 | 2.60 |
| | 1.2 | 3954 | 1041 | 2.72 |
| | 1.4 | 3894 | 1058 | 2.76 |
| | 1.6 | 3827 | 1088 | 2.84 |
| | 1.8 | 3735 | 1123 | 2.93 |
| | 2.0 | 3680 | 1154 | 3.01 |
| T10 | 0.2 | - | - | - |
| | 0.4 | - | - | - |
| | 0.6 | - | - | - |
| | 0.8 | - | - | - |
| | 1.0 | - | - | - |
| | 1.2 | - | - | - |
| | 1.4 | 4040 | 1074 | 2.99 |
| | 1.6 | 4023 | 1106 | 3.08 |
| | 1.8 | 3859 | 1138 | 3.17 |
| | 2.0 | 3812 | 1167 | 3.25 |

shaded speed tap - Gas heating airflow.
**(T1) (T2) and (T6)(T7) are part load only.

**7.5 Ton • 225 MBH Gas Heat Exchanger • Standard Static Direct Drive**
**Models: DHG0903DH, DHG0904DH, DHG0907DH**

| Down Flow | | | | |
|---|---|---|---|---|
| Speed Tap | ESP | CFM | RPM | BHP |
| T1** | 0.2 | 1954 | 552 | 0.40 |
| | 0.4 | - | - | - |
| | 0.6 | - | - | - |
| | 0.8 | - | - | - |
| T2** | 0.2 | 2589 | 629 | 0.67 |
| | 0.4 | 2410 | 681 | 0.73 |
| | 0.6 | 2216 | 734 | 0.79 |
| | 0.8 | 2038 | 782 | 0.84 |
| T3 | 0.2 | 3194 | 716 | 1.05 |
| | 0.4 | 3010 | 760 | 1.11 |
| | 0.6 | 2852 | 805 | 1.18 |
| | 0.8 | 2705 | 847 | 1.24 |
| T4 | 0.2 | 3413 | 753 | 1.23 |
| | 0.4 | 3222 | 794 | 1.29 |
| | 0.6 | 3070 | 836 | 1.36 |
| | 0.8 | 2940 | 875 | 1.43 |
| T5 | 0.2 | 3622 | 793 | 1.43 |
| | 0.4 | 3422 | 830 | 1.50 |
| | 0.6 | 3268 | 868 | 1.57 |
| | 0.8 | 3160 | 904 | 1.64 |
| T6** | 0.2 | 2098 | 568 | 0.45 |
| | 0.4 | 1913 | 626 | 0.50 |
| | 0.6 | - | - | - |
| | 0.8 | - | - | - |
| T7** | 0.2 | 2625 | 633 | 0.69 |
| | 0.4 | 2446 | 685 | 0.75 |
| | 0.6 | 2255 | 738 | 0.81 |
| | 0.8 | 2079 | 786 | 0.86 |
| T8 | 0.2 | 3081 | 698 | 0.97 |
| | 0.4 | 2900 | 744 | 1.03 |
| | 0.6 | 2737 | 791 | 1.09 |
| | 0.8 | 2582 | 834 | 1.15 |
| T9 | 0.2 | 3263 | 728 | 1.10 |
| | 0.4 | 3078 | 771 | 1.17 |
| | 0.6 | 2923 | 815 | 1.23 |
| | 0.8 | 2780 | 856 | 1.30 |
| T10 | 0.2 | 3427 | 756 | 1.24 |
| | 0.4 | 3236 | 797 | 1.31 |
| | 0.6 | 3084 | 838 | 1.38 |
| | 0.8 | 2955 | 877 | 1.44 |

| Horizontal Flow | | | | |
|---|---|---|---|---|
| Speed Tap | ESP | CFM | RPM | BHP |
| T1** | 0.2 | 2102 | 495 | 0.36 |
| | 0.4 | 1906 | 566 | 0.41 |
| | 0.6 | - | - | - |
| | 0.8 | - | - | - |
| T2** | 0.2 | 2748 | 571 | 0.61 |
| | 0.4 | 2554 | 627 | 0.67 |
| | 0.6 | 2337 | 697 | 0.75 |
| | 0.8 | 2148 | 750 | 0.80 |
| T3 | 0.2 | 3336 | 657 | 0.96 |
| | 0.4 | 3185 | 696 | 1.02 |
| | 0.6 | 3029 | 750 | 1.10 |
| | 0.8 | 2862 | 796 | 1.17 |
| T4 | 0.2 | 3539 | 693 | 1.13 |
| | 0.4 | 3419 | 726 | 1.18 |
| | 0.6 | 3282 | 773 | 1.26 |
| | 0.8 | 3132 | 816 | 1.33 |
| T5 | 0.2 | 3724 | 732 | 1.32 |
| | 0.4 | 3647 | 757 | 1.37 |
| | 0.6 | 3525 | 797 | 1.44 |
| | 0.8 | 3401 | 836 | 1.51 |
| T6** | 0.2 | 2251 | 512 | 0.41 |
| | 0.4 | 2052 | 579 | 0.46 |
| | 0.6 | - | - | - |
| | 0.8 | - | - | - |
| T7** | 0.2 | 2784 | 576 | 0.63 |
| | 0.4 | 2591 | 631 | 0.69 |
| | 0.6 | 2379 | 699 | 0.76 |
| | 0.8 | 2190 | 753 | 0.82 |
| T8 | 0.2 | 3230 | 639 | 0.88 |
| | 0.4 | 3066 | 682 | 0.94 |
| | 0.6 | 2900 | 739 | 1.02 |
| | 0.8 | 2726 | 787 | 1.09 |
| T9 | 0.2 | 3401 | 668 | 1.01 |
| | 0.4 | 3259 | 705 | 1.07 |
| | 0.6 | 3109 | 757 | 1.15 |
| | 0.8 | 2947 | 802 | 1.22 |
| T10 | 0.2 | 3552 | 696 | 1.14 |
| | 0.4 | 3435 | 728 | 1.20 |
| | 0.6 | 3299 | 774 | 1.27 |
| | 0.8 | 3151 | 817 | 1.34 |

shaded speed tap - Gas heating airflow.
**(T1) (T2) and (T6)(T7) are part load only.

**7.5 Ton • 225 MBH Gas Heat Exchanger • Medium Static Direct Drive**
**Models: DHG0903LH, DHG0904LH, DHG0907LH**

| Down Flow | | | | |
|---|---|---|---|---|
| Speed Tap | ESP | CFM | RPM | BHP |
| T1** | 0.2 | 1954 | 552 | 0.40 |
| | 0.4 | - | - | - |
| | 0.6 | - | - | - |
| | 0.8 | - | - | - |
| | 1.0 | - | - | - |
| | 1.2 | - | - | - |
| | 1.4 | - | - | - |
| T2** | 0.2 | 3059 | 695 | 0.95 |
| | 0.4 | 2877 | 741 | 1.01 |
| | 0.6 | 2714 | 788 | 1.08 |
| | 0.8 | 2558 | 831 | 1.14 |
| | 1.0 | 2412 | 870 | 1.19 |
| | 1.2 | 2218 | 922 | 1.26 |
| | 1.4 | 2028 | 965 | 1.32 |
| T3 | 0.2 | 3194 | 716 | 1.05 |
| | 0.4 | 3010 | 760 | 1.11 |
| | 0.6 | 2852 | 805 | 1.18 |
| | 0.8 | 2705 | 847 | 1.24 |
| | 1.0 | 2542 | 885 | 1.30 |
| | 1.2 | 2360 | 934 | 1.37 |
| | 1.4 | - | - | - |
| T4 | 0.2 | - | - | - |
| | 0.4 | 3622 | 874 | 1.77 |
| | 0.6 | 3458 | 907 | 1.83 |
| | 0.8 | 3380 | 940 | 1.90 |
| | 1.0 | 3265 | 975 | 1.97 |
| | 1.2 | 3138 | 1008 | 2.04 |
| | 1.4 | 2994 | 1043 | 2.11 |
| T5 | 0.2 | - | - | - |
| | 0.4 | 3725 | 901 | 1.94 |
| | 0.6 | 3549 | 931 | 2.00 |
| | 0.8 | 3492 | 961 | 2.07 |
| | 1.0 | 3423 | 996 | 2.15 |
| | 1.2 | 3307 | 1026 | 2.21 |
| | 1.4 | 3180 | 1059 | 2.28 |
| T6** | 0.2 | 2231 | 516 | 0.50 |
| | 0.4 | 2028 | 649 | 0.63 |
| | 0.6 | 1835 | 696 | 0.68 |
| | 0.8 | - | - | - |
| | 1.0 | - | - | - |
| | 1.2 | - | - | - |
| | 1.4 | - | - | - |
| T7** | 0.2 | 2987 | 684 | 0.90 |
| | 0.4 | 2806 | 731 | 0.96 |
| | 0.6 | 2639 | 779 | 1.03 |
| | 0.8 | 2479 | 823 | 1.09 |
| | 1.0 | 2344 | 862 | 1.14 |
| | 1.2 | 2144 | 915 | 1.21 |
| | 1.4 | 1953 | 959 | 1.27 |
| T8 | 0.2 | 3456 | 761 | 1.27 |
| | 0.4 | 3264 | 801 | 1.34 |
| | 0.6 | 3112 | 842 | 1.40 |
| | 0.8 | 2986 | 881 | 1.47 |
| | 1.0 | 2812 | 918 | 1.53 |
| | 1.2 | 2652 | 961 | 1.60 |
| | 1.4 | 2476 | 1001 | 1.67 |
| T9 | 0.2 | 3569 | 838 | 1.66 |
| | 0.4 | 3500 | 874 | 1.73 |
| | 0.6 | 3434 | 910 | 1.80 |
| | 0.8 | 3325 | 947 | 1.87 |
| | 1.0 | 3240 | 982 | 1.94 |
| | 1.2 | 3128 | 1013 | 2.00 |
| | 1.4 | 3040 | 1049 | 2.07 |
| T10 | 0.2 | 3893 | 882 | 1.99 |
| | 0.4 | 3766 | 916 | 2.07 |
| | 0.6 | 3687 | 945 | 2.14 |
| | 0.8 | 3584 | 977 | 2.21 |
| | 1.0 | 3501 | 1006 | 2.28 |
| | 1.2 | 3392 | 1042 | 2.36 |
| | 1.4 | 3289 | 1068 | 2.42 |

| Horizontal Flow | | | | |
|---|---|---|---|---|
| Speed Tap | ESP | CFM | RPM | BHP |
| T1** | 0.2 | 2102 | 495 | 0.36 |
| | 0.4 | 1906 | 566 | 0.41 |
| | 0.6 | - | - | - |
| | 0.8 | - | - | - |
| | 1.0 | - | - | - |
| | 1.2 | - | - | - |
| | 1.4 | - | - | - |
| T2** | 0.2 | 3208 | 636 | 0.87 |
| | 0.4 | 3043 | 680 | 0.93 |
| | 0.6 | 2874 | 737 | 1.01 |
| | 0.8 | 2699 | 785 | 1.07 |
| | 1.0 | 2519 | 829 | 1.13 |
| | 1.2 | 2312 | 884 | 1.21 |
| | 1.4 | 2103 | 948 | 1.30 |
| T3 | 0.2 | 3336 | 657 | 0.96 |
| | 0.4 | 3185 | 696 | 1.02 |
| | 0.6 | 3029 | 750 | 1.10 |
| | 0.8 | 2862 | 796 | 1.17 |
| | 1.0 | 2699 | 840 | 1.23 |
| | 1.2 | 2509 | 893 | 1.31 |
| | 1.4 | 2320 | 954 | 1.40 |
| T4 | 0.2 | - | - | - |
| | 0.4 | - | - | - |
| | 0.6 | - | - | - |
| | 0.8 | 3693 | 861 | 1.74 |
| | 1.0 | 3575 | 905 | 1.83 |
| | 1.2 | 3461 | 941 | 1.90 |
| | 1.4 | 3345 | 991 | 2.00 |
| T5 | 0.2 | - | - | - |
| | 0.4 | - | - | - |
| | 0.6 | - | - | - |
| | 0.8 | - | - | - |
| | 1.0 | 3737 | 920 | 1.98 |
| | 1.2 | 3633 | 952 | 2.05 |
| | 1.4 | 3524 | 999 | 2.15 |
| T6** | 0.2 | 2410 | 585 | 0.57 |
| | 0.4 | 2385 | 610 | 0.59 |
| | 0.6 | 2243 | 664 | 0.65 |
| | 0.8 | 1983 | 748 | 0.73 |
| | 1.0 | - | - | - |
| | 1.2 | - | - | - |
| | 1.4 | - | - | - |
| T7** | 0.2 | 3139 | 625 | 0.83 |
| | 0.4 | 2967 | 671 | 0.89 |
| | 0.6 | 2791 | 730 | 0.96 |
| | 0.8 | 2613 | 779 | 1.03 |
| | 1.0 | 2424 | 823 | 1.09 |
| | 1.2 | 2207 | 880 | 1.16 |
| | 1.4 | 1987 | 944 | 1.25 |
| T8 | 0.2 | 3578 | 701 | 1.17 |
| | 0.4 | 3467 | 732 | 1.22 |
| | 0.6 | 3333 | 778 | 1.30 |
| | 0.8 | 3188 | 820 | 1.37 |
| | 1.0 | 3051 | 863 | 1.44 |
| | 1.2 | 2894 | 910 | 1.52 |
| | 1.4 | 2739 | 967 | 1.61 |
| T9 | 0.2 | 3868 | 769 | 1.52 |
| | 0.4 | 3839 | 787 | 1.55 |
| | 0.6 | 3727 | 820 | 1.62 |
| | 0.8 | 3631 | 856 | 1.69 |
| | 1.0 | 3513 | 900 | 1.78 |
| | 1.2 | 3394 | 937 | 1.85 |
| | 1.4 | 3274 | 987 | 1.95 |
| T10 | 0.2 | 4122 | 792 | 1.79 |
| | 0.4 | 4001 | 828 | 1.87 |
| | 0.6 | 3881 | 865 | 1.96 |
| | 0.8 | 3800 | 910 | 2.06 |
| | 1.0 | 3594 | 930 | 2.10 |
| | 1.2 | 3519 | 974 | 2.20 |
| | 1.4 | 3391 | 1007 | 2.28 |

shaded speed tap - Gas heating airflow.
**(T1) (T2) and (T6)(T7) are part load only.

**7.5 Ton • 225 MBH Gas Heat Exchanger • High Static Direct Drive**
**Models: DHG0903WH, DHG0904WH, DHG0907WH**

| Down Flow | | | | |
|---|---|---|---|---|
| Speed Tap | ESP | CFM | RPM | BHP |
| T1** | 0.2 | 1954 | 552 | 0.40 |
| | 0.4 | - | - | - |
| | 0.6 | - | - | - |
| | 0.8 | - | - | - |
| | 1.0 | - | - | - |
| | 1.2 | - | - | - |
| | 1.4 | - | - | - |
| | 1.6 | - | - | - |
| | 1.8 | - | - | - |
| | 2.0 | - | - | - |
| T2** | 0.2 | 3527 | 774 | 1.34 |
| | 0.4 | 3332 | 814 | 1.40 |
| | 0.6 | 3180 | 853 | 1.47 |
| | 0.8 | 3061 | 891 | 1.54 |
| | 1.0 | 2889 | 927 | 1.60 |
| | 1.2 | 2735 | 969 | 1.67 |
| | 1.4 | 2563 | 1008 | 1.74 |
| | 1.6 | 2392 | 1050 | 1.81 |
| | 1.8 | 2237 | 1086 | 1.87 |
| | 2.0 | 2077 | 1119 | 1.93 |
| T3 | 0.2 | 3194 | 716 | 1.05 |
| | 0.4 | 3010 | 760 | 1.11 |
| | 0.6 | 2852 | 805 | 1.18 |
| | 0.8 | 2705 | 847 | 1.24 |
| | 1.0 | 2542 | 885 | 1.30 |
| | 1.2 | 2360 | 934 | 1.37 |
| | 1.4 | - | - | - |
| | 1.6 | - | - | - |
| | 1.8 | - | - | - |
| | 2.0 | - | - | - |
| T4 | 0.2 | - | - | - |
| | 0.4 | - | - | - |
| | 0.6 | 3769 | 961 | 2.22 |
| | 0.8 | 3645 | 1000 | 2.32 |
| | 1.0 | 3496 | 1042 | 2.42 |
| | 1.2 | 3398 | 1073 | 2.49 |
| | 1.4 | 3293 | 1099 | 2.55 |
| | 1.6 | 3065 | 1137 | 2.64 |
| | 1.8 | 2958 | 1163 | 2.70 |
| | 2.0 | 2810 | 1208 | 2.80 |
| T5 | 0.2 | - | - | - |
| | 0.4 | - | - | - |
| | 0.6 | - | - | - |
| | 0.8 | - | - | - |
| | 1.0 | 3754 | 1063 | 2.66 |
| | 1.2 | 3662 | 1090 | 2.73 |
| | 1.4 | 3578 | 1115 | 2.80 |
| | 1.6 | 3519 | 1137 | 2.84 |
| | 1.8 | 3325 | 1166 | 2.91 |
| | 2.0 | 3161 | 1203 | 3.01 |
| T6** | 0.2 | 2569 | 626 | 0.66 |
| | 0.4 | 2389 | 678 | 0.72 |
| | 0.6 | 2194 | 732 | 0.78 |
| | 0.8 | 2015 | 780 | 0.83 |
| | 1.0 | 1974 | 821 | 0.87 |
| | 1.2 | - | - | - |
| | 1.4 | - | - | - |
| | 1.6 | - | - | - |
| | 1.8 | - | - | - |
| | 2.0 | - | - | - |

| Horizontal Flow | | | | |
|---|---|---|---|---|
| Speed Tap | ESP | CFM | RPM | BHP |
| T1** | 0.2 | 2102 | 495 | 0.36 |
| | 0.4 | 1906 | 566 | 0.41 |
| | 0.6 | - | - | - |
| | 0.8 | - | - | - |
| | 1.0 | - | - | - |
| | 1.2 | - | - | - |
| | 1.4 | - | - | - |
| | 1.6 | - | - | - |
| | 1.8 | - | - | - |
| | 2.0 | - | - | - |
| T2** | 0.2 | 3642 | 714 | 1.23 |
| | 0.4 | 3544 | 743 | 1.28 |
| | 0.6 | 3415 | 786 | 1.36 |
| | 0.8 | 3278 | 827 | 1.43 |
| | 1.0 | 3147 | 870 | 1.50 |
| | 1.2 | 2998 | 915 | 1.58 |
| | 1.4 | 2852 | 971 | 1.68 |
| | 1.6 | 2666 | 1010 | 1.74 |
| | 1.8 | 2482 | 1060 | 1.83 |
| | 2.0 | 2323 | 1096 | 1.89 |
| T3 | 0.2 | 3336 | 657 | 0.96 |
| | 0.4 | 3185 | 696 | 1.02 |
| | 0.6 | 3029 | 750 | 1.10 |
| | 0.8 | 2862 | 796 | 1.17 |
| | 1.0 | 2699 | 840 | 1.23 |
| | 1.2 | 2509 | 893 | 1.31 |
| | 1.4 | 2320 | 954 | 1.40 |
| | 1.6 | - | - | - |
| | 1.8 | - | - | - |
| | 2.0 | - | - | - |
| T4 | 0.2 | - | - | - |
| | 0.4 | - | - | - |
| | 0.6 | - | - | - |
| | 0.8 | - | - | - |
| | 1.0 | - | - | - |
| | 1.2 | 3674 | 995 | 2.31 |
| | 1.4 | 3566 | 1035 | 2.40 |
| | 1.6 | 3459 | 1067 | 2.48 |
| | 1.8 | 3361 | 1097 | 2.55 |
| | 2.0 | 3261 | 1134 | 2.63 |
| T5 | 0.2 | - | - | - |
| | 0.4 | - | - | - |
| | 0.6 | - | - | - |
| | 0.8 | - | - | - |
| | 1.0 | - | - | - |
| | 1.2 | - | - | - |
| | 1.4 | 3795 | 1047 | 2.62 |
| | 1.6 | 3706 | 1077 | 2.69 |
| | 1.8 | 3641 | 1114 | 2.79 |
| | 2.0 | 3565 | 1145 | 2.86 |
| T6** | 0.2 | 2728 | 568 | 0.60 |
| | 0.4 | 2533 | 625 | 0.66 |
| | 0.6 | 2314 | 695 | 0.74 |
| | 0.8 | 2125 | 749 | 0.79 |
| | 1.0 | 1875 | 792 | 0.84 |
| | 1.2 | - | - | - |
| | 1.4 | - | - | - |
| | 1.6 | - | - | - |
| | 1.8 | - | - | - |
| | 2.0 | - | - | - |

shaded speed tap - Gas heating airflow.
**(T1) (T2) and (T6)(T7) are part load only.

**7.5 Ton • 225 MBH Gas Heat Exchanger • High Static Direct Drive**
**Models: DHG0903WH, DHG0904WH, DHG0907WH**

| Down Flow | | | | |
|---|---|---|---|---|
| Speed Tap | ESP | CFM | RPM | BHP |
| T7** | 0.2 | - | - | - |
| | 0.4 | 3048 | 766 | 1.14 |
| | 0.6 | 2892 | 811 | 1.21 |
| | 0.8 | 2747 | 852 | 1.27 |
| | 1.0 | 2581 | 890 | 1.33 |
| | 1.2 | 2402 | 938 | 1.40 |
| | 1.4 | 2216 | 980 | 1.46 |
| | 1.6 | 2043 | 1023 | 1.53 |
| | 1.8 | 1893 | 1062 | 1.58 |
| | 2.0 | - | - | - |
| T8 | 0.2 | 3744 | 819 | 1.58 |
| | 0.4 | 3536 | 854 | 1.64 |
| | 0.6 | 3378 | 889 | 1.71 |
| | 0.8 | 3286 | 924 | 1.78 |
| | 1.0 | 3144 | 960 | 1.85 |
| | 1.2 | 3009 | 995 | 1.92 |
| | 1.4 | 2855 | 1031 | 1.99 |
| | 1.6 | 2687 | 1072 | 2.06 |
| | 1.8 | 2526 | 1107 | 2.13 |
| | 2.0 | - | - | - |
| T9 | 0.2 | 3998 | 907 | 2.14 |
| | 0.4 | 3905 | 939 | 2.22 |
| | 0.6 | 3812 | 972 | 2.29 |
| | 0.8 | 3693 | 1005 | 2.37 |
| | 1.0 | 3617 | 1041 | 2.46 |
| | 1.2 | 3539 | 1069 | 2.52 |
| | 1.4 | 3478 | 1098 | 2.59 |
| | 1.6 | 3376 | 1127 | 2.66 |
| | 1.8 | 3271 | 1162 | 2.74 |
| | 2.0 | 3111 | 1208 | 2.85 |
| T10 | 0.2 | - | - | - |
| | 0.4 | - | - | - |
| | 0.6 | - | - | - |
| | 0.8 | - | - | - |
| | 1.0 | 4156 | 1104 | 3.08 |
| | 1.2 | 4032 | 1128 | 3.14 |
| | 1.4 | 3908 | 1151 | 3.21 |
| | 1.6 | 3784 | 1175 | 3.27 |
| | 1.8 | 3660 | 1198 | 3.34 |
| | 2.0 | 3536 | 1222 | 3.40 |

| Horizontal Flow | | | | |
|---|---|---|---|---|
| Speed Tap | ESP | CFM | RPM | BHP |
| T7** | 0.2 | - | - | - |
| | 0.4 | - | - | - |
| | 0.6 | 3074 | 754 | 1.13 |
| | 0.8 | 2910 | 800 | 1.19 |
| | 1.0 | 2751 | 843 | 1.26 |
| | 1.2 | 2566 | 895 | 1.34 |
| | 1.4 | 2382 | 956 | 1.43 |
| | 1.6 | 2200 | 998 | 1.49 |
| | 1.8 | 2005 | 1047 | 1.56 |
| | 2.0 | 1836 | 1083 | 1.62 |
| T8 | 0.2 | 3828 | 758 | 1.46 |
| | 0.4 | 3784 | 778 | 1.50 |
| | 0.6 | 3669 | 813 | 1.57 |
| | 0.8 | 3564 | 850 | 1.64 |
| | 1.0 | 3444 | 894 | 1.72 |
| | 1.2 | 3320 | 933 | 1.80 |
| | 1.4 | 3197 | 984 | 1.89 |
| | 1.6 | 3023 | 1020 | 1.96 |
| | 1.8 | 2852 | 1071 | 2.06 |
| | 2.0 | 2703 | 1107 | 2.13 |
| T9 | 0.2 | - | - | - |
| | 0.4 | - | - | - |
| | 0.6 | 4100 | 872 | 2.06 |
| | 0.8 | 4086 | 901 | 2.12 |
| | 1.0 | 3955 | 944 | 2.23 |
| | 1.2 | 3864 | 970 | 2.29 |
| | 1.4 | 3758 | 1013 | 2.39 |
| | 1.6 | 3659 | 1042 | 2.46 |
| | 1.8 | 3525 | 1096 | 2.59 |
| | 2.0 | 3406 | 1132 | 2.67 |
| T10 | 0.2 | - | - | - |
| | 0.4 | - | - | - |
| | 0.6 | - | - | - |
| | 0.8 | - | - | - |
| | 1.0 | - | - | - |
| | 1.2 | - | - | - |
| | 1.4 | 4040 | 1074 | 2.99 |
| | 1.6 | 4023 | 1106 | 3.08 |
| | 1.8 | 3859 | 1138 | 3.17 |
| | 2.0 | 3812 | 1167 | 3.25 |

shaded speed tap - Gas heating airflow.
**(T1) (T2) and (T6)(T7) are part load only.

**8.5 Ton • 130 MBH Gas Heat Exchanger • Standard Static Direct Drive**
**Models: DHG1023DL, DHG1024DL, DHG1027DL**

| Down Flow | | | | |
|---|---|---|---|---|
| Speed Tap | ESP | CFM | RPM | BHP |
| T1** | 0.2 | 1714 | 496 | 0.32 |
| | 0.4 | - | - | - |
| | 0.6 | - | - | - |
| | 0.8 | - | - | - |
| T2** | 0.2 | 2365 | 599 | 0.61 |
| | 0.4 | 2208 | 649 | 0.66 |
| | 0.6 | 2048 | 695 | 0.70 |
| | 0.8 | - | - | - |
| T3 | 0.2 | 2798 | 671 | 0.88 |
| | 0.4 | 2687 | 713 | 0.93 |
| | 0.6 | - | - | - |
| | 0.8 | - | - | - |
| T4 | 0.2 | 3522 | 795 | 1.51 |
| | 0.4 | 3389 | 828 | 1.58 |
| | 0.6 | 3240 | 865 | 1.65 |
| | 0.8 | 3083 | 898 | 1.71 |
| T5 | 0.2 | 3830 | 847 | 1.83 |
| | 0.4 | 3702 | 881 | 1.90 |
| | 0.6 | 3563 | 915 | 1.97 |
| | 0.8 | 3399 | 946 | 2.04 |
| T6** | 0.2 | 1889 | 528 | 0.38 |
| | 0.4 | 1827 | 589 | 0.43 |
| | 0.6 | 1445 | 667 | 0.48 |
| | 0.8 | - | - | - |
| T7** | 0.2 | 2193 | 571 | 0.53 |
| | 0.4 | 2090 | 635 | 0.59 |
| | 0.6 | 1959 | 698 | 0.64 |
| | 0.8 | 1704 | 763 | 0.70 |
| T8 | 0.2 | 2489 | 616 | 0.69 |
| | 0.4 | 2351 | 679 | 0.76 |
| | 0.6 | 2235 | 729 | 0.82 |
| | 0.8 | 2050 | 780 | 0.87 |
| T9 | 0.2 | 2860 | 679 | 0.94 |
| | 0.4 | 2699 | 735 | 1.02 |
| | 0.6 | 2554 | 774 | 1.07 |
| | 0.8 | 2446 | 817 | 1.13 |
| T10 | 0.2 | 3182 | 743 | 1.22 |
| | 0.4 | 3041 | 788 | 1.30 |
| | 0.6 | 2953 | 821 | 1.35 |
| | 0.8 | 2797 | 868 | 1.43 |

| Horizontal Flow | | | | |
|---|---|---|---|---|
| Speed Tap | ESP | CFM | RPM | BHP |
| T1** | 0.2 | 1856 | 423 | 0.27 |
| | 0.4 | - | - | - |
| | 0.6 | - | - | - |
| | 0.8 | - | - | - |
| T2** | 0.2 | 2671 | 503 | 0.51 |
| | 0.4 | 2492 | 568 | 0.57 |
| | 0.6 | 2335 | 628 | 0.64 |
| | 0.8 | 2027 | 690 | 0.70 |
| T3 | 0.2 | 3144 | 564 | 0.74 |
| | 0.4 | 3005 | 607 | 0.79 |
| | 0.6 | 2824 | 671 | 0.88 |
| | 0.8 | 2661 | 722 | 0.95 |
| T4 | 0.2 | 3921 | 655 | 1.25 |
| | 0.4 | 3775 | 700 | 1.33 |
| | 0.6 | 3630 | 745 | 1.42 |
| | 0.8 | 3449 | 786 | 1.50 |
| T5 | 0.2 | 4210 | 694 | 1.49 |
| | 0.4 | 4071 | 737 | 1.59 |
| | 0.6 | 3942 | 777 | 1.67 |
| | 0.8 | 3746 | 819 | 1.76 |
| T6** | 0.2 | 2056 | 443 | 0.32 |
| | 0.4 | 1887 | 522 | 0.38 |
| | 0.6 | 1702 | 591 | 0.43 |
| | 0.8 | 1327 | 707 | 0.51 |
| T7** | 0.2 | 2445 | 487 | 0.45 |
| | 0.4 | 2283 | 556 | 0.51 |
| | 0.6 | 2098 | 617 | 0.57 |
| | 0.8 | 1828 | 688 | 0.64 |
| T8 | 0.2 | 2760 | 545 | 0.61 |
| | 0.4 | 2630 | 587 | 0.66 |
| | 0.6 | 2487 | 641 | 0.72 |
| | 0.8 | 2264 | 701 | 0.79 |
| T9 | 0.2 | 3234 | 581 | 0.80 |
| | 0.4 | 3043 | 626 | 0.87 |
| | 0.6 | 2866 | 675 | 0.93 |
| | 0.8 | 2677 | 729 | 1.01 |
| T10 | 0.2 | 3655 | 604 | 0.99 |
| | 0.4 | 3427 | 663 | 1.09 |
| | 0.6 | 3210 | 714 | 1.17 |
| | 0.8 | 3066 | 759 | 1.25 |

shaded speed tap - Gas heating airflow.
**(T1) (T2) and (T6)(T7) are part load only.

**8.5 Ton • 130 MBH Gas Heat Exchanger • Medium Static Direct Drive**
**Models: DHG1023LL, DHG1024LL, DHG1027LL**

| Down Flow | | | | |
|---|---|---|---|---|
| Speed Tap | ESP | CFM | RPM | BHP |
| T1** | 0.2 | 1714 | 496 | 0.32 |
| | 0.4 | - | - | - |
| | 0.6 | - | - | - |
| | 0.8 | - | - | - |
| | 1.0 | - | - | - |
| | 1.2 | - | - | - |
| | 1.4 | - | - | - |
| T2** | 0.2 | 3114 | 722 | 1.12 |
| | 0.4 | 2977 | 761 | 1.18 |
| | 0.6 | 2825 | 800 | 1.24 |
| | 0.8 | 2634 | 846 | 1.31 |
| | 1.0 | 2474 | 878 | 1.36 |
| | 1.2 | 2236 | 931 | 1.44 |
| | 1.4 | 1990 | 986 | 1.53 |
| T3 | 0.2 | 2798 | 671 | 0.88 |
| | 0.4 | 2687 | 713 | 0.93 |
| | 0.6 | - | - | - |
| | 0.8 | - | - | - |
| | 1.0 | - | - | - |
| | 1.2 | - | - | - |
| | 1.4 | - | - | - |
| T4 | 0.2 | 3997 | 874 | 1.99 |
| | 0.4 | 3869 | 909 | 2.07 |
| | 0.6 | 3740 | 942 | 2.14 |
| | 0.8 | 3578 | 975 | 2.22 |
| | 1.0 | 3417 | 1009 | 2.29 |
| | 1.2 | 3257 | 1039 | 2.36 |
| | 1.4 | 3091 | 1069 | 2.43 |
| T5 | 0.2 | - | - | - |
| | 0.4 | 4125 | 958 | 2.46 |
| | 0.6 | 3997 | 992 | 2.55 |
| | 0.8 | 3806 | 1021 | 2.63 |
| | 1.0 | 3701 | 1056 | 2.72 |
| | 1.2 | 3547 | 1081 | 2.78 |
| | 1.4 | 3374 | 1101 | 2.83 |
| T6** | 0.2 | 1863 | 520 | 0.37 |
| | 0.4 | 1748 | 587 | 0.42 |
| | 0.6 | 1403 | 671 | 0.48 |
| | 0.8 | - | - | - |
| | 1.0 | - | - | - |
| | 1.2 | - | - | - |
| | 1.4 | - | - | - |
| T7** | 0.2 | 2398 | 602 | 0.64 |
| | 0.4 | 2270 | 665 | 0.70 |
| | 0.6 | 2161 | 719 | 0.76 |
| | 0.8 | 1948 | 774 | 0.82 |
| | 1.0 | 1818 | 821 | 0.87 |
| | 1.2 | 1520 | 901 | 0.95 |
| | 1.4 | 1487 | 951 | 1.01 |
| T8 | 0.2 | 2398 | 602 | 0.64 |
| | 0.4 | 2270 | 665 | 0.70 |
| | 0.6 | 2161 | 719 | 0.76 |
| | 0.8 | 1948 | 774 | 0.82 |
| | 1.0 | 1818 | 821 | 0.87 |
| | 1.2 | - | - | - |
| | 1.4 | - | - | - |
| T9 | 0.2 | 3203 | 753 | 1.25 |
| | 0.4 | 3097 | 795 | 1.32 |
| | 0.6 | 2992 | 833 | 1.39 |
| | 0.8 | 2871 | 874 | 1.46 |
| | 1.0 | 2716 | 917 | 1.53 |
| | 1.2 | 2580 | 951 | 1.59 |
| | 1.4 | 2375 | 1004 | 1.67 |
| T10 | 0.2 | 3879 | 753 | 1.72 |
| | 0.4 | 3777 | 802 | 1.83 |
| | 0.6 | 3658 | 923 | 2.11 |
| | 0.8 | 3532 | 980 | 2.24 |
| | 1.0 | 3416 | 1008 | 2.30 |
| | 1.2 | 3280 | 1038 | 2.37 |
| | 1.4 | 3152 | 1071 | 2.45 |

| Horizontal Flow | | | | |
|---|---|---|---|---|
| Speed Tap | ESP | CFM | RPM | BHP |
| T1** | 0.2 | 1856 | 423 | 0.27 |
| | 0.4 | - | - | - |
| | 0.6 | - | - | - |
| | 0.8 | - | - | - |
| | 1.0 | - | - | - |
| | 1.2 | - | - | - |
| | 1.4 | - | - | - |
| T2** | 0.2 | 3458 | 603 | 0.93 |
| | 0.4 | 3292 | 658 | 1.02 |
| | 0.6 | 3155 | 700 | 1.08 |
| | 0.8 | 3007 | 747 | 1.16 |
| | 1.0 | 2844 | 797 | 1.23 |
| | 1.2 | 2681 | 836 | 1.29 |
| | 1.4 | 2469 | 885 | 1.37 |
| T3 | 0.2 | 3144 | 564 | 0.74 |
| | 0.4 | 3005 | 607 | 0.79 |
| | 0.6 | 2824 | 671 | 0.88 |
| | 0.8 | 2661 | 722 | 0.95 |
| | 1.0 | - | - | - |
| | 1.2 | - | - | - |
| | 1.4 | - | - | - |
| T4 | 0.2 | - | - | - |
| | 0.4 | 4200 | 754 | 1.71 |
| | 0.6 | 4070 | 791 | 1.80 |
| | 0.8 | 3879 | 838 | 1.91 |
| | 1.0 | 3699 | 874 | 1.99 |
| | 1.2 | 3535 | 923 | 2.10 |
| | 1.4 | 3341 | 946 | 2.15 |
| T5 | 0.2 | - | - | - |
| | 0.4 | - | - | - |
| | 0.6 | - | - | - |
| | 0.8 | 4194 | 863 | 2.22 |
| | 1.0 | 4012 | 898 | 2.31 |
| | 1.2 | 3879 | 955 | 2.45 |
| | 1.4 | 3683 | 967 | 2.49 |
| T6** | 0.2 | 2029 | 440 | 0.31 |
| | 0.4 | 1855 | 519 | 0.37 |
| | 0.6 | 1666 | 593 | 0.42 |
| | 0.8 | - | - | - |
| | 1.0 | - | - | - |
| | 1.2 | - | - | - |
| | 1.4 | - | - | - |
| T7** | 0.2 | 2645 | 528 | 0.56 |
| | 0.4 | 2515 | 577 | 0.61 |
| | 0.6 | 2360 | 634 | 0.67 |
| | 0.8 | 2137 | 694 | 0.74 |
| | 1.0 | 1801 | 757 | 0.80 |
| | 1.2 | 1532 | 814 | 0.86 |
| | 1.4 | - | - | - |
| T8 | 0.2 | 2645 | 528 | 0.56 |
| | 0.4 | 2515 | 577 | 0.61 |
| | 0.6 | 2360 | 634 | 0.67 |
| | 0.8 | 2137 | 694 | 0.74 |
| | 1.0 | 1801 | 757 | 0.80 |
| | 1.2 | - | - | - |
| | 1.4 | - | - | - |
| T9 | 0.2 | 3664 | 603 | 1.01 |
| | 0.4 | 3429 | 666 | 1.11 |
| | 0.6 | 3240 | 718 | 1.20 |
| | 0.8 | 3088 | 761 | 1.27 |
| | 1.0 | 2883 | 808 | 1.35 |
| | 1.2 | 2651 | 857 | 1.43 |
| | 1.4 | 2470 | 900 | 1.50 |
| T10 | 0.2 | - | - | - |
| | 0.4 | - | - | - |
| | 0.6 | - | - | - |
| | 0.8 | - | - | - |
| | 1.0 | 3711 | 872 | 1.99 |
| | 1.2 | 3501 | 907 | 2.07 |
| | 1.4 | 2986 | 951 | 2.17 |

shaded speed tap - Gas heating airflow.
**(T1) (T2) and (T6)(T7) are part load only.

**8.5 Ton • 130 MBH Gas Heat Exchanger • High Static Direct Drive**
**Models: DHG1023WL, DHG1024WL, DHG1027WL**

| Down Flow | | | | |
|---|---|---|---|---|
| **Speed Tap** | **ESP** | **CFM** | **RPM** | **BHP** |
| T1** | 0.2 | 1714 | 496 | 0.32 |
| | 0.4 | - | - | - |
| | 0.6 | - | - | - |
| | 0.8 | - | - | - |
| | 1.0 | - | - | - |
| | 1.2 | - | - | - |
| | 1.4 | - | - | - |
| | 1.6 | - | - | - |
| | 1.8 | - | - | - |
| | 2.0 | - | - | - |
| T2** | 0.2 | 3674 | 820 | 1.66 |
| | 0.4 | 3544 | 853 | 1.73 |
| | 0.6 | 3402 | 889 | 1.80 |
| | 0.8 | 3235 | 920 | 1.86 |
| | 1.0 | 3055 | 956 | 1.94 |
| | 1.2 | 2891 | 986 | 2.00 |
| | 1.4 | 2708 | 1011 | 2.05 |
| | 1.6 | 2499 | 1071 | 2.17 |
| | 1.8 | 2307 | 1103 | 2.23 |
| | 2.0 | 2054 | 1146 | 2.32 |
| T3 | 0.2 | 2798 | 671 | 0.88 |
| | 0.4 | 2687 | 713 | 0.93 |
| | 0.6 | - | - | - |
| | 0.8 | - | - | - |
| | 1.0 | - | - | - |
| | 1.2 | - | - | - |
| | 1.4 | - | - | - |
| | 1.6 | - | - | - |
| | 1.8 | - | - | - |
| | 2.0 | - | - | - |
| T4 | 0.2 | 4166 | 907 | 2.22 |
| | 0.4 | 4029 | 939 | 2.30 |
| | 0.6 | 3906 | 969 | 2.37 |
| | 0.8 | 3717 | 1003 | 2.45 |
| | 1.0 | 3544 | 1037 | 2.54 |
| | 1.2 | 3394 | 1064 | 2.60 |
| | 1.4 | 3219 | 1092 | 2.67 |
| | 1.6 | 3060 | 1121 | 2.74 |
| | 1.8 | 2887 | 1148 | 2.81 |
| | 2.0 | 2721 | 1176 | 2.88 |
| T5 | 0.2 | - | - | - |
| | 0.4 | - | - | - |
| | 0.6 | 4221 | 1022 | 2.85 |
| | 0.8 | 4047 | 1052 | 2.93 |
| | 1.0 | 3889 | 1084 | 3.02 |
| | 1.2 | 3734 | 1109 | 3.09 |
| | 1.4 | 3555 | 1133 | 3.16 |
| | 1.6 | 3396 | 1162 | 3.24 |
| | 1.8 | 3210 | 1186 | 3.30 |
| | 2.0 | 3041 | 1211 | 3.37 |
| T6** | 0.2 | 2398 | 602 | 0.64 |
| | 0.4 | 2270 | 665 | 0.70 |
| | 0.6 | 2161 | 719 | 0.76 |
| | 0.8 | 1948 | 774 | 0.82 |
| | 1.0 | 1818 | 821 | 0.87 |
| | 1.2 | 1520 | 901 | 0.95 |
| | 1.4 | - | - | - |
| | 1.6 | - | - | - |
| | 1.8 | - | - | - |
| | 2.0 | - | - | - |

| Horizontal Flow | | | | |
|---|---|---|---|---|
| **Speed Tap** | **ESP** | **CFM** | **RPM** | **BHP** |
| T1** | 0.2 | 1856 | 423 | 0.27 |
| | 0.4 | - | - | - |
| | 0.6 | - | - | - |
| | 0.8 | - | - | - |
| | 1.0 | - | - | - |
| | 1.2 | - | - | - |
| | 1.4 | - | - | - |
| | 1.6 | - | - | - |
| | 1.8 | - | - | - |
| | 2.0 | - | - | - |
| T2** | 0.2 | 4061 | 675 | 1.37 |
| | 0.4 | 3919 | 720 | 1.46 |
| | 0.6 | 3792 | 761 | 1.54 |
| | 0.8 | 3610 | 802 | 1.62 |
| | 1.0 | 3427 | 845 | 1.71 |
| | 1.2 | 3261 | 894 | 1.81 |
| | 1.4 | 3042 | 919 | 1.86 |
| | 1.6 | 2865 | 962 | 1.95 |
| | 1.8 | 2649 | 1020 | 2.06 |
| | 2.0 | 2487 | 1041 | 2.11 |
| T3 | 0.2 | 3144 | 564 | 0.74 |
| | 0.4 | 3005 | 607 | 0.79 |
| | 0.6 | 2824 | 671 | 0.88 |
| | 0.8 | 2661 | 722 | 0.95 |
| | 1.0 | - | - | - |
| | 1.2 | - | - | - |
| | 1.4 | - | - | - |
| | 1.6 | - | - | - |
| | 1.8 | - | - | - |
| | 2.0 | - | - | - |
| T4 | 0.2 | - | - | - |
| | 0.4 | - | - | - |
| | 0.6 | 4261 | 812 | 1.99 |
| | 0.8 | 4051 | 849 | 2.08 |
| | 1.0 | 3857 | 885 | 2.17 |
| | 1.2 | 3718 | 922 | 2.25 |
| | 1.4 | 3536 | 957 | 2.34 |
| | 1.6 | 3369 | 993 | 2.43 |
| | 1.8 | 3199 | 1028 | 2.52 |
| | 2.0 | 3048 | 1064 | 2.60 |
| T5 | 0.2 | - | - | - |
| | 0.4 | - | - | - |
| | 0.6 | - | - | - |
| | 0.8 | - | - | - |
| | 1.0 | - | - | - |
| | 1.2 | 4145 | 950 | 2.65 |
| | 1.4 | 3925 | 986 | 2.75 |
| | 1.6 | 3783 | 1018 | 2.84 |
| | 1.8 | 3606 | 1051 | 2.93 |
| | 2.0 | 3415 | 1085 | 3.02 |
| T6** | 0.2 | 2645 | 528 | 0.56 |
| | 0.4 | 2515 | 577 | 0.61 |
| | 0.6 | 2360 | 634 | 0.67 |
| | 0.8 | 2137 | 694 | 0.74 |
| | 1.0 | 1801 | 757 | 0.80 |
| | 1.2 | 1532 | 814 | 0.86 |
| | 1.4 | - | - | - |
| | 1.6 | - | - | - |
| | 1.8 | - | - | - |
| | 2.0 | - | - | - |

shaded speed tap - Gas heating airflow.
**(T1) (T2) and (T6)(T7) are part load only.

**8.5 Ton • 130 MBH Gas Heat Exchanger • High Static Direct Drive**
**Models: DHG1023WL, DHG1024WL, DHG1027WL**

| Down Flow | | | | |
|---|---|---|---|---|
| Speed Tap | ESP | CFM | RPM | BHP |
| T7** | 0.2 | - | - | - |
| | 0.4 | 2729 | 741 | 1.06 |
| | 0.6 | 2574 | 789 | 1.13 |
| | 0.8 | 2447 | 824 | 1.18 |
| | 1.0 | 2310 | 847 | 1.21 |
| | 1.2 | 2126 | 857 | 1.22 |
| | 1.4 | 1858 | 948 | 1.35 |
| | 1.6 | 1746 | 1021 | 1.46 |
| | 1.8 | 1577 | 1075 | 1.54 |
| | 2.0 | 1420 | 1111 | 1.59 |
| T8 | 0.2 | 2947 | 695 | 1.01 |
| | 0.4 | 2787 | 749 | 1.09 |
| | 0.6 | 2649 | 786 | 1.14 |
| | 0.8 | 2539 | 829 | 1.20 |
| | 1.0 | 2287 | 872 | 1.26 |
| | 1.2 | 2202 | 917 | 1.33 |
| | 1.4 | 1896 | 972 | 1.41 |
| | 1.6 | - | - | - |
| | 1.8 | - | - | - |
| | 2.0 | - | - | - |
| T9 | 0.2 | 3704 | 751 | 1.59 |
| | 0.4 | 3606 | 786 | 1.67 |
| | 0.6 | 3491 | 903 | 1.92 |
| | 0.8 | 3366 | 951 | 2.02 |
| | 1.0 | 3247 | 981 | 2.08 |
| | 1.2 | 3108 | 1015 | 2.15 |
| | 1.4 | 2970 | 1050 | 2.23 |
| | 1.6 | 2833 | 1082 | 2.30 |
| | 1.8 | 2661 | 1117 | 2.37 |
| | 2.0 | 2477 | 1179 | 2.50 |
| T10 | 0.2 | - | - | - |
| | 0.4 | - | - | - |
| | 0.6 | - | - | - |
| | 0.8 | - | - | - |
| | 1.0 | 3867 | 1078 | 3.00 |
| | 1.2 | 3743 | 1109 | 3.09 |
| | 1.4 | 3606 | 1138 | 3.17 |
| | 1.6 | 3474 | 1165 | 3.25 |
| | 1.8 | 3340 | 1193 | 3.32 |
| | 2.0 | 3204 | 1219 | 3.40 |

| Horizontal Flow | | | | |
|---|---|---|---|---|
| Speed Tap | ESP | CFM | RPM | BHP |
| T7** | 0.2 | - | - | - |
| | 0.4 | - | - | - |
| | 0.6 | - | - | - |
| | 0.8 | 2767 | 734 | 1.05 |
| | 1.0 | 2539 | 781 | 1.12 |
| | 1.2 | 2280 | 837 | 1.20 |
| | 1.4 | 2083 | 892 | 1.27 |
| | 1.6 | 1834 | 946 | 1.35 |
| | 1.8 | 1477 | 1014 | 1.45 |
| | 2.0 | - | - | - |
| T8 | 0.2 | 3354 | 587 | 0.85 |
| | 0.4 | 3145 | 635 | 0.92 |
| | 0.6 | 2952 | 685 | 0.99 |
| | 0.8 | 2776 | 736 | 1.07 |
| | 1.0 | 2573 | 785 | 1.14 |
| | 1.2 | 2318 | 840 | 1.22 |
| | 1.4 | 2119 | 896 | 1.30 |
| | 1.6 | 1875 | 950 | 1.38 |
| | 1.8 | - | - | - |
| | 2.0 | - | - | - |
| T9 | 0.2 | - | - | - |
| | 0.4 | - | - | - |
| | 0.6 | - | - | - |
| | 0.8 | 3761 | 817 | 1.73 |
| | 1.0 | 3588 | 854 | 1.81 |
| | 1.2 | 3342 | 894 | 1.90 |
| | 1.4 | 3145 | 938 | 1.99 |
| | 1.6 | 2888 | 981 | 2.08 |
| | 1.8 | 2688 | 1022 | 2.17 |
| | 2.0 | 2433 | 1065 | 2.26 |
| T10 | 0.2 | - | - | - |
| | 0.4 | - | - | - |
| | 0.6 | - | - | - |
| | 0.8 | - | - | - |
| | 1.0 | - | - | - |
| | 1.2 | - | - | - |
| | 1.4 | - | - | - |
| | 1.6 | 3767 | 1022 | 2.85 |
| | 1.8 | 3581 | 1060 | 2.95 |
| | 2.0 | 3370 | 1096 | 3.05 |

shaded speed tap - Gas heating airflow.
**(T1) (T2) and (T6)(T7) are part load only.

**8.5 Ton • 180 MBH Gas Heat Exchanger • Standard Static Direct Drive**
**Models: DHG1023DM, DHG1024DM, DHG1027DM**

| Down Flow | | | | |
|---|---|---|---|---|
| Speed Tap | ESP | CFM | RPM | BHP |
| T1** | 0.2 | 1902 | 520 | 0.37 |
| | 0.4 | - | - | - |
| | 0.6 | - | - | - |
| | 0.8 | - | - | - |
| T2** | 0.2 | 2365 | 599 | 0.61 |
| | 0.4 | 2208 | 649 | 0.66 |
| | 0.6 | 2048 | 695 | 0.70 |
| | 0.8 | 1892 | 736 | 0.74 |
| T3 | 0.2 | 3026 | 709 | 1.06 |
| | 0.4 | 2905 | 748 | 1.11 |
| | 0.6 | 2735 | 788 | 1.17 |
| | 0.8 | 2593 | 831 | 1.24 |
| T4 | 0.2 | 3522 | 795 | 1.51 |
| | 0.4 | 3389 | 828 | 1.58 |
| | 0.6 | 3240 | 865 | 1.65 |
| | 0.8 | 3083 | 898 | 1.71 |
| T5 | 0.2 | 3830 | 847 | 1.83 |
| | 0.4 | 3702 | 881 | 1.90 |
| | 0.6 | 3563 | 915 | 1.97 |
| | 0.8 | 3399 | 946 | 2.04 |
| T6** | 0.2 | 1539 | 469 | 0.27 |
| | 0.4 | 1317 | 556 | 0.31 |
| | 0.6 | 994 | 634 | 0.36 |
| | 0.8 | - | - | - |
| T7** | 0.2 | 2327 | 591 | 0.60 |
| | 0.4 | 2207 | 655 | 0.66 |
| | 0.6 | 2098 | 712 | 0.72 |
| | 0.8 | 1865 | 770 | 0.78 |
| T8 | 0.2 | 2266 | 588 | 0.56 |
| | 0.4 | 2126 | 638 | 0.61 |
| | 0.6 | 1989 | 694 | 0.66 |
| | 0.8 | 1747 | 765 | 0.73 |
| T9 | 0.2 | 2743 | 658 | 0.85 |
| | 0.4 | 2585 | 717 | 0.93 |
| | 0.6 | 2443 | 759 | 0.99 |
| | 0.8 | - | - | - |
| T10 | 0.2 | 3182 | 743 | 1.22 |
| | 0.4 | 3041 | 788 | 1.30 |
| | 0.6 | 2953 | 821 | 1.35 |
| | 0.8 | 2797 | 868 | 1.43 |

| Horizontal Flow | | | | |
|---|---|---|---|---|
| Speed Tap | ESP | CFM | RPM | BHP |
| T1** | 0.2 | 2029 | 440 | 0.31 |
| | 0.4 | - | - | - |
| | 0.6 | - | - | - |
| | 0.8 | - | - | - |
| T2** | 0.2 | 2671 | 503 | 0.51 |
| | 0.4 | 2492 | 568 | 0.57 |
| | 0.6 | 2335 | 628 | 0.64 |
| | 0.8 | 2027 | 690 | 0.70 |
| T3 | 0.2 | 3391 | 593 | 0.88 |
| | 0.4 | 3245 | 641 | 0.95 |
| | 0.6 | 3095 | 693 | 1.03 |
| | 0.8 | 2948 | 739 | 1.10 |
| T4 | 0.2 | 3921 | 655 | 1.25 |
| | 0.4 | 3775 | 700 | 1.33 |
| | 0.6 | 3630 | 745 | 1.42 |
| | 0.8 | 3449 | 786 | 1.50 |
| T5 | 0.2 | 4210 | 694 | 1.49 |
| | 0.4 | 4071 | 737 | 1.59 |
| | 0.6 | 3942 | 777 | 1.67 |
| | 0.8 | 3746 | 819 | 1.76 |
| T6** | 0.2 | 1650 | 405 | 0.23 |
| | 0.4 | 1369 | 515 | 0.29 |
| | 0.6 | 1105 | 589 | 0.33 |
| | 0.8 | - | - | - |
| T7** | 0.2 | 2571 | 513 | 0.52 |
| | 0.4 | 2433 | 570 | 0.58 |
| | 0.6 | 2261 | 630 | 0.64 |
| | 0.8 | 2042 | 690 | 0.70 |
| T8 | 0.2 | 2491 | 493 | 0.47 |
| | 0.4 | 2318 | 560 | 0.53 |
| | 0.6 | 2125 | 625 | 0.60 |
| | 0.8 | 1918 | 683 | 0.65 |
| T9 | 0.2 | 3073 | 572 | 0.74 |
| | 0.4 | 2909 | 613 | 0.80 |
| | 0.6 | 2751 | 663 | 0.86 |
| | 0.8 | 2547 | 719 | 0.93 |
| T10 | 0.2 | 3655 | 604 | 0.99 |
| | 0.4 | 3427 | 663 | 1.09 |
| | 0.6 | 3210 | 714 | 1.17 |
| | 0.8 | 3066 | 759 | 1.25 |

shaded speed tap - Gas heating airflow.
**(T1) (T2) and (T6)(T7) are part load only.

**8.5 Ton • 180 MBH Gas Heat Exchanger • Medium Static Direct Drive**
**Models: DHG1023LM, DHG1024LM, DHG1027LM**

| Down Flow | | | | |
|---|---|---|---|---|
| **Speed Tap** | **ESP** | **CFM** | **RPM** | **BHP** |
| **T1**** | 0.2 | 1863 | 520 | 0.37 |
| | 0.4 | - | - | - |
| | 0.6 | - | - | - |
| | 0.8 | - | - | - |
| | 1.0 | - | - | - |
| | 1.2 | - | - | - |
| | 1.4 | - | - | - |
| **T2**** | 0.2 | 3114 | 722 | 1.12 |
| | 0.4 | 2977 | 761 | 1.18 |
| | 0.6 | 2825 | 800 | 1.24 |
| | 0.8 | 2634 | 846 | 1.31 |
| | 1.0 | 2474 | 878 | 1.36 |
| | 1.2 | 2236 | 931 | 1.44 |
| | 1.4 | 1990 | 986 | 1.53 |
| **T3** | 0.2 | 3026 | 709 | 1.06 |
| | 0.4 | 2905 | 748 | 1.11 |
| | 0.6 | 2735 | 788 | 1.17 |
| | 0.8 | 2593 | 831 | 1.24 |
| | 1.0 | - | - | - |
| | 1.2 | - | - | - |
| | 1.4 | - | - | - |
| **T4** | 0.2 | 3997 | 874 | 1.99 |
| | 0.4 | 3869 | 909 | 2.07 |
| | 0.6 | 3740 | 942 | 2.14 |
| | 0.8 | 3578 | 975 | 2.22 |
| | 1.0 | 3417 | 1009 | 2.29 |
| | 1.2 | 3257 | 1039 | 2.36 |
| | 1.4 | 3091 | 1069 | 2.43 |
| **T5** | 0.2 | - | - | - |
| | 0.4 | 4125 | 958 | 2.46 |
| | 0.6 | 3997 | 992 | 2.55 |
| | 0.8 | 3806 | 1021 | 2.63 |
| | 1.0 | 3701 | 1056 | 2.72 |
| | 1.2 | 3547 | 1081 | 2.78 |
| | 1.4 | 3374 | 1101 | 2.83 |
| **T6**** | 0.2 | 2137 | 563 | 0.50 |
| | 0.4 | 2041 | 626 | 0.56 |
| | 0.6 | 1888 | 692 | 0.61 |
| | 0.8 | - | - | - |
| | 1.0 | - | - | - |
| | 1.2 | - | - | - |
| | 1.4 | - | - | - |
| **T7**** | 0.2 | 2948 | 681 | 0.97 |
| | 0.4 | 2729 | 741 | 1.06 |
| | 0.6 | 2574 | 789 | 1.13 |
| | 0.8 | 2447 | 824 | 1.18 |
| | 1.0 | 2310 | 847 | 1.21 |
| | 1.2 | 2126 | 857 | 1.22 |
| | 1.4 | 1858 | 948 | 1.35 |
| **T8** | 0.2 | 3256 | 760 | 1.30 |
| | 0.4 | 3128 | 802 | 1.37 |
| | 0.6 | 3059 | 834 | 1.42 |
| | 0.8 | 2885 | 884 | 1.51 |
| | 1.0 | 2779 | 916 | 1.6 |
| | 1.2 | 2619 | 955 | 1.63 |
| | 1.4 | 2449 | 1000 | 1.71 |
| **T9** | 0.2 | 3571 | 777 | 1.55 |
| | 0.4 | 3475 | 815 | 1.63 |
| | 0.6 | 3364 | 887 | 1.77 |
| | 0.8 | 3239 | 920 | 1.84 |
| | 1.0 | 3115 | 957 | 1.91 |
| | 1.2 | 2974 | 997 | 2.00 |
| | 1.4 | 2825 | 1031 | 2.06 |
| **T10** | 0.2 | 3879 | 753 | 1.72 |
| | 0.4 | 3777 | 802 | 1.83 |
| | 0.6 | 3658 | 923 | 2.11 |
| | 0.8 | 3532 | 980 | 2.24 |
| | 1.0 | 3416 | 1008 | 2.30 |
| | 1.2 | 3280 | 1038 | 2.37 |
| | 1.4 | 3152 | 1071 | 2.45 |

| Horizontal Flow | | | | |
|---|---|---|---|---|
| **Speed Tap** | **ESP** | **CFM** | **RPM** | **BHP** |
| **T1**** | 0.2 | 2029 | 440 | 0.31 |
| | 0.4 | 1855 | 519 | 0.37 |
| | 0.6 | - | - | - |
| | 0.8 | - | - | - |
| | 1.0 | - | - | - |
| | 1.2 | - | - | - |
| | 1.4 | - | - | - |
| **T2**** | 0.2 | 3458 | 603 | 0.93 |
| | 0.4 | 3292 | 658 | 1.02 |
| | 0.6 | 3155 | 700 | 1.08 |
| | 0.8 | 3007 | 747 | 1.16 |
| | 1.0 | 2844 | 797 | 1.23 |
| | 1.2 | 2681 | 836 | 1.29 |
| | 1.4 | 2469 | 885 | 1.37 |
| **T3** | 0.2 | 3391 | 593 | 0.88 |
| | 0.4 | 3245 | 641 | 0.95 |
| | 0.6 | 3095 | 693 | 1.03 |
| | 0.8 | 2948 | 739 | 1.10 |
| | 1.0 | 2789 | 789 | 1.17 |
| | 1.2 | 2614 | 847 | 1.26 |
| | 1.4 | - | - | - |
| **T4** | 0.2 | - | - | - |
| | 0.4 | 4200 | 754 | 1.71 |
| | 0.6 | 4070 | 791 | 1.80 |
| | 0.8 | 3879 | 838 | 1.91 |
| | 1.0 | 3699 | 874 | 1.99 |
| | 1.2 | 3535 | 923 | 2.10 |
| | 1.4 | 3341 | 946 | 2.15 |
| **T5** | 0.2 | - | - | - |
| | 0.4 | - | - | - |
| | 0.6 | - | - | - |
| | 0.8 | 4194 | 863 | 2.22 |
| | 1.0 | 4012 | 898 | 2.31 |
| | 1.2 | 3879 | 955 | 2.45 |
| | 1.4 | 3683 | 967 | 2.49 |
| **T6**** | 0.2 | 2382 | 479 | 0.42 |
| | 0.4 | 2229 | 549 | 0.49 |
| | 0.6 | 2053 | 611 | 0.54 |
| | 0.8 | - | - | - |
| | 1.0 | - | - | - |
| | 1.2 | - | - | - |
| | 1.4 | - | - | - |
| **T7**** | 0.2 | 3346 | 591 | 0.84 |
| | 0.4 | 3123 | 632 | 0.90 |
| | 0.6 | 2931 | 681 | 0.97 |
| | 0.8 | 2767 | 734 | 1.05 |
| | 1.0 | 2539 | 781 | 1.12 |
| | 1.2 | 2280 | 837 | 1.20 |
| | 1.4 | 2083 | 892 | 1.27 |
| **T8** | 0.2 | 3734 | 613 | 1.05 |
| | 0.4 | 3520 | 673 | 1.15 |
| | 0.6 | 3311 | 723 | 1.24 |
| | 0.8 | 3172 | 767 | 1.31 |
| | 1.0 | 2951 | 811 | 1.39 |
| | 1.2 | 2724 | 859 | 1.47 |
| | 1.4 | 2547 | 909 | 1.55 |
| **T9** | 0.2 | 3992 | 669 | 1.34 |
| | 0.4 | 3881 | 710 | 1.42 |
| | 0.6 | 3776 | 756 | 1.51 |
| | 0.8 | 3631 | 804 | 1.61 |
| | 1.0 | 3474 | 841 | 1.68 |
| | 1.2 | 3329 | 884 | 1.77 |
| | 1.4 | 3125 | 928 | 1.86 |
| **T10** | 0.2 | 4350 | 708 | 1.62 |
| | 0.4 | 4212 | 747 | 1.71 |
| | 0.6 | 4054 | 789 | 1.80 |
| | 0.8 | 3912 | 834 | 1.91 |
| | 1.0 | 3711 | 872 | 1.99 |
| | 1.2 | 3501 | 907 | 2.07 |
| | 1.4 | 2986 | 951 | 2.17 |

shaded speed tap - Gas heating airflow.
**(T1) (T2) and (T6)(T7) are part load only.

**8.5 Ton • 180 MBH Gas Heat Exchanger • High Static Direct Drive**
**Models: DHG1023WM, DHG1024WM, DHG1027WM**

| Down Flow | | | | |
|---|---|---|---|---|
| Speed Tap | ESP | CFM | RPM | BHP |
| T1** | 0.2 | 1863 | 520 | 0.37 |
| | 0.4 | - | - | - |
| | 0.6 | - | - | - |
| | 0.8 | - | - | - |
| | 1.0 | - | - | - |
| | 1.2 | - | - | - |
| | 1.4 | - | - | - |
| | 1.6 | - | - | - |
| | 1.8 | - | - | - |
| | 2.0 | - | - | - |
| T2** | 0.2 | 3674 | 820 | 1.66 |
| | 0.4 | 3544 | 853 | 1.73 |
| | 0.6 | 3402 | 889 | 1.80 |
| | 0.8 | 3235 | 920 | 1.86 |
| | 1.0 | 3055 | 956 | 1.94 |
| | 1.2 | 2891 | 986 | 2.00 |
| | 1.4 | 2708 | 1011 | 2.05 |
| | 1.6 | 2499 | 1071 | 2.17 |
| | 1.8 | 2307 | 1103 | 2.23 |
| | 2.0 | 2054 | 1146 | 2.32 |
| T3 | 0.2 | 3026 | 709 | 1.06 |
| | 0.4 | 2905 | 748 | 1.11 |
| | 0.6 | 2735 | 788 | 1.17 |
| | 0.8 | 2593 | 831 | 1.24 |
| | 1.0 | - | - | - |
| | 1.2 | - | - | - |
| | 1.4 | - | - | - |
| | 1.6 | - | - | - |
| | 1.8 | - | - | - |
| | 2.0 | - | - | - |
| T4 | 0.2 | 4166 | 907 | 2.22 |
| | 0.4 | 4029 | 939 | 2.30 |
| | 0.6 | 3906 | 969 | 2.37 |
| | 0.8 | 3717 | 1003 | 2.45 |
| | 1.0 | 3544 | 1037 | 2.54 |
| | 1.2 | 3394 | 1064 | 2.60 |
| | 1.4 | 3219 | 1092 | 2.67 |
| | 1.6 | 3060 | 1121 | 2.74 |
| | 1.8 | 2887 | 1148 | 2.81 |
| | 2.0 | 2721 | 1176 | 2.88 |
| T5 | 0.2 | - | - | - |
| | 0.4 | - | - | - |
| | 0.6 | 4221 | 1022 | 2.85 |
| | 0.8 | 4047 | 1052 | 2.93 |
| | 1.0 | 3889 | 1084 | 3.02 |
| | 1.2 | 3734 | 1109 | 3.09 |
| | 1.4 | 3555 | 1133 | 3.16 |
| | 1.6 | 3396 | 1162 | 3.24 |
| | 1.8 | 3210 | 1186 | 3.30 |
| | 2.0 | 3041 | 1211 | 3.37 |
| T6** | 0.2 | 2464 | 612 | 0.68 |
| | 0.4 | 2329 | 675 | 0.75 |
| | 0.6 | 2215 | 727 | 0.80 |
| | 0.8 | 2022 | 778 | 0.86 |
| | 1.0 | - | - | - |
| | 1.2 | - | - | - |
| | 1.4 | - | - | - |
| | 1.6 | - | - | - |
| | 1.8 | - | - | - |
| | 2.0 | - | - | - |

| Horizontal Flow | | | | |
|---|---|---|---|---|
| Speed Tap | ESP | CFM | RPM | BHP |
| T1** | 0.2 | 2029 | 440 | 0.31 |
| | 0.4 | 1855 | 519 | 0.37 |
| | 0.6 | - | - | - |
| | 0.8 | - | - | - |
| | 1.0 | - | - | - |
| | 1.2 | - | - | - |
| | 1.4 | - | - | - |
| | 1.6 | - | - | - |
| | 1.8 | - | - | - |
| | 2.0 | - | - | - |
| T2** | 0.2 | 4061 | 675 | 1.37 |
| | 0.4 | 3919 | 720 | 1.46 |
| | 0.6 | 3792 | 761 | 1.54 |
| | 0.8 | 3610 | 802 | 1.62 |
| | 1.0 | 3427 | 845 | 1.71 |
| | 1.2 | 3261 | 894 | 1.81 |
| | 1.4 | 3042 | 919 | 1.86 |
| | 1.6 | 2865 | 962 | 1.95 |
| | 1.8 | 2649 | 1020 | 2.06 |
| | 2.0 | 2487 | 1041 | 2.11 |
| T3 | 0.2 | 3391 | 593 | 0.88 |
| | 0.4 | 3245 | 641 | 0.95 |
| | 0.6 | 3095 | 693 | 1.03 |
| | 0.8 | 2948 | 739 | 1.10 |
| | 1.0 | 2789 | 789 | 1.17 |
| | 1.2 | 2614 | 847 | 1.26 |
| | 1.4 | - | - | - |
| | 1.6 | - | - | - |
| | 1.8 | - | - | - |
| | 2.0 | - | - | - |
| T4 | 0.2 | - | - | - |
| | 0.4 | - | - | - |
| | 0.6 | - | - | - |
| | 0.8 | 4051 | 849 | 2.08 |
| | 1.0 | 3857 | 885 | 2.17 |
| | 1.2 | 3718 | 922 | 2.25 |
| | 1.4 | 3536 | 957 | 2.34 |
| | 1.6 | 3369 | 993 | 2.43 |
| | 1.8 | 3199 | 1028 | 2.52 |
| | 2.0 | 3048 | 1064 | 2.60 |
| T5 | 0.2 | - | - | - |
| | 0.4 | - | - | - |
| | 0.6 | - | - | - |
| | 0.8 | - | - | - |
| | 1.0 | - | - | - |
| | 1.2 | 4145 | 950 | 2.65 |
| | 1.4 | 3925 | 986 | 2.75 |
| | 1.6 | 3783 | 1018 | 2.84 |
| | 1.8 | 3606 | 1051 | 2.93 |
| | 2.0 | 3415 | 1085 | 3.02 |
| T6** | 0.2 | 2719 | 539 | 0.60 |
| | 0.4 | 2590 | 584 | 0.64 |
| | 0.6 | 2444 | 638 | 0.70 |
| | 0.8 | 2221 | 699 | 0.77 |
| | 1.0 | 1930 | 759 | 0.84 |
| | 1.2 | - | - | - |
| | 1.4 | - | - | - |
| | 1.6 | - | - | - |
| | 1.8 | - | - | - |
| | 2.0 | - | - | - |

shaded speed tap - Gas heating airflow.
**(T1) (T2) and (T6)(T7) are part load only.

**8.5 Ton • 180 MBH Gas Heat Exchanger • High Static Direct Drive**
**Models: DHG1023WM, DHG1024WM, DHG1027WM**

| Down Flow | | | | |
|---|---|---|---|---|
| Speed Tap | ESP | CFM | RPM | BHP |
| T7** | 0.2 | 3302 | 768 | 1.35 |
| | 0.4 | 3209 | 847 | 1.49 |
| | 0.6 | 3103 | 851 | 1.50 |
| | 0.8 | 2979 | 886 | 1.56 |
| | 1.0 | 2840 | 930 | 1.64 |
| | 1.2 | 2696 | 964 | 1.70 |
| | 1.4 | 2513 | 1027 | 1.81 |
| | 1.6 | 2312 | 1039 | 1.83 |
| | 1.8 | 2123 | 1102 | 1.94 |
| | 2.0 | 1895 | 1155 | 2.03 |
| T8 | 0.2 | 3392 | 853 | 1.57 |
| | 0.4 | 3298 | 852 | 1.57 |
| | 0.6 | 3191 | 864 | 1.59 |
| | 0.8 | 3066 | 864 | 1.59 |
| | 1.0 | 2933 | 915 | 1.68 |
| | 1.2 | 2790 | 975 | 1.79 |
| | 1.4 | 2620 | 1002 | 1.84 |
| | 1.6 | - | - | - |
| | 1.8 | - | - | - |
| | 2.0 | - | - | - |
| T9 | 0.2 | 3912 | 757 | 1.75 |
| | 0.4 | 3808 | 816 | 1.89 |
| | 0.6 | 3689 | 927 | 2.15 |
| | 0.8 | 3562 | 984 | 2.28 |
| | 1.0 | 3447 | 1012 | 2.35 |
| | 1.2 | 3312 | 1042 | 2.41 |
| | 1.4 | 3185 | 1075 | 2.49 |
| | 1.6 | 3063 | 1106 | 2.56 |
| | 1.8 | 2903 | 1126 | 2.61 |
| | 2.0 | 2773 | 1181 | 2.74 |
| T10 | 0.2 | 4380 | 941 | 2.62 |
| | 0.4 | 4256 | 977 | 2.72 |
| | 0.6 | 4126 | 1012 | 2.82 |
| | 0.8 | 3991 | 1046 | 2.91 |
| | 1.0 | 3867 | 1078 | 3.00 |
| | 1.2 | 3743 | 1109 | 3.09 |
| | 1.4 | 3606 | 1138 | 3.17 |
| | 1.6 | 3474 | 1165 | 3.25 |
| | 1.8 | 3340 | 1193 | 3.32 |
| | 2.0 | 3204 | 1219 | 3.40 |

| Horizontal Flow | | | | |
|---|---|---|---|---|
| Speed Tap | ESP | CFM | RPM | BHP |
| T7** | 0.2 | 3734 | 626 | 1.10 |
| | 0.4 | 3574 | 679 | 1.20 |
| | 0.6 | 3431 | 729 | 1.28 |
| | 0.8 | 3283 | 775 | 1.37 |
| | 1.0 | 3115 | 817 | 1.44 |
| | 1.2 | 2941 | 865 | 1.52 |
| | 1.4 | 2747 | 908 | 1.60 |
| | 1.6 | 2425 | 958 | 1.69 |
| | 1.8 | 2211 | 1011 | 1.78 |
| | 2.0 | 1860 | 1086 | 1.91 |
| T8 | 0.2 | 3835 | 638 | 1.17 |
| | 0.4 | 3695 | 691 | 1.27 |
| | 0.6 | 3544 | 739 | 1.36 |
| | 0.8 | 3402 | 784 | 1.44 |
| | 1.0 | 3228 | 826 | 1.52 |
| | 1.2 | 3034 | 870 | 1.60 |
| | 1.4 | 2840 | 920 | 1.69 |
| | 1.6 | 2615 | 962 | 1.77 |
| | 1.8 | - | - | - |
| | 2.0 | - | - | - |
| T9 | 0.2 | 4388 | 712 | 1.65 |
| | 0.4 | 4245 | 751 | 1.74 |
| | 0.6 | 4081 | 792 | 1.84 |
| | 0.8 | 3940 | 837 | 1.94 |
| | 1.0 | 3734 | 875 | 2.03 |
| | 1.2 | 3539 | 910 | 2.11 |
| | 1.4 | 3317 | 953 | 2.21 |
| | 1.6 | 3092 | 995 | 2.31 |
| | 1.8 | 2880 | 1030 | 2.39 |
| | 2.0 | 2653 | 1068 | 2.48 |
| T10 | 0.2 | 4802 | 776 | 2.16 |
| | 0.4 | 4695 | 811 | 2.26 |
| | 0.6 | 4585 | 847 | 2.36 |
| | 0.8 | 4462 | 883 | 2.46 |
| | 1.0 | 4315 | 922 | 2.57 |
| | 1.2 | 4153 | 952 | 2.65 |
| | 1.4 | 3975 | 989 | 2.76 |
| | 1.6 | 3767 | 1022 | 2.85 |
| | 1.8 | 3581 | 1060 | 2.95 |
| | 2.0 | 3370 | 1096 | 3.05 |

shaded speed tap - Gas heating airflow.
**(T1) (T2) and (T6)(T7) are part load only.

**8.5 Ton • 225 MBH Gas Heat Exchanger • Standard Static Direct Drive**
**Models: DHG1023DH, DHG1024DH, DHG1027DH**

| Down Flow | | | | |
|---|---|---|---|---|
| Speed Tap | ESP | CFM | RPM | BHP |
| T1** | 0.2 | 1902 | 520 | 0.37 |
| | 0.4 | - | - | - |
| | 0.6 | - | - | - |
| | 0.8 | - | - | - |
| T2** | 0.2 | 2365 | 599 | 0.61 |
| | 0.4 | 2208 | 649 | 0.66 |
| | 0.6 | 2048 | 695 | 0.70 |
| | 0.8 | 1892 | 736 | 0.74 |
| T3 | 0.2 | 3026 | 709 | 1.06 |
| | 0.4 | 2905 | 748 | 1.11 |
| | 0.6 | 2735 | 788 | 1.17 |
| | 0.8 | 2593 | 831 | 1.24 |
| T4 | 0.2 | 3522 | 795 | 1.51 |
| | 0.4 | 3389 | 828 | 1.58 |
| | 0.6 | 3240 | 865 | 1.65 |
| | 0.8 | 3083 | 898 | 1.71 |
| T5 | 0.2 | 3830 | 847 | 1.83 |
| | 0.4 | 3702 | 881 | 1.90 |
| | 0.6 | 3563 | 915 | 1.97 |
| | 0.8 | 3399 | 946 | 2.04 |
| T6** | 0.2 | 2024 | 546 | 0.44 |
| | 0.4 | 1928 | 606 | 0.48 |
| | 0.6 | - | - | - |
| | 0.8 | - | - | - |
| T7** | 0.2 | 2398 | 602 | 0.64 |
| | 0.4 | 2270 | 665 | 0.70 |
| | 0.6 | 2161 | 719 | 0.76 |
| | 0.8 | 1948 | 774 | 0.82 |
| T8 | 0.2 | 2774 | 663 | 0.88 |
| | 0.4 | 2615 | 722 | 0.95 |
| | 0.6 | 2471 | 763 | 1.01 |
| | 0.8 | - | - | - |
| T9 | 0.2 | 2988 | 703 | 1.04 |
| | 0.4 | 2829 | 756 | 1.12 |
| | 0.6 | 2697 | 792 | 1.17 |
| | 0.8 | 2583 | 835 | 1.24 |
| T10 | 0.2 | 3182 | 743 | 1.22 |
| | 0.4 | 3041 | 788 | 1.30 |
| | 0.6 | 2953 | 821 | 1.35 |
| | 0.8 | 2797 | 868 | 1.43 |

| Horizontal Flow | | | | |
|---|---|---|---|---|
| Speed Tap | ESP | CFM | RPM | BHP |
| T1** | 0.2 | 2029 | 440 | 0.31 |
| | 0.4 | - | - | - |
| | 0.6 | - | - | - |
| | 0.8 | - | - | - |
| T2** | 0.2 | 2671 | 503 | 0.51 |
| | 0.4 | 2492 | 568 | 0.57 |
| | 0.6 | 2335 | 628 | 0.64 |
| | 0.8 | 2027 | 690 | 0.70 |
| T3 | 0.2 | 3391 | 593 | 0.88 |
| | 0.4 | 3245 | 641 | 0.95 |
| | 0.6 | 3095 | 693 | 1.03 |
| | 0.8 | 2948 | 739 | 1.10 |
| T4 | 0.2 | 3921 | 655 | 1.25 |
| | 0.4 | 3775 | 700 | 1.33 |
| | 0.6 | 3630 | 745 | 1.42 |
| | 0.8 | 3449 | 786 | 1.50 |
| T5 | 0.2 | 4210 | 694 | 1.49 |
| | 0.4 | 4071 | 737 | 1.59 |
| | 0.6 | 3942 | 777 | 1.67 |
| | 0.8 | 3746 | 819 | 1.76 |
| T6** | 0.2 | 2216 | 459 | 0.37 |
| | 0.4 | 2066 | 533 | 0.43 |
| | 0.6 | 1894 | 599 | 0.48 |
| | 0.8 | - | - | - |
| T7** | 0.2 | 2645 | 528 | 0.56 |
| | 0.4 | 2515 | 577 | 0.61 |
| | 0.6 | 2360 | 634 | 0.67 |
| | 0.8 | 2137 | 694 | 0.74 |
| T8 | 0.2 | 3116 | 575 | 0.76 |
| | 0.4 | 2944 | 616 | 0.81 |
| | 0.6 | 2782 | 666 | 0.88 |
| | 0.8 | 2582 | 722 | 0.95 |
| T9 | 0.2 | 3410 | 589 | 0.87 |
| | 0.4 | 3193 | 640 | 0.95 |
| | 0.6 | 2993 | 690 | 1.02 |
| | 0.8 | 2823 | 740 | 1.10 |
| T10 | 0.2 | 3655 | 604 | 0.99 |
| | 0.4 | 3427 | 663 | 1.09 |
| | 0.6 | 3210 | 714 | 1.17 |
| | 0.8 | 3066 | 759 | 1.25 |

shaded speed tap - Gas heating airflow.
**(T1) (T2) and (T6)(T7) are part load only.

**8.5 Ton • 225 MBH Gas Heat Exchanger • Medium Static Direct Drive**
**Models: DHG1023LH, DHG1024LH, DHG1027LH**

| Down Flow | | | | |
|---|---|---|---|---|
| Speed Tap | ESP | CFM | RPM | BHP |
| T1** | 0.2 | 1863 | 520 | 0.37 |
| | 0.4 | - | - | - |
| | 0.6 | - | - | - |
| | 0.8 | - | - | - |
| | 1.0 | - | - | - |
| | 1.2 | - | - | - |
| | 1.4 | - | - | - |
| T2** | 0.2 | 3114 | 722 | 1.12 |
| | 0.4 | 2977 | 761 | 1.18 |
| | 0.6 | 2825 | 800 | 1.24 |
| | 0.8 | 2634 | 846 | 1.31 |
| | 1.0 | 2474 | 878 | 1.36 |
| | 1.2 | 2236 | 931 | 1.44 |
| | 1.4 | 1990 | 986 | 1.53 |
| T3 | 0.2 | 3026 | 709 | 1.06 |
| | 0.4 | 2905 | 748 | 1.11 |
| | 0.6 | 2735 | 788 | 1.17 |
| | 0.8 | 2593 | 831 | 1.24 |
| | 1.0 | - | - | - |
| | 1.2 | - | - | - |
| | 1.4 | - | - | - |
| T4 | 0.2 | 3997 | 874 | 1.99 |
| | 0.4 | 3869 | 909 | 2.07 |
| | 0.6 | 3740 | 942 | 2.14 |
| | 0.8 | 3578 | 975 | 2.22 |
| | 1.0 | 3417 | 1009 | 2.29 |
| | 1.2 | 3257 | 1039 | 2.36 |
| | 1.4 | 3091 | 1069 | 2.43 |
| T5 | 0.2 | - | - | - |
| | 0.4 | 4125 | 958 | 2.46 |
| | 0.6 | 3997 | 992 | 2.55 |
| | 0.8 | 3806 | 1021 | 2.63 |
| | 1.0 | 3701 | 1056 | 2.72 |
| | 1.2 | 3547 | 1081 | 2.78 |
| | 1.4 | 3374 | 1101 | 2.83 |
| T6** | 0.2 | 2202 | 572 | 0.53 |
| | 0.4 | 2098 | 636 | 0.59 |
| | 0.6 | 1969 | 698 | 0.65 |
| | 0.8 | - | - | - |
| | 1.0 | - | - | - |
| | 1.2 | - | - | - |
| | 1.4 | - | - | - |
| T7** | 0.2 | 2948 | 681 | 0.97 |
| | 0.4 | 2729 | 741 | 1.06 |
| | 0.6 | 2574 | 789 | 1.13 |
| | 0.8 | 2447 | 824 | 1.18 |
| | 1.0 | 2310 | 847 | 1.21 |
| | 1.2 | 2126 | 857 | 1.22 |
| | 1.4 | 1858 | 948 | 1.35 |
| T8 | 0.2 | 3256 | 760 | 1.30 |
| | 0.4 | 3128 | 802 | 1.37 |
| | 0.6 | 3059 | 834 | 1.42 |
| | 0.8 | 2885 | 884 | 1.51 |
| | 1.0 | 2779 | 916 | 1.6 |
| | 1.2 | 2619 | 955 | 1.63 |
| | 1.4 | 2449 | 1000 | 1.71 |
| T9 | 0.2 | 3571 | 777 | 1.55 |
| | 0.4 | 3475 | 815 | 1.63 |
| | 0.6 | 3364 | 887 | 1.77 |
| | 0.8 | 3239 | 920 | 1.84 |
| | 1.0 | 3115 | 957 | 1.91 |
| | 1.2 | 2974 | 997 | 2.00 |
| | 1.4 | 2825 | 1031 | 2.06 |
| T10 | 0.2 | 3879 | 753 | 1.72 |
| | 0.4 | 3777 | 802 | 1.83 |
| | 0.6 | 3658 | 923 | 2.11 |
| | 0.8 | 3532 | 980 | 2.24 |
| | 1.0 | 3416 | 1008 | 2.30 |
| | 1.2 | 3280 | 1038 | 2.37 |
| | 1.4 | 3152 | 1071 | 2.45 |

| Horizontal Flow | | | | |
|---|---|---|---|---|
| Speed Tap | ESP | CFM | RPM | BHP |
| T1** | 0.2 | 2029 | 440 | 0.31 |
| | 0.4 | 1855 | 519 | 0.37 |
| | 0.6 | - | - | - |
| | 0.8 | - | - | - |
| | 1.0 | - | - | - |
| | 1.2 | - | - | - |
| | 1.4 | - | - | - |
| T2** | 0.2 | 3458 | 603 | 0.93 |
| | 0.4 | 3292 | 658 | 1.02 |
| | 0.6 | 3155 | 700 | 1.08 |
| | 0.8 | 3007 | 747 | 1.16 |
| | 1.0 | 2844 | 797 | 1.23 |
| | 1.2 | 2681 | 836 | 1.29 |
| | 1.4 | 2469 | 885 | 1.37 |
| T3 | 0.2 | 3391 | 593 | 0.88 |
| | 0.4 | 3245 | 641 | 0.95 |
| | 0.6 | 3095 | 693 | 1.03 |
| | 0.8 | 2948 | 739 | 1.10 |
| | 1.0 | 2789 | 789 | 1.17 |
| | 1.2 | 2614 | 847 | 1.26 |
| | 1.4 | - | - | - |
| T4 | 0.2 | - | - | - |
| | 0.4 | 4200 | 754 | 1.71 |
| | 0.6 | 4070 | 791 | 1.80 |
| | 0.8 | 3879 | 838 | 1.91 |
| | 1.0 | 3699 | 874 | 1.99 |
| | 1.2 | 3535 | 923 | 2.10 |
| | 1.4 | 3341 | 946 | 2.15 |
| T5 | 0.2 | - | - | - |
| | 0.4 | - | - | - |
| | 0.6 | - | - | - |
| | 0.8 | 4194 | 863 | 2.22 |
| | 1.0 | 4012 | 898 | 2.31 |
| | 1.2 | 3879 | 955 | 2.45 |
| | 1.4 | 3683 | 967 | 2.49 |
| T6** | 0.2 | 2455 | 488 | 0.45 |
| | 0.4 | 2291 | 558 | 0.52 |
| | 0.6 | 2105 | 618 | 0.57 |
| | 0.8 | 1842 | 688 | 0.64 |
| | 1.0 | - | - | - |
| | 1.2 | - | - | - |
| | 1.4 | - | - | - |
| T7** | 0.2 | - | - | - |
| | 0.4 | 3123 | 632 | 0.90 |
| | 0.6 | 2931 | 681 | 0.97 |
| | 0.8 | 2767 | 734 | 1.05 |
| | 1.0 | 2539 | 781 | 1.12 |
| | 1.2 | 2280 | 837 | 1.20 |
| | 1.4 | 2083 | 892 | 1.27 |
| T8 | 0.2 | 3734 | 613 | 1.05 |
| | 0.4 | 3520 | 673 | 1.15 |
| | 0.6 | 3311 | 723 | 1.24 |
| | 0.8 | 3172 | 767 | 1.31 |
| | 1.0 | 2951 | 811 | 1.39 |
| | 1.2 | 2724 | 859 | 1.47 |
| | 1.4 | 2547 | 909 | 1.55 |
| T9 | 0.2 | 3992 | 669 | 1.34 |
| | 0.4 | 3881 | 710 | 1.42 |
| | 0.6 | 3776 | 756 | 1.51 |
| | 0.8 | 3631 | 804 | 1.61 |
| | 1.0 | 3474 | 841 | 1.68 |
| | 1.2 | 3329 | 884 | 1.77 |
| | 1.4 | 3125 | 928 | 1.86 |
| T10 | 0.2 | - | - | - |
| | 0.4 | - | - | - |
| | 0.6 | 4054 | 789 | 1.80 |
| | 0.8 | 3912 | 834 | 1.91 |
| | 1.0 | 3711 | 872 | 1.99 |
| | 1.2 | 3501 | 907 | 2.07 |
| | 1.4 | 2986 | 951 | 2.17 |

shaded speed tap - Gas heating airflow.
**(T1) (T2) and (T6)(T7) are part load only.

**8.5 Ton • 225 MBH Gas Heat Exchanger • High Static Direct Drive**
**Models: DHG1023WH, DHG1024WH, DHG1027WH**

| Down Flow | | | | |
|---|---|---|---|---|
| Speed Tap | ESP | CFM | RPM | BHP |
| T1** | 0.2 | 1863 | 520 | 0.37 |
| | 0.4 | - | - | - |
| | 0.6 | - | - | - |
| | 0.8 | - | - | - |
| | 1.0 | - | - | - |
| | 1.2 | - | - | - |
| | 1.4 | - | - | - |
| | 1.6 | - | - | - |
| | 1.8 | - | - | - |
| | 2.0 | - | - | - |
| T2** | 0.2 | 3674 | 820 | 1.66 |
| | 0.4 | 3544 | 853 | 1.73 |
| | 0.6 | 3402 | 889 | 1.80 |
| | 0.8 | 3235 | 920 | 1.86 |
| | 1.0 | 3055 | 956 | 1.94 |
| | 1.2 | 2891 | 986 | 2.00 |
| | 1.4 | 2708 | 1011 | 2.05 |
| | 1.6 | 2499 | 1071 | 2.17 |
| | 1.8 | 2307 | 1103 | 2.23 |
| | 2.0 | 2054 | 1146 | 2.32 |
| T3 | 0.2 | 3026 | 709 | 1.06 |
| | 0.4 | 2905 | 748 | 1.11 |
| | 0.6 | 2735 | 788 | 1.17 |
| | 0.8 | 2593 | 831 | 1.24 |
| | 1.0 | - | - | - |
| | 1.2 | - | - | - |
| | 1.4 | - | - | - |
| | 1.6 | - | - | - |
| | 1.8 | - | - | - |
| | 2.0 | - | - | - |
| T4 | 0.2 | 4166 | 907 | 2.22 |
| | 0.4 | 4029 | 939 | 2.30 |
| | 0.6 | 3906 | 969 | 2.37 |
| | 0.8 | 3717 | 1003 | 2.45 |
| | 1.0 | 3544 | 1037 | 2.54 |
| | 1.2 | 3394 | 1064 | 2.60 |
| | 1.4 | 3219 | 1092 | 2.67 |
| | 1.6 | 3060 | 1121 | 2.74 |
| | 1.8 | 2887 | 1148 | 2.81 |
| | 2.0 | 2721 | 1176 | 2.88 |
| T5 | 0.2 | - | - | - |
| | 0.4 | - | - | - |
| | 0.6 | 4221 | 1022 | 2.85 |
| | 0.8 | 4047 | 1052 | 2.93 |
| | 1.0 | 3889 | 1084 | 3.02 |
| | 1.2 | 3734 | 1109 | 3.09 |
| | 1.4 | 3555 | 1133 | 3.16 |
| | 1.6 | 3396 | 1162 | 3.24 |
| | 1.8 | 3210 | 1186 | 3.30 |
| | 2.0 | 3041 | 1211 | 3.37 |
| T6** | 0.2 | 2522 | 621 | 0.71 |
| | 0.4 | 2381 | 684 | 0.78 |
| | 0.6 | 2261 | 733 | 0.84 |
| | 0.8 | 2087 | 783 | 0.89 |
| | 1.0 | - | - | - |
| | 1.2 | - | - | - |
| | 1.4 | - | - | - |
| | 1.6 | - | - | - |
| | 1.8 | - | - | - |
| | 2.0 | - | - | - |

| Horizontal Flow | | | | |
|---|---|---|---|---|
| Speed Tap | ESP | CFM | RPM | BHP |
| T1** | 0.2 | 2029 | 440 | 0.31 |
| | 0.4 | 1855 | 519 | 0.37 |
| | 0.6 | - | - | - |
| | 0.8 | - | - | - |
| | 1.0 | - | - | - |
| | 1.2 | - | - | - |
| | 1.4 | - | - | - |
| | 1.6 | - | - | - |
| | 1.8 | - | - | - |
| | 2.0 | - | - | - |
| T2** | 0.2 | 4061 | 675 | 1.37 |
| | 0.4 | 3919 | 720 | 1.46 |
| | 0.6 | 3792 | 761 | 1.54 |
| | 0.8 | 3610 | 802 | 1.62 |
| | 1.0 | 3427 | 845 | 1.71 |
| | 1.2 | 3261 | 894 | 1.81 |
| | 1.4 | 3042 | 919 | 1.86 |
| | 1.6 | 2865 | 962 | 1.95 |
| | 1.8 | 2649 | 1020 | 2.06 |
| | 2.0 | 2487 | 1041 | 2.11 |
| T3 | 0.2 | 3391 | 593 | 0.88 |
| | 0.4 | 3245 | 641 | 0.95 |
| | 0.6 | 3095 | 693 | 1.03 |
| | 0.8 | 2948 | 739 | 1.10 |
| | 1.0 | 2789 | 789 | 1.17 |
| | 1.2 | 2614 | 847 | 1.26 |
| | 1.4 | - | - | - |
| | 1.6 | - | - | - |
| | 1.8 | - | - | - |
| | 2.0 | - | - | - |
| T4 | 0.2 | - | - | - |
| | 0.4 | - | - | - |
| | 0.6 | - | - | - |
| | 0.8 | 4051 | 849 | 2.08 |
| | 1.0 | 3857 | 885 | 2.17 |
| | 1.2 | 3718 | 922 | 2.25 |
| | 1.4 | 3536 | 957 | 2.34 |
| | 1.6 | 3369 | 993 | 2.43 |
| | 1.8 | 3199 | 1028 | 2.52 |
| | 2.0 | 3048 | 1064 | 2.60 |
| T5 | 0.2 | - | - | - |
| | 0.4 | - | - | - |
| | 0.6 | - | - | - |
| | 0.8 | - | - | - |
| | 1.0 | - | - | - |
| | 1.2 | 4145 | 950 | 2.65 |
| | 1.4 | 3925 | 986 | 2.75 |
| | 1.6 | 3783 | 1018 | 2.84 |
| | 1.8 | 3606 | 1051 | 2.93 |
| | 2.0 | 3415 | 1085 | 3.02 |
| T6** | 0.2 | 2787 | 548 | 0.63 |
| | 0.4 | 2656 | 590 | 0.67 |
| | 0.6 | 2514 | 643 | 0.73 |
| | 0.8 | 2292 | 703 | 0.80 |
| | 1.0 | 2032 | 762 | 0.87 |
| | 1.2 | - | - | - |
| | 1.4 | - | - | - |
| | 1.6 | - | - | - |
| | 1.8 | - | - | - |
| | 2.0 | - | - | - |

shaded speed tap - Gas heating airflow.
**(T1) (T2) and (T6)(T7) are part load only.

**8.5 Ton • 225 MBH Gas Heat Exchanger • High Static Direct Drive**
**Models: DHG1023WH, DHG1024WH, DHG1027WH**

| Down Flow | | | | |
|---|---|---|---|---|
| Speed Tap | ESP | CFM | RPM | BHP |
| T7** | 0.2 | - | - | - |
| | 0.4 | - | - | - |
| | 0.6 | 3103 | 851 | 1.50 |
| | 0.8 | 2979 | 886 | 1.56 |
| | 1.0 | 2840 | 930 | 1.64 |
| | 1.2 | 2696 | 964 | 1.70 |
| | 1.4 | 2513 | 1027 | 1.81 |
| | 1.6 | 2312 | 1039 | 1.83 |
| | 1.8 | 2123 | 1102 | 1.94 |
| | 2.0 | 1895 | 1155 | 2.03 |
| T8 | 0.2 | 3531 | 789 | 1.55 |
| | 0.4 | 3436 | 825 | 1.62 |
| | 0.6 | 3325 | 882 | 1.73 |
| | 0.8 | 3201 | 910 | 1.79 |
| | 1.0 | 3075 | 948 | 1.86 |
| | 1.2 | 2934 | 992 | 1.95 |
| | 1.4 | 2780 | 1025 | 2.01 |
| | 1.6 | 2620 | 1063 | 2.09 |
| | 1.8 | 2441 | 1111 | 2.18 |
| | 2.0 | - | - | - |
| T9 | 0.2 | 3999 | 765 | 1.82 |
| | 0.4 | 3878 | 856 | 2.04 |
| | 0.6 | 3755 | 928 | 2.21 |
| | 0.8 | 3630 | 990 | 2.36 |
| | 1.0 | 3505 | 1020 | 2.43 |
| | 1.2 | 3378 | 1051 | 2.50 |
| | 1.4 | 3246 | 1083 | 2.58 |
| | 1.6 | 3113 | 1114 | 2.65 |
| | 1.8 | 2981 | 1138 | 2.71 |
| | 2.0 | 2846 | 1172 | 2.79 |
| T10 | 0.2 | - | - | - |
| | 0.4 | - | - | - |
| | 0.6 | 4126 | 1012 | 2.82 |
| | 0.8 | 3991 | 1046 | 2.91 |
| | 1.0 | 3867 | 1078 | 3.00 |
| | 1.2 | 3743 | 1109 | 3.09 |
| | 1.4 | 3606 | 1138 | 3.17 |
| | 1.6 | 3474 | 1165 | 3.25 |
| | 1.8 | 3340 | 1193 | 3.32 |
| | 2.0 | 3204 | 1219 | 3.40 |

| Horizontal Flow | | | | |
|---|---|---|---|---|
| Speed Tap | ESP | CFM | RPM | BHP |
| T7** | 0.2 | - | - | - |
| | 0.4 | - | - | - |
| | 0.6 | - | - | - |
| | 0.8 | - | - | - |
| | 1.0 | 3115 | 817 | 1.44 |
| | 1.2 | 2941 | 865 | 1.52 |
| | 1.4 | 2747 | 908 | 1.60 |
| | 1.6 | 2425 | 958 | 1.69 |
| | 1.8 | 2211 | 1011 | 1.78 |
| | 2.0 | 1860 | 1086 | 1.91 |
| T8 | 0.2 | 3949 | 663 | 1.30 |
| | 0.4 | 3837 | 705 | 1.39 |
| | 0.6 | 3733 | 752 | 1.48 |
| | 0.8 | 3588 | 800 | 1.57 |
| | 1.0 | 3433 | 837 | 1.65 |
| | 1.2 | 3129 | 881 | 1.73 |
| | 1.4 | 3097 | 925 | 1.82 |
| | 1.6 | 2817 | 970 | 1.90 |
| | 1.8 | 2577 | 1016 | 2.00 |
| | 2.0 | - | - | - |
| T9 | 0.2 | - | - | - |
| | 0.4 | - | - | - |
| | 0.6 | 4157 | 801 | 1.91 |
| | 0.8 | 4013 | 842 | 2.01 |
| | 1.0 | 3816 | 885 | 2.11 |
| | 1.2 | 3618 | 913 | 2.17 |
| | 1.4 | 3417 | 958 | 2.28 |
| | 1.6 | 3179 | 997 | 2.37 |
| | 1.8 | 2971 | 1036 | 2.47 |
| | 2.0 | 2740 | 1075 | 2.56 |
| T10 | 0.2 | - | - | - |
| | 0.4 | - | - | - |
| | 0.6 | - | - | - |
| | 0.8 | - | - | - |
| | 1.0 | - | - | - |
| | 1.2 | 4153 | 952 | 2.65 |
| | 1.4 | 3975 | 989 | 2.76 |
| | 1.6 | 3767 | 1022 | 2.85 |
| | 1.8 | 3581 | 1060 | 2.95 |
| | 2.0 | 3370 | 1096 | 3.05 |

shaded speed tap - Gas heating airflow.
**(T1) (T2) and (T6)(T7) are part load only.

**10 Ton • 130 MBH Gas Heat Exchanger • Standard Static Direct Drive**
**Models: DHG1203DL, DHG1204DL, DHG1207DL**

| Down Flow | | | | |
|---|---|---|---|---|
| Speed Tap | ESP | CFM | RPM | BHP |
| T1** | 0.2 | 2255 | 553 | 0.42 |
| | 0.4 | - | - | - |
| | 0.6 | - | - | - |
| | 0.8 | - | - | - |
| T2** | 0.2 | 2910 | 654 | 0.78 |
| | 0.4 | 2702 | 687 | 0.82 |
| | 0.6 | 2410 | 753 | 0.90 |
| | 0.8 | 2250 | 827 | 0.98 |
| T3 | 0.2 | 3293 | 675 | 1.04 |
| | 0.4 | 3137 | 725 | 1.12 |
| | 0.6 | 3010 | 766 | 1.19 |
| | 0.8 | - | - | - |
| T4 | 0.2 | 3940 | 774 | 1.62 |
| | 0.4 | 3827 | 812 | 1.70 |
| | 0.6 | 3696 | 850 | 1.78 |
| | 0.8 | 3571 | 892 | 1.87 |
| T5 | 0.2 | 4126 | 802 | 1.82 |
| | 0.4 | 4022 | 838 | 1.91 |
| | 0.6 | 3889 | 877 | 1.99 |
| | 0.8 | 3808 | 908 | 2.07 |
| T6** | 0.2 | 1756 | 460 | 0.24 |
| | 0.4 | 1547 | 535 | 0.29 |
| | 0.6 | 1338 | 599 | 0.34 |
| | 0.8 | - | - | - |
| T7** | 0.2 | 2111 | 508 | 0.38 |
| | 0.4 | 1917 | 575 | 0.43 |
| | 0.6 | 1742 | 634 | 0.48 |
| | 0.8 | 1585 | 688 | 0.52 |
| T8 | 0.2 | 2443 | 554 | 0.53 |
| | 0.4 | 2264 | 612 | 0.58 |
| | 0.6 | 2109 | 669 | 0.64 |
| | 0.8 | - | - | - |
| T9 | 0.2 | 3440 | 692 | 1.12 |
| | 0.4 | 3308 | 734 | 1.19 |
| | 0.6 | 3158 | 782 | 1.27 |
| | 0.8 | 3012 | 827 | 1.34 |
| T10 | 0.2 | 3575 | 710 | 1.23 |
| | 0.4 | 3469 | 749 | 1.29 |
| | 0.6 | 3293 | 798 | 1.38 |
| | 0.8 | 3170 | 840 | 1.45 |

| Horizontal Flow | | | | |
|---|---|---|---|---|
| Speed Tap | ESP | CFM | RPM | BHP |
| T1** | 0.2 | 2267 | 492 | 0.37 |
| | 0.4 | - | - | - |
| | 0.6 | - | - | - |
| | 0.8 | - | - | - |
| T2** | 0.2 | 2942 | 562 | 0.67 |
| | 0.4 | 2760 | 613 | 0.73 |
| | 0.6 | 2431 | 706 | 0.84 |
| | 0.8 | 2350 | 802 | 0.95 |
| T3 | 0.2 | 3464 | 626 | 0.97 |
| | 0.4 | 3294 | 683 | 1.06 |
| | 0.6 | 3139 | 730 | 1.13 |
| | 0.8 | - | - | - |
| T4 | 0.2 | 4159 | 707 | 1.48 |
| | 0.4 | 4062 | 742 | 1.56 |
| | 0.6 | 3880 | 794 | 1.66 |
| | 0.8 | 3722 | 844 | 1.77 |
| T5 | 0.2 | 4366 | 732 | 1.66 |
| | 0.4 | 4177 | 786 | 1.79 |
| | 0.6 | 4097 | 817 | 1.86 |
| | 0.8 | 3973 | 854 | 1.94 |
| T6** | 0.2 | 1853 | 430 | 0.24 |
| | 0.4 | 1379 | 522 | 0.29 |
| | 0.6 | 1363 | 845 | 0.47 |
| | 0.8 | - | - | - |
| T7** | 0.2 | 2222 | 470 | 0.36 |
| | 0.4 | 1895 | 550 | 0.42 |
| | 0.6 | 1755 | 611 | 0.46 |
| | 0.8 | 1510 | 726 | 0.55 |
| T8 | 0.2 | 2574 | 509 | 0.48 |
| | 0.4 | 2344 | 577 | 0.55 |
| | 0.6 | 2128 | 654 | 0.62 |
| | 0.8 | 1856 | 738 | 0.70 |
| T9 | 0.2 | 3639 | 629 | 1.02 |
| | 0.4 | 3491 | 672 | 1.09 |
| | 0.6 | 3267 | 768 | 1.24 |
| | 0.8 | 3045 | 789 | 1.28 |
| T10 | 0.2 | 3794 | 646 | 1.12 |
| | 0.4 | 3620 | 688 | 1.19 |
| | 0.6 | 3421 | 745 | 1.29 |
| | 0.8 | 3224 | 800 | 1.38 |

shaded speed tap - Gas heating airflow.
**(T1) (T2) and (T6)(T7) are part load only.

**10 Ton • 130 MBH Gas Heat Exchanger • Medium Static Direct Drive**
**Models: DHG1203LL, DHG1204LL, DHG1207LL**

| Down Flow | | | | |
|---|---|---|---|---|
| Speed Tap | ESP | CFM | RPM | BHP |
| T1** | 0.2 | 2255 | 553 | 0.42 |
| | 0.4 | - | - | - |
| | 0.6 | - | - | - |
| | 0.8 | - | - | - |
| | 1.0 | - | - | - |
| | 1.2 | - | - | - |
| | 1.4 | - | - | - |
| T2** | 0.2 | 3293 | 675 | 1.04 |
| | 0.4 | 3137 | 725 | 1.12 |
| | 0.6 | 3010 | 766 | 1.19 |
| | 0.8 | 2781 | 825 | 1.28 |
| | 1.0 | 2580 | 876 | 1.36 |
| | 1.2 | 2426 | 913 | 1.41 |
| | 1.4 | 2241 | 954 | 1.48 |
| T3 | 0.2 | 3293 | 675 | 1.04 |
| | 0.4 | 3137 | 725 | 1.12 |
| | 0.6 | 3010 | 766 | 1.19 |
| | 0.8 | - | - | - |
| | 1.0 | - | - | - |
| | 1.2 | - | - | - |
| | 1.4 | - | - | - |
| T4 | 0.2 | 4426 | 847 | 2.17 |
| | 0.4 | 4311 | 880 | 2.25 |
| | 0.6 | 4180 | 916 | 2.34 |
| | 0.8 | 4102 | 944 | 2.42 |
| | 1.0 | 3957 | 982 | 2.51 |
| | 1.2 | 3858 | 1013 | 2.59 |
| | 1.4 | 3742 | 1047 | 2.68 |
| T5 | 0.2 | 4628 | 878 | 2.45 |
| | 0.4 | 4516 | 912 | 2.54 |
| | 0.6 | 4402 | 945 | 2.63 |
| | 0.8 | 4295 | 978 | 2.72 |
| | 1.0 | 4186 | 1011 | 2.82 |
| | 1.2 | 4076 | 1042 | 2.90 |
| | 1.4 | 3969 | 1073 | 2.99 |
| T6** | 0.2 | 1955 | 487 | 0.32 |
| | 0.4 | 1755 | 557 | 0.36 |
| | 0.6 | 1567 | 619 | 0.41 |
| | 0.8 | - | - | - |
| | 1.0 | - | - | - |
| | 1.2 | - | - | - |
| | 1.4 | - | - | - |
| T7** | 0.2 | 2628 | 581 | 0.62 |
| | 0.4 | 2464 | 636 | 0.68 |
| | 0.6 | 2300 | 691 | 0.74 |
| | 0.8 | 2136 | 745 | 0.80 |
| | 1.0 | 1972 | 800 | 0.86 |
| | 1.2 | 1807 | 855 | 0.92 |
| | 1.4 | 1643 | 910 | 0.97 |
| T8 | 0.2 | 2691 | 588 | 0.65 |
| | 0.4 | 2523 | 641 | 0.71 |
| | 0.6 | 2376 | 696 | 0.77 |
| | 0.8 | 2017 | 782 | 0.86 |
| | 1.0 | - | - | - |
| | 1.2 | - | - | - |
| | 1.4 | - | - | - |
| T9 | 0.2 | 3575 | 710 | 1.23 |
| | 0.4 | 3469 | 749 | 1.29 |
| | 0.6 | 3293 | 798 | 1.38 |
| | 0.8 | 3170 | 840 | 1.45 |
| | 1.0 | 3046 | 880 | 1.52 |
| | 1.2 | 2786 | 939 | 1.62 |
| | 1.4 | 2545 | 995 | 1.72 |
| T10 | 0.2 | 3848 | 750 | 1.46 |
| | 0.4 | 3737 | 790 | 1.54 |
| | 0.6 | 3579 | 833 | 1.62 |
| | 0.8 | 3471 | 872 | 1.70 |
| | 1.0 | 3357 | 912 | 1.78 |
| | 1.2 | 3145 | 958 | 1.87 |
| | 1.4 | 2952 | 1009 | 1.97 |

| Horizontal Flow | | | | |
|---|---|---|---|---|
| Speed Tap | ESP | CFM | RPM | BHP |
| T1** | 0.2 | 2267 | 492 | 0.37 |
| | 0.4 | - | - | - |
| | 0.6 | - | - | - |
| | 0.8 | - | - | - |
| | 1.0 | - | - | - |
| | 1.2 | - | - | - |
| | 1.4 | - | - | - |
| T2** | 0.2 | 3464 | 626 | 0.97 |
| | 0.4 | 3294 | 683 | 1.06 |
| | 0.6 | 3139 | 730 | 1.13 |
| | 0.8 | 2859 | 807 | 1.25 |
| | 1.0 | 2544 | 884 | 1.37 |
| | 1.2 | 2387 | 920 | 1.42 |
| | 1.4 | 2208 | 963 | 1.49 |
| T3 | 0.2 | 3464 | 626 | 0.97 |
| | 0.4 | 3294 | 683 | 1.06 |
| | 0.6 | 3139 | 730 | 1.13 |
| | 0.8 | - | - | - |
| | 1.0 | - | - | - |
| | 1.2 | - | - | - |
| | 1.4 | - | - | - |
| T4 | 0.2 | 4671 | 773 | 1.98 |
| | 0.4 | 4596 | 820 | 2.10 |
| | 0.6 | 4420 | 854 | 2.19 |
| | 0.8 | 4250 | 894 | 2.29 |
| | 1.0 | 4119 | 928 | 2.38 |
| | 1.2 | 3987 | 960 | 2.46 |
| | 1.4 | 3873 | 1008 | 2.58 |
| T5 | 0.2 | 4896 | 802 | 2.23 |
| | 0.4 | 4771 | 839 | 2.34 |
| | 0.6 | 4646 | 878 | 2.45 |
| | 0.8 | 4510 | 915 | 2.55 |
| | 1.0 | 4378 | 950 | 2.65 |
| | 1.2 | 4242 | 992 | 2.76 |
| | 1.4 | 4093 | 1035 | 2.88 |
| T6** | 0.2 | 2060 | 453 | 0.30 |
| | 0.4 | 1674 | 537 | 0.36 |
| | 0.6 | 1582 | 627 | 0.42 |
| | 0.8 | 1359 | 721 | 0.48 |
| | 1.0 | - | - | - |
| | 1.2 | - | - | - |
| | 1.4 | - | - | - |
| T7** | 0.2 | 2741 | 534 | 0.57 |
| | 0.4 | 2519 | 599 | 0.64 |
| | 0.6 | 2296 | 665 | 0.71 |
| | 0.8 | 2074 | 731 | 0.78 |
| | 1.0 | 1852 | 797 | 0.85 |
| | 1.2 | 1629 | 863 | 0.92 |
| | 1.4 | 1407 | 929 | 1.00 |
| T8 | 0.2 | 2834 | 538 | 0.59 |
| | 0.4 | 2651 | 599 | 0.66 |
| | 0.6 | 2405 | 806 | 0.89 |
| | 0.8 | 2128 | 748 | 0.83 |
| | 1.0 | - | - | - |
| | 1.2 | - | - | - |
| | 1.4 | - | - | - |
| T9 | 0.2 | 3794 | 646 | 1.12 |
| | 0.4 | 3620 | 688 | 1.19 |
| | 0.6 | 3421 | 745 | 1.29 |
| | 0.8 | 3224 | 800 | 1.38 |
| | 1.0 | 3047 | 854 | 1.47 |
| | 1.2 | 2743 | 927 | 1.60 |
| | 1.4 | 2406 | 998 | 1.72 |
| T10 | 0.2 | - | - | - |
| | 0.4 | - | - | - |
| | 0.6 | 3752 | 817 | 1.59 |
| | 0.8 | 3588 | 820 | 1.60 |
| | 1.0 | 3437 | 871 | 1.70 |
| | 1.2 | 3191 | 941 | 1.83 |
| | 1.4 | 2911 | 970 | 1.89 |

shaded speed tap - Gas heating airflow.
**(T1) (T2) and (T6)(T7) are part load only.

**10 Ton • 130 MBH Gas Heat Exchanger • High Static Direct Drive**
**Models: DHG1203WL, DHG1204WL, DHG1207WL**

| Down Flow | | | | |
|---|---|---|---|---|
| Speed Tap | ESP | CFM | RPM | BHP |
| T1** | 0.2 | 2248 | 535 | 0.44 |
| | 0.4 | - | - | - |
| | 0.6 | - | - | - |
| | 0.8 | - | - | - |
| | 1.0 | - | - | - |
| | 1.2 | - | - | - |
| | 1.4 | - | - | - |
| | 1.6 | - | - | - |
| | 1.8 | - | - | - |
| | 2.0 | - | - | - |
| T2** | 0.2 | 3814 | 761 | 1.35 |
| | 0.4 | 3709 | 802 | 1.42 |
| | 0.6 | 3534 | 839 | 1.49 |
| | 0.8 | 3399 | 887 | 1.57 |
| | 1.0 | 3265 | 919 | 1.63 |
| | 1.2 | 3012 | 967 | 1.72 |
| | 1.4 | 2779 | 1027 | 1.82 |
| | 1.6 | 2643 | 1042 | 1.85 |
| | 1.8 | 2509 | 1060 | 1.88 |
| | 2.0 | 2383 | 1120 | 1.99 |
| T3 | 0.2 | 3814 | 761 | 1.35 |
| | 0.4 | 3709 | 802 | 1.42 |
| | 0.6 | 3534 | 839 | 1.49 |
| | 0.8 | 3399 | 887 | 1.57 |
| | 1.0 | 3265 | 919 | 1.63 |
| | 1.2 | 3012 | 967 | 1.72 |
| | 1.4 | - | - | - |
| | 1.6 | - | - | - |
| | 1.8 | - | - | - |
| | 2.0 | - | - | - |
| T4 | 0.2 | 4790 | 914 | 2.55 |
| | 0.4 | 4674 | 948 | 2.64 |
| | 0.6 | 4565 | 982 | 2.74 |
| | 0.8 | 4440 | 1013 | 2.82 |
| | 1.0 | 4321 | 1046 | 2.91 |
| | 1.2 | 4211 | 1076 | 3.00 |
| | 1.4 | 4094 | 1104 | 3.08 |
| | 1.6 | 3988 | 1135 | 3.16 |
| | 1.8 | 3884 | 1163 | 3.24 |
| | 2.0 | 3770 | 1192 | 3.32 |
| T5 | 0.2 | 4976 | 948 | 2.83 |
| | 0.4 | 4866 | 979 | 2.93 |
| | 0.6 | 4763 | 1010 | 3.02 |
| | 0.8 | 4634 | 1040 | 3.11 |
| | 1.0 | 4520 | 1071 | 3.20 |
| | 1.2 | 4408 | 1099 | 3.28 |
| | 1.4 | 4288 | 1128 | 3.37 |
| | 1.6 | 4187 | 1157 | 3.46 |
| | 1.8 | 4078 | 1182 | 3.53 |
| | 2.0 | 3976 | 1214 | 3.63 |
| T6** | 0.2 | 2306 | 543 | 0.46 |
| | 0.4 | 2069 | 595 | 0.50 |
| | 0.6 | 1774 | 631 | 0.53 |
| | 0.8 | 1416 | 649 | 0.55 |
| | 1.0 | - | - | - |
| | 1.2 | - | - | - |
| | 1.4 | - | - | - |
| | 1.6 | - | - | - |
| | 1.8 | - | - | - |
| | 2.0 | - | - | - |

| Horizontal Flow | | | | |
|---|---|---|---|---|
| Speed Tap | ESP | CFM | RPM | BHP |
| T1** | 0.2 | 2312 | 493 | 0.40 |
| | 0.4 | - | - | - |
| | 0.6 | - | - | - |
| | 0.8 | - | - | - |
| | 1.0 | - | - | - |
| | 1.2 | - | - | - |
| | 1.4 | - | - | - |
| | 1.6 | - | - | - |
| | 1.8 | - | - | - |
| | 2.0 | - | - | - |
| T2** | 0.2 | 3815 | 680 | 1.21 |
| | 0.4 | 3705 | 721 | 1.28 |
| | 0.6 | 3514 | 777 | 1.38 |
| | 0.8 | 3367 | 823 | 1.46 |
| | 1.0 | 3222 | 867 | 1.54 |
| | 1.2 | 2937 | 938 | 1.66 |
| | 1.4 | 2670 | 1004 | 1.78 |
| | 1.6 | 2522 | 1040 | 1.84 |
| | 1.8 | 2375 | 1072 | 1.90 |
| | 2.0 | 2222 | 1107 | 1.96 |
| T3 | 0.2 | 3815 | 680 | 1.21 |
| | 0.4 | 3705 | 721 | 1.28 |
| | 0.6 | 3514 | 777 | 1.38 |
| | 0.8 | 3367 | 823 | 1.46 |
| | 1.0 | 3222 | 867 | 1.54 |
| | 1.2 | - | - | - |
| | 1.4 | - | - | - |
| | 1.6 | - | - | - |
| | 1.8 | - | - | - |
| | 2.0 | - | - | - |
| T4 | 0.2 | 4915 | 830 | 2.31 |
| | 0.4 | 4789 | 872 | 2.43 |
| | 0.6 | 4659 | 905 | 2.52 |
| | 0.8 | 4533 | 959 | 2.67 |
| | 1.0 | 4420 | 980 | 2.73 |
| | 1.2 | 4278 | 1050 | 2.93 |
| | 1.4 | 4139 | 1055 | 2.94 |
| | 1.6 | 4024 | 1145 | 3.19 |
| | 1.8 | 3892 | 1125 | 3.13 |
| | 2.0 | 3778 | 1150 | 3.20 |
| T5 | 0.2 | - | - | - |
| | 0.4 | 4972 | 891 | 2.66 |
| | 0.6 | 4843 | 925 | 2.76 |
| | 0.8 | 4720 | 964 | 2.88 |
| | 1.0 | 4607 | 1002 | 2.99 |
| | 1.2 | 4471 | 1036 | 3.09 |
| | 1.4 | 4338 | 1070 | 3.20 |
| | 1.6 | 4223 | 1105 | 3.30 |
| | 1.8 | 4095 | 1140 | 3.41 |
| | 2.0 | 3983 | 1170 | 3.50 |
| T6** | 0.2 | 2376 | 500 | 0.42 |
| | 0.4 | 2175 | 571 | 0.48 |
| | 0.6 | 2024 | 657 | 0.56 |
| | 0.8 | 1884 | 689 | 0.58 |
| | 1.0 | - | - | - |
| | 1.2 | - | - | - |
| | 1.4 | - | - | - |
| | 1.6 | - | - | - |
| | 1.8 | - | - | - |
| | 2.0 | - | - | - |

shaded speed tap - Gas heating airflow.
**(T1) (T2) and (T6)(T7) are part load only.

**10 Ton • 130 MBH Gas Heat Exchanger • High Static Direct Drive**
**Models: DHG1203WL, DHG1204WL, DHG1207WL**

| Down Flow | | | | |
|---|---|---|---|---|
| Speed Tap | ESP | CFM | RPM | BHP |
| T7** | 0.2 | - | - | - |
| | 0.4 | - | - | - |
| | 0.6 | 2830 | 761 | 1.05 |
| | 0.8 | 2693 | 809 | 1.12 |
| | 1.0 | 2457 | 864 | 1.19 |
| | 1.2 | 2219 | 921 | 1.27 |
| | 1.4 | 1937 | 970 | 1.34 |
| | 1.6 | 1778 | 1006 | 1.39 |
| | 1.8 | 1574 | 1055 | 1.45 |
| | 2.0 | 1365 | 1149 | 1.58 |
| T8 | 0.2 | 3229 | 678 | 0.97 |
| | 0.4 | 3107 | 723 | 1.03 |
| | 0.6 | 2907 | 770 | 1.10 |
| | 0.8 | 2778 | 816 | 1.17 |
| | 1.0 | 2557 | 869 | 1.24 |
| | 1.2 | 2308 | 925 | 1.32 |
| | 1.4 | 2032 | 976 | 1.39 |
| | 1.6 | - | - | - |
| | 1.8 | - | - | - |
| | 2.0 | - | - | - |
| T9 | 0.2 | 3706 | 750 | 1.34 |
| | 0.4 | 3596 | 786 | 1.40 |
| | 0.6 | 3413 | 835 | 1.49 |
| | 0.8 | 3273 | 874 | 1.56 |
| | 1.0 | 3132 | 913 | 1.63 |
| | 1.2 | 2874 | 973 | 1.74 |
| | 1.4 | 2641 | 1027 | 1.83 |
| | 1.6 | 2501 | 1063 | 1.90 |
| | 1.8 | 2366 | 1097 | 1.96 |
| | 2.0 | 2226 | 1129 | 2.02 |
| T10 | 0.2 | - | - | - |
| | 0.4 | 3836 | 832 | 1.68 |
| | 0.6 | 3714 | 873 | 1.77 |
| | 0.8 | 3576 | 905 | 1.83 |
| | 1.0 | 3432 | 948 | 1.92 |
| | 1.2 | 3323 | 986 | 2.00 |
| | 1.4 | 3177 | 1020 | 2.06 |
| | 1.6 | 2956 | 1075 | 2.18 |
| | 1.8 | 2690 | 1127 | 2.28 |
| | 2.0 | 2560 | 1156 | 2.34 |

| Horizontal Flow | | | | |
|---|---|---|---|---|
| Speed Tap | ESP | CFM | RPM | BHP |
| T7** | 0.2 | - | - | - |
| | 0.4 | - | - | - |
| | 0.6 | - | - | - |
| | 0.8 | 2759 | 766 | 1.06 |
| | 1.0 | 2540 | 834 | 1.15 |
| | 1.2 | 2250 | 898 | 1.24 |
| | 1.4 | 1983 | 958 | 1.32 |
| | 1.6 | 1840 | 1013 | 1.40 |
| | 1.8 | 1627 | 1073 | 1.48 |
| | 2.0 | 1413 | 1132 | 1.56 |
| T8 | 0.2 | 3335 | 613 | 0.87 |
| | 0.4 | 3188 | 668 | 0.95 |
| | 0.6 | 3021 | 720 | 1.03 |
| | 0.8 | 2855 | 770 | 1.10 |
| | 1.0 | 2641 | 836 | 1.19 |
| | 1.2 | 2345 | 902 | 1.29 |
| | 1.4 | 2073 | 963 | 1.38 |
| | 1.6 | - | - | - |
| | 1.8 | - | - | - |
| | 2.0 | - | - | - |
| T9 | 0.2 | 3819 | 670 | 1.20 |
| | 0.4 | 3711 | 712 | 1.27 |
| | 0.6 | 3519 | 770 | 1.38 |
| | 0.8 | 3377 | 821 | 1.47 |
| | 1.0 | 3230 | 870 | 1.55 |
| | 1.2 | 2945 | 944 | 1.69 |
| | 1.4 | 2687 | 1015 | 1.81 |
| | 1.6 | 2525 | 1055 | 1.88 |
| | 1.8 | 2361 | 1089 | 1.94 |
| | 2.0 | 2232 | 1128 | 2.01 |
| T10 | 0.2 | - | - | - |
| | 0.4 | - | - | - |
| | 0.6 | 3841 | 805 | 1.63 |
| | 0.8 | 3710 | 845 | 1.71 |
| | 1.0 | 3546 | 895 | 1.81 |
| | 1.2 | 3410 | 941 | 1.91 |
| | 1.4 | 3285 | 980 | 1.98 |
| | 1.6 | 3028 | 1045 | 2.12 |
| | 1.8 | 2732 | 1110 | 2.25 |
| | 2.0 | 2549 | 1152 | 2.33 |

shaded speed tap - Gas heating airflow.
**(T1) (T2) and (T6)(T7) are part load only.

**10 Ton • 180 MBH Gas Heat Exchanger • Standard Static Direct Drive**
**Models: DHG1203DM, DHG1204DM, DHG1207DM**

| Down Flow | | | | |
|---|---|---|---|---|
| Speed Tap | ESP | CFM | RPM | BHP |
| T1** | 0.2 | 2184 | 520 | 0.43 |
| | 0.4 | - | - | - |
| | 0.6 | - | - | - |
| | 0.8 | - | - | - |
| T2** | 0.2 | 2910 | 654 | 0.78 |
| | 0.4 | 2702 | 687 | 0.82 |
| | 0.6 | 2410 | 753 | 0.90 |
| | 0.8 | 2250 | 792 | 0.94 |
| T3 | 0.2 | 3669 | 734 | 1.36 |
| | 0.4 | 3556 | 775 | 1.44 |
| | 0.6 | 3428 | 816 | 1.52 |
| | 0.8 | 3274 | 859 | 1.60 |
| T4 | 0.2 | 3940 | 774 | 1.62 |
| | 0.4 | 3827 | 812 | 1.70 |
| | 0.6 | 3696 | 850 | 1.78 |
| | 0.8 | 3571 | 892 | 1.87 |
| T5 | 0.2 | 4126 | 802 | 1.82 |
| | 0.4 | 4022 | 838 | 1.91 |
| | 0.6 | 3889 | 877 | 1.99 |
| | 0.8 | 3808 | 908 | 2.07 |
| T6** | 0.2 | 1938 | 485 | 0.31 |
| | 0.4 | - | - | - |
| | 0.6 | - | - | - |
| | 0.8 | - | - | - |
| T7** | 0.2 | 2621 | 582 | 0.62 |
| | 0.4 | 2465 | 637 | 0.68 |
| | 0.6 | 2300 | 690 | 0.74 |
| | 0.8 | 2136 | 745 | 0.80 |
| T8 | 0.2 | 2731 | 593 | 0.67 |
| | 0.4 | 2564 | 646 | 0.73 |
| | 0.6 | - | - | - |
| | 0.8 | - | - | - |
| T9 | 0.2 | 3555 | 708 | 1.21 |
| | 0.4 | 3428 | 749 | 1.28 |
| | 0.6 | 3275 | 796 | 1.36 |
| | 0.8 | 3145 | 838 | 1.43 |
| T10 | 0.2 | 4200 | 800 | 1.82 |
| | 0.4 | 4081 | 842 | 1.91 |
| | 0.6 | 3956 | 882 | 2.01 |
| | 0.8 | 3855 | 919 | 2.09 |

| Horizontal Flow | | | | |
|---|---|---|---|---|
| Speed Tap | ESP | CFM | RPM | BHP |
| T1** | 0.2 | 2286 | 486 | 0.41 |
| | 0.4 | - | - | - |
| | 0.6 | - | - | - |
| | 0.8 | - | - | - |
| T2** | 0.2 | 2942 | 562 | 0.67 |
| | 0.4 | 2760 | 613 | 0.73 |
| | 0.6 | 2431 | 706 | 0.84 |
| | 0.8 | 2350 | 802 | 0.95 |
| T3 | 0.2 | 3874 | 673 | 1.25 |
| | 0.4 | 3699 | 713 | 1.32 |
| | 0.6 | 3560 | 769 | 1.43 |
| | 0.8 | 3438 | 820 | 1.52 |
| T4 | 0.2 | 4159 | 707 | 1.48 |
| | 0.4 | 4062 | 742 | 1.56 |
| | 0.6 | 3880 | 794 | 1.66 |
| | 0.8 | 3722 | 844 | 1.77 |
| T5 | 0.2 | 4366 | 732 | 1.66 |
| | 0.4 | 4177 | 786 | 1.79 |
| | 0.6 | 4097 | 817 | 1.86 |
| | 0.8 | 3973 | 854 | 1.94 |
| T6** | 0.2 | 2042 | 451 | 0.30 |
| | 0.4 | - | - | - |
| | 0.6 | - | - | - |
| | 0.8 | - | - | - |
| T7** | 0.2 | 2751 | 534 | 0.57 |
| | 0.4 | 2525 | 595 | 0.64 |
| | 0.6 | 2291 | 668 | 0.71 |
| | 0.8 | 2074 | 731 | 0.78 |
| T8 | 0.2 | 2876 | 543 | 0.61 |
| | 0.4 | 2699 | 602 | 0.68 |
| | 0.6 | 2450 | 657 | 0.74 |
| | 0.8 | - | - | - |
| T9 | 0.2 | 3765 | 643 | 1.10 |
| | 0.4 | 3610 | 684 | 1.17 |
| | 0.6 | 3402 | 681 | 1.16 |
| | 0.8 | 3195 | 797 | 1.36 |
| T10 | 0.2 | 4468 | 726 | 1.65 |
| | 0.4 | 4258 | 766 | 1.74 |
| | 0.6 | 4175 | 811 | 1.84 |
| | 0.8 | 4056 | 851 | 1.93 |

shaded speed tap - Gas heating airflow.
**(T1) (T2) and (T6)(T7) are part load only.

**10 Ton • 180 MBH Gas Heat Exchanger • Medium Static Direct Drive**
**Models: DHG1203LM, DHG1204LM, DHG1207LM**

| Down Flow | | | | |
|---|---|---|---|---|
| Speed Tap | ESP | CFM | RPM | BHP |
| T1** | 0.2 | 2184 | 520 | 0.43 |
| | 0.4 | - | - | - |
| | 0.6 | - | - | - |
| | 0.8 | - | - | - |
| | 1.0 | - | - | - |
| | 1.2 | - | - | - |
| | 1.4 | - | - | - |
| T2** | 0.2 | 3293 | 675 | 1.04 |
| | 0.4 | 3137 | 725 | 1.12 |
| | 0.6 | 3010 | 766 | 1.19 |
| | 0.8 | 2781 | 825 | 1.28 |
| | 1.0 | 2580 | 876 | 1.36 |
| | 1.2 | 2426 | 913 | 1.41 |
| | 1.4 | 2241 | 954 | 1.48 |
| T3 | 0.2 | 3669 | 734 | 1.36 |
| | 0.4 | 3556 | 775 | 1.44 |
| | 0.6 | 3428 | 816 | 1.52 |
| | 0.8 | 3274 | 859 | 1.60 |
| | 1.0 | 3171 | 892 | 1.66 |
| | 1.2 | - | - | - |
| | 1.4 | - | - | - |
| T4 | 0.2 | 4426 | 847 | 2.17 |
| | 0.4 | 4311 | 880 | 2.25 |
| | 0.6 | 4180 | 916 | 2.34 |
| | 0.8 | 4102 | 944 | 2.42 |
| | 1.0 | 3957 | 982 | 2.51 |
| | 1.2 | 3858 | 1013 | 2.59 |
| | 1.4 | 3742 | 1047 | 2.68 |
| T5 | 0.2 | 4628 | 878 | 2.45 |
| | 0.4 | 4516 | 912 | 2.54 |
| | 0.6 | 4402 | 945 | 2.63 |
| | 0.8 | 4295 | 978 | 2.72 |
| | 1.0 | 4186 | 1011 | 2.82 |
| | 1.2 | 4076 | 1042 | 2.90 |
| | 1.4 | 3969 | 1073 | 2.99 |
| T6** | 0.2 | 2516 | 564 | 0.56 |
| | 0.4 | 2340 | 621 | 0.62 |
| | 0.6 | 2188 | 677 | 0.67 |
| | 0.8 | - | - | - |
| | 1.0 | - | - | - |
| | 1.2 | - | - | - |
| | 1.4 | - | - | - |
| T7** | 0.2 | 3329 | 682 | 1.08 |
| | 0.4 | 3186 | 728 | 1.15 |
| | 0.6 | 3056 | 770 | 1.22 |
| | 0.8 | 2852 | 823 | 1.30 |
| | 1.0 | 2679 | 876 | 1.38 |
| | 1.2 | 2500 | 911 | 1.44 |
| | 1.4 | 2290 | 959 | 1.51 |
| T8 | 0.2 | 4018 | 786 | 1.70 |
| | 0.4 | 3911 | 823 | 1.78 |
| | 0.6 | 3776 | 862 | 1.87 |
| | 0.8 | 3674 | 899 | 1.95 |
| | 1.0 | 3529 | 973 | 2.1 |
| | 1.2 | 3391 | 975 | 2.11 |
| | 1.4 | 3222 | 1014 | 2.20 |
| T9 | 0.2 | 4343 | 835 | 2.07 |
| | 0.4 | 4237 | 869 | 2.16 |
| | 0.6 | 4109 | 905 | 2.25 |
| | 0.8 | 4022 | 938 | 2.33 |
| | 1.0 | 3530 | 973 | 2.41 |
| | 1.2 | 3771 | 1008 | 2.50 |
| | 1.4 | 3639 | 1038 | 2.57 |
| T10 | 0.2 | 4628 | 878 | 2.45 |
| | 0.4 | 4516 | 912 | 2.54 |
| | 0.6 | 4402 | 945 | 2.63 |
| | 0.8 | 4295 | 978 | 2.72 |
| | 1.0 | 4186 | 1011 | 2.82 |
| | 1.2 | 4076 | 1042 | 2.90 |
| | 1.4 | 3969 | 1073 | 2.99 |

| Horizontal Flow | | | | |
|---|---|---|---|---|
| Speed Tap | ESP | CFM | RPM | BHP |
| T1** | 0.2 | 2286 | 486 | 0.41 |
| | 0.4 | - | - | - |
| | 0.6 | - | - | - |
| | 0.8 | - | - | - |
| | 1.0 | - | - | - |
| | 1.2 | - | - | - |
| | 1.4 | - | - | - |
| T2** | 0.2 | 3464 | 626 | 0.97 |
| | 0.4 | 3294 | 683 | 1.06 |
| | 0.6 | 3139 | 730 | 1.13 |
| | 0.8 | 2859 | 807 | 1.25 |
| | 1.0 | 2544 | 884 | 1.37 |
| | 1.2 | 2387 | 920 | 1.42 |
| | 1.4 | 2208 | 963 | 1.49 |
| T3 | 0.2 | 3874 | 673 | 1.25 |
| | 0.4 | 3699 | 713 | 1.32 |
| | 0.6 | 3560 | 769 | 1.43 |
| | 0.8 | 3438 | 820 | 1.52 |
| | 1.0 | 3243 | 870 | 1.62 |
| | 1.2 | - | - | - |
| | 1.4 | - | - | - |
| T4 | 0.2 | 4671 | 773 | 1.98 |
| | 0.4 | 4596 | 820 | 2.10 |
| | 0.6 | 4420 | 854 | 2.19 |
| | 0.8 | 4250 | 894 | 2.29 |
| | 1.0 | 4119 | 928 | 2.38 |
| | 1.2 | 3987 | 960 | 2.46 |
| | 1.4 | 3873 | 1008 | 2.58 |
| T5 | 0.2 | 4896 | 802 | 2.23 |
| | 0.4 | 4771 | 839 | 2.34 |
| | 0.6 | 4646 | 878 | 2.45 |
| | 0.8 | 4510 | 915 | 2.55 |
| | 1.0 | 4378 | 950 | 2.65 |
| | 1.2 | 4242 | 992 | 2.76 |
| | 1.4 | 4093 | 1035 | 2.88 |
| T6** | 0.2 | 2648 | 517 | 0.51 |
| | 0.4 | 2434 | 583 | 0.58 |
| | 0.6 | 2208 | 647 | 0.64 |
| | 0.8 | 1933 | 741 | 0.74 |
| | 1.0 | - | - | - |
| | 1.2 | - | - | - |
| | 1.4 | - | - | - |
| T7** | 0.2 | 3582 | 622 | 0.98 |
| | 0.4 | 3436 | 666 | 1.05 |
| | 0.6 | 3206 | 812 | 1.28 |
| | 0.8 | 2978 | 785 | 1.24 |
| | 1.0 | 2769 | 842 | 1.33 |
| | 1.2 | 2454 | 913 | 1.44 |
| | 1.4 | 2144 | 957 | 1.51 |
| T8 | 0.2 | 4359 | 712 | 1.54 |
| | 0.4 | 4170 | 749 | 1.62 |
| | 0.6 | 4044 | 821 | 1.78 |
| | 0.8 | 3910 | 842 | 1.82 |
| | 1.0 | 3732 | 890 | 1.93 |
| | 1.2 | 3574 | 945 | 2.0 |
| | 1.4 | 3379 | 977 | 2.1 |
| T9 | 0.2 | 4707 | 754 | 1.87 |
| | 0.4 | 4534 | 792 | 1.97 |
| | 0.6 | 4425 | 828 | 2.05 |
| | 0.8 | 4306 | 877 | 2.18 |
| | 1.0 | 4102 | 919 | 2.28 |
| | 1.2 | 4026 | 954 | 2.37 |
| | 1.4 | 3925 | 995 | 2.47 |
| T10 | 0.2 | 5018 | 794 | 2.21 |
| | 0.4 | 4884 | 834 | 2.32 |
| | 0.6 | 4750 | 875 | 2.44 |
| | 0.8 | 4613 | 912 | 2.54 |
| | 1.0 | 4481 | 950 | 2.65 |
| | 1.2 | 4339 | 990 | 2.76 |
| | 1.4 | 4187 | 1030 | 2.87 |

shaded speed tap - Gas heating airflow.
**(T1) (T2) and (T6)(T7) are part load only.

**10 Ton • 180 MBH Gas Heat Exchanger • High Static Direct Drive**
**Models: DHG1203WM, DHG1204WM, DHG1207WM**

| Down Flow | | | | |
|---|---|---|---|---|
| Speed Tap | ESP | CFM | RPM | BHP |
| T1** | 0.2 | 2248 | 535 | 0.44 |
| | 0.4 | - | - | - |
| | 0.6 | - | - | - |
| | 0.8 | - | - | - |
| | 1.0 | - | - | - |
| | 1.2 | - | - | - |
| | 1.4 | - | - | - |
| | 1.6 | - | - | - |
| | 1.8 | - | - | - |
| | 2.0 | - | - | - |
| T2** | 0.2 | 3814 | 761 | 1.35 |
| | 0.4 | 3709 | 802 | 1.42 |
| | 0.6 | 3534 | 839 | 1.49 |
| | 0.8 | 3399 | 887 | 1.57 |
| | 1.0 | 3265 | 919 | 1.63 |
| | 1.2 | 3012 | 967 | 1.72 |
| | 1.4 | 2779 | 1027 | 1.82 |
| | 1.6 | 2643 | 1042 | 1.85 |
| | 1.8 | 2509 | 1060 | 1.88 |
| | 2.0 | 2383 | 1120 | 1.99 |
| T3 | 0.2 | 3814 | 761 | 1.35 |
| | 0.4 | 3709 | 802 | 1.42 |
| | 0.6 | 3534 | 839 | 1.49 |
| | 0.8 | 3399 | 887 | 1.57 |
| | 1.0 | 3265 | 919 | 1.63 |
| | 1.2 | 3012 | 967 | 1.72 |
| | 1.4 | - | - | - |
| | 1.6 | - | - | - |
| | 1.8 | - | - | - |
| | 2.0 | - | - | - |
| T4 | 0.2 | 4790 | 914 | 2.55 |
| | 0.4 | 4674 | 948 | 2.64 |
| | 0.6 | 4565 | 982 | 2.74 |
| | 0.8 | 4440 | 1013 | 2.82 |
| | 1.0 | 4321 | 1046 | 2.91 |
| | 1.2 | 4211 | 1076 | 3.00 |
| | 1.4 | 4094 | 1104 | 3.08 |
| | 1.6 | 3988 | 1135 | 3.16 |
| | 1.8 | 3884 | 1163 | 3.24 |
| | 2.0 | 3770 | 1192 | 3.32 |
| T5 | 0.2 | 4976 | 948 | 2.83 |
| | 0.4 | 4866 | 979 | 2.93 |
| | 0.6 | 4763 | 1010 | 3.02 |
| | 0.8 | 4634 | 1040 | 3.11 |
| | 1.0 | 4520 | 1071 | 3.20 |
| | 1.2 | 4408 | 1099 | 3.28 |
| | 1.4 | 4288 | 1128 | 3.37 |
| | 1.6 | 4187 | 1157 | 3.46 |
| | 1.8 | 4078 | 1182 | 3.53 |
| | 2.0 | 3976 | 1214 | 3.63 |
| T6** | 0.2 | 3493 | 718 | 1.16 |
| | 0.4 | 3374 | 758 | 1.23 |
| | 0.6 | 3189 | 805 | 1.30 |
| | 0.8 | 3053 | 847 | 1.37 |
| | 1.0 | 2899 | 890 | 1.44 |
| | 1.2 | 2628 | 949 | 1.54 |
| | 1.4 | 2393 | 1001 | 1.62 |
| | 1.6 | 2242 | 1050 | 1.70 |
| | 1.8 | 2059 | 1094 | 1.77 |
| | 2.0 | 1897 | 1131 | 1.83 |

| Horizontal Flow | | | | |
|---|---|---|---|---|
| Speed Tap | ESP | CFM | RPM | BHP |
| T1** | 0.2 | 2312 | 493 | 0.40 |
| | 0.4 | - | - | - |
| | 0.6 | - | - | - |
| | 0.8 | - | - | - |
| | 1.0 | - | - | - |
| | 1.2 | - | - | - |
| | 1.4 | - | - | - |
| | 1.6 | - | - | - |
| | 1.8 | - | - | - |
| | 2.0 | - | - | - |
| T2** | 0.2 | 3815 | 680 | 1.21 |
| | 0.4 | 3705 | 721 | 1.28 |
| | 0.6 | 3514 | 777 | 1.38 |
| | 0.8 | 3367 | 823 | 1.46 |
| | 1.0 | 3222 | 867 | 1.54 |
| | 1.2 | 2937 | 938 | 1.66 |
| | 1.4 | 2670 | 1004 | 1.78 |
| | 1.6 | 2522 | 1040 | 1.84 |
| | 1.8 | 2375 | 1072 | 1.90 |
| | 2.0 | 2222 | 1107 | 1.96 |
| T3 | 0.2 | 3815 | 680 | 1.21 |
| | 0.4 | 3705 | 721 | 1.28 |
| | 0.6 | 3514 | 777 | 1.38 |
| | 0.8 | 3367 | 823 | 1.46 |
| | 1.0 | 3222 | 867 | 1.54 |
| | 1.2 | - | - | - |
| | 1.4 | - | - | - |
| | 1.6 | - | - | - |
| | 1.8 | - | - | - |
| | 2.0 | - | - | - |
| T4 | 0.2 | 4915 | 830 | 2.31 |
| | 0.4 | 4789 | 872 | 2.43 |
| | 0.6 | 4659 | 905 | 2.52 |
| | 0.8 | 4533 | 959 | 2.67 |
| | 1.0 | 4420 | 980 | 2.73 |
| | 1.2 | 4278 | 1050 | 2.93 |
| | 1.4 | 4139 | 1055 | 2.94 |
| | 1.6 | 4024 | 1145 | 3.19 |
| | 1.8 | 3892 | 1125 | 3.13 |
| | 2.0 | 3778 | 1150 | 3.20 |
| T5 | 0.2 | - | - | - |
| | 0.4 | 4972 | 891 | 2.66 |
| | 0.6 | 4843 | 925 | 2.76 |
| | 0.8 | 4720 | 964 | 2.88 |
| | 1.0 | 4607 | 1002 | 2.99 |
| | 1.2 | 4471 | 1036 | 3.09 |
| | 1.4 | 4338 | 1070 | 3.20 |
| | 1.6 | 4223 | 1105 | 3.30 |
| | 1.8 | 4095 | 1140 | 3.41 |
| | 2.0 | 3983 | 1170 | 3.50 |
| T6** | 0.2 | 3603 | 644 | 1.04 |
| | 0.4 | 3478 | 693 | 1.12 |
| | 0.6 | 3301 | 750 | 1.21 |
| | 0.8 | 3171 | 791 | 1.28 |
| | 1.0 | 2993 | 853 | 1.38 |
| | 1.2 | 2691 | 919 | 1.49 |
| | 1.4 | 2418 | 988 | 1.60 |
| | 1.6 | 2278 | 1035 | 1.68 |
| | 1.8 | 2123 | 1070 | 1.73 |
| | 2.0 | 1933 | 1128 | 1.83 |

shaded speed tap - Gas heating airflow.
**(T1) (T2) and (T6)(T7) are part load only.

**10 Ton • 180 MBH Gas Heat Exchanger • High Static Direct Drive**
**Models: DHG1203WM, DHG1204WM, DHG1207WM**

| Down Flow | | | | |
|---|---|---|---|---|
| Speed Tap | ESP | CFM | RPM | BHP |
| T7** | 0.2 | 4026 | 791 | 1.57 |
| | 0.4 | 3913 | 831 | 1.65 |
| | 0.6 | 3757 | 870 | 1.73 |
| | 0.8 | 3628 | 912 | 1.81 |
| | 1.0 | 3496 | 946 | 1.88 |
| | 1.2 | 3294 | 988 | 1.96 |
| | 1.4 | 3104 | 1037 | 2.06 |
| | 1.6 | 2975 | 1060 | 2.11 |
| | 1.8 | 2855 | 1083 | 2.15 |
| | 2.0 | 2725 | 1130 | 2.25 |
| T8 | 0.2 | 4384 | 845 | 1.99 |
| | 0.4 | 4265 | 884 | 2.08 |
| | 0.6 | 4134 | 922 | 2.17 |
| | 0.8 | 4010 | 958 | 2.26 |
| | 1.0 | 3884 | 992 | 2.34 |
| | 1.2 | 3744 | 1027 | 2.42 |
| | 1.4 | 3604 | 1062 | 2.50 |
| | 1.6 | 3486 | 1092 | 2.57 |
| | 1.8 | 3381 | 1121 | 2.64 |
| | 2.0 | 3252 | 1154 | 2.72 |
| T9 | 0.2 | 4973 | 947 | 3.02 |
| | 0.4 | 4862 | 978 | 3.12 |
| | 0.6 | 4760 | 1010 | 3.22 |
| | 0.8 | 4629 | 1039 | 3.31 |
| | 1.0 | 4509 | 1067 | 3.40 |
| | 1.2 | 4402 | 1098 | 3.50 |
| | 1.4 | 4287 | 1128 | 3.60 |
| | 1.6 | 4181 | 1156 | 3.69 |
| | 1.8 | 4069 | 1184 | 3.78 |
| | 2.0 | 3972 | 1214 | 3.87 |
| T10 | 0.2 | - | - | - |
| | 0.4 | 5379 | 1069 | 4.11 |
| | 0.6 | 5276 | 1093 | 4.20 |
| | 0.8 | 5157 | 1107 | 4.26 |
| | 1.0 | 5049 | 1140 | 4.38 |
| | 1.2 | 4938 | 1164 | 4.47 |
| | 1.4 | 4824 | 1190 | 4.57 |
| | 1.6 | 4720 | 1219 | 4.68 |
| | 1.8 | 4609 | 1246 | 4.79 |
| | 2.0 | 4509 | 1273 | 4.89 |

| Horizontal Flow | | | | |
|---|---|---|---|---|
| Speed Tap | ESP | CFM | RPM | BHP |
| T7** | 0.2 | - | - | - |
| | 0.4 | 3920 | 745 | 1.48 |
| | 0.6 | 3770 | 792 | 1.57 |
| | 0.8 | 3640 | 844 | 1.68 |
| | 1.0 | 3485 | 889 | 1.77 |
| | 1.2 | 3319 | 948 | 1.88 |
| | 1.4 | 3206 | 1000 | 1.99 |
| | 1.6 | 2907 | 1053 | 2.09 |
| | 1.8 | 2667 | 1104 | 2.19 |
| | 2.0 | 2502 | 1138 | 2.26 |
| T8 | 0.2 | 4497 | 759 | 1.79 |
| | 0.4 | 4356 | 804 | 1.89 |
| | 0.6 | 4237 | 845 | 1.99 |
| | 0.8 | 4115 | 889 | 2.09 |
| | 1.0 | 3977 | 930 | 2.19 |
| | 1.2 | 3878 | 975 | 2.30 |
| | 1.4 | 3717 | 1015 | 2.39 |
| | 1.6 | 3536 | 1071 | 2.52 |
| | 1.8 | 3290 | 1117 | 2.63 |
| | 2.0 | 3024 | 1165 | 2.74 |
| T9 | 0.2 | 5130 | 839 | 2.60 |
| | 0.4 | 5013 | 884 | 2.74 |
| | 0.6 | 4877 | 916 | 2.84 |
| | 0.8 | 4774 | 956 | 2.96 |
| | 1.0 | 4665 | 991 | 3.07 |
| | 1.2 | 4527 | 1030 | 3.19 |
| | 1.4 | 4462 | 1073 | 3.33 |
| | 1.6 | 4301 | 1108 | 3.43 |
| | 1.8 | 4187 | 1154 | 3.58 |
| | 2.0 | 4105 | 1128 | 3.50 |
| T10 | 0.2 | - | - | - |
| | 0.4 | - | - | - |
| | 0.6 | - | - | - |
| | 0.8 | 5281 | 1019 | 3.92 |
| | 1.0 | 5155 | 1049 | 4.03 |
| | 1.2 | 5040 | 1083 | 4.16 |
| | 1.4 | 4940 | 1117 | 4.29 |
| | 1.6 | 4800 | 1148 | 4.41 |
| | 1.8 | 4678 | 1188 | 4.57 |
| | 2.0 | 4557 | 1209 | 4.65 |

shaded speed tap - Gas heating airflow.
**(T1) (T2) and (T6)(T7) are part load only.

**10 Ton • 240 MBH Gas Heat Exchanger • Standard Static Direct Drive**
**Models: DHG1203DH, DHG1204DH, DHG1207DH**

| Down Flow | | | | |
|---|---|---|---|---|
| Speed Tap | ESP | CFM | RPM | BHP |
| T1** | 0.2 | 2184 | 520 | 0.43 |
| | 0.4 | - | - | - |
| | 0.6 | - | - | - |
| | 0.8 | - | - | - |
| T2** | 0.2 | 2910 | 654 | 0.78 |
| | 0.4 | 2702 | 687 | 0.82 |
| | 0.6 | 2410 | 753 | 0.90 |
| | 0.8 | 2250 | 792 | 0.94 |
| T3 | 0.2 | 3669 | 734 | 1.36 |
| | 0.4 | 3556 | 775 | 1.44 |
| | 0.6 | 3428 | 816 | 1.52 |
| | 0.8 | 3274 | 859 | 1.60 |
| T4 | 0.2 | 3940 | 774 | 1.62 |
| | 0.4 | 3827 | 812 | 1.70 |
| | 0.6 | 3696 | 850 | 1.78 |
| | 0.8 | 3571 | 892 | 1.87 |
| T5 | 0.2 | 4126 | 802 | 1.82 |
| | 0.4 | 4022 | 838 | 1.91 |
| | 0.6 | 3889 | 877 | 1.99 |
| | 0.8 | 3808 | 908 | 2.07 |
| T6** | 0.2 | 2223 | 524 | 0.43 |
| | 0.4 | - | - | - |
| | 0.6 | - | - | - |
| | 0.8 | - | - | - |
| T7** | 0.2 | 3023 | 634 | 0.84 |
| | 0.4 | 2870 | 681 | 0.90 |
| | 0.6 | 2725 | 733 | 0.97 |
| | 0.8 | 2486 | 795 | 1.05 |
| T8 | 0.2 | 3720 | 732 | 1.35 |
| | 0.4 | 3602 | 772 | 1.42 |
| | 0.6 | 3446 | 817 | 1.50 |
| | 0.8 | 3331 | 857 | 1.58 |
| T9 | 0.2 | 3979 | 769 | 1.59 |
| | 0.4 | 3875 | 809 | 1.67 |
| | 0.6 | 3717 | 850 | 1.76 |
| | 0.8 | 3611 | 890 | 1.84 |
| T10 | 0.2 | 4200 | 800 | 1.82 |
| | 0.4 | 4081 | 842 | 1.91 |
| | 0.6 | 3956 | 882 | 2.01 |
| | 0.8 | 3855 | 919 | 2.09 |

| Horizontal Flow | | | | |
|---|---|---|---|---|
| Speed Tap | ESP | CFM | RPM | BHP |
| T1** | 0.2 | 2286 | 486 | 0.41 |
| | 0.4 | - | - | - |
| | 0.6 | - | - | - |
| | 0.8 | - | - | - |
| T2** | 0.2 | 2942 | 562 | 0.67 |
| | 0.4 | 2760 | 613 | 0.73 |
| | 0.6 | 2431 | 706 | 0.84 |
| | 0.8 | 2317 | 733 | 0.87 |
| T3 | 0.2 | 3874 | 673 | 1.25 |
| | 0.4 | 3699 | 713 | 1.32 |
| | 0.6 | 3560 | 769 | 1.43 |
| | 0.8 | 3438 | 820 | 1.52 |
| T4 | 0.2 | 4159 | 707 | 1.48 |
| | 0.4 | 4062 | 742 | 1.56 |
| | 0.6 | 3880 | 794 | 1.66 |
| | 0.8 | 3722 | 844 | 1.77 |
| T5 | 0.2 | 4366 | 732 | 1.66 |
| | 0.4 | 4177 | 786 | 1.79 |
| | 0.6 | 4097 | 817 | 1.86 |
| | 0.8 | 3973 | 854 | 1.94 |
| T6** | 0.2 | 2340 | 483 | 0.40 |
| | 0.4 | - | - | - |
| | 0.6 | - | - | - |
| | 0.8 | - | - | - |
| T7** | 0.2 | 3187 | 577 | 0.76 |
| | 0.4 | 3038 | 629 | 0.83 |
| | 0.6 | 2783 | 664 | 0.88 |
| | 0.8 | 2519 | 764 | 1.01 |
| T8 | 0.2 | 3947 | 664 | 1.22 |
| | 0.4 | 3781 | 703 | 1.29 |
| | 0.6 | 3599 | 816 | 1.50 |
| | 0.8 | 3416 | 1002 | 1.84 |
| T9 | 0.2 | 4237 | 698 | 1.44 |
| | 0.4 | 4053 | 734 | 1.52 |
| | 0.6 | 3912 | 819 | 1.69 |
| | 0.8 | 3765 | 831 | 1.72 |
| T10 | 0.2 | 4468 | 726 | 1.65 |
| | 0.4 | 4258 | 766 | 1.74 |
| | 0.6 | 4175 | 811 | 1.84 |
| | 0.8 | 4056 | 851 | 1.93 |

shaded speed tap - Gas heating airflow.
**(T1) (T2) and (T6)(T7) are part load only.

**10 Ton • 240 MBH Gas Heat Exchanger • Medium Static Direct Drive**
**Models: DHG1203LH, DHG1204LH, DHG1207LH**

| Down Flow | | | | |
|---|---|---|---|---|
| Speed Tap | ESP | CFM | RPM | BHP |
| T1** | 0.2 | 2184 | 520 | 0.43 |
| | 0.4 | - | - | - |
| | 0.6 | - | - | - |
| | 0.8 | - | - | - |
| | 1.0 | - | - | - |
| | 1.2 | - | - | - |
| | 1.4 | - | - | - |
| T2** | 0.2 | 3293 | 675 | 1.04 |
| | 0.4 | 3137 | 725 | 1.12 |
| | 0.6 | 3010 | 766 | 1.19 |
| | 0.8 | 2781 | 825 | 1.28 |
| | 1.0 | 2580 | 876 | 1.36 |
| | 1.2 | 2426 | 913 | 1.41 |
| | 1.4 | 2241 | 954 | 1.48 |
| T3 | 0.2 | 3669 | 734 | 1.36 |
| | 0.4 | 3556 | 775 | 1.44 |
| | 0.6 | 3428 | 816 | 1.52 |
| | 0.8 | 3274 | 859 | 1.60 |
| | 1.0 | 3171 | 892 | 1.66 |
| | 1.2 | - | - | - |
| | 1.4 | - | - | - |
| T4 | 0.2 | 4426 | 847 | 2.17 |
| | 0.4 | 4311 | 880 | 2.25 |
| | 0.6 | 4180 | 916 | 2.34 |
| | 0.8 | 4102 | 944 | 2.42 |
| | 1.0 | 3957 | 982 | 2.51 |
| | 1.2 | 3858 | 1013 | 2.59 |
| | 1.4 | 3742 | 1047 | 2.68 |
| T5 | 0.2 | 4628 | 878 | 2.45 |
| | 0.4 | 4516 | 912 | 2.54 |
| | 0.6 | 4402 | 945 | 2.63 |
| | 0.8 | 4295 | 978 | 2.72 |
| | 1.0 | 4186 | 1011 | 2.82 |
| | 1.2 | 4076 | 1042 | 2.90 |
| | 1.4 | 3969 | 1073 | 2.99 |
| T6** | 0.2 | 2827 | 607 | 0.73 |
| | 0.4 | 2665 | 658 | 0.79 |
| | 0.6 | 2520 | 711 | 0.85 |
| | 0.8 | - | - | - |
| | 1.0 | - | - | - |
| | 1.2 | - | - | - |
| | 1.4 | - | - | - |
| T7** | 0.2 | 3558 | 709 | 1.21 |
| | 0.4 | 3431 | 750 | 1.28 |
| | 0.6 | 3279 | 796 | 1.36 |
| | 0.8 | 3149 | 839 | 1.43 |
| | 1.0 | 3016 | 880 | 1.50 |
| | 1.2 | 2761 | 934 | 1.60 |
| | 1.4 | 2527 | 991 | 1.69 |
| T8 | 0.2 | 4151 | 794 | 1.77 |
| | 0.4 | 4057 | 834 | 1.86 |
| | 0.6 | 3904 | 874 | 1.95 |
| | 0.8 | 3795 | 914 | 2.04 |
| | 1.0 | 3678 | 951 | 2.1 |
| | 1.2 | 3551 | 984 | 2.19 |
| | 1.4 | 3421 | 1024 | 2.28 |
| T9 | 0.2 | 4414 | 832 | 2.11 |
| | 0.4 | 4338 | 877 | 2.20 |
| | 0.6 | 4206 | 912 | 2.29 |
| | 0.8 | 4092 | 952 | 2.39 |
| | 1.0 | 3969 | 988 | 2.48 |
| | 1.2 | 3895 | 1012 | 2.54 |
| | 1.4 | 3803 | 1044 | 2.62 |
| T10 | 0.2 | 4726 | 877 | 2.44 |
| | 0.4 | 4606 | 914 | 2.55 |
| | 0.6 | 4488 | 948 | 2.64 |
| | 0.8 | 4382 | 980 | 2.73 |
| | 1.0 | 4264 | 1017 | 2.83 |
| | 1.2 | 4158 | 1046 | 2.91 |
| | 1.4 | 4051 | 1080 | 3.01 |

| Horizontal Flow | | | | |
|---|---|---|---|---|
| Speed Tap | ESP | CFM | RPM | BHP |
| T1** | 0.2 | 2286 | 486 | 0.41 |
| | 0.4 | - | - | - |
| | 0.6 | - | - | - |
| | 0.8 | - | - | - |
| | 1.0 | - | - | - |
| | 1.2 | - | - | - |
| | 1.4 | - | - | - |
| T2** | 0.2 | 3464 | 626 | 0.97 |
| | 0.4 | 3294 | 683 | 1.06 |
| | 0.6 | 3139 | 730 | 1.13 |
| | 0.8 | 2859 | 807 | 1.25 |
| | 1.0 | 2544 | 884 | 1.37 |
| | 1.2 | 2387 | 920 | 1.42 |
| | 1.4 | 2208 | 963 | 1.49 |
| T3 | 0.2 | 3874 | 673 | 1.25 |
| | 0.4 | 3699 | 713 | 1.32 |
| | 0.6 | 3560 | 769 | 1.43 |
| | 0.8 | 3438 | 820 | 1.52 |
| | 1.0 | 3243 | 870 | 1.62 |
| | 1.2 | - | - | - |
| | 1.4 | - | - | - |
| T4 | 0.2 | 4671 | 773 | 1.98 |
| | 0.4 | 4596 | 820 | 2.10 |
| | 0.6 | 4420 | 854 | 2.19 |
| | 0.8 | 4250 | 894 | 2.29 |
| | 1.0 | 4119 | 928 | 2.38 |
| | 1.2 | 3987 | 960 | 2.46 |
| | 1.4 | 3873 | 1008 | 2.58 |
| T5 | 0.2 | 4896 | 802 | 2.23 |
| | 0.4 | 4771 | 839 | 2.34 |
| | 0.6 | 4646 | 878 | 2.45 |
| | 0.8 | 4510 | 915 | 2.55 |
| | 1.0 | 4378 | 950 | 2.65 |
| | 1.2 | 4242 | 992 | 2.76 |
| | 1.4 | 4093 | 1035 | 2.88 |
| T6** | 0.2 | 2978 | 554 | 0.66 |
| | 0.4 | 2813 | 611 | 0.73 |
| | 0.6 | 2559 | 849 | 1.01 |
| | 0.8 | 2285 | 754 | 0.90 |
| | 1.0 | - | - | - |
| | 1.2 | - | - | - |
| | 1.4 | - | - | - |
| T7** | 0.2 | 3768 | 643 | 1.10 |
| | 0.4 | 3613 | 684 | 1.17 |
| | 0.6 | 3406 | 701 | 1.20 |
| | 0.8 | 3199 | 797 | 1.36 |
| | 1.0 | 3035 | 852 | 1.46 |
| | 1.2 | 2723 | 928 | 1.59 |
| | 1.4 | 2396 | 962 | 1.64 |
| T8 | 0.2 | 4433 | 721 | 1.61 |
| | 0.4 | 4243 | 757 | 1.69 |
| | 0.6 | 4125 | 822 | 1.83 |
| | 0.8 | 3997 | 849 | 1.89 |
| | 1.0 | 3809 | 896 | 2.00 |
| | 1.2 | 3675 | 946 | 2.1 |
| | 1.4 | 3505 | 980 | 2.2 |
| T9 | 0.2 | 4741 | 758 | 1.91 |
| | 0.4 | 4572 | 797 | 2.00 |
| | 0.6 | 4461 | 828 | 2.08 |
| | 0.8 | 4341 | 881 | 2.21 |
| | 1.0 | 4140 | 922 | 2.32 |
| | 1.2 | 4065 | 956 | 2.40 |
| | 1.4 | 3966 | 998 | 2.51 |
| T10 | 0.2 | 5018 | 794 | 2.21 |
| | 0.4 | 4884 | 834 | 2.32 |
| | 0.6 | 4750 | 875 | 2.44 |
| | 0.8 | 4613 | 912 | 2.54 |
| | 1.0 | 4481 | 950 | 2.65 |
| | 1.2 | 4339 | 990 | 2.76 |
| | 1.4 | 4187 | 1030 | 2.87 |

shaded speed tap - Gas heating airflow.
**(T1) (T2) and (T6)(T7) are part load only.

**10 Ton • 240 MBH Gas Heat Exchanger • High Static Direct Drive**
**Models: DHG1203WH, DHG1204WH, DHG1207WH**

| Down Flow | | | | |
|---|---|---|---|---|
| Speed Tap | ESP | CFM | RPM | BHP |
| T1** | 0.2 | 2248 | 535 | 0.44 |
| | 0.4 | - | - | - |
| | 0.6 | - | - | - |
| | 0.8 | - | - | - |
| | 1.0 | - | - | - |
| | 1.2 | - | - | - |
| | 1.4 | - | - | - |
| | 1.6 | - | - | - |
| | 1.8 | - | - | - |
| | 2.0 | - | - | - |
| T2** | 0.2 | 3814 | 761 | 1.35 |
| | 0.4 | 3709 | 802 | 1.42 |
| | 0.6 | 3534 | 839 | 1.49 |
| | 0.8 | 3399 | 887 | 1.57 |
| | 1.0 | 3265 | 919 | 1.63 |
| | 1.2 | 3012 | 967 | 1.72 |
| | 1.4 | 2779 | 1027 | 1.82 |
| | 1.6 | 2643 | 1042 | 1.85 |
| | 1.8 | 2509 | 1060 | 1.88 |
| | 2.0 | 2383 | 1120 | 1.99 |
| T3 | 0.2 | 3814 | 761 | 1.35 |
| | 0.4 | 3709 | 802 | 1.42 |
| | 0.6 | 3534 | 839 | 1.49 |
| | 0.8 | 3399 | 887 | 1.57 |
| | 1.0 | 3265 | 919 | 1.63 |
| | 1.2 | 3012 | 967 | 1.72 |
| | 1.4 | - | - | - |
| | 1.6 | - | - | - |
| | 1.8 | - | - | - |
| | 2.0 | - | - | - |
| T4 | 0.2 | 4790 | 914 | 2.55 |
| | 0.4 | 4674 | 948 | 2.64 |
| | 0.6 | 4565 | 982 | 2.74 |
| | 0.8 | 4440 | 1013 | 2.82 |
| | 1.0 | 4321 | 1046 | 2.91 |
| | 1.2 | 4211 | 1076 | 3.00 |
| | 1.4 | 4094 | 1104 | 3.08 |
| | 1.6 | 3988 | 1135 | 3.16 |
| | 1.8 | 3884 | 1163 | 3.24 |
| | 2.0 | 3770 | 1192 | 3.32 |
| T5 | 0.2 | 4976 | 948 | 2.83 |
| | 0.4 | 4866 | 979 | 2.93 |
| | 0.6 | 4763 | 1010 | 3.02 |
| | 0.8 | 4634 | 1040 | 3.11 |
| | 1.0 | 4520 | 1071 | 3.20 |
| | 1.2 | 4408 | 1099 | 3.28 |
| | 1.4 | 4288 | 1128 | 3.37 |
| | 1.6 | 4187 | 1157 | 3.46 |
| | 1.8 | 4078 | 1182 | 3.53 |
| | 2.0 | 3976 | 1214 | 3.63 |
| T6** | 0.2 | 3158 | 668 | 0.92 |
| | 0.4 | 3033 | 713 | 0.98 |
| | 0.6 | 2830 | 761 | 1.05 |
| | 0.8 | 2693 | 809 | 1.12 |
| | 1.0 | 2457 | 864 | 1.19 |
| | 1.2 | - | - | - |
| | 1.4 | - | - | - |
| | 1.6 | - | - | - |
| | 1.8 | - | - | - |
| | 2.0 | - | - | - |

| Horizontal Flow | | | | |
|---|---|---|---|---|
| Speed Tap | ESP | CFM | RPM | BHP |
| T1** | 0.2 | 2312 | 493 | 0.40 |
| | 0.4 | - | - | - |
| | 0.6 | - | - | - |
| | 0.8 | - | - | - |
| | 1.0 | - | - | - |
| | 1.2 | - | - | - |
| | 1.4 | - | - | - |
| | 1.6 | - | - | - |
| | 1.8 | - | - | - |
| | 2.0 | - | - | - |
| T2** | 0.2 | 3815 | 680 | 1.21 |
| | 0.4 | 3705 | 721 | 1.28 |
| | 0.6 | 3514 | 777 | 1.38 |
| | 0.8 | 3367 | 823 | 1.46 |
| | 1.0 | 3222 | 867 | 1.54 |
| | 1.2 | 2937 | 938 | 1.66 |
| | 1.4 | 2670 | 1004 | 1.78 |
| | 1.6 | 2522 | 1040 | 1.84 |
| | 1.8 | 2375 | 1072 | 1.90 |
| | 2.0 | 2222 | 1107 | 1.96 |
| T3 | 0.2 | 3815 | 680 | 1.21 |
| | 0.4 | 3705 | 721 | 1.28 |
| | 0.6 | 3514 | 777 | 1.38 |
| | 0.8 | 3367 | 823 | 1.46 |
| | 1.0 | 3222 | 867 | 1.54 |
| | 1.2 | - | - | - |
| | 1.4 | - | - | - |
| | 1.6 | - | - | - |
| | 1.8 | - | - | - |
| | 2.0 | - | - | - |
| T4 | 0.2 | 4915 | 830 | 2.31 |
| | 0.4 | 4789 | 872 | 2.43 |
| | 0.6 | 4659 | 905 | 2.52 |
| | 0.8 | 4533 | 959 | 2.67 |
| | 1.0 | 4420 | 980 | 2.73 |
| | 1.2 | 4278 | 1050 | 2.93 |
| | 1.4 | 4139 | 1055 | 2.94 |
| | 1.6 | 4024 | 1145 | 3.19 |
| | 1.8 | 3892 | 1125 | 3.13 |
| | 2.0 | 3778 | 1150 | 3.20 |
| T5 | 0.2 | - | - | - |
| | 0.4 | 4972 | 891 | 2.66 |
| | 0.6 | 4843 | 925 | 2.76 |
| | 0.8 | 4720 | 964 | 2.88 |
| | 1.0 | 4607 | 1002 | 2.99 |
| | 1.2 | 4471 | 1036 | 3.09 |
| | 1.4 | 4338 | 1070 | 3.20 |
| | 1.6 | 4223 | 1105 | 3.30 |
| | 1.8 | 4095 | 1140 | 3.41 |
| | 2.0 | 3983 | 1170 | 3.50 |
| T6** | 0.2 | 3265 | 605 | 0.83 |
| | 0.4 | 3112 | 661 | 0.91 |
| | 0.6 | 2944 | 713 | 0.98 |
| | 0.8 | 2759 | 766 | 1.06 |
| | 1.0 | 2540 | 834 | 1.15 |
| | 1.2 | 2250 | 898 | 1.24 |
| | 1.4 | - | - | - |
| | 1.6 | - | - | - |
| | 1.8 | - | - | - |
| | 2.0 | - | - | - |

shaded speed tap - Gas heating airflow.
**(T1) (T2) and (T6)(T7) are part load only.

**10 Ton • 240 MBH Gas Heat Exchanger • High Static Direct Drive**
**Models: DHG1203WH, DHG1204WH, DHG1207WH**

| Down Flow | | | | |
|---|---|---|---|---|
| Speed Tap | ESP | CFM | RPM | BHP |
| T7** | 0.2 | 3926 | 777 | 1.46 |
| | 0.4 | 3816 | 817 | 1.54 |
| | 0.6 | 3651 | 855 | 1.61 |
| | 0.8 | 3520 | 900 | 1.70 |
| | 1.0 | 3387 | 933 | 1.76 |
| | 1.2 | 3162 | 978 | 1.84 |
| | 1.4 | 2953 | 1032 | 1.95 |
| | 1.6 | 2820 | 1051 | 1.98 |
| | 1.8 | 2694 | 1072 | 2.02 |
| | 2.0 | 2566 | 1125 | 2.12 |
| T8 | 0.2 | 4420 | 851 | 2.04 |
| | 0.4 | 4301 | 890 | 2.13 |
| | 0.6 | 4173 | 927 | 2.22 |
| | 0.8 | 4049 | 963 | 2.30 |
| | 1.0 | 3923 | 997 | 2.39 |
| | 1.2 | 3788 | 1032 | 2.47 |
| | 1.4 | 3652 | 1066 | 2.55 |
| | 1.6 | 3535 | 1096 | 2.62 |
| | 1.8 | 3430 | 1125 | 2.69 |
| | 2.0 | 3302 | 1157 | 2.77 |
| T9 | 0.2 | 4973 | 947 | 3.02 |
| | 0.4 | 4862 | 978 | 3.12 |
| | 0.6 | 4760 | 1010 | 3.22 |
| | 0.8 | 4629 | 1039 | 3.31 |
| | 1.0 | 4509 | 1067 | 3.40 |
| | 1.2 | 4402 | 1098 | 3.50 |
| | 1.4 | 4287 | 1128 | 3.60 |
| | 1.6 | 4181 | 1156 | 3.69 |
| | 1.8 | 4069 | 1184 | 3.78 |
| | 2.0 | 3972 | 1214 | 3.87 |
| T10 | 0.2 | 5486 | 1024 | 3.94 |
| | 0.4 | 5379 | 1069 | 4.11 |
| | 0.6 | 5276 | 1093 | 4.20 |
| | 0.8 | 5157 | 1107 | 4.26 |
| | 1.0 | 5049 | 1140 | 4.38 |
| | 1.2 | 4938 | 1164 | 4.47 |
| | 1.4 | 4824 | 1190 | 4.57 |
| | 1.6 | 4720 | 1219 | 4.68 |
| | 1.8 | 4609 | 1246 | 4.79 |
| | 2.0 | 4509 | 1273 | 4.89 |

| Horizontal Flow | | | | |
|---|---|---|---|---|
| Speed Tap | ESP | CFM | RPM | BHP |
| T7** | 0.2 | 3932 | 685 | 1.29 |
| | 0.4 | 3813 | 730 | 1.38 |
| | 0.6 | 3645 | 782 | 1.47 |
| | 0.8 | 3511 | 829 | 1.56 |
| | 1.0 | 3357 | 879 | 1.66 |
| | 1.2 | 3137 | 941 | 1.77 |
| | 1.4 | 2982 | 998 | 1.88 |
| | 1.6 | 2729 | 1048 | 1.98 |
| | 1.8 | 2521 | 1095 | 2.07 |
| | 2.0 | 2372 | 1127 | 2.13 |
| T8 | 0.2 | 4542 | 765 | 1.83 |
| | 0.4 | 4402 | 809 | 1.94 |
| | 0.6 | 4283 | 851 | 2.04 |
| | 0.8 | 4162 | 893 | 2.14 |
| | 1.0 | 4027 | 934 | 2.24 |
| | 1.2 | 3927 | 977 | 2.34 |
| | 1.4 | 3761 | 1017 | 2.43 |
| | 1.6 | 3596 | 1073 | 2.57 |
| | 1.8 | 3376 | 1110 | 2.66 |
| | 2.0 | 3089 | 1165 | 2.79 |
| T9 | 0.2 | 5135 | 840 | 2.62 |
| | 0.4 | 5018 | 884 | 2.76 |
| | 0.6 | 4882 | 916 | 2.86 |
| | 0.8 | 4780 | 957 | 2.99 |
| | 1.0 | 4670 | 992 | 3.09 |
| | 1.2 | 4535 | 1031 | 3.22 |
| | 1.4 | 4464 | 1075 | 3.35 |
| | 1.6 | 4305 | 1109 | 3.46 |
| | 1.8 | 4188 | 1154 | 3.60 |
| | 2.0 | 4102 | 1128 | 3.52 |
| T10 | 0.2 | 5656 | 926 | 3.56 |
| | 0.4 | 5524 | 956 | 3.67 |
| | 0.6 | 5386 | 985 | 3.78 |
| | 0.8 | 5281 | 1019 | 3.92 |
| | 1.0 | 5155 | 1049 | 4.03 |
| | 1.2 | 5040 | 1083 | 4.16 |
| | 1.4 | 4940 | 1117 | 4.29 |
| | 1.6 | 4800 | 1148 | 4.41 |
| | 1.8 | 4678 | 1188 | 4.57 |
| | 2.0 | 4557 | 1209 | 4.65 |

shaded speed tap - Gas heating airflow.
**(T1) (T2) and (T6)(T7) are part load only.

**12.5 Ton • 130 MBH Gas Heat Exchanger • Standard Static Direct Drive**
**Models: DHG1503DL, DHG1504DL, DHG1507DL**

| Down Flow | | | | |
|---|---|---|---|---|
| Speed Tap | ESP | CFM | RPM | BHP |
| T1** | 0.2 | 2377 | 559 | 0.52 |
| | 0.4 | - | - | - |
| | 0.6 | - | - | - |
| | 0.8 | - | - | - |
| T2** | 0.2 | 3178 | 662 | 0.93 |
| | 0.4 | 3007 | 705 | 0.99 |
| | 0.6 | 2856 | 751 | 1.05 |
| | 0.8 | 2533 | 822 | 1.16 |
| T3 | 0.2 | 3944 | 784 | 1.59 |
| | 0.4 | 3783 | 823 | 1.67 |
| | 0.6 | - | - | - |
| | 0.8 | - | - | - |
| T4 | 0.2 | 4435 | 842 | 2.08 |
| | 0.4 | 4287 | 886 | 2.19 |
| | 0.6 | 4153 | 922 | 2.28 |
| | 0.8 | 4025 | 952 | 2.36 |
| T5 | 0.2 | 4719 | 897 | 2.50 |
| | 0.4 | 4587 | 929 | 2.59 |
| | 0.6 | 4458 | 962 | 2.68 |
| | 0.8 | 4329 | 993 | 2.77 |
| T6** | 0.2 | 1828 | 480 | 0.30 |
| | 0.4 | 1418 | 565 | 0.35 |
| | 0.6 | - | - | - |
| | 0.8 | - | - | - |
| T7** | 0.2 | 2150 | 527 | 0.42 |
| | 0.4 | 1867 | 601 | 0.48 |
| | 0.6 | 1628 | 666 | 0.53 |
| | 0.8 | 1400 | 724 | 0.58 |
| T8 | 0.2 | 2454 | 570 | 0.56 |
| | 0.4 | 2253 | 635 | 0.62 |
| | 0.6 | 2022 | 698 | 0.68 |
| | 0.8 | - | - | - |
| T9 | 0.2 | 2634 | 596 | 0.64 |
| | 0.4 | 2464 | 655 | 0.71 |
| | 0.6 | 2245 | 716 | 0.77 |
| | 0.8 | 1963 | 785 | 0.85 |
| T10 | 0.2 | 2801 | 625 | 0.74 |
| | 0.4 | 2646 | 676 | 0.81 |
| | 0.6 | 2488 | 730 | 0.87 |
| | 0.8 | 2145 | 805 | 0.96 |

| Horizontal Flow | | | | |
|---|---|---|---|---|
| Speed Tap | ESP | CFM | RPM | BHP |
| T1** | 0.2 | 2478 | 525 | 0.49 |
| | 0.4 | - | - | - |
| | 0.6 | - | - | - |
| | 0.8 | - | - | - |
| T2** | 0.2 | 3261 | 616 | 0.87 |
| | 0.4 | 3134 | 667 | 0.94 |
| | 0.6 | 3011 | 717 | 1.01 |
| | 0.8 | 2786 | 779 | 1.09 |
| T3 | 0.2 | 4019 | 720 | 1.46 |
| | 0.4 | 3926 | 756 | 1.53 |
| | 0.6 | 3807 | 805 | 1.63 |
| | 0.8 | - | - | - |
| T4 | 0.2 | 4484 | 786 | 1.95 |
| | 0.4 | 4364 | 830 | 2.05 |
| | 0.6 | 4287 | 863 | 2.14 |
| | 0.8 | 4194 | 899 | 2.23 |
| T5 | 0.2 | 4777 | 830 | 2.31 |
| | 0.4 | 4680 | 865 | 2.41 |
| | 0.6 | 4581 | 901 | 2.51 |
| | 0.8 | 4485 | 934 | 2.60 |
| T6** | 0.2 | 1946 | 462 | 0.29 |
| | 0.4 | 1869 | 607 | 0.38 |
| | 0.6 | - | - | - |
| | 0.8 | - | - | - |
| T7** | 0.2 | 2256 | 499 | 0.40 |
| | 0.4 | 1980 | 532 | 0.43 |
| | 0.6 | 1756 | 654 | 0.52 |
| | 0.8 | 1432 | 725 | 0.58 |
| T8 | 0.2 | 2552 | 534 | 0.52 |
| | 0.4 | 2287 | 549 | 0.54 |
| | 0.6 | 2199 | 672 | 0.65 |
| | 0.8 | 1853 | 746 | 0.73 |
| T9 | 0.2 | 2728 | 556 | 0.60 |
| | 0.4 | 2519 | 587 | 0.63 |
| | 0.6 | 2428 | 683 | 0.74 |
| | 0.8 | 2154 | 755 | 0.82 |
| T10 | 0.2 | 2900 | 577 | 0.69 |
| | 0.4 | 2744 | 638 | 0.76 |
| | 0.6 | 2586 | 702 | 0.84 |
| | 0.8 | 2435 | 756 | 0.90 |

shaded speed tap - Gas heating airflow.
**(T1) (T2) and (T6)(T7) are part load only.

**12.5 Ton • 130 MBH Gas Heat Exchanger • Medium Static Direct Drive**
**Models: DHG1503LL, DHG1504LL, DHG1507LL**

| Down Flow | | | | |
|---|---|---|---|---|
| Speed Tap | ESP | CFM | RPM | BHP |
| T1** | 0.2 | 2377 | 559 | 0.52 |
| | 0.4 | - | - | - |
| | 0.6 | - | - | - |
| | 0.8 | - | - | - |
| | 1.0 | - | - | - |
| | 1.2 | - | - | - |
| | 1.4 | - | - | - |
| T2** | 0.2 | 3655 | 740 | 1.32 |
| | 0.4 | 3495 | 782 | 1.40 |
| | 0.6 | 3361 | 820 | 1.46 |
| | 0.8 | 3231 | 857 | 1.53 |
| | 1.0 | 2967 | 915 | 1.63 |
| | 1.2 | 2685 | 969 | 1.73 |
| | 1.4 | 2550 | 1001 | 1.79 |
| T3 | 0.2 | 3944 | 784 | 1.59 |
| | 0.4 | 3783 | 823 | 1.67 |
| | 0.6 | - | - | - |
| | 0.8 | - | - | - |
| | 1.0 | - | - | - |
| | 1.2 | - | - | - |
| | 1.4 | - | - | - |
| T4 | 0.2 | 4536 | 878 | 2.30 |
| | 0.4 | 4407 | 910 | 2.38 |
| | 0.6 | 4304 | 939 | 2.46 |
| | 0.8 | 4176 | 974 | 2.55 |
| | 1.0 | 4066 | 1004 | 2.63 |
| | 1.2 | 3946 | 1036 | 2.71 |
| | 1.4 | 3826 | 1067 | 2.79 |
| T5 | 0.2 | 4719 | 897 | 2.50 |
| | 0.4 | 4587 | 929 | 2.59 |
| | 0.6 | 4458 | 962 | 2.68 |
| | 0.8 | 4329 | 993 | 2.77 |
| | 1.0 | 4211 | 1025 | 2.86 |
| | 1.2 | 4087 | 1057 | 2.94 |
| | 1.4 | 3975 | 1087 | 3.03 |
| T6** | 0.2 | 2072 | 515 | 0.39 |
| | 0.4 | 1763 | 592 | 0.45 |
| | 0.6 | 1524 | 658 | 0.50 |
| | 0.8 | - | - | - |
| | 1.0 | - | - | - |
| | 1.2 | - | - | - |
| | 1.4 | - | - | - |
| T7** | 0.2 | 2712 | 607 | 0.69 |
| | 0.4 | 2553 | 665 | 0.75 |
| | 0.6 | 2339 | 724 | 0.82 |
| | 0.8 | 2056 | 793 | 0.90 |
| | 1.0 | 1860 | 839 | 0.95 |
| | 1.2 | 1712 | 895 | 1.01 |
| | 1.4 | 1479 | 904 | 1.02 |
| T8 | 0.2 | 2940 | 640 | 0.82 |
| | 0.4 | 2797 | 691 | 0.88 |
| | 0.6 | 2603 | 746 | 0.95 |
| | 0.8 | 2325 | 813 | 1.04 |
| | 1.0 | 2109 | 864 | 1.1 |
| | 1.2 | 1975 | 914 | 1.17 |
| | 1.4 | 1797 | 944 | 1.21 |
| T9 | 0.2 | 3281 | 688 | 1.04 |
| | 0.4 | 3136 | 733 | 1.11 |
| | 0.6 | 2976 | 779 | 1.18 |
| | 0.8 | 2731 | 838 | 1.27 |
| | 1.0 | 2505 | 892 | 1.35 |
| | 1.2 | 2356 | 933 | 1.41 |
| | 1.4 | 2107 | 944 | 1.43 |
| T10 | 0.2 | 3586 | 732 | 1.28 |
| | 0.4 | 3419 | 772 | 1.35 |
| | 0.6 | 3288 | 811 | 1.42 |
| | 0.8 | 3089 | 858 | 1.50 |
| | 1.0 | 2878 | 909 | 1.59 |
| | 1.2 | 2754 | 948 | 1.66 |
| | 1.4 | 2404 | 1009 | 1.77 |

| Horizontal Flow | | | | |
|---|---|---|---|---|
| Speed Tap | ESP | CFM | RPM | BHP |
| T1** | 0.2 | 2478 | 525 | 0.49 |
| | 0.4 | - | - | - |
| | 0.6 | - | - | - |
| | 0.8 | - | - | - |
| | 1.0 | - | - | - |
| | 1.2 | - | - | - |
| | 1.4 | - | - | - |
| T2** | 0.2 | 3743 | 682 | 1.22 |
| | 0.4 | 3661 | 715 | 1.28 |
| | 0.6 | 3519 | 772 | 1.38 |
| | 0.8 | 3457 | 814 | 1.45 |
| | 1.0 | 3294 | 858 | 1.53 |
| | 1.2 | 3051 | 924 | 1.65 |
| | 1.4 | 2667 | 995 | 1.78 |
| T3 | 0.2 | 4019 | 720 | 1.46 |
| | 0.4 | 3926 | 756 | 1.53 |
| | 0.6 | 3807 | 805 | 1.63 |
| | 0.8 | - | - | - |
| | 1.0 | - | - | - |
| | 1.2 | - | - | - |
| | 1.4 | - | - | - |
| T4 | 0.2 | 4609 | 807 | 2.11 |
| | 0.4 | 4517 | 843 | 2.21 |
| | 0.6 | 4424 | 882 | 2.31 |
| | 0.8 | 4323 | 915 | 2.40 |
| | 1.0 | 4216 | 951 | 2.49 |
| | 1.2 | 4115 | 989 | 2.59 |
| | 1.4 | 4010 | 1025 | 2.68 |
| T5 | 0.2 | 4777 | 830 | 2.31 |
| | 0.4 | 4680 | 865 | 2.41 |
| | 0.6 | 4581 | 901 | 2.51 |
| | 0.8 | 4485 | 934 | 2.60 |
| | 1.0 | 4387 | 970 | 2.70 |
| | 1.2 | 4285 | 1005 | 2.80 |
| | 1.4 | 4184 | 1039 | 2.89 |
| T6** | 0.2 | 2181 | 490 | 0.37 |
| | 0.4 | 1930 | 540 | 0.41 |
| | 0.6 | 1632 | 649 | 0.49 |
| | 0.8 | 1355 | 719 | 0.54 |
| | 1.0 | - | - | - |
| | 1.2 | - | - | - |
| | 1.4 | - | - | - |
| T7** | 0.2 | 2806 | 565 | 0.64 |
| | 0.4 | 2623 | 608 | 0.69 |
| | 0.6 | 2520 | 688 | 0.78 |
| | 0.8 | 2285 | 758 | 0.86 |
| | 1.0 | 2051 | 818 | 0.93 |
| | 1.2 | 1803 | 886 | 1.00 |
| | 1.4 | 1651 | 957 | 1.08 |
| T8 | 0.2 | 3033 | 593 | 0.76 |
| | 0.4 | 2898 | 651 | 0.83 |
| | 0.6 | 2749 | 702 | 0.90 |
| | 0.8 | 2619 | 766 | 0.98 |
| | 1.0 | 2313 | 815 | 1.04 |
| | 1.2 | 2042 | 873 | 1.1 |
| | 1.4 | 1798 | 909 | 1.2 |
| T9 | 0.2 | 3379 | 636 | 0.96 |
| | 0.4 | 3177 | 687 | 1.04 |
| | 0.6 | 3045 | 725 | 1.10 |
| | 0.8 | 2914 | 782 | 1.19 |
| | 1.0 | 2687 | 819 | 1.24 |
| | 1.2 | 2461 | 867 | 1.31 |
| | 1.4 | 2235 | 933 | 1.41 |
| T10 | 0.2 | 3697 | 677 | 1.19 |
| | 0.4 | 3487 | 722 | 1.27 |
| | 0.6 | 3346 | 758 | 1.33 |
| | 0.8 | 3228 | 812 | 1.42 |
| | 1.0 | 3136 | 862 | 1.51 |
| | 1.2 | 2969 | 911 | 1.60 |
| | 1.4 | 2739 | 979 | 1.72 |

shaded speed tap - Gas heating airflow.
**(T1) (T2) and (T6)(T7) are part load only.

**12.5 Ton • 130 MBH Gas Heat Exchanger • High Static Direct Drive**
**Models: DHG1503WL, DHG1504WL, DHG1507WL**

| Down Flow | | | | |
|---|---|---|---|---|
| Speed Tap | ESP | CFM | RPM | BHP |
| T1** | 0.2 | 2511 | 639 | 0.63 |
| | 0.4 | - | - | - |
| | 0.6 | - | - | - |
| | 0.8 | - | - | - |
| | 1.0 | - | - | - |
| | 1.2 | - | - | - |
| | 1.4 | - | - | - |
| | 1.6 | - | - | - |
| | 1.8 | - | - | - |
| | 2.0 | - | - | - |
| T2** | 0.2 | 3737 | 894 | 1.97 |
| | 0.4 | 3699 | 919 | 2.03 |
| | 0.6 | 3604 | 952 | 2.10 |
| | 0.8 | 3476 | 990 | 2.18 |
| | 1.0 | 3276 | 1035 | 2.28 |
| | 1.2 | 3052 | 1082 | 2.38 |
| | 1.4 | 2890 | 1120 | 2.47 |
| | 1.6 | 2738 | 1154 | 2.54 |
| | 1.8 | 2584 | 1186 | 2.61 |
| | 2.0 | 2499 | 1207 | 2.66 |
| T3 | 0.2 | 3953 | 863 | 1.80 |
| | 0.4 | 3837 | 903 | 1.88 |
| | 0.6 | - | - | - |
| | 0.8 | - | - | - |
| | 1.0 | - | - | - |
| | 1.2 | - | - | - |
| | 1.4 | - | - | - |
| | 1.6 | - | - | - |
| | 1.8 | - | - | - |
| | 2.0 | - | - | - |
| T4 | 0.2 | 4964 | 1024 | 3.47 |
| | 0.4 | 4909 | 1046 | 3.55 |
| | 0.6 | 4808 | 1079 | 3.66 |
| | 0.8 | 4764 | 1096 | 3.72 |
| | 1.0 | 4626 | 1123 | 3.81 |
| | 1.2 | 4507 | 1167 | 3.96 |
| | 1.4 | 4409 | 1207 | 4.10 |
| | 1.6 | 4137 | 1257 | 4.26 |
| | 1.8 | 3878 | 1311 | 4.45 |
| | 2.0 | 3835 | 1332 | 4.52 |
| T5 | 0.2 | 5128 | 1078 | 3.88 |
| | 0.4 | 5061 | 1102 | 3.96 |
| | 0.6 | 4965 | 1131 | 4.07 |
| | 0.8 | 4899 | 1154 | 4.15 |
| | 1.0 | 4779 | 1182 | 4.25 |
| | 1.2 | 4668 | 1214 | 4.37 |
| | 1.4 | 4583 | 1242 | 4.47 |
| | 1.6 | 4367 | 1283 | 4.61 |
| | 1.8 | 4137 | 1330 | 4.78 |
| | 2.0 | 4015 | 1356 | 4.88 |
| T6** | 0.2 | 2308 | 613 | 0.61 |
| | 0.4 | 2028 | 682 | 0.68 |
| | 0.6 | 1744 | 739 | 0.73 |
| | 0.8 | 1619 | 784 | 0.78 |
| | 1.0 | - | - | - |
| | 1.2 | - | - | - |
| | 1.4 | - | - | - |
| | 1.6 | - | - | - |
| | 1.8 | - | - | - |
| | 2.0 | - | - | - |

| Horizontal Flow | | | | |
|---|---|---|---|---|
| Speed Tap | ESP | CFM | RPM | BHP |
| T1** | 0.2 | 2735 | 543 | 0.54 |
| | 0.4 | 2600 | 606 | 0.60 |
| | 0.6 | - | - | - |
| | 0.8 | - | - | - |
| | 1.0 | - | - | - |
| | 1.2 | - | - | - |
| | 1.4 | - | - | - |
| | 1.6 | - | - | - |
| | 1.8 | - | - | - |
| | 2.0 | - | - | - |
| T2** | 0.2 | 4297 | 761 | 1.68 |
| | 0.4 | 4168 | 801 | 1.76 |
| | 0.6 | 4081 | 844 | 1.86 |
| | 0.8 | 4030 | 856 | 1.89 |
| | 1.0 | 3939 | 926 | 2.04 |
| | 1.2 | 3789 | 966 | 2.13 |
| | 1.4 | 3553 | 1033 | 2.27 |
| | 1.6 | 3290 | 1090 | 2.40 |
| | 1.8 | 3097 | 1158 | 2.55 |
| | 2.0 | 2906 | 1192 | 2.63 |
| T3 | 0.2 | 4165 | 735 | 1.53 |
| | 0.4 | 4089 | 772 | 1.61 |
| | 0.6 | 3985 | 824 | 1.72 |
| | 0.8 | - | - | - |
| | 1.0 | - | - | - |
| | 1.2 | - | - | - |
| | 1.4 | - | - | - |
| | 1.6 | - | - | - |
| | 1.8 | - | - | - |
| | 2.0 | - | - | - |
| T4 | 0.2 | 5300 | 888 | 3.01 |
| | 0.4 | 5215 | 918 | 3.12 |
| | 0.6 | 5121 | 951 | 3.23 |
| | 0.8 | 5044 | 979 | 3.32 |
| | 1.0 | 4957 | 1015 | 3.44 |
| | 1.2 | 4861 | 1040 | 3.53 |
| | 1.4 | 4769 | 1082 | 3.67 |
| | 1.6 | 4665 | 1099 | 3.73 |
| | 1.8 | 4563 | 1150 | 3.90 |
| | 2.0 | 4455 | 1181 | 4.01 |
| T5 | 0.2 | 5478 | 900 | 3.05 |
| | 0.4 | 5390 | 936 | 3.17 |
| | 0.6 | 5309 | 971 | 3.29 |
| | 0.8 | 5216 | 1003 | 3.40 |
| | 1.0 | 5127 | 1036 | 3.52 |
| | 1.2 | 5046 | 1067 | 3.62 |
| | 1.4 | 4954 | 1096 | 3.72 |
| | 1.6 | 4872 | 1128 | 3.83 |
| | 1.8 | 4794 | 1156 | 3.92 |
| | 2.0 | 4681 | 1188 | 4.03 |
| T6** | 0.2 | 2644 | 545 | 0.54 |
| | 0.4 | 2483 | 620 | 0.61 |
| | 0.6 | 2299 | 683 | 0.68 |
| | 0.8 | 1979 | 773 | 0.77 |
| | 1.0 | 1758 | 817 | 0.81 |
| | 1.2 | 1558 | 877 | 0.87 |
| | 1.4 | 1448 | 920 | 0.91 |
| | 1.6 | - | - | - |
| | 1.8 | - | - | - |
| | 2.0 | - | - | - |

shaded speed tap - Gas heating airflow.
**(T1) (T2) and (T6)(T7) are part load only.

**12.5 Ton • 130 MBH Gas Heat Exchanger • High Static Direct Drive**
**Models: DHG1503WL, DHG1504WL, DHG1507WL**

| Down Flow | | | | |
|---|---|---|---|---|
| Speed Tap | ESP | CFM | RPM | BHP |
| T7** | 0.2 | - | - | - |
| | 0.4 | 2903 | 798 | 1.24 |
| | 0.6 | 2673 | 845 | 1.31 |
| | 0.8 | 2525 | 888 | 1.37 |
| | 1.0 | 2282 | 933 | 1.44 |
| | 1.2 | 1982 | 972 | 1.50 |
| | 1.4 | 1803 | 1007 | 1.56 |
| | 1.6 | 1671 | 1031 | 1.60 |
| | 1.8 | 1475 | 1065 | 1.65 |
| | 2.0 | 1335 | 1097 | 1.70 |
| T8 | 0.2 | 3136 | 755 | 1.22 |
| | 0.4 | 3006 | 812 | 1.32 |
| | 0.6 | 2794 | 858 | 1.39 |
| | 0.8 | 2632 | 901 | 1.46 |
| | 1.0 | 2409 | 945 | 1.53 |
| | 1.2 | 2114 | 984 | 1.59 |
| | 1.4 | 1963 | 1025 | 1.66 |
| | 1.6 | 1854 | 1046 | 1.70 |
| | 1.8 | - | - | - |
| | 2.0 | - | - | - |
| T9 | 0.2 | 3308 | 785 | 1.39 |
| | 0.4 | 3202 | 839 | 1.48 |
| | 0.6 | 3028 | 883 | 1.56 |
| | 0.8 | 2838 | 925 | 1.63 |
| | 1.0 | 2655 | 967 | 1.71 |
| | 1.2 | 2380 | 1007 | 1.78 |
| | 1.4 | 2257 | 1056 | 1.86 |
| | 1.6 | 2164 | 1076 | 1.90 |
| | 1.8 | 1994 | 1113 | 1.97 |
| | 2.0 | 1914 | 1139 | 2.01 |
| T10 | 0.2 | 3472 | 814 | 1.56 |
| | 0.4 | 3384 | 865 | 1.65 |
| | 0.6 | 3244 | 907 | 1.73 |
| | 0.8 | 3032 | 948 | 1.81 |
| | 1.0 | 2886 | 989 | 1.89 |
| | 1.2 | 2639 | 1029 | 1.97 |
| | 1.4 | 2515 | 1083 | 2.07 |
| | 1.6 | 2411 | 1105 | 2.11 |
| | 1.8 | 2255 | 1141 | 2.18 |
| | 2.0 | 2192 | 1165 | 2.22 |

| Horizontal Flow | | | | |
|---|---|---|---|---|
| Speed Tap | ESP | CFM | RPM | BHP |
| T7** | 0.2 | - | - | - |
| | 0.4 | - | - | - |
| | 0.6 | - | - | - |
| | 0.8 | - | - | - |
| | 1.0 | - | - | - |
| | 1.2 | 2716 | 928 | 1.44 |
| | 1.4 | 2495 | 989 | 1.53 |
| | 1.6 | 2298 | 1033 | 1.60 |
| | 1.8 | 2137 | 1076 | 1.66 |
| | 2.0 | 2078 | 1101 | 1.70 |
| T8 | 0.2 | 3602 | 665 | 1.08 |
| | 0.4 | 3491 | 707 | 1.15 |
| | 0.6 | 3379 | 759 | 1.23 |
| | 0.8 | 3205 | 818 | 1.33 |
| | 1.0 | 3052 | 874 | 1.42 |
| | 1.2 | 2852 | 932 | 1.51 |
| | 1.4 | 2617 | 995 | 1.61 |
| | 1.6 | 2401 | 1045 | 1.69 |
| | 1.8 | 2234 | 1092 | 1.77 |
| | 2.0 | 2196 | 1112 | 1.80 |
| T9 | 0.2 | 3793 | 691 | 1.22 |
| | 0.4 | 3667 | 731 | 1.29 |
| | 0.6 | 3566 | 780 | 1.38 |
| | 0.8 | 3441 | 827 | 1.46 |
| | 1.0 | 3306 | 887 | 1.57 |
| | 1.2 | 3114 | 939 | 1.66 |
| | 1.4 | 2858 | 1006 | 1.78 |
| | 1.6 | 2608 | 1066 | 1.88 |
| | 1.8 | 2426 | 1123 | 1.98 |
| | 2.0 | 2404 | 1132 | 2.00 |
| T10 | 0.2 | - | - | - |
| | 0.4 | 3835 | 756 | 1.44 |
| | 0.6 | 3741 | 801 | 1.53 |
| | 0.8 | 3656 | 835 | 1.60 |
| | 1.0 | 3536 | 900 | 1.72 |
| | 1.2 | 3355 | 947 | 1.81 |
| | 1.4 | 3092 | 1015 | 1.94 |
| | 1.6 | 2821 | 1080 | 2.06 |
| | 1.8 | 2627 | 1152 | 2.20 |
| | 2.0 | 2584 | 1152 | 2.20 |

shaded speed tap - Gas heating airflow.
**(T1) (T2) and (T6)(T7) are part load only.

**12.5 Ton • 180 MBH Gas Heat Exchanger • Standard Static Direct Drive**
**Models: DHG1503DM, DHG1504DM, DHG1507DM**

| Down Flow | | | | |
|---|---|---|---|---|
| Speed Tap | ESP | CFM | RPM | BHP |
| T1** | 0.2 | 2377 | 559 | 0.52 |
| | 0.4 | - | - | - |
| | 0.6 | - | - | - |
| | 0.8 | - | - | - |
| T2** | 0.2 | 3178 | 662 | 0.93 |
| | 0.4 | 3007 | 705 | 0.99 |
| | 0.6 | 2856 | 751 | 1.05 |
| | 0.8 | 2533 | 822 | 1.16 |
| T3 | 0.2 | 3944 | 784 | 1.59 |
| | 0.4 | 3783 | 823 | 1.67 |
| | 0.6 | - | - | - |
| | 0.8 | - | - | - |
| T4 | 0.2 | 4435 | 842 | 2.08 |
| | 0.4 | 4287 | 886 | 2.19 |
| | 0.6 | 4153 | 922 | 2.28 |
| | 0.8 | 4025 | 952 | 2.36 |
| T5 | 0.2 | 4719 | 897 | 2.50 |
| | 0.4 | 4587 | 929 | 2.59 |
| | 0.6 | 4458 | 962 | 2.68 |
| | 0.8 | 4329 | 993 | 2.77 |
| T6** | 0.2 | 2072 | 515 | 0.39 |
| | 0.4 | - | - | - |
| | 0.6 | - | - | - |
| | 0.8 | - | - | - |
| T7** | 0.2 | 2634 | 596 | 0.64 |
| | 0.4 | 2464 | 655 | 0.71 |
| | 0.6 | 2245 | 716 | 0.77 |
| | 0.8 | 1963 | 785 | 0.85 |
| T8 | 0.2 | 3004 | 649 | 0.86 |
| | 0.4 | 2863 | 699 | 0.92 |
| | 0.6 | 2675 | 752 | 0.99 |
| | 0.8 | - | - | - |
| T9 | 0.2 | 3250 | 684 | 1.02 |
| | 0.4 | 3106 | 729 | 1.09 |
| | 0.6 | 2943 | 776 | 1.16 |
| | 0.8 | 2694 | 836 | 1.25 |
| T10 | 0.2 | 3474 | 714 | 1.19 |
| | 0.4 | 3314 | 759 | 1.27 |
| | 0.6 | 3178 | 799 | 1.33 |
| | 0.8 | 3035 | 841 | 1.40 |

| Horizontal Flow | | | | |
|---|---|---|---|---|
| Speed Tap | ESP | CFM | RPM | BHP |
| T1** | 0.2 | 2478 | 525 | 0.49 |
| | 0.4 | - | - | - |
| | 0.6 | - | - | - |
| | 0.8 | - | - | - |
| T2** | 0.2 | 3261 | 616 | 0.87 |
| | 0.4 | 3134 | 667 | 0.94 |
| | 0.6 | 3011 | 717 | 1.01 |
| | 0.8 | 2786 | 779 | 1.09 |
| T3 | 0.2 | 4019 | 720 | 1.46 |
| | 0.4 | 3926 | 756 | 1.53 |
| | 0.6 | 3807 | 805 | 1.63 |
| | 0.8 | - | - | - |
| T4 | 0.2 | 4484 | 786 | 1.95 |
| | 0.4 | 4364 | 830 | 2.05 |
| | 0.6 | 4287 | 863 | 2.14 |
| | 0.8 | 4194 | 899 | 2.23 |
| T5 | 0.2 | 4777 | 830 | 2.31 |
| | 0.4 | 4680 | 865 | 2.41 |
| | 0.6 | 4581 | 901 | 2.51 |
| | 0.8 | 4485 | 934 | 2.60 |
| T6** | 0.2 | 2181 | 490 | 0.37 |
| | 0.4 | 1930 | 540 | 0.41 |
| | 0.6 | - | - | - |
| | 0.8 | - | - | - |
| T7** | 0.2 | 2728 | 556 | 0.60 |
| | 0.4 | 2519 | 587 | 0.63 |
| | 0.6 | 2428 | 683 | 0.74 |
| | 0.8 | 2154 | 755 | 0.82 |
| T8 | 0.2 | 3097 | 601 | 0.79 |
| | 0.4 | 2961 | 712 | 0.94 |
| | 0.6 | 2776 | 707 | 0.93 |
| | 0.8 | 2632 | 763 | 1.01 |
| T9 | 0.2 | 3347 | 632 | 0.94 |
| | 0.4 | 3147 | 684 | 1.02 |
| | 0.6 | 3015 | 723 | 1.08 |
| | 0.8 | 2882 | 780 | 1.16 |
| T10 | 0.2 | 3605 | 663 | 1.10 |
| | 0.4 | 3377 | 708 | 1.18 |
| | 0.6 | 3240 | 746 | 1.24 |
| | 0.8 | 3121 | 801 | 1.34 |

shaded speed tap - Gas heating airflow.
**(T1) (T2) and (T6)(T7) are part load only.

**12.5 Ton • 180 MBH Gas Heat Exchanger • Medium Static Direct Drive**
**Models: DHG1503LM, DHG1504LM, DHG1507LM**

| Down Flow | | | | |
|---|---|---|---|---|
| **Speed Tap** | **ESP** | **CFM** | **RPM** | **BHP** |
| **T1**** | 0.2 | 2377 | 559 | 0.52 |
| | 0.4 | - | - | - |
| | 0.6 | - | - | - |
| | 0.8 | - | - | - |
| | 1.0 | - | - | - |
| | 1.2 | - | - | - |
| | 1.4 | - | - | - |
| **T2**** | 0.2 | 3655 | 740 | 1.32 |
| | 0.4 | 3495 | 782 | 1.40 |
| | 0.6 | 3361 | 820 | 1.46 |
| | 0.8 | 3231 | 857 | 1.53 |
| | 1.0 | 2967 | 915 | 1.63 |
| | 1.2 | 2685 | 969 | 1.73 |
| | 1.4 | 2550 | 1001 | 1.79 |
| **T3** | 0.2 | 3944 | 784 | 1.59 |
| | 0.4 | 3783 | 823 | 1.67 |
| | 0.6 | - | - | - |
| | 0.8 | - | - | - |
| | 1.0 | - | - | - |
| | 1.2 | - | - | - |
| | 1.4 | - | - | - |
| **T4** | 0.2 | 4536 | 878 | 2.30 |
| | 0.4 | 4407 | 910 | 2.38 |
| | 0.6 | 4304 | 939 | 2.46 |
| | 0.8 | 4176 | 974 | 2.55 |
| | 1.0 | 4066 | 1004 | 2.63 |
| | 1.2 | 3946 | 1036 | 2.71 |
| | 1.4 | 3826 | 1067 | 2.79 |
| **T5** | 0.2 | 4719 | 897 | 2.50 |
| | 0.4 | 4587 | 929 | 2.59 |
| | 0.6 | 4458 | 962 | 2.68 |
| | 0.8 | 4329 | 993 | 2.77 |
| | 1.0 | 4211 | 1025 | 2.86 |
| | 1.2 | 4087 | 1057 | 2.94 |
| | 1.4 | 3975 | 1087 | 3.03 |
| **T6**** | 0.2 | 2379 | 559 | 0.52 |
| | 0.4 | 2161 | 626 | 0.58 |
| | 0.6 | 1927 | 690 | 0.64 |
| | 0.8 | - | - | - |
| | 1.0 | - | - | - |
| | 1.2 | - | - | - |
| | 1.4 | - | - | - |
| **T7**** | 0.2 | 3161 | 672 | 0.96 |
| | 0.4 | 2995 | 722 | 1.03 |
| | 0.6 | 2866 | 762 | 1.09 |
| | 0.8 | 2551 | 840 | 1.20 |
| | 1.0 | 2392 | 878 | 1.25 |
| | 1.2 | 2198 | 923 | 1.32 |
| | 1.4 | 2034 | 961 | 1.37 |
| **T8** | 0.2 | 3310 | 692 | 1.06 |
| | 0.4 | 3163 | 736 | 1.13 |
| | 0.6 | 3006 | 782 | 1.20 |
| | 0.8 | 2765 | 840 | 1.29 |
| | 1.0 | 2540 | 894 | 1.37 |
| | 1.2 | - | - | - |
| | 1.4 | - | - | - |
| **T9** | 0.2 | 3586 | 732 | 1.28 |
| | 0.4 | 3419 | 772 | 1.35 |
| | 0.6 | 3288 | 811 | 1.42 |
| | 0.8 | 3089 | 858 | 1.50 |
| | 1.0 | 2878 | 909 | 1.59 |
| | 1.2 | 2754 | 948 | 1.66 |
| | 1.4 | - | - | - |
| **T10** | 0.2 | 3834 | 767 | 1.51 |
| | 0.4 | 3647 | 805 | 1.59 |
| | 0.6 | 3528 | 839 | 1.65 |
| | 0.8 | 3369 | 876 | 1.73 |
| | 1.0 | 3183 | 923 | 1.82 |
| | 1.2 | 3149 | 962 | 1.90 |
| | 1.4 | 2667 | 1024 | 2.02 |

| Horizontal Flow | | | | |
|---|---|---|---|---|
| **Speed Tap** | **ESP** | **CFM** | **RPM** | **BHP** |
| **T1**** | 0.2 | 2478 | 525 | 0.49 |
| | 0.4 | - | - | - |
| | 0.6 | - | - | - |
| | 0.8 | - | - | - |
| | 1.0 | - | - | - |
| | 1.2 | - | - | - |
| | 1.4 | - | - | - |
| **T2**** | 0.2 | 3743 | 682 | 1.22 |
| | 0.4 | 3661 | 715 | 1.28 |
| | 0.6 | 3519 | 772 | 1.38 |
| | 0.8 | 3457 | 814 | 1.45 |
| | 1.0 | 3294 | 858 | 1.53 |
| | 1.2 | 3051 | 924 | 1.65 |
| | 1.4 | 2667 | 995 | 1.78 |
| **T3** | 0.2 | 4019 | 720 | 1.46 |
| | 0.4 | 3926 | 756 | 1.53 |
| | 0.6 | 3807 | 805 | 1.63 |
| | 0.8 | - | - | - |
| | 1.0 | - | - | - |
| | 1.2 | - | - | - |
| | 1.4 | - | - | - |
| **T4** | 0.2 | 4609 | 807 | 2.11 |
| | 0.4 | 4517 | 843 | 2.21 |
| | 0.6 | 4424 | 882 | 2.31 |
| | 0.8 | 4323 | 915 | 2.40 |
| | 1.0 | 4216 | 951 | 2.49 |
| | 1.2 | 4115 | 989 | 2.59 |
| | 1.4 | 4010 | 1025 | 2.68 |
| **T5** | 0.2 | 4777 | 830 | 2.31 |
| | 0.4 | 4680 | 865 | 2.41 |
| | 0.6 | 4581 | 901 | 2.51 |
| | 0.8 | 4485 | 934 | 2.60 |
| | 1.0 | 4387 | 970 | 2.70 |
| | 1.2 | 4285 | 1005 | 2.80 |
| | 1.4 | 4184 | 1039 | 2.89 |
| **T6**** | 0.2 | 2478 | 525 | 0.49 |
| | 0.4 | 2198 | 539 | 0.50 |
| | 0.6 | 2096 | 668 | 0.62 |
| | 0.8 | - | - | - |
| | 1.0 | - | - | - |
| | 1.2 | - | - | - |
| | 1.4 | - | - | - |
| **T7**** | 0.2 | 3256 | 621 | 0.89 |
| | 0.4 | 3060 | 673 | 0.96 |
| | 0.6 | 2927 | 713 | 1.02 |
| | 0.8 | 2787 | 773 | 1.10 |
| | 1.0 | 2516 | 807 | 1.15 |
| | 1.2 | 2205 | 837 | 1.20 |
| | 1.4 | 2046 | 919 | 1.31 |
| **T8** | 0.2 | 3409 | 640 | 0.98 |
| | 0.4 | 3206 | 690 | 1.06 |
| | 0.6 | 3073 | 727 | 1.12 |
| | 0.8 | 2943 | 785 | 1.21 |
| | 1.0 | 2731 | 823 | 1.26 |
| | 1.2 | 2519 | 873 | 1.3 |
| | 1.4 | - | - | - |
| **T9** | 0.2 | 3697 | 677 | 1.19 |
| | 0.4 | 3487 | 722 | 1.27 |
| | 0.6 | 3346 | 758 | 1.33 |
| | 0.8 | 3228 | 812 | 1.42 |
| | 1.0 | 3136 | 862 | 1.51 |
| | 1.2 | 2969 | 911 | 1.60 |
| | 1.4 | 2739 | 979 | 1.72 |
| **T10** | 0.2 | 3963 | 713 | 1.40 |
| | 0.4 | 3752 | 752 | 1.48 |
| | 0.6 | 3607 | 787 | 1.55 |
| | 0.8 | 3497 | 839 | 1.65 |
| | 1.0 | 3398 | 881 | 1.74 |
| | 1.2 | 3217 | 925 | 1.82 |
| | 1.4 | 3004 | 994 | 1.96 |

shaded speed tap - Gas heating airflow.
**(T1) (T2) and (T6)(T7) are part load only.

**12.5 Ton • 180 MBH Gas Heat Exchanger • High Static Direct Drive**
**Models: DHG1503WM, DHG1504WM, DHG1507WM**

| Down Flow | | | | |
|---|---|---|---|---|
| Speed Tap | ESP | CFM | RPM | BHP |
| T1** | 0.2 | 2511 | 639 | 0.63 |
| | 0.4 | - | - | - |
| | 0.6 | - | - | - |
| | 0.8 | - | - | - |
| | 1.0 | - | - | - |
| | 1.2 | - | - | - |
| | 1.4 | - | - | - |
| | 1.6 | - | - | - |
| | 1.8 | - | - | - |
| | 2.0 | - | - | - |
| T2** | 0.2 | 3737 | 894 | 1.97 |
| | 0.4 | 3699 | 919 | 2.03 |
| | 0.6 | 3604 | 952 | 2.10 |
| | 0.8 | 3476 | 990 | 2.18 |
| | 1.0 | 3276 | 1035 | 2.28 |
| | 1.2 | 3052 | 1082 | 2.38 |
| | 1.4 | 2890 | 1120 | 2.47 |
| | 1.6 | 2738 | 1154 | 2.54 |
| | 1.8 | 2584 | 1186 | 2.61 |
| | 2.0 | 2499 | 1207 | 2.66 |
| T3 | 0.2 | 3953 | 863 | 1.80 |
| | 0.4 | 3837 | 903 | 1.88 |
| | 0.6 | - | - | - |
| | 0.8 | - | - | - |
| | 1.0 | - | - | - |
| | 1.2 | - | - | - |
| | 1.4 | - | - | - |
| | 1.6 | - | - | - |
| | 1.8 | - | - | - |
| | 2.0 | - | - | - |
| T4 | 0.2 | 4964 | 1024 | 3.47 |
| | 0.4 | 4909 | 1046 | 3.55 |
| | 0.6 | 4808 | 1079 | 3.66 |
| | 0.8 | 4764 | 1096 | 3.72 |
| | 1.0 | 4626 | 1123 | 3.81 |
| | 1.2 | 4507 | 1167 | 3.96 |
| | 1.4 | 4409 | 1207 | 4.10 |
| | 1.6 | 4137 | 1257 | 4.26 |
| | 1.8 | 3878 | 1311 | 4.45 |
| | 2.0 | 3835 | 1332 | 4.52 |
| T5 | 0.2 | 5128 | 1078 | 3.88 |
| | 0.4 | 5061 | 1102 | 3.96 |
| | 0.6 | 4965 | 1131 | 4.07 |
| | 0.8 | 4899 | 1154 | 4.15 |
| | 1.0 | 4779 | 1182 | 4.25 |
| | 1.2 | 4668 | 1214 | 4.37 |
| | 1.4 | 4583 | 1242 | 4.47 |
| | 1.6 | 4367 | 1283 | 4.61 |
| | 1.8 | 4137 | 1330 | 4.78 |
| | 2.0 | 4015 | 1356 | 4.88 |
| T6** | 0.2 | 2642 | 670 | 0.83 |
| | 0.4 | 2424 | 734 | 0.91 |
| | 0.6 | 2138 | 787 | 0.97 |
| | 0.8 | 2032 | 831 | 1.03 |
| | 1.0 | - | - | - |
| | 1.2 | - | - | - |
| | 1.4 | - | - | - |
| | 1.6 | - | - | - |
| | 1.8 | - | - | - |
| | 2.0 | - | - | - |

| Horizontal Flow | | | | |
|---|---|---|---|---|
| Speed Tap | ESP | CFM | RPM | BHP |
| T1** | 0.2 | 2735 | 543 | 0.54 |
| | 0.4 | 2600 | 606 | 0.60 |
| | 0.6 | - | - | - |
| | 0.8 | - | - | - |
| | 1.0 | - | - | - |
| | 1.2 | - | - | - |
| | 1.4 | - | - | - |
| | 1.6 | - | - | - |
| | 1.8 | - | - | - |
| | 2.0 | - | - | - |
| T2** | 0.2 | 4297 | 761 | 1.68 |
| | 0.4 | 4168 | 801 | 1.76 |
| | 0.6 | 4081 | 844 | 1.86 |
| | 0.8 | 4030 | 856 | 1.89 |
| | 1.0 | 3939 | 926 | 2.04 |
| | 1.2 | 3789 | 966 | 2.13 |
| | 1.4 | 3553 | 1033 | 2.27 |
| | 1.6 | 3290 | 1090 | 2.40 |
| | 1.8 | 3097 | 1158 | 2.55 |
| | 2.0 | 2906 | 1192 | 2.63 |
| T3 | 0.2 | 4165 | 735 | 1.53 |
| | 0.4 | 4089 | 772 | 1.61 |
| | 0.6 | 3985 | 824 | 1.72 |
| | 0.8 | - | - | - |
| | 1.0 | - | - | - |
| | 1.2 | - | - | - |
| | 1.4 | - | - | - |
| | 1.6 | - | - | - |
| | 1.8 | - | - | - |
| | 2.0 | - | - | - |
| T4 | 0.2 | 5300 | 888 | 3.01 |
| | 0.4 | 5215 | 918 | 3.12 |
| | 0.6 | 5121 | 951 | 3.23 |
| | 0.8 | 5044 | 979 | 3.32 |
| | 1.0 | 4957 | 1015 | 3.44 |
| | 1.2 | 4861 | 1040 | 3.53 |
| | 1.4 | 4769 | 1082 | 3.67 |
| | 1.6 | 4665 | 1099 | 3.73 |
| | 1.8 | 4563 | 1150 | 3.90 |
| | 2.0 | 4455 | 1181 | 4.01 |
| T5 | 0.2 | 5478 | 900 | 3.05 |
| | 0.4 | 5390 | 936 | 3.17 |
| | 0.6 | 5309 | 971 | 3.29 |
| | 0.8 | 5216 | 1003 | 3.40 |
| | 1.0 | 5127 | 1036 | 3.52 |
| | 1.2 | 5046 | 1067 | 3.62 |
| | 1.4 | 4954 | 1096 | 3.72 |
| | 1.6 | 4872 | 1128 | 3.83 |
| | 1.8 | 4794 | 1156 | 3.92 |
| | 2.0 | 4681 | 1188 | 4.03 |
| T6** | 0.2 | 3038 | 593 | 0.73 |
| | 0.4 | 2944 | 646 | 0.80 |
| | 0.6 | 2790 | 708 | 0.87 |
| | 0.8 | 2484 | 795 | 0.98 |
| | 1.0 | 2287 | 839 | 1.03 |
| | 1.2 | 2082 | 906 | 1.12 |
| | 1.4 | 1935 | 956 | 1.18 |
| | 1.6 | - | - | - |
| | 1.8 | - | - | - |
| | 2.0 | - | - | - |

shaded speed tap - Gas heating airflow.
**(T1) (T2) and (T6)(T7) are part load only.

**12.5 Ton • 180 MBH Gas Heat Exchanger • High Static Direct Drive**
**Models: DHG1503WM, DHG1504WM, DHG1507WM**

| Down Flow | | | | |
|---|---|---|---|---|
| Speed Tap | ESP | CFM | RPM | BHP |
| T7** | 0.2 | 3338 | 800 | 1.43 |
| | 0.4 | 3257 | 846 | 1.51 |
| | 0.6 | 3135 | 889 | 1.59 |
| | 0.8 | 2997 | 928 | 1.66 |
| | 1.0 | 2772 | 977 | 1.75 |
| | 1.2 | 2524 | 1027 | 1.83 |
| | 1.4 | 2381 | 1057 | 1.89 |
| | 1.6 | 2249 | 1086 | 1.94 |
| | 1.8 | 2096 | 1121 | 2.00 |
| | 2.0 | 2026 | 1147 | 2.05 |
| T8 | 0.2 | 3731 | 860 | 1.85 |
| | 0.4 | 3658 | 907 | 1.95 |
| | 0.6 | 3568 | 945 | 2.03 |
| | 0.8 | 3334 | 985 | 2.12 |
| | 1.0 | 3233 | 1023 | 2.20 |
| | 1.2 | 3041 | 1063 | 2.29 |
| | 1.4 | 2883 | 1118 | 2.41 |
| | 1.6 | 2729 | 1147 | 2.47 |
| | 1.8 | 2587 | 1180 | 2.54 |
| | 2.0 | 2525 | 1203 | 2.59 |
| T9 | 0.2 | 3877 | 887 | 2.04 |
| | 0.4 | 3804 | 930 | 2.14 |
| | 0.6 | 3734 | 966 | 2.22 |
| | 0.8 | 3502 | 1005 | 2.31 |
| | 1.0 | 3416 | 1042 | 2.39 |
| | 1.2 | 3255 | 1082 | 2.49 |
| | 1.4 | 3070 | 1135 | 2.61 |
| | 1.6 | 2883 | 1168 | 2.68 |
| | 1.8 | 2743 | 1199 | 2.75 |
| | 2.0 | 2669 | 1223 | 2.81 |
| T10 | 0.2 | 4016 | 912 | 2.23 |
| | 0.4 | 3936 | 952 | 2.33 |
| | 0.6 | 3878 | 987 | 2.41 |
| | 0.8 | 3659 | 1025 | 2.50 |
| | 1.0 | 3577 | 1060 | 2.59 |
| | 1.2 | 3443 | 1100 | 2.69 |
| | 1.4 | 3235 | 1150 | 2.81 |
| | 1.6 | 3020 | 1185 | 2.89 |
| | 1.8 | 2878 | 1215 | 2.97 |
| | 2.0 | 2786 | 1242 | 3.03 |

| Horizontal Flow | | | | |
|---|---|---|---|---|
| Speed Tap | ESP | CFM | RPM | BHP |
| T7** | 0.2 | 3805 | 695 | 1.24 |
| | 0.4 | 3702 | 740 | 1.32 |
| | 0.6 | 3604 | 785 | 1.40 |
| | 0.8 | 3490 | 833 | 1.49 |
| | 1.0 | 3390 | 879 | 1.57 |
| | 1.2 | 3220 | 935 | 1.67 |
| | 1.4 | 2939 | 1006 | 1.80 |
| | 1.6 | 2663 | 1072 | 1.91 |
| | 1.8 | 2474 | 1119 | 2.00 |
| | 2.0 | 2431 | 1134 | 2.03 |
| T8 | 0.2 | 4243 | 753 | 1.62 |
| | 0.4 | 4111 | 794 | 1.71 |
| | 0.6 | 4023 | 836 | 1.80 |
| | 0.8 | 3970 | 852 | 1.83 |
| | 1.0 | 3875 | 921 | 1.98 |
| | 1.2 | 3719 | 962 | 2.07 |
| | 1.4 | 3475 | 1030 | 2.22 |
| | 1.6 | 3204 | 1090 | 2.35 |
| | 1.8 | 3009 | 1171 | 2.52 |
| | 2.0 | 2852 | 1185 | 2.55 |
| T9 | 0.2 | 4392 | 774 | 1.78 |
| | 0.4 | 4274 | 814 | 1.87 |
| | 0.6 | 4186 | 857 | 1.97 |
| | 0.8 | 4133 | 864 | 1.98 |
| | 1.0 | 4050 | 934 | 2.15 |
| | 1.2 | 3912 | 974 | 2.24 |
| | 1.4 | 3695 | 1037 | 2.38 |
| | 1.6 | 3449 | 1089 | 2.50 |
| | 1.8 | 3265 | 1140 | 2.62 |
| | 2.0 | 3008 | 1205 | 2.77 |
| T10 | 0.2 | 4530 | 794 | 1.94 |
| | 0.4 | 4433 | 832 | 2.03 |
| | 0.6 | 4343 | 875 | 2.14 |
| | 0.8 | 4276 | 878 | 2.14 |
| | 1.0 | 4202 | 947 | 2.31 |
| | 1.2 | 4083 | 986 | 2.41 |
| | 1.4 | 3904 | 1045 | 2.55 |
| | 1.6 | 3697 | 1085 | 2.65 |
| | 1.8 | 3534 | 1128 | 2.75 |
| | 2.0 | 3172 | 1224 | 2.99 |

shaded speed tap - Gas heating airflow.
**(T1) (T2) and (T6)(T7) are part load only.

**12.5 Ton • 240 MBH Gas Heat Exchanger • Standard Static Direct Drive**
**Models: DHG1503DH, DHG1504DH, DHG1507DH**

| Down Flow | | | | |
|---|---|---|---|---|
| Speed Tap | ESP | CFM | RPM | BHP |
| T1** | 0.2 | 2377 | 559 | 0.52 |
| | 0.4 | - | - | - |
| | 0.6 | - | - | - |
| | 0.8 | - | - | - |
| T2** | 0.2 | 3178 | 662 | 0.93 |
| | 0.4 | 3007 | 705 | 0.99 |
| | 0.6 | 2856 | 751 | 1.05 |
| | 0.8 | 2533 | 822 | 1.16 |
| T3 | 0.2 | 3944 | 784 | 1.59 |
| | 0.4 | 3783 | 823 | 1.67 |
| | 0.6 | - | - | - |
| | 0.8 | - | - | - |
| T4 | 0.2 | 4435 | 842 | 2.08 |
| | 0.4 | 4287 | 886 | 2.19 |
| | 0.6 | 4153 | 922 | 2.28 |
| | 0.8 | 4025 | 952 | 2.36 |
| T5 | 0.2 | 4719 | 897 | 2.50 |
| | 0.4 | 4587 | 929 | 2.59 |
| | 0.6 | 4458 | 962 | 2.68 |
| | 0.8 | 4329 | 993 | 2.77 |
| T6** | 0.2 | 2227 | 538 | 0.45 |
| | 0.4 | - | - | - |
| | 0.6 | - | - | - |
| | 0.8 | - | - | - |
| T7** | 0.2 | 2737 | 611 | 0.70 |
| | 0.4 | 2580 | 667 | 0.77 |
| | 0.6 | 2368 | 726 | 0.83 |
| | 0.8 | 2085 | 795 | 0.91 |
| T8 | 0.2 | 3190 | 675 | 0.98 |
| | 0.4 | 3049 | 722 | 1.05 |
| | 0.6 | 2880 | 770 | 1.12 |
| | 0.8 | - | - | - |
| T9 | 0.2 | 3714 | 750 | 1.40 |
| | 0.4 | 3536 | 788 | 1.47 |
| | 0.6 | 3412 | 825 | 1.54 |
| | 0.8 | 3235 | 867 | 1.61 |
| T10 | 0.2 | 4133 | 809 | 1.84 |
| | 0.4 | 3953 | 848 | 1.93 |
| | 0.6 | 3812 | 881 | 2.00 |
| | 0.8 | 3676 | 912 | 2.07 |

| Horizontal Flow | | | | |
|---|---|---|---|---|
| Speed Tap | ESP | CFM | RPM | BHP |
| T1** | 0.2 | 2478 | 525 | 0.49 |
| | 0.4 | - | - | - |
| | 0.6 | - | - | - |
| | 0.8 | - | - | - |
| T2** | 0.2 | 3261 | 616 | 0.87 |
| | 0.4 | 3134 | 667 | 0.94 |
| | 0.6 | 3011 | 717 | 1.01 |
| | 0.8 | 2786 | 779 | 1.09 |
| T3 | 0.2 | 4019 | 720 | 1.46 |
| | 0.4 | 3926 | 756 | 1.53 |
| | 0.6 | 3807 | 805 | 1.63 |
| | 0.8 | - | - | - |
| T4 | 0.2 | 4484 | 786 | 1.95 |
| | 0.4 | 4364 | 830 | 2.05 |
| | 0.6 | 4287 | 863 | 2.14 |
| | 0.8 | 4194 | 899 | 2.23 |
| T5 | 0.2 | 4777 | 830 | 2.31 |
| | 0.4 | 4680 | 865 | 2.41 |
| | 0.6 | 4581 | 901 | 2.51 |
| | 0.8 | 4485 | 934 | 2.60 |
| T6** | 0.2 | 2330 | 508 | 0.43 |
| | 0.4 | - | - | - |
| | 0.6 | - | - | - |
| | 0.8 | - | - | - |
| T7** | 0.2 | 2831 | 568 | 0.65 |
| | 0.4 | 2655 | 616 | 0.71 |
| | 0.6 | 2547 | 689 | 0.79 |
| | 0.8 | 2325 | 759 | 0.87 |
| T8 | 0.2 | 3286 | 625 | 0.91 |
| | 0.4 | 3092 | 677 | 0.98 |
| | 0.6 | 2952 | 716 | 1.04 |
| | 0.8 | 2818 | 775 | 1.12 |
| T9 | 0.2 | 3833 | 695 | 1.29 |
| | 0.4 | 3618 | 737 | 1.37 |
| | 0.6 | 3479 | 771 | 1.44 |
| | 0.8 | 3366 | 825 | 1.54 |
| T10 | 0.2 | 4297 | 759 | 1.73 |
| | 0.4 | 4107 | 793 | 1.80 |
| | 0.6 | 3960 | 842 | 1.92 |
| | 0.8 | 3859 | 876 | 1.99 |

shaded speed tap - Gas heating airflow.
**(T1) (T2) and (T6)(T7) are part load only.

**12.5 Ton • 240 MBH Gas Heat Exchanger • Medium Static Direct Drive**
**Models: DHG1503LH, DHG1504LH, DHG1507LH**

| Down Flow | | | | |
|---|---|---|---|---|
| **Speed Tap** | **ESP** | **CFM** | **RPM** | **BHP** |
| **T1**** | 0.2 | 2377 | 559 | 0.52 |
| | 0.4 | - | - | - |
| | 0.6 | - | - | - |
| | 0.8 | - | - | - |
| | 1.0 | - | - | - |
| | 1.2 | - | - | - |
| | 1.4 | - | - | - |
| **T2**** | 0.2 | 3655 | 740 | 1.32 |
| | 0.4 | 3495 | 782 | 1.40 |
| | 0.6 | 3361 | 820 | 1.46 |
| | 0.8 | 3231 | 857 | 1.53 |
| | 1.0 | 2967 | 915 | 1.63 |
| | 1.2 | 2685 | 969 | 1.73 |
| | 1.4 | 2550 | 1001 | 1.79 |
| **T3** | 0.2 | 3944 | 784 | 1.59 |
| | 0.4 | 3783 | 823 | 1.67 |
| | 0.6 | - | - | - |
| | 0.8 | - | - | - |
| | 1.0 | - | - | - |
| | 1.2 | - | - | - |
| | 1.4 | - | - | - |
| **T4** | 0.2 | 4536 | 878 | 2.30 |
| | 0.4 | 4407 | 910 | 2.38 |
| | 0.6 | 4304 | 939 | 2.46 |
| | 0.8 | 4176 | 974 | 2.55 |
| | 1.0 | 4066 | 1004 | 2.63 |
| | 1.2 | 3946 | 1036 | 2.71 |
| | 1.4 | 3826 | 1067 | 2.79 |
| **T5** | 0.2 | 4719 | 897 | 2.50 |
| | 0.4 | 4587 | 929 | 2.59 |
| | 0.6 | 4458 | 962 | 2.68 |
| | 0.8 | 4329 | 993 | 2.77 |
| | 1.0 | 4211 | 1025 | 2.86 |
| | 1.2 | 4087 | 1057 | 2.94 |
| | 1.4 | 3975 | 1087 | 3.03 |
| **T6**** | 0.2 | 2669 | 601 | 0.66 |
| | 0.4 | 2504 | 659 | 0.73 |
| | 0.6 | 2287 | 719 | 0.79 |
| | 0.8 | - | - | - |
| | 1.0 | - | - | - |
| | 1.2 | - | - | - |
| | 1.4 | - | - | - |
| **T7**** | 0.2 | 3310 | 692 | 1.06 |
| | 0.4 | 3163 | 736 | 1.13 |
| | 0.6 | 3006 | 782 | 1.20 |
| | 0.8 | 2765 | 840 | 1.29 |
| | 1.0 | 2540 | 894 | 1.37 |
| | 1.2 | 2390 | 935 | 1.44 |
| | 1.4 | 2163 | 988 | 1.52 |
| **T8** | 0.2 | 3834 | 767 | 1.51 |
| | 0.4 | 3647 | 805 | 1.59 |
| | 0.6 | 3528 | 839 | 1.65 |
| | 0.8 | 3369 | 876 | 1.73 |
| | 1.0 | 3183 | 923 | 1.82 |
| | 1.2 | 3149 | 962 | 1.90 |
| | 1.4 | - | - | - |
| **T9** | 0.2 | 4218 | 823 | 1.96 |
| | 0.4 | 4046 | 860 | 2.05 |
| | 0.6 | 3902 | 895 | 2.13 |
| | 0.8 | 3774 | 927 | 2.21 |
| | 1.0 | 3631 | 963 | 2.29 |
| | 1.2 | 3485 | 1000 | 2.38 |
| | 1.4 | 3327 | 1032 | 2.46 |
| **T10** | 0.2 | 4537 | 901 | 2.51 |
| | 0.4 | 4382 | 931 | 2.59 |
| | 0.6 | 4251 | 961 | 2.68 |
| | 0.8 | 4142 | 989 | 2.75 |
| | 1.0 | 4026 | 1019 | 2.84 |
| | 1.2 | 3906 | 1046 | 2.91 |
| | 1.4 | 3763 | 1078 | 3.00 |

| Horizontal Flow | | | | |
|---|---|---|---|---|
| **Speed Tap** | **ESP** | **CFM** | **RPM** | **BHP** |
| **T1**** | 0.2 | 2478 | 525 | 0.49 |
| | 0.4 | - | - | - |
| | 0.6 | - | - | - |
| | 0.8 | - | - | - |
| | 1.0 | - | - | - |
| | 1.2 | - | - | - |
| | 1.4 | - | - | - |
| **T2**** | 0.2 | 3743 | 682 | 1.22 |
| | 0.4 | 3661 | 715 | 1.28 |
| | 0.6 | 3519 | 772 | 1.38 |
| | 0.8 | 3457 | 814 | 1.45 |
| | 1.0 | 3294 | 858 | 1.53 |
| | 1.2 | 3051 | 924 | 1.65 |
| | 1.4 | 2667 | 995 | 1.78 |
| **T3** | 0.2 | 4019 | 720 | 1.46 |
| | 0.4 | 3926 | 756 | 1.53 |
| | 0.6 | 3807 | 805 | 1.63 |
| | 0.8 | - | - | - |
| | 1.0 | - | - | - |
| | 1.2 | - | - | - |
| | 1.4 | - | - | - |
| **T4** | 0.2 | 4609 | 807 | 2.11 |
| | 0.4 | 4517 | 843 | 2.21 |
| | 0.6 | 4424 | 882 | 2.31 |
| | 0.8 | 4323 | 915 | 2.40 |
| | 1.0 | 4216 | 951 | 2.49 |
| | 1.2 | 4115 | 989 | 2.59 |
| | 1.4 | 4010 | 1025 | 2.68 |
| **T5** | 0.2 | 4777 | 830 | 2.31 |
| | 0.4 | 4680 | 865 | 2.41 |
| | 0.6 | 4581 | 901 | 2.51 |
| | 0.8 | 4485 | 934 | 2.60 |
| | 1.0 | 4387 | 970 | 2.70 |
| | 1.2 | 4285 | 1005 | 2.80 |
| | 1.4 | 4184 | 1039 | 2.89 |
| **T6**** | 0.2 | 2763 | 560 | 0.62 |
| | 0.4 | 2565 | 596 | 0.66 |
| | 0.6 | 2469 | 685 | 0.76 |
| | 0.8 | 2212 | 756 | 0.83 |
| | 1.0 | - | - | - |
| | 1.2 | - | - | - |
| | 1.4 | - | - | - |
| **T7**** | 0.2 | 3409 | 640 | 0.98 |
| | 0.4 | 3206 | 690 | 1.06 |
| | 0.6 | 3073 | 727 | 1.12 |
| | 0.8 | 2943 | 785 | 1.21 |
| | 1.0 | 2731 | 823 | 1.26 |
| | 1.2 | 2519 | 873 | 1.34 |
| | 1.4 | 2284 | 938 | 1.44 |
| **T8** | 0.2 | 3963 | 713 | 1.40 |
| | 0.4 | 3752 | 752 | 1.48 |
| | 0.6 | 3607 | 787 | 1.55 |
| | 0.8 | 3497 | 839 | 1.65 |
| | 1.0 | 3398 | 881 | 1.74 |
| | 1.2 | 3217 | 925 | 1.8 |
| | 1.4 | 3004 | 994 | 2.0 |
| **T9** | 0.2 | 4404 | 775 | 1.84 |
| | 0.4 | 4224 | 807 | 1.92 |
| | 0.6 | 4087 | 852 | 2.03 |
| | 0.8 | 3989 | 888 | 2.11 |
| | 1.0 | 3865 | 925 | 2.20 |
| | 1.2 | 3723 | 963 | 2.29 |
| | 1.4 | 3608 | 999 | 2.38 |
| **T10** | 0.2 | 4777 | 830 | 2.31 |
| | 0.4 | 5442 | 854 | 2.38 |
| | 0.6 | 4581 | 901 | 2.51 |
| | 0.8 | 4322 | 934 | 2.60 |
| | 1.0 | 4387 | 970 | 2.70 |
| | 1.2 | 4080 | 1002 | 2.79 |
| | 1.4 | 3916 | 1037 | 2.89 |

shaded speed tap - Gas heating airflow.
**(T1) (T2) and (T6)(T7) are part load only.

**12.5 Ton • 240 MBH Gas Heat Exchanger • High Static Direct Drive**
**Models: DHG1503WH, DHG1504WH, DHG1507WH**

| Down Flow | | | | |
|---|---|---|---|---|
| Speed Tap | ESP | CFM | RPM | BHP |
| T1** | 0.2 | 2511 | 639 | 0.63 |
| | 0.4 | - | - | - |
| | 0.6 | - | - | - |
| | 0.8 | - | - | - |
| | 1.0 | - | - | - |
| | 1.2 | - | - | - |
| | 1.4 | - | - | - |
| | 1.6 | - | - | - |
| | 1.8 | - | - | - |
| | 2.0 | - | - | - |
| T2** | 0.2 | 3737 | 894 | 1.97 |
| | 0.4 | 3699 | 919 | 2.03 |
| | 0.6 | 3604 | 952 | 2.10 |
| | 0.8 | 3476 | 990 | 2.18 |
| | 1.0 | 3276 | 1035 | 2.28 |
| | 1.2 | 3052 | 1082 | 2.38 |
| | 1.4 | 2890 | 1120 | 2.47 |
| | 1.6 | 2738 | 1154 | 2.54 |
| | 1.8 | 2584 | 1186 | 2.61 |
| | 2.0 | 2499 | 1207 | 2.66 |
| T3 | 0.2 | 3953 | 863 | 1.80 |
| | 0.4 | 3837 | 903 | 1.88 |
| | 0.6 | - | - | - |
| | 0.8 | - | - | - |
| | 1.0 | - | - | - |
| | 1.2 | - | - | - |
| | 1.4 | - | - | - |
| | 1.6 | - | - | - |
| | 1.8 | - | - | - |
| | 2.0 | - | - | - |
| T4 | 0.2 | 4964 | 1024 | 3.47 |
| | 0.4 | 4909 | 1046 | 3.55 |
| | 0.6 | 4808 | 1079 | 3.66 |
| | 0.8 | 4764 | 1096 | 3.72 |
| | 1.0 | 4626 | 1123 | 3.81 |
| | 1.2 | 4507 | 1167 | 3.96 |
| | 1.4 | 4409 | 1207 | 4.10 |
| | 1.6 | 4137 | 1257 | 4.26 |
| | 1.8 | 3878 | 1311 | 4.45 |
| | 2.0 | 3835 | 1332 | 4.52 |
| T5 | 0.2 | 5128 | 1078 | 3.88 |
| | 0.4 | 5061 | 1102 | 3.96 |
| | 0.6 | 4965 | 1131 | 4.07 |
| | 0.8 | 4899 | 1154 | 4.15 |
| | 1.0 | 4779 | 1182 | 4.25 |
| | 1.2 | 4668 | 1214 | 4.37 |
| | 1.4 | 4583 | 1242 | 4.47 |
| | 1.6 | 4367 | 1283 | 4.61 |
| | 1.8 | 4137 | 1330 | 4.78 |
| | 2.0 | 4015 | 1356 | 4.88 |
| T6** | 0.2 | 2833 | 703 | 0.97 |
| | 0.4 | 2651 | 764 | 1.05 |
| | 0.6 | 2386 | 815 | 1.12 |
| | 0.8 | 2266 | 858 | 1.18 |
| | 1.0 | - | - | - |
| | 1.2 | - | - | - |
| | 1.4 | - | - | - |
| | 1.6 | - | - | - |
| | 1.8 | - | - | - |
| | 2.0 | - | - | - |

| Horizontal Flow | | | | |
|---|---|---|---|---|
| Speed Tap | ESP | CFM | RPM | BHP |
| T1** | 0.2 | 2735 | 543 | 0.54 |
| | 0.4 | 2600 | 606 | 0.60 |
| | 0.6 | - | - | - |
| | 0.8 | - | - | - |
| | 1.0 | - | - | - |
| | 1.2 | - | - | - |
| | 1.4 | - | - | - |
| | 1.6 | - | - | - |
| | 1.8 | - | - | - |
| | 2.0 | - | - | - |
| T2** | 0.2 | - | - | - |
| | 0.4 | 4168 | 801 | 1.76 |
| | 0.6 | 4081 | 844 | 1.86 |
| | 0.8 | 4030 | 856 | 1.89 |
| | 1.0 | 3939 | 926 | 2.04 |
| | 1.2 | 3789 | 966 | 2.13 |
| | 1.4 | 3553 | 1033 | 2.27 |
| | 1.6 | 3290 | 1090 | 2.40 |
| | 1.8 | 3097 | 1158 | 2.55 |
| | 2.0 | 2906 | 1192 | 2.63 |
| T3 | 0.2 | 4165 | 735 | 1.53 |
| | 0.4 | 4089 | 772 | 1.61 |
| | 0.6 | 3985 | 824 | 1.72 |
| | 0.8 | - | - | - |
| | 1.0 | - | - | - |
| | 1.2 | - | - | - |
| | 1.4 | - | - | - |
| | 1.6 | - | - | - |
| | 1.8 | - | - | - |
| | 2.0 | - | - | - |
| T4 | 0.2 | - | - | - |
| | 0.4 | 5215 | 918 | 3.12 |
| | 0.6 | 5121 | 951 | 3.23 |
| | 0.8 | 5044 | 979 | 3.32 |
| | 1.0 | 4957 | 1015 | 3.44 |
| | 1.2 | 4861 | 1040 | 3.53 |
| | 1.4 | 4769 | 1082 | 3.67 |
| | 1.6 | 4665 | 1099 | 3.73 |
| | 1.8 | 4563 | 1150 | 3.90 |
| | 2.0 | 4455 | 1181 | 4.01 |
| T5 | 0.2 | 5478 | 900 | 3.05 |
| | 0.4 | 5390 | 936 | 3.17 |
| | 0.6 | 5309 | 971 | 3.29 |
| | 0.8 | 5216 | 1003 | 3.40 |
| | 1.0 | 5127 | 1036 | 3.52 |
| | 1.2 | 5046 | 1067 | 3.62 |
| | 1.4 | 4954 | 1096 | 3.72 |
| | 1.6 | 4872 | 1128 | 3.83 |
| | 1.8 | 4794 | 1156 | 3.92 |
| | 2.0 | 4681 | 1188 | 4.03 |
| T6** | 0.2 | 3259 | 621 | 0.86 |
| | 0.4 | 3169 | 667 | 0.92 |
| | 0.6 | 3032 | 726 | 1.00 |
| | 0.8 | 2769 | 805 | 1.11 |
| | 1.0 | 2588 | 852 | 1.17 |
| | 1.2 | 2383 | 918 | 1.27 |
| | 1.4 | 2201 | 973 | 1.34 |
| | 1.6 | - | - | - |
| | 1.8 | - | - | - |
| | 2.0 | - | - | - |

shaded speed tap - Gas heating airflow.
**(T1) (T2) and (T6)(T7) are part load only.

**12.5 Ton • 240 MBH Gas Heat Exchanger • High Static Direct Drive**
**Models: DHG1503WH, DHG1504WH, DHG1507WH**

| Down Flow | | | | |
|---|---|---|---|---|
| Speed Tap | ESP | CFM | RPM | BHP |
| T7** | 0.2 | 3533 | 825 | 1.62 |
| | 0.4 | 3449 | 875 | 1.72 |
| | 0.6 | 3322 | 916 | 1.80 |
| | 0.8 | 3103 | 957 | 1.88 |
| | 1.0 | 2969 | 997 | 1.96 |
| | 1.2 | 2734 | 1037 | 2.04 |
| | 1.4 | 2605 | 1092 | 2.14 |
| | 1.6 | 2492 | 1115 | 2.19 |
| | 1.8 | 2340 | 1151 | 2.26 |
| | 2.0 | 2281 | 1174 | 2.31 |
| T8 | 0.2 | 3830 | 878 | 1.97 |
| | 0.4 | 3757 | 922 | 2.07 |
| | 0.6 | 3682 | 959 | 2.16 |
| | 0.8 | 3448 | 999 | 2.25 |
| | 1.0 | 3358 | 1036 | 2.33 |
| | 1.2 | 3188 | 1076 | 2.42 |
| | 1.4 | 3011 | 1130 | 2.54 |
| | 1.6 | 2835 | 1162 | 2.61 |
| | 1.8 | - | - | - |
| | 2.0 | - | - | - |
| T9 | 0.2 | 4169 | 940 | 2.45 |
| | 0.4 | 4075 | 977 | 2.55 |
| | 0.6 | 4019 | 1009 | 2.63 |
| | 0.8 | 3828 | 1046 | 2.73 |
| | 1.0 | 3739 | 1080 | 2.82 |
| | 1.2 | 3628 | 1119 | 2.92 |
| | 1.4 | 3405 | 1164 | 3.04 |
| | 1.6 | 3171 | 1200 | 3.13 |
| | 1.8 | 3021 | 1230 | 3.21 |
| | 2.0 | 2903 | 1262 | 3.30 |
| T10 | 0.2 | 4464 | 995 | 2.96 |
| | 0.4 | 4325 | 1025 | 3.05 |
| | 0.6 | 4238 | 1053 | 3.13 |
| | 0.8 | 4143 | 1088 | 3.23 |
| | 1.0 | 4001 | 1118 | 3.32 |
| | 1.2 | 3910 | 1155 | 3.43 |
| | 1.4 | 3708 | 1187 | 3.53 |
| | 1.6 | 3493 | 1213 | 3.60 |
| | 1.8 | 3312 | 1251 | 3.72 |
| | 2.0 | 3137 | 1299 | 3.86 |

| Horizontal Flow | | | | |
|---|---|---|---|---|
| Speed Tap | ESP | CFM | RPM | BHP |
| T7** | 0.2 | - | - | - |
| | 0.4 | - | - | - |
| | 0.6 | 3807 | 809 | 1.59 |
| | 0.8 | 3732 | 839 | 1.65 |
| | 1.0 | 3619 | 905 | 1.78 |
| | 1.2 | 3443 | 950 | 1.87 |
| | 1.4 | 3180 | 1019 | 2.00 |
| | 1.6 | 2905 | 1084 | 2.13 |
| | 1.8 | 2709 | 1161 | 2.28 |
| | 2.0 | 2647 | 1160 | 2.28 |
| T8 | 0.2 | 4345 | 768 | 1.73 |
| | 0.4 | 4221 | 808 | 1.82 |
| | 0.6 | 4134 | 850 | 1.91 |
| | 0.8 | 4082 | 860 | 1.93 |
| | 1.0 | 3995 | 930 | 2.09 |
| | 1.2 | 3851 | 970 | 2.18 |
| | 1.4 | 3624 | 1035 | 2.33 |
| | 1.6 | 3368 | 1090 | 2.45 |
| | 1.8 | 3179 | 1148 | 2.58 |
| | 2.0 | 2956 | 1199 | 2.70 |
| T9 | 0.2 | 4675 | 815 | 2.13 |
| | 0.4 | 4607 | 850 | 2.22 |
| | 0.6 | 4514 | 895 | 2.34 |
| | 0.8 | 4421 | 896 | 2.34 |
| | 1.0 | 4355 | 962 | 2.51 |
| | 1.2 | 4255 | 1001 | 2.61 |
| | 1.4 | 4126 | 1052 | 2.75 |
| | 1.6 | 3975 | 1077 | 2.81 |
| | 1.8 | 3843 | 1128 | 2.95 |
| | 2.0 | 3566 | 1206 | 3.15 |
| T10 | 0.2 | 4935 | 851 | 2.53 |
| | 0.4 | 4889 | 876 | 2.61 |
| | 0.6 | 4793 | 927 | 2.76 |
| | 0.8 | 4667 | 943 | 2.80 |
| | 1.0 | 4603 | 993 | 2.95 |
| | 1.2 | 4527 | 1028 | 3.06 |
| | 1.4 | 4465 | 1067 | 3.17 |
| | 1.6 | 4399 | 1067 | 3.17 |
| | 1.8 | 4327 | 1145 | 3.40 |
| | 2.0 | 4181 | 1168 | 3.47 |

shaded speed tap - Gas heating airflow.
**(T1) (T2) and (T6)(T7) are part load only.

**7.5 Ton MODELS : DHG0903D, DHG0904D & DHG0907D with DDC Controls • Standard Static to 2.4 HP (0.2 ~ 0.8 Esp) • Down Flow**

| CFM | 0.2 | | | 0.4 | | | 0.6 | | | 0.8 | | | 1.0 | | |
|---|---|---|---|---|---|---|---|---|---|---|---|---|---|---|---|
| | RPM | DDC % | BHP | RPM | DDC % | BHP | RPM | DDC % | BHP | RPM | DDC % | BHP | RPM | DDC % | BHP |
| **1800** | 519 | 22 | 0.39 | 584 | 24 | 0.50 | 643 | 26 | 0.55 | 717 | 27 | 0.73 | - | - | - |
| **2000** | 554 | 26 | 0.46 | 618 | 27 | 0.58 | 676 | 29 | 0.63 | 747 | 31 | 0.84 | - | - | - |
| **2200** | 589 | 29 | 0.53 | 653 | 31 | 0.69 | 709 | 33 | 0.72 | 777 | 35 | 0.97 | - | - | - |
| **2400** | 624 | 33 | 0.63 | 687 | 35 | 0.81 | 743 | 37 | 0.83 | 807 | 39 | 1.11 | - | - | - |
| **2600** | 659 | 36 | 0.74 | 721 | 38 | 0.95 | 776 | 40 | 0.96 | 838 | 42 | 1.28 | - | - | - |
| **2800** | 693 | 40 | 0.86 | 756 | 42 | 1.11 | 809 | 44 | 1.10 | 868 | 46 | 1.47 | - | - | - |
| **3000** | 728 | 43 | 1.01 | 790 | 46 | 1.30 | 842 | 48 | 1.26 | 898 | 50 | 1.69 | - | - | - |
| **3200** | 763 | 47 | 1.19 | 824 | 49 | 1.53 | 875 | 51 | 1.45 | 928 | 53 | 1.94 | - | - | - |
| **3400** | 798 | 50 | 1.40 | 859 | 53 | 1.79 | 908 | 55 | 1.67 | 959 | 57 | 2.24 | - | - | - |
| **3600** | 833 | 53 | 1.64 | 893 | 57 | 2.10 | 941 | 59 | 1.92 | | | | - | - | - |

Shaded area indicates air flow below 2250 SCFM (300 SCFM/ton) that is not recommended for High Stage cooling or heating.
Valid motor operating range for DDC% setting is 20 - 90.

**HORIZONTAL FLOW**

| CFM | 0.2 | | | 0.4 | | | 0.6 | | | 0.8 | | | 1.0 | | |
|---|---|---|---|---|---|---|---|---|---|---|---|---|---|---|---|
| | RPM | DDC % | BHP | RPM | DDC % | BHP | RPM | DDC % | BHP | RPM | DDC % | BHP | RPM | DDC % | BHP |
| **1800** | 456 | 21 | 0.31 | 541 | 22 | 0.38 | 610 | 23 | 0.50 | 684 | 25 | 0.57 | - | - | - |
| **2000** | 486 | 24 | 0.37 | 568 | 25 | 0.44 | 636 | 27 | 0.58 | 706 | 29 | 0.64 | - | - | - |
| **2200** | 516 | 27 | 0.43 | 595 | 29 | 0.50 | 661 | 30 | 0.66 | 729 | 32 | 0.72 | - | - | - |
| **2400** | 546 | 31 | 0.51 | 622 | 32 | 0.58 | 687 | 34 | 0.76 | 751 | 36 | 0.81 | - | - | - |
| **2600** | 576 | 34 | 0.59 | 649 | 36 | 0.67 | 712 | 38 | 0.88 | 774 | 39 | 0.91 | - | - | - |
| **2800** | 606 | 38 | 0.70 | 676 | 39 | 0.77 | 737 | 41 | 1.01 | 796 | 43 | 1.03 | - | - | - |
| **3000** | 636 | 41 | 0.82 | 703 | 43 | 0.88 | 763 | 45 | 1.16 | 818 | 47 | 1.16 | - | - | - |
| **3200** | 666 | 45 | 0.96 | 730 | 46 | 1.02 | 788 | 48 | 1.33 | 841 | 50 | 1.31 | - | - | - |
| **3400** | 696 | 48 | 1.13 | 757 | 50 | 1.17 | 814 | 52 | 1.53 | 863 | 54 | 1.48 | - | - | - |
| **3600** | 726 | 52 | 1.32 | 784 | 53 | 1.34 | 839 | 55 | 1.76 | 886 | 57 | 1.66 | - | - | - |
| **3800** | 756 | 55 | 1.55 | 811 | 57 | 1.55 | 865 | 59 | 2.03 | 908 | 61 | 1.88 | - | - | - |

Shaded area indicates air flow below 2250 SCFM (300 SCFM/ton) that is not recommended for High Stage cooling or heating.
Valid motor operating range for DDC% setting is 20 - 90.

**7.5 Ton Models : DHG0903L, DHG0904L & DHG0907Lwith DDC Controls • Medium Static to 2.4 HP (0.2 ~ 1.4 ESP) • Down Flow**

| CFM | 0.2 | | | 0.4 | | | 0.6 | | | 0.8 | | | 1.0 | | |
|---|---|---|---|---|---|---|---|---|---|---|---|---|---|---|---|
| | RPM | DDC % | BHP | RPM | DDC % | BHP | RPM | DDC % | BHP | RPM | DDC % | BHP | RPM | DDC % | BHP |
| **1400** | 449 | 16 | 0.28 | 516 | 17 | 0.36 | 577 | 18 | 0.41 | 656 | 20 | 0.55 | 742 | 24 | 0.66 |
| **1600** | 484 | 19 | 0.33 | 550 | 20 | 0.42 | 610 | 22 | 0.47 | 686 | 24 | 0.63 | 767 | 27 | 0.73 |
| **1800** | 519 | 22 | 0.39 | 584 | 24 | 0.50 | 643 | 26 | 0.55 | 717 | 27 | 0.73 | 793 | 31 | 0.80 |
| **2000** | 554 | 26 | 0.46 | 618 | 27 | 0.58 | 676 | 29 | 0.63 | 747 | 31 | 0.84 | 818 | 34 | 0.89 |
| **2200** | 589 | 29 | 0.53 | 653 | 31 | 0.69 | 709 | 33 | 0.72 | 777 | 35 | 0.97 | 844 | 38 | 0.98 |
| **2400** | 624 | 33 | 0.63 | 687 | 35 | 0.81 | 743 | 37 | 0.83 | 807 | 39 | 1.11 | 869 | 41 | 1.08 |
| **2600** | 659 | 36 | 0.74 | 721 | 38 | 0.95 | 776 | 40 | 0.96 | 838 | 42 | 1.28 | 895 | 45 | 1.20 |
| **2800** | 693 | 40 | 0.86 | 756 | 42 | 1.11 | 809 | 44 | 1.10 | 868 | 46 | 1.47 | 920 | 48 | 1.32 |
| **3000** | 728 | 43 | 1.01 | 790 | 46 | 1.30 | 842 | 48 | 1.26 | 898 | 50 | 1.69 | 946 | 52 | 1.46 |
| **3200** | 763 | 47 | 1.19 | 824 | 49 | 1.53 | 875 | 51 | 1.45 | 928 | 53 | 1.94 | 971 | 55 | 1.62 |
| **3400** | 798 | 50 | 1.40 | 859 | 53 | 1.79 | 908 | 55 | 1.67 | 959 | 57 | 2.24 | 997 | 58 | 1.79 |
| **3600** | 833 | 53 | 1.64 | 893 | 57 | 2.10 | 941 | 59 | 1.92 | 989 | 61 | 2.57 | 1022 | 62 | 1.97 |
| **3800** | 868 | 57 | 1.92 | 927 | 60 | 2.47 | 975 | 62 | 2.21 | 1019 | 63 | 2.96 | | | |

THE TABLES ARE PROVIDED FOR REFERENCE ONLY TO SHOW DDC CONTROL SETTINGS RELATIONSHIP TO UNIT CFM. BLOWER SPEED SETTINGS MUST BE SET TO MEET THE MINIMUM REQUIRED CFM OF THEIR STAGES.

## DOWNFLOW

| CFM | 1.2 | | | 1.4 | | | 1.6 | | | 1.8 | | | 2.0 | | |
|---|---|---|---|---|---|---|---|---|---|---|---|---|---|---|---|
| | RPM | DDC % | BHP | RPM | DDC % | BHP | RPM | DDC % | BHP | RPM | DDC % | BHP | RPM | DDC % | BHP |
| 1400 | 853 | 27 | 0.87 | 853 | 29 | 0.96 | - | - | - | - | - | - | - | - | - |
| 1600 | 871 | 30 | 0.96 | 876 | 32 | 1.04 | - | - | - | - | - | - | - | - | - |
| 1800 | 890 | 34 | 1.06 | 899 | 36 | 1.12 | - | - | - | - | - | - | - | - | - |
| 2000 | 908 | 37 | 1.17 | 922 | 39 | 1.22 | - | - | - | - | - | - | - | - | - |
| 2200 | 926 | 40 | 1.30 | 945 | 42 | 1.32 | - | - | - | - | - | - | - | - | - |
| 2400 | 945 | 44 | 1.43 | 968 | 46 | 1.43 | - | - | - | - | - | - | - | - | - |
| 2600 | 963 | 47 | 1.58 | 991 | 49 | 1.55 | - | - | - | - | - | - | - | - | - |
| 2800 | 981 | 50 | 1.75 | 1015 | 53 | 1.68 | - | - | - | - | - | - | - | - | - |
| 3000 | 1000 | 54 | 1.94 | 1038 | 56 | 1.82 | - | - | - | - | - | - | - | - | - |
| 3200 | 1018 | 57 | 2.14 | 1061 | 59 | 1.97 | - | - | - | - | - | - | - | - | - |
| 3400 | 1036 | 61 | 2.36 | 1084 | 63 | 2.13 | - | - | - | - | - | - | - | - | - |
| 3600 | 1055 | 63 | 2.61 | | | | - | - | - | - | - | - | - | - | - |
| 3800 | | | | | | | - | - | - | - | - | - | - | - | - |

Shaded area indicates air flow below 2250 SCFM (300 SCFM/ton) that is not recommended for High Stage cooling or heating.
Valid motor operating range for DDC% setting is 20 - 90.

## HORIZONTAL FLOW

| CFM | 0.2 | | | 0.4 | | | 0.6 | | | 0.8 | | | 1.0 | | |
|---|---|---|---|---|---|---|---|---|---|---|---|---|---|---|---|
| | RPM | DDC % | BHP | RPM | DDC % | BHP | RPM | DDC % | BHP | RPM | DDC % | BHP | RPM | DDC % | BHP |
| 1400 | 396 | 14 | 0.23 | 487 | 15 | 0.29 | 559 | 16 | 0.38 | 639 | 18 | 0.44 | 702 | 21 | 0.58 |
| 1600 | 426 | 17 | 0.27 | 514 | 18 | 0.33 | 585 | 20 | 0.44 | 661 | 22 | 0.50 | 724 | 25 | 0.64 |
| 1800 | 456 | 21 | 0.31 | 541 | 22 | 0.38 | 610 | 23 | 0.50 | 684 | 25 | 0.57 | 745 | 28 | 0.70 |
| 2000 | 486 | 24 | 0.37 | 568 | 25 | 0.44 | 636 | 27 | 0.58 | 706 | 29 | 0.64 | 766 | 31 | 0.78 |
| 2200 | 516 | 27 | 0.43 | 595 | 29 | 0.50 | 661 | 30 | 0.66 | 729 | 32 | 0.72 | 787 | 35 | 0.86 |
| 2400 | 546 | 31 | 0.51 | 622 | 32 | 0.58 | 687 | 34 | 0.76 | 751 | 36 | 0.81 | 809 | 38 | 0.95 |
| 2600 | 576 | 34 | 0.59 | 649 | 36 | 0.67 | 712 | 38 | 0.88 | 774 | 39 | 0.91 | 830 | 42 | 1.05 |
| 2800 | 606 | 38 | 0.70 | 676 | 39 | 0.77 | 737 | 41 | 1.01 | 796 | 43 | 1.03 | 851 | 45 | 1.16 |
| 3000 | 636 | 41 | 0.82 | 703 | 43 | 0.88 | 763 | 45 | 1.16 | 818 | 47 | 1.16 | 872 | 49 | 1.28 |
| 3200 | 666 | 45 | 0.96 | 730 | 46 | 1.02 | 788 | 48 | 1.33 | 841 | 50 | 1.31 | 894 | 52 | 1.41 |
| 3400 | 696 | 48 | 1.13 | 757 | 50 | 1.17 | 814 | 52 | 1.53 | 863 | 54 | 1.48 | 915 | 55 | 1.56 |
| 3600 | 726 | 52 | 1.32 | 784 | 53 | 1.34 | 839 | 55 | 1.76 | 886 | 57 | 1.66 | 936 | 59 | 1.73 |
| 3800 | 756 | 55 | 1.55 | 811 | 57 | 1.55 | 865 | 59 | 2.03 | 908 | 61 | 1.88 | 957 | 62 | 1.91 |
| CFM | 1.2 | | | 1.4 | | | 1.6 | | | 1.8 | | | 2.0 | | |
| | RPM | DDC % | BHP | RPM | DDC % | BHP | RPM | DDC % | BHP | RPM | DDC % | BHP | RPM | DDC % | BHP |
| 1400 | 754 | 25 | 0.85 | 825 | 27 | 0.93 | - | - | - | - | - | - | - | - | - |
| 1600 | 774 | 28 | 0.93 | 843 | 30 | 1.01 | - | - | - | - | - | - | - | - | - |
| 1800 | 795 | 31 | 1.03 | 862 | 34 | 1.10 | - | - | - | - | - | - | - | - | - |
| 2000 | 816 | 34 | 1.14 | 880 | 37 | 1.19 | - | - | - | - | - | - | - | - | - |
| 2200 | 836 | 38 | 1.26 | 898 | 40 | 1.29 | - | - | - | - | - | - | - | - | - |
| 2400 | 857 | 41 | 1.39 | 917 | 43 | 1.39 | - | - | - | - | - | - | - | - | - |
| 2600 | 878 | 44 | 1.54 | 935 | 46 | 1.51 | - | - | - | - | - | - | - | - | - |
| 2800 | 899 | 48 | 1.70 | 954 | 50 | 1.64 | - | - | - | - | - | - | - | - | - |
| 3000 | 919 | 51 | 1.88 | 972 | 53 | 1.77 | - | - | - | - | - | - | - | - | - |
| 3200 | 940 | 54 | 2.08 | 990 | 56 | 1.92 | - | - | - | - | - | - | - | - | - |
| 3400 | 961 | 57 | 2.30 | 1009 | 59 | 2.08 | - | - | - | - | - | - | - | - | - |
| 3600 | 981 | 61 | 2.54 | 1027 | 62 | 2.25 | - | - | - | - | - | - | - | - | - |
| 3800 | 1002 | 63 | 2.81 | | | | - | - | - | - | - | - | - | - | - |

Shaded area indicates air flow below 2250 SCFM (300 SCFM/ton) that is not recommended for High Stage cooling or heating.
Valid motor operating range for DDC% setting is 20 - 90.

**7.5 Ton Models : DHG0903W,DHG0904W & DHG0907W with DDC Controls • High Static to 3.5 HP (0.2 ~ 2.0 ESP) • Down Flow**

| CFM | 0.2 | | | 0.4 | | | 0.6 | | | 0.8 | | | 1.0 | | |
|---|---|---|---|---|---|---|---|---|---|---|---|---|---|---|---|
| | RPM | DDC % | BHP | RPM | DDC % | BHP | RPM | DDC % | BHP | RPM | DDC % | BHP | RPM | DDC % | BHP |
| 1800 | 519 | 22 | 0.39 | 584 | 24 | 0.50 | 643 | 26 | 0.55 | 717 | 27 | 0.73 | 793 | 31 | 0.80 |
| 2000 | 554 | 26 | 0.46 | 618 | 27 | 0.58 | 676 | 29 | 0.63 | 747 | 31 | 0.84 | 818 | 34 | 0.89 |
| 2200 | 589 | 29 | 0.53 | 653 | 31 | 0.69 | 709 | 33 | 0.72 | 777 | 35 | 0.97 | 844 | 38 | 0.98 |
| 2400 | 624 | 33 | 0.63 | 687 | 35 | 0.81 | 743 | 37 | 0.83 | 807 | 39 | 1.11 | 869 | 41 | 1.08 |
| 2600 | 659 | 36 | 0.74 | 721 | 38 | 0.95 | 776 | 40 | 0.96 | 838 | 42 | 1.28 | 895 | 45 | 1.20 |
| 2800 | 693 | 40 | 0.86 | 756 | 42 | 1.11 | 809 | 44 | 1.10 | 868 | 46 | 1.47 | 920 | 48 | 1.32 |
| 3000 | 728 | 43 | 1.01 | 790 | 46 | 1.30 | 842 | 48 | 1.26 | 898 | 50 | 1.69 | 946 | 52 | 1.46 |
| 3200 | 763 | 47 | 1.19 | 824 | 49 | 1.53 | 875 | 51 | 1.45 | 928 | 53 | 1.94 | 971 | 55 | 1.62 |
| 3400 | 798 | 50 | 1.40 | 859 | 53 | 1.79 | 908 | 55 | 1.67 | 959 | 57 | 2.24 | 997 | 58 | 1.79 |
| 3600 | 833 | 53 | 1.64 | 893 | 57 | 2.10 | 941 | 59 | 1.92 | 989 | 61 | 2.57 | 1022 | 62 | 1.97 |
| 3800 | 868 | 57 | 1.92 | 927 | 60 | 2.47 | 975 | 62 | 2.21 | 1019 | 64 | 2.96 | 1048 | 65 | 2.18 |
| CFM | 1.2 | | | 1.4 | | | 1.6 | | | 1.8 | | | 2.0 | | |
| | RPM | DDC % | BHP | RPM | DDC % | BHP | RPM | DDC % | BHP | RPM | DDC % | BHP | RPM | DDC % | BHP |
| 1800 | 890 | 34 | 1.06 | 899 | 36 | 1.12 | 1023 | 39 | 1.42 | 1077 | 41 | 1.64 | 1129 | 44 | 1.90 |
| 2000 | 908 | 37 | 1.17 | 922 | 39 | 1.22 | 1036 | 42 | 1.54 | 1088 | 44 | 1.78 | 1140 | 47 | 2.06 |
| 2200 | 926 | 40 | 1.30 | 945 | 42 | 1.32 | 1048 | 46 | 1.66 | 1099 | 48 | 1.93 | 1151 | 50 | 2.23 |
| 2400 | 945 | 44 | 1.43 | 968 | 46 | 1.43 | 1060 | 49 | 1.80 | 1110 | 51 | 2.09 | 1161 | 53 | 2.41 |
| 2600 | 963 | 47 | 1.58 | 991 | 49 | 1.55 | 1073 | 52 | 1.95 | 1122 | 54 | 2.26 | 1172 | 57 | 2.61 |
| 2800 | 981 | 50 | 1.75 | 1015 | 53 | 1.68 | 1085 | 55 | 2.12 | 1133 | 58 | 2.45 | 1183 | 60 | 2.83 |
| 3000 | 1000 | 54 | 1.94 | 1038 | 56 | 1.82 | 1097 | 58 | 2.29 | 1144 | 61 | 2.65 | 1194 | 63 | 3.07 |
| 3200 | 1018 | 57 | 2.14 | 1061 | 59 | 1.97 | 1110 | 62 | 2.48 | 1155 | 64 | 2.87 | 1204 | 67 | 3.32 |
| 3400 | 1036 | 61 | 2.36 | 1084 | 63 | 2.13 | 1122 | 65 | 2.69 | 1166 | 67 | 3.11 | 1215 | 70 | 3.60 |
| 3600 | 1055 | 64 | 2.61 | 1107 | 66 | 2.31 | 1134 | 68 | 2.91 | 1178 | 71 | 3.37 | 1226 | 73 | 3.90 |
| 3800 | 1073 | 67 | 2.89 | 1130 | 70 | 2.50 | 1147 | 71 | 3.16 | 1189 | 74 | 3.65 | | | |

Shaded area indicates air flow below 2250 SCFM (300 SCFM/ton) that is not recommended for High Stage cooling or heating.
Valid motor operating range for DDC% setting is 20 - 90.

**HORIZONTAL FLOW**

| CFM | 0.2 | | | 0.4 | | | 0.6 | | | 0.8 | | | 1.0 | | |
|---|---|---|---|---|---|---|---|---|---|---|---|---|---|---|---|
| | RPM | DDC % | BHP | RPM | DDC % | BHP | RPM | DDC % | BHP | RPM | DDC % | BHP | RPM | DDC % | BHP |
| 1800 | 456 | 21 | 0.31 | 541 | 22 | 0.38 | 610 | 23 | 0.50 | 684 | 25 | 0.57 | 745 | 28 | 0.70 |
| 2000 | 486 | 24 | 0.37 | 568 | 25 | 0.44 | 636 | 27 | 0.58 | 706 | 29 | 0.64 | 766 | 31 | 0.78 |
| 2200 | 516 | 27 | 0.43 | 595 | 29 | 0.50 | 661 | 30 | 0.66 | 729 | 32 | 0.72 | 787 | 35 | 0.86 |
| 2400 | 546 | 31 | 0.51 | 622 | 32 | 0.58 | 687 | 34 | 0.76 | 751 | 36 | 0.81 | 809 | 38 | 0.95 |
| 2600 | 576 | 34 | 0.59 | 649 | 36 | 0.67 | 712 | 38 | 0.88 | 774 | 39 | 0.91 | 830 | 42 | 1.05 |
| 2800 | 606 | 38 | 0.70 | 676 | 39 | 0.77 | 737 | 41 | 1.01 | 796 | 43 | 1.03 | 851 | 45 | 1.16 |
| 3000 | 636 | 41 | 0.82 | 703 | 43 | 0.88 | 763 | 45 | 1.16 | 818 | 47 | 1.16 | 872 | 49 | 1.28 |
| 3200 | 666 | 45 | 0.96 | 730 | 46 | 1.02 | 788 | 48 | 1.33 | 841 | 50 | 1.31 | 894 | 52 | 1.41 |
| 3400 | 696 | 48 | 1.13 | 757 | 50 | 1.17 | 814 | 52 | 1.53 | 863 | 54 | 1.48 | 915 | 55 | 1.56 |
| 3600 | 726 | 52 | 1.32 | 784 | 53 | 1.34 | 839 | 55 | 1.76 | 886 | 57 | 1.66 | 936 | 59 | 1.73 |
| 3800 | 756 | 55 | 1.55 | 811 | 57 | 1.55 | 865 | 59 | 2.03 | 908 | 61 | 1.88 | 957 | 62 | 1.91 |
| CFM | 1.2 | | | 1.4 | | | 1.6 | | | 1.8 | | | 2.0 | | |
| | RPM | DDC % | BHP | RPM | DDC % | BHP | RPM | DDC % | BHP | RPM | DDC % | BHP | RPM | DDC % | BHP |
| 1800 | 795 | 31 | 1.03 | 862 | 34 | 1.10 | 986 | 38 | 1.38 | 1040 | 41 | 1.33 | 1081 | 43 | 1.50 |
| 2000 | 816 | 34 | 1.14 | 880 | 37 | 1.19 | 992 | 41 | 1.50 | 1046 | 44 | 1.41 | 1088 | 46 | 1.59 |
| 2200 | 836 | 38 | 1.26 | 898 | 40 | 1.29 | 999 | 44 | 1.62 | 1053 | 47 | 1.50 | 1094 | 49 | 1.69 |
| 2400 | 857 | 41 | 1.39 | 917 | 43 | 1.39 | 1005 | 47 | 1.76 | 1059 | 49 | 1.59 | 1100 | 52 | 1.80 |
| 2600 | 878 | 44 | 1.54 | 935 | 46 | 1.51 | 1011 | 50 | 1.90 | 1066 | 52 | 1.69 | 1106 | 54 | 1.91 |
| 2800 | 899 | 48 | 1.70 | 954 | 50 | 1.64 | 1018 | 53 | 2.06 | 1072 | 55 | 1.80 | 1112 | 57 | 2.02 |
| 3000 | 919 | 51 | 1.88 | 972 | 53 | 1.77 | 1024 | 55 | 2.23 | 1079 | 58 | 1.91 | 1119 | 60 | 2.15 |
| 3200 | 940 | 54 | 2.08 | 990 | 56 | 1.92 | 1030 | 58 | 2.42 | 1085 | 60 | 2.02 | 1125 | 62 | 2.28 |
| 3400 | 961 | 57 | 2.30 | 1009 | 59 | 2.08 | 1037 | 61 | 2.62 | 1091 | 63 | 2.15 | 1131 | 65 | 2.42 |
| 3600 | 981 | 61 | 2.54 | 1027 | 62 | 2.25 | 1043 | 64 | 2.84 | 1098 | 66 | 2.28 | 1137 | 68 | 2.57 |
| 3800 | 1002 | 64 | 2.81 | 1046 | 66 | 2.44 | 1049 | 67 | 3.07 | 1104 | 69 | 2.42 | 1143 | 70 | 2.73 |

Shaded area indicates air flow below 2250 SCFM (300 SCFM/ton) that is not recommended for High Stage cooling or heating.
Valid motor operating range for DDC% setting is 20 - 90.

### 8.5 Ton HG1023D,DHG1024D & DHG1027D with DDC Controls • Standard Static to 2.4 HP (0.2 ~ 0.8 ESP) • Down Flow

| CFM | 0.2 | | | 0.4 | | | 0.6 | | | 0.8 | | | 1.0 | | |
|---|---|---|---|---|---|---|---|---|---|---|---|---|---|---|---|
| | RPM | DDC % | BHP | RPM | DDC % | BHP | RPM | DDC % | BHP | RPM | DDC % | BHP | RPM | DDC % | BHP |
| 1600 | | | | | | | | | | 678 | 21 | 0.55 | - | - | - |
| 1800 | | | | 557 | 21 | 0.42 | 635 | 23 | 0.57 | 702 | 25 | 0.62 | - | - | - |
| 2000 | 509 | 23 | 0.41 | 586 | 25 | 0.48 | 661 | 27 | 0.66 | 727 | 29 | 0.70 | - | - | - |
| 2200 | 541 | 26 | 0.48 | 615 | 28 | 0.55 | 688 | 30 | 0.76 | 752 | 32 | 0.79 | - | - | - |
| 2400 | 572 | 30 | 0.56 | 645 | 32 | 0.64 | 714 | 34 | 0.87 | 776 | 36 | 0.89 | - | - | - |
| 2600 | 604 | 34 | 0.66 | 674 | 36 | 0.73 | 740 | 38 | 1.00 | 801 | 40 | 1.01 | - | - | - |
| 2800 | 635 | 37 | 0.77 | 703 | 39 | 0.84 | 767 | 42 | 1.15 | 826 | 44 | 1.14 | - | - | - |
| 3000 | 667 | 41 | 0.91 | 733 | 43 | 0.97 | 793 | 45 | 1.33 | 850 | 47 | 1.28 | - | - | - |
| 3200 | 698 | 44 | 1.06 | 762 | 47 | 1.11 | 820 | 49 | 1.52 | 875 | 51 | 1.44 | - | - | - |
| 3400 | 730 | 48 | 1.25 | 791 | 50 | 1.28 | 846 | 53 | 1.75 | 900 | 55 | 1.63 | - | - | - |
| 3600 | 761 | 52 | 1.47 | 820 | 54 | 1.48 | 872 | 57 | 2.02 | 924 | 59 | 1.83 | - | - | - |
| 3800 | 793 | 55 | 1.72 | 850 | 58 | 1.70 | 899 | 60 | 2.32 | 949 | 62 | 2.07 | - | - | - |

Shaded area indicates air flow below 2550 SCFM (300 SCFM/ton) that is not recommended for High Stage cooling or heating.
Valid motor operating range for DDC% setting is 20 - 90.

### HORIZONTAL FLOW

| CFM | 0.2 | | | 0.4 | | | 0.6 | | | 0.8 | | | 1.0 | | |
|---|---|---|---|---|---|---|---|---|---|---|---|---|---|---|---|
| | RPM | DDC % | BHP | RPM | DDC % | BHP | RPM | DDC % | BHP | RPM | DDC % | BHP | RPM | DDC % | BHP |
| 1600 | | | | | | | | | | 649 | 21 | 0.55 | - | - | - |
| 1800 | 436 | 20 | 0.33 | 521 | 21 | 0.41 | 597 | 23 | 0.46 | 670 | 25 | 0.62 | - | - | - |
| 2000 | 463 | 23 | 0.39 | 546 | 25 | 0.47 | 620 | 27 | 0.52 | 691 | 29 | 0.69 | - | - | - |
| 2200 | 491 | 27 | 0.46 | 571 | 28 | 0.54 | 642 | 30 | 0.59 | 711 | 32 | 0.78 | - | - | - |
| 2400 | 519 | 30 | 0.54 | 596 | 32 | 0.62 | 665 | 34 | 0.67 | 732 | 36 | 0.88 | - | - | - |
| 2600 | 547 | 34 | 0.63 | 621 | 35 | 0.72 | 688 | 37 | 0.75 | 753 | 39 | 1.00 | - | - | - |
| 2800 | 575 | 37 | 0.74 | 646 | 39 | 0.82 | 710 | 41 | 0.85 | 773 | 43 | 1.12 | - | - | - |
| 3000 | 602 | 40 | 0.87 | 671 | 42 | 0.95 | 733 | 44 | 0.96 | 794 | 46 | 1.26 | - | - | - |
| 3200 | 630 | 44 | 1.02 | 696 | 46 | 1.09 | 756 | 48 | 1.08 | 815 | 50 | 1.43 | - | - | - |
| 3400 | 658 | 47 | 1.20 | 721 | 49 | 1.25 | 778 | 51 | 1.21 | 836 | 54 | 1.61 | - | - | - |
| 3600 | 686 | 51 | 1.41 | 746 | 53 | 1.44 | 801 | 55 | 1.37 | 856 | 57 | 1.81 | - | - | - |
| 3800 | 714 | 54 | 1.65 | 771 | 56 | 1.66 | 823 | 58 | 1.54 | 877 | 61 | 2.04 | - | - | - |

Shaded area indicates air flow below 2550 SCFM (300 SCFM/ton) that is not recommended for High Stage cooling or heating.
Valid motor operating range for DDC% setting is 20 - 90.

### 8.5 Ton Models: DHG1023L,DHG1024L & DHG1027L with DDC Controls • Medium Static to 3.5 HP (0.2 ~1.4 ESP) • Down Flow

| CFM | 0.2 | | | 0.4 | | | 0.6 | | | 0.8 | | | 1.0 | | |
|---|---|---|---|---|---|---|---|---|---|---|---|---|---|---|---|
| | RPM | DDC % | BHP | RPM | DDC % | BHP | RPM | DDC % | BHP | RPM | DDC % | BHP | RPM | DDC % | BHP |
| 1600 | | | | | | | | | | 678 | 21 | 0.55 | 757 | 23 | 0.73 |
| 1800 | | | | 557 | 21 | 0.42 | 635 | 23 | 0.57 | 702 | 25 | 0.62 | 778 | 27 | 0.82 |
| 2000 | 509 | 23 | 0.41 | 586 | 25 | 0.48 | 661 | 27 | 0.66 | 727 | 29 | 0.70 | 799 | 31 | 0.93 |
| 2200 | 541 | 26 | 0.48 | 615 | 28 | 0.55 | 688 | 30 | 0.76 | 752 | 32 | 0.79 | 820 | 35 | 1.04 |
| 2400 | 572 | 30 | 0.56 | 645 | 32 | 0.64 | 714 | 34 | 0.87 | 776 | 36 | 0.89 | 841 | 38 | 1.18 |
| 2600 | 604 | 34 | 0.66 | 674 | 36 | 0.73 | 740 | 38 | 1.00 | 801 | 40 | 1.01 | 862 | 42 | 1.33 |
| 2800 | 635 | 37 | 0.77 | 703 | 39 | 0.84 | 767 | 42 | 1.15 | 826 | 44 | 1.14 | 883 | 46 | 1.50 |
| 3000 | 667 | 41 | 0.91 | 733 | 43 | 0.97 | 793 | 45 | 1.33 | 850 | 47 | 1.28 | 904 | 50 | 1.69 |
| 3200 | 698 | 44 | 1.06 | 762 | 47 | 1.11 | 820 | 49 | 1.52 | 875 | 51 | 1.44 | 925 | 54 | 1.90 |
| 3400 | 730 | 48 | 1.25 | 791 | 50 | 1.28 | 846 | 53 | 1.75 | 900 | 55 | 1.63 | 946 | 57 | 2.15 |
| 3600 | 761 | 52 | 1.47 | 820 | 54 | 1.48 | 872 | 57 | 2.02 | 924 | 59 | 1.83 | 967 | 61 | 2.42 |
| 3800 | 793 | 55 | 1.72 | 850 | 58 | 1.70 | 899 | 60 | 2.32 | 949 | 62 | 2.07 | 988 | 65 | 2.73 |

**DOWNFLOW**

| CFM | 1.2 | | | 1.4 | | | 1.6 | | | 1.8 | | | 2.0 | | |
|---|---|---|---|---|---|---|---|---|---|---|---|---|---|---|---|
| | RPM | DDC % | BHP | RPM | DDC % | BHP | RPM | DDC % | BHP | RPM | DDC % | BHP | RPM | DDC % | BHP |
| 1600 | 834 | 25 | 0.79 | 799 | 28 | 1.04 | - | - | - | - | - | - | - | - | - |
| 1800 | 853 | 29 | 0.88 | 822 | 32 | 1.14 | - | - | - | - | - | - | - | - | - |
| 2000 | 873 | 33 | 0.97 | 845 | 35 | 1.27 | - | - | - | - | - | - | - | - | - |
| 2200 | 892 | 37 | 1.07 | 868 | 39 | 1.40 | - | - | - | - | - | - | - | - | - |
| 2400 | 912 | 41 | 1.18 | 891 | 42 | 1.55 | - | - | - | - | - | - | - | - | - |
| 2600 | 932 | 45 | 1.31 | 914 | 46 | 1.71 | - | - | - | - | - | - | - | - | - |
| 2800 | 951 | 49 | 1.45 | 937 | 50 | 1.89 | - | - | - | - | - | - | - | - | - |
| 3000 | 971 | 52 | 1.60 | 960 | 53 | 2.09 | - | - | - | - | - | - | - | - | - |
| 3200 | 991 | 56 | 1.77 | 983 | 57 | 2.31 | - | - | - | - | - | - | - | - | - |
| 3400 | 1010 | 60 | 1.95 | 1006 | 61 | 2.55 | - | - | - | - | - | - | - | - | - |
| 3600 | 1030 | 64 | 2.16 | 1029 | 64 | 2.82 | - | - | - | - | - | - | - | - | - |
| 3800 | 1049 | 68 | 2.39 | 1052 | 68 | 3.11 | - | - | - | - | - | - | - | - | - |

Shaded area indicates air flow below 2550 SCFM (300 SCFM/ton) that is not recommended for High Stage cooling or heating.
Valid motor operating range for DDC% setting is 20 - 90.

**HORIZONTAL FLOW**

| CFM | 0.2 | | | 0.4 | | | 0.6 | | | 0.8 | | | 1.0 | | |
|---|---|---|---|---|---|---|---|---|---|---|---|---|---|---|---|
| | RPM | DDC % | BHP | RPM | DDC % | BHP | RPM | DDC % | BHP | RPM | DDC % | BHP | RPM | DDC % | BHP |
| 1600 | | | | | | | | | | 649 | 21 | 0.55 | 722 | 23 | 0.59 |
| 1800 | 436 | 20 | 0.33 | 521 | 21 | 0.41 | 597 | 23 | 0.46 | 670 | 25 | 0.62 | 740 | 27 | 0.65 |
| 2000 | 463 | 23 | 0.39 | 546 | 25 | 0.47 | 620 | 27 | 0.52 | 691 | 29 | 0.69 | 758 | 30 | 0.72 |
| 2200 | 491 | 27 | 0.46 | 571 | 28 | 0.54 | 642 | 30 | 0.59 | 711 | 32 | 0.78 | 777 | 34 | 0.80 |
| 2400 | 519 | 30 | 0.54 | 596 | 32 | 0.62 | 665 | 34 | 0.67 | 732 | 36 | 0.88 | 795 | 37 | 0.88 |
| 2600 | 547 | 34 | 0.63 | 621 | 35 | 0.72 | 688 | 37 | 0.75 | 753 | 39 | 1.00 | 814 | 41 | 0.97 |
| 2800 | 575 | 37 | 0.74 | 646 | 39 | 0.82 | 710 | 41 | 0.85 | 773 | 43 | 1.12 | 832 | 45 | 1.08 |
| 3000 | 602 | 40 | 0.87 | 671 | 42 | 0.95 | 733 | 44 | 0.96 | 794 | 46 | 1.26 | 851 | 48 | 1.19 |
| 3200 | 630 | 44 | 1.02 | 696 | 46 | 1.09 | 756 | 48 | 1.08 | 815 | 50 | 1.43 | 869 | 52 | 1.31 |
| 3400 | 658 | 47 | 1.20 | 721 | 49 | 1.25 | 778 | 51 | 1.21 | 836 | 54 | 1.61 | 888 | 56 | 1.45 |
| 3600 | 686 | 51 | 1.41 | 746 | 53 | 1.44 | 801 | 55 | 1.37 | 856 | 57 | 1.81 | 906 | 59 | 1.60 |
| 3800 | 714 | 54 | 1.65 | 771 | 56 | 1.66 | 823 | 58 | 1.54 | 877 | 61 | 2.04 | 925 | 63 | 1.77 |
| CFM | 1.2 | | | 1.4 | | | 1.6 | | | 1.8 | | | 2.0 | | |
| | RPM | DDC % | BHP | RPM | DDC % | BHP | RPM | DDC % | BHP | RPM | DDC % | BHP | RPM | DDC % | BHP |
| 1600 | 787 | 25 | 0.76 | 830 | 28 | 0.92 | - | - | - | - | - | - | - | - | - |
| 1800 | 804 | 28 | 0.84 | 847 | 32 | 1.00 | - | - | - | - | - | - | - | - | - |
| 2000 | 820 | 32 | 0.93 | 864 | 35 | 1.08 | - | - | - | - | - | - | - | - | - |
| 2200 | 837 | 36 | 1.02 | 881 | 39 | 1.17 | - | - | - | - | - | - | - | - | - |
| 2400 | 854 | 40 | 1.13 | 898 | 42 | 1.27 | - | - | - | - | - | - | - | - | - |
| 2600 | 870 | 43 | 1.25 | 915 | 46 | 1.37 | - | - | - | - | - | - | - | - | - |
| 2800 | 887 | 47 | 1.38 | 932 | 49 | 1.49 | - | - | - | - | - | - | - | - | - |
| 3000 | 904 | 51 | 1.53 | 949 | 53 | 1.61 | - | - | - | - | - | - | - | - | - |
| 3200 | 920 | 54 | 1.69 | 966 | 56 | 1.74 | - | - | - | - | - | - | - | - | - |
| 3400 | 937 | 58 | 1.87 | 983 | 60 | 1.89 | - | - | - | - | - | - | - | - | - |
| 3600 | 954 | 62 | 2.06 | 1000 | 63 | 2.05 | - | - | - | - | - | - | - | - | - |
| 3800 | 971 | 65 | 2.28 | 1017 | 67 | 2.22 | - | - | - | - | - | - | - | - | - |

Shaded area indicates air flow below 2550 SCFM (300 SCFM/ton) that is not recommended for High Stage cooling or heating.
Valid motor operating range for DDC% setting is 20 - 90.

**8.5 Ton Models: DHG1023W,DHG1024W & DHG1027W with DDC Controls • High Static to 3.5 HP (0.2 ~ 2.0 ESP) • Down Flow**

| CFM | 0.2 | | | 0.4 | | | 0.6 | | | 0.8 | | | 1.0 | | |
|---|---|---|---|---|---|---|---|---|---|---|---|---|---|---|---|
| | RPM | DDC % | BHP | RPM | DDC % | BHP | RPM | DDC % | BHP | RPM | DDC % | BHP | RPM | DDC % | BHP |
| 1600 | | | | | | | | | | 678 | 21 | 0.55 | 757 | 23 | 0.73 |
| 1800 | | | | 557 | 21 | 0.42 | 635 | 23 | 0.57 | 702 | 25 | 0.62 | 778 | 27 | 0.82 |
| 2000 | 509 | 23 | 0.41 | 586 | 25 | 0.48 | 661 | 27 | 0.66 | 727 | 29 | 0.70 | 799 | 31 | 0.93 |
| 2200 | 541 | 26 | 0.48 | 615 | 28 | 0.55 | 688 | 30 | 0.76 | 752 | 32 | 0.79 | 820 | 35 | 1.04 |
| 2400 | 572 | 30 | 0.56 | 645 | 32 | 0.64 | 714 | 34 | 0.87 | 776 | 36 | 0.89 | 841 | 38 | 1.18 |
| 2600 | 604 | 34 | 0.66 | 674 | 36 | 0.73 | 740 | 38 | 1.00 | 801 | 40 | 1.01 | 862 | 42 | 1.33 |
| 2800 | 635 | 37 | 0.77 | 703 | 39 | 0.84 | 767 | 42 | 1.15 | 826 | 44 | 1.14 | 883 | 46 | 1.50 |
| 3000 | 667 | 41 | 0.91 | 733 | 43 | 0.97 | 793 | 45 | 1.33 | 850 | 47 | 1.28 | 904 | 50 | 1.69 |
| 3200 | 698 | 44 | 1.06 | 762 | 47 | 1.11 | 820 | 49 | 1.52 | 875 | 51 | 1.44 | 925 | 54 | 1.90 |
| 3400 | 730 | 48 | 1.25 | 791 | 50 | 1.28 | 846 | 53 | 1.75 | 900 | 55 | 1.63 | 946 | 57 | 2.15 |
| 3600 | 761 | 52 | 1.47 | 820 | 54 | 1.48 | 872 | 57 | 2.02 | 924 | 59 | 1.83 | 967 | 61 | 2.42 |
| 3800 | 793 | 55 | 1.72 | 850 | 58 | 1.70 | 899 | 60 | 2.32 | 949 | 62 | 2.07 | 988 | 65 | 2.73 |
| 4000 | 824 | 59 | 2.02 | 879 | 61 | 1.95 | 925 | 64 | 2.67 | 974 | 66 | 2.33 | 1009 | 69 | 3.08 |
| 4200 | 856 | 62 | 2.37 | 908 | 65 | 2.25 | 951 | 68 | 3.07 | 998 | 70 | 2.63 | 1030 | 73 | 3.47 |
| CFM | 1.2 | | | 1.4 | | | 1.6 | | | 1.8 | | | 2.0 | | |
| | RPM | DDC % | BHP | RPM | DDC % | BHP | RPM | DDC % | BHP | RPM | DDC % | BHP | RPM | DDC % | BHP |
| 1600 | 834 | 25 | 0.79 | 799 | 28 | 1.04 | 872 | 30 | 1.08 | 945 | 33 | 1.29 | 1006 | 32 | 1.39 |
| 1800 | 853 | 29 | 0.88 | 822 | 32 | 1.14 | 894 | 34 | 1.17 | 965 | 37 | 1.40 | 1025 | 36 | 1.51 |
| 2000 | 873 | 33 | 0.97 | 845 | 35 | 1.27 | 916 | 38 | 1.26 | 986 | 40 | 1.52 | 1045 | 40 | 1.63 |
| 2200 | 892 | 37 | 1.07 | 868 | 39 | 1.40 | 938 | 41 | 1.37 | 1007 | 44 | 1.64 | 1064 | 44 | 1.77 |
| 2400 | 912 | 41 | 1.18 | 891 | 42 | 1.55 | 960 | 45 | 1.48 | 1028 | 47 | 1.78 | 1084 | 48 | 1.92 |
| 2600 | 932 | 45 | 1.31 | 914 | 46 | 1.71 | 982 | 49 | 1.61 | 1049 | 51 | 1.93 | 1103 | 52 | 2.08 |
| 2800 | 951 | 49 | 1.45 | 937 | 50 | 1.89 | 1004 | 52 | 1.74 | 1070 | 55 | 2.09 | 1122 | 57 | 2.25 |
| 3000 | 971 | 52 | 1.60 | 960 | 53 | 2.09 | 1026 | 56 | 1.88 | 1091 | 58 | 2.27 | 1142 | 61 | 2.44 |
| 3200 | 991 | 56 | 1.77 | 983 | 57 | 2.31 | 1048 | 60 | 2.04 | 1112 | 62 | 2.45 | 1161 | 65 | 2.64 |
| 3400 | 1010 | 60 | 1.95 | 1006 | 61 | 2.55 | 1070 | 63 | 2.21 | 1133 | 66 | 2.66 | 1180 | 69 | 2.86 |
| 3600 | 1030 | 64 | 2.16 | 1029 | 64 | 2.82 | 1092 | 67 | 2.39 | 1154 | 69 | 2.88 | 1200 | 73 | 3.10 |
| 3800 | 1049 | 68 | 2.39 | 1052 | 68 | 3.11 | 1114 | 70 | 2.59 | 1175 | 73 | 3.12 | | | |
| 4000 | 1069 | 72 | 2.64 | 1075 | 71 | 3.44 | 1136 | 74 | 2.81 | | | | | | |
| 4200 | 1089 | 74 | 2.91 | 1098 | 74 | 3.80 | | | | | | | | | |

Shaded area indicates air flow below 2550 SCFM (300 SCFM/ton) that is not recommended for High Stage cooling or heating.
Valid motor operating range for DDC% setting is 20 - 90.

**HORIZONTAL FLOW**

| CFM | 0.2 | | | 0.4 | | | 0.6 | | | 0.8 | | | 1.0 | | |
|---|---|---|---|---|---|---|---|---|---|---|---|---|---|---|---|
| | RPM | DDC % | BHP | RPM | DDC % | BHP | RPM | DDC % | BHP | RPM | DDC % | BHP | RPM | DDC % | BHP |
| 1600 | | | | | | | | | | 649 | 21 | 0.55 | 722 | 23 | 0.59 |
| 1800 | 436 | 20 | 0.33 | 521 | 21 | 0.41 | 597 | 23 | 0.46 | 670 | 25 | 0.62 | 740 | 27 | 0.65 |
| 2000 | 463 | 23 | 0.39 | 546 | 25 | 0.47 | 620 | 27 | 0.52 | 691 | 29 | 0.69 | 758 | 30 | 0.72 |
| 2200 | 491 | 27 | 0.46 | 571 | 28 | 0.54 | 642 | 30 | 0.59 | 711 | 32 | 0.78 | 777 | 34 | 0.80 |
| 2400 | 519 | 30 | 0.54 | 596 | 32 | 0.62 | 665 | 34 | 0.67 | 732 | 36 | 0.88 | 795 | 37 | 0.88 |
| 2600 | 547 | 34 | 0.63 | 621 | 35 | 0.72 | 688 | 37 | 0.75 | 753 | 39 | 1.00 | 814 | 41 | 0.97 |
| 2800 | 575 | 37 | 0.74 | 646 | 39 | 0.82 | 710 | 41 | 0.85 | 773 | 43 | 1.12 | 832 | 45 | 1.08 |
| 3000 | 602 | 40 | 0.87 | 671 | 42 | 0.95 | 733 | 44 | 0.96 | 794 | 46 | 1.26 | 851 | 48 | 1.19 |
| 3200 | 630 | 44 | 1.02 | 696 | 46 | 1.09 | 756 | 48 | 1.08 | 815 | 50 | 1.43 | 869 | 52 | 1.31 |
| 3400 | 658 | 47 | 1.20 | 721 | 49 | 1.25 | 778 | 51 | 1.21 | 836 | 54 | 1.61 | 888 | 56 | 1.45 |
| 3600 | 686 | 51 | 1.41 | 746 | 53 | 1.44 | 801 | 55 | 1.37 | 856 | 57 | 1.81 | 906 | 59 | 1.60 |
| 3800 | 714 | 54 | 1.65 | 771 | 56 | 1.66 | 823 | 58 | 1.54 | 877 | 61 | 2.04 | 925 | 63 | 1.77 |
| 4000 | 741 | 58 | 1.94 | 797 | 60 | 1.91 | 846 | 62 | 1.74 | 898 | 64 | 2.30 | 943 | 67 | 1.96 |
| 4200 | 769 | 61 | 2.27 | 822 | 63 | 2.19 | 869 | 65 | 1.96 | 918 | 68 | 2.60 | 962 | 70 | 2.17 |

| CFM | 1.2 | | | 1.4 | | | 1.6 | | | 1.8 | | | 2.0 | | |
|---|---|---|---|---|---|---|---|---|---|---|---|---|---|---|---|
| | RPM | DDC % | BHP | RPM | DDC % | BHP | RPM | DDC % | BHP | RPM | DDC % | BHP | RPM | DDC % | BHP |
| 1600 | 787 | 25 | 0.76 | 830 | 28 | 0.92 | 908 | 31 | 1.24 | 950 | 33 | 1.27 | 978 | 36 | 1.59 |
| 1800 | 804 | 28 | 0.84 | 847 | 32 | 1.00 | 922 | 35 | 1.35 | 964 | 37 | 1.35 | 993 | 39 | 1.69 |
| 2000 | 820 | 32 | 0.93 | 864 | 35 | 1.08 | 936 | 38 | 1.46 | 978 | 40 | 1.43 | 1009 | 42 | 1.79 |
| 2200 | 837 | 36 | 1.02 | 881 | 39 | 1.17 | 950 | 42 | 1.58 | 992 | 44 | 1.52 | 1024 | 46 | 1.90 |
| 2400 | 854 | 40 | 1.13 | 898 | 42 | 1.27 | 964 | 45 | 1.71 | 1006 | 47 | 1.62 | 1039 | 49 | 2.02 |
| 2600 | 870 | 43 | 1.25 | 915 | 46 | 1.37 | 977 | 48 | 1.85 | 1020 | 51 | 1.72 | 1054 | 53 | 2.15 |
| 2800 | 887 | 47 | 1.38 | 932 | 49 | 1.49 | 991 | 52 | 2.01 | 1033 | 54 | 1.82 | 1069 | 56 | 2.28 |
| 3000 | 904 | 51 | 1.53 | 949 | 53 | 1.61 | 1005 | 55 | 2.17 | 1047 | 58 | 1.93 | 1084 | 60 | 2.42 |
| 3200 | 920 | 54 | 1.69 | 966 | 56 | 1.74 | 1019 | 59 | 2.36 | 1061 | 61 | 2.05 | 1099 | 63 | 2.57 |
| 3400 | 937 | 58 | 1.87 | 983 | 60 | 1.89 | 1033 | 62 | 2.55 | 1075 | 65 | 2.18 | 1115 | 67 | 2.73 |
| 3600 | 954 | 62 | 2.06 | 1000 | 63 | 2.05 | 1047 | 66 | 2.76 | 1089 | 68 | 2.32 | 1130 | 70 | 2.90 |
| 3800 | 971 | 65 | 2.28 | 1017 | 67 | 2.22 | 1060 | 69 | 2.99 | 1103 | 71 | 2.46 | 1145 | 74 | 3.08 |
| 4000 | 987 | 69 | 2.52 | 1034 | 70 | 2.40 | 1074 | 73 | 3.24 | 1116 | 74 | 2.61 | | | |
| 4200 | 1004 | 73 | 2.78 | 1051 | 74 | 2.60 | | | | | | | | | |

Shaded area indicates air flow below 2550 SCFM (300 SCFM/ton) that is not recommended for High Stage cooling or heating.
Valid motor operating range for DDC% setting is 20 - 90.

### 10 Ton Models: DHG1203D, DHG1204D & DHG1207D with DDC Controls • Standard Static to 2.4 HP (0.2 ~ 0.8 ESP) • Down Flow

| CFM | 0.2 | | | 0.4 | | | 0.6 | | | 0.8 | | | 1.0 | | |
|---|---|---|---|---|---|---|---|---|---|---|---|---|---|---|---|
| | RPM | DDC % | BHP | RPM | DDC % | BHP | RPM | DDC % | BHP | RPM | DDC % | BHP | RPM | DDC % | BHP |
| 2000 | | | | 582 | 20 | 0.55 | 644 | 20 | 0.65 | 712 | 21 | 0.81 | - | - | - |
| 2200 | 533 | 21 | 0.43 | 610 | 24 | 0.62 | 671 | 25 | 0.73 | 737 | 26 | 0.91 | - | - | - |
| 2400 | 563 | 25 | 0.49 | 638 | 28 | 0.70 | 699 | 29 | 0.82 | 763 | 30 | 1.03 | - | - | - |
| 2600 | 593 | 29 | 0.55 | 666 | 32 | 0.79 | 726 | 33 | 0.93 | 789 | 35 | 1.16 | - | - | - |
| 2800 | 622 | 32 | 0.62 | 694 | 36 | 0.89 | 754 | 37 | 1.05 | 814 | 39 | 1.31 | - | - | - |
| 3000 | 652 | 36 | 0.70 | 723 | 40 | 1.00 | 781 | 42 | 1.18 | 840 | 44 | 1.47 | - | - | - |
| 3200 | 681 | 40 | 0.79 | 751 | 44 | 1.13 | 809 | 46 | 1.33 | 866 | 48 | 1.66 | - | - | - |
| 3400 | 711 | 44 | 0.89 | 779 | 48 | 1.27 | 836 | 50 | 1.50 | 891 | 52 | 1.87 | - | - | - |
| 3600 | 740 | 48 | 1.00 | 807 | 52 | 1.43 | 864 | 54 | 1.69 | 917 | 57 | 2.11 | - | - | - |
| 3800 | 770 | 52 | 1.13 | 835 | 56 | 1.61 | 891 | 59 | 1.90 | 943 | 61 | 2.38 | - | - | - |
| 4000 | 800 | 56 | 1.27 | 863 | 60 | 1.82 | 919 | 63 | 2.15 | | | | - | - | - |
| 4200 | 829 | 60 | 1.44 | 892 | 63 | 2.05 | | | | | | | - | - | - |

Shaded area indicates air flow below 3000 SCFM (300 SCFM/ton) that is not recommended for High Stage cooling or heating.
Valid motor operating range for DDC% setting is 20 - 90.

### HORIZONTAL FLOW

| CFM | 0.2 | | | 0.4 | | | 0.6 | | | 0.8 | | | 1.0 | | |
|---|---|---|---|---|---|---|---|---|---|---|---|---|---|---|---|
| | RPM | DDC % | BHP | RPM | DDC % | BHP | RPM | DDC % | BHP | RPM | DDC % | BHP | RPM | DDC % | BHP |
| 2000 | | | | | | | 607 | 20 | 0.60 | 685 | 22 | 0.64 | - | - | - |
| 2200 | 473 | 19 | 0.42 | 552 | 21 | 0.48 | 628 | 24 | 0.68 | 704 | 26 | 0.71 | - | - | - |
| 2400 | 499 | 23 | 0.49 | 576 | 25 | 0.54 | 650 | 28 | 0.77 | 723 | 30 | 0.78 | - | - | - |
| 2600 | 525 | 27 | 0.56 | 600 | 29 | 0.61 | 671 | 32 | 0.86 | 742 | 34 | 0.87 | - | - | - |
| 2800 | 551 | 31 | 0.65 | 623 | 33 | 0.69 | 693 | 35 | 0.97 | 762 | 38 | 0.96 | - | - | - |
| 3000 | 578 | 35 | 0.74 | 647 | 37 | 0.77 | 714 | 39 | 1.10 | 781 | 42 | 1.06 | - | - | - |
| 3200 | 604 | 39 | 0.85 | 671 | 41 | 0.87 | 736 | 43 | 1.24 | 800 | 46 | 1.17 | - | - | - |
| 3400 | 630 | 43 | 0.98 | 695 | 45 | 0.98 | 757 | 47 | 1.40 | 819 | 50 | 1.29 | - | - | - |
| 3600 | 656 | 47 | 1.13 | 719 | 49 | 1.11 | 779 | 51 | 1.57 | 839 | 54 | 1.43 | - | - | - |
| 3800 | 682 | 51 | 1.30 | 743 | 53 | 1.25 | 800 | 55 | 1.78 | 858 | 58 | 1.58 | - | - | - |
| 4000 | 708 | 55 | 1.49 | 767 | 57 | 1.41 | 822 | 59 | 2.00 | 877 | 62 | 1.75 | - | - | - |
| 4200 | 734 | 59 | 1.72 | 791 | 61 | 1.59 | 843 | 63 | 2.26 | | | | - | - | - |

Shaded area indicates air flow below 3000 SCFM (300 SCFM/ton) that is not recommended for High Stage cooling or heating.
Valid motor operating range for DDC% setting is 20 - 90.

### 10 Ton Models: DDHG1203L, DHG1204L & DHG1207L with DDC Controls • Medium Static to 3.5 HP (0.2 ~ 1.4 ESP) • Down Flow

| CFM | 0.2 | | | 0.4 | | | 0.6 | | | 0.8 | | | 1.0 | | |
|---|---|---|---|---|---|---|---|---|---|---|---|---|---|---|---|
| | RPM | DDC % | BHP | RPM | DDC % | BHP | RPM | DDC % | BHP | RPM | DDC % | BHP | RPM | DDC % | BHP |
| 1800 | | | | | | | | | | | | | 765 | 21 | 0.87 |
| 2000 | 504 | 17 | 0.38 | 582 | 20 | 0.55 | 644 | 20 | 0.65 | 712 | 21 | 0.81 | 788 | 25 | 0.97 |
| 2200 | 533 | 21 | 0.43 | 610 | 24 | 0.62 | 671 | 25 | 0.73 | 737 | 26 | 0.91 | 810 | 30 | 1.07 |
| 2400 | 563 | 25 | 0.49 | 638 | 28 | 0.70 | 699 | 29 | 0.82 | 763 | 30 | 1.03 | 833 | 34 | 1.18 |
| 2600 | 593 | 29 | 0.55 | 666 | 32 | 0.79 | 726 | 33 | 0.93 | 789 | 35 | 1.16 | 856 | 38 | 1.30 |
| 2800 | 622 | 32 | 0.62 | 694 | 36 | 0.89 | 754 | 37 | 1.05 | 814 | 39 | 1.31 | 878 | 42 | 1.44 |
| 3000 | 652 | 36 | 0.70 | 723 | 40 | 1.00 | 781 | 42 | 1.18 | 840 | 44 | 1.47 | 901 | 47 | 1.59 |
| 3200 | 681 | 40 | 0.79 | 751 | 44 | 1.13 | 809 | 46 | 1.33 | 866 | 48 | 1.66 | 923 | 51 | 1.76 |
| 3400 | 711 | 44 | 0.89 | 779 | 48 | 1.27 | 836 | 50 | 1.50 | 891 | 52 | 1.87 | 946 | 55 | 1.95 |
| 3600 | 740 | 48 | 1.00 | 807 | 52 | 1.43 | 864 | 54 | 1.69 | 917 | 57 | 2.11 | 969 | 59 | 2.15 |
| 3800 | 770 | 52 | 1.13 | 835 | 56 | 1.61 | 891 | 59 | 1.90 | 943 | 61 | 2.38 | 991 | 64 | 2.38 |
| 4000 | 800 | 56 | 1.27 | 863 | 60 | 1.82 | 919 | 63 | 2.15 | 968 | 66 | 2.68 | 1014 | 68 | 2.63 |
| 4200 | 829 | 60 | 1.44 | 892 | 64 | 2.05 | 946 | 67 | 2.42 | 994 | 70 | 3.02 | 1037 | 72 | 2.90 |
| 4400 | 859 | 64 | 1.62 | 920 | 68 | 2.31 | 974 | 72 | 2.73 | 1020 | 74 | 3.41 | 1059 | 74 | 3.21 |
| 4600 | 888 | 68 | 1.82 | 948 | 72 | 2.61 | 1001 | 74 | 3.08 | | | | | | |
| 4800 | 918 | 71 | 2.06 | 976 | 74 | 2.94 | | | | | | | | | |
| 5000 | 947 | 74 | 2.32 | | | | | | | | | | | | |

**DOWNFLOW**

| CFM | 1.2 | | | 1.4 | | | 1.6 | | | 1.8 | | | 2.0 | | |
|---|---|---|---|---|---|---|---|---|---|---|---|---|---|---|---|
| | RPM | DDC % | BHP | RPM | DDC % | BHP | RPM | DDC % | BHP | RPM | DDC % | BHP | RPM | DDC % | BHP |
| 1800 | 867 | 27 | 1.00 | 887 | 31 | 1.26 | - | - | - | - | - | - | - | - | - |
| 2000 | 885 | 31 | 1.09 | 906 | 35 | 1.37 | - | - | - | - | - | - | - | - | - |
| 2200 | 903 | 35 | 1.18 | 926 | 38 | 1.48 | - | - | - | - | - | - | - | - | - |
| 2400 | 921 | 39 | 1.28 | 945 | 42 | 1.61 | - | - | - | - | - | - | - | - | - |
| 2600 | 939 | 43 | 1.38 | 965 | 46 | 1.74 | - | - | - | - | - | - | - | - | - |
| 2800 | 956 | 47 | 1.50 | 985 | 50 | 1.89 | - | - | - | - | - | - | - | - | - |
| 3000 | 974 | 51 | 1.62 | 1004 | 54 | 2.04 | - | - | - | - | - | - | - | - | - |
| 3200 | 992 | 55 | 1.76 | 1024 | 58 | 2.21 | - | - | - | - | - | - | - | - | - |
| 3400 | 1010 | 59 | 1.90 | 1044 | 62 | 2.40 | - | - | - | - | - | - | - | - | - |
| 3600 | 1028 | 63 | 2.06 | 1063 | 66 | 2.60 | - | - | - | - | - | - | - | - | - |
| 3800 | 1046 | 67 | 2.23 | 1083 | 70 | 2.81 | - | - | - | - | - | - | - | - | - |
| 4000 | 1064 | 71 | 2.42 | 1103 | 73 | 3.05 | - | - | - | - | - | - | - | - | - |
| 4200 | 1082 | 74 | 2.62 | | | | - | - | - | - | - | - | - | - | - |
| 4400 | | | | | | | - | - | - | - | - | - | - | - | - |
| 4600 | | | | | | | - | - | - | - | - | - | - | - | - |
| 4800 | | | | | | | - | - | - | - | - | - | - | - | - |
| 5000 | | | | | | | - | - | - | - | - | - | - | - | - |

Shaded area indicates air flow below 3000 SCFM (300 SCFM/ton) that is not recommended for High Stage cooling or heating.
Valid motor operating range for DDC% setting is 20 - 90.

**HORIZONTAL FLOW**

| CFM | 0.2 | | | 0.4 | | | 0.6 | | | 0.8 | | | 1.0 | | |
|---|---|---|---|---|---|---|---|---|---|---|---|---|---|---|---|
| | RPM | DDC % | BHP | RPM | DDC % | BHP | RPM | DDC % | BHP | RPM | DDC % | BHP | RPM | DDC % | BHP |
| 1800 | | | | | | | | | | | | | 740 | 21 | 0.85 |
| 2000 | 447 | 15 | 0.37 | 528 | 17 | 0.42 | 607 | 20 | 0.60 | 685 | 22 | 0.64 | 758 | 25 | 0.94 |
| 2200 | 473 | 19 | 0.42 | 552 | 21 | 0.48 | 628 | 24 | 0.68 | 704 | 26 | 0.71 | 775 | 29 | 1.04 |
| 2400 | 499 | 23 | 0.49 | 576 | 25 | 0.54 | 650 | 28 | 0.77 | 723 | 30 | 0.78 | 792 | 33 | 1.15 |
| 2600 | 525 | 27 | 0.56 | 600 | 29 | 0.61 | 671 | 32 | 0.86 | 742 | 34 | 0.87 | 809 | 37 | 1.27 |
| 2800 | 551 | 31 | 0.65 | 623 | 33 | 0.69 | 693 | 35 | 0.97 | 762 | 38 | 0.96 | 827 | 41 | 1.41 |
| 3000 | 578 | 35 | 0.74 | 647 | 37 | 0.77 | 714 | 39 | 1.10 | 781 | 42 | 1.06 | 844 | 45 | 1.56 |
| 3200 | 604 | 39 | 0.85 | 671 | 41 | 0.87 | 736 | 43 | 1.24 | 800 | 46 | 1.17 | 861 | 49 | 1.72 |
| 3400 | 630 | 43 | 0.98 | 695 | 45 | 0.98 | 757 | 47 | 1.40 | 819 | 50 | 1.29 | 879 | 53 | 1.90 |
| 3600 | 656 | 47 | 1.13 | 719 | 49 | 1.11 | 779 | 51 | 1.57 | 839 | 54 | 1.43 | 896 | 56 | 2.10 |
| 3800 | 682 | 51 | 1.30 | 743 | 53 | 1.25 | 801 | 55 | 1.78 | 858 | 58 | 1.58 | 913 | 60 | 2.32 |
| 4000 | 708 | 55 | 1.49 | 767 | 57 | 1.41 | 822 | 59 | 2.00 | 877 | 62 | 1.75 | 931 | 64 | 2.56 |
| 4200 | 734 | 59 | 1.72 | 791 | 61 | 1.59 | 844 | 63 | 2.26 | 896 | 66 | 1.93 | 948 | 68 | 2.83 |
| 4400 | 760 | 63 | 1.98 | 814 | 65 | 1.79 | 865 | 67 | 2.54 | 916 | 70 | 2.13 | 965 | 72 | 3.13 |
| 4600 | 786 | 67 | 2.28 | 838 | 69 | 2.02 | 887 | 71 | 2.87 | 935 | 74 | 2.36 | 982 | 74 | 3.46 |
| 4800 | 812 | 71 | 2.62 | 862 | 73 | 2.28 | 908 | 74 | 3.24 | | | | | | |
| 5000 | 838 | 74 | 3.01 | | | | | | | | | | | | |

| CFM | 1.2 | | | 1.4 | | | 1.6 | | | 1.8 | | | 2.0 | | |
|---|---|---|---|---|---|---|---|---|---|---|---|---|---|---|---|
| | RPM | DDC % | BHP | RPM | DDC % | BHP | RPM | DDC % | BHP | RPM | DDC % | BHP | RPM | DDC % | BHP |
| 1800 | 810 | 24 | 0.95 | 848 | 28 | 1.29 | - | - | - | - | - | - | - | - | - |
| 2000 | 825 | 28 | 1.02 | 863 | 32 | 1.40 | - | - | - | - | - | - | - | - | - |
| 2200 | 841 | 32 | 1.11 | 879 | 36 | 1.51 | - | - | - | - | - | - | - | - | - |
| 2400 | 856 | 36 | 1.20 | 895 | 40 | 1.64 | - | - | - | - | - | - | - | - | - |
| 2600 | 871 | 39 | 1.30 | 910 | 43 | 1.77 | - | - | - | - | - | - | - | - | - |
| 2800 | 886 | 43 | 1.41 | 926 | 47 | 1.92 | - | - | - | - | - | - | - | - | - |
| 3000 | 902 | 47 | 1.53 | 942 | 51 | 2.08 | - | - | - | - | - | - | - | - | - |
| 3200 | 917 | 51 | 1.66 | 957 | 55 | 2.26 | - | - | - | - | - | - | - | - | - |
| 3400 | 932 | 55 | 1.79 | 973 | 58 | 2.44 | - | - | - | - | - | - | - | - | - |
| 3600 | 948 | 59 | 1.94 | 989 | 62 | 2.65 | - | - | - | - | - | - | - | - | - |
| 3800 | 963 | 63 | 2.11 | 1004 | 66 | 2.87 | - | - | - | - | - | - | - | - | - |
| 4000 | 978 | 67 | 2.28 | 1020 | 70 | 3.11 | - | - | - | - | - | - | - | - | - |
| 4200 | 994 | 71 | 2.47 | 1036 | 74 | 3.37 | - | - | - | - | - | - | - | - | - |
| 4400 | 1009 | 74 | 2.68 | | | | - | - | - | - | - | - | - | - | - |
| 4600 | | | | | | | - | - | - | - | - | - | - | - | - |
| 4800 | | | | | | | - | - | - | - | - | - | - | - | - |
| 5000 | | | | | | | - | - | - | - | - | - | - | - | - |

Shaded area indicates air flow below 3000 SCFM (300 SCFM/ton) that is not recommended for High Stage cooling or heating.
Valid motor operating range for DDC% setting is 20 - 90.

**10 Ton Models: DHG1203W, DHG1204W & DHG1207W with DDC Controls • High Static to 5.0 HP (0.2 ~ 2.0 ESP) • Down Flow**

| CFM | 0.2 | | | 0.4 | | | 0.6 | | | 0.8 | | | 1.0 | | |
|---|---|---|---|---|---|---|---|---|---|---|---|---|---|---|---|
| | RPM | DDC % | BHP | RPM | DDC % | BHP | RPM | DDC % | BHP | RPM | DDC % | BHP | RPM | DDC % | BHP |
| 1800 | | | | | | | | | | | | | | | |
| 2000 | 492 | 20 | 0.40 | 538 | 9 | 0.48 | 629 | 14 | 0.68 | 713 | 17 | 0.80 | 772 | 21 | 0.79 |
| 2200 | 522 | 23 | 0.46 | 569 | 13 | 0.54 | 657 | 19 | 0.76 | 738 | 22 | 0.91 | 796 | 25 | 0.87 |
| 2400 | 552 | 27 | 0.53 | 600 | 18 | 0.61 | 684 | 23 | 0.86 | 763 | 26 | 1.02 | 820 | 29 | 0.96 |
| 2600 | 583 | 30 | 0.61 | 631 | 22 | 0.69 | 712 | 27 | 0.97 | 787 | 30 | 1.15 | 844 | 34 | 1.06 |
| 2800 | 613 | 33 | 0.71 | 662 | 27 | 0.78 | 740 | 32 | 1.10 | 812 | 35 | 1.30 | 867 | 38 | 1.18 |
| 3000 | 643 | 37 | 0.81 | 693 | 32 | 0.87 | 768 | 36 | 1.23 | 837 | 39 | 1.47 | 891 | 42 | 1.30 |
| 3200 | 673 | 40 | 0.93 | 724 | 36 | 0.99 | 796 | 40 | 1.39 | 862 | 43 | 1.65 | 915 | 46 | 1.44 |
| 3400 | 704 | 44 | 1.07 | 755 | 41 | 1.11 | 823 | 45 | 1.57 | 886 | 48 | 1.86 | 938 | 51 | 1.59 |
| 3600 | 734 | 47 | 1.24 | 786 | 45 | 1.25 | 851 | 49 | 1.77 | 911 | 52 | 2.10 | 962 | 55 | 1.76 |
| 3800 | 764 | 51 | 1.42 | 817 | 50 | 1.41 | 879 | 53 | 2.00 | 936 | 56 | 2.37 | 986 | 59 | 1.94 |
| 4000 | 794 | 54 | 1.63 | 847 | 55 | 1.59 | 907 | 58 | 2.25 | 961 | 61 | 2.67 | 1009 | 63 | 2.14 |
| 4200 | 825 | 57 | 1.88 | 878 | 59 | 1.80 | 935 | 62 | 2.54 | 985 | 65 | 3.01 | 1033 | 68 | 2.37 |
| 4400 | 855 | 61 | 2.16 | 909 | 64 | 2.03 | 962 | 66 | 2.86 | 1010 | 69 | 3.40 | 1057 | 72 | 2.62 |
| 4600 | 885 | 64 | 2.49 | 940 | 68 | 2.28 | 990 | 71 | 3.22 | 1035 | 74 | 3.83 | 1080 | 76 | 2.89 |
| 4800 | 915 | 68 | 2.86 | 971 | 73 | 2.58 | 1018 | 75 | 3.64 | 1060 | 78 | 4.32 | 1104 | 80 | 3.20 |
| 5000 | 945 | 71 | 3.29 | 1002 | 78 | 2.90 | 1046 | 80 | 4.10 | 1084 | 82 | 4.87 | 1128 | 85 | 3.54 |
| CFM | 1.2 | | | 1.4 | | | 1.6 | | | 1.8 | | | 2.0 | | |
| | RPM | DDC % | BHP | RPM | DDC % | BHP | RPM | DDC % | BHP | RPM | DDC % | BHP | RPM | DDC % | BHP |
| 1800 | 855 | 24 | 1.04 | 947 | 29 | 1.15 | 962 | 28 | 1.16 | 985 | 31 | 1.21 | 1056 | 33 | 1.42 |
| 2000 | 874 | 28 | 1.14 | 961 | 33 | 1.25 | 978 | 32 | 1.26 | 1003 | 34 | 1.31 | 1071 | 37 | 1.54 |
| 2200 | 892 | 32 | 1.26 | 976 | 37 | 1.35 | 995 | 36 | 1.36 | 1021 | 38 | 1.42 | 1085 | 41 | 1.66 |
| 2400 | 911 | 35 | 1.40 | 991 | 40 | 1.47 | 1012 | 40 | 1.47 | 1038 | 42 | 1.54 | 1100 | 45 | 1.80 |
| 2600 | 930 | 39 | 1.54 | 1006 | 44 | 1.59 | 1028 | 44 | 1.60 | 1056 | 46 | 1.67 | 1115 | 49 | 1.95 |
| 2800 | 949 | 43 | 1.71 | 1020 | 48 | 1.72 | 1045 | 48 | 1.73 | 1074 | 50 | 1.81 | 1130 | 52 | 2.12 |
| 3000 | 968 | 47 | 1.89 | 1035 | 51 | 1.86 | 1061 | 52 | 1.87 | 1092 | 54 | 1.96 | 1145 | 56 | 2.29 |
| 3200 | 987 | 51 | 2.09 | 1050 | 55 | 2.02 | 1078 | 56 | 2.03 | 1109 | 58 | 2.12 | 1160 | 60 | 2.48 |
| 3400 | 1005 | 55 | 2.30 | 1064 | 58 | 2.19 | 1095 | 60 | 2.20 | 1127 | 62 | 2.30 | 1175 | 64 | 2.69 |
| 3600 | 1024 | 59 | 2.55 | 1079 | 62 | 2.37 | 1111 | 63 | 2.38 | 1145 | 66 | 2.49 | 1190 | 68 | 2.91 |
| 3800 | 1043 | 63 | 2.81 | 1094 | 66 | 2.57 | 1128 | 67 | 2.58 | 1163 | 70 | 2.69 | 1205 | 72 | 3.16 |
| 4000 | 1062 | 67 | 3.11 | 1109 | 69 | 2.78 | 1145 | 71 | 2.79 | 1180 | 73 | 2.92 | 1220 | 75 | 3.42 |
| 4200 | 1081 | 70 | 3.44 | 1123 | 73 | 3.01 | 1161 | 75 | 3.03 | 1198 | 77 | 3.16 | 1235 | 79 | 3.70 |
| 4400 | 1100 | 74 | 3.80 | 1138 | 77 | 3.26 | 1178 | 79 | 3.28 | 1216 | 81 | 3.42 | 1250 | 83 | 4.01 |
| 4600 | 1118 | 78 | 4.20 | 1153 | 80 | 3.53 | 1194 | 83 | 3.55 | 1234 | 85 | 3.71 | 1264 | 87 | 4.35 |
| 4800 | 1137 | 82 | 4.64 | 1167 | 84 | 3.83 | 1211 | 87 | 3.85 | 1251 | 89 | 4.02 | 1279 | 90 | 4.71 |
| 5000 | 1156 | 86 | 5.13 | 1182 | 88 | 4.15 | 1228 | 90 | 4.17 | | | | | | |

Shaded area indicates air flow below 3000 SCFM (300 SCFM/ton) that is not recommended for High Stage cooling or heating.
Valid motor operating range for DDC% setting is 20 - 90.

**HORIZONTAL FLOW**

| CFM | 0.2 | | | 0.4 | | | 0.6 | | | 0.8 | | | 1.0 | | |
|---|---|---|---|---|---|---|---|---|---|---|---|---|---|---|---|
| | RPM | DDC % | BHP | RPM | DDC % | BHP | RPM | DDC % | BHP | RPM | DDC % | BHP | RPM | DDC % | BHP |
| 1800 | | | | | | | | | | 662 | 21 | 0.64 | 752 | 25 | 0.82 |
| 2000 | 445 | 18 | 0.33 | 509 | 17 | 0.50 | 606 | 21 | 0.55 | 681 | 24 | 0.70 | 769 | 28 | 0.91 |
| 2200 | 471 | 22 | 0.37 | 534 | 20 | 0.56 | 629 | 24 | 0.61 | 701 | 28 | 0.78 | 786 | 32 | 1.00 |
| 2400 | 497 | 25 | 0.42 | 560 | 24 | 0.63 | 651 | 28 | 0.67 | 721 | 32 | 0.86 | 804 | 35 | 1.11 |
| 2600 | 522 | 29 | 0.47 | 585 | 28 | 0.72 | 673 | 32 | 0.74 | 741 | 35 | 0.95 | 821 | 39 | 1.22 |
| 2800 | 548 | 32 | 0.53 | 610 | 32 | 0.81 | 695 | 36 | 0.82 | 761 | 39 | 1.05 | 838 | 42 | 1.35 |
| 3000 | 574 | 36 | 0.60 | 636 | 36 | 0.91 | 717 | 39 | 0.91 | 781 | 42 | 1.16 | 855 | 46 | 1.49 |
| 3200 | 600 | 39 | 0.68 | 661 | 40 | 1.03 | 739 | 43 | 1.00 | 801 | 46 | 1.28 | 873 | 49 | 1.65 |
| 3400 | 625 | 43 | 0.77 | 686 | 44 | 1.16 | 761 | 47 | 1.11 | 821 | 50 | 1.42 | 890 | 53 | 1.83 |
| 3600 | 651 | 47 | 0.86 | 712 | 47 | 1.30 | 783 | 51 | 1.23 | 841 | 53 | 1.56 | 907 | 56 | 2.02 |
| 3800 | 677 | 50 | 0.97 | 737 | 51 | 1.47 | 805 | 54 | 1.35 | 861 | 57 | 1.73 | 924 | 60 | 2.23 |
| 4000 | 703 | 54 | 1.10 | 762 | 55 | 1.66 | 827 | 58 | 1.50 | 881 | 60 | 1.91 | 941 | 63 | 2.46 |
| 4200 | 728 | 57 | 1.24 | 787 | 59 | 1.87 | 849 | 62 | 1.65 | 901 | 64 | 2.11 | 959 | 67 | 2.72 |
| 4400 | 754 | 61 | 1.40 | 813 | 63 | 2.11 | 871 | 66 | 1.83 | 921 | 68 | 2.33 | 976 | 70 | 3.01 |
| 4600 | 780 | 64 | 1.57 | 838 | 67 | 2.38 | 893 | 69 | 2.02 | 941 | 71 | 2.58 | 993 | 74 | 3.33 |
| 4800 | 806 | 68 | 1.77 | 863 | 70 | 2.68 | 916 | 73 | 2.23 | 961 | 75 | 2.85 | 1010 | 77 | 3.68 |
| 5000 | 831 | 72 | 2.00 | 889 | 74 | 3.02 | 938 | 77 | 2.47 | 981 | 78 | 3.15 | 1028 | 81 | 4.06 |
| CFM | 1.2 | | | 1.4 | | | 1.6 | | | 1.8 | | | 2.0 | | |
| | RPM | DDC % | BHP | RPM | DDC % | BHP | RPM | DDC % | BHP | RPM | DDC % | BHP | RPM | DDC % | BHP |
| 1800 | 860 | 31 | 0.96 | 942 | 29 | 1.24 | 1012 | 33 | 1.45 | 1050 | 37 | 1.60 | 1105 | 40 | 1.63 |
| 2000 | 873 | 35 | 1.04 | 952 | 33 | 1.34 | 1021 | 37 | 1.58 | 1059 | 40 | 1.73 | 1111 | 43 | 1.73 |
| 2200 | 886 | 38 | 1.13 | 963 | 36 | 1.45 | 1030 | 40 | 1.71 | 1067 | 43 | 1.88 | 1116 | 46 | 1.84 |
| 2400 | 900 | 41 | 1.22 | 973 | 40 | 1.57 | 1039 | 43 | 1.85 | 1076 | 47 | 2.03 | 1122 | 50 | 1.95 |
| 2600 | 913 | 44 | 1.32 | 983 | 43 | 1.70 | 1049 | 47 | 2.00 | 1084 | 50 | 2.20 | 1127 | 53 | 2.07 |
| 2800 | 926 | 47 | 1.43 | 993 | 47 | 1.84 | 1058 | 50 | 2.17 | 1093 | 53 | 2.39 | 1133 | 56 | 2.20 |
| 3000 | 940 | 50 | 1.55 | 1003 | 50 | 2.00 | 1067 | 54 | 2.35 | 1101 | 56 | 2.59 | 1139 | 59 | 2.34 |
| 3200 | 953 | 54 | 1.68 | 1013 | 54 | 2.16 | 1076 | 57 | 2.55 | 1110 | 60 | 2.80 | 1144 | 62 | 2.48 |
| 3400 | 966 | 57 | 1.82 | 1023 | 57 | 2.34 | 1085 | 60 | 2.76 | 1118 | 63 | 3.03 | 1150 | 66 | 2.64 |
| 3600 | 980 | 60 | 1.98 | 1033 | 61 | 2.54 | 1094 | 64 | 2.99 | 1127 | 66 | 3.29 | 1155 | 69 | 2.80 |
| 3800 | 993 | 63 | 2.14 | 1043 | 64 | 2.75 | 1103 | 67 | 3.24 | 1135 | 69 | 3.56 | 1161 | 72 | 2.97 |
| 4000 | 1006 | 66 | 2.32 | 1053 | 68 | 2.98 | 1112 | 70 | 3.51 | 1144 | 73 | 3.86 | 1166 | 75 | 3.16 |
| 4200 | 1019 | 70 | 2.51 | 1063 | 71 | 3.23 | 1122 | 74 | 3.80 | 1152 | 76 | 4.18 | 1172 | 78 | 3.35 |
| 4400 | 1033 | 73 | 2.72 | 1073 | 75 | 3.49 | 1131 | 77 | 4.12 | 1161 | 79 | 4.53 | 1177 | 82 | 3.56 |
| 4600 | 1046 | 76 | 2.95 | 1083 | 78 | 3.79 | 1140 | 81 | 4.46 | 1169 | 83 | 4.90 | 1183 | 85 | 3.78 |
| 4800 | 1059 | 79 | 3.19 | 1094 | 82 | 4.10 | 1149 | 84 | 4.83 | 1178 | 86 | 5.31 | 1188 | 88 | 4.01 |
| 5000 | 1073 | 82 | 3.46 | 1104 | 85 | 4.44 | 1158 | 87 | 5.23 | 1186 | 89 | 5.76 | 1194 | 90 | 4.26 |

Shaded area indicates air flow below 3000 SCFM (300 SCFM/ton) that is not recommended for High Stage cooling or heating.
Valid motor operating range for DDC% setting is 20 - 90.

**12.5 Ton Models: DHG1503D, DHG1504D & DHG1507D with DDC Controls • Standard Static to 3.5 HP (0.2 ~ 0.8 ESP) • Down Flow**

| CFM | 0.2 | | | 0.4 | | | 0.6 | | | 0.8 | | | 1.0 | | |
|---|---|---|---|---|---|---|---|---|---|---|---|---|---|---|---|
| | RPM | DDC % | BHP | RPM | DDC % | BHP | RPM | DDC % | BHP | RPM | DDC % | BHP | RPM | DDC % | BHP |
| **2000** | | | | | | | 601 | 20 | 0.62 | 677 | 22 | 0.67 | - | - | - |
| **2200** | 537 | 21 | 0.51 | 595 | 23 | 0.66 | 627 | 24 | 0.70 | 700 | 27 | 0.75 | - | - | - |
| **2400** | 561 | 25 | 0.58 | 620 | 27 | 0.75 | 653 | 28 | 0.79 | 724 | 31 | 0.85 | - | - | - |
| **2600** | 585 | 29 | 0.65 | 644 | 31 | 0.84 | 680 | 33 | 0.89 | 747 | 35 | 0.96 | - | - | - |
| **2800** | 610 | 33 | 0.74 | 668 | 35 | 0.95 | 706 | 37 | 1.00 | 770 | 39 | 1.08 | - | - | - |
| **3000** | 634 | 37 | 0.83 | 692 | 39 | 1.07 | 733 | 41 | 1.13 | 793 | 43 | 1.22 | - | - | - |
| **3200** | 658 | 41 | 0.93 | 717 | 43 | 1.21 | 759 | 45 | 1.28 | 817 | 47 | 1.37 | - | - | - |
| **3400** | 682 | 45 | 1.05 | 741 | 47 | 1.36 | 786 | 49 | 1.44 | 840 | 51 | 1.55 | - | - | - |
| **3600** | 707 | 49 | 1.19 | 765 | 52 | 1.54 | 812 | 54 | 1.62 | 863 | 56 | 1.74 | - | - | - |
| **3800** | 731 | 54 | 1.34 | 789 | 56 | 1.73 | 838 | 58 | 1.83 | 886 | 60 | 1.97 | - | - | - |
| **4000** | 755 | 58 | 1.51 | 814 | 60 | 1.96 | 865 | 62 | 2.06 | 909 | 64 | 2.22 | - | - | - |
| **4200** | 779 | 62 | 1.70 | 838 | 64 | 2.20 | 891 | 66 | 2.33 | 933 | 68 | 2.50 | - | - | - |
| **4400** | 804 | 66 | 1.92 | 862 | 68 | 2.49 | 918 | 70 | 2.62 | 956 | 72 | 2.82 | - | - | - |
| **4600** | 828 | 70 | 2.16 | 886 | 72 | 2.80 | 944 | 74 | 2.96 | 979 | 74 | 3.18 | - | - | - |

Shaded area indicates air flow below 3750 SCFM (300 SCFM/ton) that is not recommended for High Stage cooling or heating.
Valid motor operating range for DDC% setting is 20 - 90.

**HORIZONTAL FLOW**

| CFM | 0.2 | | | 0.4 | | | 0.6 | | | 0.8 | | | 1.0 | | |
|---|---|---|---|---|---|---|---|---|---|---|---|---|---|---|---|
| | RPM | DDC % | BHP | RPM | DDC % | BHP | RPM | DDC % | BHP | RPM | DDC % | BHP | RPM | DDC % | BHP |
| **2000** | | | | | | | | | | | | | - | - | - |
| **2200** | | | | | | | | | | 691 | 22 | 0.70 | - | - | - |
| **2400** | 520 | 23 | 0.57 | 577 | 18 | 0.62 | 653 | 24 | 0.66 | 713 | 26 | 0.77 | - | - | - |
| **2600** | 547 | 27 | 0.65 | 603 | 23 | 0.70 | 677 | 29 | 0.73 | 736 | 31 | 0.85 | - | - | - |
| **2800** | 574 | 31 | 0.73 | 630 | 28 | 0.79 | 700 | 33 | 0.81 | 759 | 35 | 0.94 | - | - | - |
| **3000** | 601 | 36 | 0.82 | 657 | 33 | 0.89 | 724 | 38 | 0.89 | 781 | 40 | 1.04 | - | - | - |
| **3200** | 629 | 40 | 0.93 | 683 | 38 | 1.00 | 748 | 42 | 0.99 | 804 | 45 | 1.15 | - | - | - |
| **3400** | 656 | 44 | 1.05 | 710 | 43 | 1.13 | 772 | 47 | 1.09 | 827 | 49 | 1.27 | - | - | - |
| **3600** | 683 | 48 | 1.18 | 736 | 48 | 1.27 | 796 | 51 | 1.21 | 849 | 54 | 1.41 | - | - | - |
| **3800** | 710 | 53 | 1.33 | 763 | 52 | 1.43 | 820 | 56 | 1.33 | 872 | 58 | 1.56 | - | - | - |
| **4000** | 737 | 57 | 1.50 | 789 | 57 | 1.62 | 844 | 60 | 1.47 | 895 | 63 | 1.72 | - | - | - |
| **4200** | 764 | 61 | 1.69 | 816 | 62 | 1.82 | 868 | 65 | 1.63 | 917 | 67 | 1.90 | - | - | - |
| **4400** | 791 | 66 | 1.91 | 842 | 67 | 2.06 | 892 | 70 | 1.80 | 940 | 72 | 2.10 | - | - | - |
| **4600** | 819 | 70 | 2.15 | 869 | 72 | 2.32 | 916 | 74 | 1.99 | 963 | 74 | 2.32 | - | - | - |
| **4800** | 846 | 74 | 2.42 | 896 | 74 | 2.61 | | | | | | | - | - | - |

Shaded area indicates air flow below 3750 SCFM (300 SCFM/ton) that is not recommended for High Stage cooling or heating.
Valid motor operating range for DDC% setting is 20 - 90.

**12.5 Ton Models: DHG1503L, DHG1504L & DHG1507L with DDC Controls • Medium Static to 3.5 HP (0.2 ~ 1.4 ESP) • Down Flow**

| CFM | 0.2 | | | 0.4 | | | 0.6 | | | 0.8 | | | 1.0 | | |
|---|---|---|---|---|---|---|---|---|---|---|---|---|---|---|---|
| | RPM | DDC % | BHP | RPM | DDC % | BHP | RPM | DDC % | BHP | RPM | DDC % | BHP | RPM | DDC % | BHP |
| 2200 | 537 | 21 | 0.51 | 595 | 23 | 0.66 | 627 | 24 | 0.70 | 700 | 27 | 0.76 | 764 | 29 | 0.87 |
| 2400 | 561 | 25 | 0.58 | 620 | 27 | 0.75 | 653 | 28 | 0.79 | 724 | 31 | 0.84 | 785 | 33 | 0.96 |
| 2600 | 585 | 29 | 0.65 | 644 | 31 | 0.84 | 680 | 33 | 0.89 | 747 | 35 | 0.93 | 806 | 37 | 1.06 |
| 2800 | 610 | 33 | 0.74 | 668 | 35 | 0.95 | 706 | 37 | 1.00 | 770 | 39 | 1.03 | 827 | 41 | 1.18 |
| 3000 | 634 | 37 | 0.83 | 692 | 39 | 1.07 | 733 | 41 | 1.13 | 793 | 43 | 1.14 | 848 | 45 | 1.30 |
| 3200 | 658 | 41 | 0.93 | 717 | 43 | 1.21 | 759 | 45 | 1.28 | 817 | 47 | 1.26 | 869 | 49 | 1.44 |
| 3400 | 682 | 45 | 1.05 | 741 | 47 | 1.36 | 786 | 49 | 1.44 | 840 | 51 | 1.39 | 890 | 53 | 1.59 |
| 3600 | 707 | 49 | 1.19 | 765 | 52 | 1.54 | 812 | 54 | 1.62 | 863 | 56 | 1.54 | 911 | 58 | 1.76 |
| 3800 | 731 | 54 | 1.34 | 789 | 56 | 1.73 | 838 | 58 | 1.83 | 886 | 60 | 1.70 | 932 | 62 | 1.94 |
| 4000 | 755 | 58 | 1.51 | 814 | 60 | 1.96 | 865 | 62 | 2.06 | 909 | 64 | 1.88 | 953 | 66 | 2.14 |
| 4200 | 779 | 62 | 1.70 | 838 | 64 | 2.20 | 891 | 66 | 2.33 | 933 | 68 | 2.08 | 974 | 70 | 2.37 |
| 4400 | 804 | 66 | 1.92 | 862 | 68 | 2.49 | 918 | 70 | 2.62 | 956 | 72 | 2.30 | 995 | 74 | 2.62 |
| 4600 | 828 | 70 | 2.16 | 886 | 72 | 2.80 | 944 | 74 | 2.96 | 979 | 74 | 2.54 | | | |
| 4800 | 852 | 74 | 2.44 | 911 | 74 | 3.16 | | | | | | | | | |
| 5000 | | | | | | | | | | | | | | | |

| CFM | 1.2 | | | 1.4 | | | 1.6 | | | 1.8 | | | 2.0 | | |
|---|---|---|---|---|---|---|---|---|---|---|---|---|---|---|---|
| | RPM | DDC % | BHP | RPM | DDC % | BHP | RPM | DDC % | BHP | RPM | DDC % | BHP | RPM | DDC % | BHP |
| 2200 | 825 | 31 | 1.09 | 938 | 42 | 0.93 | - | - | - | - | - | - | - | - | - |
| 2400 | 844 | 35 | 1.20 | 949 | 45 | 1.20 | - | - | - | - | - | - | - | - | - |
| 2600 | 863 | 39 | 1.33 | 961 | 48 | 1.33 | - | - | - | - | - | - | - | - | - |
| 2800 | 883 | 43 | 1.47 | 972 | 51 | 1.47 | - | - | - | - | - | - | - | - | - |
| 3000 | 902 | 48 | 1.62 | 984 | 54 | 1.62 | - | - | - | - | - | - | - | - | - |
| 3200 | 921 | 52 | 1.79 | 996 | 57 | 1.79 | - | - | - | - | - | - | - | - | - |
| 3400 | 940 | 56 | 1.98 | 1007 | 60 | 1.98 | - | - | - | - | - | - | - | - | - |
| 3600 | 959 | 60 | 2.19 | 1019 | 63 | 2.19 | - | - | - | - | - | - | - | - | - |
| 3800 | 978 | 64 | 2.42 | 1030 | 66 | 2.42 | - | - | - | - | - | - | - | - | - |
| 4000 | 997 | 68 | 2.67 | 1042 | 69 | 2.67 | - | - | - | - | - | - | - | - | - |
| 4200 | 1016 | 72 | 2.96 | 1054 | 72 | 2.96 | - | - | - | - | - | - | - | - | - |
| 4400 | 1036 | 74 | 3.27 | 1065 | 74 | 3.27 | - | - | - | - | - | - | - | - | - |
| 4600 | | | | | | | - | - | - | - | - | - | - | - | - |
| 4800 | | | | | | | - | - | - | - | - | - | - | - | - |
| 5000 | | | | | | | - | - | - | - | - | - | - | - | - |

Shaded area indicates air flow below 3750 SCFM (300 SCFM/ton) that is not recommended for High Stage cooling or heating.
Valid motor operating range for DDC% setting is 20 - 90.

**HORIZONTAL FLOW**

| CFM | 0.2 | | | 0.4 | | | 0.6 | | | 0.8 | | | 1.0 | | |
|---|---|---|---|---|---|---|---|---|---|---|---|---|---|---|---|
| | RPM | DDC % | BHP | RPM | DDC % | BHP | RPM | DDC % | BHP | RPM | DDC % | BHP | RPM | DDC % | BHP |
| 2200 | 493 | 18 | 0.51 | 550 | 13 | 0.55 | 629 | 19 | 0.60 | 691 | 22 | 0.70 | 750 | 23 | 0.83 |
| 2400 | 520 | 23 | 0.57 | 577 | 18 | 0.62 | 653 | 24 | 0.66 | 713 | 26 | 0.77 | 771 | 28 | 0.91 |
| 2600 | 547 | 27 | 0.65 | 603 | 23 | 0.70 | 677 | 29 | 0.73 | 736 | 31 | 0.85 | 793 | 32 | 1.01 |
| 2800 | 574 | 31 | 0.73 | 630 | 28 | 0.79 | 700 | 33 | 0.81 | 759 | 35 | 0.94 | 814 | 37 | 1.12 |
| 3000 | 601 | 36 | 0.82 | 657 | 33 | 0.89 | 724 | 38 | 0.89 | 781 | 40 | 1.04 | 835 | 42 | 1.23 |
| 3200 | 629 | 40 | 0.93 | 683 | 38 | 1.00 | 748 | 42 | 0.99 | 804 | 45 | 1.15 | 857 | 46 | 1.36 |
| 3400 | 656 | 44 | 1.05 | 710 | 43 | 1.13 | 772 | 47 | 1.09 | 827 | 49 | 1.27 | 878 | 51 | 1.51 |
| 3600 | 683 | 48 | 1.18 | 736 | 48 | 1.27 | 796 | 51 | 1.21 | 849 | 54 | 1.41 | 900 | 55 | 1.67 |
| 3800 | 710 | 53 | 1.33 | 763 | 52 | 1.43 | 820 | 56 | 1.33 | 872 | 58 | 1.56 | 921 | 60 | 1.84 |
| 4000 | 737 | 57 | 1.50 | 789 | 57 | 1.62 | 844 | 60 | 1.47 | 895 | 63 | 1.72 | 942 | 65 | 2.03 |
| 4200 | 764 | 61 | 1.69 | 816 | 62 | 1.82 | 868 | 65 | 1.63 | 917 | 67 | 1.90 | 964 | 69 | 2.25 |
| 4400 | 791 | 66 | 1.91 | 842 | 67 | 2.06 | 892 | 70 | 1.80 | 940 | 72 | 2.10 | 985 | 74 | 2.48 |
| 4600 | 819 | 70 | 2.15 | 869 | 72 | 2.32 | 916 | 74 | 1.99 | 963 | 74 | 2.32 | | | |
| 4800 | 846 | 74 | 2.42 | 896 | 74 | 2.61 | | | | | | | | | |
| 5000 | | | | | | | | | | | | | | | |

| CFM | 1.2 | | | 1.4 | | | 1.6 | | | 1.8 | | | 2.0 | | |
|---|---|---|---|---|---|---|---|---|---|---|---|---|---|---|---|
| | RPM | DDC % | BHP | RPM | DDC % | BHP | RPM | DDC % | BHP | RPM | DDC % | BHP | RPM | DDC % | BHP |
| 2200 | 804 | 28 | 1.06 | 862 | 27 | 1.24 | - | - | - | - | - | - | - | - | - |
| 2400 | 825 | 32 | 1.17 | 881 | 32 | 1.37 | - | - | - | - | - | - | - | - | - |
| 2600 | 845 | 36 | 1.29 | 900 | 37 | 1.52 | - | - | - | - | - | - | - | - | - |
| 2800 | 866 | 41 | 1.42 | 919 | 41 | 1.68 | - | - | - | - | - | - | - | - | - |
| 3000 | 887 | 45 | 1.57 | 938 | 46 | 1.85 | - | - | - | - | - | - | - | - | - |
| 3200 | 907 | 49 | 1.74 | 957 | 51 | 2.05 | - | - | - | - | - | - | - | - | - |
| 3400 | 928 | 54 | 1.92 | 976 | 55 | 2.26 | - | - | - | - | - | - | - | - | - |
| 3600 | 948 | 58 | 2.13 | 995 | 60 | 2.50 | - | - | - | - | - | - | - | - | - |
| 3800 | 969 | 62 | 2.35 | 1013 | 65 | 2.76 | - | - | - | - | - | - | - | - | - |
| 4000 | 989 | 66 | 2.60 | 1032 | 69 | 3.05 | - | - | - | - | - | - | - | - | - |
| 4200 | 1010 | 71 | 2.87 | 1051 | 74 | 3.38 | - | - | - | - | - | - | - | - | - |
| 4400 | 1030 | 74 | 3.17 | | | | - | - | - | - | - | - | - | - | - |
| 4600 | | | | | | | - | - | - | - | - | - | - | - | - |
| 4800 | | | | | | | - | - | - | - | - | - | - | - | - |
| 5000 | | | | | | | - | - | - | - | - | - | - | - | - |

Shaded area indicates air flow below 3750 SCFM (300 SCFM/ton) that is not recommended for High Stage cooling or heating.
Valid motor operating range for DDC% setting is 20 - 90.

**12.5 Ton Models: DHG1503W, DHG1504W & DHG1507W with DDC Controls • High Static to 5.0 HP (0.2 ~ 2.0 ESP) • Down Flow**

| CFM | 0.2 | | | 0.4 | | | 0.6 | | | 0.8 | | | 1.0 | | |
|---|---|---|---|---|---|---|---|---|---|---|---|---|---|---|---|
| | RPM | DDC % | BHP | RPM | DDC % | BHP | RPM | DDC % | BHP | RPM | DDC % | BHP | RPM | DDC % | BHP |
| 2400 | 635 | 29 | 0.78 | 732 | 33 | 1.02 | 812 | 38 | 1.06 | 877 | 41 | 1.32 | 945 | 43 | 1.45 |
| 2600 | 667 | 33 | 0.89 | 758 | 37 | 1.14 | 835 | 41 | 1.18 | 898 | 44 | 1.46 | 964 | 46 | 1.58 |
| 2800 | 699 | 37 | 1.03 | 785 | 41 | 1.29 | 859 | 45 | 1.30 | 919 | 47 | 1.61 | 982 | 50 | 1.71 |
| 3000 | 731 | 41 | 1.18 | 811 | 44 | 1.45 | 882 | 48 | 1.44 | 939 | 51 | 1.78 | 1000 | 53 | 1.85 |
| 3200 | 763 | 45 | 1.36 | 838 | 48 | 1.64 | 906 | 52 | 1.59 | 960 | 54 | 1.97 | 1018 | 57 | 2.00 |
| 3400 | 795 | 49 | 1.56 | 864 | 52 | 1.85 | 929 | 55 | 1.75 | 980 | 57 | 2.18 | 1036 | 60 | 2.17 |
| 3600 | 827 | 53 | 1.80 | 891 | 55 | 2.09 | 953 | 59 | 1.94 | 1001 | 61 | 2.40 | 1055 | 64 | 2.35 |
| 3800 | 859 | 57 | 2.07 | 917 | 59 | 2.35 | 976 | 62 | 2.14 | 1021 | 64 | 2.66 | 1073 | 67 | 2.55 |
| 4000 | 891 | 61 | 2.38 | 944 | 62 | 2.65 | 1000 | 65 | 2.37 | 1042 | 67 | 2.94 | 1091 | 70 | 2.76 |
| 4200 | 923 | 64 | 2.74 | 970 | 66 | 2.99 | 1023 | 69 | 2.62 | 1063 | 71 | 3.25 | 1109 | 74 | 2.99 |
| 4400 | 955 | 68 | 3.15 | 997 | 70 | 3.37 | 1047 | 72 | 2.89 | 1083 | 74 | 3.59 | 1128 | 77 | 3.24 |
| 4600 | 987 | 72 | 3.62 | 1023 | 73 | 3.80 | 1070 | 76 | 3.20 | 1104 | 77 | 3.96 | 1146 | 81 | 3.51 |
| 4800 | 1019 | 76 | 4.16 | 1050 | 77 | 4.28 | 1094 | 79 | 3.53 | 1124 | 81 | 4.38 | 1164 | 84 | 3.80 |
| 5000 | 1051 | 80 | 4.79 | 1076 | 81 | 4.83 | 1117 | 83 | 3.91 | 1145 | 84 | 4.84 | 1182 | 88 | 4.12 |

**DOWNFLOW**

| CFM | 1.2 | | | 1.4 | | | 1.6 | | | 1.8 | | | 2.0 | | |
|---|---|---|---|---|---|---|---|---|---|---|---|---|---|---|---|
| | RPM | DDC % | BHP | RPM | DDC % | BHP | RPM | DDC % | BHP | RPM | DDC % | BHP | RPM | DDC % | BHP |
| 2400 | 1010 | 47 | 1.84 | 1065 | 50 | 2.10 | 1102 | 52 | 2.13 | 1159 | 55 | 2.30 | 1193 | 56 | 2.70 |
| 2600 | 1027 | 51 | 1.99 | 1081 | 53 | 2.28 | 1121 | 55 | 2.31 | 1179 | 58 | 2.49 | 1213 | 60 | 2.93 |
| 2800 | 1044 | 54 | 2.16 | 1097 | 56 | 2.47 | 1139 | 59 | 2.51 | 1199 | 62 | 2.70 | 1233 | 63 | 3.17 |
| 3000 | 1061 | 57 | 2.34 | 1112 | 59 | 2.68 | 1158 | 62 | 2.71 | 1219 | 65 | 2.93 | 1252 | 66 | 3.43 |
| 3200 | 1077 | 60 | 2.53 | 1128 | 62 | 2.90 | 1176 | 65 | 2.94 | 1240 | 68 | 3.17 | 1272 | 70 | 3.72 |
| 3400 | 1094 | 63 | 2.74 | 1144 | 65 | 3.14 | 1195 | 68 | 3.18 | 1260 | 72 | 3.44 | 1291 | 73 | 4.03 |
| 3600 | 1111 | 66 | 2.97 | 1159 | 69 | 3.40 | 1213 | 72 | 3.45 | 1280 | 75 | 3.72 | 1311 | 76 | 4.37 |
| 3800 | 1128 | 70 | 3.22 | 1175 | 72 | 3.68 | 1232 | 75 | 3.74 | 1300 | 78 | 4.03 | 1331 | 80 | 4.73 |
| 4000 | 1145 | 73 | 3.49 | 1191 | 75 | 3.99 | 1250 | 78 | 4.05 | 1321 | 82 | 4.37 | 1350 | 83 | 5.12 |
| 4200 | 1161 | 76 | 3.78 | 1206 | 78 | 4.32 | 1269 | 81 | 4.39 | 1341 | 85 | 4.73 | | | |
| 4400 | 1178 | 79 | 4.09 | 1222 | 81 | 4.68 | 1288 | 85 | 4.75 | 1361 | 89 | 5.12 | | | |
| 4600 | 1195 | 82 | 4.43 | 1238 | 84 | 5.07 | | | | | | | | | |
| 4800 | 1212 | 85 | 4.80 | | | | | | | | | | | | |
| 5000 | | | | | | | | | | | | | | | |

Shaded area indicates air flow below 3750 SCFM (300 SCFM/ton) that is not recommended for High Stage cooling or heating.
Valid motor operating range for DDC% setting is 20 - 90.

**HORIZONTAL FLOW**

| CFM | 0.2 | | | 0.4 | | | 0.6 | | | 0.8 | | | 1.0 | | |
|---|---|---|---|---|---|---|---|---|---|---|---|---|---|---|---|
| | RPM | DDC % | BHP | RPM | DDC % | BHP | RPM | DDC % | BHP | RPM | DDC % | BHP | RPM | DDC % | BHP |
| 2400 | 509 | 23 | 0.44 | 590 | 24 | 0.66 | 674 | 27 | 0.86 | 767 | 32 | 0.98 | 838 | 35 | 0.95 |
| 2600 | 534 | 26 | 0.49 | 613 | 28 | 0.74 | 694 | 31 | 0.97 | 782 | 36 | 1.08 | 851 | 39 | 1.03 |
| 2800 | 560 | 30 | 0.56 | 635 | 32 | 0.83 | 714 | 35 | 1.10 | 797 | 39 | 1.19 | 865 | 42 | 1.12 |
| 3000 | 586 | 34 | 0.63 | 657 | 36 | 0.94 | 734 | 39 | 1.23 | 811 | 42 | 1.32 | 878 | 45 | 1.21 |
| 3200 | 612 | 38 | 0.71 | 680 | 40 | 1.06 | 754 | 42 | 1.39 | 826 | 46 | 1.46 | 891 | 49 | 1.31 |
| 3400 | 638 | 42 | 0.80 | 702 | 44 | 1.19 | 774 | 46 | 1.57 | 841 | 49 | 1.61 | 904 | 52 | 1.42 |
| 3600 | 664 | 46 | 0.90 | 724 | 48 | 1.35 | 793 | 50 | 1.77 | 856 | 53 | 1.78 | 918 | 56 | 1.54 |
| 3800 | 690 | 50 | 1.01 | 747 | 51 | 1.52 | 813 | 54 | 2.00 | 870 | 56 | 1.97 | 931 | 59 | 1.67 |
| 4000 | 716 | 53 | 1.14 | 769 | 55 | 1.71 | 833 | 57 | 2.25 | 885 | 60 | 2.18 | 944 | 62 | 1.80 |
| 4200 | 742 | 57 | 1.29 | 792 | 59 | 1.93 | 853 | 61 | 2.54 | 900 | 63 | 2.40 | 957 | 65 | 1.95 |
| 4400 | 768 | 61 | 1.45 | 814 | 63 | 2.18 | 873 | 65 | 2.86 | 915 | 67 | 2.66 | 971 | 69 | 2.12 |
| 4600 | 793 | 65 | 1.64 | 836 | 67 | 2.45 | 893 | 68 | 3.22 | 930 | 70 | 2.94 | 984 | 72 | 2.29 |
| 4800 | 819 | 69 | 1.85 | 859 | 71 | 2.77 | 913 | 72 | 3.64 | 944 | 74 | 3.25 | 997 | 76 | 2.48 |
| 5000 | 845 | 73 | 2.08 | 881 | 75 | 3.12 | 932 | 76 | 4.10 | 959 | 77 | 3.59 | 1010 | 79 | 2.69 |
| 5200 | 871 | 76 | 2.35 | 903 | 78 | 3.52 | 952 | 80 | 4.62 | 974 | 81 | 3.96 | 1024 | 82 | 2.92 |
| 5400 | 897 | 80 | 2.65 | 926 | 82 | 3.97 | 972 | 83 | 5.21 | 989 | 84 | 4.38 | 1037 | 86 | 3.16 |
| 5600 | 923 | 84 | 2.99 | 948 | 86 | 4.47 | 992 | 87 | 5.88 | 1003 | 87 | 4.84 | 1050 | 89 | 3.42 |
| CFM | 1.2 | | | 1.4 | | | 1.6 | | | 1.8 | | | 2.0 | | |
| | RPM | DDC % | BHP | RPM | DDC % | BHP | RPM | DDC % | BHP | RPM | DDC % | BHP | RPM | DDC % | BHP |
| 2400 | 908 | 38 | 1.20 | 979 | 42 | 1.45 | 1053 | 43 | 1.59 | 1114 | 45 | 1.86 | 1134 | 47 | 1.87 |
| 2600 | 919 | 42 | 1.30 | 988 | 45 | 1.57 | 1059 | 47 | 1.69 | 1119 | 49 | 1.97 | 1139 | 50 | 1.98 |
| 2800 | 929 | 45 | 1.41 | 997 | 48 | 1.70 | 1064 | 50 | 1.79 | 1123 | 52 | 2.09 | 1144 | 54 | 2.11 |
| 3000 | 940 | 48 | 1.53 | 1007 | 51 | 1.85 | 1070 | 53 | 1.90 | 1127 | 55 | 2.22 | 1150 | 57 | 2.24 |
| 3200 | 951 | 51 | 1.66 | 1016 | 54 | 2.00 | 1075 | 56 | 2.02 | 1131 | 58 | 2.36 | 1155 | 60 | 2.37 |
| 3400 | 961 | 54 | 1.79 | 1025 | 57 | 2.17 | 1081 | 60 | 2.14 | 1135 | 62 | 2.51 | 1161 | 64 | 2.52 |
| 3600 | 972 | 58 | 1.94 | 1035 | 61 | 2.35 | 1086 | 63 | 2.28 | 1139 | 65 | 2.66 | 1166 | 67 | 2.68 |
| 3800 | 983 | 61 | 2.11 | 1044 | 64 | 2.54 | 1092 | 66 | 2.42 | 1143 | 68 | 2.83 | 1172 | 70 | 2.84 |
| 4000 | 993 | 64 | 2.28 | 1053 | 67 | 2.75 | 1097 | 70 | 2.57 | 1148 | 72 | 3.00 | 1177 | 73 | 3.02 |
| 4200 | 1004 | 67 | 2.47 | 1063 | 70 | 2.98 | 1103 | 73 | 2.73 | 1152 | 75 | 3.19 | 1183 | 77 | 3.20 |
| 4400 | 1014 | 71 | 2.68 | 1072 | 73 | 3.23 | 1108 | 76 | 2.89 | 1156 | 78 | 3.38 | 1188 | 80 | 3.40 |
| 4600 | 1025 | 74 | 2.90 | 1081 | 77 | 3.50 | 1114 | 79 | 3.07 | 1160 | 81 | 3.59 | 1194 | 83 | 3.61 |
| 4800 | 1036 | 77 | 3.14 | 1091 | 80 | 3.79 | 1119 | 83 | 3.26 | 1164 | 85 | 3.81 | 1199 | 86 | 3.84 |
| 5000 | 1046 | 80 | 3.40 | 1100 | 83 | 4.11 | 1125 | 86 | 3.46 | 1168 | 88 | 4.05 | 1205 | 90 | 4.07 |
| 5200 | 1057 | 83 | 3.69 | 1109 | 86 | 4.45 | 1130 | 89 | 3.68 | | | | | | |
| 5400 | 1068 | 87 | 3.99 | 1119 | 89 | 4.82 | | | | | | | | | |
| 5600 | 1078 | 90 | 4.33 | | | | | | | | | | | | |

Shaded area indicates air flow below 3750 SCFM (300 SCFM/ton) that is not recommended for High Stage cooling or heating.
Valid motor operating range for DDC% setting is 20 - 90.

# Static Pressure

| 7.5-12.5 TONS | | |
|---|---|---|
| DOWNFLOW ECONOMIZER PRESSURE DROP | | |
| Cabinet | CFM | SP in.wg. |
| 7.5 Ton | 2250 | .04" |
| | 3000 | .07" |
| | 3750 | .11" |
| 8.5 Ton | 2550 | .06" |
| | 3400 | .10" |
| | 4250 | .16" |
| 10 Ton | 3000 | .08" |
| | 4000 | .13" |
| | 5000 | .22" |
| 12.5 Ton | 3750 | .14" |
| | 5000 | .24" |
| | 6250 | .36" |

| 7.5-12.5 TONS | | |
|---|---|---|
| HORIZONTAL ECONOMIZER PRESSURE DROP | | |
| Cabinet | CFM | SP in.wg. |
| 7.5 Ton | 2250 | .05" |
| | 3000 | .07" |
| | 3750 | .13" |
| 8.5 Ton | 2550 | .07" |
| | 3400 | .13" |
| | 4250 | .18" |
| 10 Ton | 3000 | .07" |
| | 4000 | .12" |
| | 5000 | .19" |
| 12.5 Ton | 3750 | .09" |
| | 5000 | .15" |
| | 6250 | .24" |

# Electrical Data

| Model Number | Electrical Rating | Compressor | | | Outdoor Fan Motor | | | Indoor Fan Motor | | | Optional Powered Convenience Outlet | Optional Power Exhaust | Power Supply | |
|---|---|---|---|---|---|---|---|---|---|---|---|---|---|---|
| | | QTY | RLA | LRA | QTY | HP | FLA | QTY | HP | FLA | FLA | FLA | MCA | MOP |
| DHG0903D | 208/230/3/60 | 2 | 12.2 | 120 | 2 | 0.33 | 2.0 | 1 | 2.4 | 8.0 | - | - | 39.4/39.4 | 50/50 |
| | | | | | | | | | | | 9.6/8.7 | - | 49.0/48.1 | 60/60 |
| | | | | | | | | | | | - | 3.3/3.0 (2.4) | 42.7/42.4 | 50/50 |
| | | | | | | | | | | | 9.6/8.7 | 3.3/3.0 (2.4) | 52.3/51.1 | 60/60 |
| DHG0903L | 208/230/3/60 | 2 | 12.2 | 120 | 2 | 0.33 | 2.0 | 1 | 2.4 | 8.0 | - | - | 39.4/39.4 | 50/50 |
| | | | | | | | | | | | 9.6/8.7 | - | 49.0/48.1 | 60/60 |
| | | | | | | | | | | | - | 3.3/3.0 (2.4) | 42.7/42.4 | 50/50 |
| | | | | | | | | | | | 9.6/8.7 | 3.3/3.0 (2.4) | 52.3/51.1 | 60/60 |
| DHG0903W | 208/230/3/60 | 2 | 12.2 | 120 | 2 | 0.33 | 2.0 | 1 | 3.5 | 10.9 | - | - | 42.3/42.3 | 50/50 |
| | | | | | | | | | | | 9.6/8.7 | - | 51.9/51.0 | 60/60 |
| | | | | | | | | | | | - | 3.3/3.0 (2.4) | 45.6/45.3 | 50/50 |
| | | | | | | | | | | | 9.6/8.7 | 3.3/3.0 (2.4) | 55.2/54.0 | 60/60 |
| DHG0904D | 460/3/60 | 2 | 5.8 | 55.1 | 2 | 0.33 | 0.85 | 1 | 2.4 | 5.4 | - | - | 20.1 | 25 |
| | | | | | | | | | | | 4.3 | - | 24.4 | 30 |
| | | | | | | | | | | | - | 1.2 (1.0) | 21.3 | 25 |
| | | | | | | | | | | | 4.3 | 1.2 (1.0) | 25.6 | 30 |
| DHG0904L | 460/3/60 | 2 | 5.8 | 55.1 | 2 | 0.33 | 0.85 | 1 | 2.4 | 5.4 | - | - | 20.1 | 25 |
| | | | | | | | | | | | 4.3 | - | 24.4 | 30 |
| | | | | | | | | | | | - | 1.2 (1.0) | 21.3 | 25 |
| | | | | | | | | | | | 4.3 | 1.2 (1.0) | 25.6 | 30 |
| DHG0904W | 460/3/60 | 2 | 5.8 | 55.1 | 2 | 0.33 | 0.85 | 1 | 3.5 | 7.2 | - | - | 21.9 | 25 |
| | | | | | | | | | | | 4.3 | - | 26.2 | 30 |
| | | | | | | | | | | | - | 1.2 (1.0) | 23.1 | 30 |
| | | | | | | | | | | | 4.3 | 1.2 (1.0) | 27.4 | 30 |
| DHG0907D | 575/3/60 | 2 | 5.8 | 41.0 | 2 | 0.33 | 0.67 | 1 | 2.4 | 4.0 | - | - | 18.3 | 20 |
| | | | | | | | | | | | 3.5 | - | 21.8 | 25 |
| | | | | | | | | | | | - | 1.3 | 19.6 | 25 |
| | | | | | | | | | | | 3.5 | 1.3 | 23.1 | 25 |
| DHG0907L | 575/3/60 | 2 | 5.8 | 41.0 | 2 | 0.33 | 0.67 | 1 | 2.4 | 4.0 | - | - | 18.3 | 20 |
| | | | | | | | | | | | 3.5 | - | 21.8 | 25 |
| | | | | | | | | | | | - | 1.3 | 19.6 | 25 |
| | | | | | | | | | | | 3.5 | 1.3 | 23.1 | 25 |
| DHG0907W | 575/3/60 | 2 | 5.8 | 41.0 | 2 | 0.33 | 0.67 | 1 | 3.5 | 5.0 | - | - | 19.3 | 25 |
| | | | | | | | | | | | 3.5 | - | 22.8 | 25 |
| | | | | | | | | | | | - | 1.3 | 20.6 | 25 |
| | | | | | | | | | | | 3.5 | 1.3 | 24.1 | 25 |
| DHG1023D | 208/230/3/60 | 2 | 14.1 | 120 | 2 | 0.33 | 2.0 | 1 | 2.4 | 8.0 | - | - | 43.7/43.7 | 50/50 |
| | | | | | | | | | | | 9.6/8.7 | - | 53.3/52.4 | 60/60 |
| | | | | | | | | | | | - | 3.3/3.0 (2.4) | 47.0/46.7 | 60/60 |
| | | | | | | | | | | | 9.6/8.7 | 3.3/3.0 (2.4) | 56.6/55.4 | 60/60 |
| DHG1023L | 208/230/3/60 | 2 | 14.1 | 120 | 2 | 0.33 | 2.0 | 1 | 3.5 | 10.9 | - | - | 46.6/46.6 | 60/60 |
| | | | | | | | | | | | 9.6/8.7 | - | 56.2/55.3 | 70/60 |
| | | | | | | | | | | | - | 3.3/3.0 (2.4) | 49.9/49.6 | 60/60 |
| | | | | | | | | | | | 9.6/8.7 | 3.3/3.0 (2.4) | 59.5/58.3 | 70/70 |
| DHG1023W | 208/230/3/60 | 2 | 14.1 | 120 | 2 | 0.33 | 2.0 | 1 | 3.5 | 10.9 | - | - | 46.6/46.6 | 60/60 |
| | | | | | | | | | | | 9.6/8.7 | - | 56.2/55.3 | 70/60 |
| | | | | | | | | | | | - | 3.3/3.0 (2.4) | 49.9/49.6 | 60/60 |
| | | | | | | | | | | | 9.6/8.7 | 3.3/3.0 (2.4) | 59.5/58.3 | 70/70 |
| DHG1024D | 460/3/60 | 2 | 6.4 | 55.1 | 2 | 0.33 | 0.85 | 1 | 2.4 | 5.4 | - | - | 21.5 | 25 |
| | | | | | | | | | | | 4.3 | - | 25.8 | 30 |
| | | | | | | | | | | | - | 1.2 (1.0) | 22.7 | 25 |
| | | | | | | | | | | | 4.3 | 1.2 (1.0) | 27.0 | 30 |
| DHG1024L | 460/3/60 | 2 | 6.4 | 55.1 | 2 | 0.33 | 0.85 | 1 | 3.5 | 7.2 | - | - | 23.3 | 30 |
| | | | | | | | | | | | 4.3 | - | 27.6 | 35 |
| | | | | | | | | | | | - | 1.2 (1.0) | 24.5 | 30 |
| | | | | | | | | | | | 4.3 | 1.2 (1.0) | 28.8 | 35 |

# Electrical Data

| Model Number | Electrical Rating | Compressor | | | Outdoor Fan Motor | | | Indoor Fan Motor | | | Optional Powered Convenience Outlet | Optional Power Exhaust | Power Supply | |
|---|---|---|---|---|---|---|---|---|---|---|---|---|---|---|
| | | QTY | RLA | LRA | QTY | HP | FLA | QTY | HP | FLA | FLA | FLA | MCA | MOP |
| DHG1024W | 460/3/60 | 2 | 6.4 | 55.1 | 2 | 0.33 | 0.85 | 1 | 3.5 | 7.2 | - | - | 23.3 | 30 |
| | | | | | | | | | | | 4.3 | - | 27.6 | 35 |
| | | | | | | | | | | | - | 1.2 (1.0) | 24.5 | 30 |
| | | | | | | | | | | | 4.3 | 1.2 (1.0) | 28.8 | 35 |
| DHG1027D | 575/3/60 | 2 | 5.1 | 41.0 | 2 | 0.33 | 0.67 | 1 | 2.4 | 4.0 | - | - | 16.9 | 20 |
| | | | | | | | | | | | 3.5 | - | 20.4 | 25 |
| | | | | | | | | | | | - | 1.3 | 18.2 | 20 |
| | | | | | | | | | | | 3.5 | 1.3 | 21.7 | 25 |
| DHG1027L | 575/3/60 | 2 | 5.1 | 41.0 | 2 | 0.33 | 0.67 | 1 | 3.5 | 5.0 | - | - | 17.9 | 20 |
| | | | | | | | | | | | 3.5 | - | 21.4 | 25 |
| | | | | | | | | | | | - | 1.3 | 19.2 | 20 |
| | | | | | | | | | | | 3.5 | 1.3 | 22.7 | 25 |
| DHG1027W | 575/3/60 | 2 | 5.1 | 41.0 | 2 | 0.33 | 0.67 | 1 | 3.5 | 5.0 | - | - | 17.9 | 20 |
| | | | | | | | | | | | 3.5 | - | 21.4 | 25 |
| | | | | | | | | | | | - | 1.3 | 19.2 | 20 |
| | | | | | | | | | | | 3.5 | 1.3 | 22.7 | 25 |
| DHG1203D | 208/230/3/60 | 2 | 15.4 | 156 | 2 | 0.33 | 2.0 | 1 | 2.4 | 8.0 | - | - | 46.6/46.6 | 60/60 |
| | | | | | | | | | | | 9.6/8.7 | - | 56.2/55.3 | 70/70 |
| | | | | | | | | | | | - | 3.3/3.0 (2.4) | 49.9/49.6 | 60/60 |
| | | | | | | | | | | | 9.6/8.7 | 3.3/3.0 (2.4) | 59.5/58.3 | 70/70 |
| DHG1203L | 208/230/3/60 | 2 | 15.4 | 156 | 2 | 0.33 | 2.0 | 1 | 3.5 | 10.9 | - | - | 49.5/49.5 | 60/60 |
| | | | | | | | | | | | 9.6/8.7 | - | 59.1/58.2 | 70/70 |
| | | | | | | | | | | | - | 3.3/3.0 (2.4) | 52.8/52.5 | 60/60 |
| | | | | | | | | | | | 9.6/8.7 | 3.3/3.0 (2.4) | 62.4/61.2 | 70/70 |
| DHG1203W | 208/230/3/60 | 2 | 15.4 | 156 | 2 | 0.33 | 2.0 | 1 | 5.0 | 14.5 | - | - | 53.1/53.1 | 60/60 |
| | | | | | | | | | | | 9.6/8.7 | - | 62.7/61.8 | 70/70 |
| | | | | | | | | | | | - | 3.3/3.0 (2.4) | 56.4/56.1 | 70/70 |
| | | | | | | | | | | | 9.6/8.7 | 3.3/3.0 (2.4) | 66.0/64.8 | 80/80 |
| DHG1204D | 460/3/60 | 2 | 7.7 | 69.0 | 2 | 0.33 | 0.85 | 1 | 2.4 | 5.4 | - | - | 24.4 | 30 |
| | | | | | | | | | | | 4.3 | - | 28.7 | 35 |
| | | | | | | | | | | | - | 1.2 (1.0) | 25.6 | 30 |
| | | | | | | | | | | | 4.3 | 1.2 (1.0) | 29.9 | 35 |
| DHG1204L | 460/3/60 | 2 | 7.7 | 69.0 | 2 | 0.33 | 0.85 | 1 | 3.5 | 7.2 | - | - | 26.2 | 30 |
| | | | | | | | | | | | 4.3 | - | 30.5 | 35 |
| | | | | | | | | | | | - | 1.2 (1.0) | 27.4 | 35 |
| | | | | | | | | | | | 4.3 | 1.2 (1.0) | 31.7 | 35 |
| DHG1204W | 460/3/60 | 2 | 7.7 | 69.0 | 2 | 0.33 | 0.85 | 1 | 5.0 | 10.6 | - | - | 29.6 | 40 |
| | | | | | | | | | | | 4.3 | - | 33.9 | 45 |
| | | | | | | | | | | | - | 1.2 (1.0) | 30.8 | 40 |
| | | | | | | | | | | | 4.3 | 1.2 (1.0) | 35.1 | 45 |
| DHG1207D | 575/3/60 | 2 | 6.4 | 47.8 | 2 | 0.33 | 0.67 | 1 | 2.4 | 4.0 | - | - | 19.7 | 25 |
| | | | | | | | | | | | 3.5 | - | 23.2 | 25 |
| | | | | | | | | | | | - | 1.3 | 21.0 | 25 |
| | | | | | | | | | | | 3.5 | 1.3 | 24.5 | 30 |
| DHG1207L | 575/3/60 | 2 | 6.4 | 47.8 | 2 | 0.33 | 0.67 | 1 | 3.5 | 5.0 | - | - | 20.7 | 25 |
| | | | | | | | | | | | 3.5 | - | 24.2 | 30 |
| | | | | | | | | | | | - | 1.3 | 22.0 | 25 |
| | | | | | | | | | | | 3.5 | 1.3 | 25.5 | 30 |
| DHG1207W | 575/3/60 | 2 | 6.4 | 47.8 | 2 | 0.33 | 0.67 | 1 | 5.0 | 7.2 | - | - | 22.9 | 30 |
| | | | | | | | | | | | 3.5 | - | 26.4 | 30 |
| | | | | | | | | | | | - | 1.3 | 24.2 | 30 |
| | | | | | | | | | | | 3.5 | 1.3 | 27.7 | 35 |
| DHG1503D | 208/230/3/60 | 2 | 19.2 | 157 | 2 | 0.33 | 3.5 | 1 | 3.5 | 10.9 | - | - | 61.1/61.1 | 80/80 |
| | | | | | | | | | | | 9.6/8.7 | - | 70.7/69.8 | 80/80 |
| | | | | | | | | | | | - | 3.3/3.0 (2.4) | 64.4/64.1 | 80/80 |
| | | | | | | | | | | | 9.6/8.7 | 3.3/3.0 (2.4) | 74.0/72.8 | 90/90 |

# Electrical Data

| Model Number | Electrical Rating | Compressor | | | Outdoor Fan Motor | | | Indoor Fan Motor | | | Optional Powered Convenience Outlet | Optional Power Exhaust | Power Supply | |
|---|---|---|---|---|---|---|---|---|---|---|---|---|---|---|
| | | QTY | RLA | LRA | QTY | HP | FLA | QTY | HP | FLA | FLA | FLA | MCA | MOP |
| DHG1503L | 208/230/3/60 | 2 | 19.2 | 157 | 2 | 0.33 | 3.5 | 1 | 3.5 | 10.9 | - | - | 61.1/61.1 | 80/80 |
| | | | | | | | | | | | 9.6/8.7 | - | 70.7/69.8 | 80/80 |
| | | | | | | | | | | | - | 3.3/3.0 (2.4) | 64.4/64.1 | 80/80 |
| | | | | | | | | | | | 9.6/8.7 | 3.3/3.0 (2.4) | 74.0/72.8 | 90/90 |
| DHG1503W | 208/230/3/60 | 2 | 19.2 | 157 | 2 | 0.33 | 3.5 | 1 | 5.0 | 14.5 | - | - | 64.7/64.7 | 80/80 |
| | | | | | | | | | | | 9.6/8.7 | - | 74.3/73.4 | 90/90 |
| | | | | | | | | | | | - | 3.3/3.0 (2.4) | 68.0/67.7 | 80/80 |
| | | | | | | | | | | | 9.6/8.7 | 3.3/3.0 (2.4) | 77.6/76.4 | 90/90 |
| DHG1504D | 460/3/60 | 2 | 9.0 | 74.8 | 2 | 0.33 | 1.6 | 1 | 3.5 | 7.2 | - | - | 30.6 | 35 |
| | | | | | | | | | | | 4.3 | - | 34.9 | 40 |
| | | | | | | | | | | | - | 1.2 (1.0) | 31.8 | 40 |
| | | | | | | | | | | | 4.3 | 1.2 (1.0) | 36.1 | 40 |
| DHG1504L | 460/3/60 | 2 | 9.0 | 74.8 | 2 | 0.33 | 1.6 | 1 | 3.5 | 7.2 | - | - | 30.6 | 35 |
| | | | | | | | | | | | 4.3 | - | 34.9 | 40 |
| | | | | | | | | | | | - | 1.2 (1.0) | 31.8 | 40 |
| | | | | | | | | | | | 4.3 | 1.2 (1.0) | 36.1 | 40 |
| DHG1504W | 460/3/60 | 2 | 9.0 | 74.8 | 2 | 0.33 | 1.6 | 1 | 5.0 | 10.6 | - | - | 34.0 | 40 |
| | | | | | | | | | | | 4.3 | - | 38.3 | 45 |
| | | | | | | | | | | | - | 1.2 (1.0) | 35.2 | 45 |
| | | | | | | | | | | | 4.3 | 1.2 (1.0) | 39.5 | 50 |
| DHG1507D | 575/3/60 | 2 | 7.0 | 53.9 | 2 | 0.33 | 1.54 | 1 | 3.5 | 5.0 | - | - | 23.9 | 30 |
| | | | | | | | | | | | 3.5 | - | 27.4 | 30 |
| | | | | | | | | | | | - | 1.3 | 25.2 | 30 |
| | | | | | | | | | | | 3.5 | 1.3 | 28.7 | 35 |
| DHG1507L | 575/3/60 | 2 | 7.0 | 53.9 | 2 | 0.33 | 1.54 | 1 | 3.5 | 5.0 | - | - | 23.9 | 30 |
| | | | | | | | | | | | 3.5 | - | 27.4 | 30 |
| | | | | | | | | | | | - | 1.3 | 25.2 | 30 |
| | | | | | | | | | | | 3.5 | 1.3 | 28.7 | 35 |
| DHG1507W | 575/3/60 | 2 | 7.0 | 53.9 | 2 | 0.33 | 1.54 | 1 | 5.0 | 7.2 | - | - | 26.1 | 30 |
| | | | | | | | | | | | 3.5 | - | 29.6 | 35 |
| | | | | | | | | | | | - | 1.3 | 27.4 | 30 |
| | | | | | | | | | | | 3.5 | 1.3 | 30.9 | 35 |

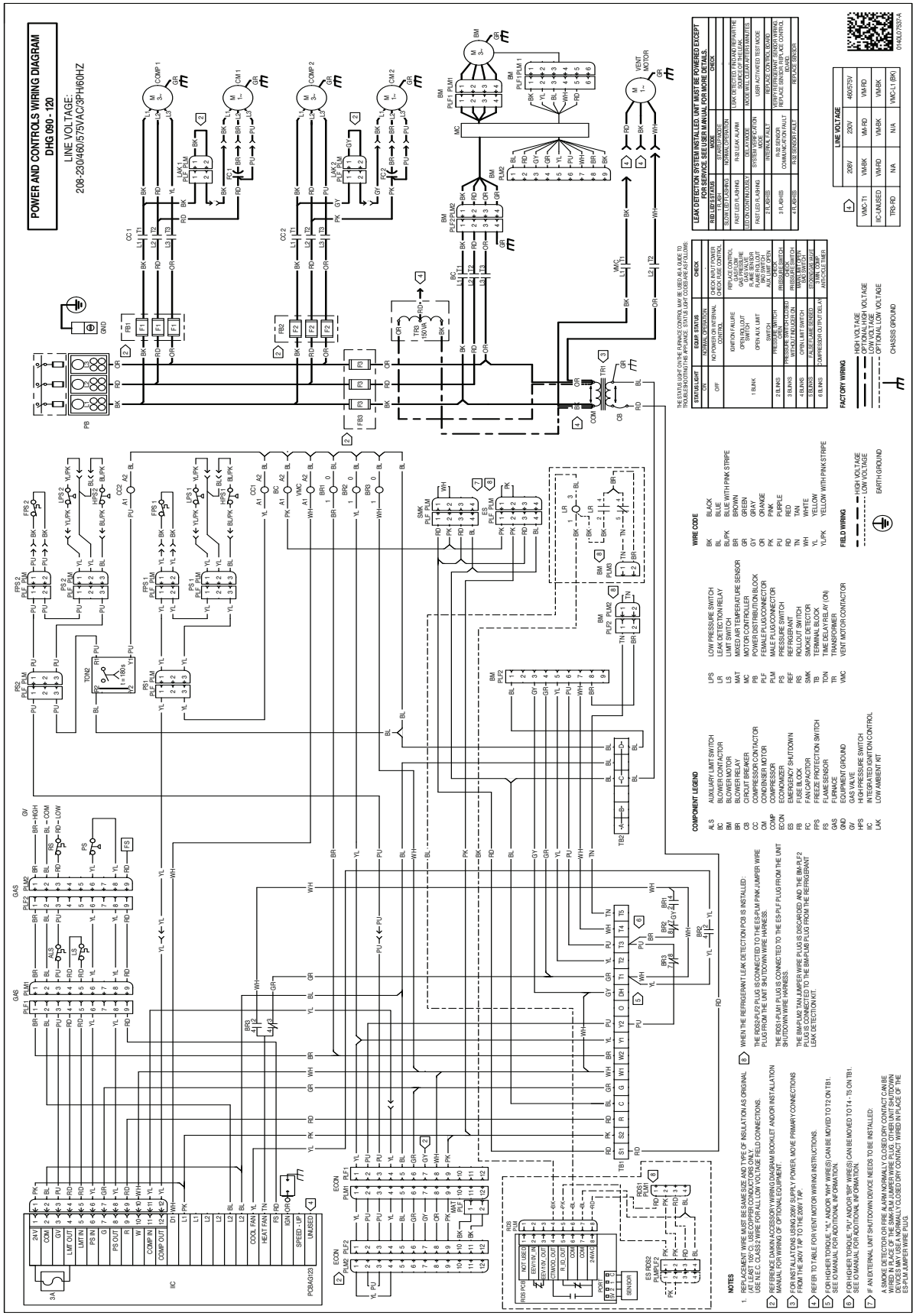


Wiring is subject to change. Always refer to the wiring diagram on the unit for the most up-to-date wiring.

**WARNING**

*High Voltage:* Disconnect all power before servicing or installing this unit. Multiple power sources may be present. Failure to do so may cause property damage, personal injury, or death.

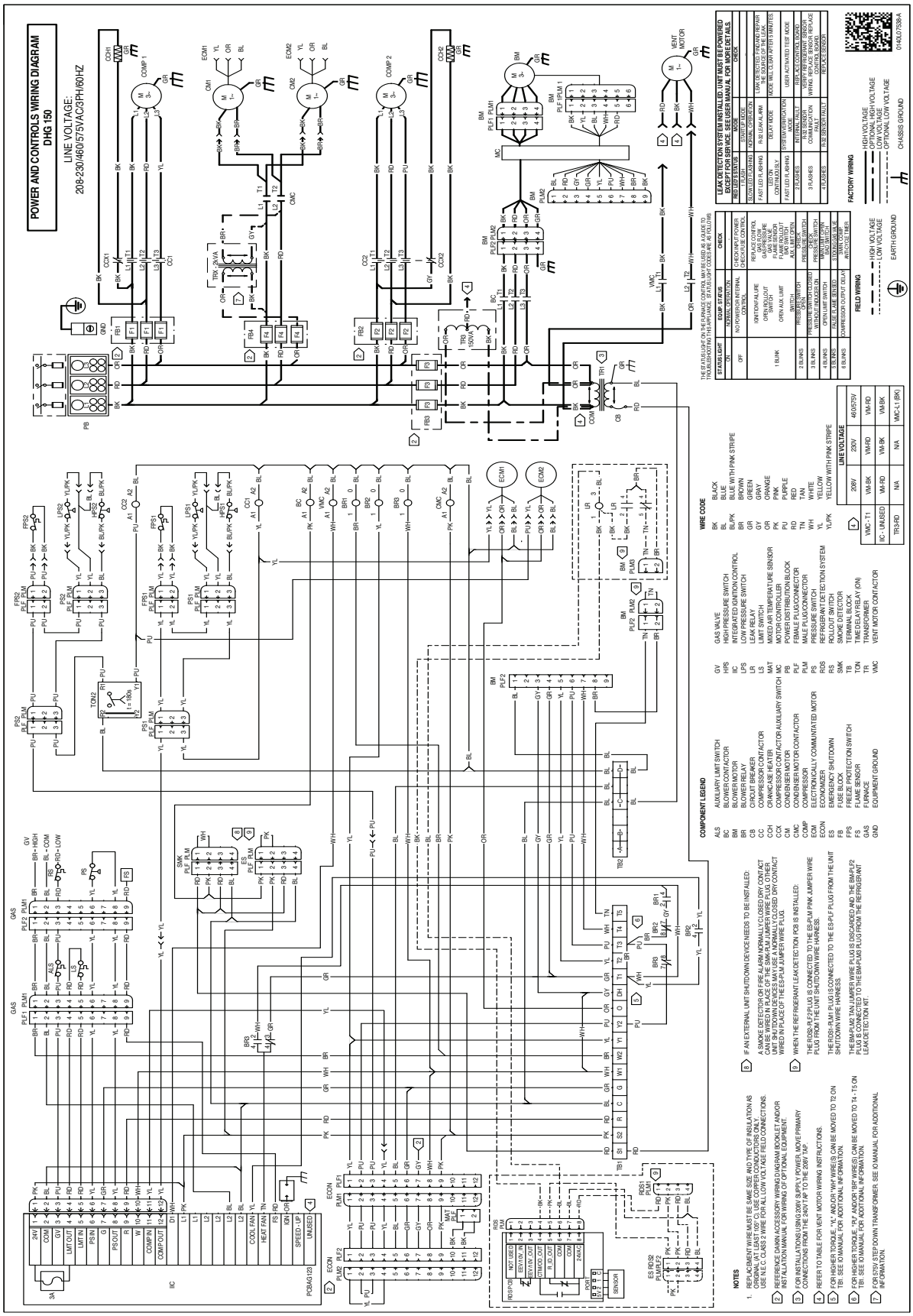


**WARNING**

*High Voltage:* Disconnect all power before servicing or installing this unit. Multiple power sources may be present. Failure to do so may cause property damage, personal injury, or death.

Wiring is subject to change. Always refer to the wiring diagram on the unit for the most up-to-date wiring.

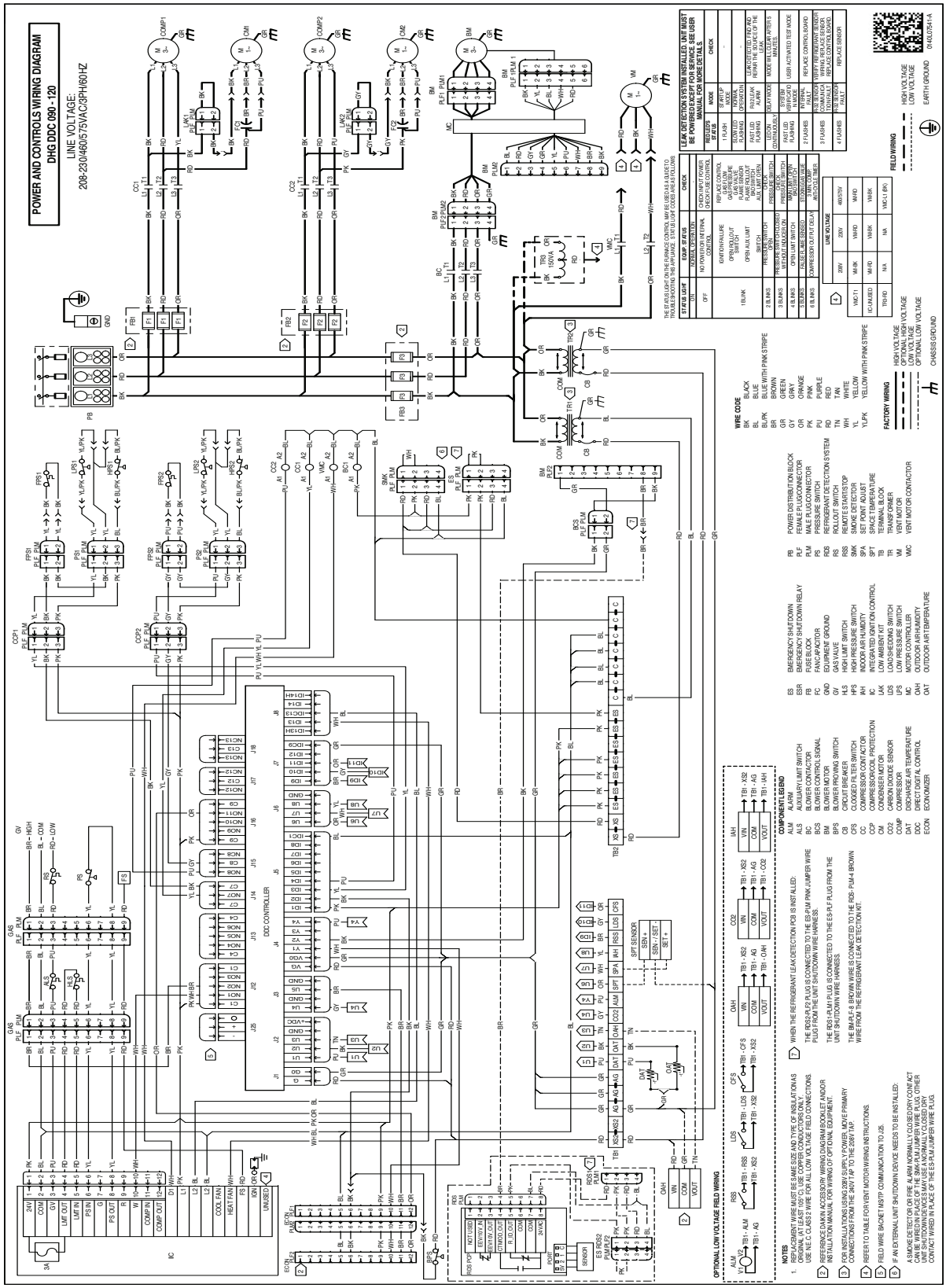


Wiring is subject to change. Always refer to the wiring diagram on the unit for the most up-to-date wiring.

**WARNING**

*High Voltage:* Disconnect all power before servicing or installing this unit. Multiple power sources may be present. Failure to do so may cause property damage, personal injury, or death.

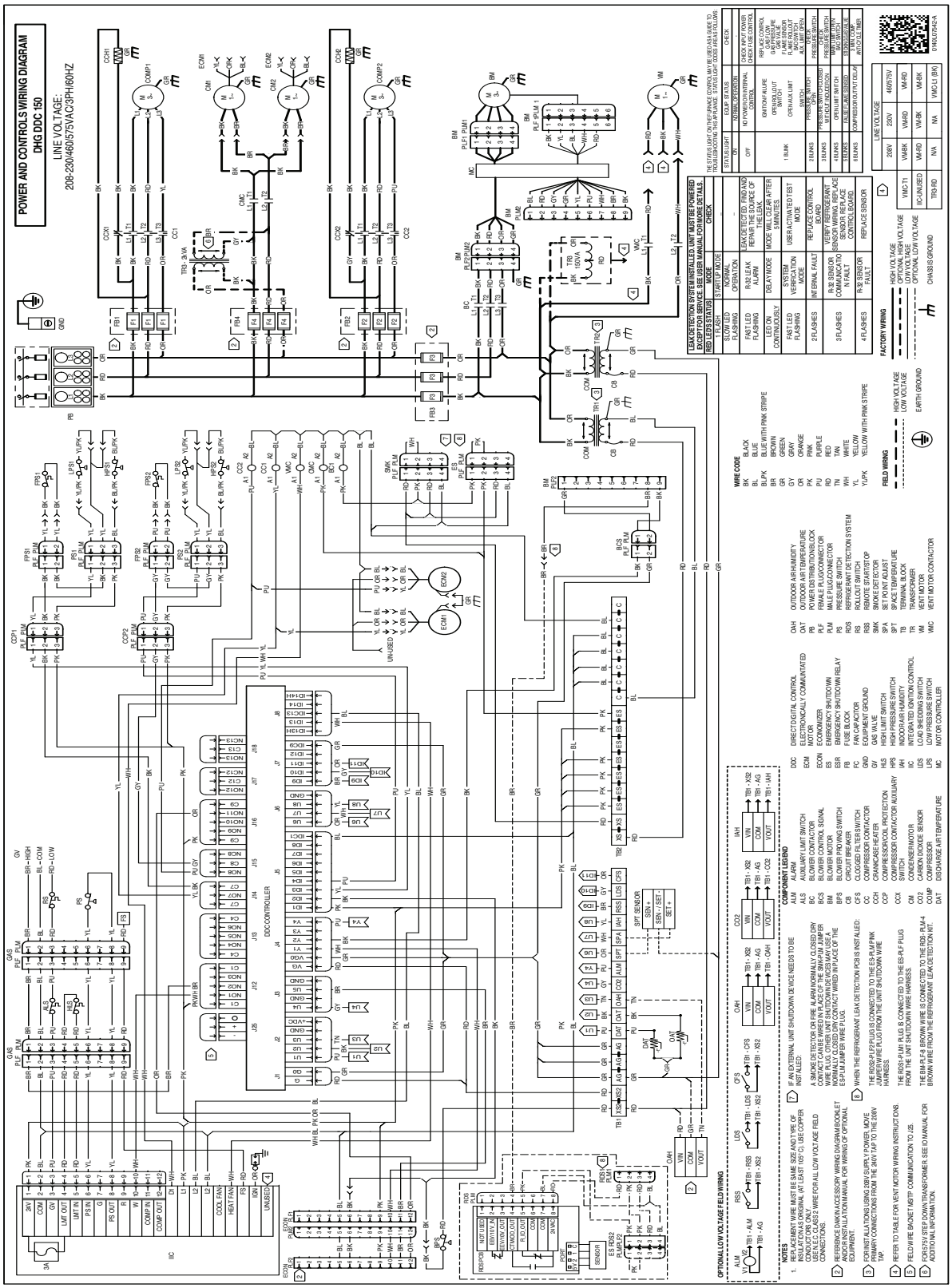


*High Voltage:* Disconnect all power before servicing or installing this unit. Multiple power sources may be present. Failure to do so may cause property damage, personal injury, or death.

Wiring is subject to change. Always refer to the wiring diagram on the unit for the most up-to-date wiring.

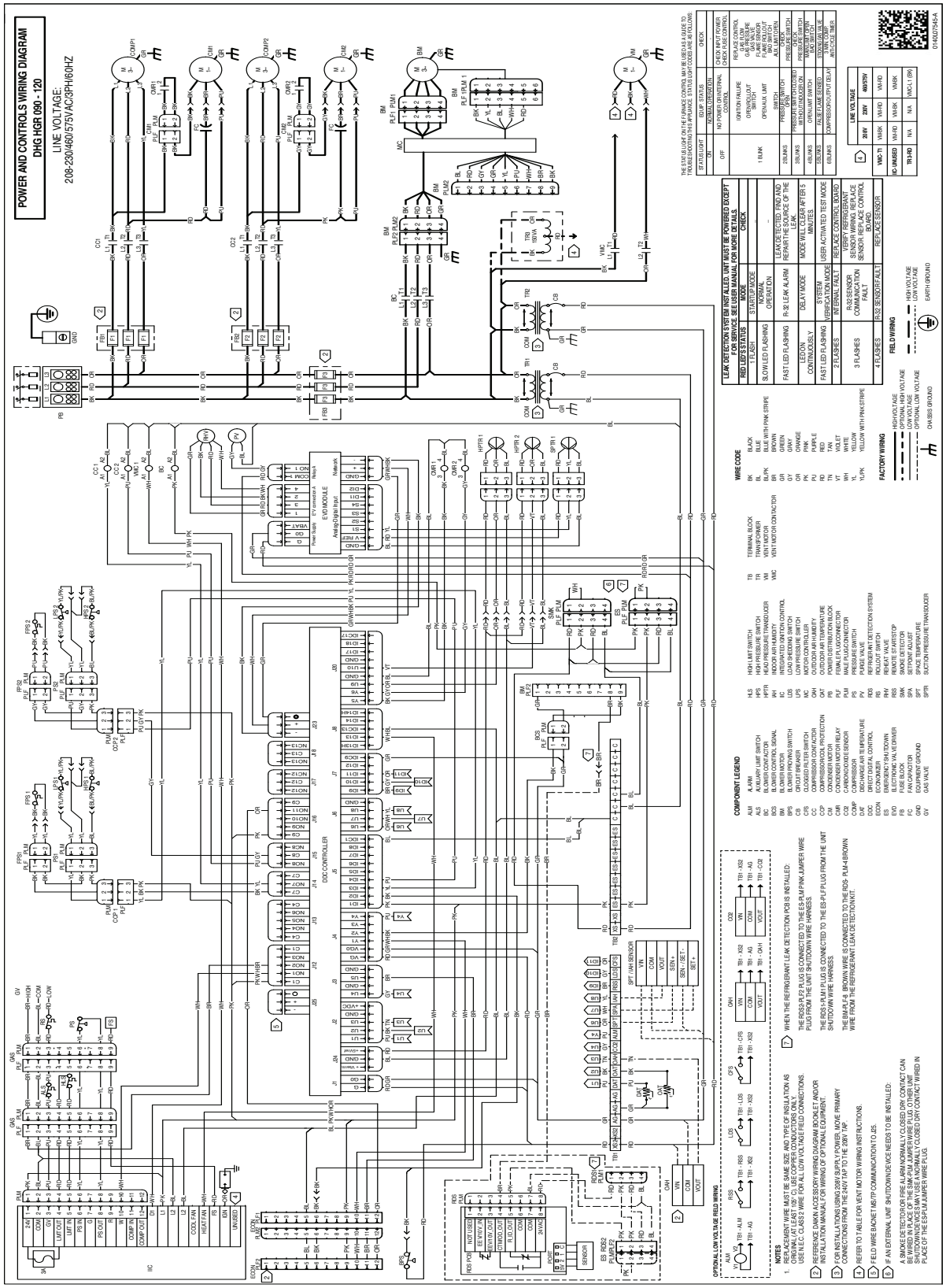


**WARNING**

*High Voltage:* Disconnect all power before servicing or installing this unit. Multiple power sources may be present. Failure to do so may cause property damage, personal injury, or death.

Wiring is subject to change. Always refer to the wiring diagram on the unit for the most up-to-date wiring.

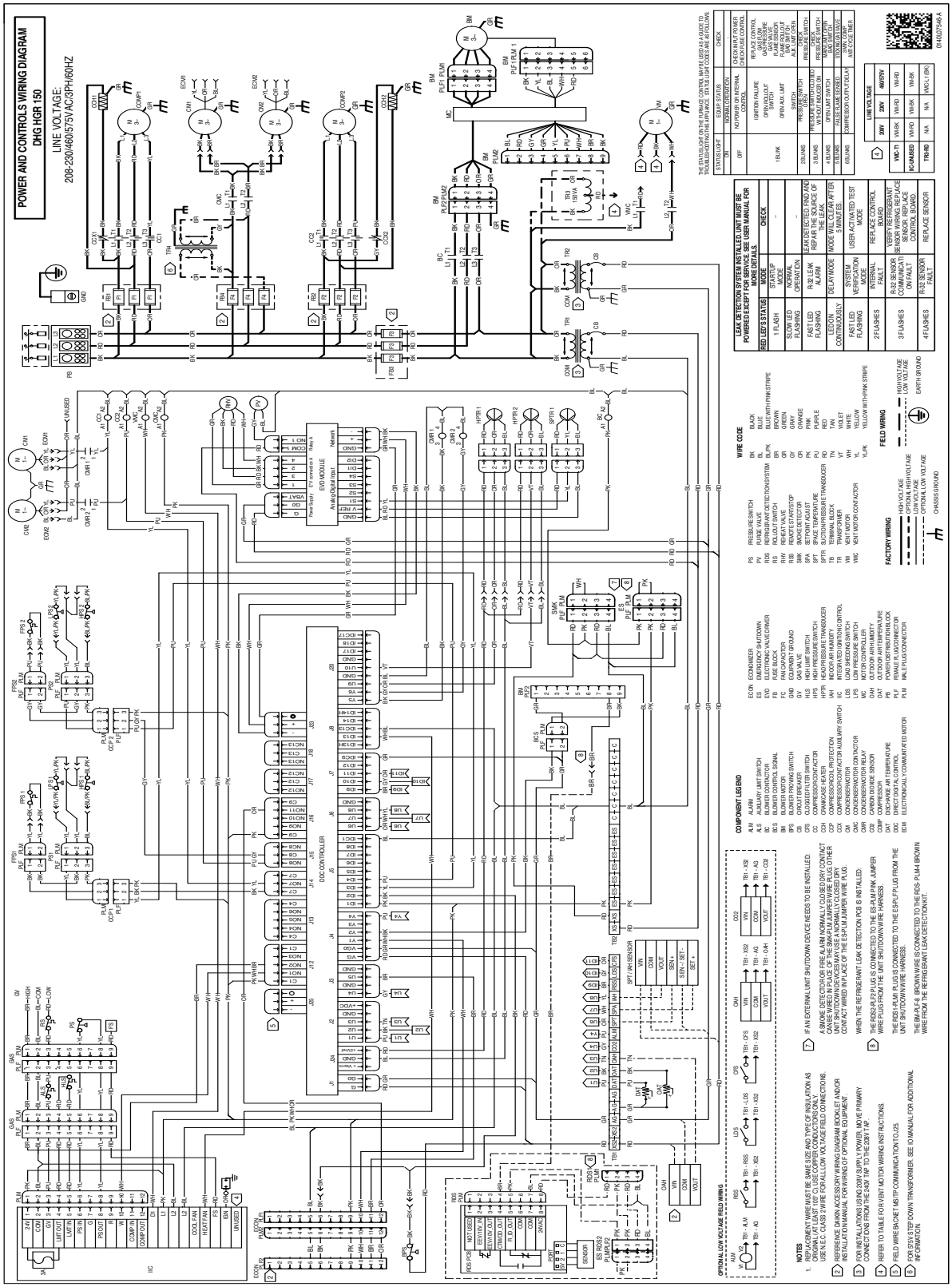


**WARNING**

*High Voltage*: Disconnect all power before servicing or installing this unit. Multiple power sources may be present. Failure to do so may cause property damage, personal injury, or death.

Wiring is subject to change. Always refer to the wiring diagram on the unit for the most up-to-date wiring.

# Electrical Connections

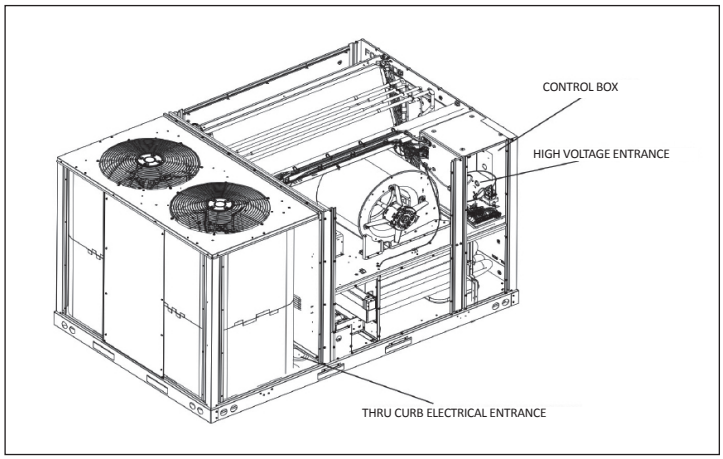


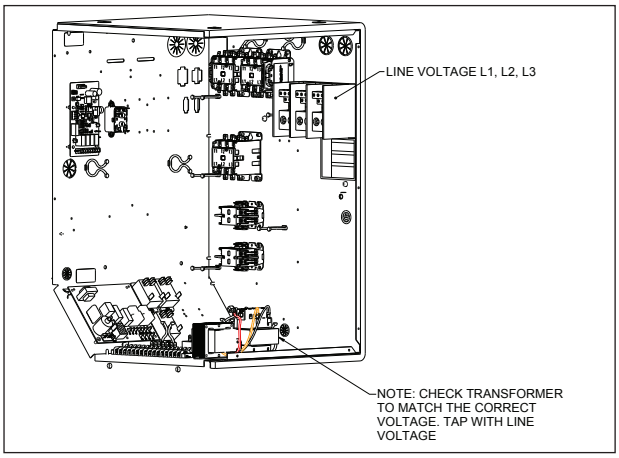


| UNIT | DIM "A" |
|---|---|
| DHG090 | 23 3/5 |
| DHG102 | 23 3/5 |
| DHG120 | 23 3/5 |
| DHG150 | 23 9/10 |

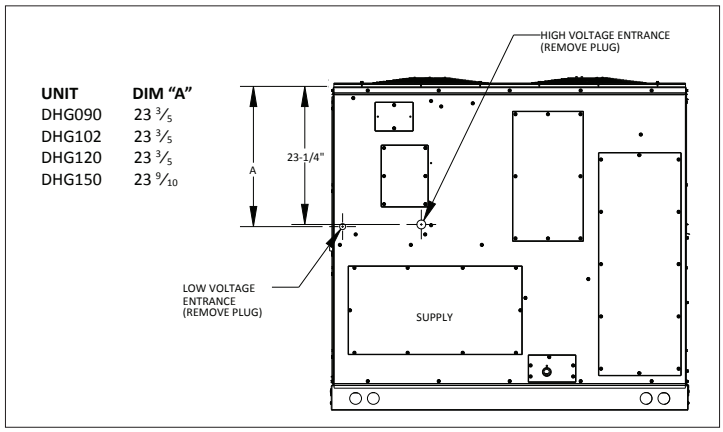


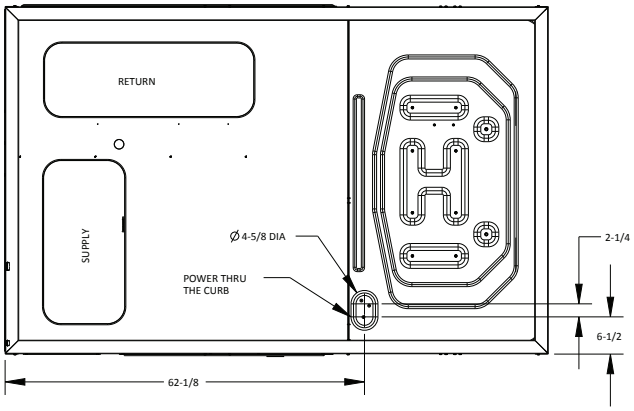


# Unit Clearances

## Service Clearance

Allow for recommended service clearances as shown in figure to the right. In situations that have multiple units, a 36" minimum clearance is required between the condenser coils. A clearance of 48" is recommended on all sides of the unit to allow service access and to ensure proper ventilation and condenser airflow. The top of the unit should be unobstructed. Provide a roof walkway along the sides of the unit for service and access to controls and components. Contact your Daikin sales representative for service requirements less than those recommended.

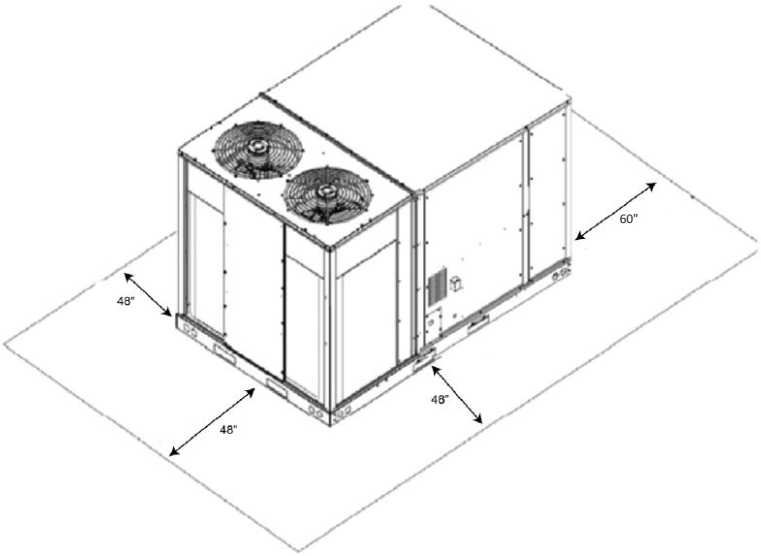

## Unit Location

The structural engineer must verify that the roof has adequate support and ability to minimize deflection. Take extreme caution when using on a wooden roof structure. Unit condenser coils should be in a location that avoids any heated exhaust air.

Allow sufficient space around the unit for maintenance/service clearance. Consult your Daikin sales representative if available clearances do not meet minimum recommendations.

Where code considerations, such as the NEC, require extended clearances, these take precedence.

Provisions for forks have been included in the unit base frame. No other fork locations are approved.

» Unit must be lifted by the four lifting holes located at the base frame corners.

» Lifting cables should be attached to the unit with shackles.

» The distance between the crane hook and the top of the unit must not be less than 60".

» Two spreader bars must span over the unit to prevent damage to the cabinet by the lift cables. Spreader bars must be of sufficient length so that cables do not come in contact with the unit during transport. Remove wood struts mounted beneath unit base frame before setting unit on roof curb. These struts are intended to protect unit base frame from fork lift damage. To remove the struts, extract the sheet metal retainers and pull the struts through the base of the unit. Refer to rigging label on the unit.

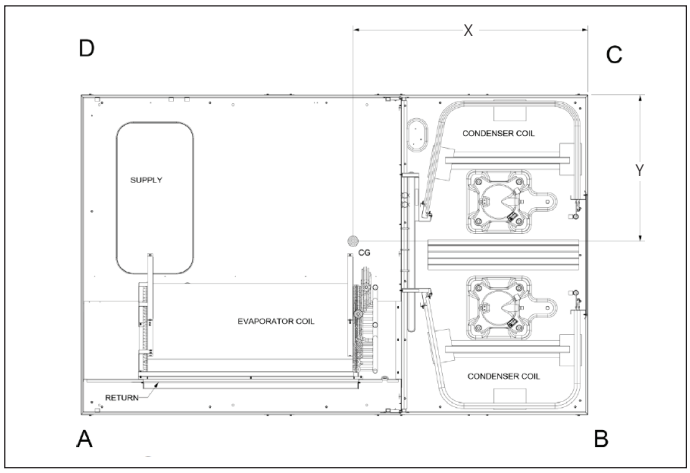


**Corner & Center-of-Gravity Locations**

**Important:** If using bottom discharge with roof curb, ductwork should be attached to the curb prior to installing the unit. Refer to the Roof Curb Installation Instructions for proper curb installation. Curbing must be installed in compliance with the National Roofing Contractors Association Manual. Lower unit carefully onto roof mounting curb. While rigging the unit, the center of gravity will cause the condenser end to be lower than the supply air end. Bring condenser end of unit into alignment with the curb. With condenser end of the unit resting on curb member and using curb as a fulcrum, lower opposite end of the unit until entire unit is seated on the curb. When a rectangular cantilever curb is used, take care to center the unit. Check for proper alignment and orientation of supply and return openings with duct.

## Roof Curb Installation

The roof curb is field-assembled and must be installed level (within 1/16" per foot side to side). A sub-base must be constructed by the contractor in applications involving pitched roofs. Gaskets are furnished and must be installed between the unit and curb. For proper installation, follow NRCA guidelines. In applications requiring post and rail installation, an I-beam securely mounted on multiple posts should support the unit on each side. In addition, the insulation on the underside of the unit should be protected from the elements. Applications in geographic areas subjected to seismic or hurricane conditions must meet code requirements for fastening the unit to the curb and the curb to the building structure. For further and more detailed information please refer to our Daikin Light Commercial Packaged unit IOD.

## Weights

| Model | Shipping Weight (lbs) | Operating Weight (lbs) | Corner Weights (lbs) | | | | Length | Width |
|---|---|---|---|---|---|---|---|---|
| | | | A | B | C | D | X (in) | Y (in) |
| DHG0903D | 1319 | 1253 | 453 | 194 | 121 | 485 | 46½ | 30½ |
| DHG1023D | 1327 | 1268 | 399 | 233 | 206 | 430 | 46⅜ | 31 1/10 |
| DHG1203D | 1353 | 1296 | 328 | 313 | 302 | 353 | 45⅛ | 31 1/7 |
| DHG1503D | 1368 | 1310 | 304 | 366 | 334 | 306 | 46⅜ | 29⅝ |

For details on accessories refer to document **PM-LC-ACCESSORIES**

# Notes

Our continuing commitment to quality products may mean a change in specifications without notice.
©2025 DAIKIN COMFORT TECHNOLGIES MANUFACTURING, L.P. • Houston, Texas • Printed in the USA.