GSZ14

Cooling Capacity: 18,000 to 60,000 BTU/h

Heating Capacity: 18,000 to 60,000 BTU/h

Energy-Efficient Split System Heat Pump Up to 15 SEER & 9.0 HSPF 1½ to 5 Tons

Contents

Nomenclature 2
Product Specifications 3
Expanded Cooling Data 5
Expanded Heating Data 29
Performance Data 32
AHRI Ratings 34
Dimensions 54
Wiring Diagram 55
Accessories 56

Standard Features

- High-efficiency scroll compressor
- SmartShift® technology to ensure quiet reliable defrost
- Factory-installed bi-flow liquid-line filter drier
- Factory-installed suction-line accumulator
- Factory-installed compressor crankcase heater
- Factory-installed high-capacity muffler
- High- and low-pressure switches
- Service valves with sweat connections and easy access to gauge ports
- Copper tube/enhanced aluminum fin coil
- Fully charged for 15' of tubing length
- Contactor with lug connection
- Ground lug connection
- AHRI Certified; ETL Listed

Cabinet Features

- Goodman® brand sound control top design
- Steel louver coil guard
- Heavy-gauge galvanized-steel cabinet
- Attractive Architectural Gray powder-paint finish with 500-hour salt-spray approval
- Top and side maintenance access
- Service ports and controls are accessible while unit is operating
- When properly anchored, meets the 2010 Florida Building Code unit integrity requirements for hurricane-type winds (Anchor bracket kits available.)

10 YEAR PARTS LIMITED WARRANTY

Intertek

AHRI CERTIFIED® www.ahridirectory.org

COMPANY WITH QUALITY SYSTEM CERTIFIED BY DNV GL = ISO 9001 =

COMPANY WITH ENVIRONMENTAL SYSTEM CERTIFIED BY DNV GL = ISO 14001 =

* Complete warranty details available from your local dealer or at www.amana-hac.com. To receive the 10-Year Parts Limited Warranty, online registration must be completed within 60 days of installation. Online registration is not required in California or Quebec.

Amana® is a trademark of Maytag Corporation or its related companies and used under license to Goodman Company, L.P., Houston, Texas.

G	S	Z	14	036	1	AA
1	2	3	4,5	6,7,8	9	10,11

Brand

G Amana® Distinctions® Brand

Product Category

S Split System

Unit Type

X Condenser R-410A

Z Heat Pump R-410A

Efficiency

13 13 SEER 16 16 SEER

14 14 SEER 18 18 SEER

Engineering *

Major & Minor revisions

* Not used for inventory control.

Electrical

1 - 208/230 V, 1 Phase, 60 Hz

Nominal Capacity

018 - 1½ tons 042 3½ Tons

024 - 2 tons 048 4 Tons

030 - 2½ tons 060 5 Tons

036 - 3 tons

	GSZ14 0181K*	GSZ14 0191A*	GSZ14 0241K*	GSZ14 0251A*	GSZ14 0301K*	GSZ14 0311A*
Nominal Capacities						
Cooling (BTU/h)	18,000	17,400	24,000	23,200	30,000	28,000
Heating (BTU/h)	18,000	18,000	24,000	23,200	30,000	31,000
Decibels	72	72	72	72	74	75
Compressor						
RLA	9.0	9.0	10.9	10.9	13.5	13.5
LRA	47.5	47.5	62.9	62.9	72.5	72.5
Type	Scroll	Scroll	Scroll	Scroll	Scroll	Scroll
Condenser Fan Motor						
Horsepower	1/6	1/6	1/6	1/6	1/6	1/6
FLA	0.95	1.1	0.95	1.1	0.95	1.10
Refrigeration System						
Refrigerant Line Size[1]						
Liquid Line Size (“O.D.)	⅜"	⅜"	⅜"	⅜"	⅜"	⅜"
Suction Line Size (“O.D.)	¾"	¾"	¾"	¾"	¾"	¾"
Refrigerant Connection Size						
Liquid Valve Size (“O.D.)	⅜"	⅜"	⅜"	⅜"	⅜"	⅜"
Suction Valve Size (“O.D.)	¾"	¾"	¾"	¾"	¾"	¾”
Standard Line Set Length (max. feet)	80	80	80	80	80	80
Long Line Set Length (max. feet) [2]						
Equivalent Length	250	250	250	250	250	250
Linear Length	200	200	200	200	200	200
Vertical Length (outdoor below indoor)	80	80	80	80	80	80
Vertical Length (outdoor above indoor)	80	200	80	200	80	200
Valve Connection Type	Sweat	Sweat	Sweat	Sweat	Sweat	Sweat
Refrigerant Charge (oz.)	92	92	92	92	95	160
Electrical Data						
Volts/Phase (60 Hz)	208-230/1	208-230/1	208-230/1	208-230/1	208-230/1	208-230/1
Minimum Circuit Ampacity [3]	12.2	12.4	14.6	14.7	17.8	17.9
Max. Overcurrent Protection [4]	20	20	25	25	30	30
Min / Max Volts	197 / 253	197 / 253	197 / 253	197 / 253	197 / 253	197/253
Electrical Conduit Size	½" or ¾"	½" or ¾"	½" or ¾"	½" or ¾"	½" or ¾"	1/2" or 3/4"
Unit Weights						
Equipment Weight (lbs.)	143	143	143	143	171	186
Ship Weight (lbs)	154	154	154	154	182	206

1 Tested and rated in accordance with ARI Standard 210/240
2 Reference TP-107* for additional application requirements
3 Wire size should be determined in accordance with National Electrical Codes; extensive wire runs will require larger wire sizes
4 Must use time-delay fuses or HACR-type circuit breakers of the same size as noted.

Notes

- Always check the S&R plate for electrical data on the unit being installed.
- Installer will need to supply ⅞” to 1⅛” adapters for suction line connections.
- Unit is charged with refrigerant for 15’ of ⅜” liquid line. System charge must be adjusted per Installation Instructions Final Charge Procedure.
- Installation of these units may require the specified TXV Kit to be installed on the indoor coil. THE SPECIFIED TXV IS DETERMINED BY THE OUTDOOR UNIT NOT THE INDOOR COIL.

	GSZ14 0361K*	GSZ14 0371A*	GSZ14 0421K*	GSZ14 0481K*	GSZ14 0491K*	GSZ14 0601K*
Nominal Capacities						
Cooling (BTU/h)	36,000	33,000	42,000	48,000	48,000	60,000
Heating (BTU/h)	36,000	34,000	42,000	48,000	48,000	60,000
Decibels	74	73	75	75	76	76
Compressor						
RLA	15.4	14.1	16.7	18.5	19.9	26.4
LRA	83.9	72.2	109.0	124.0	109.0	134.0
Type	Scroll	Scroll	Scroll	Scroll	Scroll	Scroll
Condenser Fan Motor						
Horsepower	1/6	1/4	1/6	1/4	1/6	1/4
FLA	0.95	1.30	1.1	1.30	1.1	1.30
Refrigeration System						
Refrigerant Line Size[1]						
Liquid Line Size (“O.D.)	⅜"	⅜"	⅜"	⅜"	⅜"	⅜"
Suction Line Size (“O.D.)	⅞"	⅞"	1⅛"	1⅛"	1⅛"	1⅛"
Refrigerant Connection Size						
Liquid Valve Size (“O.D.)	⅜"	⅜"	⅜"	⅜"	⅜"	⅜"
Suction Valve Size (“O.D.)	¾"	⅞"	⅞"	⅞”	⅞"	⅞"
Standard Line Set Length (max. feet)	80	80	80	80	80	80
Long Line Set Length (max. feet) [2]						
Equivalent Length	250	250	250	250	250	250
Linear Length	200	200	200	200	200	200
Vertical Length (outdoor below indoor)	80	80	80	80	80	80
Vertical Length (outdoor above indoor)	80	200	80	80	80	80
Valve Connection Type	Sweat	Sweat	Sweat	Sweat	Sweat	Sweat
Refrigerant Charge	112	175	140	133	187	205
Electrical Data						
Volts/Phase (60 Hz)	208-230/1	208-230/1	208-230/1	208-230/1	208-230/1	208-230/1
Minimum Circuit Ampacity [3]	20.2	18.9	22.0	24.4	26.0	34.3
Max. Overcurrent Protection [4]	35	30	35	40	45	60
Min / Max Volts	197 / 253	197/253	197 / 253	197 / 253	197 / 253	197 / 253
Electrical Conduit Size	½" or ¾"	1/2" or 3/4"	½" or ¾"	½" or ¾"	½" or ¾"	½" or ¾"
Unit Weights						
Equipment Weight (lbs.)	173	220	191	226	273	277
Ship Weight (lbs)	184	240	207	237	288	292

1 Tested and rated in accordance with ARI Standard 210/240
2 Reference TP-107* for additional application requirements
3 Wire size should be determined in accordance with National Electrical Codes; extensive wire runs will require larger wire sizes
4 Must use time-delay fuses or HACR-type circuit breakers of the same size as noted.

Notes

- Always check the S&R plate for electrical data on the unit being installed.
- Installer will need to supply ⅞” to 1⅛” adapters for suction line connections.
- Unit is charged with refrigerant for 15’ of ⅜” liquid line. System charge must be adjusted per Installation Instructions Final Charge Procedure.
- Installation of these units requires the specified TXV Kit to be installed on the indoor coil. THE SPECIFIED TXV IS DETERMINED BY THE OUTDOOR UNIT NOT THE INDOOR COIL.

Expanded Cooling Data — GSZ140181K* + ARUF25B14** + TXV

			Outdoor Ambient Temperature																							
			65ºF				75ºF				85ºF				95ºF				105ºF				115ºF			
			Entering Indoor Wet Bulb Temperature																							
IDB	Airflow		59	63	67	71	59	63	67	71	59	63	67	71	59	63	67	71	59	63	67	71	59	63	67	71
70	525	MBh	17.9	18.1	18.7	-	17.7	18.0	18.5	-	17.3	17.5	18.0	-	16.4	16.7	17.2	-	15.5	15.7	16.3	-	14.6	14.8	15.4	-
		S/T	0.62	0.54	0.40	-	0.62	0.55	0.40	-	0.65	0.57	0.43	-	1.00	0.59	0.45	-	1.00	0.61	0.47	-	1.00	0.67	0.53	-
		ΔT	19	17	14	-	19	17	14	-	19	18	14	-	19	17	14	-	19	17	14	-	20	18	15	-
		kW	1.06	1.05	1.05	-	1.17	1.17	1.17	-	1.30	1.30	1.30	-	1.45	1.45	1.44	-	1.61	1.60	1.60	-	1.79	1.79	1.79	-
		Amps	4.0	4.0	4.0	-	4.5	4.5	4.5	-	5.1	5.1	5.1	-	5.8	5.8	5.8	-	6.5	6.5	6.5	-	7.4	7.4	7.4	-
		HI PR	244	245	247	-	283	284	286	-	323	325	326	-	367	368	370	-	414	415	417	-	464	465	467	-
		LO PR	125	126	129	-	132	134	137	-	139	141	144	-	145	146	149	-	150	152	155	-	157	159	162	-
	610	MBh	18.1	18.4	18.9	-	18.0	18.2	18.8	-	17.5	17.8	18.3	-	16.7	17.0	17.5	-	15.7	16.0	16.5	-	14.8	15.1	15.6	-
		S/T	0.69	0.61	0.47	-	0.69	0.62	0.48	-	0.72	0.64	0.50	-	1.00	0.66	0.52	-	1.00	0.69	0.54	-	1.00	0.74	0.60	-
		ΔT	18	16	13	-	18	16	13	-	18	16	13	-	18	16	13	-	18	16	13	-	19	17	14	-
		kW	1.06	1.06	1.06	-	1.18	1.18	1.18	-	1.31	1.31	1.31	-	1.45	1.45	1.45	-	1.61	1.61	1.61	-	1.80	1.80	1.80	-
		Amps	4.0	4.0	4.0	-	4.6	4.6	4.6	-	5.2	5.2	5.2	-	5.8	5.8	5.8	-	6.6	6.6	6.5	-	7.4	7.4	7.4	-
		HI PR	247	248	250	-	285	286	288	-	326	327	329	-	369	370	372	-	416	417	419	-	466	468	469	-
		LO PR	127	128	131	-	134	136	139	-	141	143	146	-	147	148	151	-	152	154	157	-	159	161	164	-
	675	MBh	18.4	18.6	19.2	-	18.2	18.5	19.0	-	17.8	18.0	18.5	-	16.9	17.2	17.7	-	16.0	16.2	16.8	-	15.1	15.3	15.9	-
		S/T	0.72	0.64	0.50	-	0.73	0.65	0.51	-	0.75	0.67	0.53	-	1.00	0.69	0.55	-	1.00	0.72	0.58	-	1.00	0.77	0.63	-
		ΔT	17	16	12	-	17	15	12	-	17	16	12	-	17	15	12	-	17	15	12	-	18	16	13	-
		kW	1.07	1.07	1.06	-	1.18	1.18	1.18	-	1.32	1.31	1.31	-	1.46	1.46	1.46	-	1.62	1.62	1.61	-	1.80	1.80	1.80	-
		Amps	4.1	4.1	4.0	-	4.6	4.6	4.6	-	5.2	5.2	5.2	-	5.8	5.8	5.8	-	6.6	6.6	6.6	-	7.4	7.4	7.4	-
		HI PR	248	250	251	-	287	288	290	-	328	329	330	-	371	372	374	-	418	419	421	-	468	469	471	-
		LO PR	128	130	133	-	136	138	141	-	143	144	147	-	148	150	153	-	154	155	159	-	161	162	166	-
75	525	MBh	17.9	18.1	18.7	19.5	17.7	18.0	18.5	19.3	17.3	17.5	18.1	18.9	16.5	**16.7**	17.2	18.1	15.5	15.7	16.3	17.1	14.6	14.8	15.4	16.2
		S/T	0.75	0.67	0.53	0.38	0.76	0.68	0.54	0.39	1.00	0.70	0.56	0.42	1.00	**0.72**	0.58	0.44	1.00	0.75	0.61	0.46	1.00	1.00	0.66	0.51
		ΔT	23	21	18	15	23	21	18	15	23	22	18	15	23	**21**	18	15	23	21	18	14	24	22	19	15
		kW	1.05	1.05	1.05	1.06	1.17	1.17	1.17	1.18	1.30	1.30	1.30	1.31	1.45	**1.45**	1.44	1.45	1.61	1.60	1.60	1.61	1.79	1.79	1.79	1.80
		Amps	4.0	4.0	4.0	4.0	4.5	4.5	4.5	4.6	5.1	5.1	5.1	5.2	5.8	**5.8**	5.8	5.8	6.5	6.5	6.5	6.5	7.4	7.4	7.4	7.4
		HI PR	245	246	247	252	283	284	286	290	324	325	326	331	367	**368**	370	374	414	415	417	421	464	465	467	471
		LO PR	125	126	129	135	132	134	137	142	139	141	144	149	145	**146**	149	155	150	152	155	160	157	159	162	167
	610	MBh	18.2	18.4	18.9	19.8	18.0	18.2	18.8	19.6	17.5	17.8	18.3	19.1	16.7	**17.0**	17.5	18.3	15.7	16.0	16.5	17.3	14.8	15.1	15.6	16.4
		S/T	0.82	0.74	0.60	0.46	1.00	0.75	0.61	0.46	1.00	0.78	0.64	0.49	1.00	**0.80**	0.66	0.51	1.00	0.82	0.68	0.53	1.00	1.00	0.73	0.58
		ΔT	22	20	17	13	22	20	17	13	22	20	17	14	22	**20**	17	13	22	20	17	13	23	21	18	14
		kW	1.06	1.06	1.06	1.07	1.18	1.18	1.18	1.19	1.31	1.31	1.31	1.32	1.45	**1.45**	1.45	1.46	1.61	1.61	1.61	1.62	1.80	1.80	1.80	1.80
		Amps	4.0	4.0	4.0	4.1	4.6	4.6	4.6	4.6	5.2	5.2	5.2	5.2	5.8	**5.8**	5.8	5.9	6.6	6.5	6.5	6.6	7.4	7.4	7.4	7.4
		HI PR	247	248	250	254	286	287	288	293	326	327	329	333	370	**371**	372	377	417	418	419	424	467	468	469	474
		LO PR	127	128	132	137	134	136	139	144	141	143	146	151	147	**148**	151	157	152	154	157	162	159	161	164	169
	675	MBh	18.4	18.6	19.2	20.0	18.2	18.5	19.0	19.8	17.8	18.0	18.5	19.4	17.0	**17.2**	17.7	18.6	16.0	16.2	16.8	17.6	15.1	15.3	15.9	16.7
		S/T	0.85	0.77	0.63	0.49	1.00	0.78	0.64	0.49	1.00	0.81	0.67	0.52	1.00	**0.83**	0.69	0.54	1.00	1.00	0.71	0.56	1.00	1.00	0.76	0.62
		ΔT	21	19	16	13	21	19	16	13	21	20	16	13	21	**19**	16	13	21	19	16	12	22	20	17	13
		kW	1.07	1.06	1.06	1.07	1.18	1.18	1.18	1.19	1.32	1.31	1.31	1.32	1.46	**1.46**	1.45	1.46	1.62	1.62	1.61	1.62	1.80	1.80	1.80	1.81
		Amps	4.1	4.0	4.0	4.1	4.6	4.6	4.6	4.6	5.2	5.2	5.2	5.2	5.8	**5.8**	5.8	5.9	6.6	6.6	6.6	6.6	7.4	7.4	7.4	7.5
		HI PR	249	250	251	256	287	288	290	294	328	329	331	335	371	**372**	374	378	418	419	421	425	468	469	471	475
		LO PR	129	130	133	139	136	138	141	146	143	144	147	153	148	**150**	153	158	154	155	159	164	161	162	166	171

IDB: Entering Indoor Dry Bulb Temperature

High and low pressures are measured at the liquid and suction service valves.

Shaded area reflects ACCA (TVA) Rating Conditions.

kW = Total system power

Amps = Outdoor unit amps (compressor + fan)

			Outdoor Ambient Temperature																							
			65ºF				75ºF				85ºF				95ºF				105ºF				115ºF			
			Entering Indoor Wet Bulb Temperature																							
IDB	Airflow		59	63	67	71	59	63	67	71	59	63	67	71	59	63	67	71	59	63	67	71	59	63	67	71
80	525	MBh	18.0	18.2	18.8	19.6	17.8	18.1	18.6	19.4	17.4	17.6	18.1	19.0	16.6	16.8	17.3	18.2	15.6	15.8	16.4	17.2	14.7	14.9	15.5	16.3
		S/T	1.00	0.80	0.66	0.51	1.00	0.81	0.67	0.52	1.00	0.83	0.69	0.55	1.00	1.00	0.71	0.57	1.00	1.00	0.74	0.59	1.00	1.00	0.79	0.64
		ΔT	27	25	22	19	27	25	22	19	27	25	22	19	27	25	22	19	27	25	22	18	28	26	23	19
		kW	1.06	1.05	1.05	1.06	1.17	1.17	1.17	1.18	1.30	1.30	1.30	1.31	1.45	1.45	1.44	1.45	1.61	1.60	1.60	1.61	1.79	1.79	1.79	1.80
		Amps	4.0	4.0	4.0	4.0	4.5	4.5	4.5	4.6	5.1	5.1	5.1	5.2	5.8	5.8	5.8	5.8	6.5	6.5	6.5	6.6	7.4	7.4	7.4	7.4
		HI PR	245	246	248	252	284	285	286	291	324	325	327	331	368	369	370	375	415	416	417	422	465	466	468	472
		LO PR	125	127	130	135	133	134	138	143	140	141	144	150	145	147	150	155	151	152	155	161	158	159	162	168
	610	MBh	18.2	18.5	19.0	19.8	18.1	18.3	18.9	19.7	17.6	17.9	18.4	19.2	16.8	17.1	**17.6**	18.4	15.8	16.1	16.6	17.4	14.9	15.2	15.7	16.5
		S/T	1.00	0.87	0.73	0.59	1.00	0.88	0.74	0.59	1.00	0.91	0.77	0.62	1.00	1.00	**0.79**	0.64	1.00	1.00	0.81	0.66	1.00	1.00	0.86	0.71
		ΔT	26	24	21	17	26	24	21	17	26	24	21	18	26	24	**21**	17	26	24	20	17	27	25	22	18
		kW	1.06	1.06	1.06	1.07	1.18	1.18	1.18	1.19	1.31	1.31	1.31	1.32	1.45	1.45	**1.45**	1.46	1.61	1.61	1.61	1.62	1.80	1.80	1.80	1.81
		Amps	4.0	4.0	4.0	4.1	4.6	4.6	4.6	4.6	5.2	5.2	5.2	5.2	5.8	5.8	**5.8**	5.9	6.6	6.6	6.5	6.6	7.4	7.4	7.4	7.4
		HI PR	247	248	250	254	286	287	289	293	326	328	329	334	370	371	**373**	377	417	418	420	424	467	468	470	474
		LO PR	127	129	132	137	135	136	140	145	142	143	146	152	147	149	**152**	157	153	154	157	163	160	161	164	170
	675	MBh	18.5	18.7	19.3	20.1	18.3	18.6	19.1	19.9	17.9	18.1	18.6	19.5	17.0	17.3	17.8	18.7	16.1	16.3	16.9	17.7	15.2	15.4	16.0	16.8
		S/T	1.00	0.90	0.76	0.62	1.00	0.91	0.77	0.62	1.00	0.94	0.80	0.65	1.00	1.00	0.82	0.67	1.00	1.00	0.84	0.69	1.00	1.00	0.89	0.74
		ΔT	25	23	20	17	25	23	20	17	25	24	20	17	25	23	20	17	25	23	20	16	26	24	21	17
		kW	1.07	1.07	1.06	1.07	1.18	1.18	1.18	1.19	1.32	1.31	1.31	1.32	1.46	1.46	1.46	1.46	1.62	1.62	1.61	1.62	1.80	1.80	1.80	1.81
		Amps	4.1	4.1	4.0	4.1	4.6	4.6	4.6	4.6	5.2	5.2	5.2	5.2	5.8	5.8	5.8	5.9	6.6	6.6	6.6	6.6	7.4	7.4	7.4	7.5
		HI PR	249	250	252	256	288	289	291	295	328	329	331	335	372	373	375	379	419	420	422	426	469	470	472	476
		LO PR	129	131	134	139	137	138	141	147	143	145	148	153	149	150	154	159	154	156	159	165	161	163	166	171
85	525	MBh	18.3	18.5	19.1	19.9	18.1	18.4	18.9	19.7	17.7	17.9	18.4	19.3	16.9	17.1	17.6	18.5	15.9	16.1	16.7	17.5	15.0	15.2	15.8	16.6
		S/T	1.00	0.91	0.77	0.62	1.00	1.00	0.77	0.63	1.00	1.00	0.80	0.65	1.00	1.00	0.82	0.67	1.00	1.00	0.84	0.69	1.00	1.00	1.00	0.75
		ΔT	31	29	25	22	30	29	25	22	31	29	26	22	30	29	25	22	30	28	25	22	31	30	26	23
		kW	1.06	1.06	1.05	1.06	1.18	1.17	1.17	1.18	1.31	1.31	1.30	1.31	1.45	1.45	1.45	1.45	1.61	1.61	1.60	1.61	1.79	1.79	1.79	1.80
		Amps	4.0	4.0	4.0	4.0	4.6	4.6	4.5	4.6	5.2	5.2	5.1	5.2	5.8	5.8	5.8	5.8	6.5	6.5	6.5	6.6	7.4	7.4	7.4	7.4
		HI PR	246	247	249	253	285	286	288	292	325	326	328	332	369	370	372	376	416	417	419	423	466	467	469	473
		LO PR	127	129	132	137	135	136	140	145	141	143	146	151	147	149	152	157	153	154	157	163	160	161	164	170
	610	MBh	18.5	18.8	19.3	20.2	18.4	18.6	19.2	20.0	17.9	18.2	18.7	19.5	17.1	17.4	17.9	18.7	16.1	16.4	16.9	17.7	15.2	15.5	16.0	16.8
		S/T	1.00	0.98	0.84	0.69	1.00	1.00	0.84	0.70	1.00	1.00	0.87	0.72	1.00	1.00	0.89	0.74	1.00	1.00	1.00	0.77	1.00	1.00	1.00	0.82
		ΔT	29	28	24	21	29	28	24	21	30	28	24	21	29	27	24	21	29	27	24	21	30	28	25	22
		kW	1.06	1.06	1.06	1.07	1.18	1.18	1.18	1.19	1.31	1.31	1.31	1.32	1.46	1.45	1.45	1.46	1.61	1.61	1.61	1.62	1.80	1.80	1.80	1.81
		Amps	4.0	4.0	4.0	4.1	4.6	4.6	4.6	4.6	5.2	5.2	5.2	5.2	5.8	5.8	5.8	5.9	6.6	6.6	6.6	6.6	7.4	7.4	7.4	7.4
		HI PR	249	250	251	256	287	288	290	294	328	329	330	335	371	372	374	378	418	419	421	425	468	469	471	475
		LO PR	129	131	134	139	137	138	142	147	143	145	148	154	149	151	154	159	155	156	159	165	162	163	166	172
	675	MBh	18.8	19.0	19.6	20.4	18.6	18.9	19.4	20.2	18.2	18.4	18.9	19.8	17.4	17.6	18.1	19.0	16.4	16.6	17.2	18.0	15.5	15.7	16.3	17.1
		S/T	1.00	1.00	0.87	0.72	1.00	1.00	0.88	0.73	1.00	1.00	0.90	0.75	1.00	1.00	0.92	0.77	1.00	1.00	1.00	0.80	1.00	1.00	1.00	0.85
		ΔT	29	27	23	20	29	27	23	20	29	27	24	20	28	27	23	20	28	26	23	20	29	28	24	21
		kW	1.07	1.07	1.07	1.07	1.19	1.19	1.18	1.19	1.32	1.32	1.32	1.32	1.46	1.46	1.46	1.47	1.62	1.62	1.62	1.63	1.81	1.80	1.80	1.81
		Amps	4.1	4.1	4.1	4.1	4.6	4.6	4.6	4.6	5.2	5.2	5.2	5.2	5.9	5.9	5.8	5.9	6.6	6.6	6.6	6.6	7.4	7.4	7.4	7.5
		HI PR	250	251	253	257	289	290	292	296	329	330	332	336	373	374	376	380	420	421	423	427	470	471	473	477
		LO PR	131	132	136	141	139	140	143	149	145	147	150	155	151	152	156	161	156	158	161	166	163	165	168	173

IDB: Entering Indoor Dry Bulb Temperature

High and low pressures are measured at the liquid and suction service valves.

Shaded area reflects AHRI Rating Conditions.

kW = Total system power

Amps = Outdoor unit amps (compressor + fan)

			Outdoor Ambient Temperature																							
			65ºF				75ºF				85ºF				95ºF				105ºF				115ºF			
			Entering Indoor Wet Bulb Temperature																							
IDB	Airflow		59	63	67	71	59	63	67	71	59	63	67	71	59	63	67	71	59	63	67	71	59	63	67	71
70	525	MBh	17.7	17.9	18.4	-	17.5	17.8	18.3	-	17.0	17.3	17.8	-	16.3	16.5	17.0	-	15.3	15.5	16.1	-	14.4	14.6	15.2	-
		S/T	0.62	0.54	0.40	-	0.63	0.55	0.41	-	0.65	0.57	0.43	-	1.00	0.59	0.45	-	1.00	0.62	0.48	-	1.00	0.67	0.53	-
		ΔT	19	17	14	-	19	17	14	-	19	18	14	-	19	17	14	-	19	17	14	-	20	18	15	-
		kW	1.13	1.12	1.12	-	1.24	1.24	1.24	-	1.38	1.38	1.37	-	1.52	1.52	1.52	-	1.68	1.68	1.68	-	1.87	1.87	1.86	-
		Amps	4.3	4.3	4.3	-	4.9	4.9	4.8	-	5.5	5.5	5.4	-	6.1	6.1	6.1	-	6.9	6.8	6.8	-	7.7	7.7	7.7	-
		Hi PR	236	237	238	-	273	274	275	-	312	313	314	-	354	355	356	-	399	400	402	-	447	448	450	-
		Lo PR	125	127	130	-	133	134	137	-	139	141	144	-	145	147	150	-	151	152	155	-	157	159	162	-
	614	MBh	17.9	18.2	18.7	-	17.8	18.0	18.6	-	17.3	17.6	18.1	-	16.5	16.8	17.3	-	15.5	15.8	16.3	-	14.7	14.9	15.4	-
		S/T	0.70	0.62	0.48	-	0.70	0.62	0.48	-	0.73	0.65	0.51	-	1.00	0.67	0.53	-	1.00	0.69	0.55	-	1.00	0.75	0.61	-
		ΔT	18	16	13	-	18	16	13	-	18	16	13	-	18	16	13	-	18	16	13	-	19	17	14	-
		kW	1.13	1.13	1.13	-	1.25	1.25	1.25	-	1.38	1.38	1.38	-	1.53	1.53	1.52	-	1.69	1.69	1.68	-	1.87	1.87	1.87	-
		Amps	4.3	4.3	4.3	-	4.9	4.9	4.9	-	5.5	5.5	5.5	-	6.2	6.1	6.1	-	6.9	6.9	6.9	-	7.7	7.7	7.7	-
		Hi PR	238	239	241	-	275	276	278	-	314	315	317	-	356	357	359	-	401	402	404	-	450	451	452	-
		Lo PR	127	129	132	-	135	136	140	-	141	143	146	-	147	149	152	-	153	154	157	-	160	161	164	-
	675	MBh	18.2	18.4	18.9	-	18.0	18.2	18.8	-	17.5	17.8	18.3	-	16.7	17.0	17.5	-	15.8	16.0	16.5	-	14.9	15.1	15.7	-
		S/T	0.73	0.65	0.51	-	0.73	0.65	0.51	-	0.76	0.68	0.54	-	1.00	0.70	0.56	-	1.00	0.72	0.58	-	1.00	0.78	0.64	-
		ΔT	17	15	12	-	17	15	12	-	17	16	12	-	17	15	12	-	17	15	12	-	18	16	13	-
		kW	1.14	1.14	1.13	-	1.26	1.25	1.25	-	1.39	1.39	1.38	-	1.53	1.53	1.53	-	1.69	1.69	1.69	-	1.88	1.88	1.88	-
		Amps	4.4	4.4	4.4	-	4.9	4.9	4.9	-	5.5	5.5	5.5	-	6.2	6.2	6.2	-	6.9	6.9	6.9	-	7.8	7.8	7.7	-
		Hi PR	239	240	242	-	277	278	279	-	316	317	318	-	358	359	360	-	403	404	406	-	451	452	454	-
		Lo PR	129	130	134	-	136	138	141	-	143	145	148	-	149	150	153	-	154	156	159	-	161	163	166	-
75	525	MBh	17.7	17.9	18.5	19.3	17.5	17.8	18.3	19.1	17.1	17.3	17.8	18.6	16.3	16.5	17.0	17.8	15.3	15.5	16.1	16.9	14.4	14.7	15.2	16.0
		S/T	0.76	0.68	0.53	0.38	0.76	0.68	0.54	0.39	1.00	0.71	0.57	0.42	1.00	0.73	0.59	0.44	1.00	0.75	0.61	0.46	1.00	1.00	0.66	0.52
		ΔT	23	21	18	15	23	21	18	15	23	21	18	15	23	21	18	14	23	21	18	14	24	22	19	15
		kW	1.12	1.12	1.12	1.13	1.24	1.24	1.24	1.25	1.38	1.37	1.37	1.38	1.52	1.52	1.52	1.52	1.68	1.68	1.68	1.68	1.87	1.87	1.86	1.87
		Amps	4.3	4.3	4.3	4.3	4.9	4.8	4.8	4.9	5.5	5.5	5.4	5.5	6.1	6.1	6.1	6.1	6.8	6.8	6.8	6.9	7.7	7.7	7.7	7.7
		Hi PR	236	237	238	243	273	274	276	280	312	313	315	319	354	355	357	361	399	400	402	406	448	449	450	454
		Lo PR	125	127	130	135	133	134	137	143	139	141	144	149	145	147	150	155	151	152	155	161	158	159	162	168
	614	MBh	17.9	18.2	18.7	19.5	17.8	18.0	18.6	19.4	17.3	17.6	18.1	18.9	16.5	**16.8**	17.3	18.1	15.6	15.8	16.3	17.1	14.7	14.9	15.4	16.3
		S/T	0.83	0.75	0.61	0.46	1.00	0.76	0.62	0.47	1.00	0.79	0.64	0.49	1.00	**0.81**	0.66	0.51	1.00	0.83	0.69	0.54	1.00	1.00	0.74	0.59
		ΔT	22	20	17	13	22	20	17	13	22	20	17	14	22	**20**	17	13	21	20	16	13	23	21	17	14
		kW	1.13	1.13	1.13	1.14	1.25	1.25	1.25	1.26	1.38	1.38	1.38	1.39	1.53	**1.53**	1.52	1.53	1.69	1.69	1.68	1.69	1.87	1.87	1.87	1.88
		Amps	4.3	4.3	4.3	4.4	4.9	4.9	4.9	4.9	5.5	5.5	5.5	5.5	6.1	**6.1**	6.1	6.2	6.9	6.9	6.9	6.9	7.7	7.7	7.7	7.8
		Hi PR	238	239	241	245	275	276	278	282	314	315	317	321	356	**357**	359	363	402	403	404	408	450	451	453	457
		Lo PR	127	129	132	137	135	136	140	145	142	143	146	152	147	**149**	152	157	153	154	157	163	160	161	164	170
	675	MBh	18.2	18.4	18.9	19.7	18.0	18.3	18.8	19.6	17.5	17.8	18.3	19.1	16.7	17.0	17.5	18.3	15.8	16.0	16.6	17.4	14.9	15.1	15.7	16.5
		S/T	0.86	0.78	0.64	0.49	1.00	0.79	0.65	0.50	1.00	0.82	0.67	0.52	1.00	0.84	0.69	0.54	1.00	1.00	0.72	0.57	1.00	1.00	0.77	0.62
		ΔT	21	19	16	13	21	19	16	13	21	19	16	13	21	19	16	13	21	19	16	12	22	20	17	13
		kW	1.14	1.14	1.13	1.14	1.25	1.25	1.25	1.26	1.39	1.39	1.38	1.39	1.53	1.53	1.53	1.54	1.69	1.69	1.69	1.70	1.88	1.88	1.88	1.88
		Amps	4.4	4.4	4.4	4.4	4.9	4.9	4.9	4.9	5.5	5.5	5.5	5.5	6.2	6.2	6.2	6.2	6.9	6.9	6.9	6.9	7.8	7.8	7.7	7.8
		Hi PR	240	241	242	246	277	278	280	284	316	317	319	323	358	359	361	365	403	404	406	410	451	452	454	458
		Lo PR	129	130	134	139	136	138	141	147	143	145	148	153	149	150	153	159	154	156	159	164	161	163	166	171

IDB: Entering Indoor Dry Bulb Temperature

High and low pressures are measured at the liquid and suction service valves.

Shaded area reflects ACCA (TVA) Rating Conditions.

kW = Total system power

Amps = Outdoor unit amps (compressor + fan)

			Outdoor Ambient Temperature																							
			65ºF				75ºF				85ºF				95ºF				105ºF				115ºF			
			Entering Indoor Wet Bulb Temperature																							
IDB	Airflow		59	63	67	71	59	63	67	71	59	63	67	71	59	63	67	71	59	63	67	71	59	63	67	71
80	525	MBh	17.8	18.0	18.5	19.4	17.6	17.9	18.4	19.2	17.1	17.4	17.9	18.7	16.4	16.6	17.1	17.9	15.4	15.6	16.2	17.0	14.5	14.7	15.3	16.1
		S/T	1.00	0.81	0.67	0.52	1.00	0.81	0.67	0.52	1.00	0.84	0.70	0.55	1.00	1.00	0.72	0.57	1.00	1.00	0.74	0.59	1.00	1.00	0.80	0.65
		ΔT	27	25	22	18	27	25	22	18	27	25	22	19	27	25	22	18	27	25	22	18	28	26	23	19
		kW	1.13	1.12	1.12	1.13	1.24	1.24	1.24	1.25	1.38	1.38	1.37	1.38	1.52	1.52	1.52	1.53	1.68	1.68	1.68	1.69	1.87	1.87	1.86	1.87
		Amps	4.3	4.3	4.3	4.3	4.9	4.9	4.8	4.9	5.5	5.5	5.4	5.5	6.1	6.1	6.1	6.1	6.9	6.8	6.8	6.9	7.7	7.7	7.7	7.7
		Hi PR	236	237	239	243	273	274	276	280	312	313	315	319	354	355	357	361	400	401	402	406	448	449	451	455
		Lo PR	126	127	130	136	133	135	138	143	140	141	145	150	146	147	150	156	151	153	156	161	158	160	163	168
	614	MBh	18.0	18.3	18.8	19.6	17.9	18.1	18.7	19.5	17.4	17.7	18.2	19.0	16.6	16.9	**17.4**	18.2	15.6	15.9	16.4	17.2	14.8	15.0	15.5	16.3
		S/T	1.00	0.88	0.74	0.59	1.00	0.89	0.75	0.60	1.00	0.92	0.77	0.63	1.00	1.00	**0.80**	0.65	1.00	1.00	0.82	0.67	1.00	1.00	0.87	0.72
		ΔT	26	24	21	17	26	24	21	17	26	24	21	17	26	24	**21**	17	25	24	20	17	26	25	21	18
		kW	1.13	1.13	1.13	1.14	1.25	1.25	1.25	1.26	1.38	1.38	1.38	1.39	1.53	1.53	**1.52**	1.53	1.69	1.69	1.68	1.69	1.87	1.87	1.87	1.88
		Amps	4.3	4.3	4.3	4.4	4.9	4.9	4.9	4.9	5.5	5.5	5.5	5.5	6.2	6.1	**6.1**	6.2	6.9	6.9	6.9	6.9	7.7	7.7	7.7	7.8
		Hi PR	239	240	241	245	276	277	278	283	315	316	317	322	357	358	**359**	364	402	403	405	409	450	451	453	457
		Lo PR	128	129	133	138	135	137	140	145	142	144	147	152	148	149	**152**	158	153	155	158	163	160	162	165	170
	675	MBh	18.3	18.5	19.0	19.8	18.1	18.3	18.9	19.7	17.6	17.9	18.4	19.2	16.8	17.1	17.6	18.4	15.9	16.1	16.6	17.5	15.0	15.2	15.8	16.6
		S/T	1.00	0.91	0.77	0.62	1.00	0.92	0.78	0.63	1.00	0.95	0.80	0.66	1.00	1.00	0.83	0.68	1.00	1.00	0.85	0.70	1.00	1.00	0.90	0.75
		ΔT	25	23	20	16	25	23	20	16	25	23	20	17	25	23	20	16	25	23	20	16	26	24	21	17
		kW	1.14	1.14	1.13	1.14	1.26	1.25	1.25	1.26	1.39	1.39	1.38	1.39	1.53	1.53	1.53	1.54	1.69	1.69	1.69	1.70	1.88	1.88	1.88	1.88
		Amps	4.4	4.4	4.4	4.4	4.9	4.9	4.9	4.9	5.5	5.5	5.5	5.5	6.2	6.2	6.2	6.2	6.9	6.9	6.9	6.9	7.8	7.8	7.7	7.8
		Hi PR	240	241	243	247	277	278	280	284	316	317	319	323	358	359	361	365	404	405	406	410	452	453	455	459
		Lo PR	129	131	134	139	137	139	142	147	144	145	148	154	149	151	154	159	155	156	160	165	162	163	167	172
85	525	MBh	18.1	18.3	18.8	19.7	17.9	18.2	18.7	19.5	17.4	17.7	18.2	19.0	16.7	16.9	17.4	18.2	15.7	15.9	16.5	17.3	14.8	15.0	15.6	16.4
		S/T	1.00	0.91	0.77	0.62	1.00	1.00	0.78	0.63	1.00	1.00	0.80	0.66	1.00	1.00	0.83	0.68	1.00	1.00	0.85	0.70	1.00	1.00	1.00	0.75
		ΔT	30	29	25	22	30	28	25	22	30	29	25	22	30	28	25	22	30	28	25	22	31	29	26	23
		kW	1.13	1.13	1.12	1.13	1.25	1.25	1.24	1.25	1.38	1.38	1.38	1.38	1.52	1.52	1.52	1.53	1.68	1.68	1.68	1.69	1.87	1.87	1.87	1.88
		Amps	4.3	4.3	4.3	4.4	4.9	4.9	4.9	4.9	5.5	5.5	5.5	5.5	6.1	6.1	6.1	6.2	6.9	6.9	6.8	6.9	7.7	7.7	7.7	7.7
		Hi PR	237	238	240	244	275	276	277	281	314	315	316	320	356	357	358	362	401	402	403	408	449	450	452	456
		Lo PR	128	129	132	138	135	137	140	145	142	143	147	152	147	149	152	158	153	155	158	163	160	161	165	170
	614	MBh	18.3	18.6	19.1	19.9	18.2	18.4	19.0	19.8	17.7	18.0	18.5	19.3	16.9	17.2	17.7	18.5	15.9	16.2	16.7	17.5	15.1	15.3	15.8	16.6
		S/T	1.00	0.99	0.85	0.70	1.00	1.00	0.85	0.71	1.00	1.00	0.88	0.73	1.00	1.00	0.90	0.75	1.00	1.00	1.00	0.77	1.00	1.00	1.00	0.83
		ΔT	29	27	24	21	29	27	24	21	29	27	24	21	29	27	24	21	29	27	24	20	30	28	25	21
		kW	1.13	1.13	1.13	1.14	1.25	1.25	1.25	1.26	1.39	1.38	1.38	1.39	1.53	1.53	1.53	1.54	1.69	1.69	1.69	1.70	1.88	1.88	1.87	1.88
		Amps	4.4	4.4	4.3	4.4	4.9	4.9	4.9	4.9	5.5	5.5	5.5	5.5	6.2	6.2	6.1	6.2	6.9	6.9	6.9	6.9	7.8	7.7	7.7	7.8
		Hi PR	240	241	242	246	277	278	280	284	316	317	319	323	358	359	361	365	403	404	406	410	451	452	454	458
		Lo PR	130	131	134	140	137	139	142	147	144	145	149	154	150	151	154	160	155	157	160	165	162	164	167	172
	675	MBh	18.6	18.8	19.3	20.1	18.4	18.6	19.2	20.0	17.9	18.2	18.7	19.5	17.1	17.4	17.9	18.7	16.2	16.4	16.9	17.8	15.3	15.5	16.1	16.9
		S/T	1.00	1.00	0.88	0.73	1.00	1.00	0.88	0.74	1.00	1.00	0.91	0.76	1.00	1.00	0.93	0.78	1.00	1.00	1.00	0.80	1.00	1.00	1.00	0.86
		ΔT	28	27	23	20	28	27	23	20	29	27	23	20	28	26	23	20	28	26	23	20	29	27	24	21
		kW	1.14	1.14	1.14	1.15	1.26	1.26	1.25	1.26	1.39	1.39	1.39	1.40	1.53	1.53	1.53	1.54	1.69	1.69	1.69	1.70	1.88	1.88	1.88	1.89
		Amps	4.4	4.4	4.4	4.4	4.9	4.9	4.9	4.9	5.5	5.5	5.5	5.6	6.2	6.2	6.2	6.2	6.9	6.9	6.9	6.9	7.8	7.8	7.8	7.8
		Hi PR	241	242	244	248	278	279	281	285	317	318	320	324	359	360	362	366	405	406	407	411	453	454	456	460
		Lo PR	131	133	136	141	139	140	144	149	146	147	150	156	151	153	156	161	157	158	161	167	164	165	168	174

IDB: Entering Indoor Dry Bulb Temperature

High and low pressures are measured at the liquid and suction service valves.

Shaded area reflects AHRI Rating Conditions.

kW = Total system power

Amps = Outdoor unit amps (compressor + fan)

			Outdoor Ambient Temperature																							
			65ºF				75ºF				85ºF				95ºF				105ºF				115ºF			
			Entering Indoor Wet Bulb Temperature																							
IDB	Airflow		59	63	67	71	59	63	67	71	59	63	67	71	59	63	67	71	59	63	67	71	59	63	67	71
70	700	MBh	23.7	24.0	24.7	-	23.4	23.8	24.5	-	22.8	23.2	23.9	-	21.7	22.1	22.8	-	20.4	20.8	21.5	-	19.2	19.6	20.3	-
		S/T	0.59	0.51	0.37	-	0.60	0.52	0.37	-	0.62	0.54	0.40	-	0.65	0.56	0.42	-	1.00	0.59	0.44	-	1.00	0.64	0.50	-
		ΔT	19	17	14	-	19	17	14	-	19	17	14	-	19	17	14	-	19	17	14	-	20	18	15	-
		kW	1.41	1.40	1.40	-	1.57	1.57	1.57	-	1.76	1.76	1.75	-	1.96	1.96	1.95	-	2.18	2.18	2.18	-	2.44	2.44	2.44	-
		Amps	5.2	5.2	5.2	-	6.0	5.9	5.9	-	6.8	6.8	6.8	-	7.7	7.7	7.7	-	8.7	8.7	8.7	-	9.9	9.9	9.9	-
		HI PR	249	250	252	-	288	290	291	-	330	331	333	-	374	375	377	-	422	423	425	-	474	475	476	-
		LO PR	123	124	128	-	130	132	135	-	137	139	142	-	143	144	147	-	148	150	153	-	155	157	160	-
	800	MBh	23.9	24.2	25.0	-	23.7	24.0	24.7	-	23.1	23.4	24.1	-	22.0	22.3	23.1	-	20.7	21.0	21.7	-	19.5	19.8	20.6	-
		S/T	0.67	0.59	0.44	-	0.67	0.59	0.45	-	0.70	0.62	0.48	-	1.00	0.64	0.50	-	1.00	0.66	0.52	-	1.00	0.72	0.58	-
		ΔT	18	16	13	-	18	16	13	-	18	16	13	-	18	16	13	-	18	16	13	-	19	17	14	-
		kW	1.41	1.41	1.41	-	1.58	1.58	1.58	-	1.77	1.76	1.76	-	1.97	1.96	1.96	-	2.19	2.19	2.19	-	2.45	2.45	2.45	-
		Amps	5.2	5.2	5.2	-	6.0	6.0	6.0	-	6.8	6.8	6.8	-	7.8	7.8	7.7	-	8.8	8.8	8.8	-	10.0	10.0	10.0	-
		HI PR	251	252	254	-	290	292	293	-	332	333	335	-	376	377	379	-	424	426	427	-	476	477	479	-
		LO PR	125	126	129	-	132	134	137	-	139	140	143	-	144	146	149	-	150	151	154	-	157	158	161	-
	870	MBh	24.1	24.5	25.2	-	23.9	24.2	25.0	-	23.3	23.6	24.3	-	22.2	22.6	23.3	-	20.9	21.2	22.0	-	19.7	20.1	20.8	-
		S/T	0.71	0.62	0.48	-	0.71	0.63	0.49	-	0.74	0.66	0.51	-	1.00	0.68	0.53	-	1.00	0.70	0.56	-	1.00	0.76	0.61	-
		ΔT	17	16	12	-	17	15	12	-	17	16	13	-	17	15	12	-	17	15	12	-	18	16	13	-
		kW	1.42	1.42	1.42	-	1.59	1.58	1.58	-	1.77	1.77	1.77	-	1.97	1.97	1.97	-	2.20	2.19	2.19	-	2.46	2.46	2.45	-
		Amps	5.3	5.3	5.2	-	6.0	6.0	6.0	-	6.9	6.9	6.8	-	7.8	7.8	7.8	-	8.8	8.8	8.8	-	10.0	10.0	10.0	-
		HI PR	252	253	255	-	292	293	295	-	333	334	336	-	378	379	381	-	426	427	429	-	477	478	480	-
		LO PR	126	127	130	-	133	135	138	-	140	141	145	-	145	147	150	-	151	152	156	-	158	159	163	-
75	700	MBh	23.7	24.0	24.7	25.8	23.5	23.8	24.5	25.6	22.8	23.2	23.9	25.0	21.8	**22.1**	22.8	23.9	20.5	20.8	21.5	22.6	19.3	19.6	20.3	21.4
		S/T	0.73	0.65	0.50	0.35	0.73	0.65	0.51	0.36	1.00	0.68	0.54	0.39	1.00	**0.70**	0.56	0.41	1.00	0.72	0.58	0.43	1.00	1.00	0.64	0.48
		ΔT	23	21	18	15	23	21	18	14	23	21	18	15	23	**21**	18	14	22	21	17	14	23	22	19	15
		kW	1.40	1.40	1.40	1.41	1.57	1.57	1.57	1.58	1.76	1.75	1.75	1.76	1.96	**1.95**	1.95	1.96	2.18	2.18	2.18	2.19	2.44	2.44	2.44	2.45
		Amps	5.2	5.2	5.2	5.2	5.9	5.9	5.9	6.0	6.8	6.8	6.8	6.8	7.7	**7.7**	7.7	7.8	8.7	8.7	8.7	8.8	9.9	9.9	9.9	10.0
		HI PR	249	250	252	256	289	290	291	296	330	331	333	337	375	**376**	377	382	423	424	425	430	474	475	477	481
		LO PR	123	125	128	133	131	132	135	140	137	139	142	147	143	**144**	147	153	148	150	153	158	155	157	160	165
	800	MBh	23.9	24.3	25.0	26.1	23.7	24.0	24.8	25.8	23.1	23.4	24.1	25.2	22.0	**22.4**	23.1	24.2	20.7	21.1	21.8	22.8	19.5	19.9	20.6	21.7
		S/T	0.80	0.72	0.58	0.43	0.81	0.73	0.59	0.44	1.00	0.76	0.61	0.46	1.00	**0.78**	0.63	0.48	1.00	0.80	0.66	0.51	1.00	1.00	0.71	0.56
		ΔT	22	20	17	13	21	20	17	13	22	20	17	14	21	**20**	17	13	21	20	16	13	22	21	17	14
		kW	1.41	1.41	1.41	1.42	1.58	1.58	1.58	1.59	1.76	1.76	1.76	1.77	1.96	**1.96**	1.96	1.97	2.19	2.19	2.18	2.20	2.45	2.45	2.45	2.46
		Amps	5.2	5.2	5.2	5.3	6.0	6.0	6.0	6.0	6.8	6.8	6.8	6.9	7.8	**7.7**	7.7	7.8	8.8	8.8	8.8	8.8	10.0	10.0	10.0	10.0
		HI PR	251	252	254	258	291	292	294	298	332	333	335	339	377	**378**	379	384	425	426	427	432	476	477	479	483
		LO PR	125	126	129	135	132	134	137	142	139	140	143	149	144	**146**	149	154	150	151	154	160	157	158	161	167
	870	MBh	24.1	24.5	25.2	26.3	23.9	24.3	25.0	26.1	23.3	23.6	24.3	25.4	22.2	**22.6**	23.3	24.4	20.9	21.3	22.0	23.1	19.7	20.1	20.8	21.9
		S/T	0.84	0.76	0.62	0.47	1.00	0.77	0.62	0.47	1.00	0.79	0.65	0.50	1.00	**0.82**	0.67	0.52	1.00	0.84	0.69	0.54	1.00	1.00	0.75	0.60
		ΔT	21	19	16	13	21	19	16	13	21	19	16	13	21	**19**	16	13	21	19	16	13	22	20	17	14
		kW	1.42	1.42	1.41	1.43	1.58	1.58	1.58	1.59	1.77	1.77	1.77	1.78	1.97	**1.97**	1.97	1.98	2.19	2.19	2.19	2.20	2.46	2.46	2.45	2.47
		Amps	5.3	5.2	5.2	5.3	6.0	6.0	6.0	6.1	6.9	6.9	6.8	6.9	7.8	**7.8**	7.8	7.8	8.8	8.8	8.8	8.8	10.0	10.0	10.0	10.0
		HI PR	253	254	255	260	292	293	295	299	333	335	336	341	378	**379**	381	385	426	427	429	433	477	478	480	484
		LO PR	126	127	130	136	133	135	138	143	140	141	145	150	146	**147**	150	155	151	153	156	161	158	159	163	168

IDB: Entering Indoor Dry Bulb Temperature

High and low pressures are measured at the liquid and suction service valves.

Shaded area reflects ACCA (TVA) Rating Conditions.

kW = Total system power

Amps = Outdoor unit amps (compressor + fan)

			Outdoor Ambient Temperature																							
			65ºF				75ºF				85ºF				95ºF				105ºF				115ºF			
			Entering Indoor Wet Bulb Temperature																							
IDB	Airflow		59	63	67	71	59	63	67	71	59	63	67	71	59	63	67	71	59	63	67	71	59	63	67	71
80	700	MBh	23.8	24.1	24.8	25.9	23.6	23.9	24.6	25.7	23.0	23.3	24.0	25.1	21.9	22.2	22.9	24.0	20.6	20.9	21.6	22.7	19.4	19.7	20.4	21.5
		S/T	1.00	0.78	0.64	0.49	1.00	0.79	0.64	0.49	1.00	0.81	0.67	0.52	1.00	0.83	0.69	0.54	1.00	1.00	0.71	0.56	1.00	1.00	0.77	0.62
		ΔT	26	25	22	18	26	25	21	18	27	25	22	18	26	25	21	18	26	24	21	18	27	25	22	19
		kW	1.41	1.40	1.40	1.41	1.57	1.57	1.57	1.58	1.76	1.76	1.75	1.76	1.96	1.96	1.95	1.97	2.18	2.18	2.18	2.19	2.44	2.44	2.44	2.45
		Amps	5.2	5.2	5.2	5.2	6.0	5.9	5.9	6.0	6.8	6.8	6.8	6.8	7.7	7.7	7.7	7.8	8.7	8.7	8.7	8.8	9.9	9.9	9.9	10.0
		HI PR	250	251	252	257	289	290	292	296	330	332	333	338	375	376	378	382	423	424	426	430	474	475	477	482
		LO PR	124	125	128	133	131	133	136	141	138	139	142	148	143	145	148	153	149	150	153	159	156	157	160	166
	800	MBh	24.0	24.4	25.1	26.2	23.8	24.2	24.9	26.0	23.2	23.6	24.3	25.3	22.1	22.5	23.2	24.3	20.8	21.2	21.9	23.0	19.6	20.0	20.7	21.8
		S/T	1.00	0.86	0.71	0.56	1.00	0.86	0.72	0.57	1.00	0.89	0.75	0.59	1.00	1.00	0.77	0.62	1.00	1.00	0.79	0.64	1.00	1.00	0.84	0.69
		ΔT	25	24	20	17	25	24	20	17	25	24	21	17	25	24	20	17	25	23	20	17	26	24	21	18
		kW	1.41	1.41	1.41	1.42	1.58	1.58	1.58	1.59	1.77	1.76	1.76	1.77	1.97	1.96	1.96	1.97	2.19	2.19	2.19	2.20	2.45	2.45	2.45	2.46
		Amps	5.2	5.2	5.2	5.3	6.0	6.0	6.0	6.0	6.8	6.8	6.8	6.9	7.8	7.8	7.7	7.8	8.8	8.8	8.8	8.8	10.0	10.0	10.0	10.0
		HI PR	252	253	255	259	291	292	294	298	333	334	335	340	377	378	380	384	425	426	428	432	476	477	479	484
		LO PR	125	127	130	135	133	134	137	143	139	141	144	149	145	146	150	155	150	152	155	160	157	159	162	167
	870	MBh	24.3	24.6	25.3	26.4	24.0	24.4	25.1	26.2	23.4	23.8	24.5	25.6	22.4	22.7	**23.4**	24.5	21.0	21.4	22.1	23.2	19.9	20.2	20.9	22.0
		S/T	1.00	0.89	0.75	0.60	1.00	0.90	0.76	0.61	1.00	0.93	0.78	0.63	1.00	1.00	**0.80**	0.65	1.00	1.00	0.83	0.68	1.00	1.00	0.88	0.73
		ΔT	25	23	20	17	25	23	20	17	25	23	20	17	25	23	**20**	16	24	23	20	16	25	24	21	17
		kW	1.42	1.42	1.42	1.43	1.59	1.58	1.58	1.59	1.77	1.77	1.77	1.78	1.97	1.97	**1.97**	1.98	2.19	2.19	2.19	2.20	2.46	2.46	2.45	2.47
		Amps	5.3	5.3	5.2	5.3	6.0	6.0	6.0	6.1	6.9	6.9	6.8	6.9	7.8	7.8	**7.8**	7.8	8.8	8.8	8.8	8.8	10.0	10.0	10.0	10.0
		HI PR	253	254	256	260	293	294	295	300	334	335	337	341	378	380	**381**	386	426	428	429	434	478	479	481	485
		LO PR	126	128	131	136	134	135	139	144	140	142	145	150	146	148	**151**	156	152	153	156	161	158	160	163	168
85	700	MBh	24.2	24.5	25.2	26.3	24.0	24.3	25.0	26.1	23.4	23.7	24.4	25.5	22.3	22.6	23.3	24.4	21.0	21.3	22.0	23.1	19.8	20.1	20.8	21.9
		S/T	1.00	0.89	0.74	0.59	1.00	0.89	0.75	0.60	1.00	1.00	0.78	0.63	1.00	1.00	0.80	0.65	1.00	1.00	0.82	0.67	1.00	1.00	1.00	0.72
		ΔT	30	28	25	22	30	28	25	22	30	28	25	22	30	28	25	21	29	28	25	21	30	29	26	22
		kW	1.41	1.41	1.40	1.42	1.57	1.57	1.57	1.58	1.76	1.76	1.76	1.77	1.96	1.96	1.96	1.97	2.18	2.18	2.18	2.19	2.45	2.45	2.44	2.45
		Amps	5.2	5.2	5.2	5.2	6.0	6.0	5.9	6.0	6.8	6.8	6.8	6.9	7.7	7.7	7.7	7.8	8.8	8.7	8.7	8.8	10.0	10.0	9.9	10.0
		HI PR	251	252	254	258	290	291	293	297	332	333	334	339	376	377	379	383	424	425	427	431	475	477	478	483
		LO PR	125	127	130	135	133	134	138	143	140	141	144	149	145	147	150	155	151	152	155	161	157	159	162	167
	800	MBh	24.5	24.8	25.5	26.6	24.2	24.6	25.3	26.4	23.6	24.0	24.7	25.7	22.5	22.9	23.6	24.7	21.2	21.6	22.3	23.4	20.0	20.4	21.1	22.2
		S/T	1.00	0.96	0.82	0.67	1.00	1.00	0.83	0.68	1.00	1.00	0.85	0.70	1.00	1.00	0.87	0.72	1.00	1.00	0.90	0.75	1.00	1.00	1.00	0.80
		ΔT	29	27	24	20	29	27	24	20	29	27	24	21	29	27	24	20	28	27	23	20	29	28	25	21
		kW	1.42	1.42	1.41	1.43	1.58	1.58	1.58	1.59	1.77	1.77	1.76	1.78	1.97	1.97	1.96	1.98	2.19	2.19	2.19	2.20	2.46	2.45	2.45	2.46
		Amps	5.2	5.2	5.2	5.3	6.0	6.0	6.0	6.0	6.9	6.8	6.8	6.9	7.8	7.8	7.8	7.8	8.8	8.8	8.8	8.8	10.0	10.0	10.0	10.0
		HI PR	253	254	256	260	292	293	295	300	334	335	337	341	378	379	381	385	426	427	429	433	478	479	480	485
		LO PR	127	129	132	137	135	136	139	144	141	143	146	151	147	148	151	157	152	154	157	162	159	161	164	169
	870	MBh	24.7	25.0	25.7	26.8	24.4	24.8	25.5	26.6	23.8	24.2	24.9	26.0	22.8	23.1	23.8	24.9	21.4	21.8	22.5	23.6	20.3	20.6	21.3	22.4
		S/T	1.00	1.00	0.86	0.71	1.00	1.00	0.86	0.71	1.00	1.00	0.89	0.74	1.00	1.00	0.91	0.76	1.00	1.00	0.93	0.78	1.00	1.00	1.00	0.84
		ΔT	28	26	23	20	28	26	23	20	28	26	23	20	28	26	23	20	28	26	23	20	29	27	24	21
		kW	1.42	1.42	1.42	1.43	1.59	1.59	1.58	1.60	1.77	1.77	1.77	1.78	1.97	1.97	1.97	1.98	2.20	2.20	2.19	2.21	2.46	2.46	2.46	2.47
		Amps	5.3	5.3	5.3	5.3	6.0	6.0	6.0	6.1	6.9	6.9	6.9	6.9	7.8	7.8	7.8	7.8	8.8	8.8	8.8	8.9	10.0	10.0	10.0	10.1
		HI PR	254	255	257	261	294	295	297	301	335	336	338	342	380	381	382	387	428	429	430	435	479	480	482	486
		LO PR	128	130	133	138	136	137	140	146	142	144	147	152	148	149	153	158	153	155	158	163	160	162	165	170

IDB: Entering Indoor Dry Bulb Temperature

Shaded area reflects AHRI Rating Conditions.

kW = Total system power

High and low pressures are measured at the liquid and suction service valves.

Amps = Outdoor unit amps (compressor + fan)

			Outdoor Ambient Temperature																							
			65ºF				75ºF				85ºF				95ºF				105ºF				115ºF			
			Entering Indoor Wet Bulb Temperature																							
IDB	Airflow		59	63	67	71	59	63	67	71	59	63	67	71	59	63	67	71	59	63	67	71	59	63	67	71
70	700	MBh	23.3	23.6	24.3	-	23.1	23.4	24.1	-	22.5	22.8	23.5	-	21.4	21.7	22.4	-	20.1	20.4	21.1	-	18.9	19.3	20.0	-
		S/T	0.61	0.52	0.38	-	0.61	0.53	0.39	-	0.64	0.56	0.41	-	0.66	0.58	0.43	-	1.00	0.60	0.46	-	1.00	0.66	0.51	-
		ΔT	64	58	47	-	64	58	47	-	64	59	48	-	64	58	47	-	63	57	46	-	66	61	50	-
		kW	1.46	1.45	1.45	-	1.62	1.62	1.62	-	1.81	1.80	1.80	-	2.01	2.00	2.00	-	2.23	2.23	2.23	-	2.49	2.49	2.49	-
		Amps	5.4	5.4	5.4	-	6.2	6.2	6.2	-	7.0	7.0	7.0	-	7.9	7.9	7.9	-	9.0	9.0	9.0	-	10.2	10.2	10.2	-
		Hi PR	242	243	245	-	280	281	283	-	321	322	323	-	364	365	367	-	410	411	413	-	460	461	463	-
		Lo PR	123	124	127	-	130	132	135	-	137	138	142	-	142	144	147	-	148	149	153	-	155	156	159	-
	800	MBh	23.5	23.9	24.6	-	23.3	23.7	24.4	-	22.7	23.0	23.7	-	21.7	22.0	22.7	-	20.4	20.7	21.4	-	19.2	19.5	20.2	-
		S/T	0.68	0.60	0.45	-	0.69	0.61	0.46	-	0.71	0.63	0.49	-	1.00	0.65	0.51	-	1.00	0.68	0.53	-	1.00	0.73	0.59	-
		ΔT	60	54	44	-	60	54	44	-	61	55	44	-	60	54	44	-	59	54	43	-	63	57	46	-
		kW	1.46	1.46	1.46	-	1.63	1.63	1.63	-	1.81	1.81	1.81	-	2.01	2.01	2.01	-	2.24	2.24	2.23	-	2.50	2.50	2.50	-
		Amps	5.5	5.5	5.5	-	6.2	6.2	6.2	-	7.1	7.1	7.1	-	8.0	8.0	8.0	-	9.0	9.0	9.0	-	10.2	10.2	10.2	-
		Hi PR	244	245	247	-	282	283	285	-	323	324	325	-	366	367	369	-	412	413	415	-	462	463	465	-
		Lo PR	124	126	129	-	132	133	137	-	139	140	143	-	144	146	149	-	150	151	154	-	156	158	161	-
	858	MBh	23.7	24.0	24.7	-	23.5	23.8	24.5	-	22.9	23.2	23.9	-	21.8	22.2	22.9	-	20.6	20.9	21.6	-	19.4	19.7	20.4	-
		S/T	0.71	0.63	0.49	-	0.72	0.64	0.49	-	0.75	0.66	0.52	-	1.00	0.69	0.54	-	1.00	0.71	0.56	-	1.00	0.76	0.62	-
		ΔT	58	53	42	-	58	53	42	-	59	53	43	-	58	52	42	-	57	52	41	-	61	55	45	-
		kW	1.47	1.47	1.46	-	1.63	1.63	1.63	-	1.82	1.82	1.82	-	2.02	2.02	2.02	-	2.24	2.24	2.24	-	2.50	2.50	2.50	-
		Amps	5.5	5.5	5.5	-	6.2	6.2	6.2	-	7.1	7.1	7.1	-	8.0	8.0	8.0	-	9.0	9.0	9.0	-	10.2	10.2	10.2	-
		Hi PR	245	246	248	-	283	284	286	-	324	325	326	-	367	368	370	-	414	415	416	-	463	464	466	-
		Lo PR	125	127	130	-	133	134	138	-	140	141	144	-	145	147	150	-	151	152	155	-	157	159	162	-
75	700	MBh	23.3	23.6	24.3	25.4	23.1	23.4	24.1	25.2	22.5	22.8	23.5	24.6	21.4	21.7	22.4	23.5	20.1	20.5	21.2	22.2	19.0	19.3	20.0	21.1
		S/T	0.74	0.66	0.52	0.36	0.75	0.67	0.52	0.37	1.00	0.70	0.55	0.40	1.00	0.72	0.57	0.42	1.00	0.74	0.60	0.44	1.00	1.00	0.65	0.50
		ΔT	76	71	60	49	76	70	60	49	77	71	61	50	76	70	60	49	75	70	59	48	79	73	63	52
		kW	1.45	1.45	1.45	1.46	1.62	1.62	1.62	1.63	1.80	1.80	1.80	1.81	2.00	2.00	2.00	2.01	2.23	2.23	2.22	2.24	2.49	2.49	2.49	2.50
		Amps	5.4	5.4	5.4	5.5	6.2	6.2	6.2	6.2	7.0	7.0	7.0	7.1	7.9	7.9	7.9	8.0	9.0	9.0	8.9	9.0	10.2	10.2	10.1	10.2
		Hi PR	242	243	245	249	281	282	283	288	321	322	323	328	364	365	367	371	411	412	413	418	460	461	463	467
		Lo PR	123	124	127	133	130	132	135	140	137	138	142	147	142	144	147	152	148	149	153	158	155	156	159	165
	800	MBh	23.5	23.9	24.6	25.6	23.3	23.7	24.4	25.4	22.7	23.1	23.8	24.8	21.7	22.0	22.7	23.8	20.4	20.7	21.4	22.5	19.2	19.5	20.2	21.3
		S/T	0.82	0.74	0.59	0.44	0.83	0.74	0.60	0.45	1.00	0.77	0.63	0.47	1.00	0.79	0.65	0.49	1.00	0.82	0.67	0.52	1.00	1.00	0.73	0.57
		ΔT	73	67	56	45	73	67	56	45	73	68	57	46	73	67	56	45	72	66	55	44	75	70	59	48
		kW	1.46	1.46	1.46	1.47	1.63	1.63	1.62	1.64	1.81	1.81	1.81	1.82	2.01	2.01	2.01	2.02	2.24	2.24	2.23	2.25	2.50	2.50	2.50	2.51
		Amps	5.5	5.5	5.4	5.5	6.2	6.2	6.2	6.3	7.1	7.1	7.1	7.1	8.0	8.0	8.0	8.0	9.0	9.0	9.0	9.0	10.2	10.2	10.2	10.2
		Hi PR	244	245	247	251	283	284	285	290	323	324	325	330	366	367	369	373	413	414	415	420	462	463	465	469
		Lo PR	124	126	129	134	132	133	137	142	139	140	143	148	144	146	149	154	150	151	154	160	156	158	161	166
	858	MBh	23.7	24.1	24.8	25.8	23.5	23.8	24.5	25.6	22.9	23.2	23.9	25.0	21.8	**22.2**	22.9	23.9	20.6	20.9	21.6	22.7	19.4	19.7	20.4	21.5
		S/T	0.85	0.77	0.62	0.47	0.86	0.78	0.63	0.48	1.00	0.80	0.66	0.50	1.00	**0.82**	0.68	0.53	1.00	0.85	0.70	0.55	1.00	1.00	0.76	0.60
		ΔT	71	65	55	44	71	65	54	43	72	66	55	44	71	**65**	54	43	70	64	54	43	74	68	57	46
		kW	1.47	1.47	1.46	1.48	1.63	1.63	1.63	1.64	1.82	1.82	1.81	1.83	2.02	**2.02**	2.01	2.03	2.24	2.24	2.24	2.25	2.50	2.50	2.50	2.51
		Amps	5.5	5.5	5.5	5.5	6.2	6.2	6.2	6.3	7.1	7.1	7.1	7.1	8.0	**8.0**	8.0	8.0	9.0	9.0	9.0	9.1	10.2	10.2	10.2	10.3
		Hi PR	245	246	248	252	284	285	286	291	324	325	327	331	367	**368**	370	374	414	415	417	421	464	465	466	471
		Lo PR	125	127	130	135	133	134	138	143	140	141	144	149	145	**147**	150	155	151	152	155	161	157	159	162	167

IDB: Entering Indoor Dry Bulb Temperature

High and low pressures are measured at the liquid and suction service valves.

Shaded area reflects ACCA (TVA) Rating Conditions.

kW = Total system power

Amps = Outdoor unit amps (compressor + fan)

			Outdoor Ambient Temperature																							
			65ºF				75ºF				85ºF				95ºF				105ºF				115ºF			
			Entering Indoor Wet Bulb Temperature																							
IDB	Airflow		59	63	67	71	59	63	67	71	59	63	67	71	59	63	67	71	59	63	67	71	59	63	67	71
80	700	MBh	23.4	23.7	24.4	25.5	23.2	23.5	24.2	25.3	22.6	22.9	23.6	24.7	21.5	21.9	22.6	23.6	20.2	20.6	21.3	22.3	19.1	19.4	20.1	21.2
		S/T	1.00	0.80	0.65	0.50	1.00	0.80	0.66	0.51	1.00	0.83	0.69	0.53	1.00	0.85	0.71	0.55	1.00	1.00	0.73	0.58	1.00	1.00	0.78	0.63
		ΔT	89	83	73	62	89	83	72	61	90	84	73	62	89	83	72	61	88	82	72	61	92	86	75	64
		kW	1.46	1.45	1.45	1.46	1.62	1.62	1.62	1.63	1.81	1.80	1.80	1.81	2.01	2.00	2.00	2.01	2.23	2.23	2.23	2.24	2.49	2.49	2.49	2.50
		Amps	5.4	5.4	5.4	5.5	6.2	6.2	6.2	6.2	7.0	7.0	7.0	7.1	7.9	7.9	7.9	8.0	9.0	9.0	9.0	9.0	10.2	10.2	10.2	10.2
		Hi PR	243	244	245	250	281	282	284	288	321	322	324	328	364	365	367	371	411	412	414	418	461	462	464	468
		Lo PR	123	125	128	133	131	132	136	141	137	139	142	147	143	145	148	153	148	150	153	158	155	157	160	165
	800	MBh	23.7	24.0	24.7	25.8	23.5	23.8	24.5	25.6	22.8	23.2	23.9	24.9	21.8	22.1	22.8	23.9	20.5	20.8	21.5	22.6	19.3	19.7	20.4	21.4
		S/T	1.00	0.87	0.73	0.57	1.00	0.88	0.73	0.58	1.00	0.91	0.76	0.61	1.00	1.00	0.78	0.63	1.00	1.00	0.80	0.65	1.00	1.00	0.86	0.71
		ΔT	85	80	69	58	85	80	69	58	86	80	70	59	85	80	69	58	84	79	68	57	88	82	72	61
		kW	1.46	1.46	1.46	1.47	1.63	1.63	1.63	1.64	1.81	1.81	1.81	1.82	2.01	2.01	2.01	2.02	2.24	2.24	2.23	2.25	2.50	2.50	2.50	2.51
		Amps	5.5	5.5	5.5	5.5	6.2	6.2	6.2	6.3	7.1	7.1	7.1	7.1	8.0	8.0	8.0	8.0	9.0	9.0	9.0	9.1	10.2	10.2	10.2	10.3
		Hi PR	245	246	247	252	283	284	286	290	323	324	326	330	366	367	369	373	413	414	416	420	463	464	466	470
		Lo PR	125	127	130	135	133	134	137	142	139	141	144	149	145	146	149	155	150	152	155	160	157	158	162	167
	858	MBh	23.8	24.2	24.9	25.9	23.6	24.0	24.7	25.7	23.0	23.4	24.1	25.1	22.0	22.3	**23.0**	24.1	20.7	21.0	21.7	22.8	19.5	19.8	20.5	21.6
		S/T	1.00	0.90	0.76	0.61	1.00	0.91	0.76	0.61	1.00	0.94	0.79	0.64	1.00	1.00	**0.81**	0.66	1.00	1.00	0.84	0.68	1.00	1.00	0.89	0.74
		ΔT	84	78	67	56	84	78	67	56	84	79	68	57	83	78	**67**	56	83	77	66	55	86	81	70	59
		kW	1.47	1.47	1.46	1.48	1.63	1.63	1.63	1.64	1.82	1.82	1.81	1.83	2.02	2.02	**2.01**	2.03	2.24	2.24	2.24	2.25	2.50	2.50	2.50	2.51
		Amps	5.5	5.5	5.5	5.5	6.2	6.2	6.2	6.3	7.1	7.1	7.1	7.1	8.0	8.0	**8.0**	8.0	9.0	9.0	9.0	9.1	10.2	10.2	10.2	10.3
		Hi PR	246	247	249	253	284	285	287	291	324	325	327	331	368	369	**370**	375	414	415	417	421	464	465	467	471
		Lo PR	126	128	131	136	134	135	138	143	140	142	145	150	146	147	**150**	156	151	153	156	161	158	159	163	168
85	700	MBh	23.8	24.1	24.8	25.9	23.6	23.9	24.6	25.7	23.0	23.3	24.0	25.1	21.9	22.3	23.0	24.0	20.6	21.0	21.7	22.7	19.5	19.8	20.5	21.6
		S/T	1.00	0.91	0.76	0.61	1.00	0.91	0.77	0.61	1.00	1.00	0.79	0.64	1.00	1.00	0.81	0.66	1.00	1.00	0.84	0.69	1.00	1.00	1.00	0.74
		ΔT	100	95	84	73	100	94	84	73	101	95	85	73	100	94	84	73	99	94	83	72	103	97	86	75
		kW	1.46	1.46	1.45	1.47	1.62	1.62	1.62	1.63	1.81	1.81	1.80	1.82	2.01	2.01	2.00	2.02	2.23	2.23	2.23	2.24	2.49	2.49	2.49	2.50
		Amps	5.4	5.4	5.4	5.5	6.2	6.2	6.2	6.2	7.0	7.0	7.0	7.1	8.0	8.0	7.9	8.0	9.0	9.0	9.0	9.0	10.2	10.2	10.2	10.2
		Hi PR	244	245	247	251	282	283	285	289	322	323	325	329	366	367	368	373	412	413	415	419	462	463	465	469
		Lo PR	125	127	130	135	133	134	137	143	139	141	144	149	145	146	150	155	150	152	155	160	157	159	162	167
	800	MBh	24.1	24.4	25.1	26.2	23.9	24.2	24.9	26.0	23.2	23.6	24.3	25.3	22.2	22.5	23.2	24.3	20.9	21.2	21.9	23.0	19.7	20.1	20.8	21.8
		S/T	1.00	0.98	0.84	0.68	1.00	1.00	0.84	0.69	1.00	1.00	0.87	0.72	1.00	1.00	0.89	0.74	1.00	1.00	0.91	0.76	1.00	1.00	1.00	0.82
		ΔT	97	91	80	69	97	91	80	69	97	92	81	70	96	91	80	69	96	90	79	68	99	94	83	72
		kW	1.47	1.47	1.46	1.48	1.63	1.63	1.63	1.64	1.82	1.82	1.81	1.83	2.02	2.02	2.01	2.03	2.24	2.24	2.24	2.25	2.50	2.50	2.50	2.51
		Amps	5.5	5.5	5.5	5.5	6.2	6.2	6.2	6.3	7.1	7.1	7.1	7.1	8.0	8.0	8.0	8.0	9.0	9.0	9.0	9.1	10.2	10.2	10.2	10.3
		Hi PR	246	247	249	253	284	285	287	291	324	325	327	331	368	369	370	375	414	415	417	421	464	465	467	471
		Lo PR	127	128	132	137	134	136	139	144	141	142	146	151	147	148	151	156	152	153	157	162	159	160	163	169
	858	MBh	24.2	24.6	25.3	26.3	24.0	24.4	25.1	26.1	23.4	23.7	24.4	25.5	22.4	22.7	23.4	24.5	21.1	21.4	22.1	23.2	19.9	20.2	20.9	22.0
		S/T	1.00	1.00	0.87	0.71	1.00	1.00	0.87	0.72	1.00	1.00	0.90	0.75	1.00	1.00	0.92	0.77	1.00	1.00	0.94	0.79	1.00	1.00	1.00	0.85
		ΔT	95	89	78	67	95	89	78	67	96	90	79	68	95	89	78	67	94	88	78	66	98	92	81	70
		kW	1.47	1.47	1.47	1.48	1.64	1.64	1.63	1.65	1.82	1.82	1.82	1.83	2.02	2.02	2.02	2.03	2.25	2.24	2.24	2.25	2.51	2.51	2.50	2.52
		Amps	5.5	5.5	5.5	5.5	6.3	6.3	6.2	6.3	7.1	7.1	7.1	7.1	8.0	8.0	8.0	8.1	9.0	9.0	9.0	9.1	10.2	10.2	10.2	10.3
		Hi PR	247	248	250	254	285	286	288	292	325	326	328	332	369	370	371	376	415	416	418	422	465	466	468	472
		Lo PR	128	129	133	138	135	137	140	145	142	143	147	152	148	149	152	157	153	155	158	163	160	161	164	170

IDB: Entering Indoor Dry Bulb Temperature

High and low pressures are measured at the liquid and suction service valves.

Shaded area reflects AHRI Rating Conditions.

kW = Total system power

Amps = Outdoor unit amps (compressor + fan)

Expanded Cooling Data — GSZ140301K* + ARUF29B14** + TXV

			Outdoor Ambient Temperature																							
			65ºF				75ºF				85ºF				95ºF				105ºF				115ºF			
			Entering Indoor Wet Bulb Temperature																							
IDB	Airflow		59	63	67	71	59	63	67	71	59	63	67	71	59	63	67	71	59	63	67	71	59	63	67	71
70	870	MBh	28.4	28.8	29.7	-	28.2	28.6	29.4	-	27.5	27.9	28.7	-	26.2	26.6	27.4	-	24.7	25.1	25.9	-	23.3	23.6	24.5	-
		S/T	0.65	0.57	0.44	-	0.66	0.58	0.45	-	0.68	0.61	0.47	-	0.70	0.62	0.49	-	0.72	0.65	0.51	-	1.00	0.70	0.56	-
		ΔT	19	17	13	-	19	17	13	-	19	17	14	-	19	17	13	-	18	17	13	-	20	18	14	-
		kW	1.69	1.69	1.68	-	1.89	1.89	1.89	-	2.12	2.11	2.11	-	2.36	2.36	2.35	-	2.63	2.63	2.63	-	2.95	2.95	2.95	-
		Amps	6.5	6.5	6.5	-	7.5	7.5	7.4	-	8.5	8.5	8.5	-	9.6	9.6	9.6	-	10.9	10.9	10.8	-	12.3	12.3	12.3	-
		HI PR	250	251	253	-	289	290	292	-	330	331	333	-	374	375	377	-	422	423	425	-	473	474	475	-
		LO PR	118	120	123	-	125	127	130	-	131	133	136	-	137	138	141	-	142	143	146	-	148	150	153	-
	1000	MBh	29.0	29.4	30.2	-	28.7	29.1	30.0	-	28.0	28.4	29.2	-	26.7	27.1	28.0	-	25.2	25.6	26.4	-	23.8	24.2	25.0	-
		S/T	0.69	0.61	0.48	-	0.69	0.62	0.49	-	0.72	0.64	0.51	-	0.74	0.66	0.53	-	1.00	0.68	0.55	-	1.00	0.73	0.60	-
		ΔT	18	16	12	-	18	16	12	-	18	16	13	-	18	16	12	-	17	15	12	-	18	17	13	-
		kW	1.70	1.70	1.69	-	1.90	1.90	1.90	-	2.13	2.12	2.12	-	2.37	2.37	2.36	-	2.64	2.64	2.64	-	2.96	2.96	2.96	-
		Amps	6.6	6.6	6.6	-	7.5	7.5	7.5	-	8.5	8.5	8.5	-	9.7	9.7	9.6	-	10.9	10.9	10.9	-	12.4	12.4	12.4	-
		HI PR	252	254	255	-	292	293	294	-	333	334	335	-	377	378	380	-	424	425	427	-	475	476	478	-
		LO PR	120	122	125	-	128	129	132	-	134	135	138	-	139	140	143	-	144	146	149	-	151	152	155	-
	1125	MBh	29.6	30.0	30.9	-	29.4	29.8	30.6	-	28.6	29.0	29.9	-	27.4	27.8	28.6	-	25.8	26.2	27.1	-	24.4	24.8	25.7	-
		S/T	0.69	0.62	0.49	-	0.70	0.62	0.49	-	0.72	0.65	0.52	-	0.74	0.67	0.54	-	1.00	0.69	0.56	-	1.00	0.74	0.61	-
		ΔT	17	15	11	-	17	15	11	-	17	15	12	-	17	15	11	-	16	15	11	-	17	16	12	-
		kW	1.71	1.71	1.70	-	1.91	1.91	1.90	-	2.13	2.13	2.13	-	2.38	2.38	2.37	-	2.65	2.65	2.65	-	2.97	2.97	2.97	-
		Amps	6.6	6.6	6.6	-	7.6	7.6	7.5	-	8.6	8.6	8.6	-	9.7	9.7	9.7	-	11.0	10.9	10.9	-	12.4	12.4	12.4	-
		HI PR	255	256	258	-	294	295	297	-	335	336	338	-	379	380	382	-	427	428	430	-	478	479	480	-
		LO PR	123	124	127	-	130	132	134	-	136	138	141	-	142	143	146	-	147	148	151	-	153	155	158	-
75	870	MBh	28.5	28.9	29.7	31.0	28.2	28.6	29.4	30.7	27.5	27.9	28.7	30.0	26.2	**26.6**	27.5	28.7	24.7	25.1	25.9	27.2	23.3	23.7	24.5	25.8
		S/T	0.77	0.70	0.57	0.43	0.78	0.71	0.57	0.44	0.81	0.73	0.60	0.46	1.00	**0.75**	0.62	0.48	1.00	0.77	0.64	0.50	1.00	0.82	0.69	0.55
		ΔT	23	21	17	14	23	21	17	14	23	21	18	14	23	**21**	17	14	22	21	17	14	24	22	18	15
		kW	1.69	1.69	1.68	1.70	1.89	1.89	1.88	1.90	2.11	2.11	2.11	2.12	2.36	**2.36**	2.35	2.37	2.63	2.63	2.63	2.64	2.95	2.95	2.95	2.96
		Amps	6.5	6.5	6.5	6.6	7.5	7.5	7.4	7.5	8.5	8.5	8.5	8.5	9.6	**9.6**	9.6	9.7	10.9	10.9	10.8	10.9	12.3	12.3	12.3	12.4
		HI PR	250	251	253	257	289	290	292	297	330	331	333	337	374	**376**	377	382	422	423	425	429	473	474	476	480
		LO PR	118	120	123	128	125	127	130	135	131	133	136	141	137	**138**	141	146	142	143	146	151	148	150	153	158
	1000	MBh	29.0	29.4	30.2	31.5	28.8	29.1	30.0	31.3	28.0	28.4	29.3	30.5	26.8	**27.2**	28.0	29.3	25.2	25.6	26.5	27.7	23.8	24.2	25.0	26.3
		S/T	0.81	0.74	0.61	0.47	0.82	0.74	0.61	0.47	1.00	0.77	0.64	0.50	1.00	**0.79**	0.65	0.52	1.00	0.81	0.68	0.54	1.00	0.86	0.73	0.59
		ΔT	22	20	16	13	22	20	16	13	22	20	17	13	22	**20**	16	13	21	19	16	13	22	21	17	14
		kW	1.70	1.70	1.69	1.71	1.90	1.90	1.89	1.91	2.12	2.12	2.12	2.14	2.37	**2.37**	2.36	2.38	2.64	2.64	2.64	2.65	2.96	2.96	2.96	2.97
		Amps	6.6	6.6	6.6	6.6	7.5	7.5	7.5	7.6	8.5	8.5	8.5	8.6	9.7	**9.7**	9.6	9.7	10.9	10.9	10.9	11.0	12.4	12.4	12.3	12.4
		HI PR	253	254	256	260	292	293	295	299	333	334	336	340	377	**378**	380	384	425	426	427	432	475	476	478	482
		LO PR	120	122	125	130	128	129	132	137	134	135	138	143	139	**140**	143	148	144	146	149	153	151	152	155	160
	1125	MBh	29.6	30.0	30.9	32.2	29.4	29.8	30.6	31.9	28.7	29.1	29.9	31.2	27.4	**27.8**	28.6	29.9	25.9	26.3	27.1	28.4	24.5	24.8	25.7	27.0
		S/T	0.82	0.74	0.61	0.47	0.82	0.75	0.62	0.48	1.00	0.77	0.64	0.50	1.00	**0.79**	0.66	0.52	1.00	0.81	0.68	0.54	1.00	0.86	0.73	0.59
		ΔT	21	19	15	12	21	19	15	12	21	19	16	12	21	**19**	15	12	20	19	15	12	22	20	16	13
		kW	1.71	1.70	1.70	1.72	1.91	1.91	1.90	1.92	2.13	2.13	2.13	2.14	2.38	**2.38**	2.37	2.39	2.65	2.65	2.64	2.66	2.97	2.97	2.96	2.98
		Amps	6.6	6.6	6.6	6.7	7.6	7.5	7.5	7.6	8.6	8.6	8.6	8.6	9.7	**9.7**	9.7	9.7	10.9	10.9	10.9	11.0	12.4	12.4	12.4	12.5
		HI PR	255	256	258	262	294	295	297	301	335	336	338	342	379	**380**	382	387	427	428	430	434	478	479	481	485
		LO PR	123	124	127	132	130	132	135	139	136	138	141	146	142	**143**	146	151	147	148	151	156	153	155	158	163

IDB: Entering Indoor Dry Bulb Temperature

High and low pressures are measured at the liquid and suction service valves.

Shaded area reflects ACCA (TVA) Rating Conditions.

kW = Total system power

Amps = Outdoor unit amps (compressor + fan)

			Outdoor Ambient Temperature																							
			65ºF				75ºF				85ºF				95ºF				105ºF				115ºF			
			Entering Indoor Wet Bulb Temperature																							
IDB	Airflow		59	63	67	71	59	63	67	71	59	63	67	71	59	63	67	71	59	63	67	71	59	63	67	71
80	870	MBh	28.6	29.0	29.8	31.1	28.4	28.8	29.6	30.9	27.6	28.0	28.9	30.1	26.4	26.8	**27.6**	28.9	24.8	25.2	26.1	27.3	23.4	23.8	24.7	25.9
		S/T	0.90	0.82	0.69	0.55	1.00	0.83	0.70	0.56	1.00	0.85	0.72	0.58	1.00	0.87	**0.74**	0.60	1.00	0.89	0.76	0.62	1.00	1.00	0.81	0.67
		ΔT	27	25	22	18	27	25	21	18	27	25	22	18	27	25	**21**	18	26	25	21	18	28	26	22	19
		kW	1.69	1.69	1.68	1.70	1.89	1.89	1.88	1.90	2.12	2.11	2.11	2.13	2.36	2.36	**2.35**	2.37	2.63	2.63	2.63	2.64	2.95	2.95	2.95	2.96
		Amps	6.5	6.5	6.5	6.6	7.5	7.5	7.4	7.5	8.5	8.5	8.5	8.5	9.6	9.6	**9.6**	9.7	10.9	10.9	10.8	10.9	12.3	12.3	12.3	12.4
		HI PR	251	252	254	258	290	291	293	297	331	332	334	338	375	376	**378**	382	423	424	425	430	473	474	476	480
		LO PR	119	120	123	128	126	127	130	135	132	133	136	141	137	139	**142**	147	142	144	147	152	149	150	153	158
	1000	MBh	29.2	29.5	30.4	31.7	28.9	29.3	30.1	31.4	28.2	28.6	29.4	30.7	26.9	27.3	28.1	29.4	25.4	25.8	26.6	27.9	24.0	24.4	25.2	26.5
		S/T	0.93	0.86	0.73	0.59	1.00	0.87	0.73	0.59	1.00	0.89	0.76	0.62	1.00	0.91	0.78	0.64	1.00	1.00	0.80	0.66	1.00	1.00	0.85	0.71
		ΔT	26	24	20	17	26	24	20	17	26	24	21	17	26	24	20	17	25	24	20	17	27	25	21	18
		kW	1.70	1.70	1.69	1.71	1.90	1.90	1.90	1.91	2.13	2.12	2.12	2.14	2.37	2.37	2.36	2.38	2.64	2.64	2.64	2.65	2.96	2.96	2.96	2.97
		Amps	6.6	6.6	6.6	6.6	7.5	7.5	7.5	7.6	8.5	8.5	8.5	8.6	9.7	9.7	9.6	9.7	10.9	10.9	10.9	11.0	12.4	12.4	12.4	12.4
		HI PR	253	254	256	260	292	293	295	299	333	334	336	340	377	378	380	385	425	426	428	432	476	477	479	483
		LO PR	121	122	125	130	128	129	132	137	134	136	139	144	139	141	144	149	145	146	149	154	151	153	155	160
	1125	MBh	29.8	30.2	31.0	32.3	29.5	29.9	30.8	32.1	28.8	29.2	30.0	31.3	27.5	27.9	28.8	30.1	26.0	26.4	27.2	28.5	24.6	25.0	25.8	27.1
		S/T	1.00	0.87	0.73	0.59	1.00	0.87	0.74	0.60	1.00	0.90	0.76	0.63	1.00	0.92	0.78	0.64	1.00	1.00	0.80	0.67	1.00	1.00	0.86	0.72
		ΔT	25	23	19	16	25	23	19	16	25	23	20	16	25	23	19	16	24	23	19	16	26	24	20	17
		kW	1.71	1.71	1.70	1.72	1.91	1.91	1.90	1.92	2.13	2.13	2.13	2.14	2.38	2.38	2.37	2.39	2.65	2.65	2.65	2.66	2.97	2.97	2.97	2.98
		Amps	6.6	6.6	6.6	6.7	7.6	7.5	7.5	7.6	8.6	8.6	8.6	8.6	9.7	9.7	9.7	9.8	11.0	10.9	10.9	11.0	12.4	12.4	12.4	12.5
		HI PR	256	257	258	263	295	296	298	302	336	337	339	343	380	381	383	387	427	428	430	435	478	479	481	485
		LO PR	124	125	128	133	131	132	135	140	137	138	141	146	142	144	146	151	147	149	152	157	154	155	158	163
85	870	MBh	29.1	29.5	30.3	31.6	28.8	29.2	30.1	31.3	28.1	28.5	29.3	30.6	26.8	27.2	28.1	29.4	25.3	25.7	26.5	27.8	23.9	24.3	25.1	26.4
		S/T	1.00	0.92	0.79	0.65	1.00	0.93	0.80	0.66	1.00	0.95	0.82	0.68	1.00	1.00	0.84	0.70	1.00	1.00	0.86	0.72	1.00	1.00	0.91	0.77
		ΔT	30	29	25	22	30	28	25	22	31	29	25	22	30	28	25	22	30	28	25	21	31	29	26	22
		kW	1.69	1.69	1.69	1.70	1.89	1.89	1.89	1.90	2.12	2.12	2.11	2.13	2.36	2.36	2.36	2.37	2.64	2.63	2.63	2.65	2.96	2.95	2.95	2.97
		Amps	6.6	6.6	6.5	6.6	7.5	7.5	7.5	7.5	8.5	8.5	8.5	8.6	9.6	9.6	9.6	9.7	10.9	10.9	10.9	10.9	12.3	12.3	12.3	12.4
		HI PR	252	253	255	259	291	292	294	298	332	333	335	339	376	377	379	383	424	425	427	431	474	476	477	482
		LO PR	120	122	125	130	127	129	132	137	134	135	138	143	139	140	143	148	144	146	148	153	151	152	155	160
	1000	MBh	29.6	30.0	30.9	32.1	29.4	29.8	30.6	31.9	28.6	29.0	29.9	31.2	27.4	27.8	28.6	29.9	25.8	26.2	27.1	28.4	24.4	24.8	25.7	26.9
		S/T	1.00	0.96	0.83	0.69	1.00	0.96	0.83	0.69	1.00	1.00	0.86	0.72	1.00	1.00	0.88	0.74	1.00	1.00	0.90	0.76	1.00	1.00	0.95	0.81
		ΔT	29	27	24	20	29	27	24	20	29	28	24	21	29	27	24	20	29	27	24	20	30	28	25	21
		kW	1.70	1.70	1.70	1.71	1.90	1.90	1.90	1.91	2.13	2.13	2.12	2.14	2.37	2.37	2.37	2.38	2.65	2.64	2.64	2.66	2.97	2.96	2.96	2.98
		Amps	6.6	6.6	6.6	6.7	7.5	7.5	7.5	7.6	8.6	8.6	8.5	8.6	9.7	9.7	9.7	9.7	10.9	10.9	10.9	11.0	12.4	12.4	12.4	12.4
		HI PR	254	255	257	261	293	295	296	301	334	335	337	342	379	380	381	386	426	427	429	433	477	478	480	484
		LO PR	123	124	127	132	130	131	134	139	136	137	140	145	141	143	146	151	146	148	151	156	153	154	157	162
	1125	MBh	30.3	30.7	31.5	32.8	30.0	30.4	31.2	32.5	29.3	29.7	30.5	31.8	28.0	28.4	29.3	30.5	26.5	26.9	27.7	29.0	25.1	25.5	26.3	27.6
		S/T	1.00	0.96	0.83	0.69	1.00	0.97	0.84	0.70	1.00	1.00	0.86	0.72	1.00	1.00	0.88	0.74	1.00	1.00	0.90	0.76	1.00	1.00	1.00	0.81
		ΔT	28	27	23	20	28	26	23	19	29	27	23	20	28	26	23	19	28	26	23	19	29	27	24	20
		kW	1.71	1.71	1.71	1.72	1.91	1.91	1.91	1.92	2.14	2.14	2.13	2.15	2.38	2.38	2.38	2.39	2.65	2.65	2.65	2.67	2.97	2.97	2.97	2.98
		Amps	6.7	6.6	6.6	6.7	7.6	7.6	7.6	7.6	8.6	8.6	8.6	8.7	9.7	9.7	9.7	9.8	11.0	11.0	10.9	11.0	12.4	12.4	12.4	12.5
		HI PR	257	258	260	264	296	297	299	303	337	338	340	344	381	382	384	388	429	430	431	436	479	480	482	486
		LO PR	125	127	130	135	132	134	137	142	139	140	143	148	144	145	148	153	149	150	153	158	155	157	160	165

IDB: Entering Indoor Dry Bulb Temperature

High and low pressures are measured at the liquid and suction service valves.

Shaded area reflects AHRI Rating Conditions.

kW = Total system power

Amps = Outdoor unit amps (compressor + fan)

			Outdoor Ambient Temperature																							
			65ºF				75ºF				85ºF				95ºF				105ºF				115ºF			
			Entering Indoor Wet Bulb Temperature																							
IDB	Airflow		59	63	67	71	59	63	67	71	59	63	67	71	59	63	67	71	59	63	67	71	59	63	67	71
70	870	MBh	28.9	29.3	30.1	-	28.6	29.0	29.9	-	27.9	28.3	29.1	-	26.6	27.0	27.8	-	25.0	25.4	26.3	-	23.6	24.0	24.8	-
		S/T	0.65	0.57	0.44	-	0.65	0.58	0.45	-	0.68	0.60	0.47	-	0.70	0.62	0.49	-	0.72	0.65	0.51	-	1.00	0.70	0.56	-
		ΔT	19.01	17.15	13.67	-	18.96	17.10	13.62	-	19.22	17.36	13.88	-	18.94	17.08	13.60	-	18.69	16.83	13.35	-	19.86	18.00	14.52	-
		kW	1.73	1.73	1.72	-	1.92	1.92	1.91	-	2.13	2.13	2.12	-	2.36	2.35	2.35	-	2.61	2.61	2.61	-	2.91	2.91	2.90	-
		Amps	6.63	6.62	6.61	-	7.49	7.49	7.47	-	8.46	8.45	8.43	-	9.50	9.49	9.48	-	10.66	10.66	10.64	-	12.03	12.02	12.01	-
		HI PR	242	243	244	-	280	281	282	-	319	320	322	-	362	363	365	-	408	409	411	-	457	458	460	-
		LO PR	118	119	122	-	125	126	129	-	131	133	136	-	136	138	141	-	142	143	146	-	148	149	152	-
	1000	MBh	29.4	29.8	30.7	-	29.2	29.6	30.4	-	28.4	28.8	29.7	-	27.1	27.5	28.4	-	25.6	26.0	26.8	-	24.1	24.5	25.4	-
		S/T	0.69	0.61	0.48	-	0.69	0.62	0.49	-	0.72	0.64	0.51	-	0.73	0.66	0.53	-	1.00	0.68	0.55	-	1.00	0.73	0.60	-
		ΔT	17.89	16.03	12.55	-	17.84	15.98	12.50	-	18.10	16.24	12.76	-	17.82	15.96	12.48	-	17.57	15.71	12.23	-	18.74	16.88	13.40	-
		kW	1.74	1.74	1.73	-	1.93	1.93	1.92	-	2.14	2.14	2.13	-	2.36	2.36	2.36	-	2.62	2.62	2.61	-	2.92	2.92	2.91	-
		Amps	6.67	6.67	6.65	-	7.54	7.53	7.51	-	8.50	8.49	8.48	-	9.54	9.54	9.52	-	10.71	10.70	10.69	-	12.07	12.07	12.05	-
		HI PR	244	245	247	-	282	283	285	-	321	323	324	-	364	365	367	-	410	411	413	-	459	460	462	-
		LO PR	120	122	125	-	127	129	132	-	133	135	138	-	139	140	143	-	144	145	148	-	150	152	155	-
	1125	MBh	30.1	30.5	31.3	-	29.8	30.2	31.1	-	29.1	29.5	30.3	-	27.8	28.2	29.0	-	26.2	26.6	27.5	-	24.8	25.2	26.0	-
		S/T	0.69	0.62	0.49	-	0.70	0.62	0.49	-	0.72	0.65	0.52	-	0.74	0.67	0.53	-	1.00	0.69	0.56	-	1.00	0.74	0.61	-
		ΔT	16.95	15.09	11.61	-	16.90	15.04	11.56	-	17.16	15.30	11.82	-	16.88	15.02	11.54	-	16.63	14.77	11.29	-	17.80	15.93	12.46	-
		kW	1.75	1.74	1.74	-	1.93	1.93	1.93	-	2.15	2.14	2.14	-	2.37	2.37	2.37	-	2.63	2.63	2.62	-	2.93	2.92	2.92	-
		Amps	6.71	6.70	6.69	-	7.57	7.57	7.55	-	8.54	8.53	8.52	-	9.58	9.57	9.56	-	10.74	10.74	10.72	-	12.11	12.10	12.09	-
		HI PR	246	247	249	-	284	285	287	-	324	325	327	-	367	368	369	-	413	414	415	-	462	463	464	-
		LO PR	123	124	127	-	130	131	134	-	136	137	140	-	141	143	146	-	146	148	151	-	153	154	157	-
75	870	MBh	28.9	29.3	30.1	31.4	28.6	29.0	29.9	31.2	27.9	28.3	29.1	30.4	26.6	**27.0**	27.9	29.2	25.0	25.4	26.3	27.6	23.6	24.0	24.9	26.2
		S/T	0.77	0.70	0.57	0.43	0.78	0.71	0.57	0.43	0.80	0.73	0.60	0.46	1.00	**0.75**	0.62	0.48	1.00	0.77	0.64	0.50	1.00	0.82	0.69	0.55
		ΔT	23	21	18	14	23	21	18	14	23	21	18	14	23	**21**	18	14	23	21	17	14	24	22	19	15
		kW	1.73	1.73	1.72	1.74	1.92	1.91	1.91	1.93	2.13	2.12	2.12	2.14	2.35	**2.35**	2.35	2.36	2.61	2.61	2.60	2.62	2.91	2.91	2.90	2.92
		Amps	6.6	6.6	6.6	6.7	7.5	7.5	7.5	7.5	8.4	8.4	8.4	8.5	9.5	**9.5**	9.5	9.5	10.7	10.7	10.6	10.7	12.0	12.0	12.0	12.1
		HI PR	242	243	245	249	280	281	282	287	319	320	322	326	362	**363**	365	369	408	409	411	415	457	458	460	464
		LO PR	118	119	122	127	125	126	129	134	131	133	136	140	136	**138**	141	146	142	143	146	151	148	149	152	157
	1000	MBh	29.4	29.8	30.7	32.0	29.2	29.6	30.4	31.7	28.4	28.8	29.7	31.0	27.1	27.5	28.4	29.7	25.6	26.0	26.8	28.1	24.2	24.6	25.4	26.7
		S/T	0.81	0.74	0.60	0.47	0.82	0.74	0.61	0.47	1.00	0.77	0.64	0.50	1.00	0.79	0.65	0.51	1.00	0.81	0.68	0.54	1.00	0.86	0.73	0.59
		ΔT	22	20	17	13	22	20	17	13	22	20	17	13	22	20	17	13	22	20	16	13	23	21	17	14
		kW	1.74	1.74	1.73	1.75	1.93	1.92	1.92	1.94	2.14	2.13	2.13	2.15	2.36	2.36	2.36	2.37	2.62	2.62	2.61	2.63	2.92	2.92	2.91	2.93
		Amps	6.7	6.7	6.6	6.7	7.5	7.5	7.5	7.6	8.5	8.5	8.5	8.5	9.5	9.5	9.5	9.6	10.7	10.7	10.7	10.7	12.1	12.1	12.0	12.1
		HI PR	244	245	247	251	282	283	285	289	322	323	324	329	364	365	367	371	410	411	413	417	459	460	462	466
		LO PR	120	122	125	130	127	129	132	137	133	135	138	143	139	140	143	148	144	145	148	153	150	152	155	160
	1125	MBh	30.1	30.5	31.3	32.6	29.8	30.2	31.1	32.4	29.1	29.5	30.3	31.6	27.8	28.2	29.1	30.4	26.2	26.6	27.5	28.8	24.8	25.2	26.1	27.4
		S/T	0.82	0.74	0.61	0.47	0.82	0.75	0.62	0.48	1.00	0.77	0.64	0.50	1.00	0.79	0.66	0.52	1.00	0.81	0.68	0.54	1.00	0.86	0.73	0.59
		ΔT	21	19	16	12	21	19	16	12	21	19	16	12	21	19	16	12	21	19	15	12	22	20	17	13
		kW	1.75	1.74	1.74	1.75	1.93	1.93	1.93	1.94	2.14	2.14	2.14	2.15	2.37	2.37	2.37	2.38	2.63	2.62	2.62	2.64	2.92	2.92	2.92	2.93
		Amps	6.7	6.7	6.7	6.7	7.6	7.6	7.5	7.6	8.5	8.5	8.5	8.6	9.6	9.6	9.6	9.6	10.7	10.7	10.7	10.8	12.1	12.1	12.1	12.1
		HI PR	247	248	249	254	284	285	287	291	324	325	327	331	367	368	369	374	413	414	415	420	462	463	465	469
		LO PR	123	124	127	132	130	131	134	139	136	137	140	145	141	143	146	151	146	148	151	156	153	154	157	162

IDB: Entering Indoor Dry Bulb Temperature
High and low pressures are measured at the liquid and suction service valves.

Shaded area reflects ACCA (TVA) Rating Conditions.

kW = Total system power
Amps = Outdoor unit amps (compressor + fan)

			Outdoor Ambient Temperature																							
			65ºF				75ºF				85ºF				95ºF				105ºF				115ºF			
			Entering Indoor Wet Bulb Temperature																							
IDB	Airflow		59	63	67	71	59	63	67	71	59	63	67	71	59	63	67	71	59	63	67	71	59	63	67	71
80	870	MBh	29.0	29.4	30.3	31.6	28.8	29.2	30.0	31.3	28.0	28.4	29.3	30.6	26.7	27.1	**28.0**	29.3	25.2	25.6	26.4	27.7	23.8	24.2	25.0	26.3
		S/T	0.90	0.82	0.69	0.55	1.00	0.83	0.70	0.56	1.00	0.85	0.72	0.58	1.00	0.87	**0.74**	0.60	1.00	0.89	0.76	0.62	1.00	1.00	0.81	0.67
		ΔT	27	25	22	18	27	25	22	18	27	26	22	18	27	25	**22**	18	27	25	22	18	28	26	23	19
		kW	1.73	1.73	1.72	1.74	1.92	1.92	1.91	1.93	2.13	2.13	2.12	2.14	2.36	2.35	**2.35**	2.36	2.61	2.61	2.60	2.62	2.91	2.91	2.90	2.92
		Amps	6.6	6.6	6.6	6.7	7.5	7.5	7.5	7.5	8.5	8.4	8.4	8.5	9.5	9.5	**9.5**	9.5	10.7	10.7	10.6	10.7	12.0	12.0	12.0	12.1
		HI PR	242	243	245	249	280	281	283	287	320	321	323	327	362	363	**365**	369	408	409	411	415	458	459	460	464
		LO PR	118	120	123	128	125	127	130	135	132	133	136	141	137	138	**141**	146	142	143	146	151	148	150	153	158
	1000	MBh	29.6	30.0	30.8	32.1	29.3	29.7	30.6	31.9	28.6	29.0	29.8	31.1	27.3	27.7	28.5	29.8	25.7	26.1	27.0	28.3	24.3	24.7	25.6	26.9
		S/T	0.93	0.86	0.73	0.59	1.00	0.86	0.73	0.59	1.00	0.89	0.76	0.62	1.00	0.91	0.78	0.64	1.00	1.00	0.80	0.66	1.00	1.00	0.85	0.71
		ΔT	26	24	21	17	26	24	21	17	26	24	21	17	26	24	21	17	26	24	20	17	27	25	22	18
		kW	1.74	1.74	1.73	1.75	1.93	1.92	1.92	1.94	2.14	2.14	2.13	2.15	2.36	2.36	2.36	2.37	2.62	2.62	2.61	2.63	2.92	2.92	2.91	2.93
		Amps	6.7	6.7	6.7	6.7	7.5	7.5	7.5	7.6	8.5	8.5	8.5	8.5	9.5	9.5	9.5	9.6	10.7	10.7	10.7	10.8	12.1	12.1	12.1	12.1
		HI PR	245	246	247	252	283	284	285	289	322	323	325	329	365	366	368	372	411	412	414	418	460	461	463	467
		LO PR	121	122	125	130	128	129	132	137	134	135	138	143	139	141	144	149	144	146	149	154	151	152	155	160
	1125	MBh	30.2	30.6	31.5	32.8	30.0	30.4	31.2	32.5	29.2	29.6	30.5	31.8	27.9	28.3	29.2	30.5	26.4	26.8	27.6	28.9	25.0	25.4	26.2	27.5
		S/T	1.00	0.86	0.73	0.59	1.00	0.87	0.74	0.60	1.00	0.90	0.76	0.62	1.00	0.91	0.78	0.64	1.00	1.00	0.80	0.66	1.00	1.00	0.85	0.71
		ΔT	25	23	20	16	25	23	20	16	25	24	20	16	25	23	20	16	25	23	20	16	26	24	21	17
		kW	1.75	1.74	1.74	1.76	1.93	1.93	1.93	1.94	2.15	2.14	2.14	2.15	2.37	2.37	2.37	2.38	2.63	2.63	2.62	2.64	2.93	2.92	2.92	2.94
		Amps	6.7	6.7	6.7	6.8	7.6	7.6	7.6	7.6	8.5	8.5	8.5	8.6	9.6	9.6	9.6	9.6	10.7	10.7	10.7	10.8	12.1	12.1	12.1	12.2
		HI PR	247	248	250	254	285	286	288	292	325	326	327	331	367	368	370	374	413	414	416	420	462	463	465	469
		LO PR	123	125	128	133	130	132	135	140	137	138	141	146	142	143	146	151	147	148	151	156	153	155	158	163
85	870	MBh	29.5	29.9	30.8	32.1	29.3	29.7	30.5	31.8	28.5	28.9	29.8	31.1	27.2	27.6	28.5	29.8	25.7	26.1	26.9	28.2	24.2	24.6	25.5	26.8
		S/T	1.00	0.92	0.79	0.65	1.00	0.93	0.79	0.66	1.00	0.95	0.82	0.68	1.00	1.00	0.84	0.70	1.00	1.00	0.86	0.72	1.00	1.00	0.91	0.77
		ΔT	31	29	26	22	31	29	25	22	31	29	26	22	31	29	25	22	31	29	25	22	32	30	26	23
		kW	1.73	1.73	1.73	1.74	1.92	1.92	1.92	1.93	2.13	2.13	2.13	2.14	2.36	2.36	2.35	2.37	2.61	2.61	2.61	2.62	2.91	2.91	2.91	2.92
		Amps	6.6	6.6	6.6	6.7	7.5	7.5	7.5	7.6	8.5	8.5	8.4	8.5	9.5	9.5	9.5	9.6	10.7	10.7	10.7	10.7	12.0	12.0	12.0	12.1
		HI PR	243	245	246	250	281	282	284	288	321	322	324	328	364	365	366	370	410	411	412	416	459	460	461	466
		LO PR	120	122	125	129	127	129	132	137	133	135	138	143	139	140	143	148	144	145	148	153	150	152	155	160
	1000	MBh	30.1	30.5	31.3	32.6	29.8	30.2	31.1	32.4	29.1	29.5	30.3	31.6	27.8	28.2	29.0	30.3	26.2	26.6	27.5	28.8	24.8	25.2	26.0	27.3
		S/T	1.00	0.96	0.83	0.69	1.00	0.96	0.83	0.69	1.00	1.00	0.86	0.72	1.00	1.00	0.87	0.74	1.00	1.00	0.90	0.76	1.00	1.00	0.95	0.81
		ΔT	30	28	24	21	30	28	24	21	30	28	25	21	30	28	24	21	29	28	24	21	31	29	25	22
		kW	1.74	1.74	1.74	1.75	1.93	1.93	1.93	1.94	2.14	2.14	2.14	2.15	2.37	2.37	2.36	2.38	2.62	2.62	2.62	2.63	2.92	2.92	2.92	2.93
		Amps	6.7	6.7	6.7	6.7	7.6	7.5	7.5	7.6	8.5	8.5	8.5	8.6	9.6	9.6	9.5	9.6	10.7	10.7	10.7	10.8	12.1	12.1	12.1	12.1
		HI PR	246	247	249	253	284	285	286	291	323	324	326	330	366	367	369	373	412	413	415	419	461	462	464	468
		LO PR	122	124	127	132	130	131	134	139	136	137	140	145	141	142	145	150	146	148	150	155	153	154	157	162
	1125	MBh	30.7	31.1	32.0	33.3	30.4	30.9	31.7	33.0	29.7	30.1	31.0	32.3	28.4	28.8	29.7	31.0	26.9	27.3	28.1	29.4	25.4	25.8	26.7	28.0
		S/T	1.00	0.96	0.83	0.69	1.00	0.97	0.84	0.70	1.00	1.00	0.86	0.72	1.00	1.00	0.88	0.74	1.00	1.00	0.90	0.76	1.00	1.00	1.00	0.81
		ΔT	29	27	23	20	29	27	23	20	29	27	24	20	29	27	23	20	29	27	23	20	30	28	24	21
		kW	1.75	1.75	1.74	1.76	1.94	1.94	1.93	1.95	2.15	2.15	2.14	2.16	2.38	2.37	2.37	2.39	2.63	2.63	2.63	2.64	2.93	2.93	2.92	2.94
		Amps	6.7	6.7	6.7	6.8	7.6	7.6	7.6	7.6	8.6	8.5	8.5	8.6	9.6	9.6	9.6	9.6	10.8	10.8	10.7	10.8	12.1	12.1	12.1	12.2
		HI PR	248	249	251	255	286	287	289	293	326	327	328	333	368	369	371	375	414	415	417	421	463	464	466	470
		LO PR	125	126	129	134	132	134	136	141	138	140	143	148	144	145	148	153	149	150	153	158	155	157	159	164

IDB: Entering Indoor Dry Bulb Temperature

High and low pressures are measured at the liquid and suction service valves.

Shaded area reflects AHRI Rating Conditions.

kW = Total system power

Amps = Outdoor unit amps (compressor + fan)

Expanded Cooling Data — GSZ140361K* + ARUF37C14** + TXV

			Outdoor Ambient Temperature																							
			65ºF				75ºF				85ºF				95ºF				105ºF				115ºF			
			Entering Indoor Wet Bulb Temperature																							
IDB	Airflow		59	63	67	71	59	63	67	71	59	63	67	71	59	63	67	71	59	63	67	71	59	63	67	71
70	1070	MBh	36.3	36.8	37.9	-	36.0	36.5	37.5	-	35.0	35.5	36.6	-	33.4	33.9	35.0	-	31.5	32.0	33.0	-	29.7	30.2	31.2	-
		S/T	0.65	0.57	0.44	-	0.66	0.58	0.45	-	0.68	0.61	0.47	-	0.70	0.62	0.49	-	1.00	0.65	0.51	-	1.00	0.70	0.56	-
		ΔT	19	18	14	-	19	17	14	-	20	18	14	-	19	17	14	-	19	17	14	-	20	18	15	-
		kW	2.17	2.17	2.16	-	2.44	2.43	2.43	-	2.73	2.73	2.72	-	3.05	3.05	3.04	-	3.41	3.41	3.40	-	3.83	3.83	3.82	-
		Amps	8.3	8.3	8.2	-	9.5	9.5	9.5	-	10.8	10.8	10.8	-	12.3	12.3	12.3	-	13.9	13.9	13.9	-	15.9	15.9	15.8	-
		HI PR	263	265	266	-	305	306	308	-	348	349	351	-	394	395	397	-	444	446	447	-	498	499	501	-
		LO PR	121	123	126	-	129	130	133	-	135	137	140	-	140	142	145	-	146	147	150	-	152	154	157	-
	1200	MBh	36.8	37.3	38.4	-	36.5	37.0	38.1	-	35.6	36.1	37.2	-	34.0	34.5	35.5	-	32.0	32.5	33.6	-	30.2	30.7	31.8	-
		S/T	0.68	0.61	0.48	-	0.69	0.61	0.48	-	0.71	0.64	0.51	-	0.73	0.66	0.52	-	1.00	0.68	0.55	-	1.00	0.73	0.60	-
		ΔT	18	17	13	-	18	17	13	-	19	17	13	-	18	17	13	-	18	16	13	-	19	17	14	-
		kW	2.18	2.18	2.17	-	2.45	2.44	2.44	-	2.74	2.74	2.74	-	3.06	3.06	3.06	-	3.42	3.42	3.41	-	3.84	3.84	3.83	-
		Amps	8.3	8.3	8.3	-	9.5	9.5	9.5	-	10.9	10.9	10.9	-	12.4	12.4	12.3	-	14.0	14.0	14.0	-	15.9	15.9	15.9	-
		HI PR	266	267	268	-	307	308	310	-	350	351	353	-	396	398	399	-	447	448	450	-	500	501	503	-
		LO PR	123	125	128	-	131	132	135	-	137	138	142	-	142	144	147	-	148	149	152	-	154	156	159	-
	1350	MBh	37.6	38.1	39.2	-	37.3	37.8	38.9	-	36.3	36.8	37.9	-	34.7	35.2	36.3	-	32.8	33.3	34.3	-	31.0	31.5	32.5	-
		S/T	0.69	0.62	0.49	-	0.70	0.62	0.49	-	0.72	0.65	0.52	-	1.00	0.67	0.54	-	1.00	0.69	0.56	-	1.00	0.74	0.61	-
		ΔT	18	16	12	-	17	16	12	-	18	16	12	-	17	16	12	-	17	15	12	-	18	16	13	-
		kW	2.19	2.19	2.19	-	2.46	2.46	2.45	-	2.75	2.75	2.75	-	3.07	3.07	3.07	-	3.43	3.43	3.42	-	3.85	3.85	3.84	-
		Amps	8.4	8.4	8.4	-	9.6	9.6	9.6	-	10.9	10.9	10.9	-	12.4	12.4	12.4	-	14.1	14.0	14.0	-	16.0	16.0	15.9	-
		HI PR	268	269	271	-	309	310	312	-	352	354	355	-	399	400	402	-	449	450	452	-	503	504	505	-
		LO PR	126	127	130	-	133	135	138	-	139	141	144	-	145	146	149	-	150	152	155	-	157	158	161	-
75	1070	MBh	36.3	36.8	37.9	39.5	36.0	36.5	37.6	39.2	35.0	35.6	36.6	38.3	33.4	**33.9**	35.0	36.6	31.5	32.0	33.0	34.7	29.7	30.2	31.3	32.9
		S/T	0.77	0.70	0.57	0.43	0.78	0.71	0.57	0.44	1.00	0.73	0.60	0.46	1.00	**0.75**	0.62	0.48	1.00	0.77	0.64	0.50	1.00	0.82	0.69	0.55
		ΔT	24	22	18	14	24	22	18	14	24	22	18	15	24	**22**	18	14	23	21	18	14	24	23	19	15
		kW	2.17	2.17	2.16	2.18	2.43	2.43	2.43	2.45	2.73	2.73	2.72	2.74	3.05	**3.05**	3.04	3.06	3.41	3.40	3.40	3.42	3.83	3.82	3.82	3.84
		Amps	8.3	8.3	8.2	8.3	9.5	9.5	9.5	9.5	10.8	10.8	10.8	10.9	12.3	**12.3**	12.3	12.4	13.9	13.9	13.9	14.0	15.9	15.8	15.8	15.9
		HI PR	264	265	267	271	305	306	308	312	348	349	351	356	395	**396**	398	402	445	446	448	452	498	499	501	506
		LO PR	121	123	126	131	129	130	133	138	135	137	140	145	141	**142**	145	150	146	147	150	155	152	154	157	162
	1200	MBh	36.9	37.4	38.4	40.1	36.5	37.0	38.1	39.7	35.6	36.1	37.2	38.8	34.0	**34.5**	35.6	37.2	32.0	32.5	33.6	35.2	30.2	30.7	31.8	33.4
		S/T	0.81	0.73	0.60	0.46	0.81	0.74	0.61	0.47	1.00	0.76	0.63	0.49	1.00	**0.78**	0.65	0.51	1.00	0.80	0.67	0.53	1.00	1.00	0.72	0.58
		ΔT	23	21	17	14	23	21	17	13	23	21	17	14	23	**21**	17	13	22	20	17	13	24	22	18	14
		kW	2.18	2.18	2.17	2.19	2.44	2.44	2.44	2.46	2.74	2.74	2.73	2.75	3.06	**3.06**	3.05	3.07	3.42	3.42	3.41	3.43	3.84	3.84	3.83	3.85
		Amps	8.3	8.3	8.3	8.4	9.5	9.5	9.5	9.6	10.9	10.9	10.9	11.0	12.4	**12.3**	12.3	12.4	14.0	14.0	14.0	14.1	15.9	15.9	15.9	16.0
		HI PR	266	267	269	273	307	308	310	314	350	351	353	358	397	**398**	400	404	447	448	450	454	500	501	503	508
		LO PR	123	125	128	133	131	132	135	140	137	138	142	147	142	**144**	147	152	148	149	152	157	154	156	159	164
	1350	MBh	37.6	38.1	39.2	40.8	37.3	37.8	38.9	40.5	36.4	36.9	37.9	39.6	34.8	**35.3**	36.3	38.0	32.8	33.3	34.4	36.0	31.0	31.5	32.6	34.2
		S/T	0.82	0.74	0.61	0.47	0.82	0.75	0.62	0.48	1.00	0.78	0.64	0.50	1.00	**0.79**	0.66	0.52	1.00	0.82	0.68	0.54	1.00	1.00	0.73	0.59
		ΔT	22	20	16	13	22	20	16	13	22	20	16	13	22	**20**	16	13	21	19	16	12	23	21	17	13
		kW	2.19	2.19	2.18	2.20	2.46	2.45	2.45	2.47	2.75	2.75	2.75	2.77	3.07	**3.07**	3.07	3.09	3.43	3.43	3.42	3.44	3.85	3.85	3.84	3.86
		Amps	8.4	8.4	8.3	8.4	9.6	9.6	9.6	9.7	10.9	10.9	10.9	11.0	12.4	**12.4**	12.4	12.5	14.0	14.0	14.0	14.1	16.0	16.0	15.9	16.0
		HI PR	268	269	271	276	309	311	312	317	353	354	356	360	399	**400**	402	407	449	450	452	457	503	504	506	510
		LO PR	126	127	130	135	133	135	138	143	140	141	144	149	145	**146**	149	155	150	152	155	160	157	158	161	166

IDB: Entering Indoor Dry Bulb Temperature

High and low pressures are measured at the liquid and suction service valves.

Shaded area reflects ACCA (TVA) Rating Conditions.

kW = Total system power

Amps = Outdoor unit amps (compressor + fan)

			Outdoor Ambient Temperature																							
			65ºF				75ºF				85ºF				95ºF				105ºF				115ºF			
			Entering Indoor Wet Bulb Temperature																							
IDB	Airflow		59	63	67	71	59	63	67	71	59	63	67	71	59	63	67	71	59	63	67	71	59	63	67	71
80	1070	MBh	36.5	37.0	38.1	39.7	36.2	36.7	37.7	39.4	35.2	35.7	36.8	38.4	33.6	34.1	**35.2**	36.8	31.7	32.2	33.2	34.9	29.9	30.4	31.4	33.1
		S/T	0.90	0.82	0.69	0.55	1.00	0.83	0.70	0.56	1.00	0.85	0.72	0.58	1.00	0.87	**0.74**	0.60	1.00	1.00	0.76	0.62	1.00	1.00	0.81	0.67
		ΔT	28	26	22	19	28	26	22	19	28	26	23	19	28	26	**22**	19	28	26	22	18	29	27	23	20
		kW	2.17	2.17	2.16	2.18	2.43	2.43	2.43	2.45	2.73	2.73	2.72	2.74	3.05	3.05	**3.04**	3.06	3.41	3.41	3.40	3.42	3.83	3.83	3.82	3.84
		Amps	8.3	8.3	8.2	8.3	9.5	9.5	9.5	9.6	10.8	10.8	10.8	10.9	12.3	12.3	**12.3**	12.4	13.9	13.9	13.9	14.0	15.9	15.9	15.8	15.9
		HI PR	264	265	267	272	305	306	308	313	349	350	351	356	395	396	**398**	403	445	446	448	453	499	500	502	506
		LO PR	122	123	127	132	129	131	134	139	136	137	140	145	141	143	**146**	151	146	148	151	156	153	154	157	163
	1200	MBh	37.0	37.5	38.6	40.2	36.7	37.2	38.3	39.9	35.8	36.3	37.4	39.0	34.2	34.7	35.7	37.4	32.2	32.7	33.8	35.4	30.4	30.9	32.0	33.6
		S/T	1.00	0.86	0.72	0.58	1.00	0.86	0.73	0.59	1.00	0.89	0.75	0.61	1.00	0.90	0.77	0.63	1.00	1.00	0.79	0.65	1.00	1.00	0.84	0.71
		ΔT	27	25	21	18	27	25	21	18	27	25	22	18	27	25	21	18	27	25	21	17	28	26	22	19
		kW	2.18	2.18	2.17	2.19	2.45	2.44	2.44	2.46	2.74	2.74	2.74	2.76	3.06	3.06	3.06	3.08	3.42	3.42	3.41	3.43	3.84	3.84	3.83	3.85
		Amps	8.3	8.3	8.3	8.4	9.5	9.5	9.5	9.6	10.9	10.9	10.9	11.0	12.4	12.4	12.3	12.4	14.0	14.0	14.0	14.1	15.9	15.9	15.9	16.0
		HI PR	266	267	269	274	307	309	310	315	351	352	354	358	397	398	400	405	447	448	450	455	501	502	504	508
		LO PR	124	125	128	133	131	133	136	141	138	139	142	147	143	144	147	153	148	150	153	158	155	156	159	164
	1350	MBh	37.8	38.3	39.4	41.0	37.5	38.0	39.1	40.7	36.5	37.1	38.1	39.8	34.9	35.4	36.5	38.1	33.0	33.5	34.5	36.2	31.2	31.7	32.8	34.4
		S/T	1.00	0.87	0.73	0.60	1.00	0.87	0.74	0.60	1.00	0.90	0.77	0.63	1.00	1.00	0.78	0.64	1.00	1.00	0.81	0.67	1.00	1.00	0.86	0.72
		ΔT	26	24	20	17	26	24	20	17	26	24	21	17	26	24	20	17	26	24	20	16	27	25	21	18
		kW	2.19	2.19	2.19	2.21	2.46	2.46	2.45	2.47	2.75	2.75	2.75	2.77	3.07	3.07	3.07	3.09	3.43	3.43	3.42	3.44	3.85	3.85	3.84	3.86
		Amps	8.4	8.4	8.4	8.4	9.6	9.6	9.6	9.7	10.9	10.9	10.9	11.0	12.4	12.4	12.4	12.5	14.0	14.0	14.0	14.1	16.0	16.0	15.9	16.0
		HI PR	269	270	272	276	310	311	313	317	353	354	356	361	400	401	403	407	450	451	453	457	503	504	506	511
		LO PR	126	128	131	136	134	135	138	143	140	142	145	150	145	147	150	155	151	152	155	160	157	159	162	167
85	1070	MBh	37.1	37.6	38.7	40.3	36.8	37.3	38.3	40.0	35.8	36.3	37.4	39.0	34.2	34.7	35.8	37.4	32.3	32.8	33.8	35.5	30.5	31.0	32.0	33.7
		S/T	1.00	0.92	0.79	0.65	1.00	0.93	0.80	0.66	1.00	1.00	0.82	0.68	1.00	1.00	0.84	0.70	1.00	1.00	0.86	0.72	1.00	1.00	1.00	0.77
		ΔT	32	30	26	22	32	30	26	22	32	30	26	23	31	30	26	22	31	29	26	22	32	31	27	23
		kW	2.17	2.17	2.17	2.19	2.44	2.44	2.43	2.45	2.74	2.73	2.73	2.75	3.06	3.05	3.05	3.07	3.41	3.41	3.41	3.43	3.83	3.83	3.83	3.85
		Amps	8.3	8.3	8.3	8.4	9.5	9.5	9.5	9.6	10.9	10.9	10.8	10.9	12.3	12.3	12.3	12.4	14.0	14.0	13.9	14.0	15.9	15.9	15.9	16.0
		HI PR	265	266	268	273	307	308	310	314	350	351	353	357	396	397	399	404	446	448	449	454	500	501	503	507
		LO PR	124	125	128	133	131	133	136	141	137	139	142	147	143	144	147	152	148	150	153	158	155	156	159	164
	1200	MBh	37.6	38.1	39.2	40.8	37.3	37.8	38.9	40.5	36.4	36.9	38.0	39.6	34.8	35.3	36.4	38.0	32.8	33.3	34.4	36.0	31.0	31.5	32.6	34.2
		S/T	1.00	0.95	0.82	0.68	1.00	0.96	0.83	0.69	1.00	1.00	0.85	0.71	1.00	1.00	0.87	0.73	1.00	1.00	0.89	0.75	1.00	1.00	1.00	0.80
		ΔT	31	29	25	21	31	29	25	21	31	29	25	22	31	29	25	21	30	28	25	21	31	30	26	22
		kW	2.19	2.18	2.18	2.20	2.45	2.45	2.44	2.46	2.75	2.74	2.74	2.76	3.07	3.06	3.06	3.08	3.42	3.42	3.42	3.44	3.84	3.84	3.84	3.86
		Amps	8.4	8.3	8.3	8.4	9.6	9.6	9.5	9.6	10.9	10.9	10.9	11.0	12.4	12.4	12.4	12.4	14.0	14.0	14.0	14.1	15.9	15.9	15.9	16.0
		HI PR	267	269	270	275	309	310	312	316	352	353	355	359	398	399	401	406	448	450	451	456	502	503	505	509
		LO PR	126	127	130	135	133	134	137	143	139	141	144	149	145	146	149	154	150	151	155	160	157	158	161	166
	1350	MBh	38.4	38.9	40.0	41.6	38.1	38.6	39.7	41.3	37.2	37.7	38.7	40.4	35.5	36.0	37.1	38.8	33.6	34.1	35.2	36.8	31.8	32.3	33.4	35.0
		S/T	1.00	0.97	0.83	0.69	1.00	1.00	0.84	0.70	1.00	1.00	0.86	0.72	1.00	1.00	0.88	0.74	1.00	1.00	0.90	0.77	1.00	1.00	1.00	0.82
		ΔT	30	28	24	21	30	28	24	20	30	28	24	21	30	28	24	20	29	27	24	20	31	29	25	21
		kW	2.20	2.20	2.19	2.21	2.46	2.46	2.46	2.48	2.76	2.76	2.75	2.77	3.08	3.08	3.07	3.09	3.44	3.43	3.43	3.45	3.86	3.85	3.85	3.87
		Amps	8.4	8.4	8.4	8.5	9.6	9.6	9.6	9.7	11.0	11.0	10.9	11.0	12.4	12.4	12.4	12.5	14.1	14.1	14.0	14.1	16.0	16.0	16.0	16.1
		HI PR	270	271	273	277	311	312	314	319	354	355	357	362	401	402	404	408	451	452	454	458	504	506	507	512
		LO PR	128	130	133	138	135	137	140	145	142	143	146	151	147	149	152	157	153	154	157	162	159	161	164	169

IDB: Entering Indoor Dry Bulb Temperature

High and low pressures are measured at the liquid and suction service valves.

Shaded area reflects AHRI Rating Conditions.

kW = Total system power

Amps = Outdoor unit amps (compressor + fan)

			Outdoor Ambient Temperature																							
			65ºF				75ºF				85ºF				95ºF				105ºF				115ºF			
			Entering Indoor Wet Bulb Temperature																							
IDB	Airflow		59	63	67	71	59	63	67	71	59	63	67	71	59	63	67	71	59	63	67	71	59	63	67	71
70	985	MBh	34.0	34.5	35.5	-	33.7	34.2	35.2	-	32.8	33.3	34.3	-	31.3	31.8	32.8	-	29.5	30.0	31.0	-	27.8	28.3	29.3	-
		S/T	0.64	0.56	0.43	-	0.64	0.57	0.44	-	0.67	0.59	0.46	-	0.69	0.61	0.48	-	1.00	0.63	0.50	-	1.00	0.68	0.55	-
		ΔT	20	18	14	-	20	18	14	-	20	18	14	-	20	18	14	-	19	17	14	-	21	19	15	-
		kW	2.03	2.03	2.02	-	2.25	2.25	2.25	-	2.50	2.50	2.50	-	2.78	2.77	2.77	-	3.08	3.08	3.07	-	3.44	3.44	3.43	-
		Amps	7.6	7.6	7.6	-	8.7	8.7	8.6	-	9.8	9.8	9.8	-	11.1	11.1	11.0	-	12.5	12.4	12.4	-	14.1	14.1	14.1	-
		Hi PR	250	251	253	-	289	290	292	-	330	331	333	-	374	375	377	-	421	422	424	-	472	473	475	-
		Lo PR	121	123	126	-	129	130	133	-	135	136	139	-	140	142	145	-	146	147	150	-	152	154	157	-
	1200	MBh	35.0	35.5	36.5	-	34.7	35.2	36.2	-	33.8	34.3	35.3	-	32.3	32.8	33.8	-	30.5	31.0	32.0	-	28.8	29.3	30.3	-
		S/T	0.68	0.61	0.48	-	0.69	0.61	0.48	-	0.71	0.64	0.51	-	1.00	0.66	0.53	-	1.00	0.68	0.55	-	1.00	0.73	0.60	-
		ΔT	18	16	13	-	18	16	12	-	18	16	13	-	18	16	12	-	18	16	12	-	19	17	13	-
		kW	2.04	2.04	2.04	-	2.27	2.27	2.26	-	2.52	2.52	2.51	-	2.79	2.79	2.79	-	3.10	3.10	3.09	-	3.45	3.45	3.45	-
		Amps	7.7	7.7	7.7	-	8.7	8.7	8.7	-	9.9	9.9	9.9	-	11.1	11.1	11.1	-	12.5	12.5	12.5	-	14.2	14.2	14.1	-
		Hi PR	253	254	256	-	292	294	295	-	333	334	336	-	377	379	380	-	425	426	428	-	476	477	479	-
		Lo PR	125	126	129	-	132	134	137	-	138	140	143	-	144	145	148	-	149	151	154	-	156	157	160	-
	1350	MBh	35.9	36.4	37.4	-	35.6	36.1	37.1	-	34.7	35.2	36.2	-	33.2	33.7	34.7	-	31.4	31.9	32.9	-	29.7	30.2	31.2	-
		S/T	0.67	0.60	0.47	-	0.68	0.61	0.48	-	0.70	0.63	0.50	-	1.00	0.65	0.52	-	1.00	0.67	0.54	-	1.00	0.72	0.59	-
		ΔT	17	15	12	-	17	15	11	-	17	15	12	-	17	15	11	-	17	15	11	-	18	16	12	-
		kW	2.05	2.05	2.05	-	2.28	2.28	2.27	-	2.53	2.53	2.52	-	2.80	2.80	2.80	-	3.11	3.10	3.10	-	3.46	3.46	3.46	-
		Amps	7.7	7.7	7.7	-	8.8	8.8	8.8	-	9.9	9.9	9.9	-	11.2	11.2	11.2	-	12.6	12.6	12.5	-	14.2	14.2	14.2	-
		Hi PR	256	257	259	-	295	296	298	-	336	337	339	-	380	381	383	-	428	429	430	-	478	479	481	-
		Lo PR	128	129	132	-	135	137	140	-	142	143	146	-	147	148	151	-	152	154	157	-	159	160	163	-
75	985	MBh	34.0	34.5	35.5	37.0	33.7	34.2	35.2	36.7	32.9	33.3	34.3	35.9	31.3	**31.8**	32.8	34.4	29.5	30.0	31.0	32.5	27.8	28.3	29.3	30.8
		S/T	0.76	0.69	0.56	0.42	0.77	0.69	0.56	0.43	1.00	0.72	0.59	0.45	1.00	**0.74**	0.61	0.47	1.00	0.76	0.63	0.49	1.00	0.81	0.68	0.54
		ΔT	24	22	18	15	24	22	18	15	24	22	19	15	24	**22**	18	15	24	22	18	14	25	23	19	16
		kW	2.03	2.02	2.02	2.04	2.25	2.25	2.25	2.26	2.50	2.50	2.50	2.51	2.77	**2.77**	2.77	2.79	3.08	3.08	3.07	3.09	3.44	3.43	3.43	3.45
		Amps	7.6	7.6	7.6	7.7	8.7	8.6	8.6	8.7	9.8	9.8	9.8	9.9	11.1	**11.0**	11.0	11.1	12.4	12.4	12.4	12.5	14.1	14.1	14.1	14.1
		Hi PR	250	251	253	257	289	290	292	296	330	331	333	337	374	**375**	377	381	422	423	424	429	472	473	475	479
		Lo PR	121	123	126	131	129	130	133	138	135	136	139	145	140	**142**	145	150	146	147	150	155	152	154	157	162
	1200	MBh	35.0	35.5	36.5	38.0	34.7	35.2	36.2	37.7	33.9	34.3	35.3	36.9	32.3	32.8	33.8	35.4	30.5	31.0	32.0	33.5	28.8	29.3	30.3	31.8
		S/T	0.80	0.73	0.60	0.46	0.81	0.74	0.61	0.47	1.00	0.76	0.63	0.49	1.00	0.78	0.65	0.51	1.00	0.80	0.67	0.53	1.00	1.00	0.72	0.58
		ΔT	22	20	17	13	22	20	17	13	22	21	17	13	22	20	17	13	22	20	16	13	23	21	18	14
		kW	2.04	2.04	2.04	2.05	2.27	2.27	2.26	2.28	2.52	2.52	2.51	2.53	2.79	2.79	2.79	2.80	3.10	3.09	3.09	3.11	3.45	3.45	3.45	3.46
		Amps	7.7	7.7	7.7	7.8	8.7	8.7	8.7	8.8	9.9	9.9	9.9	9.9	11.1	11.1	11.1	11.2	12.5	12.5	12.5	12.6	14.2	14.1	14.1	14.2
		Hi PR	254	255	256	261	293	294	295	300	334	335	336	341	378	379	380	385	425	426	428	432	476	477	479	483
		Lo PR	125	126	129	134	132	134	137	142	138	140	143	148	144	145	148	153	149	151	154	159	156	157	160	165
	1350	MBh	35.9	36.4	37.4	38.9	35.6	36.1	37.1	38.6	34.8	35.2	36.2	37.8	33.2	33.7	34.7	36.3	31.4	31.9	32.9	34.4	29.7	30.2	31.2	32.7
		S/T	0.80	0.72	0.59	0.46	1.00	0.73	0.60	0.46	1.00	0.75	0.62	0.49	1.00	0.77	0.64	0.51	1.00	0.79	0.66	0.53	1.00	1.00	0.71	0.58
		ΔT	21	19	16	12	21	19	16	12	21	20	16	12	21	19	16	12	21	19	15	12	22	20	17	13
		kW	2.05	2.05	2.05	2.06	2.28	2.28	2.27	2.29	2.53	2.53	2.52	2.54	2.80	2.80	2.80	2.81	3.11	3.10	3.10	3.12	3.46	3.46	3.46	3.47
		Amps	7.7	7.7	7.7	7.8	8.8	8.8	8.7	8.8	9.9	9.9	9.9	10.0	11.2	11.2	11.1	11.2	12.6	12.6	12.5	12.6	14.2	14.2	14.2	14.3
		Hi PR	256	257	259	263	295	296	298	302	336	337	339	343	380	381	383	387	428	429	431	435	479	480	481	486
		Lo PR	128	129	132	138	135	137	140	145	142	143	146	151	147	148	151	157	152	154	157	162	159	160	163	168

IDB: Entering Indoor Dry Bulb Temperature

High and low pressures are measured at the liquid and suction service valves.

Shaded area reflects ACCA (TVA) Rating Conditions.

kW = Total system power

Amps = Outdoor unit amps (compressor + fan)

			Outdoor Ambient Temperature																							
			65ºF				75ºF				85ºF				95ºF				105ºF				115ºF			
			Entering Indoor Wet Bulb Temperature																							
IDB	Airflow		59	63	67	71	59	63	67	71	59	63	67	71	59	63	67	71	59	63	67	71	59	63	67	71
80	985	MBh	34.2	34.7	35.7	37.2	33.9	34.4	35.4	36.9	33.0	33.5	34.5	36.0	31.5	32.0	**33.0**	34.5	29.7	30.2	31.2	32.7	28.0	28.5	29.5	31.0
		S/T	0.88	0.81	0.68	0.54	1.00	0.81	0.68	0.55	1.00	0.84	0.71	0.57	1.00	0.86	**0.73**	0.59	1.00	1.00	0.75	0.61	1.00	1.00	0.80	0.66
		ΔT	28	26	23	19	28	26	23	19	28	26	23	19	28	26	**23**	19	28	26	22	19	29	27	24	20
		kW	2.03	2.02	2.02	2.04	2.25	2.25	2.25	2.26	2.50	2.50	2.50	2.52	2.78	2.77	**2.77**	2.79	3.08	3.08	3.07	3.09	3.44	3.44	3.43	3.45
		Amps	7.6	7.6	7.6	7.7	8.7	8.7	8.6	8.7	9.8	9.8	9.8	9.9	11.1	11.0	**11.0**	11.1	12.4	12.4	12.4	12.5	14.1	14.1	14.1	14.1
		Hi PR	250	252	253	258	290	291	292	297	330	332	333	338	375	376	**377**	382	422	423	425	429	473	474	476	480
		Lo PR	122	123	126	131	129	131	134	139	135	137	140	145	141	142	**145**	150	146	148	151	156	153	154	157	162
	1200	MBh	35.2	35.7	36.7	38.2	34.9	35.4	36.4	37.9	34.0	34.5	35.5	37.0	32.5	33.0	34.0	35.5	30.7	31.1	32.1	33.7	29.0	29.5	30.5	32.0
		S/T	1.00	0.85	0.72	0.58	1.00	0.86	0.73	0.59	1.00	0.88	0.75	0.61	1.00	1.00	0.77	0.63	1.00	1.00	0.79	0.65	1.00	1.00	0.84	0.70
		ΔT	27	25	21	17	26	25	21	17	27	25	21	17	26	25	21	17	26	24	21	17	27	25	22	18
		kW	2.04	2.04	2.04	2.05	2.27	2.27	2.26	2.28	2.52	2.52	2.51	2.53	2.79	2.79	2.79	2.80	3.10	3.09	3.09	3.11	3.45	3.45	3.45	3.47
		Amps	7.7	7.7	7.7	7.8	8.7	8.7	8.7	8.8	9.9	9.9	9.9	9.9	11.1	11.1	11.1	11.2	12.5	12.5	12.5	12.6	14.2	14.1	14.1	14.2
		Hi PR	254	255	257	261	293	294	296	300	334	335	337	341	378	379	381	385	426	427	428	433	476	477	479	484
		Lo PR	125	127	130	135	133	134	137	142	139	141	144	149	144	146	149	154	150	151	154	159	156	158	161	166
	1350	MBh	36.1	36.6	37.6	39.1	35.8	36.3	37.3	38.8	34.9	35.4	36.4	37.9	33.4	33.9	34.9	36.4	31.6	32.0	33.1	34.6	29.9	30.4	31.4	32.9
		S/T	1.00	0.84	0.71	0.58	1.00	0.85	0.72	0.58	1.00	0.87	0.74	0.61	1.00	1.00	0.76	0.63	1.00	1.00	0.78	0.65	1.00	1.00	0.83	0.70
		ΔT	26	24	20	16	25	24	20	16	26	24	20	17	25	24	20	16	25	23	20	16	26	24	21	17
		kW	2.05	2.05	2.05	2.06	2.28	2.28	2.27	2.29	2.53	2.53	2.52	2.54	2.80	2.80	2.80	2.81	3.11	3.10	3.10	3.12	3.46	3.46	3.46	3.47
		Amps	7.7	7.7	7.7	7.8	8.8	8.8	8.8	8.8	9.9	9.9	9.9	10.0	11.2	11.2	11.2	11.2	12.6	12.6	12.5	12.6	14.2	14.2	14.2	14.3
		Hi PR	257	258	260	264	296	297	299	303	337	338	340	344	381	382	384	388	428	429	431	435	479	480	482	486
		Lo PR	128	130	133	138	136	137	140	145	142	144	147	152	147	149	152	157	153	154	157	162	159	161	164	169
85	985	MBh	34.8	35.2	36.3	37.8	34.5	34.9	36.0	37.5	33.6	34.1	35.1	36.6	32.1	32.6	33.6	35.1	30.2	30.7	31.7	33.3	28.6	29.0	30.0	31.6
		S/T	1.00	0.91	0.78	0.64	1.00	0.91	0.78	0.64	1.00	1.00	0.81	0.67	1.00	1.00	0.82	0.69	1.00	1.00	0.85	0.71	1.00	1.00	1.00	0.76
		ΔT	32	30	26	23	32	30	26	23	32	30	27	23	32	30	26	23	32	30	26	22	33	31	27	24
		kW	2.03	2.03	2.03	2.04	2.26	2.25	2.25	2.27	2.51	2.51	2.50	2.52	2.78	2.78	2.77	2.79	3.08	3.08	3.08	3.10	3.44	3.44	3.44	3.45
		Amps	7.6	7.6	7.6	7.7	8.7	8.7	8.7	8.7	9.8	9.8	9.8	9.9	11.1	11.1	11.1	11.1	12.5	12.5	12.4	12.5	14.1	14.1	14.1	14.2
		Hi PR	252	253	254	259	291	292	293	298	332	333	334	339	376	377	379	383	423	424	426	430	474	475	477	481
		Lo PR	124	125	128	133	131	132	135	140	137	139	142	147	143	144	147	152	148	149	152	158	155	156	159	164
	1200	MBh	35.8	36.2	37.2	38.8	35.5	35.9	36.9	38.5	34.6	35.1	36.1	37.6	33.1	33.6	34.6	36.1	31.2	31.7	32.7	34.2	29.6	30.0	31.0	32.6
		S/T	1.00	0.95	0.82	0.68	1.00	1.00	0.82	0.69	1.00	1.00	0.85	0.71	1.00	1.00	0.87	0.73	1.00	1.00	0.89	0.75	1.00	1.00	1.00	0.80
		ΔT	30	28	25	21	30	28	25	21	31	29	25	21	30	28	25	21	30	28	24	21	31	29	26	22
		kW	2.05	2.05	2.04	2.06	2.27	2.27	2.27	2.28	2.52	2.52	2.52	2.54	2.80	2.79	2.79	2.81	3.10	3.10	3.10	3.11	3.46	3.46	3.45	3.47
		Amps	7.7	7.7	7.7	7.8	8.8	8.7	8.7	8.8	9.9	9.9	9.9	10.0	11.2	11.1	11.1	11.2	12.5	12.5	12.5	12.6	14.2	14.2	14.2	14.2
		Hi PR	255	256	258	262	294	295	297	301	335	336	338	342	379	380	382	386	427	428	430	434	478	479	480	485
		Lo PR	127	129	132	137	134	136	139	144	141	142	145	150	146	148	151	156	151	153	156	161	158	160	163	168
	1350	MBh	36.7	37.1	38.1	39.7	36.4	36.8	37.8	39.4	35.5	36.0	37.0	38.5	34.0	34.5	35.5	37.0	32.1	32.6	33.6	35.1	30.5	30.9	31.9	33.5
		S/T	1.00	0.94	0.81	0.67	1.00	1.00	0.82	0.68	1.00	1.00	0.84	0.70	1.00	1.00	0.86	0.72	1.00	1.00	1.00	0.74	1.00	1.00	1.00	0.79
		ΔT	29	27	24	20	29	27	24	20	30	28	24	20	29	27	24	20	29	27	23	20	30	28	25	21
		kW	2.06	2.06	2.05	2.07	2.28	2.28	2.28	2.29	2.53	2.53	2.53	2.55	2.81	2.80	2.80	2.82	3.11	3.11	3.11	3.12	3.47	3.47	3.46	3.48
		Amps	7.8	7.8	7.7	7.8	8.8	8.8	8.8	8.9	10.0	9.9	9.9	10.0	11.2	11.2	11.2	11.2	12.6	12.6	12.6	12.6	14.2	14.2	14.2	14.3
		Hi PR	258	259	261	265	297	298	300	304	338	339	341	345	382	383	385	389	430	431	432	437	480	481	483	487
		Lo PR	130	132	135	140	137	139	142	147	144	145	148	153	149	151	154	159	155	156	159	164	161	163	166	171

IDB: Entering Indoor Dry Bulb Temperature

Shaded area reflects AHRI Rating Conditions.

kW = Total system power

High and low pressures are measured at the liquid and suction service valves.

Amps = Outdoor unit amps (compressor + fan)

			Outdoor Ambient Temperature																							
			65ºF				75ºF				85ºF				95ºF				105ºF				115ºF			
			Entering Indoor Wet Bulb Temperature																							
IDB	Airflow		59	63	67	71	59	63	67	71	59	63	67	71	59	63	67	71	59	63	67	71	59	63	67	71
70	1300	MBh	40.2	40.8	41.9	-	39.8	40.4	41.6	-	38.8	39.4	40.6	-	37.0	37.6	38.8	-	34.8	35.4	36.6	-	32.9	33.4	34.6	-
		S/T	0.66	0.59	0.45	-	0.67	0.59	0.46	-	0.69	0.62	0.48	-	1.00	0.64	0.50	-	1.00	0.66	0.52	-	1.00	0.71	0.58	-
		ΔT	18	17	13	-	18	16	13	-	19	17	13	-	18	16	13	-	18	16	13	-	19	17	14	-
		kW	2.44	2.44	2.44	-	2.72	2.72	2.72	-	3.03	3.03	3.03	-	3.37	3.37	3.36	-	3.74	3.74	3.73	-	4.18	4.18	4.17	-
		Amps	9.0	9.0	8.9	-	10.2	10.2	10.2	-	11.7	11.6	11.6	-	13.2	13.2	13.2	-	14.9	14.9	14.9	-	16.9	16.9	16.9	-
		HI PR	254	255	257	-	294	295	297	-	335	337	338	-	380	381	383	-	429	430	431	-	480	481	483	-
		LO PR	124	125	129	-	131	133	136	-	138	139	143	-	143	145	148	-	149	150	153	-	156	157	160	-
	1400	MBh	40.6	41.1	42.3	-	40.2	40.8	42.0	-	39.2	39.7	40.9	-	37.4	38.0	39.1	-	35.2	35.8	37.0	-	33.2	33.8	35.0	-
		S/T	0.69	0.61	0.48	-	0.69	0.62	0.48	-	0.72	0.64	0.51	-	1.00	0.66	0.53	-	1.00	0.68	0.55	-	1.00	0.73	0.60	-
		ΔT	18	16	13	-	18	16	13	-	18	16	13	-	18	16	13	-	17	16	12	-	19	17	13	-
		kW	2.45	2.45	2.45	-	2.73	2.73	2.72	-	3.04	3.04	3.03	-	3.37	3.37	3.37	-	3.75	3.75	3.74	-	4.19	4.19	4.18	-
		Amps	9.0	9.0	9.0	-	10.3	10.3	10.2	-	11.7	11.7	11.7	-	13.2	13.2	13.2	-	14.9	14.9	14.9	-	17.0	16.9	16.9	-
		HI PR	255	256	258	-	295	296	298	-	337	338	340	-	382	383	384	-	430	431	433	-	481	483	484	-
		LO PR	125	127	130	-	133	134	137	-	139	141	144	-	145	146	149	-	150	152	155	-	157	158	161	-
	1575	MBh	41.3	41.9	43.1	-	41.0	41.5	42.7	-	39.9	40.5	41.7	-	38.2	38.7	39.9	-	36.0	36.5	37.7	-	34.0	34.6	35.7	-
		S/T	0.71	0.63	0.50	-	0.71	0.64	0.50	-	0.74	0.66	0.53	-	1.00	0.68	0.55	-	1.00	0.70	0.57	-	1.00	0.75	0.62	-
		ΔT	17	15	12	-	17	15	12	-	17	15	12	-	17	15	12	-	17	15	11	-	18	16	13	-
		kW	2.46	2.46	2.46	-	2.74	2.74	2.74	-	3.05	3.05	3.04	-	3.39	3.38	3.38	-	3.76	3.76	3.75	-	4.20	4.20	4.19	-
		Amps	9.1	9.0	9.0	-	10.3	10.3	10.3	-	11.7	11.7	11.7	-	13.3	13.3	13.2	-	15.0	15.0	15.0	-	17.0	17.0	17.0	-
		HI PR	258	259	260	-	297	298	300	-	339	340	342	-	384	385	387	-	432	433	435	-	484	485	487	-
		LO PR	127	129	132	-	135	136	140	-	141	143	146	-	147	148	152	-	152	154	157	-	159	161	164	-
75	1300	MBh	40.2	40.8	42.0	43.8	39.9	40.4	41.6	43.4	38.8	39.4	40.6	42.4	37.0	**37.6**	38.8	40.6	34.9	35.4	36.6	38.4	32.9	33.4	34.6	36.4
		S/T	0.79	0.72	0.58	0.44	0.80	0.72	0.59	0.44	1.00	0.75	0.61	0.47	1.00	**0.77**	0.63	0.49	1.00	0.79	0.65	0.51	1.00	1.00	0.70	0.56
		ΔT	22	20	17	14	22	20	17	14	22	21	17	14	22	**20**	17	14	22	20	17	13	23	21	18	14
		kW	2.44	2.44	2.44	2.46	2.72	2.72	2.71	2.73	3.03	3.03	3.02	3.04	3.37	**3.36**	3.36	3.38	3.74	3.74	3.73	3.75	4.18	4.18	4.17	4.19
		Amps	9.0	9.0	8.9	9.0	10.2	10.2	10.2	10.3	11.6	11.6	11.6	11.7	13.2	**13.2**	13.2	13.2	14.9	14.9	14.9	15.0	16.9	16.9	16.9	17.0
		HI PR	254	255	257	261	294	295	297	301	336	337	338	343	380	**382**	383	388	429	430	432	436	480	481	483	488
		LO PR	124	126	129	134	131	133	136	141	138	139	143	148	143	**145**	148	153	149	150	153	159	156	157	160	165
	1400	MBh	40.6	41.2	42.3	44.2	40.2	40.8	42.0	43.8	39.2	39.8	40.9	42.8	37.4	**38.0**	39.2	41.0	35.2	35.8	37.0	38.8	33.3	33.8	35.0	36.8
		S/T	0.82	0.74	0.60	0.46	0.82	0.75	0.61	0.47	1.00	0.77	0.64	0.49	1.00	**0.79**	0.65	0.51	1.00	0.81	0.68	0.53	1.00	1.00	0.73	0.59
		ΔT	22	20	17	13	22	20	16	13	22	20	17	13	22	**20**	16	13	21	20	16	13	22	21	17	14
		kW	2.45	2.45	2.44	2.47	2.73	2.73	2.72	2.74	3.04	3.04	3.03	3.05	3.37	**3.37**	3.37	3.39	3.75	3.75	3.74	3.76	4.19	4.18	4.18	4.20
		Amps	9.0	9.0	9.0	9.1	10.3	10.3	10.2	10.3	11.7	11.7	11.7	11.7	13.2	**13.2**	13.2	13.3	14.9	14.9	14.9	15.0	16.9	16.9	16.9	17.0
		HI PR	256	257	258	263	295	296	298	303	337	338	340	344	382	**383**	385	389	430	431	433	437	482	483	485	489
		LO PR	125	127	130	135	133	134	137	142	139	141	144	149	145	**146**	149	154	150	152	155	160	157	158	161	167
	1575	MBh	41.4	41.9	43.1	44.9	41.0	41.6	42.7	44.6	40.0	40.5	41.7	43.5	38.2	**38.7**	39.9	41.7	36.0	36.6	37.7	39.6	34.0	34.6	35.8	37.6
		S/T	0.84	0.76	0.62	0.48	1.00	0.77	0.63	0.49	1.00	0.79	0.66	0.51	1.00	**0.81**	0.68	0.53	1.00	0.83	0.70	0.55	1.00	1.00	0.75	0.61
		ΔT	21	19	16	12	21	19	16	12	21	19	16	12	21	**19**	16	12	20	19	15	12	22	20	16	13
		kW	2.46	2.46	2.46	2.48	2.74	2.74	2.73	2.75	3.05	3.05	3.04	3.06	3.39	**3.38**	3.38	3.40	3.76	3.76	3.75	3.77	4.20	4.20	4.19	4.21
		Amps	9.1	9.0	9.0	9.1	10.3	10.3	10.3	10.4	11.7	11.7	11.7	11.8	13.3	**13.3**	13.2	13.3	15.0	15.0	15.0	15.1	17.0	17.0	17.0	17.1
		HI PR	258	259	261	265	298	299	300	305	339	340	342	346	384	**385**	387	391	432	433	435	440	484	485	487	491
		LO PR	128	129	132	137	135	136	140	145	141	143	146	151	147	**148**	152	157	152	154	157	162	159	161	164	169

IDB: Entering Indoor Dry Bulb Temperature

High and low pressures are measured at the liquid and suction service valves.

Shaded area reflects ACCA (TVA) Rating Conditions.

kW = Total system power

Amps = Outdoor unit amps (compressor + fan)

			Outdoor Ambient Temperature																							
			65ºF				75ºF				85ºF				95ºF				105ºF				115ºF			
			Entering Indoor Wet Bulb Temperature																							
IDB	Airflow		59	63	67	71	59	63	67	71	59	63	67	71	59	63	67	71	59	63	67	71	59	63	67	71
80	1300	MBh	40.4	41.0	42.2	44.0	40.1	40.6	41.8	43.6	39.0	39.6	40.8	42.6	37.3	37.8	**39.0**	40.8	35.1	35.6	36.8	38.6	33.1	33.6	34.8	36.6
		S/T	1.00	0.84	0.71	0.56	1.00	0.85	0.71	0.57	1.00	0.87	0.74	0.59	1.00	1.00	**0.76**	0.61	1.00	1.00	0.78	0.64	1.00	1.00	0.83	0.69
		ΔT	26	24	21	18	26	24	21	18	26	25	21	18	26	24	**21**	18	26	24	21	17	27	25	22	18
		kW	2.44	2.44	2.44	2.46	2.72	2.72	2.72	2.74	3.03	3.03	3.02	3.05	3.37	3.36	**3.36**	3.38	3.74	3.74	3.73	3.76	4.18	4.18	4.17	4.20
		Amps	9.0	9.0	8.9	9.0	10.2	10.2	10.2	10.3	11.7	11.6	11.6	11.7	13.2	13.2	**13.2**	13.3	14.9	14.9	14.9	15.0	16.9	16.9	16.9	17.0
		HI PR	255	256	258	262	294	296	297	302	336	337	339	343	381	382	**384**	388	429	430	432	437	481	482	484	488
		LO PR	125	126	129	134	132	133	137	142	138	140	143	148	144	145	**149**	154	149	151	154	159	156	158	161	166
	1400	MBh	40.8	41.4	42.5	44.4	40.4	41.0	42.2	44.0	39.4	40.0	41.2	43.0	37.6	38.2	39.4	41.2	35.4	36.0	37.2	39.0	33.5	34.0	35.2	37.0
		S/T	1.00	0.86	0.73	0.59	1.00	0.87	0.74	0.59	1.00	0.90	0.76	0.62	1.00	1.00	0.78	0.64	1.00	1.00	0.80	0.66	1.00	1.00	0.85	0.71
		ΔT	26	24	21	17	26	24	20	17	26	24	21	17	26	24	20	17	25	24	20	17	26	25	21	18
		kW	2.45	2.45	2.45	2.47	2.73	2.73	2.72	2.74	3.04	3.04	3.03	3.05	3.37	3.37	3.37	3.39	3.75	3.75	3.74	3.76	4.19	4.19	4.18	4.20
		Amps	9.0	9.0	9.0	9.1	10.3	10.3	10.2	10.3	11.7	11.7	11.7	11.8	13.2	13.2	13.2	13.3	14.9	14.9	14.9	15.0	16.9	16.9	16.9	17.0
		HI PR	256	257	259	263	296	297	299	303	337	338	340	345	382	383	385	389	431	432	433	438	482	483	485	489
		LO PR	126	127	130	136	133	135	138	143	140	141	144	150	145	147	150	155	151	152	155	160	157	159	162	167
	1575	MBh	41.6	42.1	43.3	45.1	41.2	41.8	43.0	44.8	40.2	40.7	41.9	43.7	38.4	38.9	40.1	41.9	36.2	36.8	38.0	39.8	34.2	34.8	36.0	37.8
		S/T	1.00	0.88	0.75	0.61	1.00	0.89	0.76	0.61	1.00	0.92	0.78	0.64	1.00	1.00	0.80	0.66	1.00	1.00	0.82	0.68	1.00	1.00	0.87	0.73
		ΔT	25	23	20	16	25	23	20	16	25	23	20	16	25	23	20	16	24	23	19	16	26	24	20	17
		kW	2.46	2.46	2.46	2.48	2.74	2.74	2.73	2.76	3.05	3.05	3.04	3.07	3.39	3.38	3.38	3.40	3.76	3.76	3.75	3.78	4.20	4.20	4.19	4.21
		Amps	9.1	9.0	9.0	9.1	10.3	10.3	10.3	10.4	11.7	11.7	11.7	11.8	13.3	13.3	13.2	13.3	15.0	15.0	15.0	15.1	17.0	17.0	17.0	17.1
		HI PR	258	259	261	266	298	299	301	305	340	341	342	347	384	386	387	392	433	434	436	440	484	485	487	492
		LO PR	128	130	133	138	135	137	140	145	142	144	147	152	148	149	152	157	153	154	158	163	160	161	164	169
85	1300	MBh	41.1	41.7	42.8	44.7	40.7	41.3	42.5	44.3	39.7	40.3	41.5	43.3	37.9	38.5	39.7	41.5	35.7	36.3	37.5	39.3	33.8	34.3	35.5	37.3
		S/T	1.00	0.94	0.81	0.66	1.00	0.95	0.81	0.67	1.00	1.00	0.84	0.70	1.00	1.00	0.86	0.71	1.00	1.00	0.88	0.74	1.00	1.00	1.00	0.79
		ΔT	30	28	25	21	30	28	25	21	30	28	25	21	30	28	25	21	29	28	24	21	31	29	25	22
		kW	2.45	2.45	2.44	2.46	2.73	2.73	2.72	2.74	3.04	3.03	3.03	3.05	3.37	3.37	3.37	3.39	3.75	3.74	3.74	3.76	4.19	4.18	4.18	4.20
		Amps	9.0	9.0	9.0	9.1	10.3	10.3	10.2	10.3	11.7	11.7	11.6	11.7	13.2	13.2	13.2	13.3	14.9	14.9	14.9	15.0	16.9	16.9	16.9	17.0
		HI PR	256	257	259	263	296	297	299	303	337	338	340	345	382	383	385	389	430	432	433	438	482	483	485	489
		LO PR	126	128	131	136	134	135	138	144	140	142	145	150	146	147	150	156	151	153	156	161	158	159	163	168
	1400	MBh	41.5	42.0	43.2	45.0	41.1	41.7	42.9	44.7	40.1	40.6	41.8	43.6	38.3	38.9	40.0	41.9	36.1	36.7	37.9	39.7	34.1	34.7	35.9	37.7
		S/T	1.00	0.97	0.83	0.69	1.00	1.00	0.84	0.69	1.00	1.00	0.86	0.72	1.00	1.00	0.88	0.74	1.00	1.00	0.90	0.76	1.00	1.00	1.00	0.81
		ΔT	29	27	24	21	29	27	24	21	29	28	24	21	29	27	24	20	29	27	24	20	30	28	25	21
		kW	2.46	2.46	2.45	2.47	2.74	2.73	2.73	2.75	3.04	3.04	3.04	3.06	3.38	3.38	3.37	3.39	3.75	3.75	3.75	3.77	4.19	4.19	4.19	4.21
		Amps	9.0	9.0	9.0	9.1	10.3	10.3	10.3	10.4	11.7	11.7	11.7	11.8	13.2	13.2	13.2	13.3	15.0	15.0	14.9	15.0	17.0	17.0	16.9	17.0
		HI PR	257	258	260	264	297	298	300	304	339	340	341	346	383	384	386	391	432	433	435	439	483	484	486	491
		LO PR	128	129	132	137	135	137	140	145	142	143	146	151	147	149	152	157	152	154	157	162	159	161	164	169
	1575	MBh	42.2	42.8	44.0	45.8	41.9	42.4	43.6	45.4	40.8	41.4	42.6	44.4	39.1	39.6	40.8	42.6	36.9	37.4	38.6	40.4	34.9	35.4	36.6	38.4
		S/T	1.00	0.99	0.85	0.71	1.00	1.00	0.86	0.71	1.00	1.00	0.88	0.74	1.00	1.00	0.90	0.76	1.00	1.00	1.00	0.78	1.00	1.00	1.00	0.83
		ΔT	28	26	23	20	28	26	23	20	28	27	23	20	28	26	23	20	28	26	23	19	29	27	24	20
		kW	2.47	2.47	2.46	2.48	2.75	2.74	2.74	2.76	3.06	3.05	3.05	3.07	3.39	3.39	3.38	3.41	3.77	3.76	3.76	3.78	4.21	4.20	4.20	4.22
		Amps	9.1	9.1	9.1	9.1	10.4	10.3	10.3	10.4	11.8	11.8	11.7	11.8	13.3	13.3	13.3	13.4	15.0	15.0	15.0	15.1	17.0	17.0	17.0	17.1
		HI PR	259	261	262	267	299	300	302	306	341	342	344	348	386	387	389	393	434	435	437	441	486	487	488	493
		LO PR	130	131	135	140	137	139	142	147	144	145	148	154	149	151	154	159	155	156	159	165	162	163	166	171

IDB: Entering Indoor Dry Bulb Temperature

High and low pressures are measured at the liquid and suction service valves.

Shaded area reflects AHRI Rating Conditions.

kW = Total system power

Amps = Outdoor unit amps (compressor + fan)

			Outdoor Ambient Temperature																							
			65ºF				75ºF				85ºF				95ºF				105ºF				115ºF			
			Entering Indoor Wet Bulb Temperature																							
IDB	Airflow		59	63	67	71	59	63	67	71	59	63	67	71	59	63	67	71	59	63	67	71	59	63	67	71
70	1400	MBh	45.9	46.5	47.9	-	45.5	46.1	47.5	-	44.3	44.9	46.3	-	42.2	42.9	44.2	-	39.7	40.4	41.7	-	37.4	38.1	39.4	-
		S/T	0.64	0.56	0.42	-	0.65	0.57	0.43	-	0.67	0.59	0.45	-	0.69	0.61	0.47	-	1.00	0.64	0.50	-	1.00	0.69	0.55	-
		ΔT	19	17	14	-	19	17	14	-	19	17	14	-	19	17	14	-	19	17	14	-	20	18	15	-
		kW	2.79	2.78	2.78	-	3.11	3.10	3.10	-	3.46	3.46	3.46	-	3.85	3.85	3.84	-	4.28	4.28	4.28	-	4.79	4.79	4.78	-
		Amps	10.2	10.2	10.2	-	11.7	11.7	11.6	-	13.3	13.3	13.3	-	15.1	15.1	15.0	-	17.1	17.0	17.0	-	19.4	19.4	19.3	-
		HI PR	256	257	259	-	296	297	299	-	338	339	341	-	384	385	387	-	433	434	436	-	485	486	488	-
		LO PR	122	124	127	-	130	131	134	-	136	138	141	-	142	143	146	-	147	149	152	-	154	156	159	-
	1560	MBh	46.4	47.0	48.4	-	46.0	46.6	48.0	-	44.8	45.4	46.8	-	42.7	43.4	44.7	-	40.2	40.9	42.2	-	37.9	38.6	39.9	-
		S/T	0.69	0.61	0.47	-	0.69	0.62	0.48	-	0.72	0.64	0.50	-	1.00	0.66	0.52	-	1.00	0.69	0.54	-	1.00	0.74	0.60	-
		ΔT	18	16	13	-	18	16	13	-	18	16	13	-	18	16	13	-	18	16	13	-	19	17	14	-
		kW	2.80	2.80	2.79	-	3.12	3.12	3.11	-	3.48	3.48	3.47	-	3.87	3.86	3.86	-	4.30	4.30	4.29	-	4.80	4.80	4.80	-
		Amps	10.3	10.3	10.2	-	11.7	11.7	11.7	-	13.4	13.4	13.3	-	15.1	15.1	15.1	-	17.1	17.1	17.1	-	19.4	19.4	19.4	-
		HI PR	258	259	260	-	298	299	301	-	340	341	343	-	386	387	388	-	435	436	437	-	487	488	490	-
		LO PR	124	125	129	-	131	133	136	-	138	139	142	-	143	145	148	-	149	150	153	-	155	157	160	-
	1800	MBh	47.3	47.9	49.3	-	46.9	47.5	48.9	-	45.7	46.3	47.7	-	43.6	44.3	45.6	-	41.1	41.8	43.1	-	38.8	39.5	40.8	-
		S/T	0.73	0.65	0.51	-	0.73	0.66	0.52	-	0.76	0.68	0.54	-	1.00	0.70	0.56	-	1.00	0.72	0.58	-	1.00	0.78	0.64	-
		ΔT	17	15	12	-	17	15	12	-	17	15	12	-	17	15	12	-	17	15	12	-	18	16	13	-
		kW	2.82	2.81	2.81	-	3.14	3.14	3.13	-	3.50	3.49	3.49	-	3.88	3.88	3.87	-	4.31	4.31	4.31	-	4.82	4.82	4.81	-
		Amps	10.3	10.3	10.3	-	11.8	11.8	11.8	-	13.4	13.4	13.4	-	15.2	15.2	15.2	-	17.2	17.2	17.2	-	19.5	19.5	19.5	-
		HI PR	260	261	263	-	300	302	303	-	343	344	346	-	388	389	391	-	437	438	440	-	489	491	492	-
		LO PR	126	128	131	-	134	135	138	-	140	142	145	-	146	147	150	-	151	153	156	-	158	159	163	-
75	1400	MBh	45.9	46.6	47.9	50.0	45.5	46.1	47.5	49.6	44.3	45.0	46.3	48.4	42.2	42.9	44.3	46.4	39.7	40.4	41.7	43.8	37.4	38.1	39.5	41.5
		S/T	0.77	0.69	0.55	0.41	0.78	0.70	0.56	0.41	1.00	0.73	0.59	0.44	1.00	0.75	0.61	0.46	1.00	0.77	0.63	0.48	1.00	1.00	0.68	0.54
		ΔT	23	21	18	14	23	21	18	14	23	21	18	14	23	21	18	14	22	21	17	14	24	22	19	15
		kW	2.79	2.78	2.78	2.80	3.11	3.10	3.10	3.12	3.46	3.46	3.45	3.48	3.85	3.85	3.84	3.87	4.28	4.28	4.27	4.30	4.79	4.79	4.78	4.81
		Amps	10.2	10.2	10.2	10.3	11.7	11.6	11.6	11.7	13.3	13.3	13.3	13.4	15.1	15.1	15.0	15.1	17.0	17.0	17.0	17.1	19.4	19.4	19.3	19.4
		HI PR	256	257	259	263	296	297	299	304	339	340	341	346	384	385	387	391	433	434	436	440	485	486	488	493
		LO PR	122	124	127	132	130	131	134	140	136	138	141	146	142	143	146	152	147	149	152	157	154	156	159	164
	1560	MBh	46.4	47.1	48.4	50.5	46.0	46.6	48.0	50.1	44.8	45.5	46.8	48.9	42.7	**43.4**	44.8	46.9	40.2	40.9	42.2	44.3	37.9	38.6	40.0	42.0
		S/T	0.82	0.74	0.60	0.46	0.83	0.75	0.61	0.46	1.00	0.78	0.64	0.49	1.00	**0.80**	0.66	0.51	1.00	0.82	0.68	0.53	1.00	1.00	0.73	0.58
		ΔT	22	20	17	13	22	20	17	13	22	20	17	14	22	**20**	17	13	22	20	17	13	23	21	18	14
		kW	2.80	2.80	2.79	2.81	3.12	3.12	3.11	3.14	3.48	3.47	3.47	3.49	3.86	**3.86**	3.86	3.88	4.30	4.29	4.29	4.31	4.80	4.80	4.79	4.82
		Amps	10.3	10.2	10.2	10.3	11.7	11.7	11.7	11.8	13.4	13.3	13.3	13.4	15.1	**15.1**	15.1	15.2	17.1	17.1	17.1	17.2	19.4	19.4	19.4	19.5
		HI PR	258	259	261	265	298	299	301	305	340	341	343	348	386	**387**	389	393	435	436	438	442	487	488	490	494
		LO PR	124	125	129	134	131	133	136	141	138	139	142	148	143	**145**	148	153	149	150	153	159	156	157	160	165
	1800	MBh	47.3	48.0	49.3	51.4	46.9	47.6	48.9	51.0	45.7	46.4	47.7	49.8	43.7	44.3	45.7	47.8	41.1	41.8	43.2	45.2	38.8	39.5	40.9	43.0
		S/T	0.86	0.78	0.64	0.50	1.00	0.79	0.65	0.50	1.00	0.82	0.68	0.53	1.00	0.84	0.70	0.55	1.00	0.86	0.72	0.57	1.00	1.00	0.77	0.62
		ΔT	21	19	16	12	21	19	16	12	21	19	16	13	21	19	16	12	21	19	15	12	22	20	17	13
		kW	2.82	2.81	2.81	2.83	3.14	3.13	3.13	3.15	3.49	3.49	3.49	3.51	3.88	3.88	3.87	3.90	4.31	4.31	4.30	4.33	4.82	4.82	4.81	4.84
		Amps	10.3	10.3	10.3	10.4	11.8	11.8	11.8	11.9	13.4	13.4	13.4	13.5	15.2	15.2	15.2	15.3	17.2	17.2	17.1	17.3	19.5	19.5	19.5	19.6
		HI PR	260	261	263	268	301	302	304	308	343	344	346	350	388	389	391	396	437	438	440	445	490	491	493	497
		LO PR	126	128	131	136	134	135	138	144	140	142	145	150	146	147	150	156	151	153	156	161	158	159	163	168

IDB: Entering Indoor Dry Bulb Temperature

High and low pressures are measured at the liquid and suction service valves.

Shaded area reflects ACCA (TVA) Rating Conditions.

kW = Total system power

Amps = Outdoor unit amps (compressor + fan)

			Outdoor Ambient Temperature																							
			65ºF				75ºF				85ºF				95ºF				105ºF				115ºF			
			Entering Indoor Wet Bulb Temperature																							
IDB	Airflow		59	63	67	71	59	63	67	71	59	63	67	71	59	63	67	71	59	63	67	71	59	63	67	71
80	1400	MBh	46.1	46.8	48.2	50.2	45.7	46.4	47.8	49.8	44.5	45.2	46.6	48.6	42.5	43.1	44.5	46.6	40.0	40.6	42.0	44.1	37.7	38.3	39.7	41.8
		S/T	1.00	0.82	0.68	0.54	1.00	0.83	0.69	0.54	1.00	0.86	0.72	0.57	1.00	0.88	0.74	0.59	1.00	1.00	0.76	0.61	1.00	1.00	0.81	0.66
		Delta T	27	25	22	18	27	25	22	18	27	25	22	18	27	25	22	18	26	25	21	18	27	26	22	19
		KW	2.79	2.78	2.78	2.80	3.11	3.10	3.10	3.12	3.46	3.46	3.46	3.48	3.85	3.85	3.84	3.87	4.28	4.28	4.28	4.30	4.79	4.79	4.78	4.81
		AMPS	10.2	10.2	10.2	10.3	11.7	11.7	11.6	11.7	13.3	13.3	13.3	13.4	15.1	15.1	15.0	15.1	17.1	17.0	17.0	17.1	19.4	19.4	19.3	19.4
		HI PR	256	258	259	264	297	298	300	304	339	340	342	346	384	386	387	392	433	435	436	441	486	487	489	493
		LO PR	123	124	128	133	130	132	135	140	137	138	142	147	142	144	147	152	148	149	152	158	155	156	159	164
	1560	MBh	46.6	47.3	48.7	50.8	46.2	46.9	48.3	50.3	45.0	45.7	47.1	49.1	43.0	43.6	**45.0**	47.1	40.5	41.1	42.5	44.6	38.2	38.8	40.2	42.3
		S/T	1.00	0.87	0.73	0.59	1.00	0.88	0.74	0.59	1.00	0.91	0.77	0.62	1.00	1.00	**0.79**	0.64	1.00	1.00	0.81	0.66	1.00	1.00	0.86	0.71
		Delta T	26	24	21	17	26	24	21	17	26	24	21	18	26	24	**21**	17	26	24	20	17	27	25	22	18
		KW	2.80	2.80	2.79	2.82	3.12	3.12	3.11	3.14	3.48	3.48	3.47	3.49	3.86	3.86	**3.86**	3.88	4.30	4.29	4.29	4.31	4.80	4.80	4.80	4.82
		AMPS	10.3	10.2	10.2	10.3	11.7	11.7	11.7	11.8	13.4	13.4	13.3	13.4	15.1	15.1	**15.1**	15.2	17.1	17.1	17.1	17.2	19.4	19.4	19.4	19.5
		HI PR	258	259	261	266	299	300	301	306	341	342	344	348	386	387	**389**	394	435	436	438	443	488	489	490	495
		LO PR	124	126	129	134	132	133	136	142	138	140	143	148	144	145	**149**	154	149	151	154	159	156	158	161	166
	1800	MBh	47.6	48.2	49.6	51.7	47.1	47.8	49.2	51.2	46.0	46.6	48.0	50.1	43.9	44.5	45.9	48.0	41.4	42.0	43.4	45.5	39.1	39.7	41.1	43.2
		S/T	1.00	0.91	0.77	0.62	1.00	0.92	0.78	0.63	1.00	0.95	0.80	0.66	1.00	1.00	0.82	0.68	1.00	1.00	0.85	0.70	1.00	1.00	0.90	0.75
		Delta T	25	23	20	16	25	23	20	16	25	23	20	16	25	23	20	16	24	23	19	16	26	24	20	17
		KW	2.82	2.81	2.81	2.83	3.14	3.13	3.13	3.15	3.49	3.49	3.49	3.51	3.88	3.88	3.87	3.90	4.31	4.31	4.31	4.33	4.82	4.82	4.81	4.84
		AMPS	10.3	10.3	10.3	10.4	11.8	11.8	11.8	11.9	13.4	13.4	13.4	13.5	15.2	15.2	15.2	15.3	17.2	17.2	17.2	17.3	19.5	19.5	19.5	19.6
		HI PR	261	262	264	268	301	302	304	308	343	344	346	351	389	390	392	396	438	439	441	445	490	491	493	498
		LO PR	127	128	132	137	134	136	139	144	141	142	145	151	146	148	151	156	152	153	156	162	159	160	163	168
85	1400	MBh	46.9	47.6	48.9	51.0	46.5	47.2	48.5	50.6	45.3	46.0	47.3	49.4	43.3	43.9	45.3	47.4	40.7	41.4	42.8	44.8	38.4	39.1	40.5	42.6
		S/T	1.00	0.93	0.79	0.64	1.00	0.94	0.80	0.65	1.00	1.00	0.82	0.67	1.00	1.00	0.84	0.69	1.00	1.00	0.86	0.72	1.00	1.00	1.00	0.77
		Delta T	30	28	25	22	30	28	25	22	30	29	25	22	30	28	25	22	30	28	25	21	31	29	26	22
		KW	2.79	2.79	2.78	2.81	3.11	3.11	3.11	3.13	3.47	3.47	3.46	3.49	3.86	3.86	3.85	3.87	4.29	4.29	4.28	4.31	4.80	4.79	4.79	4.81
		AMPS	10.2	10.2	10.2	10.3	11.7	11.7	11.7	11.8	13.3	13.3	13.3	13.4	15.1	15.1	15.1	15.2	17.1	17.1	17.0	17.2	19.4	19.4	19.4	19.5
		HI PR	258	259	261	265	298	299	301	305	340	341	343	348	386	387	389	393	435	436	438	442	487	488	490	494
		LO PR	125	126	129	135	132	134	137	142	139	140	143	149	144	146	149	154	150	151	154	159	156	158	161	166
	1560	MBh	47.4	48.1	49.4	51.5	47.0	47.7	49.0	51.1	45.8	46.5	47.8	49.9	43.8	44.4	45.8	47.9	41.2	41.9	43.3	45.3	38.9	39.6	41.0	43.1
		S/T	1.00	0.98	0.84	0.69	1.00	0.98	0.84	0.70	1.00	1.00	0.87	0.72	1.00	1.00	0.89	0.74	1.00	1.00	0.91	0.77	1.00	1.00	1.00	0.82
		Delta T	29	28	24	21	29	27	24	21	30	28	24	21	29	27	24	21	29	27	24	21	30	28	25	22
		KW	2.81	2.80	2.80	2.82	3.13	3.12	3.12	3.14	3.48	3.48	3.48	3.50	3.87	3.87	3.86	3.89	4.30	4.30	4.30	4.32	4.81	4.81	4.80	4.83
		AMPS	10.3	10.3	10.3	10.4	11.8	11.7	11.7	11.8	13.4	13.4	13.4	13.5	15.2	15.2	15.1	15.2	17.1	17.1	17.1	17.2	19.5	19.5	19.4	19.5
		HI PR	259	261	262	267	300	301	303	307	342	343	345	349	387	389	390	395	436	438	439	444	489	490	492	496
		LO PR	126	128	131	136	134	135	138	144	140	142	145	150	146	147	150	156	151	153	156	161	158	159	162	168
	1800	MBh	48.3	49.0	50.3	52.4	47.9	48.6	49.9	52.0	46.7	47.4	48.7	50.8	44.7	45.3	46.7	48.8	42.2	42.8	44.2	46.3	39.9	40.5	41.9	44.0
		S/T	1.00	1.00	0.88	0.73	1.00	1.00	0.88	0.74	1.00	1.00	0.91	0.76	1.00	1.00	0.93	0.78	1.00	1.00	0.95	0.80	1.00	1.00	1.00	0.86
		Delta T	28	26	23	20	28	26	23	20	28	27	23	20	28	26	23	20	28	26	23	19	29	27	24	21
		KW	2.82	2.82	2.82	2.84	3.14	3.14	3.14	3.16	3.50	3.50	3.49	3.52	3.89	3.89	3.88	3.90	4.32	4.32	4.31	4.34	4.83	4.82	4.82	4.84
		AMPS	10.4	10.4	10.3	10.4	11.8	11.8	11.8	11.9	13.5	13.5	13.4	13.5	15.2	15.2	15.2	15.3	17.2	17.2	17.2	17.3	19.5	19.5	19.5	19.6
		HI PR	262	263	265	269	302	303	305	310	345	346	347	352	390	391	393	397	439	440	442	446	491	492	494	499
		LO PR	129	130	133	139	136	138	141	146	143	144	147	153	148	150	153	158	154	155	158	163	160	162	165	170

IDB: Entering Indoor Dry Bulb Temperature

High and low pressures are measured at the liquid and suction service valves.

Shaded area reflects AHRI Rating Conditions.

kW = Total system power

Amps = Outdoor unit amps (compressor + fan)

			Outdoor Ambient Temperature																							
			65ºF				75ºF				85ºF				95ºF				105ºF				115ºF			
			Entering Indoor Wet Bulb Temperature																							
IDB	Airflow		59	63	67	71	59	63	67	71	59	63	67	71	59	63	67	71	59	63	67	71	59	63	67	71
70	1400	MBh	45.9	46.5	47.9	-	45.5	46.1	47.5	-	44.3	44.9	46.3	-	42.2	42.9	44.2	-	39.8	40.4	41.8	-	37.5	38.1	39.5	-
		S/T	0.66	0.59	0.45	-	0.67	0.59	0.46	-	0.69	0.62	0.48	-	0.71	0.64	0.50	-	1.00	0.66	0.52	-	1.00	0.71	0.57	-
		ΔT	19	17	14	-	19	17	14	-	19	17	14	-	19	17	14	-	19	17	13	-	20	18	15	-
		kW	2.69	2.69	2.69	-	3.01	3.01	3.00	-	3.36	3.36	3.35	-	3.74	3.74	3.73	-	4.16	4.16	4.15	-	4.66	4.66	4.65	-
		Amps	9.9	9.9	9.8	-	11.3	11.3	11.3	-	12.9	12.9	12.9	-	14.7	14.6	14.6	-	16.6	16.6	16.6	-	18.9	18.9	18.8	-
		HI PR	249	250	252	-	288	289	290	-	328	330	331	-	372	373	375	-	420	421	423	-	470	471	473	-
		LO PR	121	122	125	-	128	129	132	-	134	136	139	-	140	141	144	-	145	146	149	-	151	153	156	-
	1600	MBh	46.7	47.3	48.7	-	46.3	46.9	48.3	-	45.1	45.7	47.1	-	43.1	43.7	45.1	-	40.6	41.2	42.6	-	38.3	39.0	40.3	-
		S/T	0.70	0.62	0.49	-	0.70	0.63	0.49	-	0.73	0.65	0.52	-	0.75	0.67	0.54	-	1.00	0.69	0.56	-	1.00	0.75	0.61	-
		ΔT	18	16	13	-	18	16	13	-	18	16	13	-	18	16	13	-	18	16	12	-	19	17	13	-
		kW	2.71	2.71	2.70	-	3.02	3.02	3.02	-	3.37	3.37	3.37	-	3.75	3.75	3.75	-	4.18	4.18	4.17	-	4.68	4.67	4.67	-
		Amps	9.9	9.9	9.9	-	11.4	11.4	11.3	-	13.0	13.0	13.0	-	14.7	14.7	14.7	-	16.7	16.7	16.6	-	18.9	18.9	18.9	-
		HI PR	251	252	254	-	290	291	293	-	331	332	334	-	375	376	377	-	422	423	425	-	473	474	475	-
		LO PR	123	124	127	-	130	132	135	-	136	138	141	-	142	143	146	-	147	149	152	-	154	155	158	-
	1800	MBh	47.7	48.4	49.7	-	47.3	47.9	49.3	-	46.1	46.8	48.1	-	44.1	44.7	46.1	-	41.6	42.2	43.6	-	39.3	40.0	41.3	-
		S/T	0.71	0.63	0.50	-	0.71	0.64	0.50	-	0.74	0.66	0.53	-	1.00	0.68	0.55	-	1.00	0.70	0.57	-	1.00	0.75	0.62	-
		ΔT	17	15	12	-	17	15	12	-	17	15	12	-	17	15	12	-	17	15	11	-	18	16	13	-
		kW	2.72	2.72	2.71	-	3.04	3.03	3.03	-	3.39	3.39	3.38	-	3.77	3.77	3.76	-	4.19	4.19	4.18	-	4.69	4.69	4.68	-
		Amps	10.0	10.0	10.0	-	11.4	11.4	11.4	-	13.1	13.0	13.0	-	14.8	14.8	14.8	-	16.7	16.7	16.7	-	19.0	19.0	19.0	-
		HI PR	253	255	256	-	292	293	295	-	333	334	336	-	377	378	380	-	424	426	427	-	475	476	478	-
		LO PR	125	127	130	-	133	134	137	-	139	141	144	-	144	146	149	-	150	151	154	-	156	158	161	-
75	1400	MBh	45.9	46.5	47.9	50.0	45.5	46.1	47.5	49.5	44.3	44.9	46.3	48.4	42.3	**42.9**	44.3	46.3	39.8	40.4	41.8	43.8	37.5	38.2	39.5	41.6
		S/T	0.79	0.71	0.58	0.44	0.80	0.72	0.59	0.44	1.00	0.75	0.61	0.47	1.00	**0.76**	0.63	0.49	1.00	0.79	0.65	0.51	1.00	0.84	0.70	0.56
		ΔT	23	21	18	14	23	21	18	14	23	21	18	14	23	**21**	18	14	23	21	17	14	24	22	19	15
		kW	2.69	2.69	2.68	2.71	3.01	3.00	3.00	3.02	3.36	3.35	3.35	3.37	3.74	**3.73**	3.73	3.75	4.16	4.16	4.15	4.18	4.66	4.66	4.65	4.67
		Amps	9.9	9.9	9.8	9.9	11.3	11.3	11.3	11.4	12.9	12.9	12.9	13.0	14.6	**14.6**	14.6	14.7	16.6	16.6	16.6	16.7	18.9	18.9	18.8	18.9
		HI PR	249	250	252	256	288	289	291	295	329	330	331	336	373	**374**	375	380	420	421	423	427	470	472	473	478
		LO PR	121	122	125	130	128	129	132	137	134	136	139	144	140	**141**	144	149	145	146	149	154	151	153	156	161
	1600	MBh	46.7	47.4	48.7	50.8	46.3	47.0	48.3	50.4	45.1	45.8	47.1	49.2	43.1	**43.7**	45.1	47.2	40.6	41.3	42.6	44.7	38.3	39.0	40.3	42.4
		S/T	0.83	0.75	0.62	0.47	0.83	0.76	0.62	0.48	1.00	0.78	0.65	0.51	1.00	**0.80**	0.67	0.52	1.00	0.82	0.69	0.55	1.00	1.00	0.74	0.60
		ΔT	22	20	17	13	22	20	17	13	22	20	17	13	22	**20**	17	13	22	20	16	13	23	21	18	14
		kW	2.71	2.70	2.70	2.72	3.02	3.02	3.01	3.04	3.37	3.37	3.36	3.39	3.75	**3.75**	3.74	3.77	4.18	4.17	4.17	4.19	4.67	4.67	4.67	4.69
		Amps	9.9	9.9	9.9	10.0	11.4	11.4	11.3	11.4	13.0	13.0	12.9	13.1	14.7	**14.7**	14.7	14.8	16.7	16.6	16.6	16.7	18.9	18.9	18.9	19.0
		HI PR	251	252	254	258	290	291	293	297	331	332	334	338	375	**376**	378	382	422	423	425	429	473	474	476	480
		LO PR	123	124	127	132	130	132	135	140	137	138	141	146	142	**143**	146	151	147	149	152	157	154	155	158	163
	1800	MBh	47.7	48.4	49.7	51.8	47.3	48.0	49.3	51.4	46.2	46.8	48.1	50.2	44.1	**44.8**	46.1	48.2	41.6	42.3	43.6	45.7	39.4	40.0	41.4	43.4
		S/T	0.83	0.76	0.62	0.48	0.84	0.76	0.63	0.49	1.00	0.79	0.65	0.51	1.00	**0.81**	0.67	0.53	1.00	0.83	0.70	0.55	1.00	1.00	0.75	0.61
		ΔT	21	19	16	12	21	19	16	12	21	19	16	12	21	**19**	16	12	21	19	15	12	22	20	17	13
		kW	2.72	2.72	2.71	2.74	3.03	3.03	3.03	3.05	3.39	3.38	3.38	3.40	3.77	**3.76**	3.76	3.78	4.19	4.19	4.18	4.21	4.69	4.69	4.68	4.70
		Amps	10.0	10.0	10.0	10.1	11.4	11.4	11.4	11.5	13.0	13.0	13.0	13.1	14.8	**14.8**	14.7	14.9	16.7	16.7	16.7	16.8	19.0	19.0	19.0	19.1
		HI PR	254	255	257	261	293	294	295	300	333	334	336	341	377	**378**	380	384	425	426	427	432	475	476	478	482
		LO PR	126	127	130	135	133	134	137	142	139	141	144	149	144	**146**	149	154	150	151	154	159	156	158	161	166

IDB: Entering Indoor Dry Bulb Temperature

High and low pressures are measured at the liquid and suction service valves.

Shaded area reflects ACCA (TVA) Rating Conditions.

kW = Total system power

Amps = Outdoor unit amps (compressor + fan)

Expanded Cooling Data — GSZ140491K* + ARUF49C14** + TXV (cont.)

			Outdoor Ambient Temperature																							
			65ºF				75ºF				85ºF				95ºF				105ºF				115ºF			
			Entering Indoor Wet Bulb Temperature																							
IDB	Airflow		59	63	67	71	59	63	67	71	59	63	67	71	59	63	67	71	59	63	67	71	59	63	67	71
80	1400	MBh	46.1	46.8	48.1	50.2	45.7	46.4	47.7	49.8	44.5	45.2	46.5	48.6	42.5	43.1	**44.5**	46.6	40.0	40.7	42.0	44.1	37.8	38.4	39.7	41.8
		S/T	0.91	0.84	0.70	0.56	1.00	0.84	0.71	0.57	1.00	0.87	0.73	0.59	1.00	0.89	**0.75**	0.61	1.00	1.00	0.78	0.63	1.00	1.00	0.83	0.69
		ΔT	27	25	22	18	27	25	22	18	27	26	22	19	27	25	**22**	18	27	25	22	18	28	26	23	19
		kW	2.69	2.69	2.69	2.71	3.01	3.01	3.00	3.02	3.36	3.36	3.35	3.37	3.74	3.74	**3.73**	3.75	4.16	4.16	4.15	4.18	4.66	4.66	4.65	4.68
		Amps	9.9	9.9	9.8	9.9	11.3	11.3	11.3	11.4	12.9	12.9	12.9	13.0	14.7	14.6	**14.6**	14.7	16.6	16.6	16.6	16.7	18.9	18.9	18.8	18.9
		HI PR	249	250	252	257	288	289	291	295	329	330	332	336	373	374	**376**	380	420	421	423	427	471	472	474	478
		LO PR	121	123	126	131	128	130	133	138	135	136	139	144	140	142	**145**	150	145	147	150	155	152	153	156	162
	1600	MBh	47.0	47.6	48.9	51.0	46.6	47.2	48.5	50.6	45.4	46.0	47.4	49.4	43.3	44.0	45.3	47.4	40.8	41.5	42.8	44.9	38.6	39.2	40.6	42.6
		S/T	1.00	0.88	0.74	0.60	1.00	0.88	0.75	0.60	1.00	0.91	0.77	0.63	1.00	0.93	0.79	0.65	1.00	1.00	0.81	0.67	1.00	1.00	0.86	0.72
		ΔT	26	24	21	17	26	24	21	17	26	25	21	17	26	24	21	17	26	24	21	17	27	25	22	18
		kW	2.71	2.71	2.70	2.72	3.02	3.02	3.02	3.04	3.37	3.37	3.37	3.39	3.75	3.75	3.75	3.77	4.18	4.18	4.17	4.19	4.68	4.67	4.67	4.69
		Amps	9.9	9.9	9.9	10.0	11.4	11.4	11.3	11.5	13.0	13.0	13.0	13.1	14.7	14.7	14.7	14.8	16.7	16.7	16.6	16.7	18.9	18.9	18.9	19.0
		HI PR	252	253	255	259	291	292	293	298	331	333	334	339	375	376	378	382	423	424	426	430	473	474	476	480
		LO PR	123	125	128	133	131	132	135	140	137	138	142	147	142	144	147	152	148	149	152	157	154	156	159	164
	1800	MBh	48.0	48.6	50.0	52.0	47.6	48.2	49.6	51.6	46.4	47.0	48.4	50.4	44.4	45.0	46.3	48.4	41.9	42.5	43.9	45.9	39.6	40.2	41.6	43.7
		S/T	1.00	0.88	0.75	0.61	1.00	0.89	0.75	0.61	1.00	0.91	0.78	0.64	1.00	1.00	0.80	0.66	1.00	1.00	0.82	0.68	1.00	1.00	0.87	0.73
		ΔT	25	23	20	16	25	23	20	16	25	24	20	17	25	23	20	16	25	23	20	16	26	24	21	17
		kW	2.72	2.72	2.71	2.74	3.04	3.03	3.03	3.05	3.39	3.39	3.38	3.40	3.77	3.76	3.76	3.78	4.19	4.19	4.18	4.21	4.69	4.69	4.68	4.71
		Amps	10.0	10.0	10.0	10.1	11.4	11.4	11.4	11.5	13.1	13.0	13.0	13.1	14.8	14.8	14.8	14.9	16.7	16.7	16.7	16.8	19.0	19.0	19.0	19.1
		HI PR	254	255	257	261	293	294	296	300	334	335	337	341	378	379	381	385	425	426	428	432	476	477	478	483
		LO PR	126	128	131	136	133	135	138	143	140	141	144	149	145	146	149	155	150	152	155	160	157	158	161	166
85	1400	MBh	46.9	47.5	48.9	50.9	46.5	47.1	48.5	50.5	45.3	45.9	47.3	49.4	43.3	43.9	45.3	47.3	40.8	41.4	42.8	44.8	38.5	39.2	40.5	42.6
		S/T	1.00	0.94	0.80	0.66	1.00	0.95	0.81	0.67	1.00	1.00	0.84	0.69	1.00	1.00	0.85	0.71	1.00	1.00	0.88	0.73	1.00	1.00	0.93	0.79
		ΔT	31	29	26	22	31	29	26	22	31	29	26	22	31	29	26	22	31	29	25	22	32	30	26	23
		kW	2.70	2.70	2.69	2.72	3.01	3.01	3.01	3.03	3.36	3.36	3.36	3.38	3.74	3.74	3.74	3.76	4.17	4.17	4.16	4.18	4.67	4.66	4.66	4.68
		Amps	9.9	9.9	9.9	10.0	11.3	11.3	11.3	11.4	12.9	12.9	12.9	13.0	14.7	14.7	14.6	14.8	16.6	16.6	16.6	16.7	18.9	18.9	18.9	19.0
		HI PR	251	252	253	258	290	291	292	297	330	331	333	337	374	375	377	381	422	423	424	429	472	473	475	479
		LO PR	123	124	128	133	130	132	135	140	137	138	141	146	142	143	146	151	147	149	152	157	154	155	158	163
	1600	MBh	47.7	48.4	49.7	51.8	47.3	48.0	49.3	51.4	46.1	46.8	48.1	50.2	44.1	44.7	46.1	48.2	41.6	42.3	43.6	45.7	39.3	40.0	41.3	43.4
		S/T	1.00	0.98	0.84	0.70	1.00	0.98	0.85	0.71	1.00	1.00	0.87	0.73	1.00	1.00	0.89	0.75	1.00	1.00	0.91	0.77	1.00	1.00	1.00	0.82
		ΔT	30	28	25	21	30	28	24	21	30	28	25	21	30	28	24	21	30	28	24	21	31	29	25	22
		kW	2.71	2.71	2.71	2.73	3.03	3.03	3.02	3.05	3.38	3.38	3.37	3.40	3.76	3.76	3.75	3.78	4.18	4.18	4.18	4.20	4.68	4.68	4.67	4.70
		Amps	10.0	10.0	9.9	10.0	11.4	11.4	11.4	11.5	13.0	13.0	13.0	13.1	14.8	14.7	14.7	14.8	16.7	16.7	16.7	16.8	19.0	19.0	18.9	19.0
		HI PR	253	254	256	260	292	293	295	299	333	334	335	340	377	378	379	384	424	425	427	431	474	475	477	481
		LO PR	125	127	130	135	132	134	137	142	139	140	143	148	144	146	149	154	149	151	154	159	156	157	161	166
	1800	MBh	48.7	49.4	50.7	52.8	48.3	49.0	50.3	52.4	47.2	47.8	49.1	51.2	45.1	45.8	47.1	49.2	42.6	43.3	44.6	46.7	40.4	41.0	42.4	44.4
		S/T	1.00	0.98	0.85	0.71	1.00	1.00	0.85	0.71	1.00	1.00	0.88	0.74	1.00	1.00	0.90	0.76	1.00	1.00	0.92	0.78	1.00	1.00	1.00	0.83
		ΔT	29	27	24	20	29	27	24	20	29	27	24	20	29	27	23	20	29	27	23	20	30	28	24	21
		kW	2.73	2.73	2.72	2.74	3.04	3.04	3.03	3.06	3.39	3.39	3.39	3.41	3.77	3.77	3.77	3.79	4.20	4.19	4.19	4.21	4.70	4.69	4.69	4.71
		Amps	10.0	10.0	10.0	10.1	11.5	11.5	11.4	11.5	13.1	13.1	13.0	13.2	14.8	14.8	14.8	14.9	16.8	16.7	16.7	16.8	19.0	19.0	19.0	19.1
		HI PR	255	256	258	262	294	295	297	301	335	336	338	342	379	380	382	386	426	427	429	433	477	478	480	484
		LO PR	128	129	132	137	135	137	140	145	141	143	146	151	147	148	151	156	152	153	157	162	159	160	163	168

IDB: Entering Indoor Dry Bulb Temperature

High and low pressures are measured at the liquid and suction service valves.

Shaded area reflects AHRI Rating Conditions.

kW = Total system power

Amps = Outdoor unit amps (compressor + fan)

Expanded Cooling Data — GSZ140601K* + ASPT61D14** + TXV

			Outdoor Ambient Temperature																							
			65ºF				75ºF				85ºF				95ºF				105ºF				115ºF			
			Entering Indoor Wet Bulb Temperature																							
IDB	Airflow		59	63	67	71	59	63	67	71	59	63	67	71	59	63	67	71	59	63	67	71	59	63	67	71
70	1790	MBh	58.2	59.0	60.8	-	57.7	58.5	60.3	-	56.2	57.0	58.8	-	53.6	54.5	56.2	-	50.5	51.3	53.0	-	47.6	48.4	50.1	-
		S/T	0.67	0.59	0.46	-	0.67	0.60	0.46	-	0.70	0.62	0.49	-	0.72	0.64	0.51	-	0.74	0.67	0.53	-	1.00	0.72	0.58	-
		ΔT	19	17	14	-	19	17	14	-	19	17	14	-	19	17	14	-	19	17	13	-	20	18	14	-
		kW	3.35	3.35	3.34	-	3.78	3.78	3.77	-	4.25	4.25	4.24	-	4.76	4.76	4.75	-	5.34	5.33	5.33	-	6.01	6.00	6.00	-
		Amps	13.2	13.2	13.1	-	15.1	15.1	15.1	-	17.3	17.3	17.2	-	19.6	19.6	19.6	-	22.2	22.2	22.2	-	25.3	25.3	25.3	-
		HI PR	258	259	261	-	298	299	301	-	340	341	343	-	386	387	389	-	435	436	438	-	487	488	490	-
		LO PR	116	118	121	-	123	125	128	-	130	131	134	-	135	136	139	-	140	141	144	-	146	148	150	-
	2000	MBh	59.1	59.9	61.6	-	58.6	59.4	61.1	-	57.1	57.9	59.6	-	54.5	55.3	57.0	-	51.3	52.1	53.9	-	48.4	49.3	51.0	-
		S/T	0.70	0.62	0.49	-	0.71	0.63	0.49	-	0.73	0.66	0.52	-	0.75	0.68	0.54	-	0.77	0.70	0.56	-	1.00	0.75	0.61	-
		ΔT	18	16	13	-	18	16	13	-	18	16	13	-	18	16	13	-	18	16	12	-	19	17	14	-
		kW	3.37	3.37	3.36	-	3.80	3.79	3.79	-	4.27	4.27	4.26	-	4.78	4.78	4.77	-	5.35	5.35	5.34	-	6.03	6.02	6.01	-
		Amps	13.2	13.2	13.2	-	15.2	15.2	15.1	-	17.4	17.3	17.3	-	19.7	19.7	19.6	-	22.3	22.3	22.3	-	25.4	25.4	25.3	-
		HI PR	260	261	263	-	300	301	303	-	342	343	345	-	388	389	391	-	437	438	440	-	489	490	492	-
		LO PR	118	120	123	-	125	127	130	-	131	133	136	-	136	138	141	-	142	143	146	-	148	149	152	-
	2250	MBh	60.3	61.1	62.8	-	59.8	60.6	62.3	-	58.3	59.1	60.8	-	55.7	56.5	58.2	-	52.5	53.4	55.1	-	49.7	50.5	52.2	-
		S/T	0.71	0.64	0.50	-	0.72	0.64	0.51	-	0.75	0.67	0.53	-	0.76	0.69	0.55	-	1.00	0.71	0.57	-	1.00	0.76	0.63	-
		ΔT	17	15	12	-	17	15	12	-	17	15	12	-	17	15	12	-	17	15	11	-	18	16	13	-
		kW	3.39	3.39	3.38	-	3.81	3.81	3.80	-	4.29	4.28	4.28	-	4.80	4.80	4.79	-	5.37	5.37	5.36	-	6.04	6.04	6.03	-
		Amps	13.3	13.3	13.3	-	15.3	15.3	15.2	-	17.4	17.4	17.4	-	19.8	19.8	19.7	-	22.4	22.4	22.4	-	25.5	25.5	25.4	-
		HI PR	262	263	265	-	302	303	305	-	345	346	347	-	390	391	393	-	439	440	442	-	491	492	494	-
		LO PR	121	122	125	-	128	129	132	-	134	135	138	-	139	140	143	-	144	145	148	-	150	152	155	-
75	1790	MBh	58.3	59.1	60.8	63.4	57.8	58.6	60.3	62.9	56.3	57.1	58.8	61.4	53.7	**54.5**	56.2	58.8	50.5	51.3	53.0	55.7	47.6	48.4	50.2	52.8
		S/T	0.80	0.72	0.59	0.44	0.80	0.73	0.59	0.45	0.83	0.75	0.62	0.47	1.00	**0.77**	0.64	0.49	1.00	0.79	0.66	0.52	1.00	0.85	0.71	0.57
		ΔT	23	21	18	14	23	21	18	14	23	21	18	14	23	**21**	18	14	23	21	17	14	24	22	19	15
		kW	3.35	3.35	3.34	3.37	3.78	3.77	3.77	3.80	4.25	4.25	4.24	4.27	4.76	**4.76**	4.75	4.78	5.33	5.33	5.32	5.36	6.01	6.00	5.99	6.03
		Amps	13.2	13.1	13.1	13.3	15.1	15.1	15.0	15.2	17.3	17.2	17.2	17.4	19.6	**19.6**	19.6	19.7	22.2	22.2	22.2	22.3	25.3	25.3	25.2	25.4
		HI PR	258	259	261	265	298	299	301	306	340	341	343	348	386	**387**	389	393	435	436	438	442	487	488	490	495
		LO PR	116	118	121	126	123	125	128	133	130	131	134	139	135	**136**	139	144	140	141	144	149	146	148	150	155
	2000	MBh	59.1	59.9	61.6	64.3	58.6	59.4	61.1	63.8	57.1	57.9	59.6	62.3	54.5	**55.3**	57.0	59.7	51.4	52.2	53.9	56.5	48.5	49.3	51.0	53.6
		S/T	0.83	0.75	0.62	0.47	0.84	0.76	0.62	0.48	0.86	0.79	0.65	0.51	1.00	**0.81**	0.67	0.53	1.00	0.83	0.69	0.55	1.00	0.88	0.74	0.60
		ΔT	22	20	17	13	22	20	17	13	22	20	17	13	22	**20**	17	13	22	20	16	13	23	21	18	14
		kW	3.37	3.37	3.36	3.39	3.79	3.79	3.78	3.82	4.27	4.26	4.26	4.29	4.78	**4.78**	4.77	4.80	5.35	5.35	5.34	5.37	6.02	6.02	6.01	6.04
		Amps	13.2	13.2	13.2	13.3	15.2	15.2	15.1	15.3	17.3	17.3	17.3	17.4	19.7	**19.7**	19.6	19.8	22.3	22.3	22.3	22.4	25.4	25.4	25.3	25.5
		HI PR	260	261	263	267	300	301	303	307	342	343	345	350	388	**389**	391	395	437	438	440	444	489	490	492	497
		LO PR	118	120	123	127	125	127	130	134	131	133	136	141	136	**138**	141	146	142	143	146	151	148	149	152	157
	2250	MBh	60.3	61.1	62.9	65.5	59.8	60.6	62.3	65.0	58.3	59.1	60.8	63.5	55.7	**56.5**	58.3	60.9	52.6	53.4	55.1	57.7	49.7	50.5	52.2	54.9
		S/T	0.84	0.77	0.63	0.49	0.85	0.77	0.64	0.49	1.00	0.80	0.66	0.52	1.00	**0.82**	0.68	0.54	1.00	0.84	0.70	0.56	1.00	0.89	0.76	0.61
		ΔT	21	19	16	12	21	19	16	12	21	20	16	12	21	**19**	16	12	21	19	16	12	22	20	17	13
		kW	3.39	3.38	3.38	3.41	3.81	3.81	3.80	3.83	4.29	4.28	4.27	4.31	4.80	**4.79**	4.79	4.82	5.37	5.37	5.36	5.39	6.04	6.04	6.03	6.06
		Amps	13.3	13.3	13.3	13.4	15.3	15.2	15.2	15.4	17.4	17.4	17.4	17.5	19.8	**19.8**	19.7	19.9	22.4	22.4	22.3	22.5	25.5	25.4	25.4	25.6
		HI PR	262	263	265	270	303	304	305	310	345	346	348	352	390	**391**	393	398	439	440	442	447	492	493	495	499
		LO PR	121	122	125	130	128	129	132	137	134	135	138	143	139	**140**	143	148	144	145	148	153	150	152	155	160

IDB: Entering Indoor Dry Bulb Temperature

High and low pressures are measured at the liquid and suction service valves.

Shaded area reflects ACCA (TVA) Rating Conditions.

kW = Total system power

Amps = Outdoor unit amps (compressor + fan)

			Outdoor Ambient Temperature																							
			65ºF				75ºF				85ºF				95ºF				105ºF				115ºF			
			Entering Indoor Wet Bulb Temperature																							
IDB	Airflow		59	63	67	71	59	63	67	71	59	63	67	71	59	63	67	71	59	63	67	71	59	63	67	71
80	1790	MBh	58.6	59.4	61.1	63.7	58.1	58.9	60.6	63.2	56.6	57.4	59.1	61.7	54.0	54.8	**56.5**	59.1	50.8	51.6	53.3	56.0	47.9	48.7	50.5	53.1
		S/T	0.92	0.85	0.71	0.57	1.00	0.85	0.72	0.57	1.00	0.88	0.74	0.60	1.00	0.90	**0.76**	0.62	1.00	0.92	0.78	0.64	1.00	1.00	0.84	0.69
		ΔT	27	25	22	18	27	25	22	18	27	25	22	18	27	25	**22**	18	27	25	21	18	28	26	23	19
		kW	3.35	3.35	3.34	3.38	3.78	3.78	3.77	3.80	4.25	4.25	4.24	4.27	4.76	4.76	**4.75**	4.79	5.34	5.33	5.33	5.36	6.01	6.00	6.00	6.03
		Amps	13.2	13.1	13.1	13.3	15.1	15.1	15.1	15.2	17.3	17.3	17.2	17.4	19.6	19.6	**19.6**	19.7	22.2	22.2	22.2	22.3	25.3	25.3	25.3	25.4
		HI PR	258	259	261	266	299	300	302	306	341	342	344	348	386	387	**389**	394	435	436	438	443	488	489	491	495
		LO PR	117	118	121	126	124	125	128	133	130	131	134	139	135	137	**140**	144	140	142	145	150	147	148	151	156
	2000	MBh	59.4	60.2	61.9	64.6	58.9	59.7	61.4	64.1	57.4	58.2	59.9	62.6	54.8	55.6	57.3	60.0	51.7	52.5	54.2	56.8	48.8	49.6	51.3	53.9
		S/T	0.96	0.88	0.74	0.60	1.00	0.89	0.75	0.61	1.00	0.91	0.78	0.63	1.00	0.93	0.79	0.65	1.00	0.95	0.82	0.67	1.00	1.00	0.87	0.73
		ΔT	26	24	21	17	26	24	21	17	26	25	21	18	26	24	21	17	26	24	21	17	27	25	22	18
		kW	3.37	3.37	3.36	3.39	3.80	3.79	3.79	3.82	4.27	4.27	4.26	4.29	4.78	4.78	4.77	4.80	5.35	5.35	5.34	5.38	6.02	6.02	6.01	6.05
		Amps	13.2	13.2	13.2	13.3	15.2	15.2	15.1	15.3	17.4	17.3	17.3	17.5	19.7	19.7	19.6	19.8	22.3	22.3	22.3	22.4	25.4	25.4	25.3	25.5
		HI PR	260	261	263	268	301	302	304	308	343	344	346	350	388	389	391	396	437	438	440	445	490	491	493	497
		LO PR	119	120	123	128	126	127	130	135	132	133	136	141	137	138	141	146	142	143	146	151	148	150	153	158
	2250	MBh	60.6	61.4	63.2	65.8	60.1	60.9	62.6	65.3	58.6	59.4	61.1	63.8	56.0	56.8	58.6	61.2	52.9	53.7	55.4	58.0	50.0	50.8	52.5	55.1
		S/T	0.97	0.89	0.76	0.61	1.00	0.90	0.76	0.62	1.00	0.92	0.79	0.64	1.00	0.94	0.81	0.66	1.00	1.00	0.83	0.69	1.00	1.00	0.88	0.74
		ΔT	25	23	20	16	25	23	20	16	25	24	20	17	25	23	20	16	25	23	20	16	26	24	21	17
		kW	3.39	3.39	3.38	3.41	3.81	3.81	3.80	3.84	4.29	4.28	4.28	4.31	4.80	4.80	4.79	4.82	5.37	5.37	5.36	5.39	6.04	6.04	6.03	6.06
		Amps	13.3	13.3	13.3	13.4	15.3	15.3	15.2	15.4	17.4	17.4	17.4	17.5	19.8	19.8	19.7	19.9	22.4	22.4	22.3	22.5	25.5	25.5	25.4	25.6
		HI PR	263	264	266	270	303	304	306	310	345	346	348	353	391	392	394	398	440	441	443	447	492	493	495	499
		LO PR	121	123	125	130	128	129	132	137	134	136	139	143	139	141	144	149	144	146	149	154	151	152	155	160
85	1790	MBh	59.5	60.3	62.1	64.7	59.0	59.8	61.6	64.2	57.5	58.3	60.1	62.7	54.9	55.8	57.5	60.1	51.8	52.6	54.3	56.9	48.9	49.7	51.4	54.1
		S/T	1.00	0.95	0.81	0.67	1.00	0.96	0.82	0.68	1.00	0.98	0.84	0.70	1.00	1.00	0.86	0.72	1.00	1.00	0.89	0.74	1.00	1.00	0.94	0.79
		ΔT	31	29	25	22	31	29	25	22	31	29	26	22	31	29	25	22	30	29	25	22	32	30	26	23
		kW	3.36	3.36	3.35	3.38	3.79	3.78	3.78	3.81	4.26	4.26	4.25	4.28	4.77	4.77	4.76	4.79	5.34	5.34	5.33	5.37	6.02	6.01	6.00	6.04
		Amps	13.2	13.2	13.2	13.3	15.1	15.1	15.1	15.2	17.3	17.3	17.3	17.4	19.7	19.6	19.6	19.8	22.3	22.3	22.2	22.4	25.3	25.3	25.3	25.4
		HI PR	260	261	262	267	300	301	303	307	342	343	345	349	388	389	390	395	437	438	439	444	489	490	492	496
		LO PR	119	120	123	128	126	127	130	135	132	133	136	141	137	138	141	146	142	143	146	151	148	150	153	158
	2000	MBh	60.4	61.2	62.9	65.5	59.9	60.7	62.4	65.0	58.4	59.2	60.9	63.5	55.8	56.6	58.3	60.9	52.6	53.4	55.2	57.8	49.7	50.6	52.3	54.9
		S/T	1.00	0.98	0.85	0.70	1.00	0.99	0.85	0.71	1.00	1.00	0.88	0.73	1.00	1.00	0.90	0.75	1.00	1.00	0.92	0.78	1.00	1.00	0.97	0.83
		ΔT	30	28	25	21	30	28	24	21	30	28	25	21	30	28	24	21	30	28	24	21	31	29	25	22
		kW	3.38	3.38	3.37	3.40	3.80	3.80	3.79	3.83	4.28	4.27	4.27	4.30	4.79	4.79	4.78	4.81	5.36	5.36	5.35	5.38	6.03	6.03	6.02	6.05
		Amps	13.3	13.3	13.2	13.4	15.2	15.2	15.2	15.3	17.4	17.4	17.3	17.5	19.7	19.7	19.7	19.8	22.4	22.3	22.3	22.5	25.4	25.4	25.4	25.5
		HI PR	261	263	264	269	302	303	305	309	344	345	347	351	390	391	392	397	439	440	441	446	491	492	494	498
		LO PR	120	122	125	130	127	129	132	137	134	135	138	143	139	140	143	148	144	145	148	153	150	152	154	159
	2250	MBh	61.6	62.4	64.1	66.8	61.1	61.9	63.6	66.2	59.6	60.4	62.1	64.7	57.0	57.8	59.5	62.2	53.8	54.7	56.4	59.0	51.0	51.8	53.5	56.1
		S/T	1.00	0.99	0.86	0.71	1.00	1.00	0.86	0.72	1.00	1.00	0.89	0.75	1.00	1.00	0.91	0.77	1.00	1.00	0.93	0.79	1.00	1.00	0.98	0.84
		ΔT	29	27	24	20	29	27	24	20	29	27	24	20	29	27	24	20	29	27	23	20	30	28	24	21
		kW	3.40	3.39	3.39	3.42	3.82	3.82	3.81	3.84	4.30	4.29	4.28	4.32	4.81	4.80	4.80	4.83	5.38	5.38	5.37	5.40	6.05	6.05	6.04	6.07
		Amps	13.4	13.3	13.3	13.5	15.3	15.3	15.3	15.4	17.5	17.5	17.4	17.6	19.8	19.8	19.8	19.9	22.4	22.4	22.4	22.5	25.5	25.5	25.5	25.6
		HI PR	264	265	267	271	304	305	307	312	346	348	349	354	392	393	395	399	441	442	444	448	493	494	496	501
		LO PR	123	124	127	132	130	131	134	139	136	137	140	145	141	142	145	150	146	148	150	155	153	154	157	162

IDB: Entering Indoor Dry Bulb Temperature

High and low pressures are measured at the liquid and suction service valves.

Shaded area reflects AHRI Rating Conditions.

kW = Total system power

Amps = Outdoor unit amps (compressor + fan)

GSZ140181K* - ARUF25B14 + TXV**

	Outdoor Ambient Temperature																
	65	60	55	50	47	45	40	35	30	25	20	17	15	10	5	0	-5
MBh	23.71	22.11	20.54	18.99	**18.00**	17.25	15.37	13.65	12.25	11.21	10.42	10.00	9.47	8.13	6.80	5.47	4.13
T/R	36.0	33.6	31.2	28.8	27.3	26.2	23.3	20.7	18.6	17.0	15.8	15.2	14.4	12.3	10.3	8.3	6.3
kW	1.51	1.48	1.45	1.42	**1.40**	1.39	1.36	1.33	1.30	1.27	1.24	1.22	1.21	1.18	1.15	1.12	1.09
Amps	7.2	6.6	6.1	5.7	5.5	5.3	5.0	4.7	4.4	4.2	4.0	3.8	3.8	3.5	3.3	3.0	2.7
COP	4.60	4.37	4.15	3.92	3.76	3.63	3.31	3.01	2.76	2.59	2.46	2.40	2.29	2.02	1.74	1.43	1.11

GSZ140191A* - ARUF25B14*+TXV

	Outdoor Ambient Temperature																
	65	60	55	50	47	45	40	35	30	25	20	17	15	10	5	0	-5
MBh	23.71	22.11	20.54	18.99	**18.00**	17.25	15.37	13.65	12.25	11.21	10.42	10.00	9.47	8.13	6.80	5.47	4.13
T/R	35.99	33.56	31.17	28.82	27.32	26.18	23.33	20.72	18.60	17.01	15.82	15.18	14.37	12.35	10.32	8.30	6.27
kW	1.63	1.57	1.50	1.44	**1.40**	1.37	1.30	1.24	1.17	1.11	1.04	1.00	0.98	0.91	0.85	0.78	0.71
Amps	7.1	6.6	6.1	5.7	5.4	5.3	5.0	4.7	4.4	4.2	4.0	3.8	3.7	3.5	3.3	3.0	2.7
COP	4.26	4.13	4.01	3.88	3.78	3.69	3.45	3.23	3.06	2.96	2.93	2.92	2.84	2.62	2.36	2.05	1.70

GSZ140241K* / ARUF25B14A*+TXV

	Outdoor Ambient Temperature																
	65	60	55	50	47	45	40	35	30	25	20	17	15	10	5	0	-5
MBh	30.74	28.63	26.55	24.50	**23.20**	22.20	19.70	17.43	15.59	14.20	13.16	12.60	11.89	10.13	8.36	6.59	4.83
T/R	32.7	30.5	28.3	26.1	24.7	23.6	21.0	18.6	16.6	15.1	14.0	13.4	12.7	10.8	8.9	7.0	5.1
kW	1.97	1.93	1.88	1.84	**1.81**	1.79	1.75	1.70	1.66	1.61	1.57	1.54	1.52	1.48	1.43	1.39	1.34
Amps	9.1	8.4	7.8	7.2	6.9	6.7	6.3	5.9	5.6	5.3	5.0	4.8	4.7	4.4	4.1	3.7	3.3
COP	4.57	4.36	4.14	3.91	3.76	3.63	3.31	3.00	2.76	2.58	2.46	2.40	2.29	2.01	1.71	1.39	1.05

GSZ140251A* - ARUF25B14*+TXV

	Outdoor Ambient Temperature																
	65	60	55	50	47	45	40	35	30	25	20	17	15	10	5	0	-5
MBh	29.87	28.00	26.17	24.36	**23.20**	22.36	20.21	18.21	16.57	15.36	14.48	14.00	13.39	11.85	10.32	8.79	7.25
T/R	32.16	30.15	28.17	26.23	24.98	24.07	21.76	19.60	17.84	16.54	15.58	15.07	14.41	12.76	11.11	9.46	7.81
kW	1.85	1.82	1.79	1.75	**1.74**	1.72	1.69	1.66	1.63	1.59	1.56	1.54	1.53	1.50	1.46	1.43	1.40
Amps	8.7	8.0	7.4	6.9	6.6	6.4	6.0	5.6	5.3	5.0	4.7	4.6	4.5	4.2	3.9	3.5	3.2
COP	4.73	4.51	4.29	4.07	3.92	3.80	3.50	3.22	2.99	2.83	2.72	2.66	2.57	2.32	2.07	1.80	1.52

Calculations are based on nominal CFM and 70°F indoor dry bulb.

Amps = Outdoor unit amps (comp.+fan)

Note: Shaded area is AHRI Rating Conditions at 47°F outdoor ambient temperature.

kW = Total system power

GSZ140301K* / ARUF29B14 + TXV**

	Outdoor Ambient Temperature																
	65	60	55	50	47	45	40	35	30	25	20	17	15	10	5	0	-5
MBh	37.15	34.70	32.29	29.92	**28.40**	27.27	24.40	21.77	19.62	18.03	16.84	16.20	15.39	13.35	11.32	9.29	7.25
T/R	39.5	36.9	34.4	31.8	30.2	29.0	26.0	23.2	20.9	19.2	17.9	17.2	16.4	14.2	12.0	9.9	7.7
kW	2.48	2.42	2.37	2.31	**2.27**	2.25	2.19	2.14	2.08	2.02	1.96	1.93	1.91	1.85	1.79	1.74	1.68
Amps	11.9	10.9	10.1	9.4	9.0	8.8	8.3	7.8	7.4	7.0	6.6	6.4	6.2	5.8	5.4	5.0	4.5
COP	4.39	4.20	4.00	3.80	3.66	3.55	3.26	2.99	2.77	2.61	2.51	2.46	2.36	2.12	1.85	1.57	1.27

GSZ140311A* - ARUF29B14*+TXV

	Outdoor Ambient Temperature																
	65	60	55	50	47	45	40	35	30	25	20	17	15	10	5	0	-5
MBh	39.73	37.29	34.88	32.52	**31.00**	29.90	27.11	24.49	22.34	20.77	19.62	19.00	18.20	16.20	14.20	12.20	10.20
T/R	42.28	39.68	37.13	34.61	32.99	31.82	28.85	26.06	23.78	22.10	20.88	20.22	19.37	17.24	15.11	12.98	10.86
kW	3.01	2.92	2.83	2.74	**2.69**	2.65	2.56	2.47	2.39	2.30	2.21	2.15	2.12	2.03	1.94	1.85	1.76
Amps	14.3	13.2	12.2	11.4	10.9	10.6	10.0	9.4	8.9	8.5	8.0	7.7	7.6	7.1	6.6	6.1	5.5
COP	3.87	3.74	3.61	3.47	3.38	3.30	3.10	2.90	2.75	2.65	2.61	2.59	2.52	2.34	2.15	1.93	1.70

GSZ140361K* / ARUF37C14 + TXV**

	Outdoor Ambient Temperature																
	65	60	55	50	47	45	40	35	30	25	20	17	15	10	5	0	-5
MBh	42.72	39.94	37.21	34.52	**32.80**	31.52	28.28	25.30	22.87	21.06	19.72	19.00	18.08	15.78	13.48	11.18	8.88
T/R	37.0	34.6	32.2	29.9	28.4	27.3	24.5	21.9	19.8	18.2	17.1	16.4	15.6	13.7	11.7	9.7	7.7
kW	2.81	2.76	2.71	2.66	**2.63**	2.61	2.56	2.50	2.45	2.40	2.35	2.32	2.30	2.25	2.20	2.15	2.10
Amps	13.6	12.5	11.6	10.8	10.3	10.0	9.4	8.9	8.4	7.9	7.5	7.3	7.1	6.6	6.2	5.7	5.1
COP	4.46	4.24	4.03	3.81	3.66	3.55	3.24	2.96	2.73	2.57	2.46	2.40	2.30	2.06	1.80	1.53	1.24

GSZ140371A* - ARUF37C14*+TXV

	Outdoor Ambient Temperature																
	65	60	55	50	47	45	40	35	30	25	20	17	15	10	5	0	-5
MBh	42.85	40.38	37.94	35.55	**34.00**	32.87	30.16	27.45	25.32	23.73	22.61	22.00	21.20	19.20	17.20	15.20	13.20
T/R	40.28	37.95	35.67	33.42	31.96	30.90	28.35	25.80	23.80	22.31	21.25	20.68	19.93	18.05	16.17	14.29	12.41
kW	2.75	2.71	2.67	2.64	**2.61**	2.60	2.56	2.52	2.48	2.44	2.40	2.38	2.37	2.33	2.29	2.25	2.21
Amps	13.7	12.6	11.6	10.8	10.4	10.1	9.5	9.0	8.5	8.0	7.6	7.3	7.2	6.7	6.3	5.8	5.2
COP	4.57	4.36	4.16	3.95	3.82	3.71	3.45	3.19	2.99	2.85	2.76	2.71	2.63	2.42	2.20	1.98	1.75

Calculations are based on nominal CFM and 70°F indoor dry bulb.

Amps = Outdoor unit amps (comp.+fan)

Note: Shaded area is AHRI Rating Conditions at 47°F outdoor ambient temperature.

kW = Total system power

GSZ140421K* / ARUF43C14 + TXV**

	Outdoor Ambient Temperature																
	65	60	55	50	47	45	40	35	30	25	20	17	15	10	5	0	-5
MBh	51.58	48.34	45.15	42.02	**40.00**	38.54	34.80	31.31	28.47	26.37	24.83	24.00	22.93	20.27	17.60	14.93	12.27
T/R	36.7	34.4	32.2	29.9	28.5	27.5	24.8	22.3	20.3	18.8	17.7	17.1	16.3	14.4	12.5	10.6	8.7
kW	3.41	3.34	3.27	3.21	**3.17**	3.14	3.08	3.01	2.94	2.88	2.81	2.77	2.74	2.68	2.61	2.54	2.48
Amps	16.4	15.1	14.0	13.0	12.4	12.1	11.4	10.7	10.1	9.5	9.0	8.7	8.5	8.0	7.4	6.8	6.1
COP	4.44	4.24	4.04	3.84	3.70	3.60	3.32	3.05	2.84	2.69	2.59	2.54	2.45	2.22	1.98	1.72	1.45

GSZ140481K* - ARUF61D14A*+TXV

	Outdoor Ambient Temperature																
	65	60	55	50	47	45	40	35	30	25	20	17	15	10	5	0	-5
MBh	56.58	53.20	49.88	46.61	**44.50**	42.97	39.18	35.56	32.58	30.41	28.84	28.00	26.90	24.15	21.40	18.65	15.90
T/R	33.7	31.7	29.7	27.8	26.5	25.6	23.3	21.2	19.4	18.1	17.2	16.7	16.0	14.4	12.7	11.1	9.5
kW	3.51	3.48	3.44	3.40	**3.38**	3.36	3.33	3.29	3.25	3.22	3.18	3.16	3.14	3.10	3.07	3.03	2.99
Amps	17.2	15.8	14.6	13.6	13.0	12.6	11.8	11.1	10.5	9.9	9.4	9.0	8.8	8.2	7.6	7.0	6.2
COP	4.72	4.49	4.25	4.02	3.86	3.74	3.45	3.17	2.94	2.77	2.66	2.60	2.51	2.28	2.04	1.80	1.56

GSZ140491K* - ARUF49C14A*+TXV

	Outdoor Ambient Temperature																
	65	60	55	50	47	45	40	35	30	25	20	17	15	10	5	0	-5
MBh	59.32	55.59	51.92	48.32	**46.00**	44.32	40.01	36.01	32.74	30.32	28.55	27.60	26.37	23.31	20.24	17.17	14.11
T/R	39.2	36.8	34.3	32.0	30.4	29.3	26.5	23.8	21.7	20.1	18.9	18.3	17.4	15.4	13.4	11.4	9.3
kW	3.96	3.87	3.79	3.70	**3.64**	3.61	3.52	3.43	3.34	3.25	3.16	3.11	3.08	2.99	2.90	2.81	2.72
Amps	19.1	17.5	16.2	15.1	14.5	14.1	13.2	12.4	11.7	11.1	10.5	10.1	9.9	9.3	8.6	7.9	7.1
COP	4.39	4.21	4.02	3.83	3.70	3.60	3.33	3.08	2.87	2.73	2.64	2.60	2.51	2.29	2.05	1.79	1.52

GSZ140601K* - ASPT61D14A*

	Outdoor Ambient Temperature																
	65	60	55	50	47	45	40	35	30	25	20	17	15	10	5	0	-5
MBh	75.71	71.04	66.44	61.91	**59.00**	56.89	51.54	46.52	42.41	39.39	37.18	36.00	34.47	30.63	26.80	22.97	19.13
T/R	38.9	36.5	34.2	31.8	30.3	29.3	26.5	23.9	21.8	20.3	19.1	18.5	17.7	15.8	13.8	11.8	9.8
kW	4.91	4.79	4.67	4.55	**4.48**	4.43	4.31	4.20	4.08	3.96	3.84	3.77	3.72	3.60	3.48	3.36	3.25
Amps	23.4	21.5	19.8	18.4	17.6	17.2	16.1	15.1	14.3	13.5	12.8	12.3	12.0	11.2	10.4	9.5	8.5
COP	4.52	4.35	4.17	3.99	3.86	3.76	3.50	3.25	3.05	2.92	2.84	2.80	2.71	2.49	2.25	2.00	1.73

Calculations are based on nominal CFM and 70°F indoor dry bulb.
Note: Shaded area is AHRI Rating Conditions at 47°F outdoor ambient temperature.

Amps = Outdoor unit amps (comp.+fan)
kW = Total system power

GSZ140181K* + ARUF25B14** + TXV Conditions: 80 °F IBD, 67 °F IWB @ 610 CFM				
Outdoor Tem. ° F.	**Total BTU/h**	**Sensible BTU/h**	**Latent BTU/h**	**Total Watts**
75	18,900	13,986	4,914	1,180
80	18,650	14,077	4,573	1,245
85	18,400	14,168	4,232	1,310
90	18,000	14,036	3,964	1,380
95	**17,600**	**13,904**	**3,696**	**1,450**
100	17,100	13,675	3,425	1,530
105	16,600	13,446	3,154	1,610
110	16,150	13,474	2,676	1,705
115	15,700	13,502	2,198	1,800
TVA Conditions @ 95° OD DB, 75° ID DB 63° ID WB				
95°	17,000	13,600	3,400	1,450

GSZ140191A* + ARUF25B14** + TXV Conditions: 80 °F IBD, 67 °F IWB @ 614 CFM				
Outdoor Tem. ° F.	**Total BTU/h**	**Sensible BTU/h**	**Latent BTU/h**	**Total Watts**
75	18,650	13,962	4,688	1,250
80	18,450	14,033	4,392	1,315
85	18,200	14,103	4,097	1,380
90	17,800	13,970	3,830	1,450
95	**17,400**	**13,838**	**3,562**	**1,525**
100	16,900	13,650	3,275	1,605
105	16,450	13,463	2,987	1,685
110	16,000	13,514	2,486	1,780
115	15,550	13,564	1,986	1,870
TVA Conditions @ 95° OD DB, 75° ID DB 63° ID WB				
95°	16,800	13,550	3,250	1,525

GSZ140241K* + ARUF25B14** + TXV Conditions: 80 °F IBD, 67 °F IWB @ 870 CFM				
Outdoor Tem. ° F.	**Total BTU/h**	**Sensible BTU/h**	**Latent BTU/h**	**Total Watts**
75	25,100	19,076	6,024	1,580
80	25,400	19,093	6,307	1,675
85	24,500	19,110	5,390	1,770
90	24,550	18,915	5,635	1,870
95	**23,400**	**18,720**	**4,680**	**1,970**
100	23,350	18,532	4,819	2,080
105	22,100	18,343	3,757	2,190
110	22,050	18,368	3,683	2,385
115	20,900	18,392	2,508	2,450
TVA Conditions @ 95° OD DB, 75° ID DB 63° ID WB				
95°	22,600	18,532	4,068	1,970

GSZ140251A* + ARUF25B14** + TXV Conditions: 80 °F IBD, 67 °F IWB @ 614 CFM				
Outdoor Tem. ° F.	**Total BTU/h**	**Sensible BTU/h**	**Latent BTU/h**	**Total Watts**
75	24,500	17,976	6,524	1,625
80	24,200	18,076	6,124	1,720
85	23,900	18,176	5,724	1,810
90	23,350	18,015	5,360	1,910
95	**22,850**	**17,853**	**4,997**	**2,010**
100	22,200	17,600	4,600	2,120
105	21,550	17,347	4,203	2,235
110	20,950	17,424	3,526	2,365
115	20,350	17,501	2,849	2,495
TVA Conditions @ 95° OD DB, 75° ID DB 63° ID WB				
95°	22,000	17,450	4,550	2,010

GSZ140301K* + ARUF29B14** + TXV Conditions: 80 °F IBD, 67 °F IWB @ 870 CFM				
Outdoor Tem. ° F.	**Total BTU/h**	**Sensible BTU/h**	**Latent BTU/h**	**Total Watts**
75	29,600	20,720	8,880	1,880
80	29,250	20,764	8,486	1,995
85	28,900	20,808	8,092	2,110
90	28,250	20,616	7,634	2,230
95	**27,600**	**20,424**	**7,176**	**2,350**
100	26,850	20,130	6,720	2,490
105	26,100	19,836	6,264	2,630
110	25,400	19,922	5,479	2,790
115	24,700	20,007	4,693	2,950
TVA Conditions @ 95° OD DB, 75° ID DB 63° ID WB				
95°	26,600	19,950	6,650	2,360

GSZ140311A* + ARUF29B14** + TXV Conditions: 80 °F IBD, 67 °F IWB @ 614 CFM				
Outdoor Tem. ° F.	**Total BTU/h**	**Sensible BTU/h**	**Latent BTU/h**	**Total Watts**
75	30,550	22,385	8,165	1,920
80	30,200	22,492	7,708	2,025
85	29,850	22,600	7,250	2,130
90	29,200	22,378	6,822	2,245
95	**28,550**	**22,156**	**6,394**	**2,360**
100	27,750	21,845	5,930	2,485
105	27,000	21,534	5,466	2,615
110	26,250	21,596	4,679	2,765
115	25,550	21,658	3,892	2,915
TVA Conditions @ 95° OD DB, 75° ID DB 63° ID WB				
95°	27,550	21,650	5,900	2,360

GSZ140361K* + ARUF37C14** + TXV				
Conditions: 80 °F IBD, 67 °F IWB @ 1070 CFM				
Outdoor Tem. ° F.	**Total BTU/h**	**Sensible BTU/h**	**Latent BTU/h**	**Total Watts**
75	37,700	26,390	11,310	2,430
80	37,250	26,443	10,807	2,575
85	36,800	26,496	10,304	2,720
90	36,000	26,272	9,728	2,880
95	**35,200**	**26,048**	**9,152**	**3,040**
100	34,200	25,640	8,560	3,220
105	33,200	25,232	7,968	3,400
110	32,300	25,333	6,967	3,610
115	31,400	25,434	5,966	3,820
TVA Conditions @ 95° OD DB, 75° ID DB 63° ID WB				
95°	33,900	25,425	8,475	3,050

GSZ140371A* + ARUF37C14** + TXV				
Conditions: 80 °F IBD, 67 °F IWB @ 614 CFM				
Outdoor Tem. ° F.	**Total BTU/h**	**Sensible BTU/h**	**Latent BTU/h**	**Total Watts**
75	36,400	26,466	9,934	2,265
80	35,950	26,564	9,386	2,390
85	35,500	26,663	8,837	2,515
90	34,750	26,417	8,333	2,650
95	**34,000**	**26,170**	**7,830**	**2,785**
100	33,050	25,798	7,277	2,940
105	32,150	25,427	6,723	3,090
110	31,300	25,505	5,795	3,270
115	30,450	25,582	4,868	3,450
TVA Conditions @ 95° OD DB, 75° ID DB 63° ID WB				
95°	32,800	25,550	7,250	2,790

GSZ140421K* + ARUF43C14** + TXV				
Conditions: 80 °F IBD, 67 °F IWB @ 1300 CFM				
Outdoor Tem. ° F.	**Total BTU/h**	**Sensible BTU/h**	**Latent BTU/h**	**Total Watts**
75	41,800	29,678	12,122	2,720
80	41,300	29,935	11,365	2,870
85	40,800	30,192	10,608	3,020
90	39,900	29,916	9,984	3,190
95	**39,000**	**29,640**	**9,360**	**3,360**
100	37,900	29,172	8,728	3,545
105	36,800	28,704	8,096	3,730
110	35,800	28,794	7,006	3,950
115	34,800	28,884	5,916	4,170
TVA Conditions @ 95° OD DB, 75° ID DB 63° ID WB				
95°	37,600	28,952	8,648	3,360

GSZ140481K + ARUF61D14** + TXV				
Conditions: 80 °F IBD, 67 °F IWB @ 1560 CFM				
Outdoor Tem. ° F.	**Total BTU/h**	**Sensible BTU/h**	**Latent BTU/h**	**Total Watts**
75	48,300	35,742	12,558	3,110
80	47,700	36,005	11,696	3,290
85	47,100	36,267	10,833	3,470
90	46,550	35,909	10,642	3,665
95	**45,000**	**35,550**	**9,450**	**3,860**
100	43,750	34,988	8,763	4,075
105	42,500	34,425	8,075	4,290
110	41,350	34,499	6,852	4,545
115	40,200	34,572	5,628	4,800
TVA Conditions @ 95° OD DB, 75° ID DB 63° ID WB				
95°	43,400	34,720	8,680	3,860

GSZ140491K* + ARUF49C14** + TXV				
Conditions: 80 °F IBD, 67 °F IWB @ 1400 CFM				
Outdoor Tem. ° F.	**Total BTU/h**	**Sensible BTU/h**	**Latent BTU/h**	**Total Watts**
75	47,700	33,867	13,833	3,000
80	47,100	33,906	13,194	3,175
85	46,500	33,945	12,555	3,350
90	45,500	33,660	11,840	3,540
95	**44,500**	**33,375**	**11,125**	**3,730**
100	43,250	33,068	10,183	3,940
105	42,000	32,760	9,240	4,150
110	40,850	32,856	7,995	4,400
115	39,700	32,951	6,749	4,650
TVA Conditions @ 95° OD DB, 75° ID DB 63° ID WB				
95°	42,900	32,604	10,296	3,730

GSZ140601K* + ASPT61D14** + TXV				
Conditions: 80 °F IBD, 67 °F IWB @ 1790 CFM				
Outdoor Tem. ° F.	**Total BTU/h**	**Sensible BTU/h**	**Latent BTU/h**	**Total Watts**
75	60,600	42,420	18,180	3,770
80	59,850	42,782	17,069	4,010
85	59,100	43,143	15,957	4,250
90	57,800	42,759	15,041	4,505
95	**56,500**	**42,375**	**14,125**	**4,760**
100	54,900	41,708	13,192	5,045
105	53,300	41,041	12,259	5,330
110	51,900	41,226	10,675	5,670
115	50,500	41,410	9,090	6,010
TVA Conditions @ 95° OD DB, 75° ID DB 63° ID WB				
95°	54,500	41,420	13,080	4,770

Outdoor Unit	Indoor Units		Cooling Ratings ^				TVA Ratings [3]		Heating Ratings ^			CFM	AHRI #
	Coils/Air Handlers	Furnaces	Total	Sens.	SEER [1]	EER [2]	Total	Sens.	Hi [4]	HSPF [5]	Low [6]		
GSZ14 0181K*	ARUF25B14A*		17,600	13,900	14.0	11.5	17,000	13,600	18,000	8.2	10,000	610	7995033
	ARUF25B14A*+TXV		17,400	13,700	14.0	11.5	16,800	13,400	18,000	8.2	10,000	610	7995034
	ASPT25B14A*		18,000	14,200	15.0	12.0	17,400	13,900	17,200	8.2	10,000	580	8242613
	ASPT29B14A*		18,000	14,200	15.0	12.5	17,400	13,900	17,200	8.5	10,000	565	8242614
	AVPTC24B14A*		17,200	13,600	14.5	12.0	16,600	13,300	17,200	8.2	10,000	600	7994958
	AVPTC25B14A*		17,200	13,600	15.0	12.0	16,600	13,300	17,200	8.3	9,600	640	8996178
	AVPTC29B14A*		17,200	13,600	15.0	12.5	16,600	13,300	17,200	8.5	9,600	585	8996179
	AWUF31XX16A*		17,200	13,600	14.5	12.0	16,600	13,300	17,200	8.2	10,000	620	7994959
	AWUF31XX16A*+TXV		17,200	13,600	15.0	12.5	16,600	13,300	17,200	8.2	10,000	620	7994960
	AWUF32XX16A*		17,200	13,600	14.5	12.0	16,600	13,300	17,200	8.2	10,000	620	8005877
	AWUF32XX16A*+TXV		17,200	13,600	15.0	12.5	16,600	13,300	17,200	8.2	10,000	620	8005878
	CA*F3137*6A*+EEP+TXV		17,600	13,900	14.0	11.5	17,000	13,600	18,000	8.2	10,000	610	7995035
	CA*F3636*6D*+TXV	G*EC960403BNA*	17,200	13,500	14.5	12.2	16,600	13,600	17,600	8.2	10,000	625	10338358
	CA*F3636*6D*+MBVC1200**-1A*+TXV		17,600	13,900	15.0	12.5	17,000	13,600	17,600	8.2	10,000	600	7994961
	CA*F3636*6D*+TXV	G*VC80603B*B*	17,800	14,400	15.0	12.5	17,200	14,000	17,800	8.2	10,000	550	9924203
	CA*F3636*6D*+TXV	G*VC80803B*B*	17,800	14,400	15.0	12.5	17,200	14,000	17,800	8.2	10,000	600	9924206
	CA*F3636*6D*+TXV	A*EC960302BNA*	17,200	13,600	15.0	12.5	16,600	13,300	17,400	8.2	10,000	540	7994962
	CA*F3636*6D*+TXV	A*EC960402BNA*	17,200	13,600	15.0	12.5	16,600	13,300	17,400	8.2	10,000	540	7994963
	CA*F3636*6D*+TXV	A*EC960603BNA*	17,200	13,600	15.0	12.5	16,600	13,300	17,400	8.2	10,000	550	7994964
	CA*F3636*6D*+TXV	A*EC960803BNA*	17,200	13,600	15.0	12.5	16,600	13,300	17,400	8.2	10,000	540	7994965
	CA*F3636*6D*+TXV	A*EH800603B*A*	17,800	14,100	15.0	12.5	17,200	13,800	17,800	8.2	10,000	650	7994966
	CA*F3636*6D*+TXV	A*VC80604B*B*	17,600	13,900	14.5	12.0	17,000	13,600	17,600	8.2	10,000	620	7994967
	CA*F3636*6D*+TXV	A*VC960403BNA*	17,600	13,900	14.5	12.0	17,000	13,600	17,600	8.2	10,000	610	7994968
	CA*F3636*6D*+TXV	A*VC960603BNA*	17,600	13,900	14.5	12.0	17,000	13,600	17,600	8.2	10,000	610	7994969
	CA*F3636*6D*+TXV	A*VC960803BNA*	17,600	13,900	14.5	12.0	17,000	13,600	17,600	8.2	10,000	615	7994970
	CA*F3636*6D*+TXV	G*E80603B*B*	17,800	14,100	15.0	12.5	17,200	13,800	17,800	8.2	10,000	650	7994971
	CA*F3636*6D*+TXV	G*EC960302BNA*	17,200	13,600	15.0	12.5	16,600	13,300	17,400	8.2	10,000	540	7994972
	CA*F3636*6D*+TXV	G*EC960402BNA*	17,200	13,600	15.0	12.5	16,600	13,300	17,400	8.2	10,000	540	7994973
	CA*F3636*6D*+TXV	G*EC960603BNA*	17,200	13,600	15.0	12.5	16,600	13,300	17,400	8.2	10,000	550	7994974
	CA*F3636*6D*+TXV	G*EC960803BNA*	17,200	13,600	15.0	12.5	16,600	13,300	17,400	8.2	10,000	540	7994975
	CA*F3636*6D*+TXV	G*VC80604B*B*	17,600	13,900	14.5	12.0	17,000	13,600	17,600	8.2	10,000	620	7994976
	CA*F3636*6D*+TXV	G*VC960403BNA*	17,600	13,900	14.5	12.0	17,000	13,600	17,600	8.2	10,000	610	7994977
	CA*F3636*6D*+TXV	G*VC960603BNA*	17,600	13,900	14.5	12.0	17,000	13,600	17,600	8.2	10,000	610	7994978
	CA*F3636*6D*+TXV	G*VC960803BNA*	17,600	13,900	14.5	12.0	17,000	13,600	17,600	8.2	10,000	615	7994979
	CHPF3636B6C*+MBVC1200**-1A*+TXV		17,600	13,900	15.0	12.5	17,000	13,600	17,600	8.2	10,000	600	7995036
	CHPF3636B6C*+TXV	G*EC960403BNA*	17,600	13,800	15.0	12.5	17,000	13,900	17,600	8.2	10,000	600	10338359
	CHPF3636B6C*+TXV	G*VC80603B*B*	17,800	14,400	15.0	12.5	17,200	14,000	17,800	8.2	10,000	550	9924204
	CHPF3636B6C*+TXV	G*VC80803B*B*	17,800	14,400	15.0	12.5	17,200	14,000	17,800	8.2	10,000	600	9924207
	CHPF3636B6C*+TXV	A*EC960302BNA*	17,200	13,600	15.0	12.5	16,600	13,300	17,400	8.2	10,000	540	7995037
	CHPF3636B6C*+TXV	A*EC960402BNA*	17,200	13,600	15.0	12.5	16,600	13,300	17,400	8.2	10,000	540	7995038
	CHPF3636B6C*+TXV	A*EC960603BNA*	17,200	13,600	15.0	12.5	16,600	13,300	17,400	8.2	10,000	550	7995039
	CHPF3636B6C*+TXV	A*EC960803BNA*	17,200	13,600	15.0	12.5	16,600	13,300	17,400	8.2	10,000	540	7995040
	CHPF3636B6C*+TXV	A*EH800603B*A*	17,800	14,100	15.0	12.5	17,200	13,800	17,800	8.2	10,000	650	7995041
	CHPF3636B6C*+TXV	A*VC80604B*B*	17,600	13,900	14.5	12.0	17,000	13,600	17,600	8.2	10,000	620	7995042
	CHPF3636B6C*+TXV	A*VC960403BNA*	17,600	13,900	14.5	12.0	17,000	13,600	17,600	8.2	10,000	610	7995043
	CHPF3636B6C*+TXV	A*VC960603BNA*	17,600	13,900	14.5	12.0	17,000	13,600	17,600	8.2	10,000	610	7995044
	CHPF3636B6C*+TXV	A*VC960803BNA*	17,600	13,900	14.5	12.0	17,000	13,600	17,600	8.2	10,000	615	7995045
	CHPF3636B6C*+TXV	G*E80603B*B*	17,800	14,100	15.0	12.5	17,200	13,800	17,800	8.2	10,000	650	7995046
	CHPF3636B6C*+TXV	G*EC960302BNA*	17,200	13,600	15.0	12.5	16,600	13,300	17,400	8.2	10,000	540	7995047
	CHPF3636B6C*+TXV	G*EC960402BNA*	17,200	13,600	15.0	12.5	16,600	13,300	17,400	8.2	10,000	540	7995048
	CHPF3636B6C*+TXV	G*EC960603BNA*	17,200	13,600	15.0	12.5	16,600	13,300	17,400	8.2	10,000	550	7995049
	CHPF3636B6C*+TXV	G*EC960803BNA*	17,200	13,600	15.0	12.5	16,600	13,300	17,400	8.2	10,000	540	7995050
	CHPF3636B6C*+TXV	G*VC80604B*B*	17,600	13,900	14.5	12.0	17,000	13,600	17,600	8.2	10,000	620	7995051
	CHPF3636B6C*+TXV	G*VC960403BNA*	17,600	13,900	14.5	12.0	17,000	13,600	17,600	8.2	10,000	610	7995052
	CHPF3636B6C*+TXV	G*VC960603BNA*	17,600	13,900	14.5	12.0	17,000	13,600	17,600	8.2	10,000	610	7995053
	CHPF3636B6C*+TXV	G*VC960803BNA*	17,600	13,900	14.5	12.0	17,000	13,600	17,600	8.2	10,000	615	7995054
	CSCF3036N6D*+EEP+TXV		17,600	13,900	14.0	11.5	17,000	13,600	17,600	8.2	10,000	610	7994980
	CSCF3036N6D*+MBVC1200**-1A*+TXV		17,600	13,900	15.0	12.5	17,000	13,600	17,600	8.2	10,000	600	7994981

See Notes on Page 50.

Outdoor Unit	Indoor Units		Cooling Ratings ^				TVA Ratings [3]		Heating Ratings ^			CFM	AHRI #
	Coils/Air Handlers	Furnaces	Total	Sens.	SEER [1]	EER [2]	Total	Sens.	Hi [4]	HSPF [5]	Low [6]		
GSZ14 0181K* (Contd.)	CSCF3036N6D*+TXV	G*EC960403BNA*	17,600	13,800	15.0	12.5	17,000	13,900	17,600	8.2	10,000	625	10338360
	CSCF3036N6D*+TXV	G*VC80603B*B*	17,800	14,400	15.0	12.5	17,200	14,000	17,800	8.2	10,000	550	9924205
	CSCF3036N6D*+TXV	G*VC80803B*B*	17,800	14,400	15.0	12.5	17,200	14,000	17,800	8.2	10,000	600	9924208
	CSCF3036N6D*+TXV	A*EC960302BNA*	17,200	13,600	15.0	12.5	16,600	13,300	17,400	8.2	10,000	540	7994982
	CSCF3036N6D*+TXV	A*EC960402BNA*	17,200	13,600	15.0	12.5	16,600	13,300	17,400	8.2	10,000	540	7994983
	CSCF3036N6D*+TXV	A*EC960603BNA*	17,200	13,600	15.0	12.5	16,600	13,300	17,400	8.2	10,000	550	7994984
	CSCF3036N6D*+TXV	A*EC960803BNA*	17,200	13,600	15.0	12.5	16,600	13,300	17,400	8.2	10,000	540	7994985
	CSCF3036N6D*+TXV	A*EH800603B*A*	17,800	14,100	15.0	12.5	17,200	13,800	17,800	8.2	10,000	650	7994986
	CSCF3036N6D*+TXV	A*VC80604B*B*	17,600	13,900	14.5	12.0	17,000	13,600	17,600	8.2	10,000	620	7994987
	CSCF3036N6D*+TXV	A*VC960403BNA*	17,600	13,900	14.5	12.0	17,000	13,600	17,600	8.2	10,000	610	7994988
	CSCF3036N6D*+TXV	A*VC960603BNA*	17,600	13,900	14.5	12.0	17,000	13,600	17,600	8.2	10,000	610	7994989
	CSCF3036N6D*+TXV	A*VC960803BNA*	17,600	13,900	14.5	12.0	17,000	13,600	17,600	8.2	10,000	615	7994990
	CSCF3036N6D*+TXV	G*E80603B*B*	17,800	14,100	15.0	12.5	17,200	13,800	17,800	8.2	10,000	650	7994991
	CSCF3036N6D*+TXV	G*EC960302BNA*	17,200	13,600	15.0	12.5	16,600	13,300	17,400	8.2	10,000	540	7994992
	CSCF3036N6D*+TXV	G*EC960402BNA*	17,200	13,600	15.0	12.5	16,600	13,300	17,400	8.2	10,000	540	7994993
	CSCF3036N6D*+TXV	G*EC960603BNA*	17,200	13,600	15.0	12.5	16,600	13,300	17,400	8.2	10,000	550	7994994
	CSCF3036N6D*+TXV	G*EC960803BNA*	17,200	13,600	15.0	12.5	16,600	13,300	17,400	8.2	10,000	540	7994995
	CSCF3036N6D*+TXV	G*VC80604B*B*	17,600	13,900	14.5	12.0	17,000	13,600	17,600	8.2	10,000	620	7994996
	CSCF3036N6D*+TXV	G*VC960403BNA*	17,600	13,900	14.5	12.0	17,000	13,600	17,600	8.2	10,000	610	7994997
	CSCF3036N6D*+TXV	G*VC960603BNA*	17,600	13,900	14.5	12.0	17,000	13,600	17,600	8.2	10,000	610	7994998
	CSCF3036N6D*+TXV	G*VC960803BNA*	17,600	13,900	14.5	12.0	17,000	13,600	17,600	8.2	10,000	615	7994999
GSZ14 0191A*	ACNF31XX16A*		17,200	13,700	14.0	12.0	16,600	12,900	17,000	8.2	10,000	635	9084478
	ACNF31XX16A*+TXV		17,200	13,700	14.0	12.0	16,600	12,900	17,000	8.2	10,000	635	9084477
	ARUF25B14A*		17,400	13,800	14.0	11.5	16,800	13,100	18,000	8.2	10,000	610	9084468
	ARUF25B14A*+TXV		17,400	13,800	14.0	11.5	16,800	13,100	18,000	8.2	10,000	610	9084467
	ARUF31B14A*		17,800	14,200	14.0	11.5	17,200	13,400	17,000	8.2	10,000	625	9084470
	ARUF31B14A*+TXV		17,800	14,200	14.0	11.5	17,200	13,400	17,000	8.2	10,000	625	9084469
	ASPT29B14A*		18,000	14,300	15.0	12.5	17,400	13,500	17,000	8.5	10,000	590	9084471
	ASPT30C14A*		18,000	14,300	15.0	12.5	17,400	13,500	17,000	8.5	10,000	580	9084472
	AWUF19XX16A*		17,200	13,700	14.0	12.0	16,600	12,900	17,000	8.2	10,000	580	9084474
	AWUF19XX16A*+TXV		17,200	13,700	14.0	12.0	16,600	12,900	17,000	8.2	10,000	580	9084473
	AWUF31XX16A*		17,200	13,700	14.5	12.0	16,600	12,900	17,000	8.2	10,000	550	9084476
	AWUF31XX16A*+TXV		17,200	13,700	15.0	12.5	16,600	12,900	17,000	8.2	10,000	550	9084475
GSZ14 0241K*	ARUF25B14A*		23,200	18,600	14.0	11.5	22,400	18,400	23,200	8.2	13,000	870	7995055
	ARUF25B14A*+TXV		23,200	18,600	14.0	11.5	22,400	18,400	23,200	8.2	12,600	870	7995056
	ASPT25B14A*		23,200	18,600	14.5	12.0	22,400	18,400	23,200	8.2	13,400	800	8242617
	ASPT29B14A*		23,400	18,700	15.0	12.5	22,600	18,500	23,200	8.5	13,400	790	8242618
	ASPT30C14A*		23,400	18,700	15.0	12.5	22,600	18,500	23,200	8.5	13,000	800	8669637
	ASPT33C14A*		23,400	18,700	15.0	12.5	22,600	18,600	23,200	8.5	13,000	820	10207396
	AVPTC24B14A*		23,200	18,600	14.5	12.0	22,400	18,400	23,200	8.2	13,400	860	7995057
	AVPTC25B14A*		23,200	18,600	14.5	12.0	22,400	18,400	23,200	8.3	13,200	850	8996180
	AVPTC29B14A*		23,200	18,600	15.0	12.5	22,400	18,400	23,200	8.5	13,200	795	8996181
	AVPTC30C14A*		23,400	18,700	15.0	12.5	22,600	18,500	23,200	8.5	13,000	800	8875166
	AVPTC33C14A*		23,400	18,700	15.0	12.5	22,600	18,600	23,200	8.5	13,000	785	10207408
	AWUF31XX16A*		22,800	18,200	14.5	12.0	22,000	18,100	23,200	8.2	13,000	845	7995000
	AWUF31XX16A*+TXV		22,800	18,200	15.0	12.5	22,000	18,100	23,200	8.2	13,000	845	7995001
	AWUF32XX16A*		22,800	18,200	14.5	12.0	22,000	18,100	23,200	8.2	13,000	845	8005879
	AWUF32XX16A*+TXV		22,800	18,200	15.0	12.5	22,000	18,100	23,200	8.2	13,000	845	8005880
	CA*F3137*6A*+EEP+TXV		23,600	18,900	14.0	11.5	22,800	18,700	23,200	8.2	13,000	870	7995002
	CA*F3636*6D*	G*VC80603B*B*	23,200	19,200	14.5	12.0	22,400	18,700	22,800	8.2	13,000	750	9924209
	CA*F3636*6D*	G*VC80803B*B*	23,200	19,200	14.5	12.0	22,400	18,700	22,800	8.2	13,000	750	9924213
	CA*F3636*6D*	G*VC80804C*B*	23,000	19,000	14.5	12.0	22,200	18,600	22,800	8.2	13,000	800	9924217
	CA*F3636*6D*	A*EC960302BNA*	23,000	18,400	14.5	12.0	22,200	18,200	22,800	8.2	13,000	800	7995078
	CA*F3636*6D*	A*EC960402BNA*	23,000	18,400	14.5	12.0	22,200	18,200	22,800	8.2	13,000	820	7995079
	CA*F3636*6D*	A*EC960603BNA*	23,000	18,400	14.5	12.0	22,200	18,200	22,800	8.2	13,000	840	7995080
	CA*F3636*6D*	A*EC960803BNA*	23,000	18,400	14.5	12.0	22,200	18,200	22,800	8.2	13,000	770	7995081

See Notes on Page 50.

Outdoor Unit	Indoor Units		Cooling Ratings ^				TVA Ratings [3]		Heating Ratings ^			CFM	AHRI #
	Coils/Air Handlers	Furnaces	Total	Sens.	SEER [1]	EER [2]	Total	Sens.	Hi [4]	HSPF [5]	Low [6]		
GSZ14 0241K* (Contd.)	CA*F3636*6D*	A*EH800603B*A*	23,200	18,600	14.5	12.0	22,400	18,400	23,000	8.2	13,000	860	7995082
	CA*F3636*6D*	A*VC80604B*B*	23,000	18,400	14.5	12.0	22,200	18,200	22,800	8.2	13,000	850	7995083
	CA*F3636*6D*	A*VC960403BNA*	23,000	18,400	14.5	12.0	22,200	18,200	23,200	8.2	13,000	800	7995084
	CA*F3636*6D*	A*VC960603BNA*	23,000	18,400	14.5	12.0	22,200	18,200	23,200	8.2	13,000	810	7995085
	CA*F3636*6D*	A*VC960803BNA*	23,000	18,400	14.5	12.0	22,200	18,200	23,200	8.2	13,000	810	7995086
	CA*F3636*6D*	G*E80603B*B*	23,200	18,600	14.5	12.0	22,400	18,400	23,000	8.2	13,000	860	7995087
	CA*F3636*6D*	G*EC960302BNA*	23,000	18,400	14.5	12.0	22,200	18,200	22,800	8.2	13,000	800	7995088
	CA*F3636*6D*	G*EC960402BNA*	23,000	18,400	14.5	12.0	22,200	18,200	22,800	8.2	13,000	820	7995089
	CA*F3636*6D*	G*EC960603BNA*	23,000	18,400	14.5	12.0	22,200	18,200	22,800	8.2	13,000	840	7995090
	CA*F3636*6D*	G*EC960803BNA*	23,000	18,400	14.5	12.0	22,200	18,200	22,800	8.2	13,000	770	7995091
	CA*F3636*6D*	G*VC80604B*B*	23,000	18,400	14.5	12.0	22,200	18,200	22,800	8.2	13,000	850	7995092
	CA*F3636*6D*	G*VC960403BNA*	23,000	18,400	14.5	12.0	22,200	18,200	23,200	8.2	13,000	800	7995093
	CA*F3636*6D*	G*VC960603BNA*	23,000	18,400	14.5	12.0	22,200	18,200	23,200	8.2	13,000	810	7995094
	CA*F3636*6D*	G*VC960803BNA*	23,000	18,400	14.5	12.0	22,200	18,200	23,200	8.2	13,000	810	7995095
	CA*F3636*6D*+MBVC1200**-1A*		23,600	18,900	14.5	12.0	22,800	18,700	23,200	8.5	13,000	855	7995058
	CA*F3636*6D*+MBVC1200**-1A*+TXV		23,600	18,900	15.0	12.5	22,800	18,700	23,200	8.5	13,000	855	7995059
	CA*F3636*6D*	G*EC960403BNA*	22,200	17,800	14.0	12.0	21,400	17,900	22,200	8.2	13,000	800	10338361
	CA*F3636*6D*+TXV	G*EC960403BNA*	22,200	17,800	14.5	12.0	21,400	17,900	22,200	8.2	13,000	800	10338362
	CA*F3636*6D*+TXV	G*VC80603B*B*	23,200	19,200	14.5	12.0	22,400	18,700	22,800	8.2	13,000	750	9924210
	CA*F3636*6D*+TXV	G*VC80803B*B*	23,200	19,200	14.5	12.0	22,400	18,700	22,800	8.2	13,000	750	9924214
	CA*F3636*6D*+TXV	G*VC80804C*B*	23,000	19,000	15.0	12.5	22,200	18,600	22,800	8.2	13,000	800	9924218
	CA*F3636*6D*+TXV	A*EC960302BNA*	23,000	18,400	15.0	12.5	22,200	18,200	22,800	8.2	13,000	800	7995060
	CA*F3636*6D*+TXV	A*EC960402BNA*	23,000	18,400	15.0	12.5	22,200	18,200	22,800	8.2	13,000	820	7995061
	CA*F3636*6D*+TXV	A*EC960603BNA*	23,000	18,400	15.0	12.5	22,200	18,200	22,800	8.2	13,000	840	7995062
	CA*F3636*6D*+TXV	A*EC960803BNA*	23,000	18,400	15.0	12.5	22,200	18,200	22,800	8.2	13,000	770	7995063
	CA*F3636*6D*+TXV	A*EH800603B*A*	23,200	18,600	14.5	12.0	22,400	18,400	23,000	8.2	13,000	860	7995064
	CA*F3636*6D*+TXV	A*VC80604B*B*	23,000	18,400	15.0	12.5	22,200	18,200	22,800	8.2	13,000	850	7995065
	CA*F3636*6D*+TXV	A*VC960403BNA*	23,000	18,400	14.5	12.0	22,200	18,200	23,200	8.2	13,000	800	7995066
	CA*F3636*6D*+TXV	A*VC960603BNA*	23,000	18,400	14.5	12.0	22,200	18,200	23,200	8.2	13,000	810	7995067
	CA*F3636*6D*+TXV	A*VC960803BNA*	23,000	18,400	14.5	12.0	22,200	18,200	23,200	8.2	13,000	810	7995068
	CA*F3636*6D*+TXV	G*E80603B*B*	23,200	18,600	14.5	12.0	22,400	18,400	23,000	8.2	13,000	860	7995069
	CA*F3636*6D*+TXV	G*EC960302BNA*	23,000	18,400	15.0	12.5	22,200	18,200	22,800	8.2	13,000	800	7995070
	CA*F3636*6D*+TXV	G*EC960402BNA*	23,000	18,400	15.0	12.5	22,200	18,200	22,800	8.2	13,000	820	7995071
	CA*F3636*6D*+TXV	G*EC960603BNA*	23,000	18,400	15.0	12.5	22,200	18,200	22,800	8.2	13,000	840	7995072
	CA*F3636*6D*+TXV	G*EC960803BNA*	23,000	18,400	15.0	12.5	22,200	18,200	22,800	8.2	13,000	770	7995073
	CA*F3636*6D*+TXV	G*VC80604B*B*	23,000	18,400	15.0	12.5	22,200	18,200	22,800	8.2	13,000	850	7995074
	CA*F3636*6D*+TXV	G*VC960403BNA*	23,000	18,400	14.5	12.0	22,200	18,200	23,200	8.2	13,000	800	7995075
	CA*F3636*6D*+TXV	G*VC960603BNA*	23,000	18,400	14.5	12.0	22,200	18,200	23,200	8.2	13,000	810	7995076
	CA*F3636*6D*+TXV	G*VC960803BNA*	23,000	18,400	14.5	12.0	22,200	18,200	23,200	8.2	13,000	810	7995077
	CHPF3636B6C*	G*EC960403BNA*	22,800	18,300	14.0	12.0	22,000	18,400	22,400	8.2	13,000	725	10338363
	CHPF3636B6C*	G*VC80603B*B*	23,200	19,200	14.5	12.0	22,400	18,700	22,800	8.2	13,000	750	9924211
	CHPF3636B6C*	G*VC80803B*B*	23,200	19,200	14.5	12.0	22,400	18,700	22,800	8.2	13,000	750	9924215
	CHPF3636B6C*	A*EC960302BNA*	23,000	18,400	14.5	12.0	22,200	18,200	22,800	8.2	13,000	800	7995014
	CHPF3636B6C*	A*EC960402BNA*	23,000	18,400	14.5	12.0	22,200	18,200	22,800	8.2	13,000	820	7995015
	CHPF3636B6C*	A*EC960603BNA*	23,000	18,400	14.5	12.0	22,200	18,200	22,800	8.2	13,000	840	7995016
	CHPF3636B6C*	A*EC960803BNA*	23,000	18,400	14.5	12.0	22,200	18,200	22,800	8.2	13,000	770	7995017
	CHPF3636B6C*	A*EH800603B*A*	23,200	18,600	14.5	12.0	22,400	18,400	23,200	8.2	13,000	860	7995018
	CHPF3636B6C*	A*VC80604B*B*	23,000	18,400	14.5	12.0	22,200	18,200	22,800	8.2	13,000	850	7995019
	CHPF3636B6C*	G*E80603B*B*	23,200	18,600	14.5	12.0	22,400	18,400	23,200	8.2	13,000	860	7995020
	CHPF3636B6C*	G*EC960302BNA*	23,000	18,400	14.5	12.0	22,200	18,200	22,800	8.2	13,000	800	7995021
	CHPF3636B6C*	G*EC960402BNA*	23,000	18,400	14.5	12.0	22,200	18,200	22,800	8.2	13,000	820	7995022
	CHPF3636B6C*	G*EC960603BNA*	23,000	18,400	14.5	12.0	22,200	18,200	22,800	8.2	13,000	840	7995023
	CHPF3636B6C*	G*EC960803BNA*	23,000	18,400	14.5	12.0	22,200	18,200	22,800	8.2	13,000	770	7995024
	CHPF3636B6C*	G*VC80604B*B*	23,000	18,400	14.5	12.0	22,200	18,200	22,800	8.2	13,000	850	7995025
	CHPF3636B6C*	A*VC960403BNA*	23,000	18,400	14.5	12.0	22,200	18,200	23,200	8.2	13,000	800	7995106
	CHPF3636B6C*	A*VC960603BNA*	23,000	18,400	14.5	12.0	22,200	18,200	23,200	8.2	13,000	810	7995107
	CHPF3636B6C*	A*VC960803BNA*	23,000	18,400	14.5	12.0	22,200	18,200	23,200	8.2	13,000	810	7995108
	CHPF3636B6C*	G*VC960403BNA*	23,000	18,400	14.5	12.0	22,200	18,200	23,200	8.2	13,000	800	7995109

See Notes on Page 50.

Outdoor Unit	Indoor Units		Cooling Ratings ^				TVA Ratings [3]		Heating Ratings ^			CFM	AHRI #
	Coils/Air Handlers	Furnaces	Total	Sens.	SEER [1]	EER [2]	Total	Sens.	Hi [4]	HSPF [5]	Low [6]		
GSZ14 0241K* (Contd.)	CHPF3636B6C*	G*VC960603BNA*	23,000	18,400	14.5	12.0	22,200	18,200	23,200	8.2	13,000	810	7995110
	CHPF3636B6C*	G*VC960803BNA*	23,000	18,400	14.5	12.0	22,200	18,200	23,200	8.2	13,000	810	7995111
	CHPF3636B6C*+EEP+TXV		23,200	18,600	14.0	11.5	22,400	18,400	23,200	8.2	13,000	870	7995003
	CHPF3636B6C*+MBVC1200**-1A*		23,600	18,900	14.5	12.0	22,800	18,700	23,200	8.5	13,000	855	7995096
	CHPF3636B6C*+MBVC1200**-1A*+TXV		23,600	18,900	15.0	12.5	22,800	18,700	23,200	8.5	13,000	855	7995097
	CHPF3636B6C*+TXV	G*EC960403BNA*	22,800	18,300	14.5	12.0	22,000	18,400	22,400	8.2	13,000	725	10338364
	CHPF3636B6C*+TXV	G*VC80603B*B*	23,200	19,200	14.5	12.0	22,400	18,700	22,800	8.2	13,000	750	9924212
	CHPF3636B6C*+TXV	G*VC80803B*B*	23,200	19,200	14.5	12.0	22,400	18,700	22,800	8.2	13,000	750	9924216
	CHPF3636B6C*+TXV	A*EC960302BNA*	23,000	18,400	15.0	12.5	22,200	18,200	22,800	8.2	13,000	800	7995004
	CHPF3636B6C*+TXV	A*EC960402BNA*	23,000	18,400	15.0	12.5	22,200	18,200	22,800	8.2	13,000	820	7995005
	CHPF3636B6C*+TXV	A*EC960603BNA*	23,000	18,400	15.0	12.5	22,200	18,200	22,800	8.2	13,000	840	7995006
	CHPF3636B6C*+TXV	A*EC960803BNA*	23,000	18,400	15.0	12.5	22,200	18,200	22,800	8.2	13,000	770	7995007
	CHPF3636B6C*+TXV	A*EH800603B*A*	23,200	18,600	14.5	12.0	22,400	18,400	23,200	8.2	13,000	860	7995008
	CHPF3636B6C*+TXV	G*E80603B*B*	23,200	18,600	14.5	12.0	22,400	18,400	23,200	8.2	13,000	860	7995009
	CHPF3636B6C*+TXV	G*EC960302BNA*	23,000	18,400	15.0	12.5	22,200	18,200	22,800	8.2	13,000	800	7995010
	CHPF3636B6C*+TXV	G*EC960402BNA*	23,000	18,400	15.0	12.5	22,200	18,200	22,800	8.2	13,000	820	7995011
	CHPF3636B6C*+TXV	G*EC960603BNA*	23,000	18,400	15.0	12.5	22,200	18,200	22,800	8.2	13,000	840	7995012
	CHPF3636B6C*+TXV	G*EC960803BNA*	23,000	18,400	15.0	12.5	22,200	18,200	22,800	8.2	13,000	770	7995013
	CHPF3636B6C*+TXV	A*VC80604B*B*	23,000	18,400	15.0	12.5	22,200	18,200	22,800	8.2	13,000	850	7995098
	CHPF3636B6C*+TXV	A*VC960403BNA*	23,000	18,400	14.5	12.0	22,200	18,200	23,200	8.2	13,000	800	7995099
	CHPF3636B6C*+TXV	A*VC960603BNA*	23,000	18,400	14.5	12.0	22,200	18,200	23,200	8.2	13,000	810	7995100
	CHPF3636B6C*+TXV	A*VC960803BNA*	23,000	18,400	14.5	12.0	22,200	18,200	23,200	8.2	13,000	810	7995101
	CHPF3636B6C*+TXV	G*VC80604B*B*	23,000	18,400	15.0	12.5	22,200	18,200	22,800	8.2	13,000	850	7995102
	CHPF3636B6C*+TXV	G*VC960403BNA*	23,000	18,400	14.5	12.0	22,200	18,200	23,200	8.2	13,000	800	7995103
	CHPF3636B6C*+TXV	G*VC960603BNA*	23,000	18,400	14.5	12.0	22,200	18,200	23,200	8.2	13,000	810	7995104
	CHPF3636B6C*+TXV	G*VC960803BNA*	23,000	18,400	14.5	12.0	22,200	18,200	23,200	8.2	13,000	810	7995105
GSZ14 0251A*	ACNF31XX16A*		22,600	18,400	14.0	11.5	21,800	17,900	23,400	8.2	14,000	760	9084487
	ACNF31XX16A*+TXV		22,600	18,400	14.0	11.5	21,800	17,900	23,400	8.2	14,000	760	9084486
	ARUF25B14A*+TXV		23,200	18,800	14.0	11.5	22,400	18,300	23,200	8.2	14,000	860	9084479
	ARUF29B14A*+TXV		23,200	18,800	14.0	11.5	22,400	18,300	23,200	8.2	14,000	860	9084480
	ASPT30C14A*		23,600	19,200	15.0	12.5	22,800	18,600	22,000	8.5	13,000	860	9084481
	ASPT33C14A*		23,600	19,200	15.0	12.5	22,800	18,600	22,000	8.5	13,000	820	10207397
	AVPTC33C14A*		23,600	19,200	15.0	12.5	22,800	18,600	22,000	8.5	13,000	820	10207409
	AWUF25XX16A*		22,200	18,000	14.0	11.5	21,400	17,500	23,200	8.2	13,000	730	9084489
	AWUF25XX16A*+TXV		22,200	18,000	14.0	11.5	21,400	17,500	23,200	8.2	13,000	730	9084488
	AWUF31XX16A*		22,800	18,500	14.5	12.0	22,000	18,000	23,200	8.5	13,400	835	9084483
	AWUF31XX16A*+TXV		22,800	18,500	15.0	12.5	22,000	18,000	23,200	8.5	13,400	835	9084482
	AWUF32XX16A*		22,800	18,500	14.5	12.0	22,000	18,000	23,200	8.5	13,400	835	9084485
	AWUF32XX16A*+TXV		22,800	18,500	15.0	12.5	22,000	18,000	23,200	8.5	13,400	835	9084484
GSZ14 0301K*	ARUF29B14A*+TXV		27,600	20,400	14.0	11.5	26,600	20,000	28,400	8.2	16,200	870	7995112
	ARUF31B14A*		28,000	20,800	14.0	12.0	27,000	20,200	27,800	8.2	16,200	910	7995113
	ASPT35B14A*		27,200	20,000	14.0	11.5	26,220	19,530	28,400	8.2	16,200	920	10341511
	ASPT36C14A*		27,800	20,600	14.5	12.0	26,800	20,000	28,000	8.5	16,000	960	8197096
	ASPT37B14A*		28,000	20,800	14.5	12.0	27,000	20,200	28,000	8.2	16,000	945	8242620
	ASPT37C14A*		28,400	21,000	15.0	12.5	27,400	20,600	28,000	8.5	16,000	1,045	8242621
	ASPT39C14A*		27,800	20,600	14.5	12.0	26,800	20,000	28,000	8.5	16,000	1,000	10207398
	AVPTC25B14A*		27,400	20,200	14.0	12.0	26,400	19,800	28,000	8.2	16,000	875	8996182
	AVPTC30C14A*		27,800	20,600	15.0	12.5	26,800	20,000	28,000	8.5	16,000	860	7995114
	AVPTC35B14A*		27,200	20,000	14.0	11.5	26,220	19,530	28,400	8.2	16,200	950	10341513
	AVPTC36C14A*		28,000	20,800	14.5	12.0	27,000	20,200	28,000	8.2	16,000	1,000	8903656
	AVPTC37B14A*		27,600	20,400	14.5	12.0	26,600	20,000	28,000	8.3	16,000	925	8996183
	AVPTC37C14A*		27,800	20,600	15.0	12.5	26,800	20,000	28,000	8.5	16,000	930	8996184
	AVPTC39C14A*		27,800	20,600	15.0	12.0	26,800	20,000	28,000	8.5	16,000	965	10207410
	AWUF31XX16A*		27,800	20,600	14.0	12.0	26,800	20,000	28,000	8.2	17,000	980	7995115
	AWUF31XX16A*+TXV		27,800	20,600	14.5	12.0	26,800	20,000	28,000	8.2	17,000	980	7995116
	AWUF32XX16A*		27,800	20,600	14.0	12.0	26,800	20,000	28,000	8.2	17,000	980	8005881
	AWUF32XX16A*+TXV		27,800	20,600	14.5	12.0	26,800	20,000	28,000	8.2	17,000	980	8005882
	AWUF37XX16B*+TXV		27,800	20,600	14.0	12.0	26,800	20,000	28,000	8.2	17,000	1,000	9001131

Outdoor Unit	Indoor Units		Cooling Ratings ^				TVA Ratings [3]		Heating Ratings ^			CFM	AHRI #
	Coils/Air Handlers	Furnaces	Total	Sens.	SEER [1]	EER [2]	Total	Sens.	Hi [4]	HSPF [5]	Low [6]		
GSZ14 0301K* (Contd.)	CA*F3137*6A*	G*VC80603B*B*	28,400	21,600	14.0	11.5	27,400	21,200	28,000	8.2	16,400	950	9924219
	CA*F3137*6A*	G*VC80803B*B*	28,400	21,600	14.0	11.5	27,400	21,200	28,000	8.2	16,400	950	9924225
	CA*F3137*6A*	A*EC960603BNA*	28,400	21,000	14.0	11.5	27,400	20,600	28,200	8.5	16,400	1,020	7995132
	CA*F3137*6A*	A*EC960803BNA*	28,400	21,000	14.0	11.5	27,400	20,600	28,200	8.5	16,600	990	7995133
	CA*F3137*6A*	A*EH800603B*A*	28,400	21,000	14.0	11.5	27,400	20,600	28,000	8.2	16,400	860	7995134
	CA*F3137*6A*	A*VC80604B*B*	28,400	21,000	14.0	11.5	27,400	20,600	28,200	8.5	16,600	995	7995135
	CA*F3137*6A*	A*VC960403BNA*	28,400	21,000	14.5	11.5	27,400	20,600	28,200	8.5	16,600	1,000	7995136
	CA*F3137*6A*	A*VC960603BNA*	28,400	21,000	14.5	11.5	27,400	20,600	28,200	8.5	16,400	910	7995137
	CA*F3137*6A*	A*VC960803BNA*	28,400	21,000	14.5	11.5	27,400	20,600	28,200	8.5	16,400	920	7995138
	CA*F3137*6A*	G*E80603B*B*	28,400	21,000	14.0	11.5	27,400	20,600	28,000	8.2	16,400	860	7995139
	CA*F3137*6A*	G*EC960603BNA*	28,400	21,000	14.0	11.5	27,400	20,600	28,200	8.5	16,400	1,020	7995140
	CA*F3137*6A*	G*EC960803BNA*	28,400	21,000	14.0	11.5	27,400	20,600	28,200	8.5	16,600	990	7995141
	CA*F3137*6A*	G*VC80604B*B*	28,400	21,000	14.0	11.5	27,400	20,600	28,200	8.5	16,600	995	7995142
	CA*F3137*6A*	G*VC960403BNA*	28,400	21,000	14.5	11.5	27,400	20,600	28,200	8.5	16,600	1,000	7995143
	CA*F3137*6A*	G*VC960603BNA*	28,400	21,000	14.5	11.5	27,400	20,600	28,200	8.5	16,400	910	7995144
	CA*F3137*6A*	G*VC960803BNA*	28,400	21,000	14.5	11.5	27,400	20,600	28,200	8.5	16,400	920	7995145
	CA*F3137*6A*+EEP+TXV		28,000	20,800	14.0	11.5	27,000	20,200	28,000	8.2	16,600	870	7995117
	CA*F3137*6A*+TXV	G*VC80603B*B*	28,400	21,600	14.5	12.0	27,400	21,200	28,000	8.2	16,400	950	9924220
	CA*F3137*6A*+TXV	G*VC80803B*B*	28,400	21,600	14.5	12.0	27,400	21,200	28,000	8.2	16,400	950	9924226
	CA*F3137*6A*+TXV	A*EC960603BNA*	28,400	21,000	14.5	12.0	27,400	20,600	28,200	8.5	16,600	1,020	7995118
	CA*F3137*6A*+TXV	A*EC960803BNA*	28,400	21,000	14.5	12.0	27,400	20,600	28,200	8.5	16,600	990	7995119
	CA*F3137*6A*+TXV	A*EH800603B*A*	28,400	21,000	14.5	12.0	27,400	20,600	28,000	8.2	16,400	860	7995120
	CA*F3137*6A*+TXV	A*VC80604B*B*	28,400	21,000	14.5	12.0	27,400	20,600	28,200	8.5	16,600	995	7995121
	CA*F3137*6A*+TXV	A*VC960403BNA*	28,400	21,000	15.0	12.0	27,400	20,600	28,200	8.5	16,600	1,000	7995122
	CA*F3137*6A*+TXV	A*VC960603BNA*	28,400	21,000	15.0	12.0	27,400	20,600	28,200	8.5	16,400	910	7995123
	CA*F3137*6A*+TXV	A*VC960803BNA*	28,400	21,000	15.0	12.0	27,400	20,600	28,200	8.5	16,400	920	7995124
	CA*F3137*6A*+TXV	G*E80603B*B*	28,400	21,000	14.5	12.0	27,400	20,600	28,000	8.2	16,400	860	7995125
	CA*F3137*6A*+TXV	G*EC960603BNA*	28,400	21,000	14.5	12.0	27,400	20,600	28,200	8.5	16,600	1,020	7995126
	CA*F3137*6A*+TXV	G*EC960803BNA*	28,400	21,000	14.5	12.0	27,400	20,600	28,200	8.5	16,600	990	7995127
	CA*F3137*6A*+TXV	G*VC80604B*B*	28,400	21,000	14.5	12.0	27,400	20,600	28,200	8.5	16,600	995	7995128
	CA*F3137*6A*+TXV	G*VC960403BNA*	28,400	21,000	15.0	12.0	27,400	20,600	28,200	8.5	16,600	1,000	7995129
	CA*F3137*6A*+TXV	G*VC960603BNA*	28,400	21,000	15.0	12.0	27,400	20,600	28,200	8.5	16,400	910	7995130
	CA*F3137*6A*+TXV	G*VC960803BNA*	28,400	21,000	15.0	12.0	27,400	20,600	28,200	8.5	16,400	920	7995131
	CA*F3642*6D*+MBVC1200**-1A*		28,000	20,800	14.5	12.0	27,000	20,200	28,000	8.5	16,200	855	7995146
	CA*F3642*6D*+MBVC1200**-1A*+TXV		28,000	20,800	15.0	12.5	27,000	20,200	28,000	8.5	16,200	855	7995147
	CA*F3642*6D*+MBVC1600**-1A*		28,000	20,800	14.5	12.0	27,000	20,200	28,000	8.5	16,200	855	7995148
	CA*F3642*6D*+MBVC1600**-1A*+TXV		28,000	20,800	15.0	12.5	27,000	20,200	28,000	8.5	16,200	855	7995149
	CA*F3743*6D*	G*VC80805D*B*	28,200	21,400	14.5	12.0	27,200	21,000	28,000	8.5	16,200	1,000	9924233
	CA*F3743*6D*	A*VC80805C*B*	28,200	20,800	14.5	12.0	27,200	20,400	28,000	8.5	16,200	880	7995157
	CA*F3743*6D*	A*VC960804CNA*	28,200	20,800	14.5	12.0	27,200	20,400	28,000	8.5	16,200	940	7995158
	CA*F3743*6D*	A*VC961005CNA*	28,200	20,800	14.5	12.0	27,200	20,400	28,000	8.5	16,200	865	7995159
	CA*F3743*6D*	G*VC80805C*B*	28,200	20,800	14.5	12.0	27,200	20,400	28,000	8.5	16,200	880	7995160
	CA*F3743*6D*	G*VC960804CNA*	28,200	20,800	14.5	12.0	27,200	20,400	28,000	8.5	16,200	940	7995161
	CA*F3743*6D*	G*VC961005CNA*	28,200	20,800	14.5	12.0	27,200	20,400	28,000	8.5	16,200	865	7995162
	CA*F3743*6D*+TXV	G*VC80805D*B*	28,200	21,400	15.0	12.5	27,200	21,000	28,000	8.5	16,200	1,000	9924234
	CA*F3743*6D*+TXV		28,000	20,800	14.0	11.5	27,000	20,200	28,000	8.2	16,600	870	7995150
	CA*F3743*6D*+TXV	A*VC80805C*B*	28,200	20,800	15.0	12.5	27,200	20,400	28,000	8.5	16,200	880	7995151
	CA*F3743*6D*+TXV	A*VC960804CNA*	28,200	20,800	15.0	12.5	27,200	20,400	28,000	8.5	16,200	940	7995152
	CA*F3743*6D*+TXV	A*VC961005CNA*	28,200	20,800	15.0	12.5	27,200	20,400	28,000	8.5	16,200	865	7995153
	CA*F3743*6D*+TXV	G*VC80805C*B*	28,200	20,800	15.0	12.5	27,200	20,400	28,000	8.5	16,200	880	7995154
	CA*F3743*6D*+TXV	G*VC960804CNA*	28,200	20,800	15.0	12.5	27,200	20,400	28,000	8.5	16,200	940	7995155
	CA*F3743*6D*+TXV	G*VC961005CNA*	28,200	20,800	15.0	12.5	27,200	20,400	28,000	8.5	16,200	865	7995156
	CHPF3636B6C*	G*VC80603B*B*	28,000	21,400	14.0	11.5	27,000	20,800	28,000	8.2	16,200	950	9924221
	CHPF3636B6C*	G*VC80803B*B*	28,000	21,400	14.0	11.5	27,000	20,800	28,000	8.2	16,200	950	9924227
	CHPF3636B6C*	A*EC960603BNA*	28,400	21,000	14.0	11.5	27,400	20,600	28,400	8.5	16,600	1,020	7995177
	CHPF3636B6C*	A*EC960803BNA*	28,400	21,000	14.0	11.5	27,400	20,600	28,400	8.5	16,600	990	7995178
	CHPF3636B6C*	A*EH800603B*A*	28,000	20,800	14.0	11.5	27,000	20,200	28,000	8.2	16,200	860	7995179
	CHPF3636B6C*	A*VC80604B*B*	28,400	21,000	14.0	11.5	27,400	20,600	28,400	8.5	16,600	995	7995180

See Notes on Page 50.

Outdoor Unit	Indoor Units		Cooling Ratings ^				TVA Ratings [3]		Heating Ratings ^			CFM	AHRI #
	Coils/Air Handlers	Furnaces	Total	Sens.	SEER [1]	EER [2]	Total	Sens.	Hi [4]	HSPF [5]	Low [6]		
GSZ14 0301K* (Contd.)	CHPF3636B6C*	A*VC960403BNA*	28,400	21,000	14.0	11.5	27,400	20,600	28,400	8.5	16,600	1,000	7995181
	CHPF3636B6C*	A*VC960603BNA*	28,200	20,800	14.0	11.5	27,200	20,400	28,400	8.5	16,400	910	7995182
	CHPF3636B6C*	A*VC960803BNA*	28,200	20,800	14.0	11.5	27,200	20,400	28,400	8.5	16,400	920	7995183
	CHPF3636B6C*	G*E80603B*B*	28,000	20,800	14.0	11.5	27,000	20,200	28,000	8.2	16,200	860	7995184
	CHPF3636B6C*	G*EC960603BNA*	28,400	21,000	14.0	11.5	27,400	20,600	28,400	8.5	16,600	1,020	7995185
	CHPF3636B6C*	G*EC960803BNA*	28,400	21,000	14.0	11.5	27,400	20,600	28,400	8.5	16,600	990	7995186
	CHPF3636B6C*	G*VC80604B*B*	28,400	21,000	14.0	11.5	27,400	20,600	28,400	8.5	16,600	995	7995187
	CHPF3636B6C*	G*VC960403BNA*	28,400	21,000	14.0	11.5	27,400	20,600	28,400	8.5	16,600	1,000	7995188
	CHPF3636B6C*	G*VC960603BNA*	28,200	20,800	14.0	11.5	27,200	20,400	28,400	8.5	16,400	910	7995189
	CHPF3636B6C*	G*VC960803BNA*	28,200	20,800	14.0	11.5	27,200	20,400	28,400	8.5	16,400	920	7995190
	CHPF3636B6C*+TXV	G*VC80603B*B*	28,000	21,400	14.5	12.0	27,000	20,800	28,000	8.2	16,200	950	9924222
	CHPF3636B6C*+TXV	G*VC80803B*B*	28,000	21,400	14.5	12.0	27,000	20,800	28,000	8.2	16,200	950	9924228
	CHPF3636B6C*+TXV	A*EC960603BNA*	28,400	21,000	14.5	12.0	27,400	20,600	28,400	8.5	16,600	1,020	7995163
	CHPF3636B6C*+TXV	A*EC960803BNA*	28,400	21,000	14.5	12.0	27,400	20,600	28,400	8.5	16,600	990	7995164
	CHPF3636B6C*+TXV	A*EH800603B*A*	28,000	20,800	14.5	12.0	27,000	20,200	28,000	8.2	16,200	860	7995165
	CHPF3636B6C*+TXV	A*VC80604B*B*	28,400	21,000	14.5	12.0	27,400	20,600	28,400	8.5	16,600	995	7995166
	CHPF3636B6C*+TXV	A*VC960403BNA*	28,400	21,000	14.5	12.0	27,400	20,600	28,400	8.5	16,600	1,000	7995167
	CHPF3636B6C*+TXV	A*VC960603BNA*	28,200	20,800	14.5	12.0	27,200	20,400	28,400	8.5	16,400	910	7995168
	CHPF3636B6C*+TXV	A*VC960803BNA*	28,200	20,800	14.5	12.0	27,200	20,400	28,400	8.5	16,400	920	7995169
	CHPF3636B6C*+TXV	G*E80603B*B*	28,000	20,800	14.5	12.0	27,000	20,200	28,000	8.2	16,200	860	7995170
	CHPF3636B6C*+TXV	G*EC960603BNA*	28,400	21,000	14.5	12.0	27,400	20,600	28,400	8.5	16,600	1,020	7995171
	CHPF3636B6C*+TXV	G*EC960803BNA*	28,400	21,000	14.5	12.0	27,400	20,600	28,400	8.5	16,600	990	7995172
	CHPF3636B6C*+TXV	G*VC80604B*B*	28,400	21,000	14.5	12.0	27,400	20,600	28,400	8.5	16,600	995	7995173
	CHPF3636B6C*+TXV	G*VC960403BNA*	28,400	21,000	14.5	12.0	27,400	20,600	28,400	8.5	16,600	1,000	7995174
	CHPF3636B6C*+TXV	G*VC960603BNA*	28,200	20,800	14.5	12.0	27,200	20,400	28,400	8.5	16,400	910	7995175
	CHPF3636B6C*+TXV	G*VC960803BNA*	28,200	20,800	14.5	12.0	27,200	20,400	28,400	8.5	16,400	920	7995176
	CHPF3642C6C*	G*VC80805D*B*	28,000	21,400	14.5	12.0	27,000	20,800	28,000	8.2	16,200	1,000	9924235
	CHPF3642C6C*	A*VC80805C*B*	28,000	20,800	14.5	12.0	27,000	20,200	28,000	8.2	16,200	880	7995201
	CHPF3642C6C*	A*VC960804CNA*	28,200	20,800	14.5	12.0	27,200	20,400	28,400	8.5	16,400	940	7995202
	CHPF3642C6C*	A*VC961005CNA*	28,000	20,800	14.5	12.0	27,000	20,200	28,000	8.2	16,200	865	7995203
	CHPF3642C6C*	G*VC80805C*B*	28,000	20,800	14.5	12.0	27,000	20,200	28,000	8.2	16,200	880	7995204
	CHPF3642C6C*	G*VC960804CNA*	28,200	20,800	14.5	12.0	27,200	20,400	28,400	8.5	16,400	940	7995205
	CHPF3642C6C*	G*VC961005CNA*	28,000	20,800	14.5	12.0	27,000	20,200	28,000	8.2	16,200	865	7995206
	CHPF3642C6C*+MBVC1200**-1A*		28,000	20,800	14.5	12.0	27,000	20,200	28,000	8.5	16,200	855	7995191
	CHPF3642C6C*+MBVC1200**-1A*+TXV		28,000	20,800	15.0	12.5	27,000	20,200	28,000	8.5	16,200	855	7995192
	CHPF3642C6C*+MBVC1600**-1A*		28,000	20,800	14.5	12.0	27,000	20,200	28,000	8.5	16,200	855	7995193
	CHPF3642C6C*+MBVC1600**-1A*+TXV		28,000	20,800	15.0	12.5	27,000	20,200	28,000	8.5	16,200	855	7995194
	CHPF3642C6C*+TXV	G*VC80805D*B*	28,000	21,400	15.0	12.5	27,000	20,800	28,000	8.2	16,200	1,000	9924236
	CHPF3642C6C*+TXV	A*VC80805C*B*	28,000	20,800	15.0	12.5	27,000	20,200	28,000	8.2	16,200	880	7995195
	CHPF3642C6C*+TXV	A*VC960804CNA*	28,200	20,800	15.0	12.5	27,200	20,400	28,400	8.5	16,400	940	7995196
	CHPF3642C6C*+TXV	A*VC961005CNA*	28,000	20,800	15.0	12.5	27,000	20,200	28,000	8.2	16,200	865	7995197
	CHPF3642C6C*+TXV	G*VC80805C*B*	28,000	20,800	15.0	12.5	27,000	20,200	28,000	8.2	16,200	880	7995198
	CHPF3642C6C*+TXV	G*VC960804CNA*	28,200	20,800	15.0	12.5	27,200	20,400	28,400	8.5	16,400	940	7995199
	CHPF3642C6C*+TXV	G*VC961005CNA*	28,000	20,800	15.0	12.5	27,000	20,200	28,000	8.2	16,200	865	7995200
	CHPF3743C6B*+EEP+TXV		28,000	20,800	14.0	11.5	27,000	20,200	28,000	8.2	17,000	870	7995207
	CSCF3642N6D*	G*VC80603B*B*	28,400	21,600	14.0	11.5	27,400	21,200	28,200	8.5	16,200	950	9924223
	CSCF3642N6D*	G*VC80803B*B*	28,400	21,600	14.0	11.5	27,400	21,200	28,200	8.5	16,200	950	9924229
	CSCF3642N6D*	G*VC80804C*B*	28,400	21,600	14.0	11.5	27,400	21,200	28,200	8.5	16,600	950	9924231
	CSCF3642N6D*	G*VC80805D*B*	28,400	21,600	14.5	12.0	27,400	21,200	28,200	8.5	16,200	1,000	9924237
	CSCF3642N6D*	A*EC960603BNA*	28,400	21,000	14.0	11.5	27,400	20,600	28,200	8.5	16,600	1,020	7995233
	CSCF3642N6D*	A*EC960803BNA*	28,400	21,000	14.0	11.5	27,400	20,600	28,200	8.5	16,600	990	7995234
	CSCF3642N6D*	A*EH800603B*A*	28,400	21,000	14.0	11.5	27,400	20,600	28,200	8.5	16,200	860	7995235
	CSCF3642N6D*	A*VC80604B*B*	28,400	21,000	14.0	11.5	27,400	20,600	28,200	8.5	16,600	995	7995236
	CSCF3642N6D*	A*VC80805C*B*	28,400	21,000	14.5	12.0	27,400	20,600	28,200	8.5	16,200	880	7995237
	CSCF3642N6D*	A*VC960403BNA*	28,400	21,000	14.0	11.5	27,400	20,600	28,200	8.5	16,600	1,000	7995238
	CSCF3642N6D*	A*VC960603BNA*	28,400	21,000	14.0	11.5	27,400	20,600	28,200	8.5	16,400	910	7995239
	CSCF3642N6D*	A*VC960803BNA*	28,400	21,000	14.0	11.5	27,400	20,600	28,200	8.5	16,400	920	7995240
	CSCF3642N6D*	A*VC960804CNA*	28,400	21,000	14.5	12.0	27,400	20,600	28,200	8.5	16,400	940	7995241

See Notes on Page 50.

Outdoor Unit	Indoor Units		Cooling Ratings ^				TVA Ratings [3]		Heating Ratings ^			CFM	AHRI #
	Coils/Air Handlers	Furnaces	Total	Sens.	SEER [1]	EER [2]	Total	Sens.	Hi [4]	HSPF [5]	Low [6]		
GSZ14 0301K* (Contd.)	CSCF3642N6D*	A*VC961005CNA*	28,400	21,000	14.5	12.0	27,400	20,600	28,200	8.5	16,200	865	7995242
	CSCF3642N6D*	G*E80603B*B*	28,400	21,000	14.0	11.5	27,400	20,600	28,200	8.5	16,200	860	7995243
	CSCF3642N6D*	G*EC960603BNA*	28,400	21,000	14.0	11.5	27,400	20,600	28,200	8.5	16,600	1,020	7995244
	CSCF3642N6D*	G*EC960803BNA*	28,400	21,000	14.0	11.5	27,400	20,600	28,200	8.5	16,600	990	7995245
	CSCF3642N6D*	G*VC80604B*B*	28,400	21,000	14.0	11.5	27,400	20,600	28,200	8.5	16,600	995	7995246
	CSCF3642N6D*	G*VC80805C*B*	28,400	21,000	14.5	12.0	27,400	20,600	28,200	8.5	16,200	880	7995247
	CSCF3642N6D*	G*VC960403BNA*	28,400	21,000	14.0	11.5	27,400	20,600	28,200	8.5	16,600	1,000	7995248
	CSCF3642N6D*	G*VC960603BNA*	28,400	21,000	14.0	11.5	27,400	20,600	28,200	8.5	16,400	910	7995249
	CSCF3642N6D*	G*VC960803BNA*	28,400	21,000	14.0	11.5	27,400	20,600	28,200	8.5	16,400	920	7995250
	CSCF3642N6D*	G*VC960804CNA*	28,400	21,000	14.5	12.0	27,400	20,600	28,200	8.5	16,400	940	7995251
	CSCF3642N6D*	G*VC961005CNA*	28,400	21,000	14.5	12.0	27,400	20,600	28,200	8.5	16,200	865	7995252
	CSCF3642N6D*+EEP+TXV		28,000	20,800	14.0	11.5	27,000	20,200	28,800	8.2	17,000	870	7995208
	CSCF3642N6D*+MBVC1200**-1A*		28,400	21,000	14.5	12.0	27,400	20,600	28,200	8.5	16,200	855	7995209
	CSCF3642N6D*+MBVC1200**-1A*+TXV		28,400	21,000	15.0	12.5	27,400	20,600	28,200	8.5	16,200	855	7995210
	CSCF3642N6D*+MBVC1600**-1A*		28,400	21,000	14.5	12.0	27,400	20,600	28,200	8.5	16,200	855	7995211
	CSCF3642N6D*+MBVC1600**-1A*+TXV		28,400	21,000	15.0	12.5	27,400	20,600	28,200	8.5	16,200	855	7995212
	CSCF3642N6D*+TXV	G*VC80603B*B*	28,400	21,600	14.5	12.0	27,400	21,200	28,200	8.5	16,200	950	9924224
	CSCF3642N6D*+TXV	G*VC80803B*B*	28,400	21,600	14.5	12.0	27,400	21,200	28,200	8.5	16,200	950	9924230
	CSCF3642N6D*+TXV	G*VC80804C*B*	28,400	21,600	14.5	12.0	27,400	21,200	28,200	8.5	16,600	950	9924232
	CSCF3642N6D*+TXV	G*VC80805D*B*	28,400	21,600	15.0	12.5	27,400	21,200	28,200	8.5	16,200	1,000	9924238
	CSCF3642N6D*+TXV	A*EC960603BNA*	28,400	21,000	14.5	12.0	27,400	20,600	28,200	8.5	16,600	1,020	7995213
	CSCF3642N6D*+TXV	A*EC960803BNA*	28,400	21,000	14.5	12.0	27,400	20,600	28,200	8.5	16,600	990	7995214
	CSCF3642N6D*+TXV	A*EH800603B*A*	28,400	21,000	14.5	12.0	27,400	20,600	28,200	8.5	16,200	860	7995215
	CSCF3642N6D*+TXV	A*VC80604B*B*	28,400	21,000	14.5	12.0	27,400	20,600	28,200	8.5	16,600	995	7995216
	CSCF3642N6D*+TXV	A*VC80805C*B*	28,400	21,000	15.0	12.5	27,400	20,600	28,200	8.5	16,200	880	7995217
	CSCF3642N6D*+TXV	A*VC960403BNA*	28,400	21,000	14.5	12.0	27,400	20,600	28,200	8.5	16,600	1,000	7995218
	CSCF3642N6D*+TXV	A*VC960603BNA*	28,400	21,000	14.5	12.0	27,400	20,600	28,200	8.5	16,400	910	7995219
	CSCF3642N6D*+TXV	A*VC960803BNA*	28,400	21,000	14.5	12.0	27,400	20,600	28,200	8.5	16,400	920	7995220
	CSCF3642N6D*+TXV	A*VC960804CNA*	28,400	21,000	15.0	12.5	27,400	20,600	28,200	8.5	16,400	940	7995221
	CSCF3642N6D*+TXV	A*VC961005CNA*	28,400	21,000	15.0	12.5	27,400	20,600	28,200	8.5	16,200	865	7995222
	CSCF3642N6D*+TXV	G*E80603B*B*	28,400	21,000	14.5	12.0	27,400	20,600	28,200	8.5	16,200	860	7995223
	CSCF3642N6D*+TXV	G*EC960603BNA*	28,400	21,000	14.5	12.0	27,400	20,600	28,200	8.5	16,600	1,020	7995224
	CSCF3642N6D*+TXV	G*EC960803BNA*	28,400	21,000	14.5	12.0	27,400	20,600	28,200	8.5	16,600	990	7995225
	CSCF3642N6D*+TXV	G*VC80604B*B*	28,400	21,000	14.5	12.0	27,400	20,600	28,200	8.5	16,600	995	7995226
	CSCF3642N6D*+TXV	G*VC80805C*B*	28,400	21,000	15.0	12.5	27,400	20,600	28,200	8.5	16,200	880	7995227
	CSCF3642N6D*+TXV	G*VC960403BNA*	28,400	21,000	14.5	12.0	27,400	20,600	28,200	8.5	16,600	1,000	7995228
	CSCF3642N6D*+TXV	G*VC960603BNA*	28,400	21,000	14.5	12.0	27,400	20,600	28,200	8.5	16,400	910	7995229
	CSCF3642N6D*+TXV	G*VC960803BNA*	28,400	21,000	14.5	12.0	27,400	20,600	28,200	8.5	16,400	920	7995230
	CSCF3642N6D*+TXV	G*VC960804CNA*	28,400	21,000	15.0	12.5	27,400	20,600	28,200	8.5	16,400	940	7995231
	CSCF3642N6D*+TXV	G*VC961005CNA*	28,400	21,000	15.0	12.5	27,400	20,600	28,200	8.5	16,200	865	7995232
GSZ14 0311A*	ACNF31XX16A*+TXV		27,000	20,000	14.0	11.5	26,000	19,500	27,600	8.2	14,400	935	9085973
	ARUF29B14A*+TXV		28,000	20,600	14.0	12.0	27,000	20,200	31,000	8.2	19,000	870	9085974
	ARUF37C14A*+TXV		28,000	20,600	14.0	12.0	27,000	20,200	28,800	8.2	19,600	985	9085975
	ASPT35B14A*		28,000	21,280	14.0	12.0	26,990	20,780	28,400	8.2	19,000	920	10341512
	ASPT36C14A*		28,400	21,000	14.5	12.2	27,400	20,600	28,000	8.5	16,000	965	9085976
	ASPT37C14A*		28,800	21,200	15.0	12.5	27,800	20,800	29,000	8.5	16,000	975	9085977
	ASPT39C14A*		28,400	21,000	14.5	12.2	27,400	20,600	28,000	8.5	16,000	1,000	10207399
	AVPTC35B14A*		28,000	21,280	14.0	12.0	26,990	20,780	28,400	8.2	19,000	950	10341514
	AVPTC39C14A*		29,000	21,400	15.0	12.5	27,400	20,600	29,000	8.5	16,000	965	10207411
	AWUF31XX16A*		28,000	20,600	14.0	12.0	27,000	20,200	28,000	8.2	15,600	945	9085978
	AWUF31XX16A*+TXV		28,000	20,600	15.0	12.5	27,000	20,200	28,000	8.5	15,600	965	9085979
	AWUF32XX16A*		28,000	20,600	14.0	12.0	27,000	20,200	28,000	8.2	15,600	945	9085980
	AWUF32XX16A*+TXV		28,000	20,600	15.0	12.5	27,000	20,200	28,000	8.5	15,600	965	9085981
GSZ14 0361K*	ARUF37C14A*+TXV		34,600	25,600	14.0	11.5	33,400	25,000	32,800	8.2	19,000	1,010	7995253
	ARUF37D14A*		34,400	25,400	14.0	11.5	33,200	24,800	32,800	8.2	20,000	1,070	7995254
	ASPT37B14A*		34,000	25,200	14.0	12.0	32,800	24,600	32,600	8.2	20,000	1,120	8242623
	ASPT37C14A*		34,600	25,600	14.5	12.0	33,400	25,000	32,600	8.5	20,000	1,120	8242626
	ASPT39C14A*		34,000	25,200	14.0	11.5	32,800	24,600	32,000	8.2	20,000	1,220	10207400

See Notes on Page 50.

Outdoor Unit	Indoor Units		Cooling Ratings ^				TVA Ratings [3]		Heating Ratings ^			CFM	AHRI #
	Coils/Air Handlers	Furnaces	Total	Sens.	SEER [1]	EER [2]	Total	Sens.	Hi [4]	HSPF [5]	Low [6]		
GSZ14 0361K* (Contd.)	ASPT47C14A*		34,400	25,400	14.5	12.0	33,200	24,800	32,600	8.5	20,000	1,075	8242627
	ASPT47D14A*		34,800	25,800	15.0	12.5	33,600	25,200	32,600	8.5	20,000	1,180	8242629
	AVPTC36C14A*		34,400	25,400	14.0	11.5	33,200	24,800	32,600	8.2	20,000	1,150	7995255
	AVPTC37C14A*		34,400	25,400	14.5	12.0	33,200	24,800	32,600	8.5	20,000	1,130	8996185
	AVPTC37D14A*		34,400	25,400	14.5	12.0	33,200	24,800	32,600	8.5	20,000	1,145	8996186
	AVPTC39C14A*		34,000	25,200	14.0	11.5	32,800	24,600	32,000	8.2	20,000	1,220	10207412
	AVPTC49D14A*		34,600	25,600	15.0	12.5	33,400	25,000	32,600	8.5	20,000	1,075	8996187
	CA*F3137*6A*+MBVC1200**-1A*+TXV		34,600	25,600	14.0	11.5	33,400	25,000	32,000	8.2	19,000	1,050	8693535
	CA*F3137*6A*+TXV	G*VC80603B*B*	34,600	25,800	14.0	11.5	33,400	25,200	32,200	8.2	19,600	1,100	9924239
	CA*F3137*6A*+TXV	G*VC80803B*B*	34,600	25,800	14.0	11.5	33,400	25,200	32,200	8.2	19,600	1,150	9924240
	CA*F3137*6A*+TXV	A*EC960603BNA*	34,600	25,600	14.0	11.5	33,400	25,000	32,000	8.2	19,600	1,020	7995256
	CA*F3137*6A*+TXV	A*EC960803BNA*	34,600	25,600	14.0	11.5	33,400	25,000	32,000	8.2	19,600	1,010	7995257
	CA*F3137*6A*+TXV	A*EH800603B*A*	34,600	25,600	14.0	11.5	33,400	25,000	32,200	8.2	19,600	1,100	7995258
	CA*F3137*6A*+TXV	A*VC80604B*B*	34,600	25,600	14.0	11.5	33,400	25,000	32,000	8.2	19,600	1,100	7995259
	CA*F3137*6A*+TXV	A*VC960403BNA*	34,600	25,600	14.0	11.5	33,400	25,000	32,000	8.2	19,600	1,080	7995260
	CA*F3137*6A*+TXV	A*VC960603BNA*	34,600	25,600	14.0	11.5	33,400	25,000	32,000	8.2	19,600	1,060	7995261
	CA*F3137*6A*+TXV	A*VC960803BNA*	34,600	25,600	14.0	11.5	33,400	25,000	32,000	8.2	19,600	1,100	7995262
	CA*F3137*6A*+TXV	G*E80603B*B*	34,600	25,600	14.0	11.5	33,400	25,000	32,200	8.2	19,600	1,100	7995263
	CA*F3137*6A*+TXV	G*EC960603BNA*	34,600	25,600	14.0	11.5	33,400	25,000	32,000	8.2	19,600	1,020	7995264
	CA*F3137*6A*+TXV	G*EC960803BNA*	34,600	25,600	14.0	11.5	33,400	25,000	32,000	8.2	19,600	1,010	7995265
	CA*F3137*6A*+TXV	G*VC80604B*B*	34,600	25,600	14.0	11.5	33,400	25,000	32,000	8.2	19,600	1,100	7995266
	CA*F3137*6A*+TXV	G*VC960403BNA*	34,600	25,600	14.0	11.5	33,400	25,000	32,000	8.2	19,600	1,080	7995267
	CA*F3137*6A*+TXV	G*VC960603BNA*	34,600	25,600	14.0	11.5	33,400	25,000	32,000	8.2	19,600	1,060	7995268
	CA*F3137*6A*+TXV	G*VC960803BNA*	34,600	25,600	14.0	11.5	33,400	25,000	32,000	8.2	19,600	1,100	7995269
	CA*F4860*6D*	G*VC80805D*B*	34,600	25,800	14.0	11.5	33,400	25,200	32,200	8.5	20,000	1,100	9924241
	CA*F4860*6D*	A*EC961004CNA*	35,600	26,400	14.0	11.5	34,200	25,800	32,800	8.5	20,000	1,200	7995286
	CA*F4860*6D*	A*EH800805C*A*	34,600	25,600	14.0	11.5	33,400	25,000	32,200	8.5	20,000	1,030	7995287
	CA*F4860*6D*	A*EH801005C*A*	35,600	26,400	14.0	11.5	34,200	25,800	32,200	8.5	20,000	1,090	7995288
	CA*F4860*6D*	A*VC80805C*B*	34,600	25,600	14.0	11.5	33,400	25,000	32,200	8.5	20,000	1,070	7995289
	CA*F4860*6D*	A*VC81005C*B*	34,600	25,600	14.0	11.5	33,400	25,000	32,200	8.5	20,000	1,070	7995290
	CA*F4860*6D*	A*VC960804CNA*	34,800	25,800	14.0	11.5	33,600	25,200	32,400	8.5	20,000	1,080	7995291
	CA*F4860*6D*	A*VC961005CNA*	34,800	25,800	14.0	11.5	33,600	25,200	32,400	8.5	20,000	1,100	7995292
	CA*F4860*6D*	G*E80805C*B*	34,600	25,600	14.0	11.5	33,400	25,000	32,200	8.5	20,000	1,030	7995293
	CA*F4860*6D*	G*E81005C*B*	35,600	26,400	14.0	11.5	34,200	25,800	32,200	8.5	20,000	1,090	7995294
	CA*F4860*6D*	G*EC961004CNA*	35,600	26,400	14.0	11.5	34,200	25,800	32,800	8.5	20,000	1,200	7995295
	CA*F4860*6D*	G*VC80805C*B*	34,600	25,600	14.0	11.5	33,400	25,000	32,200	8.5	20,000	1,070	7995296
	CA*F4860*6D*	G*VC81005C*B*	34,600	25,600	14.0	11.5	33,400	25,000	32,200	8.5	20,000	1,070	7995297
	CA*F4860*6D*	G*VC960804CNA*	34,800	25,800	14.0	11.5	33,600	25,200	32,400	8.5	20,000	1,080	7995298
	CA*F4860*6D*	G*VC961005CNA*	34,800	25,800	14.0	11.5	33,600	25,200	32,400	8.5	20,000	1,100	7995299
	CA*F4860*6D*+MBVC2000**-1A*		35,600	26,400	14.5	12.0	34,200	25,800	32,800	9.0	20,000	1,160	7995270
	CA*F4860*6D*+MBVC2000**-1A*+TXV		35,600	26,400	15.0	12.5	34,200	25,800	32,800	9.0	20,000	1,160	7995271
	CA*F4860*6D*+TXV	G*VC80805D*B*	34,600	25,800	14.5	12.0	33,400	25,200	32,200	8.5	20,000	1,100	9924242
	CA*F4860*6D*+TXV	A*EC961004CNA*	35,600	26,400	14.5	12.0	34,200	25,800	32,800	8.5	20,000	1,200	7995272
	CA*F4860*6D*+TXV	A*EH800805C*A*	34,600	25,600	14.5	12.0	33,400	25,000	32,200	8.5	20,000	1,030	7995273
	CA*F4860*6D*+TXV	A*EH801005C*A*	35,600	26,400	14.5	12.0	34,200	25,800	32,200	8.5	20,000	1,090	7995274
	CA*F4860*6D*+TXV	A*VC80805C*B*	34,600	25,600	14.5	12.0	33,400	25,000	32,200	8.5	20,000	1,070	7995275
	CA*F4860*6D*+TXV	A*VC81005C*B*	34,600	25,600	14.5	12.0	33,400	25,000	32,200	8.5	20,000	1,070	7995276
	CA*F4860*6D*+TXV	A*VC960804CNA*	34,800	25,800	14.5	12.0	33,600	25,200	32,400	8.5	20,000	1,080	7995277
	CA*F4860*6D*+TXV	A*VC961005CNA*	34,800	25,800	14.5	12.0	33,600	25,200	32,400	8.5	20,000	1,100	7995278
	CA*F4860*6D*+TXV	G*E80805C*B*	34,600	25,600	14.5	12.0	33,400	25,000	32,200	8.5	20,000	1,030	7995279
	CA*F4860*6D*+TXV	G*E81005C*B*	35,600	26,400	14.5	12.0	34,200	25,800	32,200	8.5	20,000	1,090	7995280
	CA*F4860*6D*+TXV	G*EC961004CNA*	35,600	26,400	14.5	12.0	34,200	25,800	32,800	8.5	20,000	1,200	7995281
	CA*F4860*6D*+TXV	G*VC80805C*B*	34,600	25,600	14.5	12.0	33,400	25,000	32,200	8.5	20,000	1,070	7995282
	CA*F4860*6D*+TXV	G*VC81005C*B*	34,600	25,600	14.5	12.0	33,400	25,000	32,200	8.5	20,000	1,070	7995283
	CA*F4860*6D*+TXV	G*VC960804CNA*	34,800	25,800	14.5	12.0	33,600	25,200	32,400	8.5	20,000	1,080	7995284
	CA*F4860*6D*+TXV	G*VC961005CNA*	34,800	25,800	14.5	12.0	33,600	25,200	32,400	8.5	20,000	1,100	7995285
	CA*F4961*6D*	A*EC961205DNA*	35,000	26,000	14.5	11.5	33,800	25,200	32,600	8.5	20,000	1,045	7995310
	CA*F4961*6D*	A*VC961205DNA*	34,800	25,800	14.5	12.0	33,600	25,200	32,600	8.5	20,000	1,050	7995311

Outdoor Unit	Indoor Units		Cooling Ratings ^				TVA Ratings [3]		Heating Ratings ^			CFM	AHRI #
	Coils/Air Handlers	Furnaces	Total	Sens.	SEER [1]	EER [2]	Total	Sens.	Hi [4]	HSPF [5]	Low [6]		
GSZ14 0361K* (Contd.)	CA*F4961*6D*	G*E80805D*A*	35,600	26,400	14.5	11.5	34,200	25,800	33,000	8.5	20,000	1,275	7995312
	CA*F4961*6D*	G*EC961205DNA*	35,000	26,000	14.5	11.5	33,800	25,200	32,600	8.5	20,000	1,045	7995313
	CA*F4961*6D*	G*VC961205DNA*	34,800	25,800	14.5	12.0	33,600	25,200	32,600	8.5	20,000	1,050	7995314
	CA*F4961*6D*	A*EH800805D*A*	35,600	26,400	14.5	11.5	34,200	25,800	33,000	8.5	20,000	1,275	7999168
	CA*F4961*6D*	G*VC960603BNA*	34,800	25,800	14.0	11.5	33,600	25,200	32,600	8.5	20,000	1,060	8283922
	CA*F4961*6D*+EEP+TXV		35,400	26,200	14.0	11.5	34,000	25,600	33,200	8.2	20,600	1,070	7995300
	CA*F4961*6D*+MBVC1200**-1A*		35,600	26,400	14.5	12.0	34,200	25,800	32,400	8.5	20,000	1,050	7995301
	CA*F4961*6D*+MBVC1200**-1A*+TXV		35,600	26,400	15.0	12.5	34,200	25,800	32,400	8.5	20,000	1,050	7995302
	CA*F4961*6D*+MBVC1600**-1A*		35,600	26,400	14.5	12.0	34,200	25,800	32,400	8.5	20,000	1,075	7995303
	CA*F4961*6D*+MBVC1600**-1A*+TXV		35,600	26,400	15.0	12.5	34,200	25,800	32,400	8.5	20,000	1,075	7995304
	CA*F4961*6D*+TXV	A*EC961205DNA*	35,000	26,000	15.0	12.0	33,800	25,200	32,600	8.5	20,000	1,045	7995305
	CA*F4961*6D*+TXV	A*VC961205DNA*	34,800	25,800	15.0	12.5	33,600	25,200	32,600	8.5	20,000	1,050	7995306
	CA*F4961*6D*+TXV	G*E80805D*A*	35,600	26,400	15.0	12.0	34,200	25,800	33,000	8.5	20,000	1,275	7995307
	CA*F4961*6D*+TXV	G*EC961205DNA*	35,000	26,000	15.0	12.0	33,800	25,200	32,600	8.5	20,000	1,045	7995308
	CA*F4961*6D*+TXV	G*VC961205DNA*	34,800	25,800	15.0	12.5	33,600	25,200	32,600	8.5	20,000	1,050	7995309
	CA*F4961*6D*+TXV	A*EH800805D*A*	35,600	26,400	15.0	12.0	34,200	25,800	33,000	8.5	20,000	1,275	7999167
	CA*F4961*6D*+TXV	G*VC960804CNA*	35,000	26,000	14.5	12.0	33,800	25,200	32,400	8.5	19,000	1,080	8669636
	CAPT4961*4A*+EEP		34,600	25,600	14.0	11.5	33,400	25,000	33,200	8.2	20,600	1,070	8656479
	CHPF3743C6B*	G*VC80805D*B*	35,000	26,000	14.0	11.5	33,800	25,400	32,000	8.5	20,000	1,100	9924243
	CHPF3743C6B*	A*EC961004CNA*	35,000	26,000	14.0	11.5	33,800	25,200	32,800	8.5	20,000	1,200	7995329
	CHPF3743C6B*	A*EH800805C*A*	35,000	26,000	14.0	11.5	33,800	25,200	32,000	8.5	20,000	1,030	7995330
	CHPF3743C6B*	A*EH801005C*A*	34,600	25,600	14.0	11.5	33,400	25,000	32,800	8.5	20,000	1,030	7995331
	CHPF3743C6B*	A*VC80805C*B*	35,000	26,000	14.0	11.5	33,800	25,200	32,000	8.5	20,000	1,070	7995332
	CHPF3743C6B*	A*VC81005C*B*	34,600	25,600	14.0	11.5	33,400	25,000	32,000	8.5	20,000	1,070	7995333
	CHPF3743C6B*	A*VC960804CNA*	34,600	25,600	14.0	11.5	33,400	25,000	32,000	8.5	20,000	1,080	7995334
	CHPF3743C6B*	A*VC961005CNA*	34,600	25,600	14.0	11.5	33,400	25,000	32,000	8.5	20,000	1,100	7995335
	CHPF3743C6B*	G*E80805C*B*	35,000	26,000	14.0	11.5	33,800	25,200	32,000	8.5	20,000	1,030	7995336
	CHPF3743C6B*	G*E81005C*B*	34,600	25,600	14.0	11.5	33,400	25,000	32,800	8.5	20,000	1,030	7995337
	CHPF3743C6B*	G*EC961004CNA*	35,000	26,000	14.0	11.5	33,800	25,200	32,800	8.5	20,000	1,200	7995338
	CHPF3743C6B*	G*VC80805C*B*	35,000	26,000	14.0	11.5	33,800	25,200	32,000	8.5	20,000	1,070	7995339
	CHPF3743C6B*	G*VC81005C*B*	34,600	25,600	14.0	11.5	33,400	25,000	32,000	8.5	20,000	1,070	7995340
	CHPF3743C6B*	G*VC960804CNA*	34,600	25,600	14.0	11.5	33,400	25,000	32,000	8.5	20,000	1,080	7995341
	CHPF3743C6B*	G*VC961005CNA*	34,600	25,600	14.0	11.5	33,400	25,000	32,000	8.5	20,000	1,100	7995342
	CHPF3743C6B*+EEP+TXV		34,600	25,600	14.0	11.5	33,400	25,000	33,000	8.2	20,000	1,080	7995026
	CHPF3743C6B*+TXV	G*VC80805D*B*	35,000	26,000	14.5	12.0	33,800	25,400	32,000	8.5	20,000	1,100	9924244
	CHPF3743C6B*+TXV	A*EC961004CNA*	35,000	26,000	14.5	12.0	33,800	25,200	32,800	8.5	20,000	1,200	7995315
	CHPF3743C6B*+TXV	A*EH800805C*A*	35,000	26,000	14.5	12.0	33,800	25,200	32,000	8.5	20,000	1,030	7995316
	CHPF3743C6B*+TXV	A*EH801005C*A*	34,600	25,600	14.5	12.0	33,400	25,000	32,800	8.5	20,000	1,030	7995317
	CHPF3743C6B*+TXV	A*VC80805C*B*	35,000	26,000	14.5	12.0	33,800	25,200	32,000	8.5	20,000	1,070	7995318
	CHPF3743C6B*+TXV	A*VC81005C*B*	34,600	25,600	14.5	12.0	33,400	25,000	32,000	8.5	20,000	1,070	7995319
	CHPF3743C6B*+TXV	A*VC960804CNA*	34,600	25,600	14.5	12.0	33,400	25,000	32,000	8.5	20,000	1,080	7995320
	CHPF3743C6B*+TXV	A*VC961005CNA*	34,600	25,600	14.5	12.0	33,400	25,000	32,000	8.5	20,000	1,100	7995321
	CHPF3743C6B*+TXV	G*E80805C*B*	35,000	26,000	14.5	12.0	33,800	25,200	32,000	8.5	20,000	1,030	7995322
	CHPF3743C6B*+TXV	G*E81005C*B*	34,600	25,600	14.5	12.0	33,400	25,000	32,800	8.5	20,000	1,030	7995323
	CHPF3743C6B*+TXV	G*EC961004CNA*	35,000	26,000	14.5	12.0	33,800	25,200	32,800	8.5	20,000	1,200	7995324
	CHPF3743C6B*+TXV	G*VC80805C*B*	35,000	26,000	14.5	12.0	33,800	25,200	32,000	8.5	20,000	1,070	7995325
	CHPF3743C6B*+TXV	G*VC81005C*B*	34,600	25,600	14.5	12.0	33,400	25,000	32,000	8.5	20,000	1,070	7995326
	CHPF3743C6B*+TXV	G*VC960804CNA*	34,600	25,600	14.5	12.0	33,400	25,000	32,000	8.5	20,000	1,080	7995327
	CHPF3743C6B*+TXV	G*VC961005CNA*	34,600	25,600	14.5	12.0	33,400	25,000	32,000	8.5	20,000	1,100	7995328
	CHPF4860D6D*	A*EC961205DNA*	35,000	26,000	14.0	11.5	33,800	25,200	32,000	8.5	20,000	1,045	7995352
	CHPF4860D6D*	A*VC961205DNA*	35,000	26,000	14.0	11.5	33,800	25,200	32,000	8.5	20,000	1,050	7995353
	CHPF4860D6D*	G*E80805D*A*	35,600	26,400	14.0	11.5	34,200	25,800	32,800	8.5	20,000	1,275	7995354
	CHPF4860D6D*	G*EC961205DNA*	35,000	26,000	14.0	11.5	33,800	25,200	32,000	8.5	20,000	1,045	7995355
	CHPF4860D6D*	G*VC961205DNA*	35,000	26,000	14.0	11.5	33,800	25,200	32,000	8.5	20,000	1,050	7995356
	CHPF4860D6D*	A*EH800805D*A*	35,600	26,400	14.0	11.5	34,200	25,800	32,800	8.5	20,000	1,275	7999172
	CHPF4860D6D*+MBVC1600**-1A*		35,400	26,200	14.5	12.0	34,000	25,600	32,400	8.5	20,000	1,075	7995343
	CHPF4860D6D*+MBVC1600**-1A*+TXV		35,400	26,200	15.0	12.5	34,000	25,600	32,400	8.5	20,000	1,075	7995344

See Notes on Page 50.

Outdoor Unit	Indoor Units		Cooling Ratings ^				TVA Ratings [3]		Heating Ratings ^			CFM	AHRI #
	Coils/Air Handlers	Furnaces	Total	Sens.	SEER [1]	EER [2]	Total	Sens.	Hi [4]	HSPF [5]	Low [6]		
GSZ14 0361K* (Contd.)	CHPF4860D6D*+MBVC2000**-1A*		36,000	26,600	14.5	12.0	34,600	26,000	32,600	8.5	20,000	1,275	7995345
	CHPF4860D6D*+MBVC2000**-1A*+TXV		36,000	26,600	15.0	12.5	34,600	26,000	32,600	8.5	20,000	1,275	7995346
	CHPF4860D6D*+TXV	A*EC961205DNA*	35,000	26,000	14.5	12.0	33,800	25,200	32,000	8.5	20,000	1,045	7995347
	CHPF4860D6D*+TXV	A*VC961205DNA*	35,000	26,000	14.5	12.0	33,800	25,200	32,000	8.5	20,000	1,050	7995348
	CHPF4860D6D*+TXV	G*E80805D*A*	35,600	26,400	14.5	12.0	34,200	25,800	32,800	8.5	20,000	1,275	7995349
	CHPF4860D6D*+TXV	G*EC961205DNA*	35,000	26,000	14.5	12.0	33,800	25,200	32,000	8.5	20,000	1,045	7995350
	CHPF4860D6D*+TXV	G*VC961205DNA*	35,000	26,000	14.5	12.0	33,800	25,200	32,000	8.5	20,000	1,050	7995351
	CHPF4860D6D*+TXV	A*EH800805D*A*	35,600	26,400	14.5	12.0	34,200	25,800	32,800	8.5	20,000	1,275	7999170
	CSCF4860N6D*	G*VC80805D*B*	35,000	26,000	14.0	11.5	33,800	25,400	32,000	8.5	20,000	1,100	9924245
	CSCF4860N6D*	A*EC961004CNA*	35,600	26,400	14.0	11.5	34,200	25,800	32,800	8.5	20,000	1,230	7995382
	CSCF4860N6D*	A*EC961205DNA*	35,000	26,000	14.0	11.5	33,800	25,200	32,000	8.5	20,000	1,045	7995383
	CSCF4860N6D*	A*EH800805C*A*	35,000	26,000	14.0	11.5	33,800	25,200	32,000	8.5	20,000	1,030	7995384
	CSCF4860N6D*	A*EH801005C*A*	35,000	26,000	14.0	11.5	33,800	25,200	32,800	8.5	20,000	1,030	7995385
	CSCF4860N6D*	A*VC80805C*B*	35,000	26,000	14.0	11.5	33,800	25,200	32,000	8.5	20,000	1,070	7995386
	CSCF4860N6D*	A*VC81005C*B*	35,000	26,000	14.0	11.5	33,800	25,200	32,000	8.5	20,000	1,070	7995387
	CSCF4860N6D*	A*VC960804CNA*	35,000	26,000	14.0	11.5	33,800	25,200	32,000	8.5	20,000	1,080	7995388
	CSCF4860N6D*	A*VC961005CNA*	35,000	26,000	14.0	11.5	33,800	25,200	32,000	8.5	20,000	1,100	7995389
	CSCF4860N6D*	A*VC961205DNA*	35,000	26,000	14.0	11.5	33,800	25,200	32,000	8.5	20,000	1,050	7995390
	CSCF4860N6D*	G*E80805C*B*	35,000	26,000	14.0	11.5	33,800	25,200	32,000	8.5	20,000	1,030	7995391
	CSCF4860N6D*	G*E80805D*A*	35,600	26,400	14.0	11.5	34,200	25,800	32,800	8.5	20,000	1,275	7995392
	CSCF4860N6D*	G*E81005C*B*	35,000	26,000	14.0	11.5	33,800	25,200	32,800	8.5	20,000	1,030	7995393
	CSCF4860N6D*	G*EC961004CNA*	35,600	26,400	14.0	11.5	34,200	25,800	32,800	8.5	20,000	1,230	7995394
	CSCF4860N6D*	G*EC961205DNA*	35,000	26,000	14.0	11.5	33,800	25,200	32,000	8.5	20,000	1,045	7995395
	CSCF4860N6D*	G*VC80805C*B*	35,000	26,000	14.0	11.5	33,800	25,200	32,000	8.5	20,000	1,070	7995396
	CSCF4860N6D*	G*VC81005C*B*	35,000	26,000	14.0	11.5	33,800	25,200	32,000	8.5	20,000	1,070	7995397
	CSCF4860N6D*	G*VC960804CNA*	35,000	26,000	14.0	11.5	33,800	25,200	32,000	8.5	20,000	1,080	7995398
	CSCF4860N6D*	G*VC961005CNA*	35,000	26,000	14.0	11.5	33,800	25,200	32,000	8.5	20,000	1,100	7995399
	CSCF4860N6D*	G*VC961205DNA*	35,000	26,000	14.0	11.5	33,800	25,200	32,000	8.5	20,000	1,050	7995400
	CSCF4860N6D*	A*EH800805D*A*	35,600	26,400	14.0	11.5	34,200	25,800	32,800	8.5	20,000	1,275	7999175
	CSCF4860N6D*+EEP+TXV		34,600	25,600	14.0	11.5	33,400	25,000	33,000	8.2	20,000	1,080	7995027
	CSCF4860N6D*+MBVC1200**-1A*		35,000	26,000	14.0	11.5	33,800	25,200	32,000	8.5	20,000	1,050	7995357
	CSCF4860N6D*+MBVC1200**-1A*+TXV		35,000	26,000	14.5	12.0	33,800	25,200	32,000	8.5	20,000	1,050	7995358
	CSCF4860N6D*+MBVC1600**-1A*		35,400	26,200	14.5	12.0	34,000	25,600	32,400	8.5	20,000	1,075	7995359
	CSCF4860N6D*+MBVC1600**-1A*+TXV		35,400	26,200	15.0	12.5	34,000	25,600	32,400	8.5	20,000	1,075	7995360
	CSCF4860N6D*+MBVC2000**-1A*		36,000	26,600	14.5	12.0	34,600	26,000	32,600	8.5	20,000	1,275	7995361
	CSCF4860N6D*+MBVC2000**-1A*+TXV		36,000	26,600	15.0	12.5	34,600	26,000	32,600	8.5	20,000	1,275	7995362
	CSCF4860N6D*+TXV	G*VC80805D*B*	35,000	26,000	14.5	12.0	33,800	25,400	32,000	8.5	20,000	1,100	9924246
	CSCF4860N6D*+TXV	A*EC961004CNA*	35,600	26,400	14.5	12.0	34,200	25,800	32,800	8.5	20,000	1,230	7995363
	CSCF4860N6D*+TXV	A*EC961205DNA*	35,000	26,000	14.5	12.0	33,800	25,200	32,000	8.5	20,000	1,045	7995364
	CSCF4860N6D*+TXV	A*EH800805C*A*	35,000	26,000	14.5	12.0	33,800	25,200	32,000	8.5	20,000	1,030	7995365
	CSCF4860N6D*+TXV	A*EH801005C*A*	35,000	26,000	14.5	12.0	33,800	25,200	32,800	8.5	20,000	1,030	7995366
	CSCF4860N6D*+TXV	A*VC80805C*B*	35,000	26,000	14.5	12.0	33,800	25,200	32,000	8.5	20,000	1,070	7995367
	CSCF4860N6D*+TXV	A*VC81005C*B*	35,000	26,000	14.5	12.0	33,800	25,200	32,000	8.5	20,000	1,070	7995368
	CSCF4860N6D*+TXV	A*VC960804CNA*	35,000	26,000	14.5	12.0	33,800	25,200	32,000	8.5	20,000	1,080	7995369
	CSCF4860N6D*+TXV	A*VC961005CNA*	35,000	26,000	14.5	12.0	33,800	25,200	32,000	8.5	20,000	1,100	7995370
	CSCF4860N6D*+TXV	A*VC961205DNA*	35,000	26,000	14.5	12.0	33,800	25,200	32,000	8.5	20,000	1,050	7995371
	CSCF4860N6D*+TXV	G*E80805C*B*	35,000	26,000	14.5	12.0	33,800	25,200	32,000	8.5	20,000	1,030	7995372
	CSCF4860N6D*+TXV	G*E80805D*A*	35,600	26,400	14.5	12.0	34,200	25,800	32,800	8.5	20,000	1,275	7995373
	CSCF4860N6D*+TXV	G*E81005C*B*	35,000	26,000	14.5	12.0	33,800	25,200	32,800	8.5	20,000	1,030	7995374
	CSCF4860N6D*+TXV	G*EC961004CNA*	35,600	26,400	14.5	12.0	34,200	25,800	32,800	8.5	20,000	1,230	7995375
	CSCF4860N6D*+TXV	G*EC961205DNA*	35,000	26,000	14.5	12.0	33,800	25,200	32,000	8.5	20,000	1,045	7995376
	CSCF4860N6D*+TXV	G*VC80805C*B*	35,000	26,000	14.5	12.0	33,800	25,200	32,000	8.5	20,000	1,070	7995377
	CSCF4860N6D*+TXV	G*VC81005C*B*	35,000	26,000	14.5	12.0	33,800	25,200	32,000	8.5	20,000	1,070	7995378
	CSCF4860N6D*+TXV	G*VC960804CNA*	35,000	26,000	14.5	12.0	33,800	25,200	32,000	8.5	20,000	1,080	7995379
	CSCF4860N6D*+TXV	G*VC961005CNA*	35,000	26,000	14.5	12.0	33,800	25,200	32,000	8.5	20,000	1,100	7995380
	CSCF4860N6D*+TXV	G*VC961205DNA*	35,000	26,000	14.5	12.0	33,800	25,200	32,000	8.5	20,000	1,050	7995381
	CSCF4860N6D*+TXV	A*EH800805D*A*	35,600	26,400	14.5	12.0	34,200	25,800	32,800	8.5	20,000	1,275	7999173

See Notes on Page 50.

Outdoor Unit	Indoor Units		Cooling Ratings ^				TVA Ratings [3]		Heating Ratings ^			CFM	AHRI #
	Coils/Air Handlers	Furnaces	Total	Sens.	SEER [1]	EER [2]	Total	Sens.	Hi [4]	HSPF [5]	Low [6]		
GSZ14 0371A*	ARUF37C14A*+TXV		33,000	24,000	14.5	12.0	31,800	23,800	34,000	8.2	22,000	985	9085982
	ASPT36C14A*		33,000	24,000	14.5	12.2	31,800	23,800	34,000	8.5	22,000	1,050	9085983
	ASPT37C14A*		34,200	24,800	15.0	12.5	33,000	24,800	35,000	8.5	23,000	1,060	9085984
	ASPT39C14A*		33,000	24,000	14.5	12.2	31,800	23,800	32,000	8.2	22,000	1,220	10207401
	ASPT42D14A*		34,200	24,800	15.0	12.5	33,000	24,800	35,000	8.5	23,000	1,195	9085985
	AVPTC39C14A*		33,000	24,000	14.5	12.2	31,800	23,800	32,000	8.2	22,000	1,220	10207413
	AWUF37XX16B*+TXV		32,400	23,600	14.0	11.5	31,200	23,400	33,400	8.2	22,000	1,100	9085986
GSZ14 0421K*	ARUF43C14A*+TXV		39,000	29,600	14.0	11.5	37,600	29,000	40,000	8.2	24,000	1,300	7995401
	ARUF43D14A*+TXV		39,000	29,600	14.0	11.5	37,600	29,000	40,000	8.2	24,000	1,260	8718589
	ARUF47D14A*		39,000	29,600	14.0	11.5	37,600	29,000	39,000	8.2	24,000	1,325	7995402
	ASPT47C14A*		39,500	30,000	14.0	12.0	38,000	29,400	39,000	8.2	23,000	1,320	8242631
	ASPT47D14A*		38,500	29,200	15.0	12.5	37,200	28,600	38,000	8.5	23,000	1,205	8242633
	ASPT49C14A*		38,000	28,200	14.0	12.0	36,600	28,000	38,000	8.2	22,600	1,200	10207402
	ASPT49D14A*		40,000	30,400	15.0	12.5	38,500	29,600	39,000	8.5	23,000	1,320	8242634
	ASPT59C14A*		39,500	30,000	14.0	12.0	38,000	29,400	39,000	8.2	23,000	1,255	8242637
	AVPTC42D14A*		39,500	30,000	15.0	12.5	38,000	29,400	39,000	8.5	23,000	1,220	7995403
	AVPTC49C14A*		38,000	28,200	14.0	12.0	36,600	28,000	38,000	8.2	22,600	1,200	10207414
	AVPTC49D14A*		40,000	30,400	15.0	12.5	38,500	29,600	39,000	9.0	23,000	1,320	8996190
	AVPTC59C14A*		39,500	30,000	14.0	12.0	38,000	29,400	39,000	8.2	23,000	1,290	8996188
	AVPTC59D14A*		39,500	30,000	14.5	12.2	38,000	29,400	39,000	8.2	23,000	1,365	8996189
	CA*F4860*6D*	G*VC80805D*B*	39,500	30,800	14.0	11.5	38,000	30,000	39,000	8.5	23,600	1,400	9924247
	CA*F4860*6D*	A*EC961004CNA*	39,500	30,000	14.0	11.5	38,000	29,400	39,000	8.5	23,600	1,230	7995428
	CA*F4860*6D*	A*EC961205DNA*	39,500	30,000	14.0	11.5	38,000	29,400	39,500	8.5	23,600	1,300	7995429
	CA*F4860*6D*	A*EH800805C*A*	39,500	30,000	14.0	11.5	38,000	29,400	39,500	8.5	23,600	1,325	7995430
	CA*F4860*6D*	A*EH801005C*A*	39,500	30,000	14.0	11.5	38,000	29,400	39,000	8.5	23,600	1,225	7995431
	CA*F4860*6D*	A*VC80805C*B*	39,500	30,000	14.0	11.5	38,000	29,400	39,000	8.5	23,600	1,240	7995432
	CA*F4860*6D*	A*VC81005C*B*	39,500	30,000	14.0	11.5	38,000	29,400	39,000	8.5	23,600	1,250	7995433
	CA*F4860*6D*	A*VC960804CNA*	39,500	30,000	14.0	11.5	38,000	29,400	39,500	8.5	23,600	1,310	7995434
	CA*F4860*6D*	A*VC961005CNA*	39,500	30,000	14.0	11.5	38,000	29,400	39,500	8.5	23,600	1,300	7995435
	CA*F4860*6D*	A*VC961205DNA*	39,500	30,000	14.0	11.5	38,000	29,400	39,000	8.5	23,600	1,250	7995436
	CA*F4860*6D*	G*E80805C*B*	39,500	30,000	14.0	11.5	38,000	29,400	39,500	8.5	23,600	1,325	7995437
	CA*F4860*6D*	G*E80805D*A*	39,500	30,000	14.0	11.5	38,000	29,400	39,500	8.5	23,600	1,280	7995438
	CA*F4860*6D*	G*E81005C*B*	39,500	30,000	14.0	11.5	38,000	29,400	39,000	8.5	23,600	1,225	7995439
	CA*F4860*6D*	G*EC961004CNA*	39,500	30,000	14.0	11.5	38,000	29,400	39,000	8.5	23,600	1,230	7995440
	CA*F4860*6D*	G*EC961205DNA*	39,500	30,000	14.0	11.5	38,000	29,400	39,500	8.5	23,600	1,300	7995441
	CA*F4860*6D*	G*VC80805C*B*	39,500	30,000	14.0	11.5	38,000	29,400	39,000	8.5	23,600	1,240	7995442
	CA*F4860*6D*	G*VC81005C*B*	39,500	30,000	14.0	11.5	38,000	29,400	39,000	8.5	23,600	1,250	7995443
	CA*F4860*6D*	G*VC960804CNA*	39,500	30,000	14.0	11.5	38,000	29,400	39,500	8.5	23,600	1,310	7995444
	CA*F4860*6D*	G*VC961005CNA*	39,500	30,000	14.0	11.5	38,000	29,400	39,500	8.5	23,600	1,300	7995445
	CA*F4860*6D*	G*VC961205DNA*	39,500	30,000	14.0	11.5	38,000	29,400	39,000	8.5	23,600	1,250	7995446
	CA*F4860*6D*	A*EH800805D*A*	39,500	30,000	14.0	11.5	38,000	29,400	39,500	8.5	23,600	1,280	7999178
	CA*F4860*6D*+EEP+TXV		39,500	30,000	14.0	11.5	38,000	29,400	39,500	8.2	24,000	1,300	7995404
	CA*F4860*6D*+MBVC1600**-1A*		40,000	30,400	14.5	12.0	38,500	29,600	39,000	8.5	23,600	1,300	7995405
	CA*F4860*6D*+MBVC1600**-1A*+TXV		40,000	30,400	15.0	12.5	38,500	29,600	39,000	8.5	23,600	1,300	7995406
	CA*F4860*6D*+MBVC2000**-1A*		40,500	30,800	14.5	12.0	39,000	30,000	39,000	9.0	23,600	1,310	7995407
	CA*F4860*6D*+MBVC2000**-1A*+TXV		40,500	30,800	15.0	12.5	39,000	30,000	39,000	9.0	23,600	1,310	7995408
	CA*F4860*6D*+TXV	G*VC80805D*B*	39,500	30,800	14.5	12.0	38,000	30,000	39,000	8.5	23,600	1,400	9924248
	CA*F4860*6D*+TXV	A*EC961004CNA*	39,500	30,000	14.5	12.0	38,000	29,400	39,000	8.5	23,600	1,230	7995409
	CA*F4860*6D*+TXV	A*EC961205DNA*	39,500	30,000	14.5	12.0	38,000	29,400	39,500	8.5	23,600	1,300	7995410
	CA*F4860*6D*+TXV	A*EH800805C*A*	39,500	30,000	14.5	12.0	38,000	29,400	39,500	8.5	23,600	1,325	7995411
	CA*F4860*6D*+TXV	A*EH801005C*A*	39,500	30,000	14.5	12.0	38,000	29,400	39,000	8.5	23,600	1,225	7995412
	CA*F4860*6D*+TXV	A*VC80805C*B*	39,500	30,000	14.5	12.0	38,000	29,400	39,000	8.5	23,600	1,240	7995413
	CA*F4860*6D*+TXV	A*VC81005C*B*	39,500	30,000	14.5	12.0	38,000	29,400	39,000	8.5	23,600	1,250	7995414
	CA*F4860*6D*+TXV	A*VC960804CNA*	39,500	30,000	14.5	12.0	38,000	29,400	39,500	8.5	23,600	1,310	7995415
	CA*F4860*6D*+TXV	A*VC961005CNA*	39,500	30,000	14.5	12.0	38,000	29,400	39,500	8.5	23,600	1,300	7995416
	CA*F4860*6D*+TXV	A*VC961205DNA*	39,500	30,000	14.5	12.0	38,000	29,400	39,000	8.5	23,600	1,250	7995417
	CA*F4860*6D*+TXV	G*E80805C*B*	39,500	30,000	14.5	12.0	38,000	29,400	39,500	8.5	23,600	1,325	7995418

See Notes on Page 50.

Outdoor Unit	Indoor Units		Cooling Ratings ^				TVA Ratings [3]		Heating Ratings ^			CFM	AHRI #
	Coils/Air Handlers	Furnaces	Total	Sens.	SEER [1]	EER [2]	Total	Sens.	Hi [4]	HSPF [5]	Low [6]		
GSZ14 0421K* (Contd.)	CA*F4860*6D*+TXV	G*E80805D*A*	39,500	30,000	14.5	12.0	38,000	29,400	39,500	8.5	23,600	1,280	7995419
	CA*F4860*6D*+TXV	G*E81005C*B*	39,500	30,000	14.5	12.0	38,000	29,400	39,000	8.5	23,600	1,225	7995420
	CA*F4860*6D*+TXV	G*EC961004CNA*	39,500	30,000	14.5	12.0	38,000	29,400	39,000	8.5	23,600	1,230	7995421
	CA*F4860*6D*+TXV	G*EC961205DNA*	39,500	30,000	14.5	12.0	38,000	29,400	39,500	8.5	23,600	1,300	7995422
	CA*F4860*6D*+TXV	G*VC80805C*B*	39,500	30,000	14.5	12.0	38,000	29,400	39,000	8.5	23,600	1,240	7995423
	CA*F4860*6D*+TXV	G*VC81005C*B*	39,500	30,000	14.5	12.0	38,000	29,400	39,000	8.5	23,600	1,250	7995424
	CA*F4860*6D*+TXV	G*VC960804CNA*	39,500	30,000	14.5	12.0	38,000	29,400	39,500	8.5	23,600	1,310	7995425
	CA*F4860*6D*+TXV	G*VC961005CNA*	39,500	30,000	14.5	12.0	38,000	29,400	39,500	8.5	23,600	1,300	7995426
	CA*F4860*6D*+TXV	G*VC961205DNA*	39,500	30,000	14.5	12.0	38,000	29,400	39,000	8.5	23,600	1,250	7995427
	CA*F4860*6D*+TXV	A*EH800805D*A*	39,500	30,000	14.5	12.0	38,000	29,400	39,500	8.5	23,600	1,280	7999176
	CA*F4961*6D*	G*VC80805D*B*	40,000	31,000	14.5	12.0	38,500	30,400	39,500	8.5	23,800	1,400	9924249
	CA*F4961*6D*	A*EC961004CNA*	40,000	30,400	14.5	12.0	38,500	29,600	39,500	8.5	23,800	1,230	7995471
	CA*F4961*6D*	A*EC961205DNA*	40,000	30,400	14.5	12.0	38,500	29,600	40,000	8.5	24,000	1,300	7995472
	CA*F4961*6D*	A*EH800805C*A*	40,000	30,400	14.5	12.0	38,500	29,600	39,500	8.5	23,800	1,325	7995473
	CA*F4961*6D*	A*EH801005C*A*	40,000	30,400	14.5	12.0	38,500	29,600	39,500	8.5	23,800	1,225	7995474
	CA*F4961*6D*	A*VC80805C*B*	40,000	30,400	14.5	12.0	38,500	29,600	39,500	8.5	23,800	1,240	7995475
	CA*F4961*6D*	A*VC81005C*B*	40,000	30,400	14.5	12.0	38,500	29,600	39,500	8.5	23,800	1,250	7995476
	CA*F4961*6D*	A*VC960804CNA*	40,000	30,400	14.5	12.0	38,500	29,600	39,500	8.5	23,800	1,310	7995477
	CA*F4961*6D*	A*VC961005CNA*	40,000	30,400	14.5	12.0	38,500	29,600	39,500	8.5	23,800	1,300	7995478
	CA*F4961*6D*	A*VC961205DNA*	40,000	30,400	14.5	12.0	38,500	29,600	39,500	8.5	23,800	1,250	7995479
	CA*F4961*6D*	G*E80805C*B*	40,000	30,400	14.5	12.0	38,500	29,600	39,500	8.5	23,800	1,325	7995480
	CA*F4961*6D*	G*E80805D*A*	40,000	30,400	14.5	12.0	38,500	29,600	39,500	8.5	23,800	1,280	7995481
	CA*F4961*6D*	G*E81005C*B*	40,000	30,400	14.5	12.0	38,500	29,600	39,500	8.5	23,800	1,225	7995482
	CA*F4961*6D*	G*EC961004CNA*	40,000	30,400	14.5	12.0	38,500	29,600	39,500	8.5	23,800	1,230	7995483
	CA*F4961*6D*	G*EC961205DNA*	40,000	30,400	14.5	12.0	38,500	29,600	40,000	8.5	24,000	1,300	7995484
	CA*F4961*6D*	G*VC80805C*B*	40,000	30,400	14.5	12.0	38,500	29,600	39,500	8.5	23,800	1,240	7995485
	CA*F4961*6D*	G*VC81005C*B*	40,000	30,400	14.5	12.0	38,500	29,600	39,500	8.5	23,800	1,250	7995486
	CA*F4961*6D*	G*VC960804CNA*	40,000	30,400	14.5	12.0	38,500	29,600	39,500	8.5	23,800	1,310	7995487
	CA*F4961*6D*	G*VC961005CNA*	40,000	30,400	14.5	12.0	38,500	29,600	39,500	8.5	23,800	1,300	7995488
	CA*F4961*6D*	G*VC961205DNA*	40,000	30,400	14.5	12.0	38,500	29,600	39,500	8.5	23,800	1,250	7995489
	CA*F4961*6D*	A*EH800805D*A*	40,000	30,400	14.5	12.0	38,500	29,600	39,500	8.5	23,800	1,280	7999181
	CA*F4961*6D*+EEP+TXV		40,000	30,400	14.0	12.0	38,500	29,600	40,000	8.5	24,000	1,300	7995447
	CA*F4961*6D*+MBVC1600**-1A*		40,000	30,400	14.5	12.0	38,500	29,600	39,500	9.0	23,800	1,300	7995448
	CA*F4961*6D*+MBVC1600**-1A*+TXV		40,000	30,400	15.0	12.5	38,500	29,600	39,500	9.0	23,800	1,300	7995449
	CA*F4961*6D*+MBVC2000**-1A*		40,500	30,800	14.5	12.0	39,000	30,000	39,000	9.0	23,800	1,310	7995450
	CA*F4961*6D*+MBVC2000**-1A*+TXV		40,500	30,800	15.0	12.5	39,000	30,000	39,000	9.0	23,800	1,310	7995451
	CA*F4961*6D*+TXV	G*VC80805D*B*	40,000	31,000	15.0	12.5	38,500	30,400	39,500	8.5	23,800	1,400	9924250
	CA*F4961*6D*+TXV	A*EC961004CNA*	40,000	30,400	15.0	12.5	38,500	29,600	39,500	8.5	23,800	1,230	7995452
	CA*F4961*6D*+TXV	A*EC961205DNA*	40,000	30,400	15.0	12.5	38,500	29,600	40,000	8.5	24,000	1,300	7995453
	CA*F4961*6D*+TXV	A*EH800805C*A*	40,000	30,400	15.0	12.5	38,500	29,600	39,500	8.5	23,800	1,325	7995454
	CA*F4961*6D*+TXV	A*EH801005C*A*	40,000	30,400	15.0	12.5	38,500	29,600	39,500	8.5	23,800	1,225	7995455
	CA*F4961*6D*+TXV	A*VC80805C*B*	40,000	30,400	15.0	12.5	38,500	29,600	39,500	8.5	23,800	1,240	7995456
	CA*F4961*6D*+TXV	A*VC81005C*B*	40,000	30,400	15.0	12.5	38,500	29,600	39,500	8.5	23,800	1,250	7995457
	CA*F4961*6D*+TXV	A*VC960804CNA*	40,000	30,400	15.0	12.5	38,500	29,600	39,500	8.5	23,800	1,310	7995458
	CA*F4961*6D*+TXV	A*VC961005CNA*	40,000	30,400	15.0	12.5	38,500	29,600	39,500	8.5	23,800	1,300	7995459
	CA*F4961*6D*+TXV	A*VC961205DNA*	40,000	30,400	15.0	12.5	38,500	29,600	39,500	8.5	23,800	1,250	7995460
	CA*F4961*6D*+TXV	G*E80805C*B*	40,000	30,400	15.0	12.5	38,500	29,600	39,500	8.5	23,800	1,325	7995461
	CA*F4961*6D*+TXV	G*E80805D*A*	40,000	30,400	15.0	12.5	38,500	29,600	39,500	8.5	23,800	1,280	7995462
	CA*F4961*6D*+TXV	G*E81005C*B*	40,000	30,400	15.0	12.5	38,500	29,600	39,500	8.5	23,800	1,225	7995463
	CA*F4961*6D*+TXV	G*EC961004CNA*	40,000	30,400	15.0	12.5	38,500	29,600	39,500	8.5	23,800	1,230	7995464
	CA*F4961*6D*+TXV	G*EC961205DNA*	40,000	30,400	15.0	12.5	38,500	29,600	40,000	8.5	24,000	1,300	7995465
	CA*F4961*6D*+TXV	G*VC80805C*B*	40,000	30,400	15.0	12.5	38,500	29,600	39,500	8.5	23,800	1,240	7995466
	CA*F4961*6D*+TXV	G*VC81005C*B*	40,000	30,400	15.0	12.5	38,500	29,600	39,500	8.5	23,800	1,250	7995467
	CA*F4961*6D*+TXV	G*VC960804CNA*	40,000	30,400	15.0	12.5	38,500	29,600	39,500	8.5	23,800	1,310	7995468
	CA*F4961*6D*+TXV	G*VC961005CNA*	40,000	30,400	15.0	12.5	38,500	29,600	39,500	8.5	23,800	1,300	7995469
	CA*F4961*6D*+TXV	G*VC961205DNA*	40,000	30,400	15.0	12.5	38,500	29,600	39,500	8.5	23,800	1,250	7995470
	CA*F4961*6D*+TXV	A*EH800805D*A*	40,000	30,400	15.0	12.5	38,500	29,600	39,500	8.5	23,800	1,280	7999180

See Notes on Page 50.

Outdoor Unit	Indoor Units		Cooling Ratings ^				TVA Ratings [3]		Heating Ratings ^			CFM	AHRI #
	Coils/Air Handlers	Furnaces	Total	Sens.	SEER [1]	EER [2]	Total	Sens.	Hi [4]	HSPF [5]	Low [6]		
GSZ14 0421K* (Contd.)	CHPF4860D6D*	A*EC961205DNA*	40,000	30,400	14.0	12.0	38,500	29,600	39,500	8.5	23,600	1,300	7995500
	CHPF4860D6D*	A*VC961205DNA*	39,500	30,000	14.0	12.0	38,000	29,400	39,000	8.5	23,600	1,250	7995501
	CHPF4860D6D*	G*E80805D*A*	39,500	30,000	14.0	12.0	38,000	29,400	39,500	8.5	23,600	1,280	7995502
	CHPF4860D6D*	G*EC961205DNA*	40,000	30,400	14.0	12.0	38,500	29,600	39,500	8.5	23,600	1,300	7995503
	CHPF4860D6D*	G*VC961205DNA*	39,500	30,000	14.0	12.0	38,000	29,400	39,000	8.5	23,600	1,250	7995504
	CHPF4860D6D*	A*EH800805D*A*	39,500	30,000	14.0	12.0	38,000	29,400	39,500	8.5	23,600	1,280	7999184
	CHPF4860D6D*+EEP+TXV		39,000	29,600	14.0	11.5	37,600	29,000	39,500	8.5	24,000	1,300	7995490
	CHPF4860D6D*+MBVC1600**-1A*		40,000	30,400	14.5	12.0	38,500	29,600	39,000	8.5	23,600	1,300	7995491
	CHPF4860D6D*+MBVC1600**-1A*+TXV		40,000	30,400	15.0	12.5	38,500	29,600	39,000	8.5	23,600	1,300	7995492
	CHPF4860D6D*+MBVC2000**-1A*		40,000	30,400	14.5	12.0	38,500	29,600	39,000	9.0	23,600	1,310	7995493
	CHPF4860D6D*+MBVC2000**-1A*+TXV		40,000	30,400	15.0	12.5	38,500	29,600	39,000	9.0	23,600	1,310	7995494
	CHPF4860D6D*+TXV	A*EC961205DNA*	40,000	30,400	14.5	12.0	38,500	29,600	39,500	8.5	23,600	1,300	7995495
	CHPF4860D6D*+TXV	A*VC961205DNA*	39,500	30,000	14.5	12.0	38,000	29,400	39,000	8.5	23,600	1,250	7995496
	CHPF4860D6D*+TXV	G*E80805D*A*	39,500	30,000	14.5	12.0	38,000	29,400	39,500	8.5	23,600	1,280	7995497
	CHPF4860D6D*+TXV	G*EC961205DNA*	40,000	30,400	14.5	12.0	38,500	29,600	39,500	8.5	23,600	1,300	7995498
	CHPF4860D6D*+TXV	G*VC961205DNA*	39,500	30,000	14.5	12.0	38,000	29,400	39,000	8.5	23,600	1,250	7995499
	CHPF4860D6D*+TXV	A*EH800805D*A*	39,500	30,000	14.5	12.0	38,000	29,400	39,500	8.5	23,600	1,280	7999183
	CSCF4860N6D*	G*VC80805D*B*	40,000	31,000	14.5	12.0	38,500	30,400	39,500	8.5	23,600	1,400	9924251
	CSCF4860N6D*	A*EC961004CNA*	40,500	30,800	14.0	12.0	39,000	30,000	39,000	8.5	23,600	1,230	7995529
	CSCF4860N6D*	A*EC961205DNA*	40,000	30,400	14.0	12.0	38,500	29,600	40,000	8.5	23,600	1,300	7995530
	CSCF4860N6D*	A*EH800805C*A*	40,500	30,800	14.0	12.0	39,000	30,000	39,500	8.5	23,600	1,325	7995531
	CSCF4860N6D*	A*EH801005C*A*	40,500	30,800	14.0	12.0	39,000	30,000	39,000	8.5	23,600	1,225	7995532
	CSCF4860N6D*	A*VC80805C*B*	40,000	30,400	14.5	12.0	38,500	29,600	39,500	8.5	23,600	1,240	7995533
	CSCF4860N6D*	A*VC81005C*B*	40,000	30,400	14.5	12.0	38,500	29,600	39,500	8.5	23,600	1,250	7995534
	CSCF4860N6D*	A*VC960804CNA*	40,000	30,400	14.5	12.0	38,500	29,600	39,500	8.5	23,600	1,310	7995535
	CSCF4860N6D*	A*VC961005CNA*	40,000	30,400	14.5	12.0	38,500	29,600	39,500	8.5	23,600	1,300	7995536
	CSCF4860N6D*	A*VC961205DNA*	40,000	30,400	14.5	12.0	38,500	29,600	39,500	8.5	23,600	1,250	7995537
	CSCF4860N6D*	G*E80805C*B*	40,500	30,800	14.0	12.0	39,000	30,000	39,500	8.5	23,600	1,325	7995538
	CSCF4860N6D*	G*E80805D*A*	40,500	30,800	14.0	12.0	39,000	30,000	39,500	8.5	23,600	1,280	7995539
	CSCF4860N6D*	G*E81005C*B*	40,500	30,800	14.0	12.0	39,000	30,000	39,000	8.5	23,600	1,225	7995540
	CSCF4860N6D*	G*EC961004CNA*	40,500	30,800	14.0	12.0	39,000	30,000	39,000	8.5	23,600	1,230	7995541
	CSCF4860N6D*	G*EC961205DNA*	40,000	30,400	14.0	12.0	38,500	29,600	40,000	8.5	23,600	1,300	7995542
	CSCF4860N6D*	G*VC80805C*B*	40,000	30,400	14.5	12.0	38,500	29,600	39,500	8.5	23,600	1,240	7995543
	CSCF4860N6D*	G*VC81005C*B*	40,000	30,400	14.5	12.0	38,500	29,600	39,500	8.5	23,600	1,250	7995544
	CSCF4860N6D*	G*VC960804CNA*	40,000	30,400	14.5	12.0	38,500	29,600	39,500	8.5	23,600	1,310	7995545
	CSCF4860N6D*	G*VC961005CNA*	40,000	30,400	14.5	12.0	38,500	29,600	39,500	8.5	23,600	1,300	7995546
	CSCF4860N6D*	G*VC961205DNA*	40,000	30,400	14.5	12.0	38,500	29,600	39,500	8.5	23,600	1,250	7995547
	CSCF4860N6D*	A*EH800805D*A*	40,500	30,800	14.0	12.0	39,000	30,000	39,500	8.5	23,600	1,280	7999188
	CSCF4860N6D*+EEP+TXV		40,500	30,800	14.0	12.0	39,000	30,000	40,000	8.5	24,000	1,300	7995505
	CSCF4860N6D*+MBVC1600**-1A*		40,000	30,400	14.5	12.0	38,500	29,600	39,500	8.5	23,600	1,300	7995506
	CSCF4860N6D*+MBVC1600**-1A*+TXV		40,000	30,400	15.0	12.5	38,500	29,600	39,500	8.5	23,600	1,300	7995507
	CSCF4860N6D*+MBVC2000**-1A*		40,000	30,400	14.5	12.5	38,500	29,600	39,500	9.0	23,600	1,310	7995508
	CSCF4860N6D*+MBVC2000**-1A*+TXV		40,000	30,400	15.0	13.0	38,500	29,600	39,000	9.0	23,600	1,310	7995509
	CSCF4860N6D*+TXV	G*VC80805D*B*	40,000	31,000	15.0	12.0	38,500	30,400	39,500	8.5	23,600	1,400	9924252
	CSCF4860N6D*+TXV	A*EC961004CNA*	40,500	30,800	14.5	12.0	39,000	30,000	39,000	8.5	23,600	1,230	7995510
	CSCF4860N6D*+TXV	A*EC961205DNA*	40,000	30,400	14.5	12.0	38,500	29,600	40,000	8.5	23,600	1,300	7995511
	CSCF4860N6D*+TXV	A*EH800805C*A*	40,500	30,800	14.5	12.0	39,000	30,000	39,500	8.5	23,600	1,325	7995512
	CSCF4860N6D*+TXV	A*EH801005C*A*	40,500	30,800	14.5	12.0	39,000	30,000	39,000	8.5	23,600	1,225	7995513
	CSCF4860N6D*+TXV	A*VC80805C*B*	40,000	30,400	15.0	12.0	38,500	29,600	39,500	8.5	23,600	1,240	7995514
	CSCF4860N6D*+TXV	A*VC81005C*B*	40,000	30,400	15.0	12.0	38,500	29,600	39,500	8.5	23,600	1,250	7995515
	CSCF4860N6D*+TXV	A*VC960804CNA*	40,000	30,400	15.0	12.0	38,500	29,600	39,500	8.5	23,600	1,310	7995516
	CSCF4860N6D*+TXV	A*VC961005CNA*	40,000	30,400	15.0	12.0	38,500	29,600	39,500	8.5	23,600	1,300	7995517
	CSCF4860N6D*+TXV	A*VC961205DNA*	40,000	30,400	15.0	12.0	38,500	29,600	39,500	8.5	23,600	1,250	7995518
	CSCF4860N6D*+TXV	G*E80805C*B*	40,500	30,800	14.5	12.0	39,000	30,000	39,500	8.5	23,600	1,325	7995519
	CSCF4860N6D*+TXV	G*E80805D*A*	40,500	30,800	14.5	12.0	39,000	30,000	39,500	8.5	23,600	1,280	7995520
	CSCF4860N6D*+TXV	G*E81005C*B*	40,500	30,800	14.5	12.0	39,000	30,000	39,000	8.5	23,600	1,225	7995521
	CSCF4860N6D*+TXV	G*EC961004CNA*	40,500	30,800	14.5	12.0	39,000	30,000	39,000	8.5	23,600	1,230	7995522
	CSCF4860N6D*+TXV	G*EC961205DNA*	40,000	30,400	14.5	12.0	38,500	29,600	40,000	8.5	23,600	1,300	7995523

See Notes on Page 50.

Outdoor Unit	Indoor Units		Cooling Ratings ^				TVA Ratings [3]		Heating Ratings ^			CFM	AHRI #
	Coils/Air Handlers	Furnaces	Total	Sens.	SEER [1]	EER [2]	Total	Sens.	Hi [4]	HSPF [5]	Low [6]		
GSZ14 0421K* (Contd.)	CSCF4860N6D*+TXV	G*VC80805C*B*	40,000	30,400	15.0	12.0	38,500	29,600	39,500	8.5	23,600	1,240	7995524
	CSCF4860N6D*+TXV	G*VC81005C*B*	40,000	30,400	15.0	12.0	38,500	29,600	39,500	8.5	23,600	1,250	7995525
	CSCF4860N6D*+TXV	G*VC960804CNA*	40,000	30,400	15.0	12.0	38,500	29,600	39,500	8.5	23,600	1,310	7995526
	CSCF4860N6D*+TXV	G*VC961005CNA*	40,000	30,400	15.0	12.0	38,500	29,600	39,500	8.5	23,600	1,300	7995527
	CSCF4860N6D*+TXV	G*VC961205DNA*	40,000	30,400	15.0	12.0	38,500	29,600	39,500	8.5	23,600	1,250	7995528
	CSCF4860N6D*+TXV	A*EH800805D*A*	40,500	30,800	14.5	12.0	39,000	30,000	39,500	8.5	23,600	1,280	7999186
GSZ14 0481K*	ARUF49D14A*+TXV		44,000	34,800	14.0	11.5	42,500	34,000	44,000	8.5	27,600	1,450	9006625
	ARUF61D14A*+TXV		45,000	35,600	14.0	11.5	43,500	34,800	44,500	8.5	28,000	1,555	7995548
	ASPT49D14A*		44,500	35,200	14.5	12.0	43,000	34,400	44,000	8.5	27,600	1,430	8242639
	ASPT59C14A*		45,000	35,600	14.0	12.0	43,500	34,800	44,500	8.2	27,600	1,430	8242640
	ASPT61D14A*		45,000	35,600	14.5	12.0	43,500	34,800	44,500	8.5	27,600	1,555	8242642
	AVPTC48D14A*		45,000	35,600	14.5	12.0	43,500	34,800	44,500	9.0	27,600	1,550	7995029
	AVPTC59C14A*		45,000	35,600	14.0	12.0	43,500	34,800	44,500	8.5	27,600	1,485	8996191
	AVPTC59D14A*		45,000	35,600	14.5	12.2	43,500	34,800	44,500	8.2	27,400	1,580	8996192
	AVPTC61D14A*		45,500	36,000	15.0	12.5	44,000	35,000	44,500	9.0	27,200	1,455	8996193
	CA*F4961*6D*	A*EC961205DNA*	45,500	36,000	14.0	11.5	44,000	35,000	44,500	9.0	27,600	1,520	7995559
	CA*F4961*6D*	A*VC961205DNA*	45,500	36,000	14.0	11.5	44,000	35,000	44,500	9.0	27,600	1,530	7995560
	CA*F4961*6D*	G*E80805D*A*	45,500	36,000	14.0	11.5	44,000	35,000	44,500	9.0	27,600	1,500	7995561
	CA*F4961*6D*	G*EC961205DNA*	45,500	36,000	14.0	11.5	44,000	35,000	44,500	9.0	27,600	1,520	7995562
	CA*F4961*6D*	G*VC961205DNA*	45,500	36,000	14.0	11.5	44,000	35,000	44,500	9.0	27,600	1,530	7995563
	CA*F4961*6D*	A*EH800805D*A*	45,500	36,000	14.0	11.5	44,000	35,000	44,500	9.0	27,600	1,500	7999191
	CA*F4961*6D*+EEP+TXV		45,000	35,600	14.0	11.5	43,500	34,800	45,000	9.0	27,600	1,555	7995549
	CA*F4961*6D*+MBVC1600**-1A*		45,500	36,000	14.5	12.0	44,000	35,000	44,500	9.0	27,600	1,500	7995550
	CA*F4961*6D*+MBVC1600**-1A*+TXV		45,500	36,000	15.0	12.5	44,000	35,000	44,500	9.0	27,600	1,500	7995551
	CA*F4961*6D*+MBVC2000**-1A*		46,000	36,400	14.5	12.0	44,500	35,400	44,500	9.0	27,600	1,570	7995552
	CA*F4961*6D*+MBVC2000**-1A*+TXV		46,000	36,400	15.0	12.5	44,500	35,400	44,500	9.0	27,600	1,570	7995553
	CA*F4961*6D*+TXV	A*EC961205DNA*	45,500	36,000	14.5	12.0	44,000	35,000	44,500	9.0	27,600	1,520	7995554
	CA*F4961*6D*+TXV	A*VC961205DNA*	45,500	36,000	14.5	12.0	44,000	35,000	44,500	9.0	27,600	1,530	7995555
	CA*F4961*6D*+TXV	G*E80805D*A*	45,500	36,000	14.5	12.0	44,000	35,000	44,500	9.0	27,600	1,500	7995556
	CA*F4961*6D*+TXV	G*EC961205DNA*	45,500	36,000	14.5	12.0	44,000	35,000	44,500	9.0	27,600	1,520	7995557
	CA*F4961*6D*+TXV	G*VC961205DNA*	45,500	36,000	14.5	12.0	44,000	35,000	44,500	9.0	27,600	1,530	7995558
	CA*F4961*6D*+TXV	A*EH800805D*A*	45,500	36,000	14.5	12.0	44,000	35,000	44,500	9.0	27,600	1,500	7999189
	CHPF4860D6D*	A*EC961205DNA*	45,000	35,600	14.0	11.5	43,500	34,800	44,500	9.0	27,600	1,520	7995574
	CHPF4860D6D*	A*VC961205DNA*	45,000	35,600	14.0	11.5	43,500	34,800	44,500	9.0	27,600	1,530	7995575
	CHPF4860D6D*	G*E80805D*A*	45,000	35,600	14.0	11.5	43,500	34,800	44,000	9.0	27,600	1,500	7995576
	CHPF4860D6D*	G*EC961205DNA*	45,000	35,600	14.0	11.5	43,500	34,800	44,500	9.0	27,600	1,520	7995577
	CHPF4860D6D*	G*VC961205DNA*	45,000	35,600	14.0	11.5	43,500	34,800	44,500	9.0	27,600	1,530	7995578
	CHPF4860D6D*	A*EH800805D*A*	45,000	35,600	14.0	11.5	43,500	34,800	44,000	9.0	27,600	1,500	7999194
	CHPF4860D6D*+EEP+TXV		45,000	35,600	14.0	11.5	43,500	34,800	44,500	9.0	27,600	1,555	7995564
	CHPF4860D6D*+MBVC1600**-1A*		45,000	35,600	14.5	12.0	43,500	34,800	44,000	9.0	27,600	1,500	7995565
	CHPF4860D6D*+MBVC1600**-1A*+TXV		45,000	35,600	15.0	12.5	43,500	34,800	44,000	9.0	27,600	1,500	7995566
	CHPF4860D6D*+MBVC2000**-1A*		45,500	36,000	14.5	12.0	44,000	35,000	44,000	9.0	27,600	1,570	7995567
	CHPF4860D6D*+MBVC2000**-1A*+TXV		45,500	36,000	15.0	12.5	44,000	35,000	44,000	9.0	27,600	1,570	7995568
	CHPF4860D6D*+TXV	A*EC961205DNA*	45,000	35,600	14.5	12.0	43,500	34,800	44,500	9.0	27,600	1,520	7995569
	CHPF4860D6D*+TXV	A*VC961205DNA*	45,000	35,600	14.5	12.0	43,500	34,800	44,500	9.0	27,600	1,530	7995570
	CHPF4860D6D*+TXV	G*E80805D*A*	45,000	35,600	14.5	12.0	43,500	34,800	44,000	9.0	27,600	1,500	7995571
	CHPF4860D6D*+TXV	G*EC961205DNA*	45,000	35,600	14.5	12.0	43,500	34,800	44,500	9.0	27,600	1,520	7995572
	CHPF4860D6D*+TXV	G*VC961205DNA*	45,000	35,600	14.5	12.0	43,500	34,800	44,500	9.0	27,600	1,530	7995573
	CHPF4860D6D*+TXV	A*EH800805D*A*	45,000	35,600	14.5	12.0	43,500	34,800	44,000	9.0	27,600	1,500	7999192
	CSCF4860N6D*	A*EC961205DNA*	45,000	35,600	14.0	11.5	43,500	34,800	44,000	9.0	27,600	1,520	7995589
	CSCF4860N6D*	A*VC961205DNA*	45,000	35,600	14.0	11.5	43,500	34,800	44,000	9.0	27,600	1,530	7995590
	CSCF4860N6D*	G*E80805D*A*	45,000	35,600	14.0	11.5	43,500	34,800	44,000	9.0	27,600	1,500	7995591
	CSCF4860N6D*	G*EC961205DNA*	45,000	35,600	14.0	11.5	43,500	34,800	44,000	9.0	27,600	1,520	7995592
	CSCF4860N6D*	G*VC961205DNA*	45,000	35,600	14.0	11.5	43,500	34,800	44,000	9.0	27,600	1,530	7995593
	CSCF4860N6D*	A*EH800805D*A*	45,000	35,600	14.0	11.5	43,500	34,800	44,000	9.0	27,600	1,500	7999197
	CSCF4860N6D*+EEP+TXV		45,000	35,600	14.0	11.5	43,500	34,800	45,000	9.0	27,600	1,555	7995579
	CSCF4860N6D*+MBVC1600**-1A*		45,000	35,600	14.0	11.5	43,500	34,800	44,000	9.0	27,600	1,500	7995580
	CSCF4860N6D*+MBVC1600**-1A*+TXV		45,000	35,600	15.0	12.0	43,500	34,800	44,000	9.0	27,600	1,500	7995581

See Notes on Page 50.

Outdoor Unit	Indoor Units		Cooling Ratings ^				TVA Ratings [3]		Heating Ratings ^			CFM	AHRI #
	Coils/Air Handlers	Furnaces	Total	Sens.	SEER [1]	EER [2]	Total	Sens.	Hi [4]	HSPF [5]	Low [6]		
GSZ14 0481K* (Contd.)	CSCF4860N6D*+MBVC2000**-1A*		45,500	36,000	14.0	12.0	44,000	35,000	44,000	9.0	27,600	1,570	7995582
	CSCF4860N6D*+MBVC2000**-1A*+TXV		45,500	36,000	15.0	12.5	44,000	35,000	44,000	9.0	27,600	1,570	7995583
	CSCF4860N6D*+TXV	A*EC961205DNA*	45,000	35,600	14.5	12.0	43,500	34,800	44,000	9.0	27,600	1,520	7995584
	CSCF4860N6D*+TXV	A*VC961205DNA*	45,000	35,600	14.5	12.0	43,500	34,800	44,000	9.0	27,600	1,530	7995585
	CSCF4860N6D*+TXV	G*E80805D*A*	45,000	35,600	14.5	12.0	43,500	34,800	44,000	9.0	27,600	1,500	7995586
	CSCF4860N6D*+TXV	G*EC961205DNA*	45,000	35,600	14.5	12.0	43,500	34,800	44,000	9.0	27,600	1,520	7995587
	CSCF4860N6D*+TXV	G*VC961205DNA*	45,000	35,600	14.5	12.0	43,500	34,800	44,000	9.0	27,600	1,530	7995588
	CSCF4860N6D*+TXV	A*EH800805D*A*	45,000	35,600	14.5	12.0	43,500	34,800	44,000	9.0	27,600	1,500	7999196
GSZ14 0491K*	ARUF49C14A*+TXV		44,500	33,400	14.0	11.5	43,000	32,600	46,000	8.5	27,600	1,400	7995030
	ARUF49D14A*+TXV		44,000	33,000	14.0	11.5	42,500	32,200	46,000	8.5	27,600	1,450	9006626
	ARUF61D14A*		44,500	33,400	14.0	12.0	43,000	32,600	47,000	8.5	28,000	1,450	7995031
	ASPT49C14A*		43,500	32,600	14.0	12.0	42,000	32,600	45,500	8.2	27,600	1,395	10207403
	ASPT49D14A*		45,500	34,200	15.0	12.5	44,000	33,400	45,500	8.5	26,000	1,425	8242645
	ASPT59C14A*		45,000	33,800	14.5	12.0	43,500	33,000	46,000	8.5	26,000	1,430	8242644
	ASPT61D14A*		46,000	34,600	15.0	12.5	44,500	33,800	46,000	8.5	26,000	1,630	8242647
	AVPTC48D14A*		45,000	33,800	14.5	12.0	43,500	33,000	47,000	8.5	28,000	1,540	7995594
	AVPTC49C14A*		43,500	32,600	14.0	12.0	42,000	32,600	45,500	8.2	27,600	1,420	10207415
	AVPTC59C14A*		44,500	33,400	14.5	12.0	43,000	32,600	45,500	8.2	28,000	1,485	8996194
	AVPTC59D14A*		45,000	33,800	14.5	12.2	43,500	33,000	45,000	8.2	27,000	1,580	8996195
	AVPTC61D14A*		45,000	33,800	15.0	12.5	43,500	33,000	45,000	8.5	27,000	1,455	8996196
	CA*F4961*6D*	G*VC80805D*B*	45,500	35,200	14.0	12.0	44,000	34,400	47,500	8.5	28,000	1,500	9924253
	CA*F4961*6D*	A*EC961004CNA*	45,500	34,200	14.0	12.0	44,000	33,400	47,500	8.5	28,000	1,585	7995611
	CA*F4961*6D*	A*EH800805C*A*	45,500	34,200	14.0	12.0	44,000	33,400	47,000	8.5	28,000	1,515	7995612
	CA*F4961*6D*	A*EH801005C*A*	45,500	34,200	14.0	12.0	44,000	33,400	47,500	8.5	28,000	1,575	7995613
	CA*F4961*6D*	A*VC960804CNA*	45,500	34,200	14.5	12.0	44,000	33,400	47,000	8.5	28,000	1,525	7995614
	CA*F4961*6D*	A*VC961205DNA*	45,500	34,200	14.0	12.0	44,000	33,400	47,500	8.5	28,000	1,525	7995615
	CA*F4961*6D*	G*E80805C*B*	45,500	34,200	14.0	12.0	44,000	33,400	47,000	8.5	28,000	1,515	7995616
	CA*F4961*6D*	G*E80805D*A*	45,500	34,200	14.5	12.0	44,000	33,400	47,000	8.5	28,000	1,480	7995617
	CA*F4961*6D*	G*E81005C*B*	45,500	34,200	14.0	12.0	44,000	33,400	47,500	8.5	28,000	1,575	7995618
	CA*F4961*6D*	G*EC961004CNA*	45,500	34,200	14.0	12.0	44,000	33,400	47,500	8.5	28,000	1,585	7995619
	CA*F4961*6D*	G*VC960804CNA*	45,500	34,200	14.5	12.0	44,000	33,400	47,000	8.5	28,000	1,525	7995620
	CA*F4961*6D*	G*VC961205DNA*	45,500	34,200	14.0	12.0	44,000	33,400	47,500	8.5	28,000	1,525	7995621
	CA*F4961*6D*	A*EC961205DNA*	45,500	34,200	14.5	12.0	44,000	33,400	47,000	8.5	28,000	1,475	7996473
	CA*F4961*6D*	A*VC80805C*B*	45,500	34,200	14.0	12.0	44,000	33,400	47,500	8.5	28,000	1,510	7996474
	CA*F4961*6D*	A*VC81005C*B*	45,500	34,200	14.0	12.0	44,000	33,400	47,500	8.5	28,000	1,520	7996475
	CA*F4961*6D*	A*VC961005CNA*	45,500	34,200	14.0	12.0	44,000	33,400	47,500	8.5	28,000	1,520	7996476
	CA*F4961*6D*	G*EC961205DNA*	45,500	34,200	14.5	12.0	44,000	33,400	47,000	8.5	28,000	1,475	7996477
	CA*F4961*6D*	G*VC80805C*B*	45,500	34,200	14.0	12.0	44,000	33,400	47,500	8.5	28,000	1,510	7996478
	CA*F4961*6D*	G*VC81005C*B*	45,500	34,200	14.0	12.0	44,000	33,400	47,500	8.5	28,000	1,520	7996479
	CA*F4961*6D*	G*VC961005CNA*	45,500	34,200	14.0	12.0	44,000	33,400	47,500	8.5	28,000	1,520	7996480
	CA*F4961*6D*	A*EH800805D*A*	45,500	34,200	14.5	12.0	44,000	33,400	47,000	8.5	28,000	1,480	7999200
	CA*F4961*6D*+EEP+TXV		45,000	33,800	14.0	11.5	43,500	33,000	47,500	8.5	28,600	1,600	7995595
	CA*F4961*6D*+MBVC1600**-1A*		45,500	34,200	14.5	12.0	44,000	33,400	47,000	8.5	28,000	1,500	7995596
	CA*F4961*6D*+MBVC1600**-1A*+TXV		45,500	34,200	15.0	12.2	44,000	33,400	47,000	8.5	28,000	1,500	7995597
	CA*F4961*6D*+MBVC2000**-1A*		45,500	34,200	14.5	12.2	44,000	33,400	47,000	9.0	28,000	1,570	7995598
	CA*F4961*6D*+MBVC2000**-1A*+TXV		45,500	34,200	15.0	12.5	44,000	33,400	47,000	9.0	28,000	1,570	7995599
	CA*F4961*6D*+TXV	G*VC80805D*B*	45,500	35,200	14.5	12.2	44,000	34,400	47,500	8.5	28,000	1,500	9924254
	CA*F4961*6D*+TXV	A*EC961004CNA*	45,500	34,200	14.5	12.2	44,000	33,400	47,500	8.5	28,000	1,585	7995600
	CA*F4961*6D*+TXV	A*EH800805C*A*	45,500	34,200	14.5	12.5	44,000	33,400	47,000	8.5	28,000	1,480	7995601
	CA*F4961*6D*+TXV	A*EH801005C*A*	45,500	34,200	14.5	12.2	44,000	33,400	47,500	8.5	28,000	1,575	7995602
	CA*F4961*6D*+TXV	A*VC960804CNA*	45,500	34,200	15.0	12.5	44,000	33,400	47,000	8.5	28,000	1,525	7995603
	CA*F4961*6D*+TXV	A*VC961205DNA*	45,500	34,200	14.5	12.2	44,000	33,400	47,500	8.5	28,000	1,525	7995604
	CA*F4961*6D*+TXV	G*E80805C*B*	45,500	34,200	14.5	12.5	44,000	33,400	47,000	8.5	28,000	1,480	7995605
	CA*F4961*6D*+TXV	G*E80805D*A*	45,500	34,200	15.0	12.5	44,000	33,400	47,000	8.5	28,000	1,480	7995606
	CA*F4961*6D*+TXV	G*E81005C*B*	45,500	34,200	14.5	12.2	44,000	33,400	47,500	8.5	28,000	1,575	7995607
	CA*F4961*6D*+TXV	G*EC961004CNA*	45,500	34,200	14.5	12.2	44,000	33,400	47,500	8.5	28,000	1,585	7995608
	CA*F4961*6D*+TXV	G*VC960804CNA*	45,500	34,200	15.0	12.5	44,000	33,400	47,000	8.5	28,000	1,525	7995609

See Notes on Page 50.

Outdoor Unit	Indoor Units		Cooling Ratings ^				TVA Ratings [3]		Heating Ratings ^			CFM	AHRI #
	Coils/Air Handlers	Furnaces	Total	Sens.	SEER [1]	EER [2]	Total	Sens.	Hi [4]	HSPF [5]	Low [6]		
GSZ14 0491K* (Contd.)	CA*F4961*6D*+TXV	G*VC961205DNA*	45,500	34,200	14.5	12.2	44,000	33,400	47,500	8.5	28,000	1,525	7995610
	CA*F4961*6D*+TXV	A*EC961205DNA*	45,500	34,200	15.0	12.5	44,000	33,400	47,000	8.5	28,000	1,475	7996465
	CA*F4961*6D*+TXV	A*VC80805C*B*	45,500	34,200	14.5	12.2	44,000	33,400	47,500	8.5	28,000	1,510	7996466
	CA*F4961*6D*+TXV	A*VC81005C*B*	45,500	34,200	14.5	12.2	44,000	33,400	47,500	8.5	28,000	1,520	7996467
	CA*F4961*6D*+TXV	A*VC961005CNA*	45,500	34,200	14.5	12.0	44,000	33,400	47,500	8.5	28,000	1,520	7996468
	CA*F4961*6D*+TXV	G*EC961205DNA*	45,500	34,200	15.0	12.5	44,000	33,400	47,000	8.5	28,000	1,475	7996469
	CA*F4961*6D*+TXV	G*VC80805C*B*	45,500	34,200	14.5	12.2	44,000	33,400	47,500	8.5	28,000	1,510	7996470
	CA*F4961*6D*+TXV	G*VC81005C*B*	45,500	34,200	14.5	12.2	44,000	33,400	47,500	8.5	28,000	1,520	7996471
	CA*F4961*6D*+TXV	G*VC961005CNA*	45,500	34,200	14.5	12.0	44,000	33,400	47,500	8.5	28,000	1,520	7996472
	CA*F4961*6D*+TXV	A*EH800805D*A*	45,500	34,200	15.0	12.5	44,000	33,400	47,000	8.5	28,000	1,480	7999199
	CHPF4860D6D*	A*EC961205DNA*	45,000	33,800	14.0	11.5	43,500	33,000	47,000	8.5	28,000	1,520	7995632
	CHPF4860D6D*	A*VC961205DNA*	45,500	34,200	14.0	12.0	44,000	33,400	47,000	8.5	28,000	1,525	7995633
	CHPF4860D6D*	G*E80805D*A*	45,000	33,800	14.0	11.5	43,500	33,000	47,000	8.5	28,000	1,490	7995634
	CHPF4860D6D*	G*EC961205DNA*	45,000	33,800	14.0	11.5	43,500	33,000	47,000	8.5	28,000	1,520	7995635
	CHPF4860D6D*	G*VC961205DNA*	45,500	34,200	14.0	12.0	44,000	33,400	47,000	8.5	28,000	1,525	7995636
	CHPF4860D6D*	A*EH800805D*A*	45,000	33,800	14.0	11.5	43,500	33,000	47,000	8.5	28,000	1,490	7999203
	CHPF4860D6D*+EEP+TXV		45,000	33,800	14.0	11.5	43,500	33,000	47,000	8.5	28,600	1,600	7995622
	CHPF4860D6D*+MBVC1600**-1A*		45,500	34,200	14.5	11.5	44,000	33,400	47,000	8.5	28,000	1,500	7995623
	CHPF4860D6D*+MBVC1600**-1A*+TXV		45,500	34,200	15.0	12.0	44,000	33,400	47,000	8.5	28,000	1,500	7995624
	CHPF4860D6D*+MBVC2000**-1A*		45,500	34,200	14.5	12.0	44,000	33,400	47,000	9.0	28,000	1,570	7995625
	CHPF4860D6D*+MBVC2000**-1A*+TXV		45,500	34,200	15.0	12.5	44,000	33,400	47,000	9.0	28,000	1,570	7995626
	CHPF4860D6D*+TXV	A*EC961205DNA*	45,000	33,800	14.5	12.0	43,500	33,000	47,000	8.5	28,000	1,520	7995627
	CHPF4860D6D*+TXV	A*VC961205DNA*	45,500	34,200	14.5	12.2	44,000	33,400	47,000	8.5	28,000	1,525	7995628
	CHPF4860D6D*+TXV	G*E80805D*A*	45,000	33,800	14.5	12.0	43,500	33,000	47,000	8.5	28,000	1,490	7995629
	CHPF4860D6D*+TXV	G*EC961205DNA*	45,000	33,800	14.5	12.0	43,500	33,000	47,000	8.5	28,000	1,520	7995630
	CHPF4860D6D*+TXV	G*VC961205DNA*	45,500	34,200	14.5	12.2	44,000	33,400	47,000	8.5	28,000	1,525	7995631
	CHPF4860D6D*+TXV	A*EH800805D*A*	45,000	33,800	14.5	12.0	43,500	33,000	47,000	8.5	28,000	1,490	7999202
	CSCF4860N6D*	G*VC80805D*B*	45,500	35,200	14.0	11.5	44,000	34,400	47,500	8.5	28,000	1,500	9924255
	CSCF4860N6D*	A*EC961004CNA*	45,500	34,200	14.0	11.5	44,000	33,400	47,500	8.5	28,000	1,585	7995661
	CSCF4860N6D*	A*EC961205DNA*	45,000	33,800	14.0	11.5	43,500	33,000	47,000	8.5	28,000	1,520	7995662
	CSCF4860N6D*	A*EH800805C*A*	45,000	33,800	14.0	11.5	43,500	33,000	47,000	8.5	28,000	1,480	7995663
	CSCF4860N6D*	A*EH801005C*A*	45,500	34,200	14.0	11.5	44,000	33,400	47,500	8.5	28,000	1,575	7995664
	CSCF4860N6D*	A*VC80805C*B*	45,500	34,200	14.0	11.5	44,000	33,400	47,500	8.5	28,000	1,590	7995665
	CSCF4860N6D*	A*VC81005C*B*	45,500	34,200	14.0	11.5	44,000	33,400	47,500	8.5	28,000	1,610	7995666
	CSCF4860N6D*	A*VC960804CNA*	45,000	33,800	14.0	11.5	43,500	33,000	47,000	8.5	28,000	1,525	7995667
	CSCF4860N6D*	A*VC961005CNA*	45,500	34,200	14.0	11.5	44,000	33,400	47,500	8.5	28,000	1,610	7995668
	CSCF4860N6D*	A*VC961205DNA*	45,500	34,200	14.0	12.0	44,000	33,400	47,500	8.5	28,000	1,525	7995669
	CSCF4860N6D*	G*E80805C*B*	45,000	33,800	14.0	11.5	43,500	33,000	47,000	8.5	28,000	1,480	7995670
	CSCF4860N6D*	G*E80805D*A*	45,000	33,800	14.0	11.5	43,500	33,000	47,000	8.5	28,000	1,490	7995671
	CSCF4860N6D*	G*E81005C*B*	45,500	34,200	14.0	11.5	44,000	33,400	47,500	8.5	28,000	1,575	7995672
	CSCF4860N6D*	G*EC961004CNA*	45,500	34,200	14.0	11.5	44,000	33,400	47,500	8.5	28,000	1,585	7995673
	CSCF4860N6D*	G*EC961205DNA*	45,000	33,800	14.0	11.5	43,500	33,000	47,000	8.5	28,000	1,520	7995674
	CSCF4860N6D*	G*VC80805C*B*	45,500	34,200	14.0	11.5	44,000	33,400	47,500	8.5	28,000	1,590	7995675
	CSCF4860N6D*	G*VC81005C*B*	45,500	34,200	14.0	11.5	44,000	33,400	47,500	8.5	28,000	1,610	7995676
	CSCF4860N6D*	G*VC960804CNA*	45,000	33,800	14.0	11.5	43,500	33,000	47,000	8.5	28,000	1,525	7995677
	CSCF4860N6D*	G*VC961005CNA*	45,500	34,200	14.0	11.5	44,000	33,400	47,500	8.5	28,000	1,610	7995678
	CSCF4860N6D*	G*VC961205DNA*	45,500	34,200	14.0	12.0	44,000	33,400	47,500	8.5	28,000	1,525	7995679
	CSCF4860N6D*	A*EH800805D*A*	45,000	33,800	14.0	11.5	43,500	33,000	47,000	8.5	28,000	1,490	7999207
	CSCF4860N6D*+EEP+TXV		45,000	33,800	14.0	11.5	43,500	33,000	47,500	8.5	28,600	1,600	7995637
	CSCF4860N6D*+MBVC1600**-1A*		45,000	33,800	14.5	11.5	43,500	33,000	47,000	8.5	28,000	1,500	7995638
	CSCF4860N6D*+MBVC1600**-1A*+TXV		45,000	33,800	15.0	12.0	43,500	33,000	47,000	8.5	28,000	1,500	7995639
	CSCF4860N6D*+MBVC2000**-1A*		45,500	34,200	14.5	12.0	44,000	33,400	47,000	9.0	28,000	1,570	7995640
	CSCF4860N6D*+MBVC2000**-1A*+TXV		45,500	34,200	15.0	12.5	44,000	33,400	47,000	9.0	28,000	1,570	7995641
	CSCF4860N6D*+TXV	G*VC80805D*B*	45,500	35,200	14.5	12.0	44,000	34,400	47,500	8.5	28,000	1,500	9924256
	CSCF4860N6D*+TXV	A*EC961004CNA*	45,500	34,200	14.5	12.0	44,000	33,400	47,500	8.5	28,000	1,585	7995642
	CSCF4860N6D*+TXV	A*EC961205DNA*	45,000	33,800	14.5	12.0	43,500	33,000	47,000	8.5	28,000	1,520	7995643
	CSCF4860N6D*+TXV	A*EH800805C*A*	45,000	33,800	14.5	12.0	43,500	33,000	47,000	8.5	28,000	1,480	7995644
	CSCF4860N6D*+TXV	A*EH801005C*A*	45,500	34,200	14.5	12.0	44,000	33,400	47,500	8.5	28,000	1,575	7995645

See Notes on Page 50.

Outdoor Unit	Indoor Units		Cooling Ratings ^				TVA Ratings [3]		Heating Ratings ^			CFM	AHRI #
	Coils/Air Handlers	Furnaces	Total	Sens.	SEER [1]	EER [2]	Total	Sens.	Hi [4]	HSPF [5]	Low [6]		
GSZ14 0491K* (Contd.)	CSCF4860N6D*+TXV	A*VC80805C*B*	45,500	34,200	14.5	12.0	44,000	33,400	47,500	8.5	28,000	1,590	7995646
	CSCF4860N6D*+TXV	A*VC81005C*B*	45,500	34,200	14.5	12.0	44,000	33,400	47,500	8.5	28,000	1,610	7995647
	CSCF4860N6D*+TXV	A*VC960804CNA*	45,000	33,800	14.5	12.0	43,500	33,000	47,000	8.5	28,000	1,525	7995648
	CSCF4860N6D*+TXV	A*VC961005CNA*	45,500	34,200	14.5	12.0	44,000	33,400	47,500	8.5	28,000	1,610	7995649
	CSCF4860N6D*+TXV	A*VC961205DNA*	45,500	34,200	14.5	12.2	44,000	33,400	47,500	8.5	28,000	1,525	7995650
	CSCF4860N6D*+TXV	G*E80805C*B*	45,000	33,800	14.5	12.0	43,500	33,000	47,000	8.5	28,000	1,480	7995651
	CSCF4860N6D*+TXV	G*E80805D*A*	45,000	33,800	14.5	12.0	43,500	33,000	47,000	8.5	28,000	1,490	7995652
	CSCF4860N6D*+TXV	G*E81005C*B*	45,500	34,200	14.5	12.0	44,000	33,400	47,500	8.5	28,000	1,575	7995653
	CSCF4860N6D*+TXV	G*EC961004CNA*	45,500	34,200	14.5	12.0	44,000	33,400	47,500	8.5	28,000	1,585	7995654
	CSCF4860N6D*+TXV	G*EC961205DNA*	45,000	33,800	14.5	12.0	43,500	33,000	47,000	8.5	28,000	1,520	7995655
	CSCF4860N6D*+TXV	G*VC80805C*B*	45,500	34,200	14.5	12.0	44,000	33,400	47,500	8.5	28,000	1,590	7995656
	CSCF4860N6D*+TXV	G*VC81005C*B*	45,500	34,200	14.5	12.0	44,000	33,400	47,500	8.5	28,000	1,610	7995657
	CSCF4860N6D*+TXV	G*VC960804CNA*	45,000	33,800	14.5	12.0	43,500	33,000	47,000	8.5	28,000	1,525	7995658
	CSCF4860N6D*+TXV	G*VC961005CNA*	45,500	34,200	14.5	12.0	44,000	33,400	47,500	8.5	28,000	1,610	7995659
	CSCF4860N6D*+TXV	G*VC961205DNA*	45,500	34,200	14.5	12.2	44,000	33,400	47,500	8.5	28,000	1,525	7995660
	CSCF4860N6D*+TXV	A*EH800805D*A*	45,000	33,800	14.5	12.0	43,500	33,000	47,000	8.5	28,000	1,490	7999205
GSZ14 0601K*	ASPT61D14A*		56,500	43,000	14.0	11.5	54,500	42,000	59,000	8.5	36,000	1,800	7995680
	AVPTC60D14A*		56,000	42,500	14.0	11.5	54,000	41,500	59,000	8.5	36,000	1,745	7995032
	AVPTC61D14A*		56,000	42,500	14.0	11.5	54,000	41,500	59,000	8.5	36,000	1,775	8996197
	CA*F4961*6D*+EEP+TXV		55,500	42,000	14.0	11.5	53,500	41,000	59,000	8.5	36,600	1,600	7995681
	CA*F4961*6D*+MBVC2000**-1A*		57,000	43,500	14.0	11.5	55,000	42,500	59,000	9.0	36,600	1,770	7995682
	CA*F4961*6D*+MBVC2000**-1A*+TXV		57,000	43,500	14.5	12.0	55,000	42,500	59,000	9.0	36,600	1,770	7995683
	CA*F4961*6D*+TXV	A*EC961205DNA*	56,000	42,500	14.0	11.5	54,000	41,500	58,000	8.5	36,000	1,600	7995684
	CA*F4961*6D*+TXV	A*VC961205DNA*	56,000	42,500	14.0	11.5	54,000	41,500	58,000	8.5	36,000	1,600	7995685
	CA*F4961*6D*+TXV	G*E80805D*A*	56,000	42,500	14.0	11.5	54,000	41,500	59,000	8.5	36,600	1,700	7995686
	CA*F4961*6D*+TXV	G*EC961205DNA*	56,000	42,500	14.0	11.5	54,000	41,500	58,000	8.5	36,000	1,600	7995687
	CA*F4961*6D*+TXV	G*VC961205DNA*	56,000	42,500	14.0	11.5	54,000	41,500	58,000	8.5	36,000	1,600	7995688
	CA*F4961*6D*+TXV	A*EH800805D*A*	56,000	42,500	14.0	11.5	54,000	41,500	59,000	8.5	36,600	1,700	7999208
	CHPF4860D6D*+EEP+TXV		55,000	42,000	14.0	11.5	53,000	41,000	57,000	8.5	36,600	1,600	7995689
	CHPF4860D6D*+MBVC2000**-1A*		57,000	43,500	14.0	11.5	55,000	42,500	59,000	9.0	36,000	1,770	7995690
	CHPF4860D6D*+MBVC2000**-1A*+TXV		57,000	43,500	14.5	12.0	55,000	42,500	59,000	9.0	36,000	1,770	7995691
	CHPF4860D6D*+TXV	A*EC961205DNA*	56,000	42,500	14.0	11.5	54,000	41,500	59,000	8.5	36,000	1,600	7995692
	CHPF4860D6D*+TXV	A*VC961205DNA*	56,000	42,500	14.0	11.5	54,000	41,500	58,000	8.5	36,600	1,600	7995693
	CHPF4860D6D*+TXV	G*E80805D*A*	56,000	42,500	14.0	11.5	54,000	41,500	59,000	8.5	37,000	1,700	7995694
	CHPF4860D6D*+TXV	G*EC961205DNA*	56,000	42,500	14.0	11.5	54,000	41,500	59,000	8.5	36,000	1,600	7995695
	CHPF4860D6D*+TXV	G*VC961205DNA*	56,000	42,500	14.0	11.5	54,000	41,500	58,000	8.5	36,600	1,600	7995696
	CHPF4860D6D*+TXV	A*EH800805D*A*	56,000	42,500	14.0	11.5	54,000	41,500	59,000	8.5	37,000	1,700	7999210
	CSCF4860N6D*+MBVC2000**-1A*		57,000	43,500	14.0	11.5	55,000	42,500	59,000	9.0	36,000	1,770	7995697
	CSCF4860N6D*+MBVC2000**-1A*+TXV		57,000	43,500	14.0	12.0	55,000	42,500	59,000	9.0	36,000	1,770	7995698
	CSCF4860N6D*+TXV	A*EC961205DNA*	56,000	42,500	14.0	11.5	54,000	41,500	59,000	8.5	36,000	1,600	7995699
	CSCF4860N6D*+TXV	A*VC961205DNA*	56,000	42,500	14.0	11.5	54,000	41,500	58,000	8.5	36,000	1,600	7995700
	CSCF4860N6D*+TXV	G*E80805D*A*	56,000	42,500	14.0	11.5	54,000	41,500	59,000	8.5	36,000	1,700	7995701
	CSCF4860N6D*+TXV	G*EC961205DNA*	56,000	42,500	14.0	11.5	54,000	41,500	59,000	8.5	36,000	1,600	7995702
	CSCF4860N6D*+TXV	G*VC961205DNA*	56,000	42,500	14.0	11.5	54,000	41,500	58,000	8.5	36,000	1,600	7995703
	CSCF4860N6D*+TXV	A*EH800805D*A*	56,000	42,500	14.0	11.5	54,000	41,500	59,000	8.5	36,000	1,700	7999211

^ Rated in accordance with ANSI/AHRI Standard 210/240
[1] Seasonal Energy Efficiency Ratio
[2] Energy Efficiency Ratio @ 80°F/ 67°F/ 95°F
[3] TVA Rating: BTU/h @ 75°F/ 63°F - 95°F
[4] Rated heating capacity at 47°F outdoor per AHRI 210/240
[5] HSPF = Heating Seasonal Performance Factor
[6] Heating capacity at 17°F outdoor
[7] CFM at High stage
[8] CFM at Intermediate and low stage

Notes

- Always check the S&R plate for electrical data on the unit being installed.
- When matching outdoor unit to indoor unit, use the piston supplied with the outdoor unit or that specified on the piston kit chart supplied with the indoor unit.
- EEP - Order from Service Dept. Part No. B13707-38 or new Solid State Board B13707-35S. Part No. B13707-38 is not interchangeable with B13707-35S. The Goodman brand gas furnace contains the EEP cooling time delay.

ECN	REV	ZONE	DESCRIPTION	CHK	D	DATE
XXXXXXX	A	XXXXX		-	GL	

MODEL	DIMENSIONS		
	W"	D"	H"
GSZ140181/191**	29	29	34½
GSZ140241/251**	29	29	34½
GSZ140301K*	29	29	36¼
GSZ140311A*	35½	35½	34⅝
GSZ140361K*	29	29	36¼
GSZ140371A*	35½	35½	40
GSZ140421K*	35½	35½	39¾
GSZ140481K*	29	29	36¼
GSZ140491K*	35½	35½	34½
GSZ140601K*	35½	35½	34½

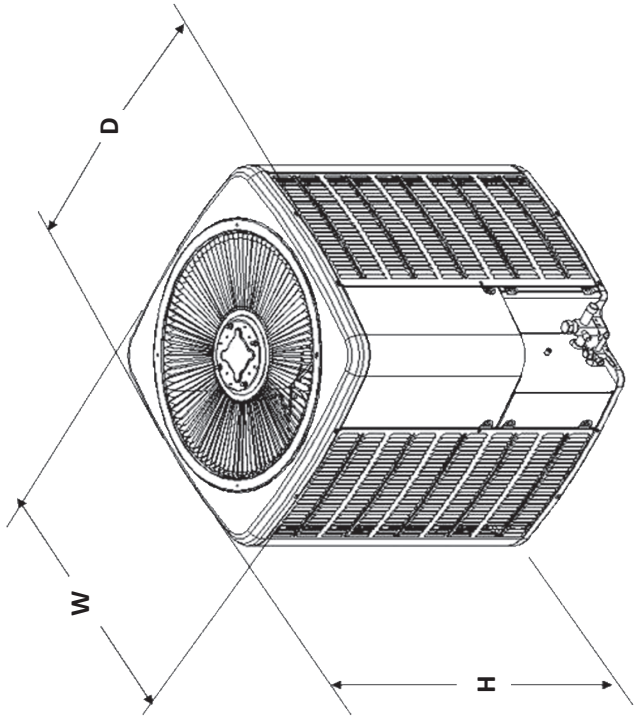

SPECIAL CHARACTERISTICS:

6σ = 6SIGMA

CC = CRITICAL CHARACTERISTIC

SC = SIGNIFICANT CHARACTERISTIC

COMPONENTS AND MATERIALS SPECIFIED HEREIN WILL ALSO CONFORM TO THE APPLICABLE SECTION OF GOODMAN MSP 8 24.01 WORKMANSHIP STANDARD FOR FIT, FEEL AND FINISH.

CONFIDENTIAL PROPERTY OF THE GOODMAN MANUFACTURING COMPANY, L.P. NOT TO BE DISCLOSED TO OTHERS, COPIED, OR USED FOR ANY PURPOSE EXCEPT AS AUTHORIZED IN WRITING. MUST BE RETURNED UPON DEMAND, ON COMPLETION OF ORDER, OR OTHER PURPOSE FOR WHICH IT WAS LENT.

DRAWING TO BE INTERPRETED IN ACCORDANCE WITH ASME Y14.100 DIMENSIONS ARE IN INCHES UNLESS OTHERWISE NOTED

TOLERANCES:
ANGLES ± 1°
X : ± 1 XX : ± .03
XXX : ± .015
HOLE Ø : ± .005
TUBE CUT LGTH : ± .063

DWN BY:

ENG:

Goodman Manufacturing Co., LLC

GSZ14

DO NOT SCALE DRAWING

SHT 1 OF 1

REV A

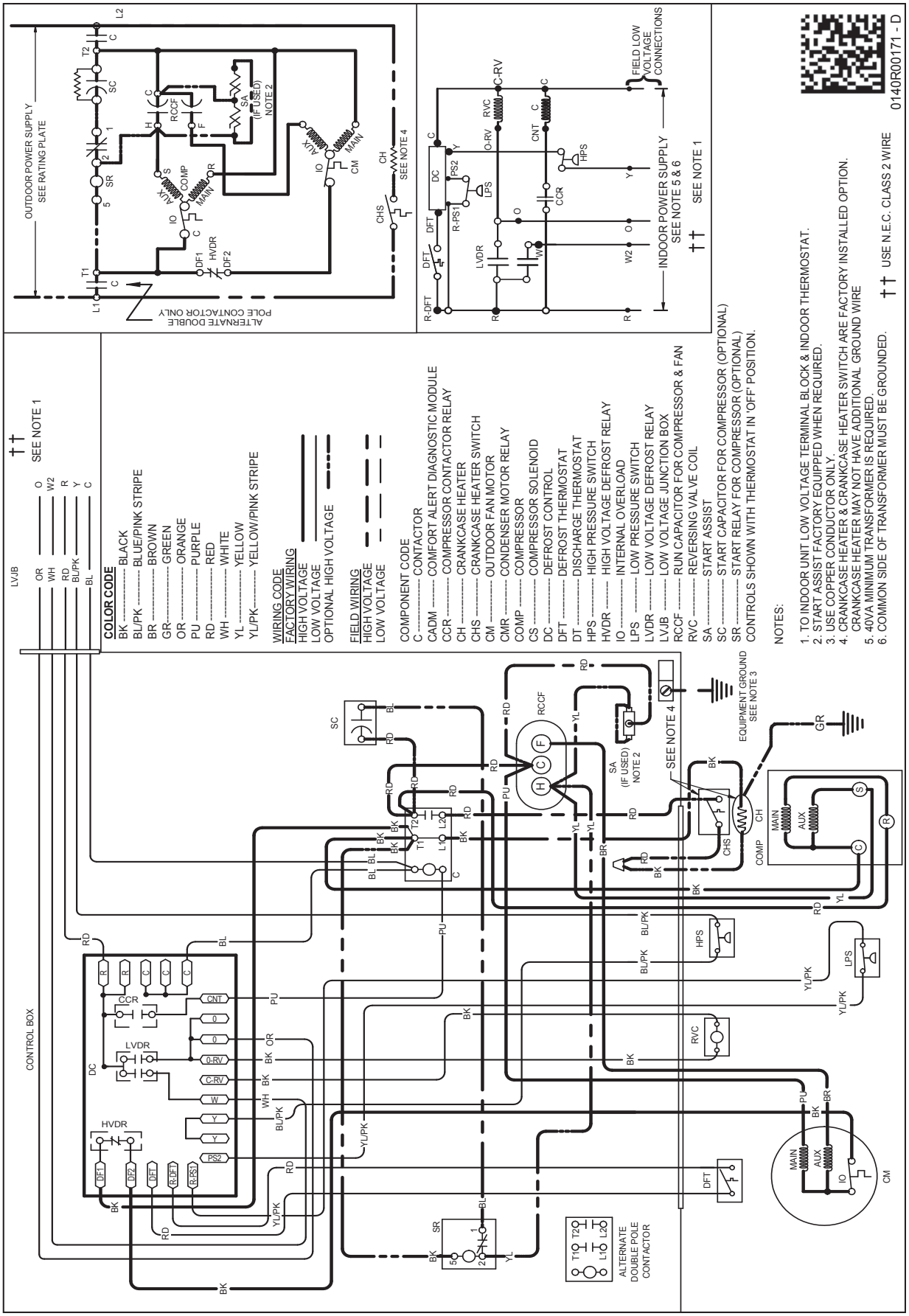

WARNING

High Voltage: Disconnect all power before servicing or installing this unit. Multiple power sources may be present. Failure to do so may cause property damage, personal injury, or death.

Wiring is subject to change. Always refer to the wiring diagram or the unit for the most up-to-date wiring.

Model #	Description	GSZ14 0181/191**	GSZ14 0241/251**	GSZ14 0301**	GSZ14 0311**	GSZ14 0361**	GSZ14 0371**
ABK-20	Anchor Bracket Kit ◊	X	X	X		X	
ASC-01	Anti-Short Cycle Kit	X	X	X	X	X	X
AFE18-60A	All-fuel Kit	X	X	X		X	
OT/EHR18-60	Emergency Heat Relay kit	X	X	X		X	
FSK01A[1]	Freeze Protection Kit	X	X	X	X	X	X
CSR-U-1	Hard-start Kit	X	X	X	X	X	X
LAKT01A	Low-Ambient Kit	X	X	X	X	X	X
0130R00000S	Low-Pressure Switch Kit	X	X	X		X	
OT18-60A[2]	Outdoor Thermostat	X	X	X	X	X	X
TX2N4A [3]	TXV Kit	X	X				
TX3N4 [3]	TXV Kit			X	X	X	X
TX5N4 [3]	TXV Kit						

◊ Contains 20 brackets; four brackets needed to anchor unit to pad
1 Installed on indoor coil
2 Required for heat pump applications where ambient temperatures fall below 0°F with 50% or higher relative humidity.
3 Condensing units and heat pumps with reciprocating compressors require the use of start-assist components when used in conjunction with an indoor coil using a non-bleed thermal expansion valve refrigerant metering device or liquid line solenoid kit. The TXV should always be sized based on the tonnage of the outdoor unit.

Model #	Description	GSZ14 0421**	GSZ14 0481/491**	GSZ14 0601**
ABK-20	Anchor Bracket Kit ◊	X	X	X
ASC-01	Anti-Short Cycle Kit	X	X	X
AFE18-60A	All-fuel Kit	X	X	X
OT/EHR18-60	Emergency Heat Relay kit	X	X	X
FSK01A[1]	Freeze Protection Kit	X	X	X
CSR-U-1	Hard-start Kit	X	X	X
LAKT01A	Low-Ambient Kit	X	X	X
0130R00000S	Low-Pressure Switch Kit	X	X	X
OT18-60A[2]	Outdoor Thermostat	X	X	X
TX2N4A [3]	TXV Kit			
TX3N4 [3]	TXV Kit			
TX5N4 [3]	TXV Kit	X	X	X

◊ Contains 20 brackets; four brackets needed to anchor unit to pad
1 Installed on indoor coil
2 Required for heat pump applications where ambient temperatures fall below 0°F with 50% or higher relative humidity.
3 Condensing units and heat pumps with reciprocating compressors require the use of start-assist components when used in conjunction with an indoor coil using a non-bleed thermal expansion valve refrigerant metering device or liquid line solenoid kit. The TXV should always be sized based on the tonnage of the outdoor unit.

Amana® is a trademark of Maytag Corporation or its related companies and used under license to Goodman Company, L.P. All rights reserved. Our continuing commitment to quality products may mean a change in specifications without notice. © 2016 Goodman Company, L.P. • Houston, Texas • Printed in the USA.