Distinctions®
Amana® Heating & Air Conditioning

GSH13

1½- To 5-Ton Split System Heat Pumps
13 SEER / R-22

Contents

Nomenclature 2
Product Specifications 3
AHRI Ratings..... 4
Dimensions 5
Wiring Diagrams 6
Accessories 7

Standard Features

- Energy-efficient compressor
- Quiet condenser fan system
- Copper tube/aluminum fin coil
- For use with R-22 refrigerant and charged with inert gas for shipping
- Factory-installed bi-flow liquid line filter drier
- Low-pressure switch
- Time-initiated, temperature-terminated defrost control
- Service valves with sweat connections and easy-access gauge ports
- Contactor with lug connection
- Ground lug connection
- ETL Listed

Cabinet Features

- Louver design sound control top
- Steel louver coil guard
- Heavy-gauge, galvanized-steel cabinet with rust-resistant screws
- Attractive Architectural Gray powder-paint finish with 500-hour salt-spray approval
- Single-panel access to controls with space provided for field-installed accessories
- When properly anchored, meets the 2010 Florida Building Code unit integrity requirements for hurricane-type winds (Anchor bracket kits available.)

5 YEAR PARTS LIMITED WARRANTY

INTERTEK ETL LISTED C US

AHRI CERTIFIED

* Complete warranty details available from your local dealer or at www.amana-hac.com.

Amana® is a trademark of Maytag Corporation or its related companies and used under license to Goodman Company, L.P., Houston, Texas.

Supersedes 9/13

NOMENCLATURE

G	S	H	13	036	1	A	A
1	2	3	4,5	6,7,8	9	10	11

Brand
G Goodman® (Standard Feature Set Models)

Product Category
S Split System

Unit Type
C Condenser R-22
H Heat Pump R-22

Efficiency
13 13 SEER

Nominal Capacity

018	1½ Tons	042	3½ Tons
024	2 Tons	048	4 Tons
030	2½ Tons	060	5 Tons
036	3 Tons		

Electrical
1 208/230 V, 1 Phase, 60 Hz

Engineering *
Major Revision

Engineering *
Minor Revision

* Neither used for order entry or inventory management.

Specifications

	GSH13 0181C*	GSH13 0241C*	GSH13 0301C*	GSH13 0361C*	GSH13 0421B*	GSH13 0481B*	GSH13 0601A*
Capacities and Ratings							
Tonnage	1½	2	2½	3	3½	4	5
Decibels	73	71	72	71	76	76	77
Compressor							
RLA	8.3	10.8	13.5	14.1	19.2	19.9	25.0
LRA	40.3	56.0	68.0	75.0	112.0	104.0	148.0
Type	Scroll	Scroll	Scroll	Scroll	Scroll	Scroll	Scroll
Condenser Fan Motor							
Horsepower	1/8	1/8	1/8	¼	¼	¼	1/6
FLA	0.7	0.7	0.7	1.5	1.5	1.5	1.1
Refrigerant System							
Refrigerant Line Size							
Liquid Line Size (“O.D.)	⅜"	⅜"	⅜"	⅜"	⅜"	⅜"	⅜"
Suction Line Size (“O.D.)	¾"	¾"	¾"	⅞"	1⅛"	1⅛"	1⅛"
Refrigerant Connection Size							
Liquid Valve Size (“O.D.)	⅜"	⅜"	⅜"	⅜"	⅜"	⅜"	⅜"
Suction Valve Size (“O.D.)	¾"	¾"	¾"	⅞"	⅞"	⅞"	⅞"
Valve Type	Sweat	Sweat	Sweat	Sweat	Sweat	Sweat	Sweat
Refrigerant Charge	127	122	130	188	246	208	233
Electrical Data							
Voltage-Hz	208/230-60	208/230-60	208/230-60	208/230-60	208/230-1-60	208/230-1-60	208/230-60
Minimum Circuit Ampacity [2]	11.1	14.2	17.6	19.1	25.5	26.4	32.3
Max. Overcurrent Protection [3]	15	25	30	30	40	45	50
Min / Max Volts	197/253	197/253	197/253	197/253	197/253	197/253	197/253
Electrical Conduit Size	½" or ¾"	½" or ¾"	½" or ¾"	½" or ¾"	½" or ¾"	½" or ¾"	½" or ¾"
Equipment Weight (lbs)	142	147	146	146	152	152	278
Ship Weight (lbs)	159	164	164	164	170	170	300

[1] Tested and rated in accordance with AHRI Standard 210/240

[2] Wire size should be determined in accordance with National Electrical Codes; extensive wire runs will require larger wire sizes

[3] Must use time-delay fuses or HACR-type circuit breakers of the same size as noted.

Notes

- Always check the S&R plate for electrical data on the unit being installed.
- Installer will need to supply ⅞” to 1⅛” adapters for suction line connections.
- Charge to be added for 15’ of ⅜” liquid line. System charge must be adjusted per Installation Instructions Final Charge Procedure.
- Installation of these units requires the specified TXV Kit to be installed on the indoor coil. THE SPECIFIED TXV IS DETERMINED BY THE OUTDOOR UNIT NOT THE INDOOR COIL.

AHRI Ratings

Outdoor Unit	Indoor Unit	Cooling Capacity[1]		SEER[2]	EER[3]	TVA Ratings[4]		Heating Capacity[1]			CFM	AHRI #
		Total	Sens.			Total	Sens.	High	HSPF[5]	Low		
GSH130484A*	AR*F486016B*	45,000	33,800	13.0	11.0	41,500	31,800	43,000	8.2	27,000	1,600	1492572
GSH130601A*	AR*F486016B*	55,500	41,000	13.0	11.0	51,500	37,000	55,500	8.5	35,000	1,800	1492576
GSH130603A*	AR*F486016B*	55,500	41,000	13.0	11.0	51,500	37,000	55,500	8.5	35,000	1,800	1492581
GSH130604A*	AR*F486016B*	55,500	41,000	13.0	11.0	51,500	37,000	55,500	8.5	35,000	1,800	1492585
GSH130241(B,C)*	AR*F182416B*+TXV	23,000	17,800	13.0	11.0	21,400	15,800	21,400	7.7	11,800	860	4675037
GSH130301(B,C)*	AR*F363616B*	27,800	20,200	13.0	11.0	25,800	19,300	25,400	7.7	15,300	1,020	4692016
GSH130181(B,C)*	AR*F182416B*	17,600	13,100	13.0	11.0	16,300	11,800	16,800	7.7	8,900	625	4675036
GSH130361(B,C)*	AR*F374316B*	33,600	26,200	13.0	11.0	31,000	23,400	31,400	7.7	18,200	1,260	4692017
GSH130604AC	AR*F486016B*	55,500	41,500	13.0	11.0	51,500	37,000	55,500	8.5	35,000	1,800	4982919
GSH130481B*	AR*F486016B*	45,000	33,800	13.0	11.0	41,500	31,800	43,000	8.2	27,000	1,600	5528480
GSH130421B*	AR*F364216B*	40,000	29,800	13.0	11.0	37,200	28,200	39,000	8.0	23,000	1,250	5528479
GSH130363A*	AR*F374316B*	33,600	26,200	13.0	11.0	31,000	23,400	31,400	7.7	18,200	1,260	5528484
GSH130483B*	AR*F486016B*	45,000	33,800	13.0	11.0	41,500	31,800	43,000	8.2	27,000	1,600	5528481
GSH130484AD	AR*F486016B*	45,000	33,200	13.0	11.0	41,500	31,800	43,000	8.2	27,000	1,600	5528482

[1] BTU/h
[2] Seasonal Energy Efficiency Ratio; Certified per AHRI 210/240 @ 80°F/ 67°F/ 95°F
[3] Energy Efficiency Ratio @ 80°F/ 67°F/ 95°F
[4] TVA Rating: BTU/h @ 75°F/ 63°F - 95°F
[5] HSPF = Heating Seasonal Performance Factor

Notes

- Always check the S&R plate for electrical data on the unit being installed.
- When matching outdoor unit to indoor unit, use the piston supplied with outdoor unit or that specified on the piston kit chart supplied with the indoor unit.
- EEP - Order from Service Dept. Part No. B13707-38 or new Solid State Board B13707-35S. Part No. B13707-38 is not interchangeable with B13707-35S. The Goodman Gas Furnace contains the EEP cooling time delay

Dimensions

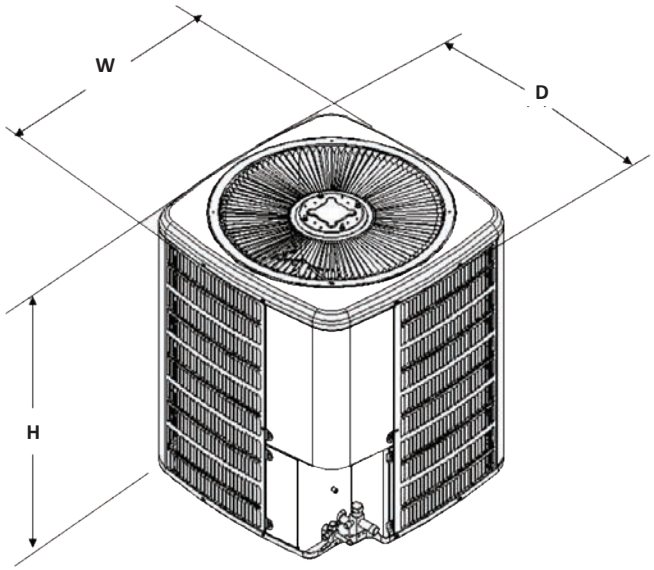

Model	Dimensions		
	W”	D”	H”
GSH130181C	26	26	32¼
GSH130241C	26	26	32¼
GSH130301C	29	29	34¾
GSH130361C	29	29	38¼
GSH130421B	29	29	32¼
GSH130481B	29	29	34¾
GSH130601A	35½	35½	34¾

WIRING DIAGRAM

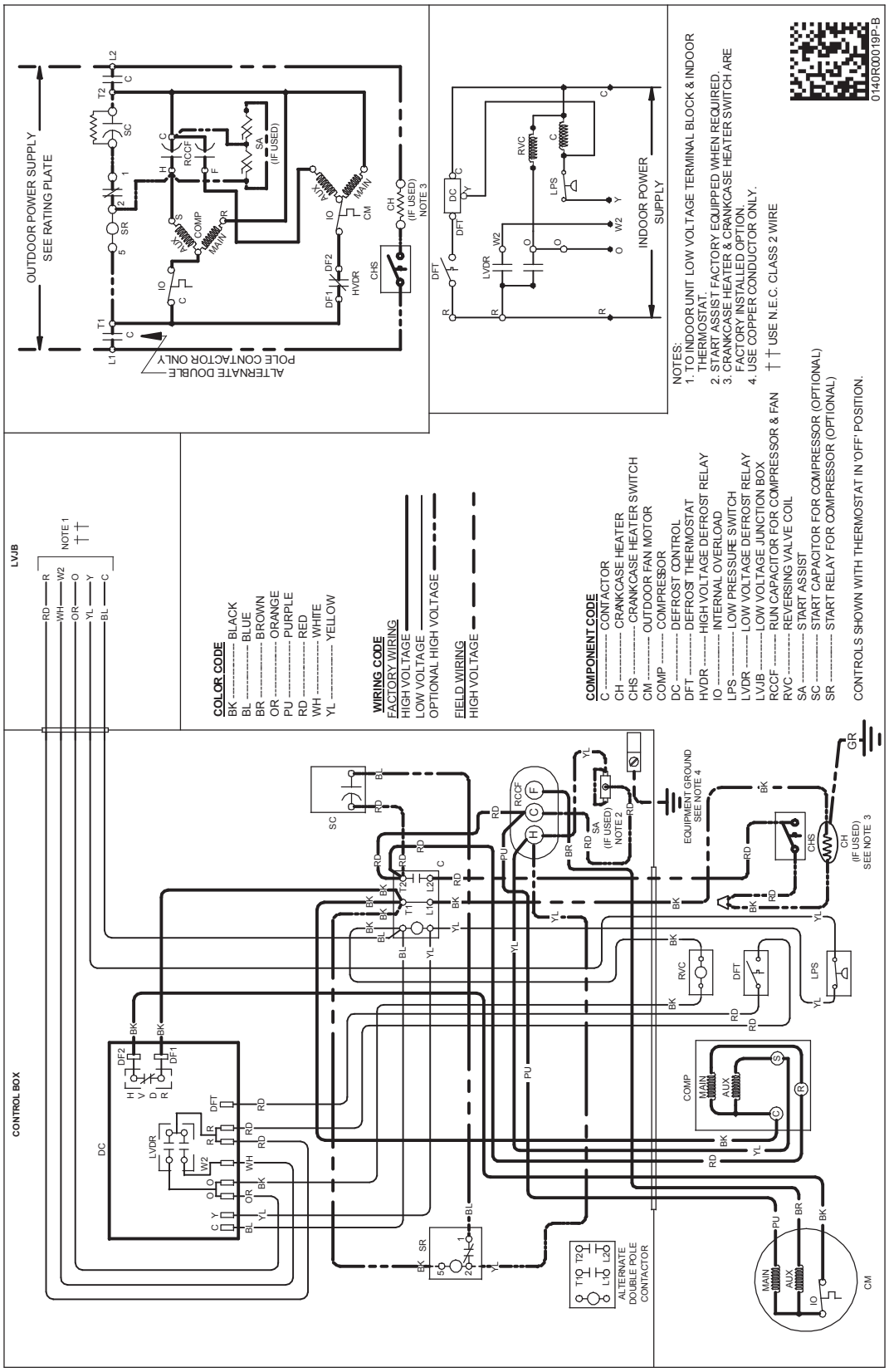

WARNING **High Voltage:** Disconnect all power before servicing or installing this unit. Multiple power sources may be present. Failure to do so may cause property damage, personal injury, or death.

Wiring is subject to change. Always refer to the wiring diagram or the unit for the most up-to-date wiring.

Accessories

Model	Description	GSH13 018	GSH13 024	GSH13 030	GSH13 036	GSH13 042	GSH13 048	GSH13 060
ABK-20	Anchor Bracket Kit *	X	X	X	X	X	X	X
ASC01	Anti-Short Cycle Kit	X	X	X	X	X	X	X
CSR-U-1	Hard-start Kit	X	X	X	X	X	X	
CSR-U-2	Hard-start Kit							
CSR-U-3	Hard-start Kit							X
FSK01A[1]	Freeze Protection Kit	X	X	X	X	X	X	X
OT/EHR18-60	Emergency Heat Relay kit	X	X	X	X	X	X	X
OT18-60A[2]	Outdoor Thermostat with Lockout Stat	X	X	X	X	X	X	X

* Contains 20 brackets; four brackets needed to anchor unit to pad

[1] Installed on indoor coil

[2] Required for heat pump applications where ambient temperatures fall below 0 °F with 50% or higher relative humidity.

[3] Condensing units and heat pumps with reciprocating compressors require the use of start-assist components when used in conjunction with an indoor coil using a non-bleed thermal expansion valve refrigerant metering device. The TXV should always be sized based on the tonnage of the outdoor unit.

Notes

Amana® is a trademark of Maytag Corporation or its related companies and used under license to Goodman Company, L.P. All rights reserved. Our continuing commitment to quality products may mean a change in specifications without notice. © 2013 • Goodman Company, L.P. • Houston, Texas • Printed in the USA.