Distinctions®
Amana Heating & Air Conditioning

GPC14H
Packaged Air Conditioner
up to 14 SEER
2 to 5 Tons

Cooling Capacity: 24,600 - 57,500 BTU/h

Standard Features

- Energy-efficient compressor with internal relief valve
- EEM blower motor
- Quiet horizontal discharge
- Copper tube / aluminum fin condensor coil
- Totally enclosed, permanently lubricated condenser fan motor
- Fully charged system
- 5 kW to 20 kW electric heat kit available as a field-installed option
- AHRI Certified; ETL listed

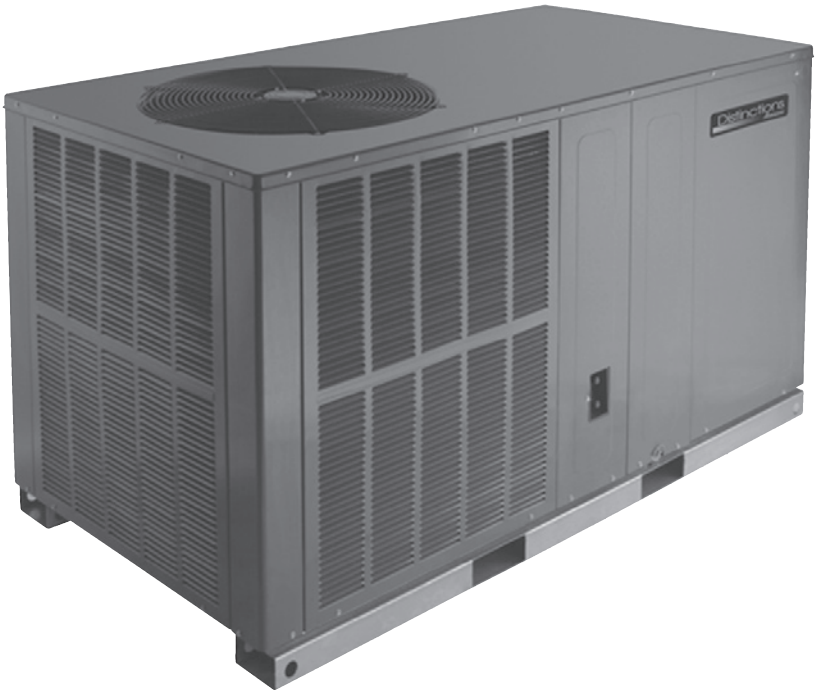

Cabinet Features

- Heavy-gauge galvanized-steel cabinet with attractive Architectural Gray powder-paint finish
- Fully insulated blower compartment has convenient access panels
- Louvered condenser coil protection
- One footprint; three heights

Contents

Nomenclature 2
Product Specifications 3
Expanded Cooling Data 6
Airflow Data 18
Heater Kit Specifications 20
Dimensions 21
Wiring Diagram 22
Accessories 23

10 YEAR PARTS LIMITED WARRANTY
R-410A REFRIGERANT
INTERTEK ETL LISTED C US
AHRI CERTIFIED www.ahridirectory.org

* Complete warranty details available from your local dealer or at www.amana-hac.com. To receive the 10-Year Parts Limited Warranty, online registration must be completed within 60 days of installation. Online registration is not required in California or Quebec.

Amana® is a trademark of Maytag Corporation or its related companies and used under license to Goodman Company, L.P., Houston, Texas.

NOMENCLATURE

G	P	C	14	36	H	4	1	A	*
1	2	3	4,5	6,7	8	9	10	11	12

Brand
G Goodman or Distinctions™

Product Category
P Packaged Unit

Type
H Heat Pump
C Air Conditioner

Efficiency
13 13 SEER
14 14 SEER
15 15 SEER
16 16 SEER

Nominal Capacity
24 2 Tons
30 2½ tons
36 3 Tons
42 3½ Tons
48 4 Tons
60 5 Tons

Configuration
H Horizontal
M Multi-position

Refrigerant
2 R-22
4 R-410A

Voltage Designator
1 208-230/1/60
3 208-230/3/60
4 460/3/60

Engineering
Major Revision

Engineering
Minor Revision

Specifications

Models	GPC14 24H41AC	GPC14 24H41B*	**GPC14 24H41C***	GPC14 30H41AC	GPC14 30H41B*	GPC14 30H41C*
Cooling Capacity						
Cooling Capacity (BTU/h)	24,000	24,000	24,000	28,400	28,400	28,400
Sensible BTU/h	18,200	18,200	18,200	21,600	21,600	21,600
SEER / EER	14.0 / 12.0	14.0 / 12.0	14.0 / 12.0	14.0 / 12.0	14.0 / 12.0	14.0 / 12.0
Decibels	76	76	76	76	76	76
AHRI Numbers	4635463	5265765	5732583	4635464	5265766	5677886
Evaporator Motor						
Type	EEM	EEM	EEM	EEM	EEM	EEM
Wheel (D x W)	10 x 8	10 x 8	10 x 8	10 x 8	10 x 8	10 x 8
Cooling CFM	875	875	875	1,050	1,050	1,050
Fan-Only CFM	800	800	800	950	950	950
RLA	1.5	1.5	1.5	1.86	1.86	1.86
No. of Speeds	5	5	5	5	5	5
Horsepower - RPM	½ - 1050	½ - 1050	½ - 1050	½ - 1050	½ - 1050	½ - 1050
Evaporator Coil						
Face Area (ft^2)	5.25	4.66	4.66	5.25	5.25	5.25
Rows Deep/ Fins per Inch	3/ 16	3/ 16	3/ 16	3/ 16	3/ 16	3/ 16
Indoor Orifice Size	0.057	0.057	0.057	0.062	0.062	0.062
Filter Size (")	20 x 20 x 1	20 x 20 x 1	20 x 20 x 1	20 x 25 x 1	20 x 25 x 1	20 x 25 x 1
All-aluminum coil	---	X	X	---	X	X
Drain Size (NPT)	¾"	¾"	¾"	¾"	¾"	¾"
Refrigerant Charge (oz.)	59	59	60	53	61	61
Condenser Fan / Coil						
Horsepower - RPM	1/6 - 815	1/6 - 815	1/6 - 815	1/6 - 815	1/6 - 815	1/6 - 815
RLA/LRA	1.1 / 1.7	1.1 / 1.7	1.1 / 1.7	1.1 / 1.7	1.1 / 1.7	1.1 / 1.7
Fan Diameter/ # Fan Blades	22 / 2	22 / 2	22 / 2	22 / 2	22 / 2	22 / 2
Face Area (ft^2)	12.3	12.3	12.3	12.3	12.3	12.3
Rows Deep/ Fins per Inch	1 / 26	1 / 26	1 / 26	1 / 26	1 / 26	1 / 26
Compressor						
Quantity / Type	1 / Scroll	1 / Scroll	1 / Rotary	1 / Scroll	1 / Scroll	1 / Scroll
Stage	Single	Single	Single	Single	Single	Single
Compressor RLA/LRA	13.5 / 58.3	13.5 / 58.3	7.7/37	12.8 / 64	12.8 / 64	12.8 / 64
Electrical Data						
Voltage-Phase	208/230-1	208/230-1	208/230-1	208/230-1	208/230-1	208/230-1
Indoor Blower FLA	1.5	1.5	1.5	1.86	1.86	1.86
Outdoor Fan RLA	1.1	1.1	1.1	1.1	1.1	1.1
Total Unit Amps	16.1	16.1	10.3	15.76	15.76	15.76
Min. Circuit Ampacity[1]	19.5	19.5	12.2	19	19	19
Max. Overcurrent Protection (amps)[2]	30	30	15	30	30	30
Ship Weight (lbs)	290	305	305	290	310	310
Operating Weight (lbs)	280	310	310	280	315	315

[1] Wire size should be determined in accordance with National Electrical Codes. Extensive wire runs will require larger wire sizes.

[2] May use fuses or HACR-type circuit breakers of the same size as noted.

Note: Always check the S&R plate for electrical data on the unit being installed.

Specifications

Models	GPC14 36H41AC	GPC14 36H41B*	GPC14 36H41C*	GPC14 42H41AC	GPC14 42H41B*	GPC14 42H41C*
Cooling Capacity						
Cooling Capacity (BTU/h)	35,600	35,600	35,600	40,000	40,000	40,000
Sensible BTU/h	27,100	27,100	27,100	30,400	30,400	30,400
SEER / EER	14.0 / 12.0	14.0 / 12.0	14.0 / 12.0	14.0 / 12.0	14.0 / 12.0	14.0 / 12.0
Decibels	78	78	78	78	78	78
AHRI Numbers	4635465	5265767	5677887	4635466	5265768	5677888
Evaporator Motor						
Type	EEM	EEM	EEM	EEM	EEM	EEM
Wheel (D x W)	10 x 8	10 x 8	10 x 8	10 x 8	10 x 8	10 x 8
Cooling CFM	1,200	1,200	1,200	1,200	1,200	1,200
Fan-Only CFM	1,100	1,100	1,100	1,200	1,200	1,200
RLA	1.86	1.86	1.86	2.9	2.9	2.9
No. of Speeds	5	5	5	5	5	5
Horsepower - RPM	½ - 1050	½ - 1050	½ - 1050	½ - 1050	½ - 1050	½ - 1050
Evaporator Coil						
Face Area (ft^2)	5.2	5.25	5.25	6.2	6.2	6.2
Rows Deep/ Fins per Inch	3/ 14	3/ 14	3/ 14	4/ 14	4/ 14	4/ 14
Indoor Orifice Size	0.068	0.068	0.068	0.072	0.072	0.072
Filter Size (")	25 x 25 x 1	25 x 25 x 1	25 x 25 x 1	(2) 20 x 20 x 1	(2) 20 x 20 x 1	(2) 20 x 20 x 1
All-aluminum coil	---	X	X	---	X	X
Drain Size (NPT)	¾"	¾"	¾"	¾"	¾"	¾"
Refrigerant Charge (oz.)	65	65	65	94	94	94
Condenser Fan / Coil						
Horsepower - RPM	¼ - 830	¼ - 830	¼ - 830	¼ - 1075	¼ - 1075	¼ - 1075
RLA/LRA	1.5 / 3.0	1.5 / 3.0	1.5 / 3.0	1.4 / 2.9	1.4 / 2.9	1.4 / 2.9
Fan Diameter/ # Fan Blades	22 / 3	22 / 3	22 / 3	22 / 4	22 / 4	22 / 4
Face Area (ft^2)	12.3	12.3	12.3	16	16	16
Rows Deep/ Fins per Inch	1 / 26	1 / 26	1 / 26	1 / 28	1 / 28	1 / 28
Compressor						
Quantity / Type	1 / Scroll	1 / Scroll	1 / Scroll	1 / Scroll	1 / Scroll	1 / Scroll
Stage	Single	Single	Single	Single	Single	Single
Compressor RLA/LRA	16.7 / 79	16.7 / 79	16.7 / 79	17.9 / 112	17.9 / 112	17.9 / 112
Electrical Data						
Voltage-Phase	208/230-1	208/230-1	208/230-1	208/230-1	208/230-1	208/230-1
Indoor Blower FLA	1.86	1.86	1.86	2.9	2.9	2.9
Outdoor Fan RLA	1.5	1.5	1.5	1.4	1.4	1.4
Total Unit Amps	20.06	20.06	20.06	22.2	22.2	22.2
Min. Circuit Ampacity[1]	24.2	24.2	24.2	26.6	26.6	26.6
Max. Overcurrent Protection (amps)[2]	40	40	40	40	40	40
Ship Weight (lbs)	370	315	315	370	360	360
Operating Weight (lbs)	360	320	320	360	365	365

[1] Wire size should be determined in accordance with National Electrical Codes. Extensive wire runs will require larger wire sizes.

[2] May use fuses or HACR-type circuit breakers of the same size as noted.

Note: Always check the S&R plate for electrical data on the unit being installed.

Specifications

Models	GPC14 48H41AC	GPC14 48H41B*	GPC14 48H41C*	GPC14 60H41A*	GPC14 60H41B*	GPC14 60H41C*
Cooling Capacity						
Cooling Capacity (BTU/h)	46,000	46,000	46,000	57,500	57,500	57,500
Sensible BTU/h	35,300	35,300	35,300	40,800	40,800	40,800
SEER / EER	14.0 / 12.0	14.0 / 12.0	14.0 / 12.0	14.0 / 12.0	14.0 / 12.0	14.0 / 12.0
Decibels	80	80	80	80	80	80
AHRI Numbers	4635467	5265769	5677889	4385084	5265776	5677890
Evaporator Motor						
Type	EEM	EEM	EEM	EEM	EEM	EEM
Wheel (D x W)	10 x 8	10 x 8	10 x 8	11 x 8	11 x 8	11 x 8
Cooling CFM	1,600	1,600	1,600	1,600	1,700	1,700
Fan-Only CFM	1,400	1,400	1,400	1,600	1,700	1,700
RLA	2.9	2.9	2.9	2.9	2.9	2.9
No. of Speeds	5	5	5	5	5	5
Horsepower - RPM	¾ - 1050	¾ - 1050	¾ - 1050	¾ - 1050	¾ - 1050	¾ - 1050
Evaporator Coil						
Face Area (ft^2)	6.2	6.2	6.2	7.0	7.0	7
Rows Deep/ Fins per Inch	4/ 14	4/ 14	4/ 14	4/ 14	4/ 14	4/ 14
Indoor Orifice Size	0.078	0.078	0.078	0.088	0.086	0.086
Filter Size (")	(2) 20 x 20 x 1	(2) 20 x 20 x 1	(2) 20 x 20 x 1	(2) 20 x 25 x 1	(2) 20 x 25 x 1	(2) 20 x 25 x 1
All-aluminum coil	---	X	X	---	X	X
Drain Size (NPT)	¾"	¾"	¾"	¾"	¾"	¾"
Refrigerant Charge (oz.)	90	90	90	190	110	110
Condenser Fan / Coil						
Horsepower - RPM	¼ - 1075	¼ - 1075	¼ - 1075	¼ - 1075	¼ - 1075	¼ - 1075
RLA/LRA	1.4 / 2.9	1.4 / 2.9	1.4 / 2.9	1.4 / 2.9	1.4 / 2.9	1.4 / 2.9
Fan Diameter/ # Fan Blades	22 / 4	22 / 4	22 / 4	22 / 4	22 / 4	22 / 4
Face Area (ft^2)	19.5	19.5	19.5	19.1	17.0	17
Rows Deep/ Fins per Inch	1 / 28	1 / 28	1 / 28	2 / 16	2 /28	2 /28
Compressor						
Quantity / Type	1 / Scroll	1 / Scroll	1 / Scroll	1 / Scroll	1 / Scroll	1 / Scroll
Stage	Single	Single	Single	Single	Single	Single
Compressor RLA/LRA	19.9 / 109	19.9 / 109	19.9 / 109	26.4 / 134	26.4 / 134	26.4 / 134
Electrical Data						
Voltage-Phase	208/230-1	208/230-1	208/230-1	208/230-1	208/230-1	208/230-1
Indoor Blower FLA	2.9	2.9	2.9	2.9	2.9	2.9
Outdoor Fan RLA	1.4	1.4	1.4	1.4	1.4	1.4
Total Unit Amps	24.2	24.2	24.2	30.7	30.7	30.7
Min. Circuit Ampacity[1]	29.1	29.1	29.1	37.3	37.3	37.3
Max. Overcurrent Protection (amps)[2]	45	45	45	60	60	60
Ship Weight (lbs)	400	370	370	400	375	375
Operating Weight (lbs)	390	375	375	390	380	380

[1] Wire size should be determined in accordance with National Electrical Codes. Extensive wire runs will require larger wire sizes.

[2] May use fuses or HACR-type circuit breakers of the same size as noted.

Note: Always check the S&R plate for electrical data on the unit being installed.

Expanded Cooling Data — GPC1424H41**

			Outdoor Ambient Temperature																							
			65				75				85				95				105				115			
			Entering Indoor Wet Bulb Temperature																							
IDB	Airflow		59	63	67	71	59	63	67	71	59	63	67	71	59	63	67	71	59	63	67	71	59	63	67	71
70	920	MBh	24.1	25.0	27.4	-	23.5	24.4	26.7	-	23.0	23.8	26.1	-	22.4	23.2	25.5	-	21.3	22.1	24.2	-	19.7	20.5	22.4	-
		S/T	0.74	0.62	0.43	-	0.77	0.64	0.44	-	0.79	0.66	0.46	-	0.81	0.68	0.47	-	0.84	0.70	0.49	-	0.85	0.71	0.49	-
		Δ T	18	15	12	-	18	16	12	-	18	16	12	-	18	16	12	-	18	16	12	-	17	15	11	-
		kW	1.47	1.50	1.55	-	1.58	1.62	1.67	-	1.69	1.73	1.78	-	1.78	1.82	1.88	-	1.86	1.90	1.96	-	1.92	1.97	2.04	-
		Amps	6.6	6.7	6.9	-	7.0	7.2	7.4	-	7.6	7.7	8.0	-	8.0	8.2	8.4	-	8.5	8.7	8.9	-	8.9	9.1	9.4	-
		HI PR	223	240	253	-	250	269	284	-	284	306	323	-	323	348	368	-	364	392	414	-	402	433	457	-
		LO PR	110	117	128	-	117	124	135	-	121	129	141	-	127	135	148	-	133	142	155	-	138	147	160	-
	820	MBh	23.4	24.3	26.6	-	22.9	23.7	26.0	-	22.3	23.1	25.3	-	21.8	22.6	24.7	-	20.7	21.4	23.5	-	19.2	19.9	21.8	-
		S/T	0.71	0.59	0.41	-	0.73	0.61	0.42	-	0.75	0.63	0.43	-	0.77	0.65	0.45	-	0.80	0.67	0.47	-	0.81	0.68	0.47	-
		Δ T	19	16	12	-	19	16	12	-	19	16	12	-	19	16	12	-	19	16	12	-	17	15	11	-
		kW	1.45	1.49	1.53	-	1.57	1.61	1.66	-	1.67	1.71	1.77	-	1.76	1.80	1.87	-	1.84	1.88	1.95	-	1.91	1.95	2.02	-
		Amps	6.5	6.7	6.9	-	7.0	7.1	7.3	-	7.5	7.7	7.9	-	8.0	8.1	8.4	-	8.4	8.6	8.9	-	8.9	9.1	9.3	-
		HI PR	220	237	250	-	247	266	281	-	281	303	320	-	320	345	364	-	360	388	409	-	398	428	452	-
		LO PR	109	116	127	-	115	123	134	-	120	128	139	-	126	134	146	-	132	140	153	-	137	145	159	-
	720	MBh	21.6	22.4	24.5	-	21.1	21.9	24.0	-	20.6	21.3	23.4	-	20.1	20.8	22.8	-	19.1	19.8	21.7	-	17.7	18.3	20.1	-
		S/T	0.68	0.57	0.39	-	0.71	0.59	0.41	-	0.72	0.60	0.42	-	0.75	0.62	0.43	-	0.78	0.65	0.45	-	0.78	0.65	0.45	-
		Δ T	19	16	12	-	19	16	12	-	19	16	13	-	19	17	13	-	19	16	12	-	18	15	12	-
		kW	1.42	1.45	1.50	-	1.53	1.56	1.62	-	1.63	1.67	1.72	-	1.72	1.76	1.82	-	1.79	1.83	1.90	-	1.86	1.90	1.97	-
		Amps	6.4	6.5	6.7	-	6.8	7.0	7.2	-	7.3	7.5	7.7	-	7.8	7.9	8.2	-	8.2	8.4	8.6	-	8.6	8.8	9.1	-
		HI PR	214	230	243	-	240	258	273	-	273	294	310	-	311	334	353	-	350	376	397	-	386	416	439	-
		LO PR	106	113	123	-	112	119	130	-	116	124	135	-	122	130	142	-	128	136	149	-	132	141	154	-
75	920	MBh	24.5	25.2	27.3	29.3	23.9	24.7	26.7	28.6	23.4	24.1	26.0	28.0	22.8	23.5	25.4	27.3	21.7	22.3	24.1	25.9	20.1	20.7	22.4	24.0
		S/T	0.84	0.75	0.57	0.37	0.87	0.78	0.59	0.38	0.89	0.80	0.61	0.39	0.92	0.83	0.62	0.40	0.96	0.86	0.65	0.42	0.97	0.86	0.65	0.42
		Δ T	21	19	16	11	21	19	16	11	21	19	16	11	21	19	16	11	21	19	16	11	19	18	15	10
		kW	1.48	1.51	1.56	1.61	1.60	1.63	1.69	1.74	1.70	1.74	1.80	1.86	1.79	1.84	1.90	1.96	1.87	1.92	1.98	2.05	1.94	1.99	2.05	2.13
		Amps	6.6	6.8	7.0	7.2	7.1	7.2	7.5	7.7	7.6	7.8	8.0	8.3	8.1	8.3	8.5	8.8	8.6	8.7	9.0	9.3	9.0	9.2	9.5	9.8
		HI PR	225	242	255	266	252	271	287	299	287	309	326	340	327	352	371	387	368	396	418	436	406	437	462	481
		LO PR	111	119	129	138	118	125	137	146	122	130	142	151	129	137	149	159	135	143	156	167	139	148	162	172
	820	MBh	23.8	24.5	26.5	28.5	23.2	23.9	25.9	27.8	22.7	23.4	25.3	27.1	22.1	**22.8**	24.7	26.5	21.0	21.7	23.4	25.2	19.5	20.1	21.7	23.3
		S/T	0.80	0.72	0.54	0.35	0.83	0.74	0.56	0.36	0.85	0.76	0.58	0.37	0.88	**0.79**	0.60	0.38	0.91	0.82	0.62	0.40	0.92	0.82	0.62	0.40
		Δ T	21	20	16	11	22	20	16	11	22	20	16	11	22	**20**	16	11	22	20	16	11	20	19	15	10
		kW	1.47	1.50	1.55	1.60	1.58	1.62	1.67	1.73	1.69	1.73	1.78	1.85	1.78	**1.82**	1.88	1.95	1.86	1.90	1.96	2.03	1.92	1.97	2.04	2.11
		Amps	6.6	6.7	6.9	7.1	7.0	7.2	7.4	7.6	7.6	7.7	8.0	8.2	8.0	**8.2**	8.4	8.7	8.5	8.7	8.9	9.2	8.9	9.1	9.4	9.7
		HI PR	223	240	253	264	250	269	284	296	284	306	323	337	324	**348**	368	383	364	392	414	431	402	433	457	477
		LO PR	110	117	128	136	117	124	135	144	121	129	141	150	127	**135**	148	157	133	142	155	165	138	147	160	171
	720	MBh	22.0	22.6	24.5	26.3	21.5	22.1	23.9	25.7	20.9	21.6	23.3	25.1	20.4	21.0	22.8	24.4	19.4	20.0	21.6	23.2	18.0	18.5	20.0	21.5
		S/T	0.77	0.69	0.52	0.34	0.80	0.72	0.54	0.35	0.82	0.74	0.56	0.36	0.85	0.76	0.57	0.37	0.88	0.79	0.60	0.38	0.89	0.79	0.60	0.39
		Δ T	22	20	16	11	22	20	17	11	22	20	17	11	22	20	17	12	22	20	16	11	20	19	15	11
		kW	1.43	1.46	1.51	1.56	1.54	1.58	1.63	1.69	1.64	1.68	1.74	1.80	1.73	1.77	1.83	1.90	1.81	1.85	1.91	1.98	1.87	1.92	1.98	2.05
		Amps	6.4	6.6	6.7	7.0	6.9	7.0	7.2	7.5	7.4	7.5	7.8	8.0	7.8	8.0	8.2	8.5	8.3	8.5	8.7	9.0	8.7	8.9	9.2	9.5
		HI PR	216	232	245	256	242	261	275	287	276	297	313	327	314	338	357	372	353	380	401	418	390	420	443	462
		LO PR	107	114	124	132	113	120	131	140	118	125	136	145	123	131	143	153	129	138	150	160	134	142	155	166

IDB = Entering Indoor Dry Bulb Temperature

Shaded area reflects ACCA (TVA) conditions.

kW = total system power

High and low pressures are measured at the liquid and suction access fittings.

Amps: Unit amps (comp.+ evaporator + condenser fan motors)

Expanded Cooling Data — GPC1424H41** (cont.)

			Outdoor Ambient Temperature																							
			65				75				85				95				105				115			
			Entering Indoor Wet Bulb Temperature																							
IDB	Airflow		59	63	67	71	59	63	67	71	59	63	67	71	59	63	67	71	59	63	67	71	59	63	67	71
80	920	MBh	25.0	25.5	27.2	29.1	24.4	24.9	26.6	28.4	23.8	24.3	26.0	27.8	23.2	23.7	25.3	27.1	22.0	22.5	24.1	25.7	20.4	20.9	22.3	23.8
		S/T	0.92	0.87	0.70	0.53	0.96	0.90	0.73	0.55	1.00	0.92	0.75	0.56	1.00	0.95	0.77	0.58	1.00	1.00	0.80	0.60	1.00	1.00	0.81	0.60
		ΔT	23	22	19	15	23	22	19	16	24	22	19	16	23	23	20	16	22	23	19	15	20	21	18	14
		kW	1.49	1.52	1.57	1.63	1.61	1.65	1.70	1.76	1.72	1.76	1.81	1.88	1.81	1.85	1.91	1.98	1.89	1.93	2.00	2.07	1.96	2.00	2.07	2.15
		Amps	6.7	6.8	7.0	7.2	7.2	7.3	7.5	7.8	7.7	7.9	8.1	8.4	8.2	8.3	8.6	8.9	8.6	8.8	9.1	9.4	9.1	9.3	9.6	9.9
		HI PR	227	244	258	269	255	274	290	302	290	312	329	344	330	355	375	391	371	400	422	440	410	442	466	486
		LO PR	113	120	131	139	119	127	138	147	124	131	144	153	130	138	151	161	136	145	158	168	141	150	163	174
	820	MBh	24.2	24.8	26.4	28.3	23.7	24.2	25.8	27.6	23.1	23.6	25.2	27.0	22.5	23.0	**24.6**	26.3	21.4	21.9	23.4	25.0	19.8	20.3	21.6	23.1
		S/T	0.88	0.83	0.67	0.50	0.91	0.86	0.70	0.52	0.94	0.88	0.71	0.53	0.97	0.91	**0.74**	0.55	1.00	0.94	0.76	0.57	1.00	0.95	0.77	0.58
		ΔT	24	23	20	16	24	23	20	16	24	23	20	16	24	23	**20**	16	24	23	20	16	22	22	19	15
		kW	1.48	1.51	1.56	1.61	1.60	1.63	1.69	1.74	1.70	1.74	1.80	1.86	1.79	1.84	**1.90**	1.96	1.87	1.92	1.98	2.05	1.94	1.99	2.05	2.13
		Amps	6.6	6.8	7.0	7.2	7.1	7.2	7.5	7.7	7.6	7.8	8.0	8.3	8.1	8.3	**8.5**	8.8	8.6	8.7	9.0	9.3	9.0	9.2	9.5	9.8
		HI PR	225	242	256	267	252	272	287	299	287	309	326	340	327	352	**371**	387	368	396	418	436	406	437	462	482
		LO PR	111	119	129	138	118	125	137	146	122	130	142	151	129	137	**149**	159	135	143	156	167	139	148	162	172
	720	MBh	22.4	22.8	24.4	26.1	21.8	22.3	23.8	25.5	21.3	21.8	23.3	24.9	20.8	21.3	22.7	24.3	19.8	20.2	21.6	23.1	18.3	18.7	20.0	21.4
		S/T	0.85	0.80	0.65	0.48	0.88	0.82	0.67	0.50	0.90	0.85	0.69	0.51	0.93	0.87	0.71	0.53	0.97	0.91	0.74	0.55	0.97	0.91	0.74	0.56
		ΔT	24	23	20	16	25	24	20	16	25	24	20	16	25	24	21	16	24	23	20	16	23	22	19	15
		kW	1.44	1.47	1.52	1.57	1.56	1.59	1.64	1.70	1.66	1.70	1.75	1.81	1.75	1.79	1.85	1.91	1.82	1.87	1.93	2.00	1.89	1.93	2.00	2.07
		Amps	6.5	6.6	6.8	7.0	6.9	7.1	7.3	7.5	7.5	7.6	7.8	8.1	7.9	8.1	8.3	8.6	8.3	8.5	8.8	9.1	8.8	9.0	9.3	9.6
		HI PR	218	235	248	259	245	263	278	290	278	300	316	330	317	341	360	376	357	384	405	423	394	424	448	467
		LO PR	108	115	126	134	114	122	133	141	119	126	138	147	125	133	145	154	131	139	152	162	135	144	157	167
85	920	MBh	25.4	25.9	27.1	28.9	24.8	25.3	26.5	28.2	24.2	24.7	25.8	27.6	23.6	24.1	25.2	26.9	22.4	22.9	24.0	25.6	20.8	21.2	22.2	23.7
		S/T	0.97	0.93	0.84	0.68	1.00	0.97	0.87	0.71	1.00	0.99	0.90	0.73	1.00	1.00	0.92	0.75	1.00	1.00	0.96	0.78	1.00	1.00	0.97	0.78
		ΔT	25	24	23	20	25	24	23	20	24	24	23	20	24	24	23	20	22	23	23	20	21	21	21	19
		kW	1.50	1.54	1.59	1.64	1.62	1.66	1.72	1.77	1.73	1.77	1.83	1.89	1.83	1.87	1.93	2.00	1.91	1.95	2.02	2.09	1.97	2.02	2.09	2.16
		Amps	6.7	6.9	7.1	7.3	7.2	7.4	7.6	7.8	7.8	7.9	8.2	8.4	8.2	8.4	8.7	9.0	8.7	8.9	9.2	9.5	9.2	9.4	9.7	10.0
		HI PR	229	247	261	272	257	277	292	305	293	315	333	347	333	359	379	395	375	404	426	445	414	446	471	491
		LO PR	114	121	132	141	120	128	140	149	125	133	145	154	131	140	152	162	137	146	160	170	142	151	165	176
	820	MBh	24.6	25.1	26.3	28.1	24.1	24.5	25.7	27.4	23.5	24.0	25.1	26.8	22.9	23.4	24.5	26.1	21.8	22.2	23.3	24.8	20.2	20.6	21.5	23.0
		S/T	0.92	0.89	0.80	0.65	0.96	0.92	0.83	0.68	0.98	0.95	0.85	0.69	1.00	0.98	0.88	0.72	1.00	1.00	0.91	0.74	1.00	1.00	0.92	0.75
		ΔT	25	25	24	21	26	25	24	21	26	25	24	21	26	26	24	21	24	25	24	21	23	23	22	19
		kW	1.49	1.52	1.57	1.63	1.61	1.65	1.70	1.76	1.72	1.76	1.81	1.88	1.81	1.85	1.91	1.98	1.89	1.93	2.00	2.07	1.96	2.00	2.07	2.15
		Amps	6.7	6.8	7.0	7.2	7.2	7.3	7.5	7.8	7.7	7.9	8.1	8.4	8.2	8.3	8.6	8.9	8.6	8.8	9.1	9.4	9.1	9.3	9.6	9.9
		HI PR	227	244	258	269	255	274	290	302	290	312	329	344	330	355	375	391	371	400	422	440	410	442	466	486
		LO PR	113	120	131	139	119	127	138	147	124	131	144	153	130	138	151	161	136	145	158	168	141	150	163	174
	720	MBh	22.7	23.2	24.3	25.9	22.2	22.6	23.7	25.3	21.7	22.1	23.2	24.7	21.2	21.6	22.6	24.1	20.1	20.5	21.5	22.9	18.6	19.0	19.9	21.2
		S/T	0.89	0.86	0.77	0.63	0.92	0.89	0.80	0.65	0.95	0.91	0.82	0.67	0.98	0.94	0.85	0.69	1.00	0.98	0.88	0.72	1.00	0.99	0.89	0.72
		ΔT	26	25	24	21	26	26	24	21	26	26	24	21	26	26	25	21	26	26	24	21	24	24	23	20
		kW	1.45	1.49	1.53	1.59	1.57	1.60	1.66	1.71	1.67	1.71	1.77	1.83	1.76	1.80	1.86	1.93	1.84	1.88	1.95	2.01	1.91	1.95	2.02	2.09
		Amps	6.5	6.7	6.9	7.1	7.0	7.1	7.3	7.6	7.5	7.7	7.9	8.2	8.0	8.1	8.4	8.7	8.4	8.6	8.9	9.2	8.9	9.1	9.3	9.7
		HI PR	220	237	250	261	247	266	281	293	281	303	319	333	320	345	364	380	360	388	409	427	398	428	452	472
		LO PR	109	116	127	135	115	123	134	143	120	128	139	148	126	134	146	156	132	140	153	163	137	145	159	169

IDB = Entering Indoor Dry Bulb Temperature

Shaded area reflects AHRI (TVA) conditions.

kW = total system power

High and low pressures are measured at the liquid and suction access fittings.

Amps: Unit amps (comp.+ evaporator + condenser fan motors)

Expanded Cooling Data — GPC1430H41**

			Outdoor Ambient Temperature																							
			65				75				85				95				105				115			
			Entering Indoor Wet Bulb Temperature																							
IDB	Airflow		59	63	67	71	59	63	67	71	59	63	67	71	59	63	67	71	59	63	67	71	59	63	67	71
		MBh	27.8	28.8	31.6	-	27.2	28.2	30.9	-	26.5	27.5	30.1	-	25.9	26.8	29.4	-	24.6	25.5	27.9	-	22.8	23.6	25.9	-
		S/T	0.74	0.62	0.43	-	0.77	0.64	0.44	-	0.79	0.66	0.46	-	0.81	0.68	0.47	-	0.84	0.70	0.49	-	0.85	0.71	0.49	-
		Δ T	17	14	11	-	17	15	11	-	17	15	11	-	17	15	11	-	17	14	11	-	16	13	10	-
	1145	kW	1.75	1.78	1.84	-	1.89	1.93	1.99	-	2.01	2.05	2.12	-	2.12	2.16	2.24	-	2.21	2.26	2.34	-	2.29	2.34	2.42	-
		Amps	7.9	8.1	8.3	-	8.5	8.6	8.9	-	9.1	9.3	9.5	-	9.6	9.8	10.1	-	10.2	10.4	10.7	-	10.7	10.9	11.3	-
		HI PR	234	252	266	-	263	283	299	-	299	322	340	-	341	367	387	-	383	412	435	-	423	456	481	-
		LO PR	108	115	125	-	114	121	132	-	118	126	138	-	124	132	145	-	130	139	151	-	135	143	157	-
		MBh	27.0	28.0	30.7	-	26.4	27.4	30.0	-	25.8	26.7	29.3	-	25.1	26.1	28.5	-	23.9	24.7	27.1	-	22.1	22.9	25.1	-
		S/T	0.71	0.59	0.41	-	0.73	0.61	0.42	-	0.75	0.63	0.43	-	0.78	0.65	0.45	-	0.80	0.67	0.47	-	0.81	0.68	0.47	-
		Δ T	17	15	11	-	17	15	11	-	17	15	11	-	18	15	12	-	17	15	11	-	16	14	11	-
70	1020	kW	1.73	1.77	1.83	-	1.87	1.91	1.97	-	1.99	2.04	2.10	-	2.10	2.15	2.22	-	2.19	2.24	2.32	-	2.27	2.32	2.40	-
		Amps	7.9	8.0	8.2	-	8.4	8.6	8.8	-	9.0	9.2	9.5	-	9.5	9.8	10.0	-	10.1	10.3	10.6	-	10.6	10.8	11.2	-
		HI PR	232	250	264	-	260	280	296	-	296	319	336	-	337	363	383	-	379	408	431	-	419	451	476	-
		LO PR	107	114	124	-	113	120	131	-	117	125	136	-	123	131	143	-	129	137	150	-	134	142	155	-
		MBh	25.7	26.6	29.1	-	25.1	26.0	28.5	-	24.5	25.4	27.8	-	23.9	24.7	27.1	-	22.7	23.5	25.8	-	21.0	21.8	23.9	-
		S/T	0.68	0.57	0.39	-	0.70	0.59	0.41	-	0.72	0.60	0.42	-	0.74	0.62	0.43	-	0.77	0.64	0.45	-	0.78	0.65	0.45	-
		Δ T	18	15	12	-	18	16	12	-	18	16	12	-	18	16	12	-	18	15	12	-	17	14	11	-
	900	kW	1.70	1.74	1.80	-	1.84	1.88	1.94	-	1.96	2.00	2.07	-	2.06	2.11	2.18	-	2.15	2.20	2.28	-	2.23	2.28	2.36	-
		Amps	7.7	7.9	8.1	-	8.3	8.4	8.7	-	8.9	9.1	9.3	-	9.4	9.6	9.9	-	9.9	10.1	10.4	-	10.4	10.7	11.0	-
		HI PR	227	245	258	-	255	275	290	-	290	312	330	-	330	356	376	-	372	400	422	-	411	442	467	-
		LO PR	105	111	122	-	111	118	128	-	115	122	133	-	121	128	140	-	127	135	147	-	131	139	152	-
		MBh	28.3	29.1	31.5	33.9	27.6	28.5	30.8	33.1	27.0	27.8	30.1	32.3	26.3	27.1	29.3	31.5	25.0	25.8	27.9	29.9	23.2	23.9	25.8	27.7
		S/T	0.84	0.75	0.57	0.37	0.87	0.78	0.59	0.38	0.90	0.80	0.61	0.39	0.92	0.83	0.63	0.40	0.96	0.86	0.65	0.42	0.97	0.87	0.65	0.42
		Δ T	19	18	14	10	19	18	15	10	19	18	15	10	20	18	15	10	19	18	15	10	18	17	14	9
	1145	kW	1.76	1.80	1.86	1.92	1.90	1.94	2.01	2.08	2.03	2.07	2.14	2.21	2.14	2.18	2.26	2.34	2.23	2.28	2.36	2.44	2.31	2.36	2.44	2.53
		Amps	8.0	8.1	8.4	8.6	8.5	8.7	9.0	9.2	9.2	9.4	9.6	9.9	9.7	9.9	10.2	10.5	10.2	10.5	10.8	11.1	10.8	11.0	11.3	11.7
		HI PR	237	255	269	281	266	286	302	315	302	325	343	358	344	370	391	408	387	417	440	459	428	460	486	507
		LO PR	109	116	127	135	115	122	134	142	120	127	139	148	126	134	146	155	132	140	153	163	136	145	158	169
		MBh	27.5	28.3	30.6	32.9	26.8	27.6	29.9	32.1	26.2	27.0	29.2	31.3	25.6	**26.3**	28.5	30.6	24.3	25.0	27.1	29.0	22.5	23.2	25.1	26.9
		S/T	0.80	0.72	0.54	0.35	0.83	0.74	0.56	0.36	0.85	0.76	0.58	0.37	0.88	**0.79**	0.60	0.38	0.91	0.82	0.62	0.40	0.92	0.83	0.62	0.40
		Δ T	20	18	15	10	20	19	15	10	20	19	15	11	20	**19**	15	11	20	18	15	10	19	17	14	10
75	1020	kW	1.75	1.79	1.84	1.90	1.89	1.93	1.99	2.06	2.01	2.05	2.12	2.20	2.12	**2.17**	2.24	2.32	2.21	2.26	2.34	2.42	2.29	2.34	2.42	2.51
		Amps	7.9	8.1	8.3	8.6	8.5	8.6	8.9	9.2	9.1	9.3	9.5	9.9	9.6	**9.8**	10.1	10.5	10.2	10.4	10.7	11.0	10.7	10.9	11.3	11.6
		HI PR	234	252	266	278	263	283	299	312	299	322	340	354	341	**367**	387	404	383	412	435	454	423	456	481	502
		LO PR	108	115	125	133	114	121	132	141	118	126	138	147	124	**132**	145	154	130	139	151	161	135	144	157	167
		MBh	26.1	26.9	29.1	31.2	25.5	26.3	28.4	30.5	24.9	25.6	27.7	29.8	24.3	25.0	27.1	29.0	23.1	23.8	25.7	27.6	21.4	22.0	23.8	25.6
		S/T	0.77	0.69	0.52	0.34	0.80	0.71	0.54	0.35	0.82	0.73	0.55	0.36	0.84	0.76	0.57	0.37	0.88	0.78	0.59	0.38	0.88	0.79	0.60	0.38
		Δ T	21	19	15	11	21	19	16	11	21	19	16	11	21	19	16	11	21	19	16	11	19	18	15	10
	900	kW	1.72	1.76	1.81	1.87	1.85	1.90	1.96	2.02	1.97	2.02	2.09	2.16	2.08	2.13	2.20	2.28	2.17	2.22	2.30	2.38	2.25	2.30	2.38	2.46
		Amps	7.8	8.0	8.2	8.4	8.3	8.5	8.7	9.0	8.9	9.1	9.4	9.7	9.5	9.7	10.0	10.3	10.0	10.2	10.5	10.9	10.5	10.7	11.1	11.4
		HI PR	230	247	261	272	258	277	293	305	293	315	333	347	334	359	379	396	376	404	427	445	415	447	472	492
		LO PR	106	112	123	131	112	119	130	138	116	124	135	144	122	130	142	151	128	136	148	158	132	141	154	164

IDB = Entering Indoor Dry Bulb Temperature

Shaded area reflects ACCA (TVA) conditions.

kW = total system power

High and low pressures are measured at the liquid and suction access fittings.

Amps: Unit amps (comp.+ evaporator + condenser fan motors)

Expanded Cooling Data — GPC1430H41** (cont.)

			Outdoor Ambient Temperature																							
			65				75				85				95				105				115			
			Entering Indoor Wet Bulb Temperature																							
IDB	Airflow		59	63	67	71	59	63	67	71	59	63	67	71	59	63	67	71	59	63	67	71	59	63	67	71
80	1145	MBh	28.8	29.4	31.4	33.6	28.1	28.7	30.7	32.8	27.5	28.1	30.0	32.1	26.8	27.4	29.3	31.3	25.5	26.0	27.8	29.7	23.6	24.1	25.7	27.5
		S/T	0.92	0.87	0.71	0.53	0.96	0.90	0.73	0.55	1.00	0.92	0.75	0.56	1.00	0.95	0.77	0.58	1.00	1.00	0.80	0.60	1.00	1.00	0.81	0.61
		Δ T	21	20	18	14	22	21	18	14	22	21	18	14	22	21	18	15	20	21	18	14	19	19	17	13
		kW	1.78	1.81	1.87	1.94	1.92	1.96	2.03	2.09	2.04	2.09	2.16	2.23	2.15	2.20	2.28	2.36	2.25	2.30	2.38	2.46	2.33	2.38	2.46	2.55
		Amps	8.0	8.2	8.4	8.7	8.6	8.8	9.0	9.3	9.2	9.4	9.7	10.0	9.8	10.0	10.3	10.6	10.3	10.6	10.9	11.2	10.9	11.1	11.4	11.8
		HI PR	239	257	272	283	268	289	305	318	305	328	347	362	348	374	395	412	391	421	444	463	432	465	491	512
		LO PR	110	117	128	136	116	124	135	144	121	129	140	150	127	135	147	157	133	142	155	165	138	146	160	170
	1020	MBh	28.0	28.6	30.5	32.6	27.3	27.9	29.8	31.9	26.7	27.2	29.1	31.1	26.0	26.6	**28.4**	30.4	24.7	25.3	27.0	28.8	22.9	23.4	25.0	26.7
		S/T	0.88	0.83	0.67	0.50	0.91	0.86	0.70	0.52	0.94	0.88	0.71	0.53	0.97	0.91	**0.74**	0.55	1.00	0.94	0.77	0.57	1.00	0.95	0.77	0.58
		Δ T	22	21	19	15	22	22	19	15	23	22	19	15	23	22	**19**	15	22	21	19	15	21	20	17	14
		kW	1.76	1.80	1.86	1.92	1.90	1.94	2.01	2.08	2.03	2.07	2.14	2.21	2.14	2.18	**2.26**	2.34	2.23	2.28	2.36	2.44	2.31	2.36	2.44	2.53
		Amps	8.0	8.1	8.4	8.6	8.5	8.7	9.0	9.2	9.2	9.4	9.6	9.9	9.7	9.9	**10.2**	10.5	10.2	10.5	10.8	11.1	10.8	11.0	11.3	11.7
		HI PR	237	255	269	281	266	286	302	315	302	325	343	358	344	370	**391**	408	387	417	440	459	428	460	486	507
		LO PR	109	116	127	135	115	123	134	142	120	127	139	148	126	134	**146**	155	132	140	153	163	136	145	158	169
	900	MBh	26.6	27.1	29.0	31.0	25.9	26.5	28.3	30.3	25.3	25.9	27.7	29.6	24.7	25.3	27.0	28.8	23.5	24.0	25.6	27.4	21.7	22.2	23.7	25.4
		S/T	0.84	0.79	0.64	0.48	0.87	0.82	0.67	0.50	0.90	0.84	0.68	0.51	0.93	0.87	0.71	0.53	0.96	0.90	0.73	0.55	0.97	0.91	0.74	0.55
		Δ T	23	22	19	15	23	22	19	15	23	22	19	15	23	22	19	16	23	22	19	15	22	21	18	14
		kW	1.73	1.77	1.83	1.89	1.87	1.91	1.97	2.04	1.99	2.04	2.10	2.18	2.10	2.15	2.22	2.30	2.19	2.24	2.32	2.40	2.27	2.32	2.40	2.48
		Amps	7.9	8.0	8.2	8.5	8.4	8.6	8.8	9.1	9.0	9.2	9.5	9.8	9.5	9.8	10.0	10.4	10.1	10.3	10.6	11.0	10.6	10.8	11.2	11.5
		HI PR	232	250	264	275	260	280	296	309	296	319	336	351	337	363	383	400	379	408	431	450	419	451	476	497
		LO PR	107	114	124	132	113	120	131	140	117	125	136	145	123	131	143	152	129	137	150	160	134	142	155	165
85	1145	MBh	29.3	29.9	31.3	33.4	28.6	29.2	30.6	32.6	27.9	28.5	29.8	31.8	27.3	27.8	29.1	31.1	25.9	26.4	27.7	29.5	24.0	24.5	25.6	27.3
		S/T	0.97	0.93	0.84	0.68	1.00	0.97	0.87	0.71	1.00	0.99	0.90	0.73	1.00	1.00	0.93	0.75	1.00	1.00	0.96	0.78	1.00	1.00	0.97	0.79
		Δ T	23	22	21	18	23	23	21	19	22	23	21	19	22	22	22	19	21	21	21	18	19	20	20	17
		kW	1.79	1.83	1.89	1.95	1.93	1.98	2.04	2.11	2.06	2.11	2.18	2.25	2.17	2.22	2.30	2.38	2.27	2.32	2.40	2.48	2.35	2.40	2.49	2.57
		Amps	8.1	8.3	8.5	8.8	8.7	8.8	9.1	9.4	9.3	9.5	9.8	10.1	9.9	10.1	10.4	10.7	10.4	10.6	11.0	11.3	11.0	11.2	11.5	11.9
		HI PR	241	260	274	286	271	292	308	321	308	332	350	365	351	378	399	416	395	425	449	468	436	470	496	517
		LO PR	111	118	129	138	117	125	136	145	122	130	142	151	128	136	149	159	134	143	156	166	139	148	161	172
	1020	MBh	28.5	29.0	30.4	32.4	27.8	28.3	29.7	31.7	27.1	27.7	29.0	30.9	26.5	27.0	28.3	30.1	25.1	25.6	26.8	28.6	23.3	23.7	24.9	26.5
		S/T	0.92	0.89	0.80	0.65	0.96	0.92	0.83	0.68	0.98	0.95	0.86	0.69	1.00	0.98	0.88	0.72	1.00	1.00	0.92	0.74	1.00	1.00	0.92	0.75
		Δ T	24	23	22	19	24	24	22	19	24	24	22	19	24	24	22	19	23	23	22	19	21	21	21	18
		kW	1.78	1.81	1.87	1.94	1.92	1.96	2.03	2.09	2.04	2.09	2.16	2.23	2.15	2.20	2.28	2.36	2.25	2.30	2.38	2.46	2.33	2.38	2.46	2.55
		Amps	8.0	8.2	8.4	8.7	8.6	8.8	9.0	9.3	9.2	9.4	9.7	10.0	9.8	10.0	10.3	10.6	10.3	10.6	10.9	11.2	10.9	11.1	11.4	11.8
		HI PR	239	257	272	283	268	289	305	318	305	328	347	362	348	374	395	412	391	421	444	463	432	465	491	512
		LO PR	110	117	128	136	116	124	135	144	121	129	140	150	127	135	147	157	133	142	155	165	138	146	160	170
	900	MBh	27.0	27.6	28.9	30.8	26.4	26.9	28.2	30.1	25.8	26.3	27.5	29.4	25.1	25.6	26.8	28.6	23.9	24.4	25.5	27.2	22.1	22.6	23.6	25.2
		S/T	0.89	0.85	0.77	0.63	0.92	0.89	0.80	0.65	0.94	0.91	0.82	0.66	0.97	0.94	0.85	0.69	1.00	0.97	0.88	0.71	1.00	0.98	0.88	0.72
		Δ T	24	24	23	20	25	24	23	20	25	24	23	20	25	25	23	20	24	24	23	20	23	23	21	18
		kW	1.75	1.78	1.84	1.90	1.89	1.93	1.99	2.06	2.01	2.05	2.12	2.19	2.12	2.16	2.24	2.32	2.21	2.26	2.34	2.42	2.29	2.34	2.42	2.51
		Amps	7.9	8.1	8.3	8.6	8.5	8.6	8.9	9.2	9.1	9.3	9.5	9.9	9.6	9.8	10.1	10.5	10.2	10.4	10.7	11.0	10.7	10.9	11.3	11.6
		HI PR	234	252	266	278	263	283	299	312	299	322	340	354	341	367	387	404	383	412	435	454	423	456	481	502
		LO PR	108	115	125	133	114	121	132	141	118	126	138	147	124	132	145	154	130	139	151	161	135	143	157	167

IDB = Entering Indoor Dry Bulb Temperature

High and low pressures are measured at the liquid and suction access fittings.

Shaded area reflects AHRI (TVA) conditions.

kW = total system power

Amps: Unit amps (comp.+ evaporator + condenser fan motors)

Expanded Cooling Data — GPC1436H41**

			Outdoor Ambient Temperature																							
			65				75				85				95				105				115			
			Entering Indoor Wet Bulb Temperature																							
IDB	Airflow		59	63	67	71	59	63	67	71	59	63	67	71	59	63	67	71	59	63	67	71	59	63	67	71
70	1350	MBh	35.8	37.1	40.7	-	35.0	36.3	39.8	-	34.2	35.4	38.8	-	33.3	34.6	37.9	-	31.7	32.8	36.0	-	29.3	30.4	33.3	-
		S/T	0.74	0.62	0.43	-	0.77	0.64	0.45	-	0.79	0.66	0.46	-	0.82	0.68	0.47	-	0.85	0.71	0.49	-	0.85	0.71	0.49	-
		Δ T	18	16	12	-	18	16	12	-	18	16	12	-	19	16	12	-	18	16	12	-	17	15	11	-
		kW	2.37	2.42	2.50	-	2.56	2.61	2.70	-	2.72	2.78	2.87	-	2.86	2.93	3.02	-	2.98	3.05	3.15	-	3.09	3.16	3.26	-
		Amps	10.3	10.5	10.8	-	11.0	11.2	11.5	-	11.8	12.0	12.4	-	12.5	12.8	13.2	-	13.2	13.5	13.9	-	13.9	14.2	14.7	-
		HI PR	236	254	268	-	265	285	301	-	301	324	342	-	343	369	390	-	386	415	439	-	426	459	485	-
		LO PR	110	117	128	-	117	124	135	-	121	129	141	-	127	135	148	-	133	142	155	-	138	147	160	-
	1201	MBh	34.8	36.1	39.5	-	34.0	35.2	38.6	-	33.2	34.4	37.7	-	32.4	33.5	36.8	-	30.7	31.9	34.9	-	28.5	29.5	32.3	-
		S/T	0.71	0.59	0.41	-	0.73	0.61	0.43	-	0.75	0.63	0.44	-	0.78	0.65	0.45	-	0.81	0.67	0.47	-	0.81	0.68	0.47	-
		Δ T	19	16	12	-	19	17	13	-	19	17	13	-	19	17	13	-	19	16	12	-	18	15	12	-
		kW	2.35	2.40	2.48	-	2.54	2.59	2.67	-	2.70	2.76	2.85	-	2.84	2.90	3.00	-	2.96	3.02	3.13	-	3.06	3.13	3.24	-
		Amps	10.2	10.4	10.7	-	10.9	11.1	11.4	-	11.7	11.9	12.3	-	12.4	12.7	13.1	-	13.1	13.4	13.8	-	13.8	14.1	14.5	-
		HI PR	234	251	266	-	262	282	298	-	298	321	339	-	340	365	386	-	382	411	434	-	422	454	480	-
		LO PR	109	116	127	-	115	123	134	-	120	128	139	-	126	134	146	-	132	141	153	-	137	145	159	-
	1052	MBh	32.1	33.3	36.5	-	31.4	32.5	35.6	-	30.6	31.7	34.8	-	29.9	31.0	33.9	-	28.4	29.4	32.2	-	26.3	27.2	29.9	-
		S/T	0.68	0.57	0.40	-	0.71	0.59	0.41	-	0.73	0.61	0.42	-	0.75	0.63	0.43	-	0.78	0.65	0.45	-	0.78	0.66	0.45	-
		Δ T	19	17	13	-	19	17	13	-	19	17	13	-	20	17	13	-	19	17	13	-	18	16	12	-
		kW	2.30	2.35	2.42	-	2.47	2.53	2.61	-	2.63	2.69	2.77	-	2.77	2.83	2.92	-	2.88	2.95	3.05	-	2.98	3.05	3.15	-
		Amps	9.9	10.1	10.4	-	10.6	10.8	11.2	-	11.4	11.7	12.0	-	12.1	12.4	12.7	-	12.8	13.1	13.5	-	13.5	13.8	14.2	-
		HI PR	227	244	258	-	254	274	289	-	289	311	329	-	329	355	374	-	371	399	421	-	409	441	465	-
		LO PR	106	113	123	-	112	119	130	-	116	124	135	-	122	130	142	-	128	136	149	-	133	141	154	-
75	1350	MBh	36.4	37.5	40.6	43.6	35.6	36.7	39.7	42.6	34.7	35.8	38.7	41.6	33.9	**34.9**	37.8	40.6	32.2	33.2	35.9	38.5	29.8	30.7	33.2	35.7
		S/T	0.84	0.76	0.57	0.37	0.88	0.78	0.59	0.38	0.90	0.80	0.61	0.39	0.93	**0.83**	0.63	0.40	0.96	0.86	0.65	0.42	0.97	0.87	0.66	0.42
		Δ T	21	19	16	11	21	20	16	11	21	20	16	11	21	**20**	16	11	21	19	16	11	20	18	15	10
		kW	2.39	2.44	2.52	2.60	2.58	2.63	2.72	2.81	2.74	2.80	2.89	2.99	2.89	**2.95**	3.05	3.15	3.01	3.08	3.18	3.29	3.12	3.19	3.29	3.41
		Amps	10.3	10.5	10.8	11.2	11.1	11.3	11.6	12.0	11.9	12.1	12.5	12.9	12.6	**12.9**	13.3	13.7	13.3	13.6	14.0	14.5	14.0	14.4	14.8	15.3
		HI PR	238	257	271	283	268	288	304	317	304	327	346	361	347	**373**	394	411	390	420	443	462	431	464	489	510
		LO PR	111	119	129	138	118	125	137	146	122	130	142	151	129	**137**	149	159	135	143	157	167	139	148	162	172
	1201	MBh	35.4	36.4	39.4	42.3	34.6	35.6	38.5	41.3	33.7	34.7	37.6	40.4	32.9	**33.9**	36.7	39.4	31.3	32.2	34.8	37.4	29.0	29.8	32.3	34.6
		S/T	0.81	0.72	0.55	0.35	0.84	0.75	0.57	0.36	0.86	0.77	0.58	0.37	0.88	**0.79**	0.60	0.38	0.92	0.82	0.62	0.40	0.93	0.83	0.63	0.40
		Δ T	22	20	16	11	22	20	17	12	22	20	17	12	22	**21**	17	12	22	20	17	11	21	19	15	11
		kW	2.37	2.42	2.50	2.58	2.56	2.61	2.70	2.79	2.72	2.78	2.87	2.97	2.86	**2.93**	3.02	3.12	2.98	3.05	3.15	3.26	3.09	3.16	3.27	3.38
		Amps	10.3	10.5	10.8	11.1	11.0	11.2	11.5	11.9	11.8	12.0	12.4	12.8	12.5	**12.8**	13.2	13.6	13.2	13.5	13.9	14.4	13.9	14.2	14.7	15.2
		HI PR	236	254	268	280	265	285	301	314	301	324	342	357	343	**369**	390	407	386	415	439	457	426	459	485	505
		LO PR	110	117	128	137	117	124	135	144	121	129	141	150	127	**135**	148	157	133	142	155	165	138	147	160	171
	1052	MBh	32.7	33.6	36.4	39.1	31.9	32.8	35.6	38.2	31.1	32.1	34.7	37.2	30.4	**31.3**	33.9	36.3	28.9	29.7	32.2	34.5	26.7	27.5	29.8	32.0
		S/T	0.78	0.69	0.53	0.34	0.81	0.72	0.55	0.35	0.83	0.74	0.56	0.36	0.85	**0.76**	0.58	0.37	0.88	0.79	0.60	0.39	0.89	0.80	0.60	0.39
		Δ T	22	20	17	12	22	21	17	12	22	21	17	12	23	**21**	17	12	22	21	17	12	21	19	16	11
		kW	2.32	2.36	2.44	2.52	2.49	2.55	2.63	2.72	2.65	2.71	2.80	2.89	2.79	**2.85**	2.95	3.05	2.91	2.97	3.07	3.18	3.01	3.08	3.18	3.29
		Amps	10.0	10.2	10.5	10.8	10.7	10.9	11.2	11.6	11.5	11.8	12.1	12.5	12.2	**12.5**	12.8	13.3	12.9	13.2	13.6	14.0	13.6	13.9	14.3	14.8
		HI PR	229	246	260	271	257	276	292	304	292	314	332	346	333	**358**	378	394	374	403	425	444	414	445	470	490
		LO PR	107	114	124	132	113	120	131	140	118	125	137	145	123	**131**	143	153	129	138	150	160	134	142	155	166

IDB = Entering Indoor Dry Bulb Temperature

Shaded area reflects ACCA (TVA) conditions.

kW = total system power

High and low pressures are measured at the liquid and suction access fittings.

Amps: Unit amps (comp.+ evaporator + condenser fan motors)

Expanded Cooling Data — GPC1436H41** (cont.)

			Outdoor Ambient Temperature																							
			65				75				85				95				105				115			
			Entering Indoor Wet Bulb Temperature																							
IDB	Airflow		59	63	67	71	59	63	67	71	59	63	67	71	59	63	67	71	59	63	67	71	59	63	67	71
80	1350	MBh	37.1	37.9	40.5	43.3	36.2	37.0	39.6	42.3	35.4	36.1	38.6	41.3	34.5	35.3	37.7	40.3	32.8	33.5	35.8	38.3	30.4	31.0	33.1	35.4
		S/T	0.93	0.87	0.71	0.53	0.96	0.90	0.73	0.55	1.00	0.92	0.75	0.56	1.00	0.95	0.78	0.58	1.00	1.00	0.81	0.60	1.00	1.00	0.81	0.61
		Δ T	23	22	20	16	24	23	20	16	24	23	20	16	24	23	20	16	22	23	20	16	21	21	18	15
		kW	2.41	2.46	2.54	2.62	2.60	2.65	2.74	2.83	2.76	2.83	2.92	3.02	2.91	2.98	3.07	3.18	3.03	3.10	3.21	3.32	3.14	3.21	3.32	3.44
		Amps	10.4	10.6	10.9	11.3	11.1	11.4	11.7	12.1	12.0	12.2	12.6	13.0	12.7	13.0	13.4	13.8	13.4	13.7	14.2	14.6	14.2	14.5	14.9	15.4
		HI PR	241	259	274	285	270	291	307	320	307	331	349	364	350	377	398	415	394	424	447	467	435	468	494	516
		LO PR	113	120	131	139	119	127	138	147	124	132	144	153	130	138	151	161	136	145	158	168	141	150	164	174
	1201	MBh	36.0	36.8	39.3	42.0	35.2	35.9	38.4	41.1	34.3	35.1	37.5	40.1	33.5	34.2	**36.6**	39.1	31.8	32.5	34.7	37.1	29.5	30.1	32.2	34.4
		S/T	0.88	0.83	0.67	0.50	0.92	0.86	0.70	0.52	0.94	0.88	0.72	0.54	0.97	0.91	**0.74**	0.55	1.00	0.94	0.77	0.57	1.00	0.95	0.77	0.58
		Δ T	24	23	20	16	25	24	21	16	25	24	21	16	25	24	**21**	17	24	23	20	16	23	22	19	15
		kW	2.39	2.44	2.52	2.60	2.58	2.63	2.72	2.81	2.74	2.80	2.89	2.99	2.89	2.95	**3.05**	3.15	3.01	3.08	3.18	3.29	3.12	3.19	3.29	3.41
		Amps	10.3	10.6	10.8	11.2	11.1	11.3	11.6	12.0	11.9	12.1	12.5	12.9	12.6	12.9	**13.3**	13.7	13.3	13.6	14.0	14.5	14.0	14.4	14.8	15.3
		HI PR	238	257	271	283	268	288	304	317	304	327	346	361	347	373	**394**	411	390	420	443	462	431	464	489	511
		LO PR	111	119	129	138	118	125	137	146	122	130	142	151	129	137	**149**	159	135	143	157	167	139	148	162	172
	1052	MBh	33.2	34.0	36.3	38.8	32.5	33.2	35.4	37.9	31.7	32.4	34.6	37.0	30.9	31.6	33.8	36.1	29.4	30.0	32.1	34.3	27.2	27.8	29.7	31.8
		S/T	0.85	0.80	0.65	0.49	0.88	0.83	0.67	0.50	0.91	0.85	0.69	0.52	0.93	0.88	0.71	0.53	0.97	0.91	0.74	0.55	0.98	0.92	0.75	0.56
		Δ T	25	24	21	16	25	24	21	17	25	24	21	17	25	24	21	17	25	24	21	17	23	22	19	15
		kW	2.33	2.38	2.46	2.54	2.51	2.57	2.65	2.74	2.67	2.73	2.82	2.92	2.81	2.88	2.97	3.07	2.93	3.00	3.10	3.20	3.04	3.10	3.21	3.32
		Amps	10.1	10.3	10.6	10.9	10.8	11.0	11.3	11.7	11.6	11.9	12.2	12.6	12.3	12.6	12.9	13.4	13.0	13.3	13.7	14.2	13.7	14.0	14.4	14.9
		HI PR	231	249	263	274	260	279	295	308	295	318	335	350	336	362	382	398	378	407	430	448	418	450	475	495
		LO PR	108	115	126	134	114	122	133	141	119	126	138	147	125	133	145	154	131	139	152	162	135	144	157	167
85	1350	MBh	37.7	38.5	40.3	43.0	36.9	37.6	39.4	42.0	36.0	36.7	38.4	41.0	35.1	35.8	37.5	40.0	33.4	34.0	35.6	38.0	30.9	31.5	33.0	35.2
		S/T	0.97	0.94	0.85	0.69	1.00	0.97	0.88	0.71	1.00	1.00	0.90	0.73	1.00	1.00	0.93	0.75	1.00	1.00	0.96	0.78	1.00	1.00	0.97	0.79
		Δ T	25	25	23	20	25	25	24	20	25	25	24	20	24	24	24	21	23	23	23	20	21	21	22	19
		kW	2.43	2.48	2.56	2.65	2.62	2.68	2.76	2.86	2.79	2.85	2.94	3.04	2.93	3.00	3.10	3.21	3.06	3.13	3.23	3.34	3.17	3.24	3.35	3.47
		Amps	10.5	10.7	11.0	11.4	11.2	11.5	11.8	12.2	12.1	12.3	12.7	13.1	12.8	13.1	13.5	13.9	13.6	13.9	14.3	14.8	14.3	14.6	15.0	15.6
		HI PR	243	262	276	288	273	294	310	323	310	334	353	368	354	380	402	419	398	428	452	471	439	473	499	521
		LO PR	114	121	132	141	120	128	140	149	125	133	145	154	131	140	152	162	137	146	160	170	142	151	165	176
	1201	MBh	36.6	37.4	39.1	41.7	35.8	36.5	38.2	40.8	34.9	35.6	37.3	39.8	34.1	34.7	36.4	38.8	32.4	33.0	34.6	36.9	30.0	30.6	32.0	34.2
		S/T	0.93	0.89	0.81	0.65	0.96	0.93	0.84	0.68	0.98	0.95	0.86	0.70	1.00	0.98	0.89	0.72	1.00	1.00	0.92	0.75	1.00	1.00	0.93	0.75
		Δ T	26	26	24	21	26	26	24	21	26	26	24	21	26	26	25	21	25	25	24	21	23	23	23	20
		kW	2.41	2.46	2.54	2.62	2.60	2.65	2.74	2.83	2.76	2.83	2.92	3.02	2.91	2.98	3.07	3.18	3.03	3.10	3.21	3.32	3.14	3.21	3.32	3.44
		Amps	10.4	10.6	10.9	11.3	11.1	11.4	11.7	12.1	12.0	12.2	12.6	13.0	12.7	13.0	13.4	13.8	13.4	13.7	14.2	14.6	14.2	14.5	14.9	15.4
		HI PR	241	259	274	285	270	291	307	320	307	331	349	364	350	377	398	415	394	424	447	467	435	468	494	516
		LO PR	113	120	131	139	119	127	138	147	124	132	144	153	130	138	151	161	136	145	158	168	141	150	164	174
	1052	MBh	33.8	34.5	36.1	38.5	33.0	33.7	35.3	37.6	32.2	32.9	34.4	36.7	31.5	32.1	33.6	35.8	29.9	30.5	31.9	34.0	27.7	28.2	29.6	31.5
		S/T	0.89	0.86	0.78	0.63	0.93	0.89	0.81	0.65	0.95	0.92	0.83	0.67	0.98	0.95	0.85	0.69	1.00	0.98	0.89	0.72	1.00	0.99	0.89	0.72
		Δ T	26	26	25	21	27	26	25	21	27	26	25	22	27	26	25	22	26	26	25	21	24	24	23	20
		kW	2.35	2.40	2.48	2.56	2.53	2.59	2.67	2.76	2.70	2.75	2.84	2.94	2.84	2.90	3.00	3.10	2.96	3.02	3.12	3.23	3.06	3.13	3.24	3.35
		Amps	10.2	10.4	10.7	11.0	10.9	11.1	11.4	11.8	11.7	11.9	12.3	12.7	12.4	12.7	13.0	13.5	13.1	13.4	13.8	14.3	13.8	14.1	14.5	15.0
		HI PR	234	251	265	277	262	282	298	311	298	321	339	353	340	365	386	402	382	411	434	453	422	454	480	500
		LO PR	109	116	127	135	115	123	134	143	120	128	139	148	126	134	146	156	132	140	153	163	137	145	159	169

IDB = Entering Indoor Dry Bulb Temperature

Shaded area reflects AHRI (TVA) conditions.

kW = total system power

High and low pressures are measured at the liquid and suction access fittings.

Amps: Unit amps (comp.+ evaporator + condenser fan motors)

Expanded Cooling Data — GPC1442H41**

			Outdoor Ambient Temperature																							
			65				75				85				95				105				115			
			Entering Indoor Wet Bulb Temperature																							
IDB	Airflow		59	63	67	71	59	63	67	71	59	63	67	71	59	63	67	71	59	63	67	71	59	63	67	71
70	1432	MBh	39.8	41.3	45.2	-	38.9	40.3	44.1	-	38.0	39.3	43.1	-	37.0	38.4	42.0	-	35.2	36.5	39.9	-	32.6	33.8	37.0	-
		S/T	0.72	0.60	0.42	-	0.75	0.63	0.43	-	0.77	0.64	0.44	-	0.79	0.66	0.46	-	0.82	0.69	0.48	-	0.83	0.69	0.48	-
		Δ T	18	16	12	-	19	16	12	-	19	16	12	-	19	16	12	-	19	16	12	-	17	15	11	-
		kW	2.68	2.74	2.82	-	2.89	2.95	3.04	-	3.07	3.14	3.24	-	3.23	3.30	3.41	-	3.37	3.44	3.56	-	3.48	3.56	3.68	-
		Amps	11.4	11.7	12.0	-	12.3	12.6	13.0	-	13.3	13.6	14.0	-	14.2	14.5	15.0	-	15.1	15.4	15.9	-	15.9	16.3	16.8	-
		HI PR	241	260	274	-	271	291	308	-	308	331	350	-	351	377	399	-	395	425	448	-	436	469	495	-
		LO PR	109	116	127	-	115	122	134	-	120	127	139	-	126	134	146	-	132	140	153	-	136	145	158	-
	1274	MBh	38.6	40.1	43.9	-	37.7	39.1	42.9	-	36.8	38.2	41.8	-	35.9	37.3	40.8	-	34.1	35.4	38.8	-	31.6	32.8	35.9	-
		S/T	0.69	0.58	0.40	-	0.71	0.60	0.41	-	0.73	0.61	0.42	-	0.76	0.63	0.44	-	0.78	0.65	0.45	-	0.79	0.66	0.46	-
		Δ T	19	17	13	-	19	17	13	-	19	17	13	-	20	17	13	-	19	17	13	-	18	16	12	-
		kW	2.66	2.72	2.80	-	2.86	2.92	3.02	-	3.04	3.11	3.21	-	3.20	3.27	3.38	-	3.34	3.41	3.53	-	3.45	3.53	3.65	-
		Amps	11.3	11.6	11.9	-	12.2	12.5	12.9	-	13.2	13.5	13.9	-	14.1	14.4	14.8	-	14.9	15.3	15.8	-	15.8	16.1	16.7	-
		HI PR	239	257	272	-	268	289	305	-	305	328	346	-	347	374	395	-	391	420	444	-	432	465	491	-
		LO PR	108	115	125	-	114	121	132	-	118	126	138	-	124	132	145	-	130	139	151	-	135	144	157	-
	1116	MBh	35.7	37.0	40.5	-	34.8	36.1	39.6	-	34.0	35.2	38.6	-	33.2	34.4	37.7	-	31.5	32.7	35.8	-	29.2	30.3	33.2	-
		S/T	0.66	0.55	0.38	-	0.69	0.57	0.40	-	0.71	0.59	0.41	-	0.73	0.61	0.42	-	0.76	0.63	0.44	-	0.76	0.64	0.44	-
		Δ T	20	17	13	-	20	17	13	-	20	17	13	-	20	17	13	-	20	17	13	-	18	16	12	-
		kW	2.60	2.65	2.73	-	2.79	2.85	2.94	-	2.97	3.03	3.13	-	3.12	3.19	3.30	-	3.25	3.33	3.44	-	3.37	3.44	3.56	-
		Amps	11.0	11.3	11.6	-	11.9	12.2	12.5	-	12.8	13.1	13.6	-	13.7	14.0	14.4	-	14.5	14.9	15.3	-	15.3	15.7	16.2	-
		HI PR	232	249	263	-	260	280	296	-	296	318	336	-	337	363	383	-	379	408	431	-	419	451	476	-
		LO PR	105	111	122	-	111	118	128	-	115	122	133	-	121	128	140	-	127	135	147	-	131	139	152	-
75	1432	MBh	40.5	41.7	45.1	48.4	39.5	40.7	44.1	47.3	38.6	39.7	43.0	46.2	37.7	**38.8**	42.0	45.0	35.8	36.8	39.9	42.8	33.1	34.1	36.9	39.6
		S/T	0.82	0.73	0.56	0.36	0.85	0.76	0.58	0.37	0.87	0.78	0.59	0.38	0.90	**0.81**	0.61	0.39	0.93	0.84	0.63	0.41	0.94	0.84	0.64	0.41
		Δ T	21	20	16	11	22	20	16	11	22	20	16	11	22	**20**	16	11	21	20	16	11	20	18	15	10
		kW	2.70	2.76	2.85	2.94	2.91	2.97	3.07	3.17	3.09	3.16	3.27	3.37	3.26	**3.33**	3.44	3.55	3.39	3.47	3.59	3.71	3.51	3.59	3.71	3.84
		Amps	11.5	11.8	12.2	12.6	12.4	12.7	13.1	13.6	13.4	13.7	14.2	14.7	14.3	**14.6**	15.1	15.7	15.2	15.5	16.0	16.6	16.1	16.4	17.0	17.6
		HI PR	244	262	277	289	274	294	311	324	311	335	354	369	354	**381**	403	420	399	429	453	472	440	474	501	522
		LO PR	110	117	128	136	116	124	135	144	121	129	140	150	127	**135**	147	157	133	142	155	165	138	146	160	170
	1274	MBh	39.3	40.5	43.8	47.0	38.4	39.5	42.8	45.9	37.5	38.6	41.8	44.8	36.6	**37.6**	40.7	43.7	34.7	35.8	38.7	41.5	32.2	33.1	35.9	38.5
		S/T	0.78	0.70	0.53	0.34	0.81	0.73	0.55	0.35	0.83	0.74	0.56	0.36	0.86	**0.77**	0.58	0.37	0.89	0.80	0.60	0.39	0.90	0.80	0.61	0.39
		Δ T	22	20	17	12	22	21	17	12	22	21	17	12	23	**21**	17	12	22	21	17	12	21	19	16	11
		kW	2.68	2.74	2.82	2.91	2.89	2.95	3.04	3.14	3.07	3.14	3.24	3.35	3.23	**3.30**	3.41	3.52	3.37	3.44	3.56	3.68	3.48	3.56	3.68	3.81
		Amps	11.4	11.7	12.0	12.5	12.3	12.6	13.0	13.4	13.3	13.6	14.0	14.6	14.2	**14.5**	15.0	15.5	15.1	15.4	15.9	16.5	15.9	16.3	16.8	17.4
		HI PR	241	260	274	286	271	291	308	321	308	331	350	365	351	**378**	399	416	395	425	449	468	436	469	496	517
		LO PR	109	116	127	135	115	123	134	142	120	127	139	148	126	**134**	146	156	132	140	153	163	136	145	158	169
	1116	MBh	36.3	37.3	40.4	43.4	35.4	36.5	39.5	42.4	34.6	35.6	38.5	41.4	33.7	**34.7**	37.6	40.4	32.1	33.0	35.7	38.3	29.7	30.6	33.1	35.5
		S/T	0.75	0.68	0.51	0.33	0.78	0.70	0.53	0.34	0.80	0.72	0.54	0.35	0.83	**0.74**	0.56	0.36	0.86	0.77	0.58	0.37	0.87	0.78	0.59	0.38
		Δ T	23	21	17	12	23	21	17	12	23	21	17	12	23	**21**	17	12	23	21	17	12	21	20	16	11
		kW	2.62	2.67	2.76	2.84	2.82	2.88	2.97	3.07	2.99	3.06	3.16	3.26	3.15	**3.22**	3.32	3.44	3.28	3.35	3.47	3.58	3.40	3.47	3.59	3.71
		Amps	11.1	11.4	11.7	12.1	12.0	12.3	12.6	13.1	13.0	13.3	13.7	14.2	13.8	**14.1**	14.6	15.1	14.7	15.0	15.5	16.0	15.5	15.9	16.4	17.0
		HI PR	234	252	266	277	263	283	299	311	299	322	340	354	340	**366**	387	403	383	412	435	454	423	455	481	501
		LO PR	106	112	123	131	112	119	130	138	116	124	135	144	122	**130**	142	151	128	136	148	158	132	141	154	164

IDB = Entering Indoor Dry Bulb Temperature

High and low pressures are measured at the liquid and suction access fittings.

Shaded area reflects ACCA (TVA) conditions.

kW = total system power

Amps: Unit amps (comp.+ evaporator + condenser fan motors)

Expanded Cooling Data — GPC1442H41** (cont.)

			Outdoor Ambient Temperature																							
			65				75				85				95				105				115			
			Entering Indoor Wet Bulb Temperature																							
IDB	Airflow		59	63	67	71	59	63	67	71	59	63	67	71	59	63	67	71	59	63	67	71	59	63	67	71
80	1432	MBh	41.2	42.1	45.0	48.1	40.2	41.1	43.9	47.0	39.3	40.1	42.9	45.8	38.3	39.2	41.8	44.7	36.4	37.2	39.7	42.5	33.7	34.5	36.8	39.4
		S/T	0.90	0.84	0.69	0.51	0.93	0.88	0.71	0.53	0.96	0.90	0.73	0.55	1.00	0.93	0.75	0.56	1.00	0.96	0.78	0.58	1.00	0.97	0.79	0.59
		Δ T	24	23	20	16	24	23	20	16	24	23	20	16	25	23	20	16	23	23	20	16	22	21	19	15
		kW	2.72	2.78	2.87	2.96	2.93	3.00	3.09	3.20	3.12	3.19	3.29	3.40	3.28	3.36	3.47	3.58	3.42	3.50	3.62	3.74	3.54	3.62	3.75	3.87
		Amps	11.6	11.9	12.3	12.7	12.5	12.8	13.2	13.7	13.5	13.9	14.3	14.8	14.4	14.8	15.2	15.8	15.3	15.7	16.2	16.8	16.2	16.6	17.1	17.8
		HI PR	246	265	280	292	276	297	314	327	314	338	357	372	358	385	407	424	403	433	458	477	445	479	506	527
		LO PR	111	118	129	138	117	125	136	145	122	130	142	151	128	136	149	159	134	143	156	166	139	148	161	172
	1274	MBh	40.0	40.9	43.7	46.7	39.1	39.9	42.6	45.6	38.1	39.0	41.6	44.5	37.2	38.0	**40.6**	43.4	35.3	36.1	38.6	41.2	32.7	33.5	35.7	38.2
		S/T	0.86	0.81	0.66	0.49	0.89	0.83	0.68	0.51	0.91	0.86	0.70	0.52	0.94	0.88	**0.72**	0.54	0.98	0.92	0.75	0.56	0.99	0.92	0.75	0.56
		Δ T	25	24	21	17	25	24	21	17	25	24	21	17	25	24	**21**	17	25	24	21	17	23	22	19	16
		kW	2.70	2.76	2.85	2.94	2.91	2.97	3.07	3.17	3.09	3.16	3.27	3.37	3.26	3.33	**3.44**	3.55	3.40	3.47	3.59	3.71	3.51	3.59	3.71	3.84
		Amps	11.5	11.8	12.2	12.6	12.4	12.7	13.1	13.6	13.4	13.7	14.2	14.7	14.3	14.6	**15.1**	15.7	15.2	15.5	16.0	16.6	16.1	16.4	17.0	17.6
		HI PR	244	262	277	289	274	294	311	324	311	335	354	369	354	381	**403**	420	399	429	453	473	440	474	501	522
		LO PR	110	117	128	136	116	124	135	144	121	129	140	150	127	135	**148**	157	133	142	155	165	138	146	160	170
	1116	MBh	36.9	37.7	40.3	43.1	36.1	36.8	39.4	42.1	35.2	36.0	38.4	41.1	34.3	35.1	37.5	40.1	32.6	33.3	35.6	38.1	30.2	30.9	33.0	35.3
		S/T	0.83	0.78	0.63	0.47	0.86	0.80	0.66	0.49	0.88	0.83	0.67	0.50	0.91	0.85	0.69	0.52	0.94	0.88	0.72	0.54	0.95	0.89	0.73	0.54
		Δ T	25	24	21	17	25	24	21	17	26	24	21	17	26	25	21	17	25	24	21	17	24	23	20	16
		kW	2.64	2.69	2.78	2.87	2.84	2.90	2.99	3.09	3.02	3.08	3.18	3.29	3.18	3.25	3.35	3.46	3.31	3.38	3.50	3.61	3.43	3.50	3.62	3.74
		Amps	11.2	11.5	11.8	12.3	12.1	12.4	12.7	13.2	13.1	13.4	13.8	14.3	13.9	14.3	14.7	15.2	14.8	15.1	15.6	16.2	15.6	16.0	16.5	17.1
		HI PR	236	255	269	280	265	286	302	315	302	325	343	358	344	370	391	407	387	416	439	458	427	460	486	506
		LO PR	107	114	124	132	113	120	131	140	117	125	136	145	123	131	143	152	129	137	150	160	134	142	155	165
85	1432	MBh	41.9	42.7	44.7	47.7	40.9	41.7	43.7	46.6	40.0	40.7	42.7	45.5	39.0	39.7	41.6	44.4	37.0	37.8	39.5	42.2	34.3	35.0	36.6	39.1
		S/T	0.94	0.91	0.82	0.67	0.98	0.94	0.85	0.69	1.00	0.97	0.87	0.71	1.00	1.00	0.90	0.73	1.00	1.00	0.94	0.76	1.00	1.00	0.94	0.77
		Δ T	25	25	24	20	26	25	24	21	26	25	24	21	25	25	24	21	24	24	24	21	22	22	22	19
		kW	2.75	2.80	2.89	2.99	2.96	3.02	3.12	3.22	3.15	3.21	3.32	3.43	3.31	3.39	3.50	3.62	3.45	3.53	3.65	3.77	3.57	3.65	3.78	3.91
		Amps	11.7	12.0	12.4	12.8	12.6	12.9	13.3	13.8	13.7	14.0	14.4	14.9	14.6	14.9	15.4	15.9	15.5	15.8	16.3	16.9	16.3	16.7	17.3	17.9
		HI PR	249	268	283	295	279	300	317	331	317	342	361	376	361	389	411	428	407	438	462	482	449	484	511	533
		LO PR	112	119	130	139	119	126	138	147	123	131	143	153	130	138	150	160	136	144	158	168	140	149	163	174
	1274	MBh	40.7	41.5	43.4	46.3	39.7	40.5	42.4	45.3	38.8	39.6	41.4	44.2	37.9	38.6	40.4	43.1	36.0	36.7	38.4	41.0	33.3	34.0	35.6	37.9
		S/T	0.90	0.87	0.78	0.64	0.93	0.90	0.81	0.66	0.96	0.92	0.83	0.68	0.99	0.95	0.86	0.70	1.00	0.99	0.89	0.72	1.00	1.00	0.90	0.73
		Δ T	26	26	25	21	27	26	25	22	27	26	25	22	27	27	25	22	26	26	25	21	24	24	23	20
		kW	2.72	2.78	2.87	2.96	2.93	3.00	3.09	3.20	3.12	3.19	3.29	3.40	3.28	3.36	3.47	3.58	3.42	3.50	3.62	3.74	3.54	3.62	3.75	3.87
		Amps	11.6	11.9	12.3	12.7	12.5	12.8	13.2	13.7	13.5	13.9	14.3	14.8	14.4	14.8	15.2	15.8	15.3	15.7	16.2	16.8	16.2	16.6	17.1	17.8
		HI PR	246	265	280	292	276	297	314	327	314	338	357	372	358	385	407	424	403	433	458	477	445	479	506	527
		LO PR	111	118	129	138	117	125	136	145	122	130	142	151	128	136	149	159	134	143	156	166	139	148	161	172
	1116	MBh	37.6	38.3	40.1	42.8	36.7	37.4	39.2	41.8	35.8	36.5	38.2	40.8	34.9	35.6	37.3	39.8	33.2	33.8	35.4	37.8	30.7	31.3	32.8	35.0
		S/T	0.87	0.84	0.76	0.61	0.90	0.87	0.78	0.64	0.92	0.89	0.80	0.65	0.95	0.92	0.83	0.67	0.99	0.95	0.86	0.70	1.00	0.96	0.87	0.70
		Δ T	27	26	25	22	27	27	25	22	27	27	25	22	27	27	25	22	27	27	25	22	25	25	23	20
		kW	2.66	2.71	2.80	2.89	2.86	2.92	3.02	3.12	3.04	3.11	3.21	3.32	3.20	3.27	3.38	3.49	3.34	3.41	3.52	3.64	3.45	3.53	3.65	3.77
		Amps	11.3	11.6	11.9	12.4	12.2	12.5	12.9	13.3	13.2	13.5	13.9	14.4	14.1	14.4	14.8	15.4	14.9	15.3	15.8	16.3	15.8	16.1	16.7	17.3
		HI PR	239	257	271	283	268	288	305	318	305	328	346	361	347	374	395	411	391	420	444	463	432	464	490	511
		LO PR	108	115	125	133	114	121	132	141	118	126	138	147	124	132	145	154	130	139	151	161	135	143	157	167

IDB = Entering Indoor Dry Bulb Temperature

Shaded area reflects AHRI (TVA) conditions.

kW = total system power

High and low pressures are measured at the liquid and suction access fittings.

Amps: Unit amps (comp.+ evaporator + condenser fan motors)

Expanded Cooling Data — GPC1448H41**

			Outdoor Ambient Temperature																							
			65				75				85				95				105				115			
			Entering Indoor Wet Bulb Temperature																							
IDB	Airflow		59	63	67	71	59	63	67	71	59	63	67	71	59	63	67	71	59	63	67	71	59	63	67	71
70	1777	MBh	46.1	47.8	52.4	-	45.1	46.7	51.2	-	44.0	45.6	49.9	-	42.9	44.5	48.7	-	40.8	42.2	46.3	-	37.8	39.1	42.9	-
		S/T	0.75	0.63	0.43	-	0.78	0.65	0.45	-	0.80	0.67	0.46	-	0.82	0.69	0.48	-	0.85	0.71	0.49	-	0.86	0.72	0.50	-
		ΔT	18	15	12	-	18	16	12	-	18	16	12	-	18	16	12	-	18	16	12	-	17	15	11	-
		kW	2.39	2.46	2.55	-	2.63	2.70	2.80	-	2.83	2.91	3.02	-	3.01	3.09	3.22	-	3.17	3.25	3.38	-	3.30	3.39	3.52	-
		Amps	13.2	13.4	13.8	-	14.1	14.4	14.8	-	15.2	15.5	16.0	-	16.1	16.5	17.0	-	17.1	17.4	18.0	-	18.0	18.4	19.0	-
		HI PR	232	250	264	-	261	281	296	-	297	319	337	-	338	364	384	-	380	409	432	-	420	452	477	-
		LO PR	111	118	129	-	117	125	136	-	122	129	141	-	128	136	148	-	134	143	156	-	139	147	161	-
	1582	MBh	44.8	46.4	50.9	-	43.7	45.3	49.7	-	42.7	44.3	48.5	-	41.7	43.2	47.3	-	39.6	41.0	44.9	-	36.7	38.0	41.6	-
		S/T	0.72	0.60	0.41	-	0.74	0.62	0.43	-	0.76	0.64	0.44	-	0.79	0.66	0.45	-	0.81	0.68	0.47	-	0.82	0.69	0.48	-
		ΔT	19	16	12	-	19	16	12	-	19	16	12	-	19	16	12	-	19	16	12	-	18	15	12	-
		kW	2.37	2.43	2.53	-	2.60	2.67	2.78	-	2.80	2.88	2.99	-	2.98	3.06	3.19	-	3.14	3.22	3.35	-	3.27	3.36	3.49	-
		Amps	13.1	13.3	13.7	-	14.0	14.3	14.7	-	15.1	15.4	15.9	-	16.0	16.3	16.8	-	16.9	17.3	17.8	-	17.8	18.2	18.8	-
		HI PR	230	248	262	-	258	278	293	-	294	316	334	-	335	360	380	-	376	405	428	-	416	447	473	-
		LO PR	110	117	127	-	116	123	135	-	120	128	140	-	127	135	147	-	133	141	154	-	137	146	159	-
	1386	MBh	41.3	42.8	46.9	-	40.4	41.8	45.8	-	39.4	40.8	44.8	-	38.5	39.9	43.7	-	36.5	37.9	41.5	-	33.8	35.1	38.4	-
		S/T	0.69	0.58	0.40	-	0.72	0.60	0.41	-	0.73	0.61	0.42	-	0.76	0.63	0.44	-	0.79	0.66	0.45	-	0.79	0.66	0.46	-
		ΔT	19	16	12	-	19	17	13	-	19	17	13	-	19	17	13	-	19	16	13	-	18	15	12	-
		kW	2.30	2.36	2.45	-	2.52	2.59	2.69	-	2.72	2.79	2.90	-	2.89	2.97	3.09	-	3.04	3.12	3.25	-	3.17	3.26	3.38	-
		Amps	12.7	13.0	13.4	-	13.6	13.9	14.3	-	14.7	15.0	15.5	-	15.6	15.9	16.4	-	16.5	16.9	17.4	-	17.4	17.8	18.3	-
		HI PR	223	240	254	-	251	270	285	-	285	307	324	-	324	349	369	-	365	393	415	-	403	434	458	-
		LO PR	106	113	124	-	112	120	131	-	117	124	136	-	123	131	143	-	129	137	149	-	133	142	155	-
75	1777	MBh	46.9	48.3	52.3	56.1	45.8	47.2	51.1	54.8	44.7	46.0	49.8	53.5	43.6	44.9	48.6	52.2	41.5	42.7	46.2	49.6	38.4	39.5	42.8	45.9
		S/T	0.85	0.76	0.58	0.37	0.88	0.79	0.60	0.39	0.91	0.81	0.61	0.39	0.94	0.84	0.63	0.41	0.97	0.87	0.66	0.42	0.98	0.88	0.66	0.43
		ΔT	21	19	16	11	21	19	16	11	21	19	16	11	21	19	16	11	21	19	16	11	19	18	15	10
		kW	2.42	2.48	2.58	2.68	2.65	2.72	2.83	2.95	2.86	2.94	3.05	3.18	3.04	3.13	3.25	3.38	3.20	3.29	3.42	3.55	3.34	3.43	3.56	3.70
		Amps	13.3	13.5	13.9	14.4	14.2	14.5	14.9	15.5	15.3	15.6	16.1	16.7	16.3	16.6	17.1	17.7	17.2	17.6	18.1	18.8	18.1	18.6	19.1	19.8
		HI PR	235	253	267	278	263	284	299	312	300	322	341	355	341	367	388	405	384	413	436	455	424	457	482	503
		LO PR	112	119	130	138	118	126	137	146	123	131	143	152	129	137	150	160	135	144	157	167	140	149	163	173
	1582	MBh	45.5	46.9	50.8	54.5	44.5	45.8	49.6	53.2	43.4	44.7	48.4	51.9	42.4	**43.6**	47.2	50.7	40.2	41.4	44.9	48.1	37.3	38.4	41.5	44.6
		S/T	0.81	0.73	0.55	0.35	0.84	0.75	0.57	0.37	0.86	0.77	0.59	0.38	0.89	**0.80**	0.60	0.39	0.93	0.83	0.63	0.40	0.93	0.84	0.63	0.41
		ΔT	22	20	16	11	22	20	16	11	22	20	16	11	22	**20**	17	11	22	20	16	11	20	19	15	11
		kW	2.39	2.46	2.56	2.66	2.63	2.70	2.80	2.92	2.83	2.91	3.02	3.15	3.01	**3.10**	3.22	3.35	3.17	3.25	3.38	3.52	3.30	3.39	3.53	3.67
		Amps	13.2	13.4	13.8	14.3	14.1	14.4	14.8	15.3	15.2	15.5	16.0	16.5	16.1	**16.5**	17.0	17.6	17.1	17.5	18.0	18.6	18.0	18.4	19.0	19.6
		HI PR	233	250	264	276	261	281	296	309	297	319	337	352	338	**364**	384	401	380	409	432	451	420	452	477	498
		LO PR	111	118	129	137	117	125	136	145	122	129	141	151	128	**136**	149	158	134	143	156	166	139	147	161	171
	1386	MBh	42.0	43.3	46.8	50.3	41.1	42.3	45.8	49.1	40.1	41.3	44.7	47.9	39.1	40.3	43.6	46.8	37.1	38.2	41.4	44.4	34.4	35.4	38.3	41.2
		S/T	0.78	0.70	0.53	0.34	0.81	0.73	0.55	0.35	0.83	0.75	0.56	0.36	0.86	0.77	0.58	0.37	0.89	0.80	0.60	0.39	0.90	0.81	0.61	0.39
		ΔT	22	20	17	11	22	20	17	12	22	20	17	12	22	21	17	12	22	20	17	11	21	19	16	11
		kW	2.32	2.38	2.48	2.58	2.55	2.62	2.72	2.83	2.75	2.82	2.93	3.05	2.92	3.00	3.12	3.25	3.07	3.16	3.28	3.41	3.20	3.29	3.42	3.56
		Amps	12.8	13.1	13.5	13.9	13.8	14.1	14.5	14.9	14.8	15.1	15.6	16.1	15.7	16.1	16.6	17.1	16.6	17.0	17.5	18.1	17.5	17.9	18.5	19.1
		HI PR	226	243	256	267	253	272	288	300	288	310	327	341	328	353	373	389	369	397	419	437	407	438	463	483
		LO PR	108	114	125	133	114	121	132	141	118	126	137	146	124	132	144	153	130	138	151	161	134	143	156	166

IDB = Entering Indoor Dry Bulb Temperature

Shaded area reflects ACCA (TVA) conditions.

kW = total system power

High and low pressures are measured at the liquid and suction access fittings.

Amps: Unit amps (comp.+ evaporator + condenser fan motors)

Expanded Cooling Data — GPC1448H41** (cont.)

			Outdoor Ambient Temperature																							
			65				75				85				95				105				115			
			Entering Indoor Wet Bulb Temperature																							
IDB	Airflow		59	63	67	71	59	63	67	71	59	63	67	71	59	63	67	71	59	63	67	71	59	63	67	71
80	1777	MBh	47.7	48.8	52.1	55.7	46.6	47.6	50.9	54.4	45.5	46.5	49.7	53.1	44.4	45.4	48.5	51.8	42.2	43.1	46.1	49.2	39.1	39.9	42.7	45.6
		S/T	0.94	0.88	0.71	0.53	0.97	0.91	0.74	0.55	1.00	0.93	0.76	0.57	1.00	0.96	0.78	0.59	1.00	1.00	0.81	0.61	1.00	1.00	0.82	0.61
		ΔT	23	22	19	15	23	22	19	16	24	22	20	16	23	23	20	16	22	22	19	15	20	21	18	14
		kW	2.44	2.51	2.61	2.71	2.68	2.75	2.86	2.98	2.89	2.97	3.09	3.21	3.08	3.16	3.28	3.42	3.23	3.32	3.45	3.59	3.37	3.46	3.60	3.74
		Amps	13.4	13.7	14.1	14.5	14.3	14.6	15.1	15.6	15.4	15.8	16.3	16.8	16.4	16.8	17.3	17.9	17.4	17.7	18.3	18.9	18.3	18.7	19.3	20.0
		HI PR	237	255	270	281	266	286	302	315	303	326	344	359	345	371	392	409	388	417	441	460	429	461	487	508
		LO PR	113	120	131	140	119	127	139	148	124	132	144	154	130	139	152	161	137	145	159	169	141	150	164	175
	1582	MBh	46.4	47.4	50.6	54.1	45.3	46.3	49.4	52.8	44.2	45.2	48.2	51.6	43.1	44.1	**47.1**	50.3	41.0	41.9	44.7	47.8	37.9	38.8	41.4	44.3
		S/T	0.89	0.84	0.68	0.51	0.92	0.87	0.71	0.53	0.95	0.89	0.72	0.54	0.98	0.92	**0.75**	0.56	1.00	0.95	0.78	0.58	1.00	0.96	0.78	0.58
		ΔT	24	23	20	16	24	23	20	16	24	23	20	16	25	24	**20**	16	24	23	20	16	22	22	19	15
		kW	2.42	2.48	2.58	2.68	2.65	2.72	2.83	2.95	2.86	2.94	3.05	3.18	3.05	3.13	**3.25**	3.38	3.20	3.29	3.42	3.56	3.34	3.43	3.56	3.70
		Amps	13.3	13.5	13.9	14.4	14.2	14.5	15.0	15.5	15.3	15.6	16.1	16.7	16.3	16.6	**17.1**	17.7	17.2	17.6	18.1	18.8	18.1	18.6	19.1	19.8
		HI PR	235	253	267	278	264	284	299	312	300	323	341	355	341	367	**388**	405	384	413	436	455	424	457	482	503
		LO PR	112	119	130	139	118	126	137	146	123	131	143	152	129	137	**150**	160	135	144	157	167	140	149	163	173
	1386	MBh	42.8	43.7	46.7	49.9	41.8	42.7	45.6	48.8	40.8	41.7	44.5	47.6	39.8	40.7	43.4	46.4	37.8	38.6	41.3	44.1	35.0	35.8	38.2	40.9
		S/T	0.86	0.81	0.66	0.49	0.89	0.84	0.68	0.51	0.91	0.86	0.70	0.52	0.94	0.89	0.72	0.54	0.98	0.92	0.75	0.56	0.99	0.93	0.75	0.56
		ΔT	24	23	20	16	25	24	21	16	25	24	21	16	25	24	21	17	25	24	20	16	23	22	19	15
		kW	2.34	2.41	2.50	2.60	2.57	2.64	2.75	2.86	2.78	2.85	2.96	3.08	2.95	3.03	3.15	3.28	3.10	3.19	3.31	3.45	3.24	3.32	3.45	3.59
		Amps	12.9	13.2	13.6	14.1	13.9	14.2	14.6	15.1	14.9	15.3	15.7	16.3	15.9	16.2	16.7	17.3	16.8	17.2	17.7	18.3	17.7	18.1	18.6	19.3
		HI PR	228	245	259	270	256	275	290	303	291	313	330	345	331	356	376	392	373	401	423	441	412	443	468	488
		LO PR	109	116	126	134	115	122	133	142	119	127	139	148	125	133	146	155	131	140	152	162	136	144	158	168
85	1777	MBh	48.6	49.5	51.9	55.3	47.4	48.4	50.7	54.0	46.3	47.2	49.4	52.8	45.2	46.1	48.2	51.5	42.9	43.8	45.8	48.9	39.8	40.5	42.5	45.3
		S/T	0.98	0.95	0.85	0.69	1.00	0.98	0.89	0.72	1.00	1.00	0.91	0.74	1.00	1.00	0.94	0.76	1.00	1.00	0.97	0.79	1.00	1.00	0.98	0.80
		ΔT	25	24	23	20	25	25	23	20	24	24	23	20	23	24	23	20	22	23	23	20	21	21	22	19
		kW	2.47	2.53	2.63	2.74	2.71	2.78	2.89	3.01	2.92	3.00	3.12	3.24	3.11	3.19	3.32	3.45	3.27	3.35	3.49	3.63	3.40	3.49	3.63	3.78
		Amps	13.5	13.8	14.2	14.6	14.4	14.8	15.2	15.7	15.6	15.9	16.4	17.0	16.5	16.9	17.4	18.0	17.5	17.9	18.5	19.1	18.5	18.9	19.5	20.2
		HI PR	240	258	272	284	269	289	305	319	306	329	347	362	348	375	396	413	392	422	445	464	433	466	492	513
		LO PR	114	122	133	141	121	128	140	149	125	133	146	155	132	140	153	163	138	147	160	171	143	152	166	177
	1582	MBh	47.2	48.1	50.3	53.7	46.1	47.0	49.2	52.5	45.0	45.8	48.0	51.2	43.9	44.7	46.8	50.0	41.7	42.5	44.5	47.5	38.6	39.4	41.2	44.0
		S/T	0.94	0.90	0.81	0.66	0.97	0.94	0.84	0.68	0.99	0.96	0.87	0.70	1.00	0.99	0.89	0.72	1.00	1.00	0.93	0.75	1.00	1.00	0.94	0.76
		ΔT	26	25	24	21	26	26	24	21	26	26	24	21	26	26	24	21	24	25	24	21	22	23	22	19
		kW	2.44	2.51	2.61	2.71	2.68	2.75	2.86	2.98	2.89	2.97	3.09	3.21	3.08	3.16	3.28	3.42	3.23	3.32	3.45	3.59	3.37	3.46	3.60	3.74
		Amps	13.4	13.7	14.1	14.5	14.3	14.6	15.1	15.6	15.4	15.8	16.3	16.8	16.4	16.8	17.3	17.9	17.4	17.7	18.3	18.9	18.3	18.7	19.3	20.0
		HI PR	237	255	270	281	266	286	302	315	303	326	344	359	345	371	392	409	388	417	441	460	429	461	487	508
		LO PR	113	120	131	140	119	127	139	148	124	132	144	154	130	139	152	161	137	145	159	169	141	150	164	175
	1386	MBh	43.5	44.4	46.5	49.6	42.5	43.3	45.4	48.4	41.5	42.3	44.3	47.3	40.5	41.3	43.2	46.1	38.5	39.2	41.1	43.8	35.6	36.3	38.0	40.6
		S/T	0.90	0.87	0.79	0.64	0.93	0.90	0.81	0.66	0.96	0.92	0.83	0.68	0.99	0.95	0.86	0.70	1.00	0.99	0.89	0.73	1.00	1.00	0.90	0.73
		ΔT	26	26	24	21	26	26	25	21	26	26	25	21	27	26	25	21	26	26	24	21	24	24	23	20
		kW	2.37	2.43	2.53	2.63	2.60	2.67	2.77	2.89	2.80	2.88	2.99	3.11	2.98	3.06	3.18	3.31	3.14	3.22	3.35	3.48	3.27	3.36	3.49	3.63
		Amps	13.1	13.3	13.7	14.2	14.0	14.3	14.7	15.2	15.1	15.4	15.8	16.4	16.0	16.3	16.8	17.4	16.9	17.3	17.8	18.4	17.8	18.2	18.8	19.5
		HI PR	230	248	261	273	258	278	293	306	294	316	334	348	334	360	380	396	376	405	428	446	416	447	472	493
		LO PR	110	117	127	136	116	123	135	143	120	128	140	149	127	135	147	157	133	141	154	164	137	146	159	170

IDB = Entering Indoor Dry Bulb Temperature

Shaded area reflects AHRI (TVA) conditions.

kW = total system power

High and low pressures are measured at the liquid and suction access fittings.

Amps: Unit amps (comp.+ evaporator + condenser fan motors)

Expanded Cooling Data — GPC1460H41**

			Outdoor Ambient Temperature																							
			65				75				85				95				105				115			
			Entering Indoor Wet Bulb Temperature																							
IDB	Airflow		59	63	67	71	59	63	67	71	59	63	67	71	59	63	67	71	59	63	67	71	59	63	67	71
70	1900	MBh	56.3	58.4	64.0	-	55.0	57.0	62.5	-	53.7	55.7	61.0	-	52.4	54.3	59.5	-	49.8	51.6	56.5	-	46.1	47.8	52.4	-
		S/T	0.71	0.60	0.41	-	0.74	0.62	0.43	-	0.76	0.63	0.44	-	0.78	0.65	0.45	-	0.81	0.68	0.47	-	0.82	0.69	0.47	-
		Δ T	21	18	14	-	21	18	14	-	21	18	14	-	21	18	14	-	21	18	14	-	19	17	13	-
		kW	3.70	3.78	3.91	-	4.00	4.09	4.23	-	4.26	4.36	4.51	-	4.49	4.60	4.75	-	4.69	4.80	4.96	-	4.86	4.97	5.14	-
		Amps	15.7	16.0	16.5	-	16.9	17.2	17.8	-	18.2	18.6	19.2	-	19.4	19.9	20.5	-	20.6	21.1	21.7	-	21.7	22.3	23.0	-
		HI PR	238	256	271	-	267	288	304	-	304	327	345	-	346	373	393	-	390	419	443	-	430	463	489	-
		LO PR	108	115	125	-	114	121	132	-	118	126	137	-	124	132	144	-	130	139	151	-	135	143	156	-
	1700	MBh	54.7	56.7	62.1	-	53.4	55.4	60.7	-	52.2	54.1	59.2	-	50.9	52.7	57.8	-	48.3	50.1	54.9	-	44.8	46.4	50.9	-
		S/T	0.68	0.57	0.39	-	0.71	0.59	0.41	-	0.72	0.60	0.42	-	0.75	0.62	0.43	-	0.78	0.65	0.45	-	0.78	0.65	0.45	-
		Δ T	21	19	14	-	22	19	14	-	22	19	14	-	22	19	14	-	22	19	14	-	20	17	13	-
		kW	3.67	3.75	3.88	-	3.97	4.06	4.19	-	4.23	4.32	4.47	-	4.46	4.56	4.71	-	4.65	4.76	4.92	-	4.82	4.93	5.10	-
		Amps	15.6	15.9	16.4	-	16.7	17.1	17.6	-	18.1	18.5	19.1	-	19.2	19.7	20.3	-	20.4	20.9	21.5	-	21.6	22.1	22.8	-
		HI PR	236	254	268	-	265	285	301	-	301	324	342	-	343	369	390	-	386	415	438	-	426	459	484	-
		LO PR	107	114	124	-	113	120	131	-	117	125	136	-	123	131	143	-	129	137	150	-	133	142	155	-
	1500	MBh	50.5	52.3	57.3	-	49.3	51.1	56.0	-	48.1	49.9	54.7	-	47.0	48.7	53.3	-	44.6	46.2	50.7	-	41.3	42.8	46.9	-
		S/T	0.66	0.55	0.38	-	0.68	0.57	0.39	-	0.70	0.58	0.40	-	0.72	0.60	0.42	-	0.75	0.62	0.43	-	0.75	0.63	0.44	-
		Δ T	22	19	14	-	22	19	14	-	22	19	15	-	22	19	15	-	22	19	14	-	20	18	13	-
		kW	3.58	3.66	3.78	-	3.87	3.95	4.08	-	4.12	4.21	4.35	-	4.34	4.44	4.59	-	4.53	4.63	4.79	-	4.69	4.80	4.97	-
		Amps	15.2	15.5	16.0	-	16.3	16.7	17.2	-	17.6	18.0	18.6	-	18.7	19.2	19.8	-	19.9	20.3	21.0	-	21.0	21.5	22.2	-
		HI PR	229	246	260	-	257	276	292	-	292	314	332	-	333	358	378	-	374	403	425	-	413	445	470	-
		LO PR	103	110	120	-	109	116	127	-	114	121	132	-	119	127	139	-	125	133	145	-	129	138	150	-
75	1900	MBh	57.3	59.0	63.9	68.5	56.0	57.6	62.4	66.9	54.6	56.3	60.9	65.3	53.3	54.9	59.4	63.8	50.6	52.1	56.4	60.6	46.9	48.3	52.3	56.1
		S/T	0.81	0.73	0.55	0.35	0.84	0.75	0.57	0.37	0.86	0.77	0.58	0.38	0.89	0.80	0.60	0.39	0.92	0.83	0.63	0.40	0.93	0.83	0.63	0.41
		Δ T	24	22	18	12	24	22	18	13	24	22	18	13	24	22	18	13	24	22	18	12	22	21	17	12
		kW	3.73	3.82	3.94	4.07	4.03	4.12	4.26	4.41	4.30	4.40	4.55	4.70	4.53	4.64	4.79	4.96	4.73	4.84	5.01	5.18	4.90	5.02	5.19	5.37
		Amps	15.8	16.2	16.7	17.2	17.0	17.4	17.9	18.6	18.4	18.8	19.4	20.1	19.6	20.0	20.7	21.4	20.8	21.3	21.9	22.7	21.9	22.5	23.2	24.0
		HI PR	241	259	273	285	270	291	307	320	307	330	349	364	350	376	397	415	393	423	447	466	435	468	494	515
		LO PR	109	116	126	135	115	122	134	142	120	127	139	148	126	134	146	155	132	140	153	163	136	145	158	168
	1700	MBh	55.6	57.3	62.0	66.5	54.3	55.9	60.6	65.0	53.0	54.6	59.1	63.4	51.8	**53.3**	57.7	61.9	49.2	50.6	54.8	58.8	45.5	46.9	50.8	54.5
		S/T	0.77	0.69	0.52	0.34	0.80	0.72	0.54	0.35	0.82	0.74	0.56	0.36	0.85	**0.76**	0.58	0.37	0.88	0.79	0.60	0.38	0.89	0.80	0.60	0.39
		Δ T	25	23	19	13	25	23	19	13	25	23	19	13	25	**23**	19	13	25	23	19	13	23	21	18	12
		kW	3.70	3.79	3.91	4.04	4.00	4.09	4.23	4.37	4.26	4.36	4.51	4.66	4.49	**4.60**	4.75	4.92	4.69	4.80	4.96	5.14	4.86	4.97	5.14	5.32
		Amps	15.7	16.0	16.5	17.1	16.9	17.3	17.8	18.4	18.2	18.6	19.2	19.9	19.4	**19.9**	20.5	21.2	20.6	21.1	21.7	22.5	21.7	22.3	23.0	23.8
		HI PR	238	256	271	282	267	288	304	317	304	327	346	360	346	**373**	394	410	390	419	443	462	430	463	489	510
		LO PR	108	115	125	133	114	121	132	141	118	126	137	146	124	**132**	144	154	130	139	151	161	135	143	157	167
	1500	MBh	51.3	52.9	57.2	61.4	50.2	51.6	55.9	60.0	49.0	50.4	54.6	58.6	47.8	49.2	53.2	57.1	45.4	46.7	50.6	54.3	42.0	43.3	46.8	50.3
		S/T	0.75	0.67	0.51	0.33	0.77	0.69	0.52	0.34	0.79	0.71	0.54	0.35	0.82	0.73	0.55	0.36	0.85	0.76	0.58	0.37	0.86	0.77	0.58	0.37
		Δ T	25	23	19	13	25	23	19	13	26	24	19	13	26	24	19	13	25	23	19	13	24	22	18	12
		kW	3.61	3.69	3.81	3.94	3.90	3.99	4.12	4.26	4.15	4.25	4.39	4.54	4.38	4.48	4.63	4.79	4.57	4.67	4.83	5.00	4.73	4.84	5.01	5.18
		Amps	15.3	15.6	16.1	16.7	16.4	16.8	17.3	17.9	17.8	18.2	18.7	19.4	18.9	19.3	19.9	20.7	20.0	20.5	21.2	21.9	21.2	21.7	22.4	23.2
		HI PR	231	249	263	274	259	279	295	307	295	317	335	350	336	361	382	398	378	407	429	448	418	449	474	495
		LO PR	105	111	121	129	110	118	128	137	115	122	133	142	121	128	140	149	126	134	147	156	131	139	152	162

IDB = Entering Indoor Dry Bulb Temperature

Shaded area reflects ACCA (TVA) conditions.

kW = total system power

High and low pressures are measured at the liquid and suction access fittings.

Amps: Unit amps (comp.+ evaporator + condenser fan motors)

Expanded Cooling Data — GPC1460H41** (cont.)

			Outdoor Ambient Temperature																							
			65				75				85				95				105				115			
			Entering Indoor Wet Bulb Temperature																							
IDB	Airflow		59	63	67	71	59	63	67	71	59	63	67	71	59	63	67	71	59	63	67	71	59	63	67	71
80	1900	MBh	58.3	59.6	63.7	68.1	57.0	58.2	62.2	66.5	55.6	56.8	60.7	64.9	54.3	55.4	59.2	63.3	51.5	52.7	56.3	60.1	47.7	48.8	52.1	55.7
		S/T	0.89	0.84	0.68	0.51	0.92	0.87	0.70	0.53	0.95	0.89	0.72	0.54	1.00	0.92	0.75	0.56	1.00	0.95	0.77	0.58	1.00	0.96	0.78	0.58
		Δ T	27	25	22	18	27	26	22	18	27	26	22	18	28	26	23	18	26	26	22	18	24	24	21	17
		kW	3.77	3.85	3.98	4.11	4.07	4.16	4.30	4.45	4.34	4.43	4.58	4.74	4.57	4.68	4.84	5.00	4.77	4.88	5.05	5.23	4.95	5.06	5.24	5.42
		Amps	16.0	16.3	16.8	17.4	17.2	17.5	18.1	18.7	18.5	19.0	19.6	20.3	19.8	20.2	20.8	21.6	21.0	21.4	22.1	22.9	22.1	22.7	23.4	24.2
		HI PR	243	262	276	288	273	294	310	323	310	334	352	368	353	380	401	419	397	428	452	471	439	473	499	520
		LO PR	110	117	128	136	116	124	135	144	121	128	140	149	127	135	147	157	133	141	154	164	137	146	160	170
	1700	MBh	56.6	57.9	61.8	66.1	55.3	56.5	60.4	64.5	54.0	55.2	58.9	63.0	52.7	53.8	**57.5**	61.5	50.0	51.1	54.6	58.4	46.3	47.4	50.6	54.1
		S/T	0.85	0.80	0.65	0.48	0.88	0.83	0.67	0.50	0.90	0.85	0.69	0.52	0.93	0.87	**0.71**	0.53	0.97	0.91	0.74	0.55	0.98	0.91	0.74	0.56
		Δ T	28	26	23	18	28	27	23	19	28	27	23	19	28	27	**24**	19	28	27	23	19	26	25	22	17
		kW	3.73	3.82	3.94	4.08	4.03	4.13	4.26	4.41	4.30	4.40	4.55	4.70	4.53	4.64	**4.80**	4.96	4.73	4.84	5.01	5.18	4.90	5.02	5.19	5.37
		Amps	15.8	16.2	16.7	17.2	17.0	17.4	17.9	18.6	18.4	18.8	19.4	20.1	19.6	20.0	**20.7**	21.4	20.8	21.3	21.9	22.7	21.9	22.5	23.2	24.0
		HI PR	241	259	273	285	270	291	307	320	307	331	349	364	350	376	**398**	415	394	423	447	466	435	468	494	515
		LO PR	109	116	126	135	115	122	134	142	120	127	139	148	126	134	**146**	155	132	140	153	163	136	145	158	168
	1500	MBh	52.3	53.4	57.1	61.0	51.0	52.2	55.7	59.6	49.8	50.9	54.4	58.2	48.6	49.7	53.1	56.7	46.2	47.2	50.4	53.9	42.8	43.7	46.7	49.9
		S/T	0.82	0.77	0.63	0.47	0.85	0.80	0.65	0.48	0.87	0.82	0.66	0.50	0.90	0.84	0.69	0.51	0.93	0.87	0.71	0.53	0.94	0.88	0.72	0.54
		Δ T	28	27	23	19	28	27	24	19	28	27	24	19	29	27	24	19	28	27	24	19	26	25	22	18
		kW	3.64	3.72	3.84	3.97	3.93	4.02	4.15	4.29	4.19	4.28	4.43	4.58	4.42	4.52	4.67	4.83	4.61	4.71	4.88	5.05	4.78	4.89	5.05	5.23
		Amps	15.4	15.8	16.2	16.8	16.6	17.0	17.5	18.1	17.9	18.3	18.9	19.6	19.1	19.5	20.1	20.8	20.2	20.7	21.3	22.1	21.4	21.9	22.6	23.4
		HI PR	233	251	265	277	262	282	298	310	298	321	339	353	339	365	386	402	382	411	434	452	422	454	479	500
		LO PR	106	112	123	131	112	119	130	138	116	123	135	143	122	130	141	151	128	136	148	158	132	140	153	163
85	1900	MBh	59.3	60.5	63.3	67.6	58.0	59.1	61.9	66.0	56.6	57.7	60.4	64.4	55.2	56.3	58.9	62.9	52.4	53.5	56.0	59.7	48.6	49.5	51.9	55.3
		S/T	0.93	0.90	0.81	0.66	0.97	0.93	0.84	0.68	0.99	0.96	0.86	0.70	1.00	0.99	0.89	0.72	1.00	1.00	0.93	0.75	1.00	1.00	0.93	0.76
		Δ T	28	28	26	23	29	28	27	23	29	28	27	23	28	28	27	23	27	27	26	23	25	25	25	21
		kW	3.80	3.88	4.01	4.14	4.10	4.20	4.34	4.48	4.37	4.47	4.62	4.78	4.61	4.72	4.88	5.05	4.81	4.93	5.09	5.27	4.99	5.10	5.28	5.47
		Amps	16.1	16.5	17.0	17.5	17.3	17.7	18.2	18.9	18.7	19.1	19.7	20.4	19.9	20.4	21.0	21.8	21.1	21.6	22.3	23.1	22.3	22.9	23.6	24.5
		HI PR	245	264	279	291	275	296	313	326	313	337	356	371	357	384	405	423	401	432	456	476	444	477	504	526
		LO PR	111	118	129	137	117	125	136	145	122	130	142	151	128	136	149	158	134	143	156	166	139	148	161	172
	1700	MBh	57.6	58.7	61.5	65.6	56.3	57.4	60.1	64.1	54.9	56.0	58.6	62.6	53.6	54.6	57.2	61.0	50.9	51.9	54.4	58.0	47.2	48.1	50.3	53.7
		S/T	0.89	0.86	0.78	0.63	0.92	0.89	0.80	0.65	0.95	0.91	0.82	0.67	0.98	0.94	0.85	0.69	1.00	0.98	0.88	0.72	1.00	0.99	0.89	0.72
		Δ T	29	29	27	24	30	29	28	24	30	29	28	24	30	30	28	24	29	29	28	24	27	27	26	22
		kW	3.77	3.85	3.98	4.11	4.07	4.16	4.30	4.45	4.34	4.43	4.58	4.74	4.57	4.68	4.84	5.00	4.77	4.88	5.05	5.23	4.95	5.06	5.24	5.42
		Amps	16.0	16.3	16.8	17.4	17.2	17.5	18.1	18.7	18.5	19.0	19.6	20.3	19.8	20.2	20.8	21.6	21.0	21.4	22.1	22.9	22.1	22.7	23.4	24.2
		HI PR	243	262	276	288	273	294	310	323	310	334	352	368	353	380	401	419	397	428	452	471	439	473	499	520
		LO PR	110	117	128	136	116	124	135	144	121	128	140	149	127	135	147	157	133	141	154	164	137	146	160	170
	1500	MBh	53.2	54.2	56.8	60.6	51.9	52.9	55.4	59.2	50.7	51.7	54.1	57.7	49.5	50.4	52.8	56.3	47.0	47.9	50.2	53.5	43.5	44.4	46.5	49.6
		S/T	0.86	0.83	0.75	0.61	0.89	0.86	0.78	0.63	0.91	0.88	0.79	0.64	0.94	0.91	0.82	0.67	0.98	0.94	0.85	0.69	0.99	0.95	0.86	0.70
		Δ T	30	30	28	24	30	30	28	24	30	30	28	24	31	30	28	25	30	30	28	24	28	28	26	23
		kW	3.67	3.75	3.88	4.01	3.97	4.05	4.19	4.33	4.23	4.32	4.47	4.62	4.45	4.56	4.71	4.87	4.65	4.76	4.92	5.09	4.82	4.93	5.10	5.28
		Amps	15.6	15.9	16.4	17.0	16.7	17.1	17.6	18.2	18.1	18.5	19.1	19.7	19.2	19.7	20.3	21.0	20.4	20.9	21.5	22.3	21.5	22.1	22.8	23.6
		HI PR	236	254	268	279	265	285	301	314	301	324	342	357	343	369	389	406	386	415	438	457	426	458	484	505
		LO PR	107	113	124	132	113	120	131	139	117	125	136	145	123	131	143	152	129	137	150	159	133	142	155	165

IDB = Entering Indoor Dry Bulb Temperature

Shaded area reflects AHRI (TVA) conditions.

kW = total system power

High and low pressures are measured at the liquid and suction access fittings.

Amps: Unit amps (comp.+ evaporator + condenser fan motors)

Airflow Data

Model	Speed*	Volts	Type	E.S.P. (In. of H_2O)							
				0.1	0.2	0.3	0.4	0.5	0.6	0.7	0.8
GPC14 24H41A*/ B*	T1	230	CFM	934	759	755	638	581	489	---	---
			Watts	95	77	76	73	83	90	---	---
	T2,T3	230	CFM	990	837	801	744	696	652	601	---
			Watts	107	94	105	110	119	133	142	---
	T4, T5	230	CFM	1061	989	947	925	876	---	---	---
			Watts	126	134	146	158	169	---	---	---
GPC14 24H41C*	T1	230	CFM	922	873	823	774	724	675	626	576
			Watts	74	85	96	107	118	129	140	151
	T2,T3	230	CFM	922	873	823	774	724	675	626	576
			Watts	74	85	96	107	118	129	140	151
	T4, T5	230	CFM	1069	1020	971	921	872	822	773	724
			Watts	102	113	124	135	146	157	168	179
GPC14 30H41A*/ B*	T1	230	CFM	1022	929	894	829	797	748	695	643
			Watts	116	114	126	134	144	156	168	173
	T2,T3	230	CFM	1103	1063	1012	962	937	---	---	---
			Watts	142	154	165	173	185	---	---	---
	T4, T5	230	CFM	1285	1240	1202	1163	1124	1076	1046	1003
			Watts	205	218	231	244	257	268	280	288
GPC14 30H41C*	T1	230	CFM	1048	993	939	884	829	775	720	666
			Watts	97	109	122	134	147	159	172	184
	T2,T3	230	CFM	1123	1068	1014	959	905	850	796	741
			Watts	123	136	148	161	173	186	198	211
	T4, T5	230	CFM	1244	1189	1135	1080	1026	971	917	862
			Watts	158	170	183	195	208	220	233	245
GPC14 36H41A*/ B*	T1	230	CFM	1234	1111	1071	1024	933	922	---	---
			Watts	144	140	152	164	179	183	---	---
	T2,T3	230	CFM	1287	1232	1186	1133	1099	1053	---	---
			Watts	162	175	187	201	213	221	---	---
	T4, T5	230	CFM	1381	1325	1277	1233	1181	1144	---	---
			Watts	195	203	217	233	247	258	---	---
GPC14 36H41C*	T1	230	CFM	1151	1097	1042	988	933	879	824	770
			Watts	132	144	156	169	181	194	206	219
	T2,T3	230	CFM	1261	1215	1169	1123	1076	1030	984	937
			Watts	131	144	157	169	182	194	207	220
	T4, T5	230	CFM	1376	1330	1284	1237	1191	1145	1099	1052
			Watts	170	182	195	207	220	233	245	258

* Speed set at T2 at the factory.

Airflow Data (cont.)

Model	Speed*	Volts	Type	E.S.P. (In. of H_2O)							
				0.1	0.2	0.3	0.4	0.5	0.6	0.7	0.8
GPC14 42H41A*/ B*	T1	230	CFM	1272	1197	1145	1106	1055	998	947	906
			Watts	160	168	183	191	211	220	230	243
	T2,T3	230	CFM	1357	1297	1244	1194	1147	1099	1049	1008
			Watts	188	202	213	228	245	255	267	284
	T4, T5	230	CFM	1537	1478	1431	1386	1336	1293	1253	1208
			Watts	244	258	274	288	303	317	329	341
GPC14 42H41C*	T1	230	CFM	1165	1122	1080	1037	995	953	910	868
			Watts	118	130	142	154	166	178	190	202
	T2,T3	230	CFM	1258	1216	1173	1131	1088	1046	1004	961
			Watts	150	162	175	187	199	211	223	235
	T4, T5	230	CFM	1511	1469	1427	1384	1342	1299	1257	1214
			Watts	239	251	263	275	287	299	311	323
GPC14 48H41A*/ B*	T1	230	CFM	1418	1383	1349	1312	1275	1228	1178	1141
			Watts	242	258	273	282	299	308	320	338
	T2,T3	230	CFM	1175	1635	1645	1515	1510	1450	1430	1400
			Watts	395	420	435	445	455	465	470	475
	T4, T5	230	CFM	1845	1790	1715	1685	1590	1580	1530	1500
			Watts	490	505	520	535	550	560	570	575
GPC14 48H41C*	T1	230	CFM	1421	1367	1314	1260	1206	1152	1099	1045
			Watts	170	182	195	208	220	233	246	258
	T2,T3	230	CFM	1696	1643	1589	1535	1481	1428	1374	1320
			Watts	287	299	312	325	337	350	363	375
	T4, T5	230	CFM	1859	1805	1751	1698	1644	1590	1536	1483
			Watts	356	368	381	394	406	419	432	444
GPC14 60H41A*/ B*	T1, T2,T3	230	CFM	1850	1765	1710	1625	1575	1535	1495	1435
			Watts	360	375	380	390	400	410	420	430
	T4, T5	230	CFM	2025	1900	1840	1780	1725	1650	1620	1580
			Watts	575	595	620	630	645	655	660	670
GPC14 60H41C*	T1	230	CFM	1507	1459	1410	1362	1314	1266	1218	1169
			Watts	168	175	183	191	199	207	214	222
	T2,T3	230	CFM	1694	1646	1598	1549	1501	1453	1405	1357
			Watts	296	303	311	319	327	334	342	350
	T4, T5	230	CFM	1965	1917	1869	1821	1773	1724	1676	1628
			Watts	481	489	496	504	512	520	528	535

* Speed set at T2 at the factory.

Heat Kit Electrical Data (Blower Only, Heat Mode)

Model and Heat Kit Usage	Circuit #1		Circuit #2		Single-Point Kit		Actual kW / BTU@ 240V
	MCA[1]	MOP[2]	MCA[1]	MOP[2]	MCA[1]	MOP[2]	
GPC1424H41**	1.9	---	---	---	--	--	---
HKR-05*, HKR-05C*	21 / 25	25 / 25	---	---	24 / 27	30 / 30	4.75 / 16,200
HKR-08*, HKR-08C*	32 / 36	35 / 40	---	---	33 / 38	40 / 40	7 / 23,800
HKR-10*, HKR-10C*	43 / 49	45 / 50	---	---	45 / 51	60 / 60	9.5 / 32,400
GPC1430H41**	2.3	---	---	---	--	--	---
HKR-05*, HKR-05C*	21 / 25	25 / 25	---	---	24 / 27	30 / 30	4.75 / 16,200
HKR-08*, HKR-08C*	32 / 36	35 / 40	---	---	34 / 39	40 / 40	7 / 23,800
HKR-10*, HKR-10C*	43 / 49	45 / 50	---	---	45 / 52	60 / 60	9.5 / 32,400
HKP-15C*	43 / 49	45 / 50	21 / 25	25 / 25	67 / 77	70 / 80	14.25 / 48,600
GPC1436H41**	2.3	---	---	---	--	--	---
HKR-05*, HKR-05C*	21 / 25	25 / 25	---	---	24 / 27	40 / 40	4.75 / 16,200
HKR-08*, HKR-08C*	32 / 36	35 / 40	---	---	34 / 39	40 / 40	7 / 23,800
HKR-10*, HKR-10C*	43 / 49	45 / 50	---	---	45 / 52	60 / 60	9.5 / 32,400
HKP-15C*	43 / 49	45 / 50	21 / 25	25 / 25	67 / 77	70 / 80	14.25 / 48,600
GPC1442H41**	3.6	---	---	---	--	--	---
HKR-05*, HKR-05C*	21 / 25	25 / 25	---	---	27	40 / 40	4.75 / 16,200
HKR-08*, HKR-08C*	32 / 36	35 / 40	---	---	34 / 39	40 / 40	7 / 23,800
HKR-10*, HKR-10C*	43 / 49	45 / 50	---	---	46 / 52	60 / 60	9.5 / 32,400
HKP-15C*	43 / 49	45 / 50	21 / 25	25 / 25	68 / 78	70 / 80	14.25 / 48,600
HKP-20C	43 / 49	45 / 50	43 / 49	45 / 50	90 / 103	90 / 110	19.0 / 64,800
GPC1448H41**	3.6	---	---	---	--	--	---
HKR-05*, HKR-05C*	21 / 25	25 / 25	---	---	29	45	4.75 / 16,200
HKR-08*, HKR-08C*	32 / 36	35 / 40	---	---	34 / 40	45	7 / 23,800
HKR-10*, HKR-10C*	43 / 49	45 / 50	---	---	46 / 53	60 / 60	9.5 / 32,400
HKP-15C*	43 / 49	45 / 50	21 / 25	25 / 25	68 / 78	70 / 80	14.25 / 48,600
HKP-20C	43 / 49	45 / 50	43 / 49	45 / 50	90 / 103	90 / 110	19.0 / 64,800
GPC1460H41**	7.5	---	---	---	--	--	---
HKR-05*, HKR-05C*	21 / 25	25 / 25	---	---	37.3	60	4.75 / 16,200
HKR-08*, HKR-08C*	32 / 36	35 / 40	---	---	37/40	60	7 / 23,800
HKR-10*, HKR-10C*	43 / 49	45 / 50	---	---	48 / 54	60 / 60	9.5 / 32,400
HKP-15C*	43 / 49	45 / 50	21 / 25	25 / 25	70 / 80	80 / 90	14.25 / 48,600
HKP-20C	43 / 49	45 / 50	43 / 49	45 / 50	92 / 105	100 / 110	19.0 / 64,800

[1] Minimum Circuit Ampacity @ 208 / 240 V
[2] Maximum Overcurrent Protection Device @ 208 / 240 V
* Revision level that may or may not be designated
C Circuit breaker option
^ Heat Kit requires three-phase power supply

Note: HKP-15C* and HKP-20C* replace HKR-15C and HKR-20C respectively to meet new UL1995 requirements.

Dimensions

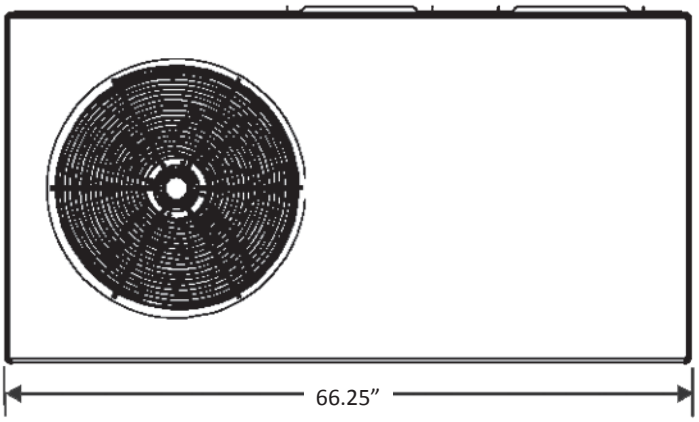

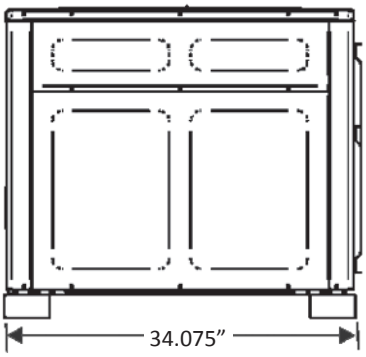

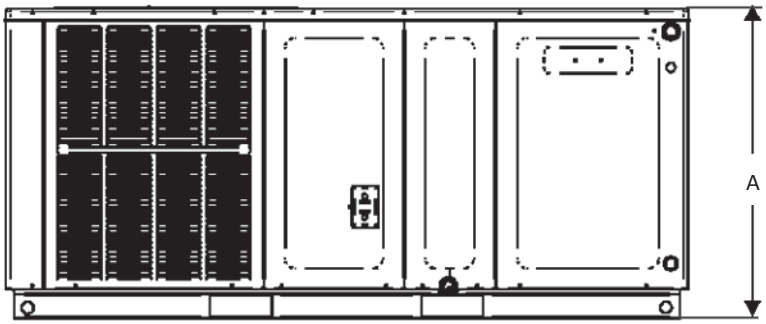

Minimal Clearances

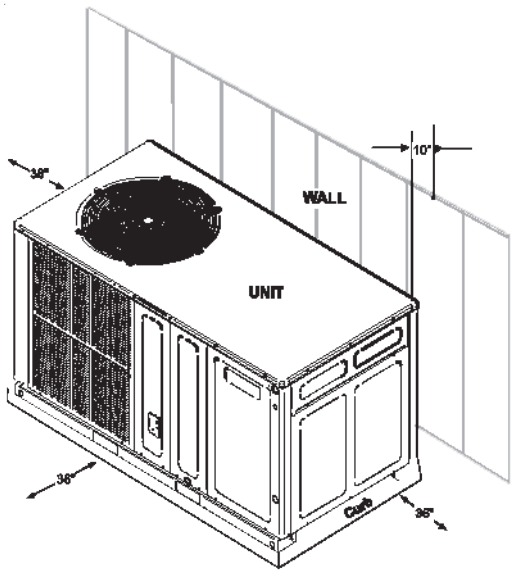

“A” Dimensions

Model	Chassis Size	Height
GPC1424 GPC1430	Small	30”
GPC1436 GPC1442	Medium	35”
GPC1448 GPC1460	Large	38¾”

WIRING DIAGRAM

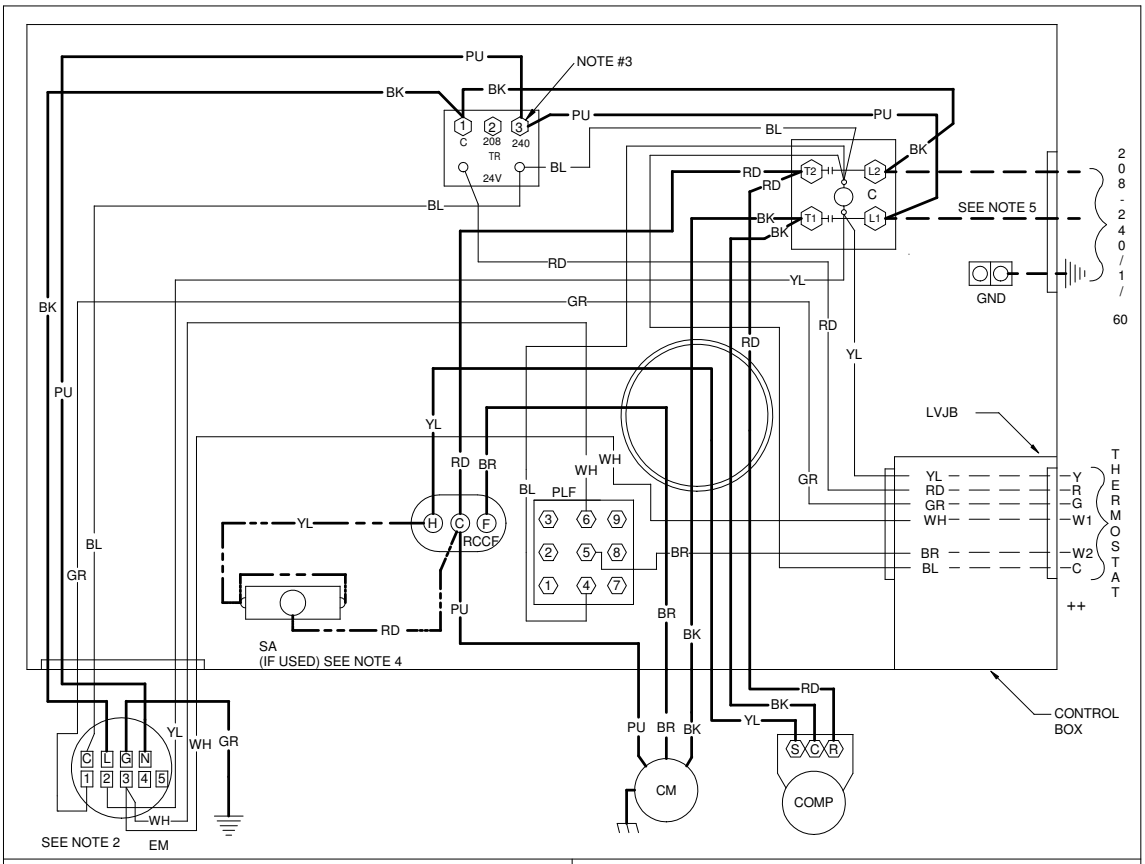

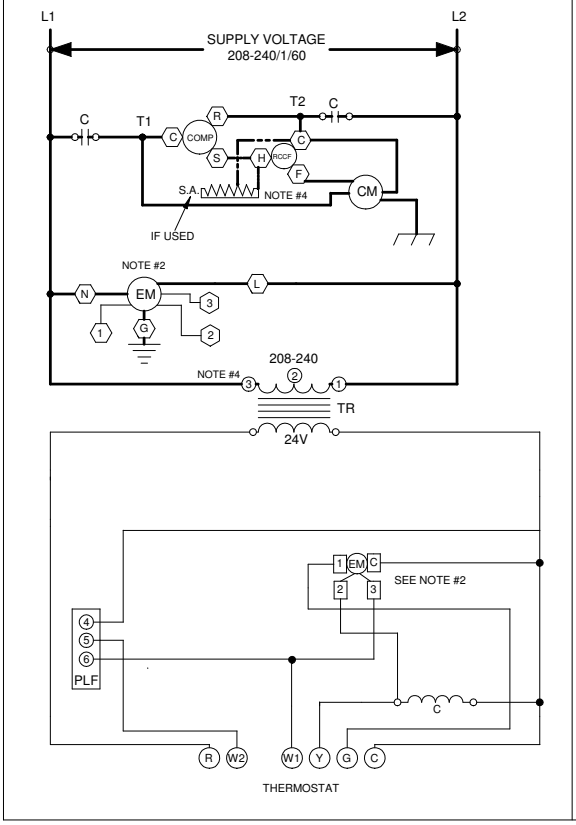

COMPONENT LEGEND

C	CONTACTOR
CM	CONDENSER MOTOR
COMP	COMPRESSOR
EM	EVAPORATOR MOTOR
GND	EQUIPMENT GROUND
LVJB	LOW VOLTAGE JUNCTION BOX
PLF	FEMALE PLUG / CONNECTOR
RCCF	RUN CAPACITOR FOR COMPRESSOR AND FAN
SA	START ASSIST
TR	TRANSFORMER

FACTORY WIRING
- LINE VOLTAGE
- LOW VOLTAGE
- OPTINAL HIGH VOLTAGE

FIELD WIRING
- HIGH VOLTAGE
- LOW VOLTAGE

WIRE CODE

BK	BLACK
BL	BLUE
BR	BROWN
GR	GREEN
OR	ORANGE
PU	PURPLE
RD	RED
WH	WHITE
YL	YELLOW

NOTES:

1. REPLACEMENT WIRE MUST BE SAME SIZE AND TYPE INSULATION AS ORIGINAL (AT LEAST 105°C) USE COPPER CONDUCTOR ONLY.
2. TO CHANGE EVAPORATOR MOTOR SPEED MOVE WHITE AND YELLOW LEADS FROM EM "2" AND "3" TO "4" AND "5". IF BOTH LEADS ARE ENERGIZED, THE HIGHER SPEED SETTING IS USED.
3. FOR 208 VOLT TRANSFORMER OPERATION MOVE PURPLE WIRES FROM TERMINAL 3 TO TERMINAL 2 ON TRANSFORMER.
4. START ASSIST FACTOR EQUIPED WHEN REQUIRED
5. USE COPPER CONDUCTORS ONLY.

++ USE N.E.C. CLASS 2 WIRE

SEE UNIT RATING PLATE FOR TYPE AND SIZE OF OVER CURRENT PROTECTION

208-240/1/60 0140G00407

WARNING **High Voltage:** Disconnect all power before servicing or installing this unit. Multiple power sources may be present. Failure to do so may cause property damage, personal injury, or death.

Wiring is subject to change. Always refer to the wiring diagram or the unit for the most up-to-date wiring.

Accessories

Accessory Description	Item Number	
	Small Chassis	Medium/Large Chassis
Downflow Economizer	PCE101-103	PCE101-103
Downflow Plenum Kit	PCP101-103	PCP101-103
Downflow Plenum Kit (R-8)	PCP101-103 R8	PCP101-103 R8
Elbow Flashing w/ R-8 Liner	PCEF101-103	PCEF101-103
Emergency Heat Relay	OT/EHR18-60	OT/EHR18-60
External Horizontal Filter Rack	GPGHFR101-103	GPGHFR101-103
Horizontal Economizer	PEHH101-103	PEHH101-103
Manual Damper	PCMD101-103	PCMD101-103
Manual Damper- Horizontal Application	PCMDH101-103	PCMDH101-103
Motorized Damper	PCMDM101-103	PCMDM101-103
Outdoor Thermostat w/ Lockout Stat	OT18-60A	OT18-60A
Roof Curb	PCCP101-103	PCCP101-103
Square to Round	SQRPC101	SQRPC102/103
Square to Round for Horizontal Application	SQRPCH101	SQRPCH102/103

Single-Point Kit Accessory Kits

Select the single-point kit accessory based on the unit model.

Model	Single-Point Kit
GPC1424H41C*	SPK-30
GPC1430H41C*	SPK-30
GPC1436H41C*	SPK-40
GPC1442H41C*	SPK-40
GPC1448H41C*	SPK-45
GPC1460H41C*	SPK-60

Notes

Amana® is a trademark of Maytag Corporation or its related companies and used under license to Goodman Company, L.P. All rights reserved. Our continuing commitment to quality products may mean a change in specifications without notice. © 2013 • Goodman Company, L.P. • Houston, Texas • Printed in the USA.