DAIKIN
AIR INTELLIGENCE

DBG Commercial

Base Efficiency Gas/Electric Packaged Rooftop Unit DBG Commercial 7.5 - 12.5 Nominal Tons

12.7 IEER / 11 EER

20 YEAR HEAT EXCHANGER LIMITED WARRANTY

5 YEAR PARTS LIMITED WARRANTY

C ETL LISTED US Intertek

AHRI CERTIFIED www.ahridirectory.org Unitary Small AC AHRI Standard 210/240

ISO 9001 QUALITY MANAGEMENT SYSTEM GLOBAL QUALITY STANDARDS

ISO 14001 CERTIFIED ENVIRONMENTAL MANAGEMENT SYSTEM

*Complete warranty details available from your local distributor or manufacturer's representative or at www.daikincomfort.com or www.daikinac.com

Supersedes 06/20

Our Perfect Package:

Harnessing energy-efficient performance, proven technology, and enhanced comfort for life.

Since becoming the first company in Japan to manufacture packaged air conditioning systems, in 1951, Daikin has supported comfortable indoor living based on the strengths and technologies that have led to the growth of the company becoming one of the world's largest manufacturers of HVAC products, systems and refrigerants.

Today, as a comprehensive global manufacturer of HVAC products and systems, the Daikin brand is committed to being recognized as a truly global and excellent company capable of continually creating new value for its customers. The company plans to pursue sustainable growth and foster business operations that consistently harmonize with the goals of improving indoor comfort.

The group philosophy of the company includes:

- Creating new value continuously for customers
- Developing world leading energy-saving technology
- Being a flexible and dynamic organization
- Allowing employees to be the driving force for the success of the company
- Fostering an atmosphere of best practices, boldness, and innovation
- Thinking and acting globally

Contents

2	**Introduction**	2
4	**Nomenclature**	4
5	**Features and Benefits**	5
	Applications	8
	Serviceability	8
9	**Product Specifications**	9
	AHRI Ratings	11
	Sound Data	11
	Expanding Cooling Data	13
	Heating Data	21
	Air Flow	22
	Electrical Data	27
	Wiring Diagrams	29
30	**Dimensional Data**	30
31	**Electrical Connections**	31
	Unit Clearances	32
	Installation	32
	Weights	32
28	**Accessories**	33
35	**Factory Installed Options**	35
36	**Field Installed Options**	36
36	**Factory and Field Installed Options**	36

Nomenclature

D	B	G	120	3	B	045	A	A	A	X	X	X	X	X	X	X	X	A	*
1	2	3	4,5,6	7	8	9,10,11	12	13	14	15	16	17	18	19	20	21	22	23	24

Revision Levels
Major & Minor

Brand
D Daikin

Configuration
B New Base Efficiency

Application
C Cooling
G Gas Heat
H Heat Pump

Nominal Cooling Capacity
090 7½ Tons
102 8½ Tons
120 10 Tons
150 12½ tons

Voltage
3 208-230/3/60
4 460/3/60
7 575/3/60

Supply Fan/Drive Type/Motor
V 2-speed Belt Drive - Standard Static
S 2-speed Belt Drive - High-Static

Nominal Heating Capacity

Gas/Electric	A/C Factory-Installed Electric Heat	
210 210,000 BTU/h	XXX	No Heat
	015	15 kW
	016	15 kW
	030	30 kW
	031	30 kW
	045	45 kW
	046	45 kW

See product specifications for heat size(s) available for each capacity.

Refrigeration Systems
C Two stage cooling modes

Heat Exchanger
X No options
A Standard Aluminized Exchanger
S Stainless Steel Exchanger

Controls
A Electromechanical controls

Sensors
X No Options
A RA Smoke Detector
B SA Smoke Detector
C RA & SA Smoke Detector

Hail guard
X No Options
C Hail Guard

Economizer
X No Options
A Ultra Low-Leak Downflow Economizer w/Enthalpy Sensor
B Low-Leak Downflow Economizer w/Enthalpy Sensor
G Ultra Low-Leak Downflow Economizer w/Dry Bulb Sensor
H Low-Leak Downflow Economizer w/Dry Bulb Sensor

Electrical
X No Options
A Non-Fused Disconnect
B Phase Monitor
C Thru-the-base connections
E Non-Fused Disconnect and Phase Monitor
F Non-Fused Disconnect and Thru-the-base connections
H Phase Monitor and Thru-the-base connections
L Non-Fused Disconnect, Thru-the-base connections and Phase Monitor

Service Options
X No Option
A Powered convenience outlet
B Non-powered convenience outlet
C Hinge Panels
D Hinged Panels and Powered convenience outlet
E Hinged Panels and non-powered convenience outlet

X No Options

Power Exhaust
X No Options
B Single point power connection for Power Exhaust

X No Options

Gas Stocking Models	
New Daikin 7.5-12.5 Ton Belt Drive	
Model Number	**Code String**
DBG0903VH00001S	DBG0903V210CAAXXXXXXXX
DBG0904VH00001S	DBG0904V210CAAXXXXXXXX
DBG0907VH00001S	DBG0907V210CAAXXXXXXXX
DBG1023VH00001S	DBG1023V210CAAXXXXXXXX
DBG1024VH00001S	DBG1024V210CAAXXXXXXXX
DBG1027VH00001S	DBG1027V210CAAXXXXXXXX
DBG1203VH00001S	DBG1203V210CAAXXXXXXXX
DBG1204VH00001S	DBG1204V210CAAXXXXXXXX
DBG1207VH00001S	DBG1207V210CAAXXXXXXXX
DBG1503VH00001S	DBG1503V210CAAXXXXXXXX
DBG1504VH00001S	DBG1504V210CAAXXXXXXXX
DBG1507VH00001S	DBG1507V210CAAXXXXXXXX

Daikin Packaged Rooftop Units are built to perform, with features and options that help provide lower installation and operating costs, superior indoor air quality, quiet operation, and longevity.

Installation

Daikin Packaged units are designed with an easier and faster installation in mind for both new construction and retrofit. Our packaged rooftop units are built to be a direct replacement for most rooftop units on the field without the need of a curb adapter, to be able to replace the unit in a shorter time and at a lower expense.

Cabinet Construction

Daikin packaged rooftop units are made with high quality galvanized steel with a powder-paint finish to provide higher corrosion resistance.

» Easy accessibility using our tool-less filter access

» The interior surface in the indoor air section is fully insulated to prevent sweating and thermal losses, using our foil face fiberglass insulation which also omits exposed filter fibers into the airstream.

» 1" Raised flanged edges around the supply and return offer easier installation for the duct connections.

» The full perimeter base rail is built using heavy gauge galvanized steel for a stronger structural installation. The base rails are a minimum of 3½" tall and include holes to allow for overhead rigging and lifting with forklifts.

» Electrical lines and gas lines can be brought through the base of the unit or through the horizontal knockout for easier installation and accessibility on the field.

Compressor

High performance, low noise scroll compressors to match the required total load for efficient part load control.

» Resiliently factory-mounted on rubber grommets for vibration isolation

» Refrigeration circuit includes both low- and high-pressure transducer, high pressure safety switch and temperature sensors for the suction and discharge lines.

» Unit is factory charged with environmentally friendly R-410A refrigerant.

» Compressor location outside the condenser section to avoid air bypass.

» Internal overload protection included with compressor.

» Dual single stage scroll compressor for partial load applications.

Supply Fan

Indoor fan motors are belt drive as standard to provide easy in the field belt and pulley adjustment for airflow control.

» Slide out forward curb fan for easier maintenance and replacement.

» High-Static drive options for application with high airflow/static requirements.

» Each fan assembly is dynamically trim balanced at the factory before shipment for quick start up and efficient operation.

» Motor with thermal overload and phase failure protection is provided for motor long lasting operation.

Coils

All units use large face area outdoor coils. These coils are constructed with seamless copper tubes, mechanically bonded into aluminum plate-type fins with full drawn collars to completely cover the tubes for high operating efficiencies.

The indoor coil section is installed in a draw through configuration to provide better dehumidification.

» Coils are factory pressure tested to ensure pressure and leak integrity.

» High- and low-pressure switches to be factory installed as fittings instead of brazed for easy removal and replacement.

» Copper tube / aluminum fin coils on condenser and evaporator

» 5mm Smart Coil Technology on all condenser coils for improved performance and reduced refrigerant load.

Controls and Wiring

Packaged rooftop units come equipped with a well-organized, large, easy to use, weatherproof internal control box with easy access, for a better user experience.

» Units are factory-wired with labeled color-coded wires and complete 24-volt Electromechanical controls package.

» Terminal blocks are provided as standard for easier installation and field power wiring.

Filtration

Unit provides a draw-through filter section as standard for better air quality and longer lasting component maintenance.

» Filters installed on the units are standard off the shelf sizes for easy replacement.

» One size filter per unit for lower maintenance cost and easy replacement.

» Tool-less filter access for easy and fast filter replacement and service.

Heating Section

Wide range of natural gas selections effectively handle most comfort heating demand from morning warm-up control to full heat, all available with Daikin's Wrinkle Bend heat exchanger technology.

Gas Furnace

ETL certified heating modules provide a custom match to specific design requirement.

» Wrinkle Bend Technology available on all Daikin gas heat exchangers. The Wrinkle Bend Technology reduces the manufacturing stress that leads to defects and pinholes in the tubes at the same time as it increases the gas turbulence to amplify the heat transfer.

» All 3-Phase models have a minimum 80% T.E. (Thermal Efficiency)

» User has the flexibility to order heat exchanger tubes with 20 Gauge, G160, aluminized steel or stainless steel to meet your application needs.

» The furnace has a tubular design with in-shot gas burner manifold and is installed downstream of the supply fan.

» The module contains an induced draft fan that will maintain a negative pressure in the heat exchanger tubes for the removal of the flue gases to protect indoor air quality.

» Each burner module provides flame roll-out safety protection switches and a high temperature limit switch for reliable operation.

» Induced draft fan includes an airflow safety switch to prevent heating operation in the event of no airflow for occupant safety.

» All burner assemblies are factory tested and adjusted prior to shipment.

» Heating control is fully integrated into the unit's control system for quick startup and reliable control.

» Optional field installed LP kits are available for staged heating modules as well as high altitude kits.

Electrical

Units are completely wired and tested at the factory to provide faster commissioning and start-up.

» Wiring complies with NEC requirements and all applicable UL standards.

» For ease of use, wiring and electrical components are number coded and labeled according to the electrical diagram.

» A 115 V GFI convenience outlet requiring independent power supply for the receptacle is optional.

» An optional unit powered 20 amp 115 V convenience outlet, complete with factory mounted transformer, disconnect switch, and primary and secondary overload protection, eliminates the need to pull a separate 115 V power source.

» Supply air fan, compressor, and condenser fan motor branch circuits have individual short circuit protection. Unit includes knockouts in the bottom of the main control panels for field wiring entrance.

» A single point power connection with power block is standard and a terminal board is provided for connecting low voltage control wiring.

» For better serviceability an optional non-fused disconnect switch can be installed inside the control panel and operated by an externally mounted handle to disconnect the electrical power at the unit.

DAIKIN

Applications

Daikin Rooftop units are intended for comfort cooling applications in normal heating, ventilating, and air conditioning. Consult your local Daikin sales representative for applications involving operations at high ambient temperatures, high altitudes, non-cataloged voltages, or for job specific unit selections that fall outside of the range of the catalog tables.

For proper operation, units should be rigged in accordance with instructions stated on the installation manual. Fire dampers, if required, must be installed in the ductwork according to local and/or state codes. No space is allowed for these dampers in the unit.

Follow factory check, test and start procedures explicitly to achieve satisfactory start-up and operation.

Most rooftop applications take advantage of the significant energy savings provided with economizer operation. When an economizer system is used, mechanical refrigeration is typically not required below an ambient temperature of 50°F.

Serviceability

Daikin packaged rooftop units are built with serviceability in mind, designed to make future maintenance and service on the unit easier and more accessible.

- Our packaged rooftop units offer a slide out blower to facilitate the access and removal of the fan.
- Filter panels on the small chassis line offer tool less access for easy maintenance.
- Independent compressor outside of the air bypass to eliminate component blockage and provide easy access.
- Labeled field connections, color coded and continuously marked wire to identify point-to-point component connections.
- All 7.5- 12.5 ton units are designed for convertible airflow orientation to serve downflow or horizontal applications. Every unit ships prepared to convert to horizontal orientation in the field if required.
- Condenser clean out from inside-out.
- Easy access to gas valves and control panel.

Model	DBG0903VH00001S	DBG0904VH00001S	DBG0907VH00001S
COOLING CAPACITY			
Total, BTU/h	86,000	86,000	86,000
SEER / EER	12.7/11	12.7/11	12.7/11
HEATING CAPACITY			
Heat Range	High	High	High
No. of Burners	7	7	7
High Stage Input / Output (KBTU/H)	210/168	210/168	210/168
Low Stage Input / Output (KBTU/H)	157/126	157/126	157/126
Thermal Efficiency (T.E.)	80	80	80
Annual Fuel Utilization Efficiency (AFUE)	–	–	–
High Stage Temperature Rise Range (°F)	35-65	35-65	35-65
Low Stage Temperature Rise Range (°F)	25-55	25-55	25-55
EVAPORATOR MOTOR COIL			
Motor Type	Belt-Drive	Belt-Drive	Belt-Drive
External Static Pressure (ESP)	Standard	Standard	Standard
Wheel Dia. X Width	15x12	15x12	15x12
Indoor Nominal CFM	3000	3000	3000
RPM	1740	1740	1745
Indoor Horsepower	2.00	2.00	2.00
Filter Size (in)	20 X 25 X 2 (4)	20 X 25 X 2 (4)	20 X 25 X 2 (4)
Drain Size (NPT)	¾	¾	¾
R-410A Refrigerant Charge (oz.)	80/78	80/78	80/78
Evaporator Coil Face Area (ft^2)	13.3	13.3	13.3
Rows Deep/ Fins per Inch	2 / 16	2 / 16	2 / 16
CONDENSER FAN/COIL			
Quantity of Condenser Fan Motors	2	2	2
RPM (High/Low stage)	1120	1050	1050
Outdoor Horsepower	0.33	0.33	0.33
Fan Diameter/ # Fan Blades	22 / 3	22 / 3	22 / 3
Face Area (ft^2)	22	22	22
Rows Deep / Fins per Inch	2 / 28	2 / 28	2 / 28
COMPRESSOR (ALL SINGLE-STAGE)			
Quantity / Type / Stages	2/ Scroll / 1	2/ Scroll / 1	2/ Scroll / 1
Compressor RLA / LRA	13.1/83.1	6.1/41	4.4/33
ELECTRICAL DATA			
Voltage-Phase-Frequency	208/230-3-60	460-3-60	208/230-3-60
Indoor Blower FLA	6	2.9	3.4
Max External Static (In. W.C.)	0.8	0.8	0.7
Outdoor Fan FLA	2	0.85	0.95
Min. Circuit Ampacity[1]	39.6/39.6	18.3	17.4/17.4
Max. Overcurrent Protection (A)[2]	50/50	20	25/25
Power Supply Conduit Hole Dia. (in)	1.375	1.375	1.125
Low-VoltageConduit Hole Dia. (in)	0.375	0.375	0.5
OPERATING WEIGHT (LBS.)			
Operating Weight (lbs)	1095	1095	1095
SHIPPING WEIGHT (LBS.)			
Ship Weight (lbs)	1175	1175	1175

[1] Wire size should be determined in accordance with National Electrical Codes. Extensive wire runs will require larger wire sizes.
[2] May use fuses or HACR-type circuit breakers of the same size as noted.
Note: Always check the S&R plate for electrical data on the unit being installed.

Model	DBG1023VH00001S	DBG1024VH00001S	DBG1027VH00001S
COOLING CAPACITY			
Total, BTU/h	97,000	97,000	97,000
SEER / EER	12.7/11	12.7/11	12.7/11
HEATING CAPACITY			
Heat Range	High	High	High
No. of Burners	7	7	7
High Stage Input / Output (KBTU/H)	210/168	210/168	210/168
Low Stage Input / Output (KBTU/H)	157/126	157/126	157/126
Thermal Efficiency (T.E.)	80	80	80
Annual Fuel Utilization Efficiency (AFUE)	–	–	–
High Stage Temperature Rise Range (°F)	30-60	30-60	30-60
Low Stage Temperature Rise Range (°F)	20-50	20-50	20-50
EVAPORATOR MOTOR COIL			
Motor Type	Belt-Drive	Belt-Drive	Belt-Drive
External Static Pressure (ESP)	Standard	Standard	Standard
Wheel Dia. X Width	15x12	15x12	15x12
Indoor Nominal CFM	3400	3400	3400
RPM	1740	1740	1745
Indoor Horsepower	2.00	2.00	2.00
Filter Size (in)	20 X 25 X 2 (4)	20 X 25 X 2 (4)	20 X 25 X 2 (4)
Drain Size (NPT)	¾	¾	¾
R-410A Refrigerant Charge (oz.)	85/87.5	85/87.5	85/87.5
Evaporator Coil Face Area (ft^2)	13.3	13.3	13.3
Rows Deep/ Fins per Inch	2 / 16	2 / 16	2 / 16
CONDENSER FAN/COIL			
Quantity of Condenser Fan Motors	2	2	2
RPM (High/Low stage)	1120	1050	1050
Outdoor Horsepower	0.33	0.33	0.33
Fan Diameter/ # Fan Blades	22 / 3	22 / 3	22 / 3
Face Area (ft^2)	28.2	28.2	28.2
Rows Deep / Fins per Inch	2 / 28	2 / 28	2 / 28
COMPRESSOR (ALL SINGLE-STAGE)			
Quantity / Type / Stages	2/ Scroll / 1	2/ Scroll / 1	2/ Scroll / 1
Compressor RLA / LRA	14.5/98	6.3/55	6/41
ELECTRICAL DATA			
Voltage-Phase-Frequency	208/230-3-60	460-3-60	575--3-60
Indoor Blower FLA	6	2.9	2.4
Max External Static (In. W.C.)	0.8	0.8	0.8
Outdoor Fan FLA	2	0.85	0.67
Min. Circuit Ampacity[1]	42.6/42.6	18.9	17.3
Max. Overcurrent Protection (A)[2]	50/50	25	20
Power Supply Conduit Hole Dia. (in)	1.375	1.375	1.375
Low-VoltageConduit Hole Dia. (in)	0.375	0.375	0.375
OPERATING WEIGHT (LBS.)			
Operating Weight (lbs)	1106	1106	1106
SHIPPING WEIGHT (LBS.)			
Ship Weight (lbs)	1186	1186	1186

[1] Wire size should be determined in accordance with National Electrical Codes. Extensive wire runs will require larger wire sizes.
[2] May use fuses or HACR-type circuit breakers of the same size as noted.
Note: Always check the S&R plate for electrical data on the unit being installed.

Model	DBG1203VH00001S	DBG1204VH00001S	DBG1207VH00001S
COOLING CAPACITY			
Total, BTU/h	114,000	114,000	114,000
SEER / EER	12.7/11	12.7/11	12.7/11
HEATING CAPACITY			
Heat Range	High	High	High
No. of Burners	7	7	7
High Stage Input / Output (KBTU/H)	210/168	210/168	210/168
Low Stage Input / Output (KBTU/H)	157/126	157/126	157/126
Thermal Efficiency (T.E.)	80	80	80
Annual Fuel Utilization Efficiency (AFUE)	–	–	–
High Stage Temperature Rise Range (°F)	25-55	25-55	25-55
Low Stage Temperature Rise Range (°F)	15-45	15-45	15-45
EVAPORATOR MOTOR COIL			
Motor Type	Belt-Drive	Belt-Drive	Belt-Drive
External Static Pressure (ESP)	Standard	Standard	Standard
Wheel Dia. X Width	15x15	15x15	15x15
Indoor Nominal CFM	3600	3600	3600
RPM	1740	1740	1745
Indoor Horsepower	2.00	2.00	2.00
Filter Size (in)	20 X 20 X 2 (4)	20 X 20 X 2 (4)	20 X 20 X 2 (4)
Drain Size (NPT)	¾	¾	¾
R-410A Refrigerant Charge (oz.)	103.5/103	103.5/103	103.5/103
Evaporator Coil Face Area (ft^2)	11	11	11
Rows Deep/ Fins per Inch	4 / 16	4 / 16	4 / 16
CONDENSER FAN/COIL			
Quantity of Condenser Fan Motors	2	2	2
RPM (High/Low stage)	1120	1050	1050
Outdoor Horsepower	0.33	0.33	0.33
Fan Diameter/ # Fan Blades	22 / 3	22 / 3	22 / 3
Face Area (ft^2)	31.3	31.3	31.3
Rows Deep / Fins per Inch	2 / 28	2 / 28	2 / 28
COMPRESSOR (ALL SINGLE-STAGE)			
Quantity / Type / Stages	2/ Scroll / 1	2/ Scroll / 1	2/ Scroll / 1
Compressor RLA / LRA	16/110	7.8/52	5.7/38.9
ELECTRICAL DATA			
Voltage-Phase-Frequency	208/230-3-60	460-3-60	575--3-60
Indoor Blower FLA	6	2.9	2.4
Max External Static (In. W.C.)	0.8	0.8	0.8
Outdoor Fan FLA	2	0.85	0.67
Min. Circuit Ampacity[1]	45.9/45.9	22.1	16.6
Max. Overcurrent Protection (A)[2]	60/60	25	20
Power Supply Conduit Hole Dia. (in)	1.375	1.375	1.375
Low-VoltageConduit Hole Dia. (in)	0.375	0.375	0.375
OPERATING WEIGHT (LBS.)			
Operating Weight (lbs)	1150	1150	1150
SHIPPING WEIGHT (LBS.)			
Ship Weight (lbs)	1230	1230	1230

[1] Wire size should be determined in accordance with National Electrical Codes. Extensive wire runs will require larger wire sizes.
[2] May use fuses or HACR-type circuit breakers of the same size as noted.
Note: Always check the S&R plate for electrical data on the unit being installed.

Model	DBG1503VH00001S	DBG1504VH00001S	DBG1507VH00001S
COOLING CAPACITY			
Total, BTU/h	140,000	140,000	140,000
SEER / EER	12.2/10.8	12.2/10.8	12.2/10.8
HEATING CAPACITY			
Heat Range	High	High	High
No. of Burners	7	7	7
High Stage Input / Output (KBTU/H)	210/168	210/168	210/168
Low Stage Input / Output (KBTU/H)	157/126	157/126	157/126
Thermal Efficiency (T.E.)	80	80	80
Annual Fuel Utilization Efficiency (AFUE)	–	–	–
High Stage Temperature Rise Range (°F)	30-60	30-60	30-60
Low Stage Temperature Rise Range (°F)	20-50	20-50	20-50
EVAPORATOR MOTOR COIL			
Motor Type	Belt Drive	Belt Drive	Belt Drive
External Static Pressure (ESP)	Standard	Standard	Standard
Wheel Dia. X Width	15x15	15x15	15x15
Indoor Nominal CFM	4400	4400	4400
RPM	1760	1760	1760
Indoor Horsepower	3.00	3.00	3.00
Filter Size (in)	20 X 25 X 2 (4)	20 X 25 X 2 (4)	20 X 25 X 2 (4)
Drain Size (NPT)	¾	¾	¾
R-410A Refrigerant Charge (oz.)	230/246	230/246	230/246
Evaporator Coil Face Area (ft²)	14.7	14.7	14.7
Rows Deep/ Fins per Inch	4 / 16	4 / 16	4 / 16
CONDENSER FAN/COIL			
Quantity of Condenser Fan Motors	2	2	2
RPM (High/Low stage)	1130	1115	1075
Outdoor Horsepower	0.5	0.5	0.5
Fan Diameter/ # Fan Blades	22 / 3	22 / 3	22 / 3
Face Area (ft²)	40.1	40.1	40.1
Rows Deep / Fins per Inch	3/ 20	3/ 20	3/ 20
COMPRESSOR (ALL SINGLE-STAGE)			
Quantity / Type / Stages	2/ Scroll / 1	2/ Scroll / 1	2/ Scroll / 1
Compressor RLA / LRA	19/123	9.7/62	7.4/50
ELECTRICAL DATA			
Voltage-Phase-Frequency	208/230-3-60	460-3-60	575--3-60
Indoor Blower FLA	9.1	4.3	3.5
Max External Static (In. W.C.)	0.8	0.8	0.8
Outdoor Fan FLA	2.7	1.4	1
Min. Circuit Ampacity[1]	57.3/57.3	29	22.2
Max. Overcurrent Protection (A)[2]	70/70	35	25
Power Supply Conduit Hole Dia. (in)	1.375	1.375	1.375
Low-VoltageConduit Hole Dia. (in)	0.375	0.375	0.375
OPERATING WEIGHT (LBS.)			
Operating Weight (lbs)	1288	1288	1288
SHIPPING WEIGHT (LBS.)			
Ship Weight (lbs)	1368	1368	1368

[1] Wire size should be determined in accordance with National Electrical Codes. Extensive wire runs will require larger wire sizes.
[2] May use fuses or HACR-type circuit breakers of the same size as noted.
Note: Always check the S&R plate for electrical data on the unit being installed.

AHRI Ratings

Gas / Electric				
Nominal Tonnage	Cooling Capacity (BTU/hr)	EER	IEER	Charge Stg1/Stg2
7.5	86,000	11	12.7	80/78
8.5	97,000	11	12.7	85/87.5
10	114,000	11	12.7	103.5/103
12.5	140,000	10.8	12.2	230/246

Sound Data

Model	Outdoor Sound (dB) at 60 Hz								
	A-Weighted	63	125	250	500	1000	2000	4000	8000
90	83	91.5	84.1	82.0	79.7	77.6	75.2	71.7	69.0
102	80	89.1	81.1	78.7	77.1	76.1	70.8	66.5	64.1
120	82	91.9	82.8	81.9	79.1	76.9	72.9	68.3	66.0
150	83	92.3	87.8	83.0	80.4	78.2	73.8	70.1	62.6

Notes:
[1] Outdoor sound data is measued in accordance with AHRI standard 270.
[2] Measurements are expressed in terms of sound power. Do not compare these values to sound pressure values because sound pressure depends on specific environment factors which normally do not match individual applications. Sound power values are independent of the environment and therefore more accurate.
[3] A-weighted sound ratings filter out high and very low frequencies, to better approximate the response of "average" human ear. A-weighted measurements for Daikin units are taken in accordance with AHRI standard 270.

			Outdoor Ambient Temperature																							
			65				75				85				95				105				115			
			Entering Indoor Wet Bulb Temperature																							
IDB	Airflow	ID WB	59	63	67	71	59	63	67	71	59	63	67	71	59	63	67	71	59	63	67	71	59	63	67	71
70	2625	MBh	87.5	88.7	91.3	-	86.7	87.9	90.6	-	84.4	85.7	88.3	-	80.5	81.7	84.3	-	75.7	76.9	79.5	-	71.3	72.5	75.2	-
		S/T	0.70	0.58	0.41	-	0.71	0.60	0.42	-	0.74	0.61	0.43	-	0.76	0.63	0.44	-	0.77	0.66	0.45	-	0.81	0.66	0.46	-
		ΔT	18.63	16.91	13.69	-	18.59	16.86	13.65	-	18.83	17.11	13.89	-	18.57	16.85	13.63	-	18.34	16.62	13.40	-	19.42	17.69	14.48	-
		Hi PR	253	254	256	-	293	294	296	-	335	336	338	-	380	381	383	-	429	430	431	-	480	482	483	-
		Lo PR	116	117	120	-	123	124	127	-	129	131	134	-	134	136	139	-	139	141	144	-	146	147	150	-
	3000	MBh	88.6	89.9	92.5	-	87.9	89.1	91.7	-	85.6	86.8	89.4	-	81.6	82.9	85.5	-	76.8	78.1	80.7	-	72.5	73.7	76.3	-
		S/T	0.72	0.60	0.42	-	0.73	0.61	0.43	-	0.76	0.63	0.45	-	0.78	0.65	0.46	-	0.80	0.67	0.47	-	0.82	0.69	0.48	-
		ΔT	17.59	15.87	12.65	-	17.55	15.82	12.60	-	17.79	16.06	12.85	-	17.53	15.80	12.59	-	17.30	15.57	12.36	-	18.38	16.65	13.44	-
		Hi PR	255	256	258	-	295	296	298	-	337	338	340	-	382	383	385	-	431	432	434	-	483	484	485	-
		Lo PR	118	119	122	-	125	126	129	-	131	132	135	-	136	138	140	-	141	143	146	-	148	149	152	-
	3375	MBh	90.0	91.3	93.9	-	89.2	90.5	93.1	-	87.0	88.2	90.8	-	83.0	84.3	86.9	-	78.2	79.5	82.1	-	73.8	75.1	77.7	-
		S/T	0.73	0.62	0.43	-	0.76	0.63	0.44	-	0.78	0.65	0.46	-	0.80	0.67	0.47	-	0.82	0.69	0.49	-	0.86	0.72	0.50	-
		ΔT	16.72	14.99	11.78	-	16.67	14.95	11.73	-	16.91	15.19	11.97	-	16.65	14.93	11.71	-	16.42	14.70	11.48	-	17.50	15.78	12.56	-
		Hi PR	257	258	260	-	297	298	300	-	339	340	342	-	384	385	387	-	433	434	436	-	485	486	488	-
		Lo PR	120	121	124	-	127	128	131	-	133	134	137	-	138	139	142	-	143	145	147	-	150	151	154	-
75	2625	MBh	87.5	88.8	91.4	95.4	86.8	88.0	90.6	94.6	84.5	85.7	88.3	92.3	80.5	81.8	84.4	88.4	75.7	77.0	79.6	83.6	71.4	72.6	0.6	79.2
		S/T	0.80	0.69	0.53	0.36	0.83	0.74	0.53	0.41	0.83	0.74	0.54	0.38	0.85	0.75	0.56	0.42	0.88	0.80	0.58	0.45	0.89	0.81	0.61	0.46
		ΔT	22.42	20.70	17.48	14.1	22.38	20.65	17.43	14.1	22.62	20.89	17.68	14.3	22.36	20.63	17.42	14.1	22.13	20.40	17.19	13.9	23.21	21.48	18.27	14.9
		Hi PR	253	254	256	260.7	293	294	296	300.6	335	336	338	342.4	380	381	383	387.5	429	430	432	436.1	481	482	484	487.9
		Lo PR	116	117	120	125.3	123	124	127	132.3	129	131	134	138.5	134	136	139	143.7	140	141	144	148.8	146	147	150	155.3
	3000	MBh	88.7	89.9	92.5	96.5	87.9	89.1	91.8	95.8	85.6	86.9	89.5	93.5	81.7	**82.9**	85.5	89.5	76.9	78.1	80.7	84.7	72.5	73.7	76.4	80.3
		S/T	0.82	0.72	0.56	0.41	0.84	0.75	0.56	0.42	0.85	0.76	0.57	0.43	0.87	**0.78**	0.59	0.46	0.91	0.82	0.61	0.47	0.92	0.83	0.62	0.47
		ΔT	21.38	19.66	16.44	13.1	21.33	19.61	16.39	13.1	21.58	19.85	16.64	13.3	21.32	**19.59**	16.38	13.0	21.09	19.36	16.15	12.8	22.17	20.44	17.22	13.9
		Hi PR	256	257	258	262.8	295	297	298	302.7	337	338	340	344.6	382	**383**	385	389.7	431	432	434	438.2	483	484	486	490.1
		Lo PR	118	119	122	127.0	125	126	129	134.0	131	132	135	140.2	136	**138**	140	145.4	141	143	146	150.5	148	149	152	157.0
	3375	MBh	90.1	91.3	93.9	97.9	89.3	90.5	93.1	97.1	87.0	0.8	90.9	94.8	83.1	84.3	86.9	90.9	78.3	79.5	82.1	86.1	73.9	75.1	77.7	81.7
		S/T	0.84	0.74	0.58	0.44	0.84	0.77	0.58	0.45	0.87	0.73	0.61	0.47	0.89	0.80	0.62	0.49	0.93	0.85	0.63	0.51	0.95	0.85	0.65	0.49
		ΔT	20.50	18.78	15.56	12.2	20.46	18.73	15.52	12.2	20.70	18.98	15.76	12.4	20.44	18.72	15.50	12.2	20.21	18.49	15.27	11.9	21.29	19.57	16.35	13.0
		Hi PR	258	259	260	264.9	298	299	300	304.8	339	340	342	346.7	384	386	387	391.7	433	434	436	440.3	485	486	488	492.2
		Lo PR	120	121	124	128.9	127	128	131	135.9	133	134	137	142.1	138	139	142	147.3	143	145	147	152.4	150	151	154	158.8

IDB: Entering Indoor Dry Bulb Temperature

Shaded area reflects ACCA (TVA) conditions

kW = Total system power

High and low pressures are measured at the liquid and suction access fittings.

Amps: Unit amps (comp.+ evaporator + condenser fan motors)

Design Subcooling, 16 - 19 °F @ the liquid access fitting connection ARI 95 test conditions. Design Superheat 8 - 12°F @ the compressor suction access fitting connection.

			Outdoor Ambient Temperature																							
			65				75				85				95				105				115			
			Entering Indoor Wet Bulb Temperature																							
IDB	Airflow	ID WB	59	63	67	71	59	63	67	71	59	63	67	71	59	63	67	71	59	63	67	71	59	63	67	71
80	2625	MBh	88.0	89.2	91.8	95.8	87.2	88.5	91.1	95.1	84.9	86.2	88.8	92.8	81.0	82.2	84.9	88.8	76.2	77.4	80.0	84.0	71.8	73.0	75.7	79.7
		S/T	0.89	0.83	0.64	0.47	0.89	0.84	0.68	0.50	0.92	0.86	0.70	0.54	0.94	0.89	0.71	0.52	0.98	0.92	0.75	0.57	0.98	0.92	0.76	0.59
		ΔT	26.24	24.51	21.30	18.0	26.19	24.47	21.25	17.9	26.43	24.71	21.49	18.2	26.17	24.45	21.23	17.9	25.94	24.22	21.00	17.7	27.02	25.30	22.08	18.7
		Hi PR	254	255	257	261.1	294	295	297	301.1	336	337	338	342.9	381	382	384	388.0	429	430	432	436.6	481	482	484	488.4
		Lo PR	116	118	121	125.8	124	125	128	132.8	130	131	134	139.0	135	136	139	144.2	140	141	144	149.4	146	148	151	155.8
	3000	MBh	89.1	90.4	93.0	97.0	88.4	89.6	92.2	96.2	86.1	87.3	89.9	93.9	82.1	83.4	**86.0**	90.0	77.3	78.6	81.2	85.2	73.0	74.2	76.8	80.8
		S/T	0.87	0.81	0.66	0.50	0.91	0.84	0.70	0.53	0.93	0.86	0.71	0.56	0.96	0.90	**0.72**	0.57	1.00	0.93	0.76	0.58	1.00	0.94	0.78	0.59
		ΔT	25.20	23.47	20.26	16.9	25.15	23.43	20.21	16.9	25.39	23.67	20.45	17.1	25.13	23.41	**20.19**	16.9	24.90	23.18	19.96	16.6	25.98	24.26	21.04	17.7
		Hi PR	256	257	259	263.3	296	297	299	303.2	338	339	341	345.1	383	384	**386**	390.1	431	433	434	438.7	483	484	486	490.6
		Lo PR	118	120	123	127.5	125	127	130	134.5	131	133	136	140.7	137	138	**141**	145.9	142	143	146	151.1	148	150	153	157.5
	3375	MBh	90.5	91.8	94.4	98.4	89.7	91.0	93.6	97.6	87.5	88.7	91.3	95.3	83.5	84.8	87.4	91.4	78.7	80.0	82.6	86.6	74.3	75.6	78.2	82.2
		S/T	0.92	0.86	0.69	0.53	0.95	0.89	0.72	0.52	0.99	0.89	0.75	0.59	1.00	0.94	0.77	0.61	1.00	0.98	0.80	0.63	1.00	1.00	0.81	0.68
		ΔT	24.32	22.60	19.38	16.0	24.27	22.55	19.33	16.0	24.51	22.79	19.57	16.2	24.25	22.53	19.31	16.0	24.02	22.30	19.08	15.8	25.10	23.38	20.16	16.8
		Hi PR	258	259	261	265.4	298	299	301	305.3	340	341	343	347.1	385	386	388	392.2	434	435	436	440.8	485	486	488	492.6
		Lo PR	120	121	124	129.4	127	129	131	136.4	133	135	138	142.6	138	140	143	147.8	144	145	148	152.9	150	151	154	159.4
85	2625	MBh	89.5	90.7	93.3	97.3	88.7	89.9	92.5	96.5	86.4	87.6	90.3	94.2	82.5	83.7	86.3	90.3	77.7	78.9	81.5	85.5	73.3	74.5	77.1	81.1
		S/T	0.91	0.88	0.80	0.64	0.95	0.90	0.81	0.70	0.96	0.92	0.84	0.71	1.00	0.96	0.86	0.71	1.00	1.00	0.91	0.72	1.00	1.00	0.91	0.74
		ΔT	29.62	27.90	24.68	21.3	29.57	27.85	24.63	21.3	29.82	28.09	24.87	21.5	29.56	27.83	24.61	21.3	29.33	27.60	24.38	21.1	30.40	28.68	25.46	22.1
		Hi PR	255	256	258	262.3	295	296	298	302.3	337	338	340	344.1	382	383	385	389.2	430	432	433	437.7	482	483	485	489.6
		Lo PR	118	120	123	127.5	125	127	130	134.6	131	133	136	140.7	137	138	141	146.0	142	143	146	151.1	148	150	153	157.5
	3000	MBh	90.6	91.9	94.5	98.5	89.8	91.1	93.7	97.7	87.6	88.8	91.4	95.4	83.6	84.9	87.5	91.5	78.8	80.1	82.7	86.7	74.4	75.7	78.3	82.3
		S/T	0.94	0.88	0.81	0.68	0.96	0.92	0.83	0.71	0.97	0.94	0.85	0.72	1.00	0.97	0.88	0.73	1.00	1.00	0.92	0.74	1.00	1.00	0.92	0.77
		ΔT	28.58	26.86	23.64	20.3	28.53	26.81	23.59	20.3	28.77	27.05	23.83	20.5	28.51	26.79	23.57	20.2	28.28	26.56	23.34	20.0	29.36	27.64	24.42	21.1
		Hi PR	257	258	260	264.5	297	298	300	304.4	339	340	342	346.3	384	385	387	391.3	433	434	435	439.9	484	486	487	491.7
		Lo PR	120	121	124	129.2	127	128	131	136.3	133	135	138	142.4	138	140	143	147.7	143	145	148	152.8	150	151	154	159.2
	3375	MBh	92.0	93.2	95.9	99.8	91.2	92.5	95.1	99.1	88.9	90.2	92.8	96.8	85.0	86.2	88.9	92.8	80.2	81.4	84.1	88.0	75.8	77.1	79.7	83.7
		S/T	0.96	0.92	0.83	0.70	1.00	0.96	0.87	0.72	1.00	1.00	0.90	0.73	1.00	1.00	0.92	0.78	1.00	1.00	0.97	0.80	1.00	1.00	0.98	0.82
		ΔT	27.70	25.98	22.76	19.4	27.66	25.93	22.71	19.4	27.90	26.17	22.96	19.6	27.64	25.91	22.70	19.4	27.41	25.68	22.47	19.1	28.49	26.76	23.55	20.2
		Hi PR	259	260	262	266.5	299	300	302	306.5	341	342	344	348.3	386	387	389	393.4	435	436	438	442.0	487	488	489	493.8
		Lo PR	122	123	126	131.1	129	130	133	138.2	135	136	139	144.3	140	142	145	149.6	145	147	150	154.7	152	153	156	161.1

IDB: Entering Indoor Dry Bulb Temperature

Shaded area reflects AHRI (TVA) conditions

kW = Total system power

High and low pressures are measured at the liquid and suction access fittings.

Amps: Unit amps (comp.+ evaporator + condenser fan motors)

Design Subcooling, 16 - 19 °F @ the liquid access fitting connection ARI 95 test conditions. Design Superheat 8 - 12°F @ the compressor suction access fitting connection.

			Outdoor Ambient Temperature																							
			65				75				85				95				105				115			
			Entering Indoor Wet Bulb Temperature																							
IDB	Airflow	ID WB	59	63	67	71	59	63	67	71	59	63	67	71	59	63	67	71	59	63	67	71	59	63	67	71
70	2975	MBh	98.7	100.1	103.0	-	97.8	99.2	102.1	-	95.2	96.6	99.6	-	90.8	92.2	95.1	-	85.4	86.8	89.7	-	80.4	81.8	84.8	-
		S/T	0.70	0.58	0.41	-	0.72	0.61	0.41	-	0.74	0.61	0.42	-	0.76	0.63	0.44	-	0.79	0.66	0.45	-	0.80	0.67	0.46	-
		ΔT	18.08	16.41	13.28	-	18.03	16.36	13.24	-	18.27	16.59	13.47	-	18.01	16.34	13.22	-	17.79	16.12	13.00	-	18.84	17.17	14.04	-
		Hi PR	255	256	258	-	295	296	298	-	337	339	340	-	383	384	386	-	432	433	435	-	484	485	487	-
		Lo PR	113	114	117	-	120	121	124	-	126	127	130	-	131	132	135	-	136	137	140	-	142	144	147	-
	3400	MBh	100.0	101.4	104.3	-	99.1	100.5	103.4	-	96.5	97.9	100.9	-	92.1	93.5	96.4	-	86.7	88.1	91.0	-	81.7	83.1	86.1	-
		S/T	0.72	0.61	0.42	-	0.74	0.62	0.45	-	0.77	0.65	0.45	-	0.80	0.67	0.47	-	0.83	0.68	0.49	-	0.82	0.69	0.48	-
		ΔT	17.07	15.40	12.27	-	17.02	15.35	12.23	-	17.26	15.58	12.46	-	17.00	15.33	12.21	-	16.78	15.11	11.99	-	17.83	16.16	13.03	-
		Hi PR	257	258	260	-	297	299	300	-	340	341	343	-	385	386	388	-	434	435	437	-	486	487	489	-
		Lo PR	115	116	119	-	122	123	126	-	128	129	132	-	133	134	137	-	138	139	142	-	144	145	148	-
	3825	MBh	101.5	102.9	105.9	-	100.7	102.1	105.0	-	98.1	99.5	102.4	-	93.6	95.0	98.0	-	88.2	89.6	92.6	-	83.3	84.7	87.6	-
		S/T	0.74	0.63	0.44	-	0.76	0.64	0.47	-	0.79	0.67	0.47	-	0.82	0.69	0.49	-	0.85	0.70	0.51	-	0.85	0.72	0.52	-
		ΔT	16.22	14.55	11.42	-	16.17	14.50	11.38	-	16.41	14.73	11.61	-	16.15	14.48	11.36	-	15.93	14.26	11.14	-	16.98	15.31	12.18	-
		Hi PR	259	260	262	-	300	301	302	-	342	343	345	-	387	388	390	-	436	437	439	-	488	489	491	-
		Lo PR	117	118	121	-	123	125	128	-	129	131	134	-	135	136	139	-	140	141	144	-	146	147	150	-
75	2975	MBh	98.7	100.1	103.1	107.6	97.9	99.3	102.2	106.7	95.3	96.7	99.6	104.1	90.9	92.2	95.2	99.7	85.4	86.8	89.8	94.3	80.5	81.9	84.8	89.3
		S/T	0.78	0.68	0.52	0.35	0.83	0.74	0.55	0.37	0.84	0.71	0.56	0.38	0.86	0.73	0.57	0.42	0.89	0.75	0.59	0.44	0.91	0.77	0.63	0.46
		ΔT	21.75	20.08	16.96	13.7	21.71	20.04	16.91	13.7	21.94	20.27	17.15	13.9	21.69	20.02	16.90	13.7	21.47	19.79	16.67	13.4	22.51	20.84	17.72	14.5
		Hi PR	255	256	258	262.6	296	297	298	302.9	338	339	341	345.0	383	384	386	390.4	432	433	435	439.4	484	485	487	491.6
		Lo PR	113	115	117	122.2	120	121	124	129.1	126	127	130	135.1	131	132	135	140.2	136	137	140	145.2	142	144	147	151.5
	3400	MBh	100.0	101.4	104.4	108.9	99.2	100.6	103.5	108.0	96.6	98.0	100.9	105.4	92.1	**93.5**	96.5	101.0	86.7	88.1	91.1	95.6	81.8	83.2	86.1	90.6
		S/T	0.82	0.71	0.56	0.37	0.85	0.72	0.58	0.39	0.86	0.73	0.59	0.40	0.88	**0.74**	0.60	0.44	0.91	0.77	0.61	0.45	0.94	0.81	0.64	0.47
		ΔT	20.74	19.07	15.95	12.7	20.70	19.03	15.90	12.7	20.93	19.26	16.14	12.9	20.68	**19.01**	15.89	12.7	20.46	18.78	15.66	12.4	21.50	19.83	16.71	13.5
		Hi PR	257	259	260	264.8	298	299	301	305.0	340	341	343	347.2	385	**386**	388	392.6	434	435	437	441.6	486	488	489	493.8
		Lo PR	115	116	119	123.9	122	123	126	130.7	128	129	132	136.8	133	**134**	137	141.9	138	139	142	146.9	144	145	148	153.1
	3825	MBh	101.6	103.0	105.9	110.4	100.7	102.1	105.1	109.6	98.1	99.5	102.5	107.0	93.7	95.1	98.0	102.5	88.3	89.7	92.6	97.1	83.3	84.7	87.7	92.2
		S/T	0.84	0.73	0.58	0.40	0.87	0.74	0.61	0.42	0.88	0.75	0.61	0.44	0.90	0.76	0.62	0.46	0.93	0.80	0.64	0.47	0.96	0.83	0.66	0.48
		ΔT	19.89	18.22	15.10	11.9	19.85	18.18	15.05	11.8	20.08	18.41	15.29	12.1	19.83	18.16	15.04	11.8	19.61	17.93	14.81	11.6	20.65	18.98	15.86	12.6
		Hi PR	260	261	262	266.9	300	301	303	307.1	342	343	345	349.3	387	388	390	394.7	436	437	439	443.7	489	490	491	495.9
		Lo PR	117	118	121	125.7	123	125	128	132.6	130	131	134	138.6	135	136	139	143.7	140	141	144	148.7	146	147	150	155.0

IDB: Entering Indoor Dry Bulb Temperature

Shaded area reflects ACCA (TVA) conditions

kW = Total system power

High and low pressures are measured at the liquid and suction access fittings.

Amps: Unit amps (comp.+ evaporator + condenser fan motors)

Design Subcooling, 16 - 19 °F @ the liquid access fitting connection ARI 95 test conditions. Design Superheat 8 - 12°F @ the compressor suction access fitting connection.

			Outdoor Ambient Temperature																							
			65				75				85				95				105				115			
			Entering Indoor Wet Bulb Temperature																							
IDB	Airflow	ID WB	59	63	67	71	59	63	67	71	59	63	67	71	59	63	67	71	59	63	67	71	59	63	67	71
80	2975	MBh	99.3	100.6	103.6	108.1	98.4	99.8	102.7	107.2	95.8	97.2	100.1	104.6	91.4	92.8	95.7	100.2	85.9	87.3	90.3	94.8	81.0	82.4	85.3	89.8
		S/T	0.86	0.81	0.67	0.50	0.90	0.85	0.68	0.53	0.92	0.86	0.70	0.53	0.95	0.89	0.72	0.55	1.00	0.92	0.75	0.56	1.00	0.94	0.76	0.57
		ΔT	25.45	23.78	20.66	17.4	25.41	23.74	20.61	17.4	25.64	23.97	20.85	17.6	25.39	23.72	20.60	17.4	25.17	23.50	20.37	17.1	26.21	24.54	21.42	18.2
		Hi PR	256	257	259	263.1	296	297	299	303.3	338	339	341	345.5	384	385	386	390.9	433	434	435	439.9	485	486	488	492.1
		Lo PR	114	115	118	122.7	120	122	125	129.6	127	128	131	135.6	132	133	136	140.7	137	138	141	145.7	143	144	147	152.0
	3400	MBh	100.6	101.9	104.9	109.4	99.7	101.1	104.0	108.5	97.1	98.5	101.4	105.9	92.7	94.1	**97.0**	101.5	87.2	88.6	91.6	96.1	82.3	83.7	86.6	91.1
		S/T	0.90	0.82	0.69	0.55	0.93	0.86	0.72	0.54	0.95	0.89	0.73	0.55	0.98	0.91	**0.74**	0.56	1.00	0.95	0.78	0.58	1.00	0.97	0.78	0.60
		ΔT	24.44	22.77	19.65	16.4	24.40	22.73	19.60	16.4	24.63	22.96	19.84	16.6	24.38	22.71	**19.59**	16.4	24.16	22.49	19.36	16.1	25.20	23.53	20.41	17.2
		Hi PR	258	259	261	265.3	298	299	301	305.5	340	341	343	347.7	386	387	**389**	393.1	435	436	438	442.0	487	488	490	494.3
		Lo PR	115	117	120	124.4	122	124	126	131.2	128	130	132	137.3	133	135	**138**	142.4	138	140	143	147.4	145	146	149	153.6
	3825	MBh	102.1	103.5	106.5	111.0	101.2	102.6	105.6	110.1	98.6	100.0	103.0	107.5	94.2	95.6	98.6	103.1	88.8	90.2	93.1	97.6	83.8	85.2	88.2	92.7
		S/T	0.93	0.84	0.72	0.58	0.95	0.88	0.75	0.57	0.97	0.91	0.75	0.57	1.00	0.93	0.77	0.58	1.00	0.97	0.80	0.60	1.00	1.00	0.81	0.62
		ΔT	23.59	21.92	18.80	15.6	23.55	21.88	18.75	15.5	23.78	22.11	18.99	15.8	23.53	21.86	18.74	15.5	23.31	21.64	18.51	15.3	24.35	22.68	19.56	16.3
		Hi PR	260	261	263	267.4	300	301	303	307.6	342	344	345	349.8	388	389	391	395.2	437	438	440	444.1	489	490	492	496.4
		Lo PR	117	119	121	126.2	124	125	128	133.1	130	131	134	139.1	135	137	139	144.2	140	142	144	149.2	146	148	151	155.5
85	2975	MBh	100.9	102.3	105.3	109.8	100.0	101.4	104.4	108.9	97.5	98.9	101.8	106.3	93.0	94.4	97.4	101.9	87.6	89.0	91.9	96.5	82.7	84.1	87.0	91.5
		S/T	0.91	0.87	0.80	0.64	0.95	0.91	0.82	0.66	0.96	0.93	0.85	0.66	0.96	0.93	0.85	0.68	0.98	0.96	0.90	0.73	1.00	0.98	0.89	0.71
		ΔT	28.74	27.06	23.94	20.7	28.69	27.02	23.90	20.7	28.93	27.25	24.13	20.9	28.67	27.00	23.88	20.6	28.45	26.78	23.66	20.4	29.50	27.82	24.70	21.5
		Hi PR	257	258	260	264.3	297	298	300	304.5	339	340	342	346.7	385	386	388	392.1	434	435	437	441.1	486	487	489	493.3
		Lo PR	115	117	120	124.4	122	124	126	131.3	128	130	132	137.3	133	135	138	142.4	138	140	143	147.4	145	146	149	153.6
	3400	MBh	102.2	103.6	106.6	111.1	101.3	102.7	105.7	110.2	98.8	100.1	103.1	107.6	94.3	95.7	98.7	103.2	88.9	90.3	93.2	97.7	84.0	85.3	88.3	92.8
		S/T	0.94	0.90	0.82	0.66	0.97	0.94	0.85	0.68	0.99	0.97	0.86	0.71	1.00	1.00	0.90	0.73	1.00	1.00	0.94	0.76	1.00	1.00	0.96	0.77
		ΔT	27.73	26.05	22.93	19.7	27.68	26.01	22.89	19.7	27.92	26.24	23.12	19.9	27.66	25.99	22.87	19.6	27.44	25.77	22.65	19.4	28.49	26.81	23.69	20.5
		Hi PR	259	260	262	266.5	299	300	302	306.7	342	343	344	348.9	387	388	390	394.3	436	437	439	443.2	488	489	491	495.5
		Lo PR	117	118	121	126.1	124	125	128	132.9	130	131	134	139.0	135	136	139	144.1	140	141	144	149.1	146	148	150	155.3
	3825	MBh	103.8	105.2	108.1	112.6	102.9	104.3	107.2	111.7	100.3	101.7	104.7	109.2	95.9	97.3	100.2	104.7	90.5	91.9	94.8	99.3	85.5	86.9	89.9	94.4
		S/T	0.93	0.92	0.84	0.66	0.99	0.96	0.87	0.70	1.00	0.99	0.88	0.73	1.00	1.00	0.92	0.75	1.00	1.00	0.96	0.77	1.00	1.00	0.98	0.73
		ΔT	26.88	25.20	22.08	18.8	26.83	25.16	22.04	18.8	27.06	25.39	22.27	19.0	26.81	25.14	22.02	18.8	26.59	24.92	21.80	18.6	27.64	25.96	22.84	19.6
		Hi PR	261	262	264	268.6	301	303	304	308.8	344	345	347	351.0	389	390	392	396.4	438	439	441	445.3	490	491	493	497.6
		Lo PR	119	120	123	127.9	126	127	130	134.8	132	133	136	140.8	137	138	141	145.9	142	143	146	150.9	148	149	152	157.2

IDB: Entering Indoor Dry Bulb Temperature

Shaded area reflects AHRI (TVA) conditions

kW = Total system power

High and low pressures are measured at the liquid and suction access fittings.

Amps: Unit amps (comp.+ evaporator + condenser fan motors)

Design Subcooling, 16 - 19 °F @ the liquid access fitting connection ARI 95 test conditions. Design Superheat 8 - 12°F @ the compressor suction access fitting connection.

			Outdoor Ambient Temperature																							
			65				75				85				95				105				115			
			Entering Indoor Wet Bulb Temperature																							
IDB	Airflow	ID WB	59	63	67	71	59	63	67	71	59	63	67	71	59	63	67	71	59	63	67	71	59	63	67	71
70	3150	MBh	116.0	117.6	121.1	-	114.9	116.6	120.0	-	111.9	113.6	117.0	-	106.7	108.3	111.8	-	100.3	102.0	105.4	-	94.5	96.2	99.6	-
		S/T	0.69	0.57	0.40	-	0.72	0.55	0.40	-	0.75	0.59	0.41	-	0.78	0.61	0.43	-	0.78	0.63	0.45	-	0.79	0.66	0.50	-
		ΔT	19.28	17.50	14.17	-	19.23	17.45	14.12	-	19.48	17.70	14.37	-	19.22	17.43	14.10	-	18.98	17.19	13.86	-	20.09	18.31	14.98	-
		Hi PR	250	252	253	-	290	291	293	-	331	332	334	-	376	377	379	-	424	425	427	-	475	476	478	-
		Lo PR	119	121	124	-	127	128	131	-	133	134	137	-	138	140	143	-	144	145	148	-	150	152	155	-
	3600	MBh	117.5	119.1	122.6	-	116.5	118.1	121.6	-	113.4	115.1	118.5	-	108.2	109.9	113.3	-	101.9	103.5	107.0	-	96.0	97.7	101.1	-
		S/T	0.71	0.58	0.44	-	0.73	0.57	0.44	-	0.74	0.60	0.47	-	0.77	0.62	0.49	-	0.81	0.64	0.51	-	0.82	0.69	0.56	-
		ΔT	18.20	16.42	13.09	-	18.16	16.37	13.04	-	18.41	16.62	13.29	-	18.14	16.35	13.03	-	17.90	16.12	12.79	-	19.02	17.23	13.90	-
		Hi PR	253	254	255	-	292	293	295	-	333	335	336	-	378	379	381	-	426	427	429	-	477	478	480	-
		Lo PR	121	123	126	-	128	130	133	-	135	136	139	-	140	142	145	-	145	147	150	-	152	153	156	-
	4050	MBh	119.3	121.0	124.4	-	118.3	119.9	123.4	-	115.3	116.9	120.4	-	110.1	111.7	115.2	-	103.7	105.3	108.8	-	97.9	99.5	103.0	-
		S/T	0.73	0.60	0.46	-	0.74	0.61	0.48	-	0.76	0.63	0.50	-	0.77	0.65	0.52	-	0.78	0.67	0.54	-	0.83	0.72	0.59	-
		ΔT	17.30	15.51	12.19	-	17.25	15.47	12.14	-	17.50	15.72	12.39	-	17.23	15.45	12.12	-	16.99	15.21	11.88	-	18.11	16.33	13.00	-
		Hi PR	255	256	257	-	294	295	297	-	336	337	338	-	380	381	383	-	428	429	431	-	479	481	482	-
		Lo PR	123	125	128	-	130	132	135	-	137	138	141	-	142	144	147	-	147	149	152	-	154	155	158	-
75	3150	MBh	116.0	117.7	121.2	126.4	115.0	116.6	120.1	125.4	112.0	113.6	117.1	122.4	106.8	108.4	111.9	117.2	100.4	102.0	105.5	110.8	94.6	96.2	99.7	105.0
		S/T	0.79	0.70	0.50	0.30	0.81	0.72	0.50	0.37	0.81	0.77	0.55	0.40	0.84	0.76	0.55	0.41	0.88	0.77	0.65	0.44	0.89	0.79	0.62	0.49
		ΔT	23.20	21.42	18.09	14.6	23.15	21.37	18.04	14.6	23.40	21.62	18.29	14.8	23.14	21.35	18.02	14.6	22.90	21.11	17.79	14.3	24.01	22.23	18.90	15.5
		Hi PR	251	252	253	257.9	290	291	293	297.4	332	333	334	338.8	376	377	379	383.4	424	425	427	431.4	476	477	478	482.7
		Lo PR	119	121	124	129.0	127	128	131	136.2	133	134	137	142.6	138	140	143	148.0	144	145	148	153.2	150	152	155	159.8
	3600	MBh	117.6	119.2	122.7	128.0	116.5	118.2	121.6	126.9	113.5	115.1	118.6	123.9	108.3	**109.9**	113.4	118.7	101.9	103.6	107.0	112.3	96.1	97.8	101.2	106.5
		S/T	0.81	0.72	0.56	0.42	0.83	0.75	0.57	0.4	0.83	0.79	0.59	0.45	0.86	**0.77**	0.61	0.5	0.91	0.82	0.69	0.49	0.93	0.84	0.67	0.54
		ΔT	22.13	20.34	17.01	13.6	22.08	20.29	16.96	13.5	22.33	20.54	17.21	13.8	22.06	**20.28**	16.95	13.5	21.82	20.04	16.71	13.3	22.94	21.15	17.82	14.4
		Hi PR	253	254	256	260.0	292	293	295	299.5	334	335	337	340.9	378	**379**	381	385.5	426	427	429	433.5	478	479	480	484.8
		Lo PR	121	123	126	130.7	128	130	133	138.0	135	136	139	144.3	140	**142**	145	149.7	145	147	150	155.0	152	153	157	161.6
	4050	MBh	119.4	121.0	124.5	129.8	118.4	120.0	123.5	128.8	115.3	117.0	120.4	125.7	110.1	111.8	115.2	120.5	103.8	105.4	108.9	114.2	97.9	99.6	103.0	108.3
		S/T	0.83	0.75	0.59	0.40	0.85	0.77	0.61	0.46	0.88	0.86	0.62	0.49	0.91	0.83	0.64	0.50	0.96	0.84	0.70	0.53	0.97	0.86	0.68	0.58
		ΔT	21.22	19.44	16.11	12.7	21.17	19.39	16.06	12.6	21.42	19.64	16.31	12.9	21.15	19.37	16.04	12.6	20.91	19.13	15.80	12.4	22.03	20.25	16.92	13.5
		Hi PR	255	256	258	262.1	294	295	297	301.6	336	337	339	343.0	380	381	383	387.5	428	429	431	435.6	480	481	483	486.9
		Lo PR	123	125	128	132.7	130	132	135	139.9	137	138	141	146.3	142	144	147	151.7	147	149	152	156.9	154	155	158	163.5

IDB: Entering Indoor Dry Bulb Temperature

Shaded area reflects ACCA (TVA) conditions

kW = Total system power

High and low pressures are measured at the liquid and suction access fittings.

Amps: Unit amps (comp.+ evaporator + condenser fan motors)

Design Subcooling, 16 - 19 °F @ the liquid access fitting connection ARI 95 test conditions. Design Superheat 8 - 12°F @ the compressor suction access fitting connection.

			Outdoor Ambient Temperature																							
			65				75				85				95				105				115			
			Entering Indoor Wet Bulb Temperature																							
IDB	Airflow	ID WB	59	63	67	71	59	63	67	71	59	63	67	71	59	63	67	71	59	63	67	71	59	63	67	71
80	3150	MBh	116.7	118.3	121.8	127.0	115.6	117.3	120.7	126.0	112.6	114.2	117.7	123.0	107.4	109.0	112.5	117.8	101.0	102.6	106.1	111.4	95.2	96.8	100.3	105.6
		S/T	0.87	0.79	0.62	0.49	0.90	0.83	0.63	0.49	0.92	0.85	0.65	0.52	0.94	0.87	0.67	0.54	0.97	0.91	0.75	0.56	1.00	0.96	0.74	0.61
		ΔT	27.15	25.37	22.04	18.6	27.10	25.32	21.99	18.5	27.35	25.57	22.24	18.8	27.08	25.30	21.97	18.5	26.85	25.06	21.73	18.3	27.96	26.18	22.85	19.4
		Hi PR	251	252	254	258.3	291	292	293	297.8	332	333	335	339.2	377	378	379	383.8	425	426	428	431.9	476	477	479	483.2
		Lo PR	120	121	124	129.5	127	129	132	136.7	134	135	138	143.1	139	140	143	148.5	144	146	149	153.8	151	152	155	160.4
	3600	MBh	118.2	119.8	123.3	128.6	117.1	118.8	122.2	127.5	114.1	115.7	119.2	124.5	108.9	110.5	**114.0**	119.3	102.5	104.2	107.6	112.9	96.7	98.4	101.8	107.1
		S/T	0.89	0.81	0.68	0.54	0.92	0.85	0.69	0.6	0.94	0.87	0.72	0.57	0.96	0.91	**0.73**	0.59	0.99	0.94	0.77	0.61	1.00	0.95	0.80	0.66
		ΔT	26.07	24.29	20.96	17.5	26.02	24.24	20.91	17.5	26.28	24.49	21.16	17.7	26.01	24.22	**20.89**	17.4	25.77	23.98	20.66	17.2	26.88	25.10	21.77	18.3
		Hi PR	253	254	256	260.5	293	294	296	300.0	334	335	337	341.4	379	380	**382**	385.9	427	428	430	434.0	478	479	481	485.3
		Lo PR	122	123	126	131.2	129	130	133	138.5	135	137	140	144.9	141	142	**145**	150.2	146	147	150	155.5	153	154	157	162.1
	4050	MBh	120.0	121.6	125.1	130.4	119.0	120.6	124.1	129.4	115.9	117.6	121.0	126.3	110.7	112.4	115.8	121.1	104.4	106.0	109.5	114.8	98.5	100.2	103.6	108.9
		S/T	0.92	0.84	0.71	0.58	0.94	0.87	0.72	0.58	0.96	0.87	0.74	0.61	0.98	0.89	0.76	0.6	1.00	0.96	0.79	0.65	1.00	1.00	0.83	0.70
		ΔT	25.17	23.38	20.05	16.6	25.12	23.33	20.00	16.6	25.37	23.58	20.26	16.8	25.10	23.32	19.99	16.5	24.86	23.08	19.75	16.3	25.98	24.19	20.86	17.4
		Hi PR	255	256	258	262.5	295	296	298	302.0	336	337	339	343.4	381	382	384	388.0	429	430	432	436.1	480	481	483	487.4
		Lo PR	124	125	128	133.2	131	132	135	140.4	137	139	142	146.8	143	144	147	152.2	148	149	152	157.5	154	156	159	164.1
85	3150	MBh	118.6	120.2	123.7	129.0	117.6	119.2	122.7	128.0	114.5	116.2	119.6	124.9	109.3	111.0	114.4	119.7	103.0	104.6	108.1	113.4	97.1	98.8	102.2	107.5
		S/T	0.90	0.86	0.76	0.62	0.93	0.88	0.78	0.6	0.95	0.93	0.85	0.67	1.00	0.95	0.85	0.68	1.00	0.98	0.87	0.72	1.00	0.99	0.89	0.7
		ΔT	30.65	28.87	25.54	22.1	30.60	28.82	25.49	22.0	30.85	29.07	25.74	22.3	30.58	28.80	25.47	22.0	30.35	28.56	25.23	21.8	31.46	29.68	26.35	22.9
		Hi PR	252	253	255	259.5	292	293	295	299.0	333	334	336	340.4	378	379	381	385.0	426	427	429	433.1	477	478	480	484.4
		Lo PR	122	123	126	131.3	129	130	133	138.5	135	137	140	144.9	141	142	145	150.3	146	147	150	155.5	153	154	157	162.2
	3600	MBh	120.1	121.8	125.2	130.5	119.1	120.7	124.2	129.5	116.1	117.7	121.2	126.5	110.9	112.5	116.0	121.2	104.5	106.1	109.6	114.9	98.7	100.3	103.8	109.1
		S/T	0.92	0.89	0.80	0.66	0.95	0.92	0.82	0.67	0.97	0.94	0.85	0.69	1.00	0.98	0.88	0.72	1.00	1.00	0.90	0.75	1.00	1.00	0.92	0.76
		ΔT	29.57	27.79	24.46	21.0	29.53	27.74	24.41	21.0	29.78	27.99	24.66	21.2	29.51	27.72	24.39	20.9	29.27	27.49	24.16	20.7	30.39	28.60	25.27	21.8
		Hi PR	254	256	257	261.6	294	295	297	301.1	335	336	338	342.5	380	381	383	387.1	428	429	431	435.2	479	480	482	486.5
		Lo PR	123	125	128	133.0	131	132	135	140.3	137	139	142	146.7	142	144	147	152.0	148	149	152	157.3	154	156	159	163.9
	4050	MBh	122.0	123.6	127.1	132.4	120.9	122.6	126.0	131.3	117.9	119.5	123.0	128.3	112.7	114.3	117.8	123.1	106.3	108.0	111.4	116.7	100.5	102.1	105.6	110.9
		S/T	0.96	0.91	0.83	0.68	0.97	0.94	0.84	0.70	1.00	0.96	0.87	0.70	1.00	1.00	0.90	0.74	1.00	1.00	0.92	0.76	1.00	1.00	0.94	0.79
		ΔT	28.67	26.88	23.55	20.1	28.62	26.84	23.51	20.1	28.87	27.09	23.76	20.3	28.60	26.82	23.49	20.0	28.36	26.58	23.25	19.8	29.48	27.70	24.37	20.9
		Hi PR	256	258	259	263.7	296	297	299	303.2	337	338	340	344.6	382	383	385	389.2	430	431	433	437.3	481	482	484	488.5
		Lo PR	125	127	130	135.0	133	134	137	142.2	139	140	144	148.6	144	146	149	154.0	150	151	154	159.2	156	158	161	165.9

IDB: Entering Indoor Dry Bulb Temperature

Shaded area reflects AHRI (TVA) conditions

kW = Total system power

High and low pressures are measured at the liquid and suction access fittings.

Amps: Unit amps (comp.+ evaporator + condenser fan motors)

Design Subcooling, 16 - 19 °F @ the liquid access fitting connection ARI 95 test conditions. Design Superheat 8 - 12°F @ the compressor suction access fitting connection.

			Outdoor Ambient Temperature																							
			65				75				85				95				105				115			
			Entering Indoor Wet Bulb Temperature																							
IDB	Airflow	ID WB	59	63	67	71	59	63	67	71	59	63	67	71	59	63	67	71	59	63	67	71	59	63	67	71
70	3850	MBh	142.4	144.4	148.7	155.2	141.2	143.2	147.4	153.9	137.4	139.5	143.7	150.2	131.0	133.1	137.3	143.8	123.2	125.2	129.5	136.0	116.1	118.1	122.3	128.8
		S/T	0.64	0.53	0.37	0.2	0.66	0.55	0.37	0.2	0.68	0.57	0.38	0.3	0.71	0.59	0.40	0.3	0.73	0.62	0.41	0.3	0.75	0.63	0.42	0.4
		ΔT	19.47	17.67	14.31	10.9	19.42	17.62	14.26	10.8	19.67	17.87	14.51	11.1	19.40	17.60	14.24	10.8	19.16	17.36	14.00	10.6	20.29	18.49	15.12	11.7
		Hi PR	242	243	245	249	280	282	283	287	321	322	323	327	364	365	366	370	410	411	413	416	460	461	462	466
		Lo PR	119	120	123	128	126	127	130	135	132	134	137	142	138	139	142	147	143	144	147	152	149	151	154	159
	4400	MBh	144.3	146.3	150.6	157.1	143.0	145.0	149.3	155.8	139.3	141.3	145.6	152.1	132.9	134.9	139.2	145.7	125.1	127.1	131.4	137.9	118.0	120.0	124.2	130.7
		S/T	0.65	0.56	0.42	0.3	0.67	0.58	0.43	0.3	0.69	0.60	0.44	0.3	0.72	0.62	0.46	0.3	0.74	0.65	0.47	0.4	0.76	0.66	0.48	0.4
		ΔT	18.38	16.58	13.22	9.8	18.33	16.53	13.17	9.7	18.58	16.78	13.42	10.0	18.31	16.51	13.15	9.7	18.07	16.27	12.91	9.5	19.20	17.40	14.04	10.6
		Hi PR	244	245	247	251	283	284	285	289	323	324	325	329	366	367	368	372	412	413	415	418	462	463	465	468
		Lo PR	120	122	125	130	128	129	132	137	134	136	139	143	139	141	144	149	145	146	149	154	151	153	156	160
	4950	MBh	146.6	148.6	152.8	159.3	145.3	147.3	151.5	158.0	141.6	143.6	147.8	154.3	135.2	137.2	141.4	147.9	127.3	129.4	133.6	140.1	120.2	122.2	126.5	133.0
		S/T	0.67	0.58	0.44	0.3	0.69	0.60	0.45	0.3	0.71	0.62	0.51	0.4	0.74	0.64	0.48	0.4	0.76	0.67	0.49	0.4	0.78	0.68	0.50	0.4
		ΔT	17.46	15.66	12.30	8.9	17.42	15.61	12.25	8.8	17.67	15.87	12.51	9.1	17.40	15.60	12.23	8.8	17.16	15.36	11.99	8.5	18.28	16.48	13.12	9.7
		Hi PR	246	247	249	253	285	286	287	291	325	326	327	331	368	369	370	374	414	415	417	420	464	465	467	470
		Lo PR	122	124	127	132	130	131	134	139	136	137	140	145	141	143	146	151	147	148	151	156	153	155	158	162
75	3850	MBh	142.5	144.5	148.8	155.3	141.2	143.3	147.5	154.0	137.5	139.5	143.8	150.3	131.1	133.1	137.4	143.9	123.3	125.3	129.6	136.1	116.2	118.2	122.4	128.9
		S/T	0.73	0.66	0.51	0.3	0.76	0.69	0.52	0.3	0.78	0.69	0.55	0.4	0.84	0.72	0.57	0.4	0.86	0.74	0.62	0.4	0.90	0.77	0.64	0.5
		ΔT	23.43	21.63	18.26	14.8	23.38	21.58	18.22	14.7	23.63	21.83	18.47	15.0	23.36	21.56	18.20	14.7	23.12	21.32	17.96	14.5	24.25	22.44	19.08	15.6
		Hi PR	242	243	245	249	281	282	283	288	321	322	323	328	364	365	367	371	410	411	413	417	460	461	463	467
		Lo PR	119	120	123	128	126	127	130	136	132	134	137	142	138	139	142	147	143	144	147	152	150	151	154	159
	4400	MBh	144.4	146.4	150.7	157.2	143.1	145.1	149.4	155.9	139.4	141.4	145.7	152.2	133.0	**135.0**	139.3	145.8	125.2	127.2	131.4	137.9	118.0	120.0	124.3	130.8
		S/T	0.72	0.66	0.54	0.33	0.75	0.69	0.56	0.34	0.77	0.72	0.54	0.35	0.80	**0.73**	0.60	0.39	0.82	0.76	0.64	0.41	0.90	0.84	0.67	0.43
		ΔT	22.34	20.54	17.18	13.7	22.29	20.49	17.13	13.6	22.54	20.74	17.38	13.9	22.27	**20.47**	17.11	13.6	22.03	20.23	16.87	13.4	23.16	21.36	18.00	14.5
		Hi PR	245	246	247	251	283	284	285	290	323	324	326	330	366	**367**	369	373	412	413	415	419	462	463	465	469
		Lo PR	121	122	125	130	128	129	132	137	134	136	139	144	139	**141**	144	149	145	146	149	154	151	153	156	161
	4950	MBh	146.6	148.6	152.9	159.4	145.4	147.4	151.6	158.1	141.6	143.7	147.9	154.4	135.2	137.3	141.5	148.0	127.4	129.4	133.7	140.2	120.3	122.3	126.5	133.0
		S/T	0.74	0.69	0.57	0.4	0.77	0.71	0.58	0.4	0.80	0.75	0.57	0.4	0.82	0.77	0.61	0.4	0.85	0.79	0.67	0.4	0.92	0.87	0.69	0.5
		ΔT	21.42	19.62	16.26	12.8	21.37	19.57	16.21	12.7	21.63	19.83	16.46	13.0	21.36	19.55	16.19	12.7	21.11	19.31	15.95	12.5	22.24	20.44	17.08	13.6
		Hi PR	247	248	249	253	285	286	287	292	325	326	328	332	368	369	371	375	414	415	417	421	464	465	467	471
		Lo PR	122	124	127	132	130	131	134	139	136	137	141	146	141	143	146	151	147	148	151	156	153	155	158	163

IDB: Entering Indoor Dry Bulb Temperature

Shaded area reflects ACCA (TVA) conditions

kW = Total system power

High and low pressures are measured at the liquid and suction access fittings.

Amps: Unit amps (comp.+ evaporator + condenser fan motors)

Design Subcooling, 16 - 19 °F @ the liquid access fitting connection ARI 95 test conditions. Design Superheat 8 - 12°F @ the compressor suction access fitting connection.

			Outdoor Ambient Temperature																							
			65				75				85				95				105				115			
			Entering Indoor Wet Bulb Temperature																							
IDB	Airflow	ID WB	59	63	67	71	59	63	67	71	59	63	67	71	59	63	67	71	59	63	67	71	59	63	67	71
80	3850	MBh	143.3	145.3	149.5	156.0	142.0	144.0	148.2	154.7	138.3	140.3	144.5	151.0	131.9	133.9	138.1	144.6	124.0	126.1	130.3	136.8	116.9	118.9	123.2	129.7
		S/T	80.00	0.75	0.62	0.5	0.83	0.79	0.64	0.5	0.85	0.81	0.65	0.5	0.87	0.82	0.67	0.5	0.92	0.86	0.72	0.5	0.99	0.93	0.77	0.6
		ΔT	27.41	25.61	22.25	18.8	27.36	25.56	22.20	18.7	27.62	25.82	22.45	19.0	27.34	25.54	22.18	18.7	27.10	25.30	21.94	18.5	28.23	26.43	23.07	19.6
		Hi PR	243	244	246	250	281	282	284	288	321	322	324	328	364	365	367	371	411	412	414	418	460	461	463	467
		Lo PR	119	121	124	129	127	128	131	136	133	134	137	142	138	140	143	148	143	145	148	153	150	151	155	160
	4400	MBh	145.1	147.1	151.4	157.9	143.9	145.9	150.1	156.6	140.1	142.1	146.4	152.9	133.7	135.7	**140.0**	146.5	125.9	127.9	132.2	138.7	118.8	120.8	125.0	131.5
		S/T	0.82	0.77	0.62	0.45	0.85	0.79	0.64	0.48	0.88	0.81	0.66	0.51	0.91	0.73	**0.71**	0.54	0.95	0.90	0.74	0.56	1.00	0.97	0.80	0.61
		ΔT	26.32	24.52	21.16	17.7	26.27	24.47	21.11	17.6	26.53	24.73	21.37	17.9	26.26	24.46	**21.09**	17.6	26.02	24.22	20.85	17.4	27.14	25.34	21.98	18.5
		Hi PR	245	246	248	252	283	284	286	290	323	324	326	330	366	367	**369**	373	413	414	416	420	462	463	465	469
		Lo PR	121	123	126	131	128	130	133	138	135	136	139	144	140	141	**144**	150	145	147	150	155	152	153	156	161
	4950	MBh	147.4	149.4	153.6	160.1	146.1	148.1	152.4	158.9	142.4	144.4	148.6	155.1	136.0	138.0	142.2	148.7	128.2	130.2	134.4	140.9	121.0	123.0	127.3	133.8
		S/T	0.84	0.79	0.65	0.5	0.87	0.83	0.67	0.5	0.90	0.83	0.68	0.5	0.93	0.76	0.73	0.6	0.97	0.93	0.77	0.6	1.00	1.00	0.84	0.6
		ΔT	25.41	23.61	20.25	16.8	25.36	23.56	20.20	16.7	25.61	23.81	20.45	17.0	25.34	23.54	20.18	16.7	25.10	23.30	19.94	16.5	26.23	24.43	21.07	17.6
		Hi PR	247	248	250	254	285	286	288	292	325	326	328	332	368	369	371	375	415	416	418	422	464	465	467	471
		Lo PR	123	124	127	133	130	132	135	140	137	138	141	146	142	143	146	151	147	149	152	157	154	155	158	163
85	3850	MBh	145.7	147.7	151.9	158.4	144.4	146.4	150.6	157.1	140.7	142.7	146.9	153.4	134.3	136.3	140.5	147.0	126.4	128.5	132.7	139.2	119.3	121.3	125.6	132.1
		S/T	0.82	0.79	0.72	0.6	0.85	0.82	0.74	0.6	0.89	0.86	0.76	0.6	0.90	0.86	0.78	0.6	0.93	0.90	0.82	0.7	0.94	0.93	0.83	0.7
		ΔT	30.95	29.15	25.78	22.3	30.90	29.10	25.74	22.3	31.15	29.35	25.99	22.5	30.88	29.08	25.72	22.2	30.64	28.84	25.48	22.0	31.77	29.96	26.60	23.1
		Hi PR	244	245	247	251	282	283	285	289	322	323	325	329	365	366	368	372	412	413	415	419	462	463	464	469
		Lo PR	121	123	126	131	128	130	133	138	135	136	139	144	140	141	144	150	145	147	150	155	152	153	156	161
	4400	MBh	147.5	149.5	153.8	160.3	146.3	148.3	152.5	159.0	142.5	144.5	148.8	155.3	136.1	138.1	142.4	148.9	128.3	130.3	134.6	141.1	121.2	123.2	127.4	133.9
		S/T	0.87	0.85	0.76	0.62	0.91	0.88	0.79	0.65	0.93	0.91	0.82	0.66	0.96	0.93	0.84	0.68	1.00	0.96	0.87	0.71	1.00	1.00	0.95	0.78
		ΔT	29.86	28.06	24.70	21.2	29.81	28.01	24.65	21.2	30.06	28.26	24.90	21.4	29.79	27.99	24.63	21.1	29.55	27.75	24.39	20.9	30.68	28.88	25.52	22.0
		Hi PR	246	247	249	253.1	284	285	287	291.3	324	325	327	331.3	367	369	370	374.5	414	415	417	420.9	464	465	466	470.6
		Lo PR	123	124	127	132.4	130	132	135	139.6	136	138	141	145.9	142	143	146	151.3	147	148	151	156.5	154	155	158	163.1
	4950	MBh	149.8	151.8	156.0	162.5	148.5	150.5	154.8	161.3	144.8	146.8	151.0	157.5	138.4	140.4	144.6	151.1	130.6	132.6	136.8	143.3	123.4	125.4	129.7	136.2
		S/T	0.89	0.87	0.78	0.6	0.93	0.90	0.81	0.7	0.95	0.93	0.85	0.7	0.98	0.95	0.86	0.7	1.00	0.98	0.89	0.7	1.00	1.00	0.97	0.8
		ΔT	28.94	27.14	23.78	20.3	28.89	27.09	23.73	20.2	29.15	27.35	23.98	20.5	28.88	27.07	23.71	20.2	28.63	26.83	23.47	20.0	29.76	27.96	24.60	21.1
		Hi PR	248	249	251	255	286	287	289	293	326	327	329	333	369	371	372	376	416	417	419	423	466	467	468	473
		Lo PR	125	126	129	134	132	133	136	142	138	140	143	148	144	145	148	153	149	150	153	158	155	157	160	165

IDB: Entering Indoor Dry Bulb Temperature

Shaded area reflects AHRI (TVA) conditions

kW = Total system power

High and low pressures are measured at the liquid and suction access fittings.

Amps: Unit amps (comp.+ evaporator + condenser fan motors)

Design Subcooling, 16 - 19 °F @ the liquid access fitting connection ARI 95 test conditions. Design Superheat 8 - 12°F @ the compressor suction access fitting connection.

Heating

Heating Rating Table - Natural Gas and Propane

Unit	Gas Heat	Input/Output (MBH)	Temp Rise High (°F)	Temp Rise Low (°F)	Thermal Efficiency (%)
DBG090	High	210/168	35-65		80%
	Low	157/126		25-55	
DBG102	High	210/168	30-60		80%
	Low	157/126		20-50	
DBG120	High	210/168	25-55		80%
	Low	157/126		15-45	
DBG150	High	210/168	20-50		80%
	Low	157/126		30-60	

Heat Exchanger and Burner Orifice Specifications

Unit	High Fire Rate Btu/Hr	Number of Burners	NG Orifice	LP Orifice
DBG090	210,000	7	37	55
DBG102	210,000	7	37	55
DBG120	210,000	7	37	55
DBG150	210,000	7	37	55

Recommended Min-Max Airflow Range

Unit	High Fire Rate Btu/Hr	Heating Minimum Scfm	Cooling Minimum Scfm	Maximum Scfm
DBG090	210,000	2250	2360	3690
DBG102	210,000	2550	2680	4230
DBG120	210,000	3000	3150	4860
DBG150	210,000	3750	3,940	6070

DBG090*V Standard Static Horizontal

ESP, In H2O	TURNS OPEN																	
	0			1			2			3			4			5		
	CFM	RPM	BHP	CFM	RPM	BHP	CFM	RPM	BHP	CFM	RPM	BHP	CFM	RPM	BHP	CFM	RPM	BHP
0.1	-	-	-	-	-	-	-	-	-				3557	704	1.13	3274	654	0.95
0.2	-	-	-	-	-	-	-	-	-	3689	748	1.22	3351	704	1.04	3065	654	0.86
0.3	-	-	-	-	-	-	-	-	-	3501	748	1.14	3129	704	0.95	2833	654	0.77
0.4	-	-	-	-	-	-	3563	792	1.32	3282	748	1.04	2891	704	0.85	2577	654	0.68
0.5	-	-	-	3693	840	1.80	3340	792	1.21	3032	748	0.94	2636	704	0.76	-	-	-
0.6	3731	885	1.87	3487	840	1.67	3104	792	1.09	2752	748	0.83	2364	704	0.66	-	-	-
0.7	3544	885	1.75	3268	840	1.54	2855	792	0.98	2440	748	0.72	-	-	-	-	-	-
0.8	3346	885	1.63	3038	840	1.41	2592	792	0.87	-	-	-	-	-	-	-	-	-

DBG090*S High-Static Horizontal[1]

ESP, In H2O	TURNS OPEN																	
	0			1			2			3			4			5		
	CFM	RPM	BHP	CFM	RPM	BHP	CFM	RPM	BHP	CFM	RPM	BHP	CFM	RPM	BHP	CFM	RPM	BHP
0.8	-	-	-	-	-	-	-	-	-	-	-	-	3654	941	1.83	3307	900	1.56
0.9	-	-	-	-	-	-	-	-	-	-	-	-	3479	941	1.72	3060	900	1.42
1.0	-	-	-	-	-	-	-	-	-	3705	977	2.05	3305	941	1.61	2813	900	1.28
1.1	-	-	-	-	-	-	-	-	-	3492	977	1.90	3130	941	1.51	2566	900	1.15
1.2	-	-	-	-	-	-	-	-	-	3273	977	1.75	2956	941	1.41	-	-	-
1.3	-	-	-	-	-	-	3567	1002	1.98	3047	977	1.60	2781	941	1.32	-	-	-
1.4	-	-	-	-	-	-	3353	1002	1.83	2816	977	1.46	2607	941	1.23	-	-	-
1.5	-	-	-	3654	1032	2.26	3128	1002	1.69	2578	977	1.33	2432	941	1.14	-	-	-
1.6	-	-	-	3452	1032	2.11	2893	1002	1.54	-	-	-	-	-	-	-	-	-
1.7	3718	1060	2.75	3242	1032	1.95	2648	1002	1.40	-	-	-	-	-	-	-	-	-
1.8	3514	1060	2.57	3023	1032	1.80	2392	1002	1.25	-	-	-	-	-	-	-	-	-

[1]To operate below 0.8" H_2O external static pressure, motor and blower sheave must be changed to VL40 and AK74 respectively, or equivalents

DBG090*V Standard Static Downshot

ESP, In H2O	TURNS OPEN																	
	0			1			2			3			4			5		
	CFM	RPM	BHP	CFM	RPM	BHP	CFM	RPM	BHP	CFM	RPM	BHP	CFM	RPM	BHP	CFM	RPM	BHP
0.1	-	-	-	-	-	-	-	-	-	3581	748	1.17	3274	704	1.01	2990	654	0.83
0.2	-	-	-	-	-	-	3753	792	1.43	3386	748	1.09	3068	704	0.92	2781	654	0.75
0.3	-	-	-	-	-	-	3473	792	1.28	3195	748	1.00	2845	704	0.83	2548	654	0.67
0.4	-	-	-	3612	840	1.75	3284	792	1.18	3027	748	0.94	2606	704	0.75	-	-	-
0.5	3627	885	1.80	3385	840	1.61	3041	792	1.06	2764	748	0.83	-	-	-	-	-	-
0.6	3449	885	1.69	3193	840	1.50	2792	792	0.95	2431	748	0.71	-	-	-	-	-	-
0.7	3261	885	1.58	2993	840	1.38	2586	792	0.87	-	-	-	-	-	-	-	-	-
0.8	3062	885	1.46	2807	840	1.28	-	-	-	-	-	-	-	-	-	-	-	-

DBG090*S High-Static Downshot[1]

ESP, In H2O	TURNS OPEN																	
	0			1			2			3			4			5		
	CFM	RPM	BHP	CFM	RPM	BHP	CFM	RPM	BHP	CFM	RPM	BHP	CFM	RPM	BHP	CFM	RPM	BHP
0.8	-	-	-	-	-	-	-	-	-	-	-	-	3371	941	1.65	3023	900	1.40
0.9	-	-	-	-	-	-	-	-	-	3630	977	1.99	3196	941	1.55	2776	900	1.26
1.0	-	-	-	-	-	-	-	-	-	3422	977	1.85	3021	941	1.45	2528	900	1.13
1.1	-	-	-	-	-	-	3681	1002	2.06	3209	977	1.71	2846	941	1.35	-	-	-
1.2	-	-	-	-	-	-	3488	1002	1.92	2989	977	1.57	2671	941	1.26	-	-	-
1.3	-	-	-	3752	1032	2.34	3284	1002	1.79	2763	977	1.43	2497	941	1.17	-	-	-
1.4	-	-	-	3566	1032	2.20	3069	1002	1.65	2531	977	1.30				-	-	-
1.5	-	-	-	3372	1032	2.05	2844	1002	1.51	-	-	-	-	-	-	-	-	-
1.6	3630	1060	2.67	3169	1032	1.90	2609	1002	1.37	-	-	-	-	-	-	-	-	-
1.7	3435	1060	2.50	2958	1032	1.76	2363	1002	1.24	-	-	-	-	-	-	-	-	-
1.8	3231	1060	2.33	2739	1032	1.61	-	-	-	-	-	-	-	-	-	-	-	-
0.8	3062	885	1.46	2807	840	1.28	-	-	-	-	-	-	-	-	-	-	-	-

[1]To operate below 0.8" H_2O external static pressure, motor and blower sheave must be changed to VL40 and AK74 respectively, or equivalents

DBG102*V Standard Static Horizontal

ESP, In H2O	TURNS OPEN																	
	0			1			2			3			4			5		
	CFM	RPM	BHP	CFM	RPM	BHP	CFM	RPM	BHP	CFM	RPM	BHP	CFM	RPM	BHP	CFM	RPM	BHP
0.1	-	-	-	-	-	-	-	-	-	4236	751	1.50	3970	705	1.33	3673	655	1.12
0.2	-	-	-	-	-	-	-	-	-	4073	751	1.41	3780	705	1.24	3478	655	1.04
0.3	-	-	-	-	-	-	4123	797	1.63	3888	751	1.32	3568	705	1.14	3244	655	0.94
0.4	-	-	-	-	-	-	3948	797	1.53	3681	751	1.22	3334	705	1.03	2972	655	0.83
0.5	-	-	-	-	-	-	3754	797	1.42	3451	751	1.12	3077	705	0.92	-	-	-
0.6	-	-	-	3937	840	1.96	3542	797	1.31	3199	751	1.01	2798	705	0.81	-	-	-
0.7	-	-	-	3729	840	1.82	3310	797	1.19	2925	751	0.89	-	-	-	-	-	-
0.8	3851	885	1.94	3507	840	1.68	3060	797	1.07	-	-	-	-	-	-	-	-	-

DBG102*S High-Static Horizontal[1]

ESP, In H2O	TURNS OPEN																	
	0			1			2			3			4			5		
	CFM	RPM	BHP	CFM	RPM	BHP	CFM	RPM	BHP	CFM	RPM	BHP	CFM	RPM	BHP	CFM	RPM	BHP
0.8	-	-	-	-	-	-	-	-	-	-	-	-	3958	952	2.25	3632	900	1.95
0.9	-	-	-	-	-	-	-	-	-	4218	1013	2.52	3789	952	2.12	3413	900	1.80
1.0	-	-	-	-	-	-	-	-	-	4053	1013	2.39	3621	952	2.00	3195	900	1.65
1.1	-	-	-	-	-	-	-	-	-	3887	1013	2.27	3453	952	1.89	2976	900	1.52
1.2	-	-	-	-	-	-	-	-	-	3722	1013	2.15	3285	952	1.77	2758	900	1.39
1.3	-	-	-	-	-	-	-	-	-	3557	1013	2.03	3116	952	1.66	-	-	-
1.4	-	-	-	-	-	-	3847	1070	2.85	3391	1013	1.91	2948	952	1.56	-	-	-
1.5	-	-	-	-	-	-	3678	1070	2.69	3226	1013	1.81	2780	952	1.46	-	-	-
1.6	-	-	-	-	-	-	3508	1070	2.55	3061	1013	1.70	-	-	-	-	-	-
1.7	-	-	-	3819	1123	2.90	3338	1070	2.40	2895	1013	1.60	-	-	-	-	-	-
1.8	-	-	-	3675	1123	2.77	3168	1070	2.26	2730	1013	1.50				-	-	-

[1]To operate below 0.8" H_20 external static pressure, motor and blower sheave must be changed to VL40 and AK74 respectively, or equivalents

DBG102*V Standard Static Downshot

ESP, In H2O	TURNS OPEN																	
	0			1			2			3			4			5		
	CFM	RPM	BHP	CFM	RPM	BHP	CFM	RPM	BHP	CFM	RPM	BHP	CFM	RPM	BHP	CFM	RPM	BHP
0.1	-	-	-				3832	797	1.47	3581	751	1.17	3274	705	1.01	2990	655	0.83
0.2	-	-	-	3926	840	1.96	3753	797	1.43	3386	751	1.09	3068	705	0.92	2781	655	0.75
0.3	-	-	-	3782	840	1.86	3473	797	1.28	3195	751	1.00	2845	705	0.83	-	-	-
0.4	-	-	-	3612	840	1.75	3284	797	1.18	3027	751	0.94	-	-	-	-	-	-
0.5	3627	885	1.80	3385	840	1.61	3041	797	1.06	2764	751	0.83	-	-	-	-	-	-
0.6	3449	885	1.69	3193	840	1.50	2792	797	0.95	-	-	-	-	-	-	-	-	-
0.7	3261	885	1.58	2993	840	1.38	-	-	-	-	-	-	-	-	-	-	-	-
0.8	3062	885	1.46	2807	840	1.28	-	-	-	-	-	-	-	-	-	-	-	-

DBG102*S High-Static Downshot[1]

ESP, In H2O	TURNS OPEN																	
	0			1			2			3			4			5		
	CFM	RPM	BHP	CFM	RPM	BHP	CFM	RPM	BHP	CFM	RPM	BHP	CFM	RPM	BHP	CFM	RPM	BHP
0.8	-	-	-	-	-	-	-	-	-	4102	1013	2.43	3675	952	2.04	3349	900	1.76
0.9	-	-	-	-	-	-	-	-	-	3936	1013	2.30	3507	952	1.92	3130	900	1.61
1.0	-	-	-	-	-	-	-	-	-	3771	1013	2.18	3338	952	1.81	2911	900	1.48
1.1	-	-	-	-	-	-	-	-	-	3605	1013	2.06	3170	952	1.70	2692	900	1.35
1.2	-	-	-	-	-	-	3905	1070	2.90	3439	1013	1.95	3001	952	1.59	-	-	-
1.3	-	-	-	-	-	-	3735	1070	2.75	3274	1013	1.84	2832	952	1.49	-	-	-
1.4	-	-	-	-	-	-	3565	1070	2.59	3108	1013	1.73	-	-	-	-	-	-
1.5	-	-	-	-	-	-	3395	1070	2.45	2942	1013	1.63	-	-	-	-	-	-
1.6	-	-	-	-	-	-	3225	1070	2.31	2777	1013	1.53	-	-	-	-	-	-
1.7	-	-	-	3536	1123	2.65	3055	1070	2.17	-	-	-	-	-	-	-	-	-
1.8	-	-	-	3393	1123	2.53	2885	1070	2.04	-	-	-	-	-	-	-	-	-
0.8	3062	885	1.46	2807	840	1.28	-	-	-	-	-	-	-	-	-	-	-	-

[1]To operate below 0.8" H_20 external static pressure, motor and blower sheave must be changed to VL40 and AK74 respectively, or equivalents

DBG120*V Standard Static Horizontal

ESP, In H2O	TURNS OPEN																	
	0			1			2			3			4			5		
	CFM	RPM	BHP	CFM	RPM	BHP	CFM	RPM	BHP	CFM	RPM	BHP	CFM	RPM	BHP	CFM	RPM	BHP
0.1	-	-	-	-	-	-	-	-	-	4350	744	1.56	4050	700	1.21	3750	652	1.06
0.2	-	-	-	-	-	-	-	-	-	4223	744	1.49	3923	700	1.16	3623	652	1.01
0.3	-	-	-	-	-	-	-	-	-	4084	744	1.42	3784	700	1.10	3484	652	0.96
0.4	-	-	-	-	-	-	4234	800	1.97	3934	744	1.35	3634	700	1.04	3334	652	0.90
0.5	-	-	-	-	-	-	4072	800	1.87	3772	744	1.27	3472	700	0.98	3172	652	0.84
0.6	-	-	-	4198	834	1.97	3898	800	1.76	3598	744	1.19	3298	700	0.91	-	-	-
0.7	-	-	-	4013	834	1.86	3713	800	1.65	3413	744	1.10	-	-	-	-	-	-
0.7	3865	883	1.97	3816	834	1.74	3516	800	1.54	3216	744	1.02	-	-	-	-	-	-

DBG120*S High-Static Horizontal[1]

ESP, In H2O	TURNS OPEN																	
	0			1			2			3			4			5		
	CFM	RPM	BHP	CFM	RPM	BHP	CFM	RPM	BHP	CFM	RPM	BHP	CFM	RPM	BHP	CFM	RPM	BHP
0.8	-	-	-	-	-	-	-	-	-	4861	1002	2.83	4392	947	2.42	3724	865	1.89
0.9	-	-	-	-	-	-	-	-	-	4719	1002	2.72	4234	952	2.31	3497	865	1.75
1.0	-	-	-	-	-	-	-	-	-	4562	1007	2.60	4055	952	2.18	3201	865	1.57
1.1	-	-	-	-	-	-	-	-	-	4390	1007	2.47	3854	953	2.05	-	-	-
1.2	-	-	-	-	-	-	-	-	-	4203	1007	2.34	3632	963	1.90	-	-	-
1.3	-	-	-	-	-	-	-	-	-	4000	1007	2.20	3388	963	1.75	-	-	-
1.4	-	-	-	-	-	-	-	-	-	3782	1009	2.05	-	-	-	-	-	-
1.5	-	-	-	-	-	-	4056	1070	2.90	3549	1018	1.90	-	-	-	-	-	-
1.6	-	-	-	-	-	-	3840	1070	2.72	3300	1018	1.75	-	-	-	-	-	-
1.7	-	-	-	-	-	-	3601	1070	2.52	-	-	-	-	-	-	-	-	-
1.8	-	-	-	-	-	-	3339	1070	2.32	-	-	-	-	-	-	-	-	-

[1]To operate below 0.8" H_2O external static pressure, motor and blower sheave must be changed to VL40 and AK74 respectively, or equivalents

DBG120*V Standard Static Downshot

ESP, In H2O	TURNS OPEN																	
	0			1			2			3			4			5		
	CFM	RPM	BHP	CFM	RPM	BHP	CFM	RPM	BHP	CFM	RPM	BHP	CFM	RPM	BHP	CFM	RPM	BHP
0.1	-	-	-	-	-	-	4150	800	1.91	3850	744	1.31	3550	700	1.01	3250	652	0.87
0.2	-	-	-	-	-	-	4023	800	1.84	3723	744	1.24	3423	700	0.96	-	-	-
0.3	-	-	-	4184	834	1.96	3884	800	1.75	3584	744	1.18	3284	700	0.91	-	-	-
0.4	-	-	-	4034	834	1.87	3734	800	1.67	3434	744	1.11	-	-	-	-	-	-
0.5				3872	834	1.77	3572	800	1.57	3272	744	1.04	-	-	-	-	-	-
0.6	3755	883	1.90	3698	834	1.67	3398	800	1.48	-	-	-	-	-	-	-	-	-
0.7	3560	883	1.77	3513	834	1.57	3213	800	1.38	-	-	-	-	-	-	-	-	-
0.8	3365	883	1.65	3316	834	1.46	-	-	-	-	-	-	-	-	-	-	-	-

DBG120*S High-Static Downshot[1]

ESP, In H2O	TURNS OPEN																	
	0			1			2			3			4			5		
	CFM	RPM	BHP	CFM	RPM	BHP	CFM	RPM	BHP	CFM	RPM	BHP	CFM	RPM	BHP	CFM	RPM	BHP
0.8	-	-	-	-	-	-	-	-	-	4092	1004	2.26	3483	961	1.81	-	-	-
0.9	-	-	-	-	-	-	-	-	-	3946	1004	2.16	3321	961	1.71	-	-	-
1.0	-	-	-	-	-	-	4179	1070	3.01	3790	1004	2.06	3173	961	1.62	-	-	-
1.1	-	-	-	-	-	-	4019	1070	2.87	3626	1004	1.95	-	-	-	-	-	-
1.2	-	-	-	-	-	-	3852	1070	2.73	3452	1004	1.84	-	-	-	-	-	-
1.3	-	-	-	-	-	-	3677	1070	2.58	3269	1004	1.73	-	-	-	-	-	-
1.4	-	-	-	3949	1097	3.00	3494	1070	2.44	-	-	-	-	-	-	-	-	-
1.5	-	-	-	3794	1097	2.86	3303	1070	2.29	-	-	-	-	-	-	-	-	-
1.6	-	-	-	3631	1097	2.72	-	-	-	-	-	-	-	-	-	-	-	-
1.7	-	-	-	3461	1097	2.57	-	-	-	-	-	-	-	-	-	-	-	-
1.8	3844	1168	3.03	3284	1097	2.42	-	-	-	-	-	-	-	-	-	-	-	-
0.8	3062	885	1.46	2807	840	1.28	-	-	-	-	-	-	-	-	-	-	-	-

[1]To operate below 0.8" H_2O external static pressure, motor and blower sheave must be changed to VL40 and AK74 respectively, or equivalents

DBG150*V Standard Static Horizontal

ESP, In H2O	TURNS OPEN																	
	0			1			2			3			4			5		
	CFM	RPM	BHP	CFM	RPM	BHP	CFM	RPM	BHP	CFM	RPM	BHP	CFM	RPM	BHP	CFM	RPM	BHP
0.1	-	-	-	5170	867	2.65	4876	823	2.41	4612	780	1.73	4283	732	1.52	3967	689	1.17
0.2	-	-	-	5036	867	2.56	4735	823	2.31	4451	780	1.64	4107	732	1.42	-	-	-
0.3	5201	908	2.99	4889	867	2.46	4578	823	2.20	4271	780	1.55	-	-	-	-	-	-
0.4	5051	908	2.87	4730	867	2.35	4404	823	2.09	4072	780	1.44	-	-	-	-	-	-
0.5	4890	908	2.74	4557	867	2.23	4213	823	1.97	-	-	-	-	-	-	-	-	-
0.6	4720	908	2.61	4372	867	2.11	4006	823	1.85	-	-	-	-	-	-	-	-	-
0.7	4540	908	2.47	4174	867	1.99	-	-	-	-	-	-	-	-	-	-	-	-
0.8	4349	908	2.33	3963	867	1.86	-	-	-	-	-	-	-	-	-	-	-	-

DBG150*S High-Static Horizontal[1]

ESP, In H2O	TURNS OPEN																	
	0			1			2			3			4			5		
	CFM	RPM	BHP	CFM	RPM	BHP	CFM	RPM	BHP	CFM	RPM	BHP	CFM	RPM	BHP	CFM	RPM	BHP
0.8	-	-	-	-	-	-	-	-	-	5457	1013	3.33	5338	991	3.20	4910	949	2.80
0.9	-	-	-	-	-	-	-	-	-	5296	1013	3.19	5160	991	3.05	4728	949	2.66
1.0	-	-	-	-	-	-	-	-	-	5118	1013	3.05	4963	991	2.89	4516	949	2.50
1.1	-	-	-	-	-	-	5578	1071	4.38	4923	1013	2.89	4745	991	2.72	4273	949	2.32
1.2	-	-	-	5551	1091	4.69	5383	1071	4.18	4711	1013	2.72	4507	991	2.54	4001	949	2.13
1.3	5576	1127	4.47	5363	1091	4.47	5174	1071	3.96	4482	1013	2.55	4250	991	2.36	-	-	-
1.4	5405	1127	4.29	5164	1091	4.25	4950	1071	3.73	4236	1013	2.37	3972	991	2.16	-	-	-
1.5	5230	1127	4.10	4953	1091	4.01	4711	1071	3.50	3973	1013	2.19	-	-	-	-	-	-
1.6	5052	1127	3.92	4731	1091	3.77	4458	1071	3.26	-	-	-	-	-	-	-	-	-
1.7	4870	1127	3.74	4498	1091	3.53	4189	1071	3.02	-	-	-	-	-	-	-	-	-
1.8	4684	1127	3.56	4253	1091	3.29	-	-	-	-	-	-	-	-	-	-	-	-

[1]To operate below 0.8" H_20 external static pressure, motor and blower sheave must be changed to VP44 and AK79 respectively, or equivalents

DBG150*V Standard Static Downshot

ESP, In H2O	TURNS OPEN																	
	0			1			2			3			4			5		
	CFM	RPM	BHP	CFM	RPM	BHP	CFM	RPM	BHP	CFM	RPM	BHP	CFM	RPM	BHP	CFM	RPM	BHP
0.1	5182	909	2.97	4921	869	2.72	4672	826	2.27	4354	781	1.59	4048	737	1.40	-	-	-
0.2	5047	909	2.86	4784	869	2.61	4506	826	2.16	4179	781	1.50	-	-	-	-	-	-
0.3	4901	909	2.75	4630	869	2.50	4327	826	2.05	3987	781	1.40	-	-	-	-	-	-
0.4	4744	909	2.63	4461	869	2.37	4136	826	1.93	-	-	-	-	-	-	-	-	-
0.5	4576	909	2.50	4275	869	2.24	3933	826	1.81	-	-	-	-	-	-	-	-	-
0.6	4397	909	2.37	4073	869	2.09	-	-	-	-	-	-	-	-	-	-	-	-
0.7	4206	909	2.23	-	-	-	-	-	-	-	-	-	-	-	-	-	-	-
0.8	4005	909	2.09	-	-	-	-	-	-	-	-	-	-	-	-	-	-	-

DBG150*S High-Static Downshot[1]

ESP, In H2O	TURNS OPEN																	
	0			1			2			3			4			5		
	CFM	RPM	BHP	CFM	RPM	BHP	CFM	RPM	BHP	CFM	RPM	BHP	CFM	RPM	BHP	CFM	RPM	BHP
0.8	5543	1127	4.48	5196	1091	4.05	4894	1071	3.68	4549	1013	2.84	3944	991	2.09	3767	949	1.95
0.9	5417	1127	4.34	5055	1091	3.91	4815	1071	3.61	4389	1013	2.71	3757	991	1.97	-	-	-
1.0	5283	1127	4.20	4903	1091	3.75	4710	1071	3.50	4223	1013	2.57	-	-	-	-	-	-
1.1	5141	1127	4.06	4741	1091	3.60	4579	1071	3.38	4050	1013	2.44	-	-	-	-	-	-
1.2	4992	1127	3.91	4568	1091	3.43	4423	1071	3.23	3871	1013	2.30	-	-	-	-	-	-
1.3	4834	1127	3.75	4385	1091	3.26	4241	1071	3.07	-	-	-	-	-	-	-	-	-
1.4	4669	1127	3.59	4191	1091	3.09	4034	1071	2.89	-	-	-	-	-	-	-	-	-
1.5	4496	1127	3.43	3987	1091	2.91	3802	1071	2.69	-	-	-	-	-	-	-	-	-
1.6	4315	1127	3.26	3772	1091	2.73	-	-	-	-	-	-	-	-	-	-	-	-
1.7	4126	1127	3.09	-	-	-	-	-	-	-	-	-	-	-	-	-	-	-
1.8	3929	1127	2.92	-	-	-	-	-	-	-	-	-	-	-	-	-	-	-

[1]To operate below 0.8" H_20 external static pressure, motor and blower sheave must be changed to VP44 and AK79 respectively, or equivalents

Electrical Data

Model Number	Electrical Rating	Compressor			Outdoor Fan Motor			Indoor Fan Motor			Optional Powered Convenience Outlet	Optional Power Exhaust	Power Supply	
		QTY	RLA	LRA	QTY	HP	FLA	Type	HP	FLA	FLA	FLA	MCA	MOP
DBG0903S	208/230/3/60	2	13.1	83.1	2	0.33	2	2-speed Belt-Drive High-Static	3	9.1	-	-	42.7/42.7	50/50
											9.6/8.7	-	52.3/51.4	60/60
											-	3.3/3.0	46.0/45.7	50/50
											9.6/8.7	3.3/3.0	55.6/54.4	60/60
DBG0903V	208/230/3/60	2	13.1	83.1	2	0.33	2	2-speed Belt-Drive Standard Static	2	6	-	-	39.6/39.6	50/50
											9.6/8.7	-	49.2/48.3	60/60
											-	3.3/3.0	42.9/42.6	50/50
											9.6/8.7	3.3/3.0	52.5/51.3	60/60
DBG0904S	208/230/3/60	2	6.1	41	2	0.33	0.85	2-speed Belt-Drive High-Static	3	4.3	-	-	19.7	25
											4.3	-	24	30
											-	1	20.7	25
											4.3	1	25	30
DBG0904V	460/3/60	2	6.1	41	2	0.33	0.85	2-speed Belt-Drive Standard Static	2	2.9	-	-	18.3	20
											4.3	-	22.6	25
											-	1	19.3	20
											4.3	1	23.6	25
DBG0907S	460/3/60	2	4.4	33	2	0.33	0.67	2-speed Belt-Drive High-Static	3	3.5	-	-	14.6	15
											3.5	-	18.1	20
											-	1.2	15.8	20
											3.5	1.2	19.3	20
DBG0907V	575/3/60	2	4.4	33	2	0.33	0.67	2-speed Belt-Drive Standard Static	2	2.4	-	-	13.5	15
											3.5	-	17	20
											-	1.2	14.7	15
											3.5	1.2	18.2	20
DBG1023S	575/3/60	2	14.5	98	2	0.33	2	2-speed Belt-Drive High-Static	3	9.1	-	-	45.7/45.7	60/60
											9.6/8.7	-	55.3/54.4	60/60
											-	3.3/3.0	49.0/48.7	60/60
											9.6/8.7	3.3/3.0	58.6/57.4	60/60
DBG1023V	208/230/3/60	2	14.5	98	2	0.33	2	2-speed Belt-Drive Standard Static	2	6	-	-	42.6/42.6	50/50
											9.6/8.7	-	52.2/51.3	60/60
											-	3.3/3.0	45.9/45.6	50/50
											9.6/8.7	3.3/3.0	55.5/54.3	60/60
DBG1024S	208/230/3/60	2	6.3	55	2	0.33	0.85	2-speed Belt-Drive High-Static	3	4.3	-	-	20.3	25
											4.3	-	24.6	30
											-	1	21.3	25
											4.3	1	25.6	30
DBG1024V	460/3/60	2	6.3	55	2	0.33	0.85	2-speed Belt-Drive Standard Static	2	2.9	-	-	18.9	25
											4.3	-	23.2	25
											-	1	19.9	25
											4.3	1	24.2	25
DBG1027S	460/3/60	2	6	41	2	0.33	0.67	2-speed Belt-Drive High-Static	3	3.5	-	-	18.4	20
											3.5	-	21.9	25
											-	1.2	19.6	20
											3.5	1.2	23.1	25
DBG1027V	575/3/60	2	6	41	2	0.33	0.67	2-speed Belt-Drive Standard Static	2	2.4	-	-	17.3	20
											3.5	-	20.8	25
											-	1.2	18.5	20
											3.5	1.2	22	25

Electrical Data

Model Number	Electrical Rating	Compressor			Outdoor Fan Motor			Indoor Fan Motor			Optional Powered Convenience Outlet	Optional Power Exhaust	Power Supply	
		QTY	RLA	LRA	QTY	HP	FLA	Type	HP	FLA	FLA	FLA	MCA	MOP
DBG1203S	208/230/3/60	2	16	110	2	0.33	2	2-speed Belt-Drive High-Static	3	9.1	-	-	49.0/49.0	60/60
											9.6/8.7	-	58.6/57.7	70/70
											-	3.3/3.0	52.3/52.0	60/60
											9.6/8.7	3.3/3.0	61.9/60.7	70/70
DBG1203V	208/230/3/60	2	7.8	52	2	0.33	0.85	2-speed Belt-Drive Standard Static	2	6	-	-	45.9/45.9	60/60
											9.6/8.7	-	55.5/54.6	70/70
											-	3.3/3.0	49.2/48.9	60/60
											9.6/8.7	3.3/3.0	58.8/57.6	70/70
DBG1204S	460/3/60	2	7.8	52	2	0.33	0.85	2-speed Belt-Drive High-Static	3	4.3	-	-	23.5	30
											4.3	-	27.8	35
											-	1	24.5	30
											4.3	1	28.8	35
DBG1204V	460/3/60	2	5.7	38.9	2	0.33	0.67	2-speed Belt-Drive Standard Static	2	2.9	-	-	22.1	25
											4.3	-	26.4	30
											-	1	23.1	25
											4.3	1	27.4	30
DBG1207S	575/3/60	2	5.7	38.9	2	0.33	0.67	2-speed Belt-Drive High-Static	3	3.5	-	-	17.7	20
											3.5	-	21.2	25
											-	1.2	18.9	20
												1.2	22.4	25
DBG1207V	575/3/60	2	5.7	38.9	2	0.33	0.67	2-speed Belt-Drive Standard Static	2	2.4	-	-	16.6	20
											3.5	-	20.1	25
												1.2	17.8	20
												1.2	21.3	25

Electrical Heat

Model Number	Electrical Rating	Compressor			Outdoor Fan Motor			Indoor Fan Motor			Optional Powered Convenience Outlet	Optional Power Exhaust	Power Supply	
		QTY	RLA	LRA	QTY	HP	FLA	Type	HP	FLA	FLA	FLA	MCA	MOP
DBG1503S	208/230/3/60	2	19	123	2	0.5	2.7	2-speed Belt Drive High-Static	5	14	-	-	62.2/62.2	80/80
											9.6/8.7	-	71.8/70.9	90/80
											-	3.3/3.0	65.5/65.2	80/80
											9.6/8.7	3.3/3.0	75.1/73.9	90/80
DBG1503V	208/230/3/60	2	19	123	2	0.5	2.7	2-speed Belt Drive Standard Static	3	9.1	-	-	57.3/57.3	70/70
											9.6/8.7	-	66.9/66.0	80/80
											-	3.3/3.0	60.6/60.3	70/70
											9.6/8.7	3.3/3.0	70.2/69.0	80/80
DBG1504S	460/3/60	2	9.7	62	2	0.5	1.4	2-speed Belt Drive High-Static	5	6.6	-	-	31.3	40
											4.3	-	35.6	45
											-	1	32.3	40
											4.3	1	36.6	45
DBG1504V	460/3/60	2	9.7	62	2	0.5	1.4	2-speed Belt Drive Standard Static	3	4.3	-	-	29	35
											4.3	-	33.3	40
											-	1	30	35
											4.3	1	34.3	40
DBG1507S	575/3/60	2	7.4	50	2	0.5	1	2-speed Belt Drive High-Static	5	5.2	-	-	23.9	30
											3.5	-	27.4	30
											-	1.2	25.1	30
											3.5	1.2	28.6	30
DBG1507V	575/3/60	2	7.4	50	2	0.5	1	2-speed Belt Drive Standard Static	3	3.5	-	-	22.2	25
											3.5	-	25.7	30
											-	1.2	23.4	25
											3.5	1.2	26.9	30

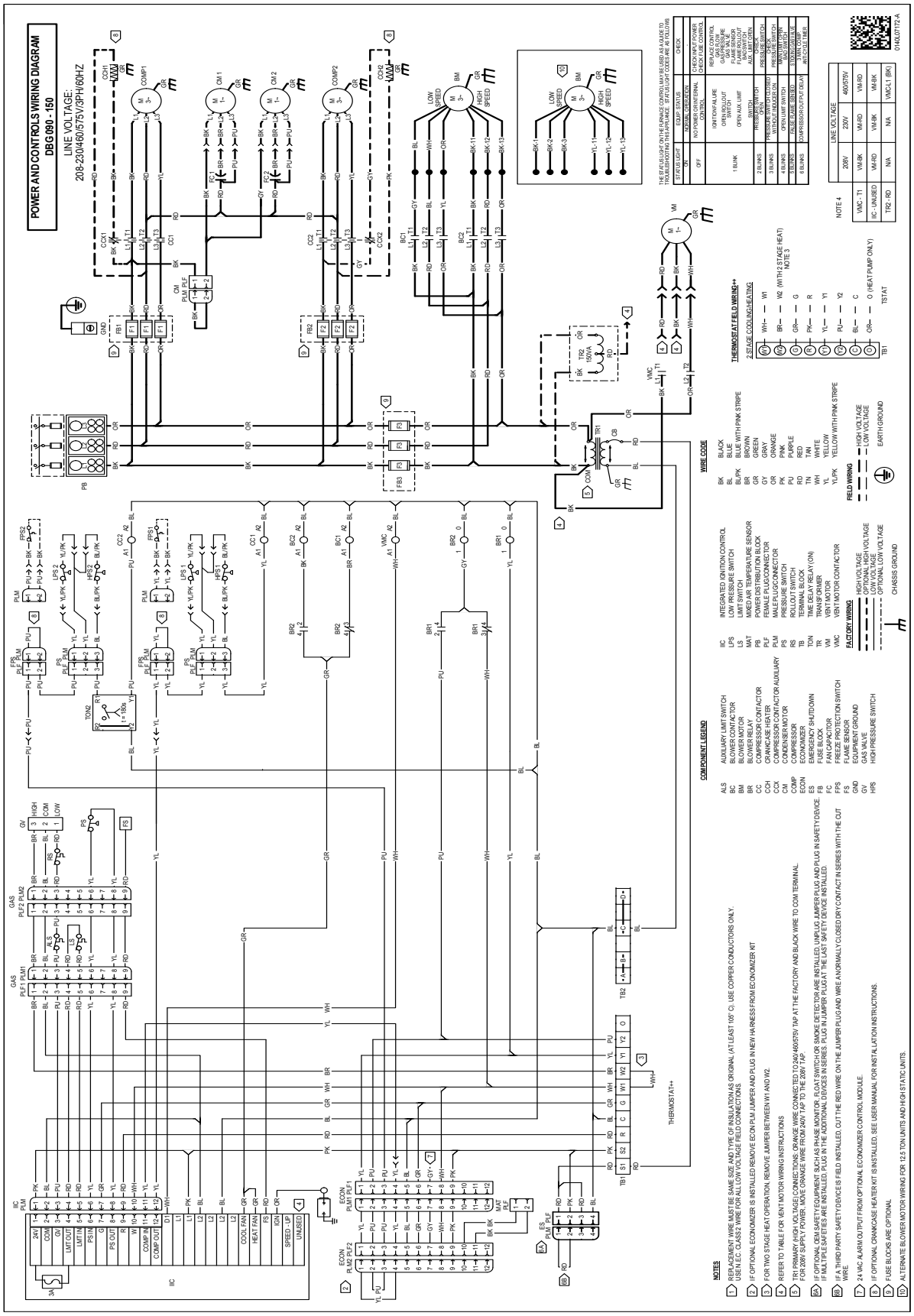

⚠ WARNING

High Voltage: Disconnect all power before servicing or installing this unit. Multiple power sources may be present. Failure to do so may cause property damage, personal injury, or death.

Wiring is subject to change. Always refer to the wiring diagram on the unit for the most up-to-date wiring.

Model Size	DIM "A"
DBG090-150	54 9/10

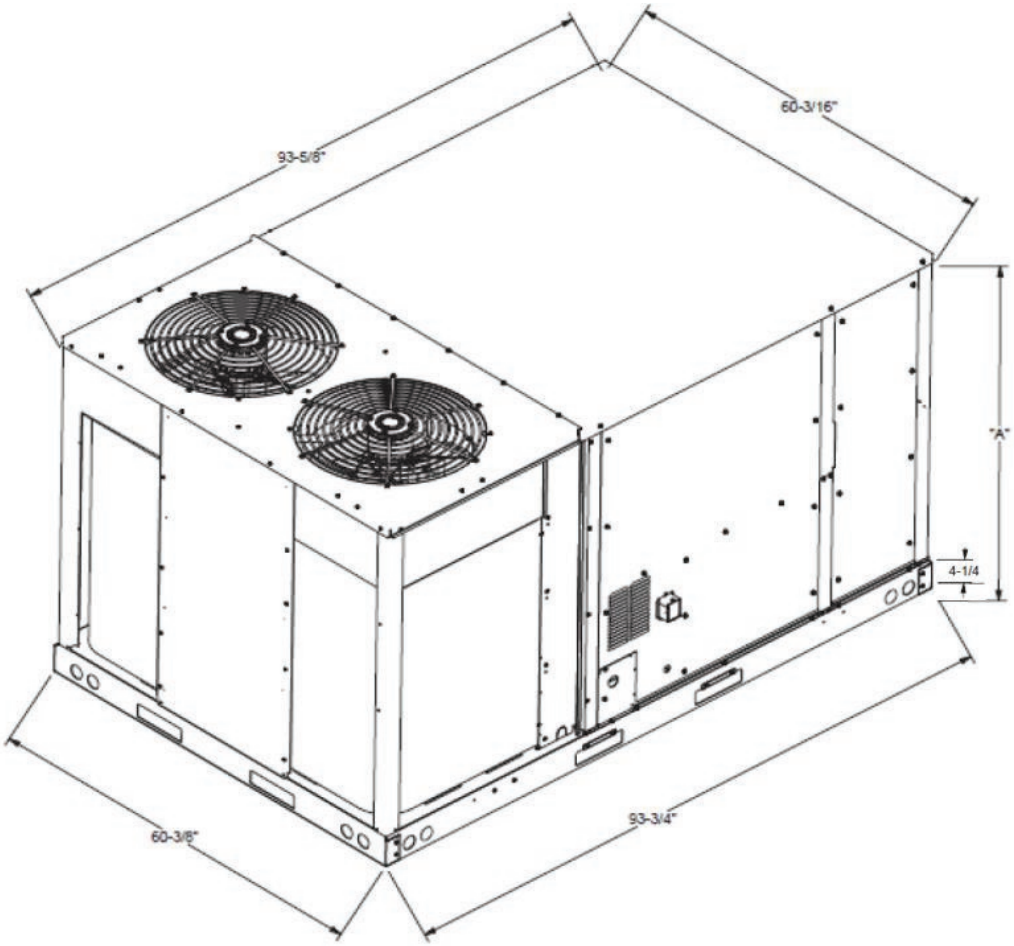

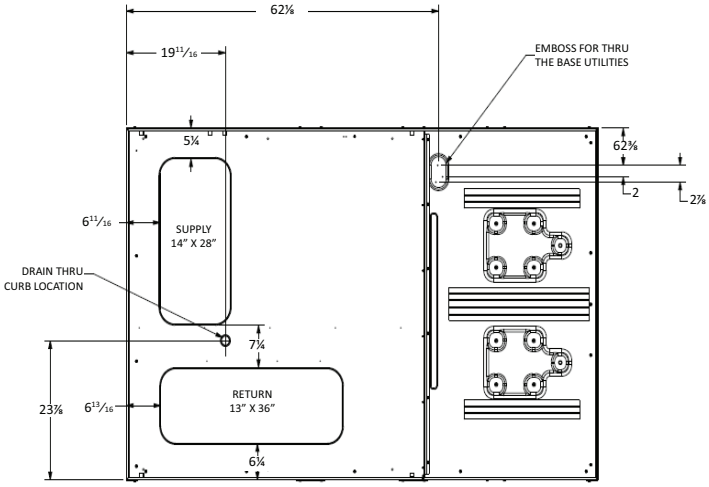

BOTTOM VIEW OF UNIT

VERTICAL DISCHARGE

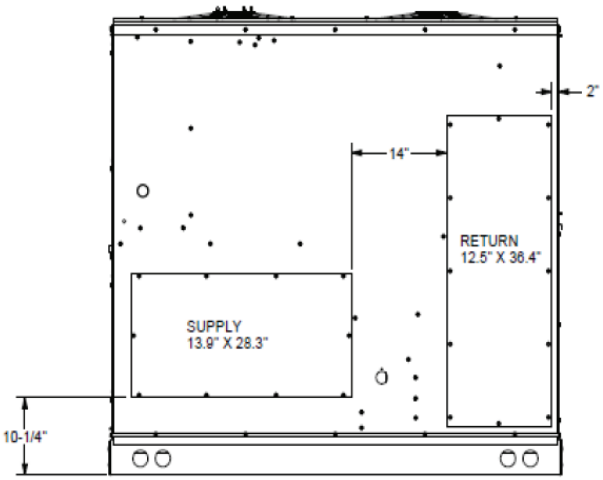

HORIZONTAL DISCHARGE

Electrical Connections

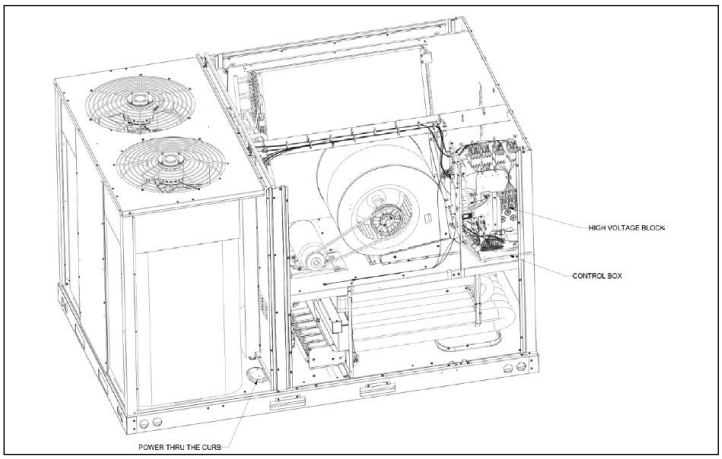

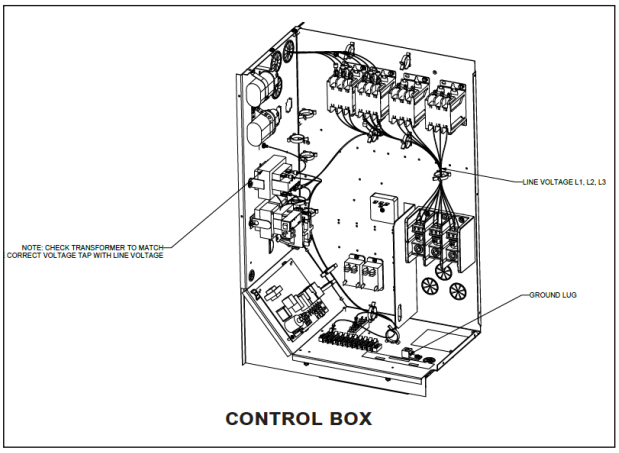

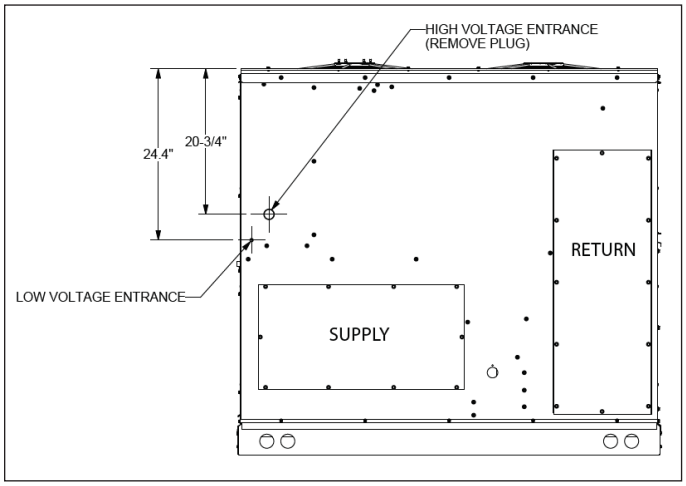

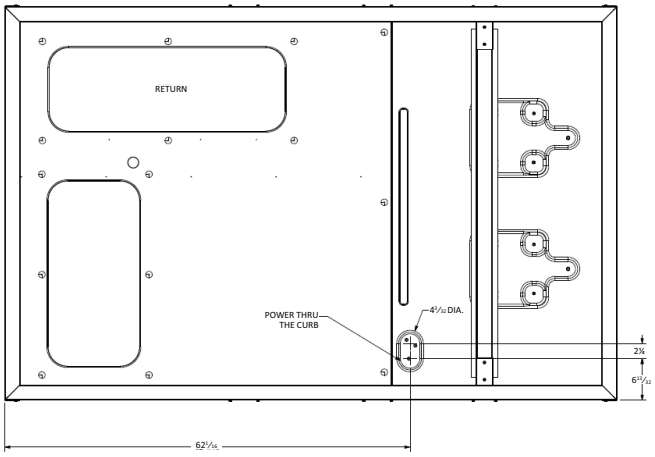

Unit Clearances

Service Clearance

Allow for recommended service clearances as shown in figure to the right. In situations that have multiple units, a 36" minimum clearance is required between the condenser coils. A clearance of 48" is recommended on all sides of the unit to allow service access and to insure proper ventilation and condenser airflow. The top of the unit should be unobstructed. Provide a roof walkway along the sides of the unit for service and access to controls and components. Contact your Daikin sales representative for service requirements less than those recommended.

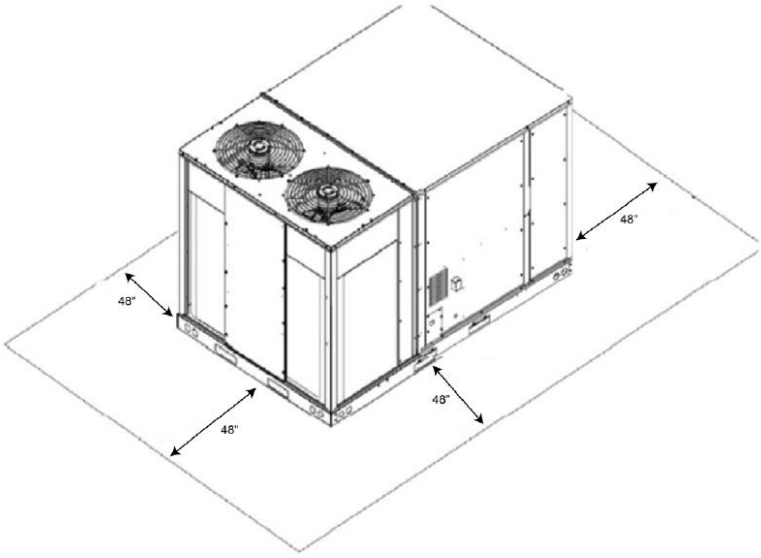

Unit Location

The structural engineer must verify that the roof has adequate support and ability to minimize deflection. Take extreme caution when using on a wooden roof structure. Unit condenser coils should be in a location that avoids any heated exhaust air.

Allow sufficient space around the unit for maintenance/service clearance. Consult your Daikin sales representative if available clearances do not meet minimum recommendations.

Where code considerations, such as the NEC, require extended clearances, these take precedence.

Provisions for forks have been included in the unit base frame. No other fork locations are approved.

» Unit must be lifted by the four lifting holes located at the base frame corners.

» Lifting cables should be attached to the unit with shackles.

» The distance between the crane hook and the top of the unit must not be less than 60".

» Two spreader bars must span over the unit to prevent damage to the cabinet by the lift cables. Spreader bars must be of sufficient length so that cables do not come in contact with the unit during transport. Remove wood struts mounted beneath unit base frame before setting unit on roof curb. These struts are intended to protect unit base frame from fork lift damage. To remove the struts, extract the sheet metal retainers and pull the struts through the base of the unit. Refer to rigging label on the unit.

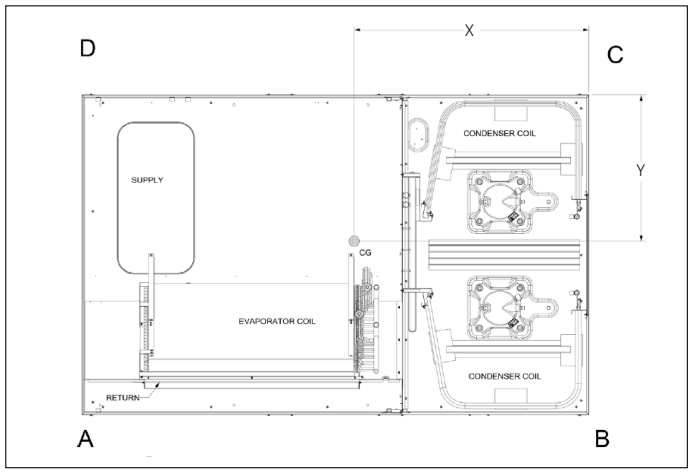

Corner & Center-of-Gravity Locations

Important: If using bottom discharge with roof curb, ductwork should be attached to the curb prior to installing the unit. Refer to the Roof Curb Installation Instructions for proper curb installation. Curbing must be installed in compliance with the National Roofing Contractors Association Manual. Lower unit carefully onto roof mounting curb. While rigging the unit, the center of gravity will cause the condenser end to be lower than the supply air end. Bring condenser end of unit into alignment with the curb. With condenser end of the unit resting on curb member and using curb as a fulcrum, lower opposite end of the unit until entire unit is seated on the curb. When a rectangular cantilever curb is used, take care to center the unit. Check for proper alignment and orientation of supply and return openings with duct.

Roof Curb Installation

The roof curb is field-assembled and must be installed level (within 1/16" per foot side to side). A sub-base must be constructed by the contractor in applications involving pitched roofs. Gaskets are furnished and must be installed between the unit and curb. For proper installation, follow NRCA guidelines. In applications requiring post and rail installation, an I-beam securely mounted on multiple posts should support the unit on each side. In addition, the insulation on the underside of the unit should be protected from the elements. Applications in geographic areas subjected to seismic or hurricane conditions must meet code requirements for fastening the unit to the curb and the curb to the building structure. For further and more detailed information please refer to our Daikin Light Commercial Packaged unit IOD.

Weights

Model	Shipping Weight (lbs)	Operating Weight (lbs)	Corner Weights (lbs)				Length	Width
			A	B	C	D	X (in)	Y (in)
DBG090	1175	1095	174	359	249	393	44	27
DBG102	1186	1106	225	335	294	333	49	28
DBG120	1230	1150	186	351	244	369	45	30
DBG150	1368	1288	231	401	309	347	41	28

Accessories

Field Accessory part number	Description	Fits Model Sizes	Field-Installed	Factory-Installed	Operating Weight (lbs)
	Stainless Steel Heat Exchangers (Gas Only)				
	210,000 BTU, 7 burners	7.5/8.5 ton		√	included in operating weight
	210,000 BTU, 7 burners	7.5-10 ton		√	included in operating weight
	210,000 BTU, 7 burners	12.5 ton		√	Included in operating weight
	210,000 BTU, 7 burners	12.5 ton		√	included in operating weight
	Duct Smoke Detectors				
	Smoke Detectors - Return	7.5-10 ton		√	
	Smoke Detectors - Return	12.5 ton		√	
	Smoke Detectors - Supply	7.5-12.5 ton		√	
	Smoke Detectors - Supply and Return	7.5-10 ton		√	
	Smoke Detectors - Supply and Return	12.5 ton		√	
	Non-Fused Disconnect Switch				
	60 Amp Disconnect	7.5-12.5 ton		√	
	100 Amp Disconnect	7.5-12.5 ton		√	
	150 Amp Disconnect	7.5-12.5 ton		√	
	250 Amp Disconnect	7.5-12.5 ton		√	
	Convenience Outlets				
	Convenience Outlets - Powered, 208/230 V	7.5-12.5 ton		√	47
	Convenience Outlets - Powered, 460 V	7.5-12.5 ton		√	47
	Convenience Outlets - Powered, 575 V	7.5-12.5 ton		√	47
	Convenience Outlets - Non-Powered	7.5-12.5 ton		√	2
	Hinged Access Panels				
	Hinged Access Panels	7.5-12.5 ton		√	
	Economizer				
0270L01760	Horizontal Economizer Ultra Low-Leak JADE® Enthalpy Sensor	7.5-12.5 ton	√		128
0270L01130	Horizontal Economizer Ultra Low-Leak *JADE* Dry-Bulb	7.5-12.5 ton	√		128
0270L01754	Downflow Economizer Standard Low-Leak *JADE* Enthalpy Sensor	7.5-12.5 ton	√	√	103
0270L01756	Downflow Economizer Ultra Low-Leak *JADE* Enthalpy Sensor	7.5-12.5 ton	√	√	103
0270L01123	Downflow Economizer Standard Low-Leak *JADE* Dry-Bulb	7.5-12.5 ton	√	√	103
0270L01125	Downflow Economizer Ultra Low-Leak *JADE* Dry-Bulb	7.5-12.5 ton	√	√	103
	Curbs and Restraint Clips				
0270L01153	Roof Curb 14" Tall, Knocked Down	7.5-12.5 ton	√		116
0270L01154	Roof Curb 24" Tall, Knocked Down	7.5-12.5 ton	√		174
0270L01262	Hold Down Bracket Kit	7.5-12.5 ton	√		8
0270L01251	Hold Down Bracket Kit for Daikin Roof curb	7.5-12.5 ton	√		8
0221L00017	14" Tall Seismic Curb	7.5-12.5 ton	√		120
0221L00018	14" Tall Wind-Rated/Hurricane Curb	7.5-12.5 ton	√		160
	Concentrics				
0221L00011	Concentric Diffuser 30 x 48 with 20" Dia. collars	7.5/8.5 ton	√		
0221L00012	Concentric Diffuser 36 x 48 with 18 x 28 duct size	10 ton	√		
0221L00013	Concentric Diffuser 42 x 48 with 18 x 32 duct size	12.5 ton	√		
0270L01336	Concentric adaptor for curb - 20" collar	7.5/8.5 ton	√		40
0270L01768	Concentric adaptor for curb - 18 x 28 duct size	10 ton	√		56
0270L01769	Concentric adaptor for curb - 18 x 32 duct size	12.5 ton	√		54

Accessories

Field Accessory part number	Description	Fits Model Sizes	Field-Installed	Factory-Installed	Operating Weight (lbs)
	Damper				
0270L01132	2 Position Motorized Damper	7.5-12.5 ton	√		57
0270L01133	Manual Outdoor Air Damper	7.5-12.5 ton	√		41
	Flue Extensions (Gas Only)				
HEFLUE090120	Flue Extension Kit	7.5-12.5 ton	√		
	Hail Guard Kits				
HAILGD090120HE	Condenser Coil Hail Guards	7.5-12.5 ton	√	√	
	Crankcase Heater Kits				
HECH90150230	Crankcase Heater Kit 230V	7.5-12.5 ton	√		2
HECH90150460	Crankcase Heater Kit 460V	7.5-12.5 ton	√		2
HECH90150575	Crankcase Heater Kit 575V	7.5-12.5 ton	√		2
	High-Efficiency Filters				
0160L00271	High-Efficiency MERV 8 Air Filter Kit - 20x25x2 (qty 4)	7.5/8.5/12.5 ton	√		4
0160L00270	High-Efficiency MERV 8 Air Filter Kit - 20x20x2 (qty 4)	10 ton	√		4
0160L00202	High-Efficiency MERV 13 Air Filter Kit - 20x25x2 (qty 4)	7.5/8.5/12.5 ton	√		4
0160L00201	High-Efficiency MERV 13 Air Filter Kit - 20x20x2 (qty 4)	10 ton	√		4
	Misc Accessories				
LPHE-090150	Propane Conversion Kit (Gas only)	7.5-12.5 ton	√		1
HAKT036150	High Altitude Kit (Gas only)	7.5-12.5 ton	√		1
TTBCKHE02	Through the Base Connections	7.5-12.5 ton	√	√	1
3PMKP2	Phase Monitor Kit	7.5-12.5 ton	√	√	2
0270L01233	Burglar bars Inserts	7.5-12.5 ton	√		28
	Power Exhaust				
0270L01134	Power Exhaust Prop Downflow Economizer 208/230 V	7.5-12.5 ton	√		94
0270L01137	Power Exhaust Prop Horizontal Economizer 208/230 V	7.5-12.5 ton	√		76
0270L01135	Power Exhaust Prop Downflow Economizer 460 V	7.5-12.5 ton	√		94
0270L01138	Power Exhaust Prop Horizontal Economizer 460 V	7.5-12.5 ton	√		76
	Controls, Thermostats and Sensors				
DT4272C	Comm Touch Digital Stat w/ Wi-Fi 4h/2c	7.5-12.5 ton	√		1
DT4273C	Comm Touch Digital Stat w/ Wi-Fi & Humidity Control 4h/2cc	7.5-12.5 ton	√		1
TSTATGAC-WS	Remote indoor sensor	7.5-12.5 ton	√		1
250803400	AppStat™ RTU 2H/2C Econ	7.5-12.5 ton	√		1
250803600	AppStat™ RTU 3H/2C Econ (HP only)	7.5-12.5 ton	√		1
D4271C	4h/2c Commercial 7day Programmable Wi-Fi Capable thermostat	7.5-12.5 ton	√		1
D4272C	4h/2c Commercial 7day Programmable Wi-Fi Capable Hum/dehum thermostat	7.5-12.5 ton	√		1
C7232B1022	CO_2 Sensor (Duct Mtd)	7.5-12.5 ton	√		1

Note: Where multiple variations are available, the heaviest combination is listed.

Factory Installed Options

» **Non-Powered Convenience Outlet:** A 120V, 15A, GFCI outlet can be installed in the unit making it easier for technicians to service other units once an electrician runs power to the outlet. Outlet shall be factory-installed and internally mounted with easily accessible 120-v female receptacle. Transformer not included for this option. Outlet shall include a field-installed "While-in-Use" cover.

» **High-Static Kit:** Allows for operation in higher static applications.

» **Powered Convenience Outlet:** A 120V, 15A, GFCI outlet can be powered with a step-transformer built into the unit. For use when the unit is not running. When a factory-installed powered convenience outlet is installed in the equipment, the unit MCA (Min. Circuit Ampacity) will increase by 7.5A for 208/230V units; increase by 3.75A for 460V units; and by 3A for 575V units. The MOP (Max. Overcurrent Protection) device must be sized accordingly. Outlet shall be powered from main line power to the rooftop unit. Outlet shall include a field-installed "While-in-Use" cover.

» **Stainless-Steel Heat Exchanger (Gas/Electric units only):** A tubular heat exchanger made of 409-type stainless steel can be installed in the unit.

» **Return Air and/or Supply Air Smoke Detectors:** Return air and/or supply air smoke detectors can be installed in the unit. To safely identify the presence of smoke inside the air conditioning system and shutdown the blower to prevent the smoke to disperse into different zones.

» **Disconnect Switch (non-fused):** A disconnect switch can be installed in the unit with factory wiring complete from the switch to the unit. Please note that for air conditioner and heat pump units, the appropriate electric heat kit must be ordered along with the disconnect switch (non-fused) to be factory-installed. For models with a powered convenience outlet option and a disconnect switch (non-fused) option, the power to the powered convenience outlet will be shut off when the disconnect switch (non-fused) is in the off position. National Electric Code (NEC) and UL approved non-fused switch shall provide unit power shutoff. The switch shall be accessible from outside of the unit and provide local shutdown and lockout capability.

» **Hinged Access Panels:** Allows access to unit's major components. Combined with latches for easy access to control box, compressor, filters and blower motor.

» **Through-the-base electrical connection:** Allows an easier and faster field installation through the unit basepan.

» **Through-the-base gas utility connection:** Allows an easier and faster field installation through the unit basepan.

» **Electromechanical Controls:** Basic controls that include terminal block for unit connectivity to T-Stat.

Field Installed Options

» **Manual Fresh Air Damper:** Manual damper package shall consist of damper, air inlet screen, and rain hood which can be preset to admit up to 25% outdoor air for year round ventilation.

» **Motorized Fresh Air Damper:** A two-position damper with rain hood and screen provides up to 50% outside air when the indoor fan starts and closes when the indoor fan shuts down. Consist of actuator, damper, air inlet screen, and rain hood. Damper shall close upon indoor (evaporator) fan shutoff and/or loss of power. The damper actuator shall plug into the rooftop unit's wiring harness plug. No hard wiring shall be required.

» **Power Exhaust:** Power exhaust shall be used in conjunction with an integrated economizer. This accessory exhausts return air and may be used in either downflow or horizontal (duct-mounted) applications. Horizontal power exhaust shall be mounted in return ductwork. Power exhaust shall be controlled by economizer controller operation. Exhaust fans shall be energized when dampers open past the 0-100% adjustable setpoint on the economizer control.

» **Horizontal Economizer:** Fully modulating between 0 and 100%, contain seals that meet ASHRAE 90.1 requirements. Includes motor and dampers, minimum position settings, preset linkage, wiring harness with plug, mixed air temperature sensor, and enthalpy control. An optional duct-mounted barometric relief damper is available. An optional return enthalpy sensor is available to provide comparative or differential enthalpy control. Damper blades shall be galvanized steel with composite gears. Plastic or composite blades on intake or return shall not be acceptable. Standard leak rate shall be equipped with dampers not to exceed 2% leakage at 1 in. wg pressure differential. Ultra Low Leak design meets California Title 24 section 140.4 and ASHRAE90.1 requirements for 4 cfm per sq.ft. on the outside air dampers and 10 cfm per sq. ft. on the return dampers. Shall be designed to close damper(s) during loss-of-power situations with spring return built into motor. Economizer controller shall accept a 2-10 Vdc $C0_2$ sensor input for IAQ/DCV control. In this mode, dampers shall modulate the outdoor air damper to provide ventilation based on the sensor input.

» Economizer controller shall be Honeywell® JADE® W7220 that provides:

- 2-line LCD interface screen for setup, configuration and troubleshooting.
- On-board Fault Detection and Diagnostics (FDD) that senses and alerts when the economizer is not operating properly, per California Title 24.
- Sensor failure loss of communication identification
- Automatic sensor detection
- Capabilities for use with multiple-speed indoor fan systems
- Utilize digital sensors: Dry bulb and Enthalpy
- Economizer controller shall provide indications when in free cooling mode, in the DCV mode, or the exhaust fan contact is closed.

- **High Altitude Kit (Gas/Electric units):** Can be used in gas/electric units operating at higher altitudes.
- **Barometric relief (only when economizer is installed):** Allows air pressure relief inside the building to maintain a constant interior pressure.
- **LP Conversion Kit (Gas/Electric units):** Allows gas/electric package units to use propane fuel.
- **Roof curbs:** Full perimeter roof curb with exhaust capability providing separate air streams for energy recovery from the exhaust air without supply air contamination. Two different heights 14" and 24", allows proper installation and structure stability. Formed galvanized steel with wood nailer strip and shall be capable of supporting entire unit weight.
- **Concentric duct kits:** Designed to provide a single point air distribution system with the added benefit of having directional air control.
- **Restraint mounting clips***:* Allows for installation reinforcement for Hurricane and/or seismic events.
- **$C0_2$ sensor:** Sensor designed to alarm the system when the $C0_2$ levels are outside safe parameters.
- **Flue extension (Gas/Electric units):** Allows the exhaust gas produced by the heat exchanger to be redirected.
- **Burglar Bar Sleeves**: Designed to prevent the access thru the return or supply ducting inside the unit.
- **Downflow square to round adapter 18":** Installed into a recessed portion of the roof curb, the concentric duct adaptor changes the orientation of the ductwork from square to round for applications utilizing that type of ducting system.
- **Side discharge concentric diffuser system:** The Concentric diffuser system is an all in one supply and return duct free arrangement for RTU systems. This system comes with two separate duct connections, one for a supply and another for a return.
- **Remote indoor sensor:** Remote sensor to monitor the temperature on zones away from the main thermostat.
- **Drain pan overflow switch:** Allows the controls to detect and send an alarm when there is an overflow on the drain pan.
- **Freeze stat:** Temperature sensing device that monitors the heat exchange to prevent the coil from freezing.

Factory and Field Installed Options

- **Downflow Economizer:** Fully modulating between 0 and 100%, contain seals that meet ASHRAE 90.1 requirements. Includes motor and dampers, minimum position settings, a preset linkage, a wiring harness with plug, a mixed air temperature sensor, enthalpy control, and a barometric relief damper. An optional return enthalpy sensor is available to provide comparative or differential enthalpy control. Damper blades shall be galvanized steel with composite gears. Plastic or composite blades on intake or return shall not be acceptable. Standard leak rate shall be equipped with dampers not to exceed 2% leakage at 1 in. wg pressure differential. Ultra Low Leak design meets California Title 24 section 140.4 and ASHRAE90.1 requirements for 4 cfm per sq.ft. on the outside air dampers and 10 cfm per sq. ft. on the return dampers. Shall be designed to close damper(s) during loss-of-power situations with spring return built into motor. Economizer controller shall accept a 2-10 Vdc $C0_2$ sensor input for IAQ/DCV control. In this mode, dampers shall modulate the outdoor air damper to provide ventilation based on the sensor input.Economizer controller shall be Honeywell® W7220 that provides:
- Economizer controller shall be *Honeywell* W7220 that provides:
  - 2-line LCD interface screen for setup, configuration and troubleshooting.
  - On-board Fault Detection and Diagnostics (FDD) that senses and alerts when the economizer is not operating properly, per California Title 24.
  - Sensor failure loss of communication identification
  - Automatic sensor detection
  - Capabilities for use with multiple-speed indoor fan systems
  - Utilize digital sensors: Dry bulb and Enthalpy
  - Economizer controller shall provide indications when in free cooling mode, in the DCV mode, or the exhaust fan contact is closed.
- **Low Ambient Control:** Allows cooling operation down to 0°F outdoor ambient temperature.
- **Phase Monitor:** Phase monitor (3-Phase only) shall provide protection for motors and compressors against problems caused by phase loss, phase reversal and phase unbalance. Phase monitor is equipped with an LED that provides an ON or FAULT indicator.
- **Condenser Hail Guards:** Louvered metal guards help protect the condenser coil from hail and debris; available as a field-installed options on 3 – 12½ ton units.

Our continuing commitment to quality products may mean a change in specifications without notice.
© 2020 ***DAIKIN MANUFACTURING COMPANY, L.P.*** • Houston, Texas • Printed in the USA.