DBG Commercial

Base Efficiency Gas/Electric Direct-Drive Packaged Rooftop Unit DBG Commercial 3-5 Nominal Tons

14 SEER/ 11.5 EER

*Complete warranty details available from your local distributor or manufacturer's representative or at www.daikincomfort.com or www.daikinac.com

Supersedes 11/21

Our Perfect Package:

Harnessing energy-efficient performance, proven technology, and enhanced comfort for life.

Since becoming the first company in Japan to manufacture packaged air conditioning systems, in 1951, Daikin has supported comfortable indoor living based on the strengths and technologies that have led to the growth of the company becoming one of the world's largest manufacturers of HVAC products, systems and refrigerants.

Today, as a comprehensive global manufacturer of HVAC products and systems, the Daikin brand is committed to being recognized as a truly global and excellent company capable of continually creating new value for its customers. The company plans to pursue sustainable growth and foster business operations that consistently harmonize with the goals of improving indoor comfort.

The group philosophy of the company includes:

- Creating new value continuously for customers
- Developing world leading energy-saving technology
- Being a flexible and dynamic organization
- Allowing employees to be the driving force for the success of the company
- Fostering an atmosphere of best practices, boldness, and innovation
- Thinking and acting globally

Contents

2	Introduction	2
4	Nomenclature	4
5	Features and Benefits	5
	Applications	8
	Serviceability	8
9	Product Specifications	9
	Coil Dimensions	12
	AHRI Ratings	12
	Sound Data	12
13	Expanding Cooling Data	13
24	Heating Data	24
25	Air Flow	25
32	Static Pressure	32
33	Electrical Data	33
34	Wiring Diagrams	34
36	Dimensional Data	36
37	Electrical Connections	37
	Unit Clearances	37
38	Installation	38
	Weights	38

Nomenclature

D	B	G	036	3	D	045	A	A	A	X	X	X	X	X	X	X	X	A	*
1	2	3	4,5,6	7	8	9,10,11	12	13	14	15	16	17	18	19	20	21	22	23	24

Brand
D Daikin

Configuration
B Base Efficiency

Application
C Cooling
G Gas Heat
H Heat Pump

Nominal Cooling Capacity
036 3 Tons
048 4 Tons
060 5 Tons

Voltage
1 208-230/1/60
3 208-230/3/60

Supply Fan/Drive Type/Motor
D Direct-Drive - Standard Static

Nominal Heating Capacity

Gas/Electric	A/C Factory-Installed Electric Heat	
045 45,000 BTU/h	XXX	No Heat
070 70,000 BTU/h	005	5kW
090 90,000 BTU/h	010	10 kW
115 115,000 BTU/h	015	15 kW
140 140,000 BTU/h	016	15 kW
	022	20 kW

See product specifications for heat size(s) available for each capacity.

Refrigeration Systems
A Single-stage cooling modes

Heat Exchanger
X No options
A Standard Aluminized Exchanger
S Stainless Steel Exchanger

Controls
A Electromechanical controls

Revision Levels
Major & Minor

X No Options

Power Exhaust
X No Options
B Single-point power connection for Power Exhaust

X No Options

Service Options
X No Option
A Powered convenience outlet
B Non-powered convenience outlet
C Hinge Panels
D Hinged Panels and Powered convenience outlet
E Hinged Panels and non-powered convenience outlet

Electrical
X No Options
A Non-Fused Disconnect
B Phase Monitor
C Thru-the-base connections
E Non-Fused Disconnect and Phase Monitor
F Non-Fused Disconnect and Thru-the-base connections
H Phase Monitor and Thru-the-base connections
L Non-Fused Disconnect, Thru-the-base connections and Phase Monitor

Economizer
X No Options
A Ultra Low-Leak Downflow Economizer w/ Enthalpy Sensor
B Low-Leak Downflow Economizer w/ Enthalpy Sensor
G Ultra Low-Leak Downflow Economizer w/ Dry Bulb Sensor
H Low-Leak Downflow Economizer w/ Dry Bulb Sensor

Hail guard
X No Options
C Hail Guard

Sensors
X No Options
A RA Smoke Detector
B SA Smoke Detector
C RA & SA Smoke Detector

G/E Stocking Models

New Daikin 3-5 Ton

Model Number	Code String
DBG0361DL00001S	DBG0361D045AAAXXXXXXXX
DBG0361DH00001S	DBG0361D090AAAXXXXXXXX
DBG0363DL00001S	DBG0363D045AAAXXXXXXXX
DBG0363DH00001S	DBG0363D090AAAXXXXXXXX
DBG0481DL00001S	DBG0481D090AAAXXXXXXXX
DBG0481DH00001S	DBG0481D115AAAXXXXXXXX
DBG0483DL00001S	DBG0483D090AAAXXXXXXXX
DBG0483DH00001S	DBG0483D115AAAXXXXXXXX
DBG0601DL00001S	DBG0601D090AAAXXXXXXXX
DBG0601DH00001S	DBG0601D140AAAXXXXXXXX
DBG0603DL00001S	DBG0603D090AAAXXXXXXXX
DBG0603DH00001S	DBG0603D140AAAXXXXXXXX

Daikin Packaged Rooftop Units (RTUs) are built to perform, with features and options that help provide low installation and operation costs, superior indoor air quality, efficient operation, and longevity.

Installation

Daikin Packaged units are designed with fast and easy installation in mind and are ideal for both new construction and retrofit projects. Our packaged rooftop units are built to be a direct replacement for most rooftop units on the field without the need of a curb adapter, to be able to replace the unit in a shorter time and at a lower cost (compared to the previous design).

Cabinet Construction

Daikin packaged rooftop units are made with high quality galvanized steel with a powder-paint finish to provide higher corrosion resistance.

- Easy accessibility using our tool-less filter access (available on small chassis).
- The interior surface in the indoor air section is fully insulated to prevent sweating and thermal losses, using our foil face fiberglass insulation which also omits exposed filter fibers into the airstream.
- 1" Raised flanged edges around the supply and return offer easy installation for the duct connections.

- The full perimeter base rail is built using heavy gauge galvanized steel for a stronger structural installation. The base rails are a minimum of 3 ½" tall and include holes to allow for overhead rigging and lifting with forklifts.
- Electrical lines and gas lines can be brought through the base of the unit or through the horizontal knockout for easy installation and accessibility on the field.

Compressor

High performance, low noise scroll compressors to match the required total load.

- Resiliently factory-mounted on rubber grommets for vibration isolation
- Refrigeration circuit includes both a low- and high-pressure transducer, high pressure safety switch and temperature sensors for the suction and discharge lines.
- Unit is factory charged with environmentally friendly R-410A refrigerant.
- Compressor location outside the condenser section to avoid air bypass.
- Internal overload protection included with compressor.

Supply Fan

The direct-drive with airfoil single width, single inlet (SWSI) Class II construction supply fan with aluminum fan +blades provides efficient and quiet operation at wide ranging static pressure and air flow requirements.

- Fan wheel is continuously welded to the hub plate and end rim for long lasting reliable operation.
- Direct-drive EEM motor removes the need for belts, sheaves, or bearings and its permanently lubricated motors provides low maintenance cost.
- Each fan assembly is dynamically trim balanced at the factory before shipment for quick start-up and efficient operation.
- Electromechanical integrated controls modulate the supply fan motor
- Motor with thermal overload and phase failure protection is provided for motor long lasting operation.

Coils

All units use large face area outdoor coils. These coils are constructed with seamless copper tubes, mechanically bonded into aluminum plate-type fins with full drawn collars to completely cover the tubes for high operating efficiencies.

The indoor coil section is installed in a draw through configuration to provide better dehumidification.

» Coils are factory pressure tested to ensure pressure and leak integrity.

» Copper tube / aluminum fin coils on condenser and evaporator

» 5mm Smart Coil Technology on all condenser coils for improved performance and reduced refrigerant load.

Controls and Wiring

Packaged rooftop units come equipped with a well-organized, large, easy to use, weatherproof internal control box with easy access, for a better user experience.

» Units are factory-wired with labeled color-coded wires and complete 24-volt Electromechanical controls package.

» Terminal blocks are provided as standard for easy installation and field power wiring.

Filtration

Unit provides a draw-through filter section as standard for better air quality and long lasting component maintenance.

» Filters installed on the units are standard off the shelf sizes for easy replacement.

» One size filter per unit for low maintenance cost and easy replacement.

» Easy and fast filter service access.

Heating Section

Wide range of natural gas selections effectively handle most comfort heating demand from morning warm-up control to full heat, all available with Daikin's Wrinkle Bend heat exchanger technology.

Gas Furnace

ETL certified heating modules provide a custom match to specific design requirement.

» Wrinkle Bend Technology available on all Daikin gas heat exchangers. The Wrinkle Bend Technology reduces the manufacturing stress that leads to defects and pinholes in the tubes at the same time as it increases the gas turbulence to amplify the heat transfer.

» All single phase 3-5 ton Gas units have 81% AFUE.

» All 3-Phase models have a minimum 81% T.E. (Thermal Efficiency)

» User has the flexibility to order heat exchanger tubes with 20 Gauge, G160, aluminized steel or stainless steel to meet your application needs.

» The furnace has a tubular design with in-shot gas burner manifold and is installed downstream of the supply fan.

» The module contains an induced draft fan that will maintain a negative pressure in the heat exchanger tubes for the removal of the flue gases to protect indoor air quality.

» Each burner module provides flame roll-out safety protection switches and a high temperature limit switch for reliable operation.

» Induced draft fan includes an airflow safety switch to prevent heating operation in the event of no airflow for occupant safety.

» All burner assemblies are factory tested and adjusted prior to shipment.

» Heating control is fully integrated into the unit's control system for quick start-up and reliable control.

» Optional field installed LP kits are available for staged heating modules as well as high altitude kits.

Electrical

Units are completely wired and tested at the factory to provide faster commissioning and start-up.

» Wiring complies with NEC requirements and all applicable UL standards.

» For ease of use, wiring and electrical components are number coded and labeled according to the electrical diagram.

» A 115 V GFI convenience outlet requiring independent power supply for the receptacle is optional.

» An optional unit powered 20 amp 115 V convenience outlet, complete with factory mounted transformer, disconnect switch, and primary and secondary overload protection, eliminates the need to pull a separate 115 V power source.

» Supply air fan, compressor, and condenser fan motor branch circuits have individual short circuit protection. Unit includes knockouts in the bottom of the main control panels for field wiring entrance.

» A single-point power connection with power block is standard and a terminal board is provided for connecting low voltage control wiring.

» For better serviceability an optional non-fused disconnect switch can be installed inside the control panel and operated by an externally mounted handle to disconnect the electrical power at the unit.

DAIKIN

Applications

Daikin Rooftop units are intended for comfort cooling applications in normal heating, ventilating, and air conditioning. Consult your local Daikin sales representative for applications involving operations at high ambient temperatures, high altitudes, non-cataloged voltages, or for job-specific unit selections that fall outside of the range of the catalog tables.

For proper operation, units should be rigged in accordance with instructions stated on the installation manual. Fire dampers, if required, must be installed in the ductwork according to local and/or state codes. No space is allowed for these dampers in the unit.

Follow factory check, test and start procedures explicitly to achieve satisfactory start-up and operation.

Most rooftop applications take advantage of the significant energy savings provided with economizer operation. When an economizer system is used, mechanical refrigeration is typically not required below an ambient temperature of 50°F.

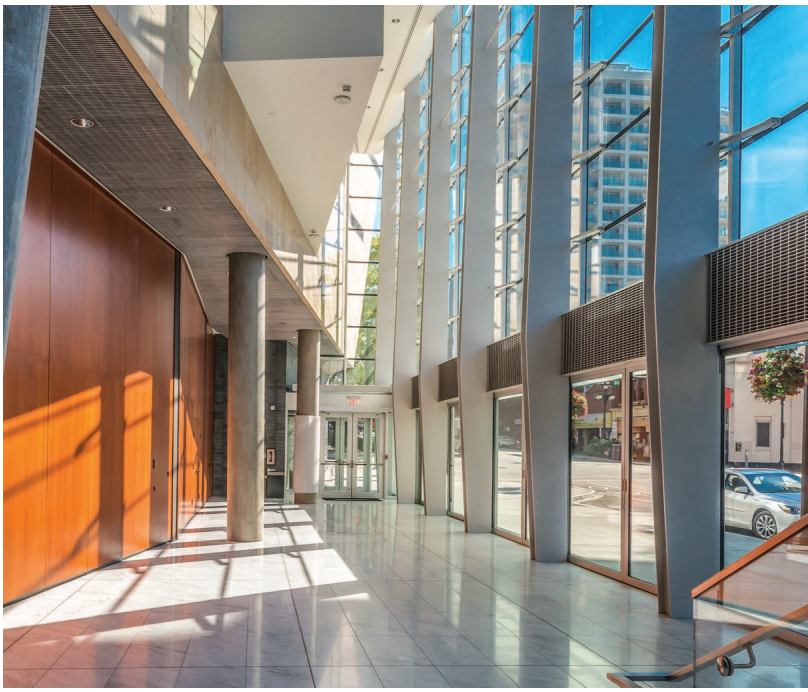

Serviceability

Daikin packaged rooftop units are built with serviceability in mind, designed to make future maintenance and service on the unit easy and accessible.

- Our packaged rooftop units offer a slide out blower to facilitate the access and removal of the fan.
- Filter panels on the small chassis line offer tool-less access for easy maintenance.
- Independent compressor outside of the air bypass to eliminate component blockage and provide easy access.
- Labeled field connections, color coded and continuously marked wire to identify point-to-point component connections.
- All 3 - 5 ton units are designed for convertible airflow orientation to serve downflow or horizontal applications. Every unit ships prepared to convert to horizontal orientation in the field if required.
- Condenser clean out from inside-out.
- Easy access to gas valves and control panel.

Model	DBG0361DL00001S	DBG0361DH00001S	DBG0363DL00001S	DBG0363DH00001S
COOLING CAPACITY				
Total, BTU/h	35,000	35,000	35,000	35,000
SEER / EER	14.0/11.5	14.0/11.5	14.0/11.5	14.0/11.5
AHRI Reference #	204601331	204601331	204601332	204601332
HEATING CAPACITY				
Heat Range	Low	High	Low	High
No. of Burners	2	5	2	5
High Stage Input / Output (KBTU/H)	45.0/36.4	90.0/72.9	45.0/36.4	90.0/72.9
Low Stage Input / Output (KBTU/H)	33.7/27.3	67.5/54.7	33.7/27.3	67.5/54.7
Thermal Efficiency (T.E.)	--	--	80	80
Annual Fuel Utilization Efficiency (AFUE)	81	81	--	--
High Stage Temperature Rise Range (°F)	15 - 45	45 - 75	15 - 45	45 - 75
Low Stage Temperature Rise Range (°F)	10 - 40	40 - 70	10 - 40	40 - 70
EVAPORATOR MOTOR COIL				
Motor Type	Direct-Drive	Direct-Drive	Direct-Drive	Direct-Drive
External Static Pressure (ESP)	Standard	Standard	Standard	Standard
Wheel Dia. X Width	12x11	12x11	12x11	12x11
Indoor Nominal CFM	1250	1250	1250	1250
RPM	1200	1200	1200	1200
Indoor Horsepower	0.75	0.75	0.75	0.75
Filter Size (in)	20 X 25 X 2 (2)	20 X 25 X 2 (2)	20 X 25 X 2 (2)	20 X 25 X 2 (2)
Drain Size (NPT)	3/4	3/4	3/4	3/4
R-410A Refrigerant Charge (oz.)	99	99	99	99
Evaporator Coil Face Area (ft^2)	6.4	6.4	6.4	6.4
Rows Deep/ Fins per Inch	4 / 16	4 / 16	4 / 16	4 / 16
CONDENSER FAN/COIL				
Quantity of Condenser Fan Motors	1	1	1	1
RPM (High/Low stage)	810	810	810	810
Outdoor Horsepower	0.17	0.17	0.17	0.17
Fan Diameter/ # Fan Blades	22 / 3	22 / 3	22 / 3	22 / 3
Face Area (ft^2)	12.5	12.5	12.5	12.5
Rows Deep / Fins per Inch	2 / 28	2 / 28	2 / 28	2 / 28
COMPRESSOR (ALL SINGLE-STAGE)				
Quantity / Type / Stages	1 / Scroll / 1	1 / Scroll / 1	1 / Scroll / 1	1 / Scroll / 1
Compressor RLA / LRA	16.7 / 79.0	16.7 / 79.0	10.4 / 73.0	10.4 / 73.0
ELECTRICAL DATA				
Voltage-Phase-Frequency	208/230-1-60	208/230-1-60	208/230-3-60	208/230-3-60
Indoor Blower FLA	5.7	5.7	5.7	5.7
Max External Static (In. W.C.)	0.8	0.8	0.8	0.8
Outdoor Fan FLA	0.95	0.95	0.95	0.95
Min. Circuit Ampacity[1]	27.5 / 27.5	27.5 / 27.5	19.7 / 19.7	19.7 / 19.7
Max. Overcurrent Protection (A)[2]	40 / 40	40 / 40	30 / 30	30 / 30
Power Supply Conduit Hole Dia. (in)	1.125	1.125	1.125	1.125
Low-Voltage Conduit Hole Dia. (in)	0.5	0.5	0.5	0.5
OPERATING WEIGHT (LBS.)				
Operating Weight (lbs)	557	573	557	573
SHIPPING WEIGHT (LBS.)				
Ship Weight (lbs)	605	615	605	615

[1] Wire size should be determined in accordance with National Electrical Codes. Extensive wire runs will require larger wire sizes.
[2] May use fuses or HACR-type circuit breakers of the same size as noted.
Note: Always check the S&R plate for electrical data on the unit being installed.

Model	DBG0481DL00001S	DBG0481DH00001S	DBG0483DL00001S	DBG0483DH00001S
COOLING CAPACITY				
Total, BTU/h	46,500	46,500	46,500	46,500
SEER / EER	14.0/11.5	14.0/11.5	14.0/11.5	14.0/11.5
AHRI Reference #	204110386	204601333	204601334	204601334
HEATING CAPACITY				
Heat Range	Low	High	Low	High
No. of Burners	4	5	4	5
High Stage Input / Output (KBTU/H)	90.0/72.9	115.0/93.2	90.0/72.9	115.0/93.2
Low Stage Input / Output (KBTU/H)	67.5/54.7	86.3/69.9	67.5/54.7	86.3/69.9
Thermal Efficiency (T.E.)	--	--	80	80
Annual Fuel Utilization Efficiency (AFUE)	81	81	--	--
High Stage Temperature Rise Range (°F)	30 - 60	45 - 75	30 - 60	45 - 75
Low Stage Temperature Rise Range (°F)	25 - 55	40 - 70	25 - 55	40 - 70
EVAPORATOR MOTOR COIL				
Motor Type	Direct-Drive	Direct-Drive	Direct-Drive	Direct-Drive
External Static Pressure (ESP)	Standard	Standard	Standard	Standard
Wheel Dia. X Width	12 x 11	12 x 11	12 x 11	12 x 11
Indoor Nominal CFM	1590	1590	1590	1590
RPM	1200	1200	1200	1200
Indoor Horsepower	1.0	1.0	1.0	1.0
Filter Size (in)	20 X 25 X 2 (2)	20 X 25 X 2 (2)	20 X 25 X 2 (2)	20 X 25 X 2 (2)
Drain Size (NPT)	3/4	3/4	3/4	3/4
R-410A Refrigerant Charge (oz.)	108	108	108	108
Evaporator Coil Face Area (ft^2)	6.4	6.4	6.4	6.4
Rows Deep/ Fins per Inch	4 / 16	4 / 16	4 / 16	4 / 16
CONDENSER FAN/COIL				
Quantity of Condenser Fan Motors	1	1	1	1
RPM (High/Low stage)	1075	1075	1075	1075
Outdoor Horsepower	0.25	0.25	0.25	0.25
Fan Diameter/ # Fan Blades	22 / 4	22 / 4	22 / 4	22 / 4
Face Area (ft^2)	13.3	13.3	13.3	13.3
Rows Deep / Fins per Inch	2 / 28	2 / 28	2 / 28	2 / 28
COMPRESSOR (ALL SINGLE-STAGE)				
Quantity / Type / Stages	1 / Scroll / 1	1 / Scroll / 1	1 / Scroll / 1	1 / Scroll / 1
Compressor RLA / LRA	19.9 / 109.0	19.9 / 109.0	13.1 / 83.1	13.1 / 83.1
ELECTRICAL DATA				
Voltage-Phase-Frequency	208/230-1-60	208/230-1-60	208/230-3-60	208/230-3-60
Indoor Blower FLA	6.9	6.9	6.9	6.9
Max External Static (In. W.C.)	0.8	0.8	0.8	0.8
Outdoor Fan FLA	1.4	1.4	1.4	1.4
Min. Circuit Ampacity[1]	33.1 / 33.1	33.1 / 33.1	24.7 / 24.7	24.7 / 24.7
Max. Overcurrent Protection (A)[2]	50 / 50	50 / 50	35 /35	35 /35
Power Supply Conduit Hole Dia. (in)	1.125	1.125	1.125	1.125
Low-Voltage Conduit Hole Dia. (in)	0.5	0.5	0.5	0.5
OPERATING WEIGHT (LBS.)				
Operating Weight (lbs)	601	609	601	609
SHIPPING WEIGHT (LBS.)				
Ship Weight (lbs)	645	654	645	654

[1] Wire size should be determined in accordance with National Electrical Codes. Extensive wire runs will require larger wire sizes.
[2] May use fuses or HACR-type circuit breakers of the same size as noted.
Note: Always check the S&R plate for electrical data on the unit being installed.

Model	DBG0601DL00001S	DBG0601DH00001S	DBG0603DL00001S	DBG0603DH00001S
COOLING CAPACITY				
Total, BTU/h	57,000	57,000	57,000	57,000
SEER / EER	14.0/11.5	14.0/11.5	14.0/11.5	14.0/11.5
AHRI Reference #	204601335	204601335	204601336	204601336
HEATING CAPACITY				
Heat Range	Low	High	Low	High
No. of Burners	4	6	4	6
High Stage Input / Output (KBTU/H)	90.0/72.9	140.0/113.4	90.0/72.9	140.0/113.4
Low Stage Input / Output (KBTU/H)	67.5/54.7	105.0/85.1	67.5/54.7	105.0/85.1
Thermal Efficiency (T.E.)	--	--	80	80
Annual Fuel Utilization Efficiency (AFUE)	81	81	--	--
High Stage Temperature Rise Range (°F)	20 - 50	45 - 75	20 - 50	45 - 75
Low Stage Temperature Rise Range (°F)	15 - 45	40 - 70	15 - 45	40 - 70
EVAPORATOR MOTOR COIL				
Motor Type	Direct-Drive	Direct-Drive	Direct-Drive	Direct-Drive
External Static Pressure (ESP)	Standard	Standard	Standard	Standard
Wheel Dia. X Width	12 x 11	12 x 11	12 x 11	12 x 11
Indoor Nominal CFM	1660	1660	1660	1660
RPM	1200	1200	1200	1200
Indoor Horsepower	1.0	1.0	1.0	1.0
Filter Size (in)	20 X 25 X 2 (2)	20 X 25 X 2 (2)	20 X 25 X 2 (2)	20 X 25 X 2 (2)
Drain Size (NPT)	3/4	3/4	3/4	3/4
R-410A Refrigerant Charge (oz.)	111	111	111	111
Evaporator Coil Face Area (ft^2)	6.4	6.4	6.4	6.4
Rows Deep/ Fins per Inch	4 / 16	4 / 16	4 / 16	4 / 16
CONDENSER FAN/COIL				
Quantity of Condenser Fan Motors	1	1	1	1
RPM (High/Low stage)	1110	1110	1110	1110
Outdoor Horsepower	0.33	0.33	0.33	0.33
Fan Diameter/ # Fan Blades	22 / 3	22 / 3	22 / 3	22 / 3
Face Area (ft^2)	17.1	17.1	17.1	17.1
Rows Deep / Fins per Inch	2 / 28	2 / 28	2 / 28	2 / 28
COMPRESSOR (ALL SINGLE-STAGE)				
Quantity / Type / Stages	1 / Scroll / 1	1 / Scroll / 1	1 / Scroll / 1	1 / Scroll / 1
Compressor RLA / LRA	25.0 / 134.0	25.0 / 134.0	15.9 / 110.0	15.9 / 110.0
ELECTRICAL DATA				
Voltage-Phase-Frequency	208/230-1-60	208/230-1-60	208/230-3-60	208/230-3-60
Indoor Blower FLA	6.9	6.9	6.9	6.9
Max External Static (In. W.C.)	0.8	0.8	0.8	0.8
Outdoor Fan FLA	2.0	2.0	2.0	2.0
Min. Circuit Ampacity[1]	40.2 / 40.2	40.2 / 40.2	28.8 / 28.8	28.8 / 28.8
Max. Overcurrent Protection (A)[2]	60 / 60	60 / 60	40 / 40	40 / 40
Power Supply Conduit Hole Dia. (in)	1.125	1.125	1.125	1.125
Low-Voltage Conduit Hole Dia. (in)	0.5	0.5	0.5	0.5
OPERATING WEIGHT (LBS.)				
Operating Weight (lbs)	605	620	605	620
SHIPPING WEIGHT (LBS.)				
Ship Weight (lbs)	648	660	648	660

[1] Wire size should be determined in accordance with National Electrical Codes. Extensive wire runs will require larger wire sizes.
[2] May use fuses or HACR-type circuit breakers of the same size as noted.
Note: Always check the S&R plate for electrical data on the unit being installed.

Coil Dimensions

Model	Tons	Fin height in.	Fin length in.
DBG	3	24.25	38.07
	4	24.25	38.07
	5	24.25	38.07

AHRI Ratings

MODEL	CAPACITY	EER	SEER
DBG0361D	35,000	11.5	14
DBG0481D	46,500	11.5	14
DBG0601D	57,000	11.5	14
DBG0363D	35,000	11.5	14
DBG0483D	46,500	11.5	14
DBG0603D	57,000	11.5	14

Sound Data

Model	Outdoor sound (dB) at 60 Hz								
	A-Weighted	63	125	250	500	1000	2000	4000	8000
036	75	78.5	85.4	74.4	71.8	69.1	65.8	60.9	59.2
048	73	82.5	78.1	71.6	69.5	68.0	66.1	59.5	58.6
060	76	84.4	80.5	76.2	72.9	70.9	67.4	63.8	63.1

Notes:

[1] Outdoor sound data is measured in accordance with AHRI standard 270.

[2] Measurements are expressed in terms of sound power. Do not compare these values to sound pressure values because sound pressure depends on specific environment factors which normally do not match individual applications. Sound power values are independent of the environment and therefore more accurate.

[3] A-weighted sound ratings filter out high and very low frequencies, to better approximate the response of "average" human ear. A-weighted measurements for Daikin units are taken in accordance with AHRI standard 270.

			Outdoor Ambient Temperature																							
			65				75				85				95				105				115			
			Entering Indoor Wet Bulb Temperature																							
IDB	Airflow	ID WB	59	63	67	71	59	63	67	71	59	63	67	71	59	63	67	71	59	63	67	71	59	63	67	71
70	900	Capacity	35,125	35,628	36,692	–	34,806	35,309	36,373	–	33,876	34,379	35,443	–	32,277	32,780	33,843	–	30,322	30,825	31,888	–	28,537	29,040	30,103	–
		S/T	0.49	0.41	0.27	–	0.49	0.42	0.28	–	0.52	0.44	0.30	–	1.00	0.46	0.32	–	1.00	0.48	0.35	–	1.00	0.53	0.40	–
		Evap dT	22.74	20.81	17.21	–	22.69	20.76	17.16	–	22.96	21.03	17.43	–	22.67	20.74	17.14	–	22.41	20.48	16.88	–	23.62	21.69	18.09	–
		Pr Suc	124	125	129	–	131	133	136	–	138	140	143	–	144	145	149	–	149	151	154	–	156	158	161	–
		Pr Dis	254	255	257	–	295	296	297	–	337	338	340	–	383	384	386	–	432	433	435	–	485	486	488	–
		TotalPower	2,092	2,089	2,085	–	2,369	2,367	2,362	–	2,678	2,676	2,671	–	3,013	3,010	3,006	–	3,386	3,384	3,380	–	3,825	3,823	3,818	–
	1250	Capacity	36,076	36,579	37,643	–	35,758	36,260	37,324	–	34,828	35,331	36,394	–	33,228	33,731	34,795	–	31,273	31,776	32,839	–	29,488	29,991	31,055	–
		S/T	0.67	0.59	0.45	–	0.67	0.60	0.46	–	0.70	0.62	0.49	–	1.00	0.64	0.51	–	1.00	0.66	0.53	–	1.00	0.71	0.58	–
		Evap dT	19.69	17.76	14.16	–	19.64	17.71	14.11	–	19.91	17.98	14.38	–	19.62	17.69	14.09	–	19.36	17.43	13.83	–	20.57	18.64	15.04	–
		Pr Suc	128	129	133	–	136	137	140	–	142	144	147	–	148	149	153	–	153	155	158	–	160	162	165	–
		Pr Dis	259	260	262	–	300	301	303	–	342	343	345	–	388	389	391	–	437	438	440	–	490	491	493	–
		TotalPower	2,129	2,127	2,122	–	2,406	2,404	2,399	–	2,716	2,713	2,709	–	3,050	3,048	3,043	–	3,424	3,422	3,417	–	3,863	3,861	3,856	–
	1350	Capacity	36,424	36,927	37,990	–	36,105	36,608	37,672	–	35,175	35,678	36,742	–	33,575	34,078	35,142	–	31,620	32,123	33,187	–	29,835	30,338	31,402	–
		S/T	0.69	0.61	0.48	–	0.70	0.62	0.49	–	1.00	0.65	0.51	–	1.00	0.67	0.53	–	1.00	0.69	0.55	–	1.00	0.74	0.60	–
		Evap dT	19.05	17.12	13.52	–	19.00	17.07	13.47	–	19.27	17.34	13.74	–	18.98	17.05	13.45	–	18.72	16.79	13.19	–	19.93	18.00	14.40	–
		Pr Suc	129	131	134	–	137	138	142	–	144	145	148	–	149	151	154	–	155	156	160	–	162	163	167	–
		Pr Dis	261	262	263	–	301	302	304	–	344	345	347	–	389	390	392	–	439	440	442	–	491	492	494	–
		TotalPower	2,137	2,135	2,130	–	2,414	2,412	2,407	–	2,724	2,721	2,717	–	3,058	3,056	3,051	–	3,432	3,430	3,425	–	3,871	3,869	3,864	–
75	900	Capacity	35,146	35,649	36,712	38,337	34,827	35,330	36,394	38,019	33,897	34,400	35,464	37,089	32,297	32,800	33,864	35,489	30,342	30,845	31,909	33,534	28,557	29,060	30,124	31,749
		S/T	0.61	0.54	0.40	0.26	0.62	0.54	0.41	0.27	1.00	0.57	0.43	0.29	1.00	0.59	0.45	0.31	1.00	0.61	0.48	0.33	1.00	1.00	0.53	0.38
		Evap dT	26.99	25.06	21.45	17.72	26.93	25.00	21.40	17.67	27.20	25.27	21.67	17.94	26.91	24.98	21.38	17.65	26.65	24.73	21.12	17.39	27.86	25.93	22.33	18.60
		Pr Suc	124	125	129	134	132	133	136	142	138	140	143	148	144	145	149	154	149	151	154	160	156	158	161	167
		Pr Dis	254	255	257	262	295	296	298	302	337	338	340	345	383	384	386	390	432	433	435	440	485	486	488	492
		TotalPower	2,090	2,088	2,083	2,104	2,367	2,365	2,360	2,381	2,676	2,674	2,669	2,690	3,011	3,009	3,004	3,025	3,385	3,382	3,378	3,399	3,823	3,821	3,816	3,838
	1250	Capacity	36,097	36,600	37,664	39,289	35,778	36,281	37,345	38,970	34,848	35,351	36,415	38,040	33,249	**33,752**	34,815	36,440	31,294	31,796	32,860	34,485	29,509	30,012	31,075	32,700
		S/T	0.80	0.72	0.58	0.44	1.00	0.73	0.59	0.45	1.00	0.75	0.62	0.47	1.00	**0.77**	0.63	0.49	1.00	1.00	0.66	0.51	1.00	1.00	0.71	0.57
		Evap dT	23.93	22.01	18.40	14.67	23.88	21.95	18.35	14.62	24.15	22.22	18.62	14.89	23.86	**21.93**	18.33	14.60	23.60	21.67	18.07	14.34	24.81	22.88	19.28	15.55
		Pr Suc	128	129	133	138	136	137	140	146	142	144	147	152	148	**150**	153	158	154	155	158	164	161	162	165	171
		Pr Dis	259	261	262	267	300	301	303	307	342	344	345	350	388	**389**	391	396	438	439	441	445	490	491	493	498
		TotalPower	2,128	2,125	2,121	2,142	2,405	2,402	2,398	2,419	2,714	2,712	2,707	2,728	3,048	**3,046**	3,042	3,063	3,422	3,420	3,415	3,437	3,861	3,859	3,854	3,875
	1350	Capacity	36,444	36,947	38,011	39,636	36,126	36,629	37,692	39,317	35,196	35,699	36,763	38,387	33,596	34,099	35,163	36,788	31,641	32,144	33,208	34,833	29,856	30,359	31,423	33,048
		S/T	0.82	0.74	0.61	0.47	1.00	0.75	0.61	0.47	1.00	0.78	0.64	0.50	1.00	0.79	0.66	0.52	1.00	1.00	0.68	0.54	1.00	1.00	0.73	0.59
		Evap dT	23.29	21.36	17.76	14.03	23.24	21.31	17.71	13.98	23.51	21.58	17.98	14.25	23.22	21.29	17.69	13.96	22.96	21.03	17.43	13.70	24.17	22.24	18.64	14.91
		Pr Suc	129	131	134	139	137	138	142	147	144	145	148	154	149	151	154	159	155	156	160	165	162	163	167	172
		Pr Dis	261	262	264	268	301	302	304	309	344	345	347	351	390	391	393	397	439	440	442	446	492	493	495	499
		TotalPower	2,135	2,133	2,129	2,150	2,412	2,410	2,406	2,427	2,722	2,720	2,715	2,736	3,056	3,054	3,049	3,071	3,430	3,428	3,423	3,445	3,869	3,867	3,862	3,883

IDB: Entering Indoor Dry Bulb Temperature

Shaded area reflects ACCA (TVA) conditions

kW = Total system power

High and low pressures are measured at the liquid and suction access fittings.

Amps: Unit amps (comp.+ evaporator + condenser fan motors)

Design Subcooling, 16 - 19 °F @ the liquid access fitting connection ARI 95 test conditions. Design Superheat 8 - 12°F @ the compressor suction access fitting connection.

			Outdoor Ambient Temperature																							
			65				75				85				95				105				115			
			Entering Indoor Wet Bulb Temperature																							
IDB	Airflow	ID WB	59	63	67	71	59	63	67	71	59	63	67	71	59	63	67	71	59	63	67	71	59	63	67	71
80	900	Capacity	35,330	35,833	36,897	38,522	35,012	35,514	36,578	38,203	34,082	34,585	35,648	37,273	32,482	32,985	34,049	35,673	30,527	31,030	32,093	33,718	28,742	29,245	30,309	31,933
		S/T	1.00	0.66	0.53	0.39	1.00	0.67	0.53	0.39	1.00	0.70	0.56	0.42	1.00	1.00	0.58	0.44	1.00	1.00	0.60	0.46	1.00	1.00	0.65	0.51
		Evap dT	31.26	29.33	25.72	21.99	31.20	29.27	25.67	21.94	31.47	29.54	25.94	22.21	31.18	29.25	25.65	21.92	30.92	29.00	25.39	21.66	32.13	30.20	26.60	22.87
		Pr Suc	124	126	129	135	132	134	137	142	139	140	144	149	144	146	149	155	150	152	155	160	157	159	162	167
		Pr Dis	255	256	258	262	295	296	298	303	338	339	341	345	383	385	386	391	433	434	436	440	485	487	488	493
		TotalPower	2,091	2,089	2,084	2,106	2,368	2,366	2,361	2,383	2,678	2,675	2,671	2,692	3,012	3,010	3,005	3,026	3,386	3,384	3,379	3,400	3,825	3,823	3,818	3,839
	1250	Capacity	36,281	36,784	37,848	39,473	35,963	36,466	37,529	39,154	35,033	35,536	36,600	38,224	33,433	33,936	**35,000**	36,625	31,478	31,981	33,045	34,670	29,693	30,196	31,260	32,885
		S/T	1.00	0.85	0.71	0.57	1.00	0.85	0.72	0.57	1.00	0.88	0.74	0.60	1.00	1.00	**0.76**	0.62	1.00	1.00	0.78	0.64	1.00	1.00	0.83	0.69
		Evap dT	28.20	26.28	22.67	18.94	28.15	26.22	22.62	18.89	28.42	26.49	22.89	19.16	28.13	26.20	**22.60**	18.87	27.87	25.95	22.34	18.61	29.08	27.15	23.55	19.82
		Pr Suc	128	130	133	139	136	138	141	146	143	144	148	153	149	150	**153**	159	154	156	159	164	161	163	166	171
		Pr Dis	260	261	263	267	300	302	303	308	343	344	346	350	389	390	**392**	396	438	439	441	445	491	492	494	498
		TotalPower	2,129	2,127	2,122	2,143	2,406	2,404	2,399	2,420	2,715	2,713	2,708	2,730	3,050	3,048	**3,043**	3,064	3,424	3,422	3,417	3,438	3,862	3,860	3,856	3,877
	1350	Capacity	36,629	37,132	38,196	39,820	36,310	36,813	37,877	39,502	35,380	35,883	36,947	38,572	33,781	34,284	35,347	36,972	31,825	32,328	33,392	35,017	30,041	30,544	31,607	33,232
		S/T	1.00	0.87	0.73	0.59	1.00	0.88	0.74	0.60	1.00	1.00	0.77	0.62	1.00	1.00	0.78	0.64	1.00	1.00	0.81	0.66	1.00	1.00	1.00	0.72
		Evap dT	27.56	25.63	22.03	18.30	27.51	25.58	21.98	18.25	27.78	25.85	22.25	18.52	27.49	25.56	21.96	18.23	27.23	25.30	21.70	17.97	28.44	26.51	22.91	19.18
		Pr Suc	130	131	135	140	137	139	142	148	144	146	149	154	150	151	155	160	155	157	160	165	162	164	167	172
		Pr Dis	261	262	264	269	302	303	305	309	344	345	347	352	390	391	393	397	439	441	442	447	492	493	495	499
		TotalPower	2,137	2,135	2,130	2,151	2,414	2,412	2,407	2,428	2,723	2,721	2,716	2,737	3,058	3,056	3,051	3,072	3,432	3,430	3,425	3,446	3,870	3,868	3,863	3,885
85	900	Capacity	35,930	36,433	37,497	39,122	35,611	36,114	37,178	38,803	34,682	35,185	36,248	37,873	33,082	33,585	34,649	36,273	31,127	31,630	32,693	34,318	29,342	29,845	30,909	32,533
		S/T	1.00	0.77	0.63	0.49	1.00	1.00	0.64	0.49	1.00	1.00	0.66	0.52	1.00	1.00	0.68	0.54	1.00	1.00	0.70	0.56	1.00	1.00	1.00	0.61
		Evap dT	35.04	33.11	29.51	25.78	34.99	33.06	29.46	25.73	35.26	33.33	29.73	26.00	34.97	33.04	29.44	25.71	34.71	32.78	29.18	25.45	35.92	33.99	30.39	26.66
		Pr Suc	126	128	131	136	134	136	139	144	141	142	145	151	146	148	151	156	152	153	157	162	159	160	164	169
		Pr Dis	256	257	259	263	296	298	299	304	339	340	342	346	385	386	388	392	434	435	437	441	487	488	490	494
		TotalPower	2,097	2,094	2,090	2,111	2,374	2,371	2,367	2,388	2,683	2,681	2,676	2,697	3,018	3,015	3,011	3,032	3,391	3,389	3,385	3,406	3,830	3,828	3,823	3,844
	1250	Capacity	36,881	37,384	38,448	40,073	36,563	37,066	38,129	39,754	35,633	36,136	37,200	38,824	34,033	34,536	35,600	37,225	32,078	32,581	33,645	35,270	30,293	30,796	31,860	33,485
		S/T	1.00	0.95	0.81	0.67	1.00	1.00	0.82	0.67	1.00	1.00	0.84	0.70	1.00	1.00	0.86	0.72	1.00	1.00	1.00	0.74	1.000	1.000	1.000	0.792
		Evap dT	31.99	30.06	26.46	22.73	31.94	30.01	26.41	22.68	32.21	30.28	26.68	22.95	31.92	29.99	26.39	22.66	31.66	29.73	26.13	22.40	32.87	30.94	27.34	23.61
		Pr Suc	130	132	135	140	138	140	143	148	145	146	149	155	150	152	155	161	156	158	161	166	163	165	168	173
		Pr Dis	261	262	264	269	302	303	305	309	344	345	347	352	390	391	393	397	439	440	442	447	492	493	495	499
		TotalPower	2,134	2,132	2,127	2,149	2,411	2,409	2,404	2,426	2,721	2,718	2,714	2,735	3,055	3,053	3,048	3,069	3,429	3,427	3,422	3,443	3,868	3,866	3,861	3,882
	1350	Capacity	37,229	37,732	38,796	40,420	36,910	37,413	38,477	40,102	35,980	36,483	37,547	39,172	34,381	34,884	35,947	37,572	32,425	32,928	33,992	35,617	30,641	31,144	32,207	33,832
		S/T	1.00	0.97	0.84	0.69	1.00	1.00	0.84	0.70	1.00	1.00	0.87	0.72	1.00	1.00	0.89	0.74	1.00	1.00	1.00	0.77	1.00	1.00	1.00	0.82
		Evap dT	31.35	29.42	25.82	22.09	31.29	29.37	25.76	22.03	31.57	29.64	26.04	22.30	31.28	29.35	25.74	22.01	31.02	29.09	25.49	21.76	32.23	30.30	26.69	22.96
		Pr Suc	132	133	136	142	139	141	144	149	146	148	151	156	152	153	156	162	157	159	162	167	164	166	169	174
		Pr Dis	262	264	265	270	303	304	306	310	346	347	348	353	391	392	394	399	441	442	444	448	493	494	496	501
		TotalPower	2,142	2,140	2,135	2,156	2,419	2,417	2,412	2,434	2,728	2,726	2,722	2,743	3,063	3,061	3,056	3,077	3,437	3,435	3,430	3,451	3,876	3,874	3,869	3,890

IDB: Entering Indoor Dry Bulb Temperature Shaded area reflects AHRI (TVA) conditions **kW = Total system power**

High and low pressures are measured at the liquid and suction access fittings. **Amps: Unit amps (comp.+ evaporator + condenser fan motors)**

Design Subcooling, 16 - 19 °F @ the liquid access fitting connection ARI 95 test conditions. Design Superheat 8 - 12°F @ the compressor suction access fitting connection.

			Outdoor Ambient Temperature																							
			65				75				85				95				105				115			
			Entering Indoor Wet Bulb Temperature																							
IDB	Airflow	ID WB	59	63	67	71	59	63	67	71	59	63	67	71	59	63	67	71	59	63	67	71	59	63	67	71
70	900	Capacity	35,125	35,628	36,692	–	34,806	35,309	36,373	–	33,876	34,379	35,443	–	32,277	32,780	33,843	–	30,322	30,825	31,888	–	28,537	29,040	30,103	–
		S/T	0.49	0.41	0.27	–	0.49	0.42	0.28	–	0.52	0.44	0.30	–	1.00	0.46	0.32	–	1.00	0.48	0.35	–	1.00	0.53	0.40	–
		Evap dT	22.74	20.81	17.21	–	22.69	20.76	17.16	–	22.96	21.03	17.43	–	22.67	20.74	17.14	–	22.41	20.48	16.88	–	23.62	21.69	18.09	–
		Pr Suc	124	125	129	–	131	133	136	–	138	140	143	–	144	145	149	–	149	151	154	–	156	158	161	–
		Pr Dis	254	255	257	–	295	296	297	–	337	338	340	–	383	384	386	–	432	433	435	–	485	486	488	–
		TotalPower	2,092	2,089	2,085	–	2,369	2,367	2,362	–	2,678	2,676	2,671	–	3,013	3,010	3,006	–	3,386	3,384	3,380	–	3,825	3,823	3,818	–
	1250	Capacity	36,076	36,579	37,643	–	35,758	36,260	37,324	–	34,828	35,331	36,394	–	33,228	33,731	34,795	–	31,273	31,776	32,839	–	29,488	29,991	31,055	–
		S/T	0.67	0.59	0.45	–	0.67	0.60	0.46	–	0.70	0.62	0.49	–	1.00	0.64	0.51	–	1.00	0.66	0.53	–	1.00	0.71	0.58	–
		Evap dT	19.69	17.76	14.16	–	19.64	17.71	14.11	–	19.91	17.98	14.38	–	19.62	17.69	14.09	–	19.36	17.43	13.83	–	20.57	18.64	15.04	–
		Pr Suc	128	129	133	–	136	137	140	–	142	144	147	–	148	149	153	–	153	155	158	–	160	162	165	–
		Pr Dis	259	260	262	–	300	301	303	–	342	343	345	–	388	389	391	–	437	438	440	–	490	491	493	–
		TotalPower	2,129	2,127	2,122	–	2,406	2,404	2,399	–	2,716	2,713	2,709	–	3,050	3,048	3,043	–	3,424	3,422	3,417	–	3,863	3,861	3,856	–
	1350	Capacity	36,424	36,927	37,990	–	36,105	36,608	37,672	–	35,175	35,678	36,742	–	33,575	34,078	35,142	–	31,620	32,123	33,187	–	29,835	30,338	31,402	–
		S/T	0.69	0.61	0.48	–	0.70	0.62	0.49	–	1.00	0.65	0.51	–	1.00	0.67	0.53	–	1.00	0.69	0.55	–	1.00	0.74	0.60	–
		Evap dT	19.05	17.12	13.52	–	19.00	17.07	13.47	–	19.27	17.34	13.74	–	18.98	17.05	13.45	–	18.72	16.79	13.19	–	19.93	18.00	14.40	–
		Pr Suc	129	131	134	–	137	138	142	–	144	145	148	–	149	151	154	–	155	156	160	–	162	163	167	–
		Pr Dis	261	262	263	–	301	302	304	–	344	345	347	–	389	390	392	–	439	440	442	–	491	492	494	–
		TotalPower	2,137	2,135	2,130	–	2,414	2,412	2,407	–	2,724	2,721	2,717	–	3,058	3,056	3,051	–	3,432	3,430	3,425	–	3,871	3,869	3,864	–
75	900	Capacity	35,146	35,649	36,712	38,337	34,827	35,330	36,394	38,019	33,897	34,400	35,464	37,089	32,297	32,800	33,864	35,489	30,342	30,845	31,909	33,534	28,557	29,060	30,124	31,749
		S/T	0.61	0.54	0.40	0.26	0.62	0.54	0.41	0.27	1.00	0.57	0.43	0.29	1.00	0.59	0.45	0.31	1.00	0.61	0.48	0.33	1.00	1.00	0.53	0.38
		Evap dT	26.99	25.06	21.45	17.72	26.93	25.00	21.40	17.67	27.20	25.27	21.67	17.94	26.91	24.98	21.38	17.65	26.65	24.73	21.12	17.39	27.86	25.93	22.33	18.60
		Pr Suc	124	125	129	134	132	133	136	142	138	140	143	148	144	145	149	154	149	151	154	160	156	158	161	167
		Pr Dis	254	255	257	262	295	296	298	302	337	338	340	345	383	384	386	390	432	433	435	440	485	486	488	492
		TotalPower	2,090	2,088	2,083	2,104	2,367	2,365	2,360	2,381	2,676	2,674	2,669	2,690	3,011	3,009	3,004	3,025	3,385	3,382	3,378	3,399	3,823	3,821	3,816	3,838
	1250	Capacity	36,097	36,600	37,664	39,289	35,778	36,281	37,345	38,970	34,848	35,351	36,415	38,040	33,249	**33,752**	34,815	36,440	31,294	31,796	32,860	34,485	29,509	30,012	31,075	32,700
		S/T	0.80	0.72	0.58	0.44	1.00	0.73	0.59	0.45	1.00	0.75	0.62	0.47	1.00	**0.77**	0.63	0.49	1.00	1.00	0.66	0.51	1.00	1.00	0.71	0.57
		Evap dT	23.93	22.01	18.40	14.67	23.88	21.95	18.35	14.62	24.15	22.22	18.62	14.89	23.86	**21.93**	18.33	14.60	23.60	21.67	18.07	14.34	24.81	22.88	19.28	15.55
		Pr Suc	128	129	133	138	136	137	140	146	142	144	147	152	148	**150**	153	158	154	155	158	164	161	162	165	171
		Pr Dis	259	261	262	267	300	301	303	307	342	344	345	350	388	**389**	391	396	438	439	441	445	490	491	493	498
		TotalPower	2,128	2,125	2,121	2,142	2,405	2,402	2,398	2,419	2,714	2,712	2,707	2,728	3,048	**3,046**	3,042	3,063	3,422	3,420	3,415	3,437	3,861	3,859	3,854	3,875
	1350	Capacity	36,444	36,947	38,011	39,636	36,126	36,629	37,692	39,317	35,196	35,699	36,763	38,387	33,596	34,099	35,163	36,788	31,641	32,144	33,208	34,833	29,856	30,359	31,423	33,048
		S/T	0.82	0.74	0.61	0.47	1.00	0.75	0.61	0.47	1.00	0.78	0.64	0.50	1.00	0.79	0.66	0.52	1.00	1.00	0.68	0.54	1.00	1.00	0.73	0.59
		Evap dT	23.29	21.36	17.76	14.03	23.24	21.31	17.71	13.98	23.51	21.58	17.98	14.25	23.22	21.29	17.69	13.96	22.96	21.03	17.43	13.70	24.17	22.24	18.64	14.91
		Pr Suc	129	131	134	139	137	138	142	147	144	145	148	154	149	151	154	159	155	156	160	165	162	163	167	172
		Pr Dis	261	262	264	268	301	302	304	309	344	345	347	351	390	391	393	397	439	440	442	446	492	493	495	499
		TotalPower	2,135	2,133	2,129	2,150	2,412	2,410	2,406	2,427	2,722	2,720	2,715	2,736	3,056	3,054	3,049	3,071	3,430	3,428	3,423	3,445	3,869	3,867	3,862	3,883

IDB: Entering Indoor Dry Bulb Temperature

Shaded area reflects ACCA (TVA) conditions

kW = Total system power

High and low pressures are measured at the liquid and suction access fittings.

Amps: Unit amps (comp.+ evaporator + condenser fan motors)

Design Subcooling, 16 - 19 °F @ the liquid access fitting connection ARI 95 test conditions. Design Superheat 8 - 12°F @ the compressor suction access fitting connection.

			Outdoor Ambient Temperature																							
			65				75				85				95				105				115			
			Entering Indoor Wet Bulb Temperature																							
IDB	Airflow	ID WB	59	63	67	71	59	63	67	71	59	63	67	71	59	63	67	71	59	63	67	71	59	63	67	71
80	900	Capacity	35,330	35,833	36,897	38,522	35,012	35,514	36,578	38,203	34,082	34,585	35,648	37,273	32,482	32,985	34,049	35,673	30,527	31,030	32,093	33,718	28,742	29,245	30,309	31,933
		S/T	1.00	0.66	0.53	0.39	1.00	0.67	0.53	0.39	1.00	0.70	0.56	0.42	1.00	1.00	0.58	0.44	1.00	1.00	0.60	0.46	1.00	1.00	0.65	0.51
		Evap dT	31.26	29.33	25.72	21.99	31.20	29.27	25.67	21.94	31.47	29.54	25.94	22.21	31.18	29.25	25.65	21.92	30.92	29.00	25.39	21.66	32.13	30.20	26.60	22.87
		Pr Suc	124	126	129	135	132	134	137	142	139	140	144	149	144	146	149	155	150	152	155	160	157	159	162	167
		Pr Dis	255	256	258	262	295	296	298	303	338	339	341	345	383	385	386	391	433	434	436	440	485	487	488	493
		TotalPower	2,091	2,089	2,084	2,106	2,368	2,366	2,361	2,383	2,678	2,675	2,671	2,692	3,012	3,010	3,005	3,026	3,386	3,384	3,379	3,400	3,825	3,823	3,818	3,839
	1250	Capacity	36,281	36,784	37,848	39,473	35,963	36,466	37,529	39,154	35,033	35,536	36,600	38,224	33,433	33,936	**35,000**	36,625	31,478	31,981	33,045	34,670	29,693	30,196	31,260	32,885
		S/T	1.00	0.85	0.71	0.57	1.00	0.85	0.72	0.57	1.00	0.88	0.74	0.60	1.00	1.00	**0.76**	0.62	1.00	1.00	0.78	0.64	1.00	1.00	0.83	0.69
		Evap dT	28.20	26.28	22.67	18.94	28.15	26.22	22.62	18.89	28.42	26.49	22.89	19.16	28.13	26.20	**22.60**	18.87	27.87	25.95	22.34	18.61	29.08	27.15	23.55	19.82
		Pr Suc	128	130	133	139	136	138	141	146	143	144	148	153	149	150	**153**	159	154	156	159	164	161	163	166	171
		Pr Dis	260	261	263	267	300	302	303	308	343	344	346	350	389	390	**392**	396	438	439	441	445	491	492	494	498
		TotalPower	2,129	2,127	2,122	2,143	2,406	2,404	2,399	2,420	2,715	2,713	2,708	2,730	3,050	3,048	**3,043**	3,064	3,424	3,422	3,417	3,438	3,862	3,860	3,856	3,877
	1350	Capacity	36,629	37,132	38,196	39,820	36,310	36,813	37,877	39,502	35,380	35,883	36,947	38,572	33,781	34,284	35,347	36,972	31,825	32,328	33,392	35,017	30,041	30,544	31,607	33,232
		S/T	1.00	0.87	0.73	0.59	1.00	0.88	0.74	0.60	1.00	1.00	0.77	0.62	1.00	1.00	0.78	0.64	1.00	1.00	0.81	0.66	1.00	1.00	1.00	0.72
		Evap dT	27.56	25.63	22.03	18.30	27.51	25.58	21.98	18.25	27.78	25.85	22.25	18.52	27.49	25.56	21.96	18.23	27.23	25.30	21.70	17.97	28.44	26.51	22.91	19.18
		Pr Suc	130	131	135	140	137	139	142	148	144	146	149	154	150	151	155	160	155	157	160	165	162	164	167	172
		Pr Dis	261	262	264	269	302	303	305	309	344	345	347	352	390	391	393	397	439	441	442	447	492	493	495	499
		TotalPower	2,137	2,135	2,130	2,151	2,414	2,412	2,407	2,428	2,723	2,721	2,716	2,737	3,058	3,056	3,051	3,072	3,432	3,430	3,425	3,446	3,870	3,868	3,863	3,885
85	900	35,930	35,930	36,433	37,497	39,122	35,611	36,114	37,178	38,803	34,682	35,185	36,248	37,873	33,082	33,585	34,649	36,273	31,127	31,630	32,693	34,318	29,342	29,845	30,909	32,533
		1.00	1.00	0.77	0.63	0.49	1.00	1.00	0.64	0.49	1.00	1.00	0.66	0.52	1.00	1.00	0.68	0.54	1.00	1.00	0.70	0.56	1.00	1.00	1.00	0.61
		35.04	35.04	33.11	29.51	25.78	34.99	33.06	29.46	25.73	35.26	33.33	29.73	26.00	34.97	33.04	29.44	25.71	34.71	32.78	29.18	25.45	35.92	33.99	30.39	26.66
		126	126	128	131	136	134	136	139	144	141	142	145	151	146	148	151	156	152	153	157	162	159	160	164	169
		256	256	257	259	263	296	298	299	304	339	340	342	346	385	386	388	392	434	435	437	441	487	488	490	494
		2,097	2,097	2,094	2,090	2,111	2,374	2,371	2,367	2,388	2,683	2,681	2,676	2,697	3,018	3,015	3,011	3,032	3,391	3,389	3,385	3,406	3,830	3,828	3,823	3,844
	1250	36,881	36,881	37,384	38,448	40,073	36,563	37,066	38,129	39,754	35,633	36,136	37,200	38,824	34,033	34,536	35,600	37,225	32,078	32,581	33,645	35,270	30,293	30,796	31,860	33,485
		1.00	1.00	0.95	0.81	0.67	1.00	1.00	0.82	0.67	1.00	1.00	0.84	0.70	1.00	1.00	0.86	0.72	1.00	1.00	1.00	0.74	1.000	1.000	1.000	0.792
		31.99	31.99	30.06	26.46	22.73	31.94	30.01	26.41	22.68	32.21	30.28	26.68	22.95	31.92	29.99	26.39	22.66	31.66	29.73	26.13	22.40	32.87	30.94	27.34	23.61
		130	130	132	135	140	138	140	143	148	145	146	149	155	150	152	155	161	156	158	161	166	163	165	168	173
		261	261	262	264	269	302	303	305	309	344	345	347	352	390	391	393	397	439	440	442	447	492	493	495	499
		2,134	2,134	2,132	2,127	2,149	2,411	2,409	2,404	2,426	2,721	2,718	2,714	2,735	3,055	3,053	3,048	3,069	3,429	3,427	3,422	3,443	3,868	3,866	3,861	3,882
	1350	37,229	37,229	37,732	38,796	40,420	36,910	37,413	38,477	40,102	35,980	36,483	37,547	39,172	34,381	34,884	35,947	37,572	32,425	32,928	33,992	35,617	30,641	31,144	32,207	33,832
		1.00	1.00	0.97	0.84	0.69	1.00	1.00	0.84	0.70	1.00	1.00	0.87	0.72	1.00	1.00	0.89	0.74	1.00	1.00	1.00	0.77	1.00	1.00	1.00	0.82
		31.35	31.35	29.42	25.82	22.09	31.29	29.37	25.76	22.03	31.57	29.64	26.04	22.30	31.28	29.35	25.74	22.01	31.02	29.09	25.49	21.76	32.23	30.30	26.69	22.96
		132	132	133	136	142	139	141	144	149	146	148	151	156	152	153	156	162	157	159	162	167	164	166	169	174
		262	262	264	265	270	303	304	306	310	346	347	348	353	391	392	394	399	441	442	444	448	493	494	496	501
		2,142	2,142	2,140	2,135	2,156	2,419	2,417	2,412	2,434	2,728	2,726	2,722	2,743	3,063	3,061	3,056	3,077	3,437	3,435	3,430	3,451	3,876	3,874	3,869	3,890

IDB: Entering Indoor Dry Bulb Temperature — Shaded area reflects AHRI (TVA) conditions — **kW = Total system power**

High and low pressures are measured at the liquid and suction access fittings. — **Amps: Unit amps (comp.+ evaporator + condenser fan motors)**

Design Subcooling, 16 - 19 °F @ the liquid access fitting connection ARI 95 test conditions. Design Superheat 8 - 12°F @ the compressor suction access fitting connection.

			Outdoor Ambient Temperature																							
			65				75				85				95				105				115			
			Entering Indoor Wet Bulb Temperature																							
IDB	Airflow	ID WB	59	63	67	71	59	63	67	71	59	63	67	71	59	63	67	71	59	63	67	71	59	63	67	71
70	1200	Capacity	46,801	47,469	48,882	–	46,377	47,046	48,459	–	45,142	45,810	47,223	–	43,017	43,685	45,098	–	40,419	41,087	42,500	–	38,048	38,716	40,129	–
		S/T	0.52	0.44	0.31	–	0.52	0.45	0.31	–	0.55	0.47	0.34	–	0.57	0.49	0.36	–	1.00	0.51	0.38	–	1.00	0.57	0.43	–
		Evap dT	22.26	20.33	16.73	–	22.21	20.28	16.68	–	22.48	20.55	16.95	–	22.19	20.26	16.66	–	21.93	20.00	16.40	–	23.14	21.21	17.61	–
		Pr Suc	122	123	127	–	129	131	134	–	136	137	141	–	141	143	146	–	147	148	152	–	154	155	158	–
		Pr Dis	260	261	263	–	301	302	304	–	345	346	348	–	391	393	394	–	442	443	445	–	495	497	498	–
		TotalPower	2,834	2,831	2,825	–	3,188	3,185	3,179	–	3,584	3,581	3,575	–	4,012	4,009	4,003	–	4,490	4,487	4,481	–	5,051	5,048	5,042	–
	1590	Capacity	47,930	48,598	50,011	–	47,506	48,175	49,588	–	46,271	46,939	48,352	–	44,146	44,814	46,227	–	41,548	42,216	43,630	–	39,177	39,845	41,258	–
		S/T	0.67	0.59	0.45	–	0.67	0.60	0.46	–	0.70	0.62	0.49	–	1.00	0.64	0.51	–	1.00	0.66	0.53	–	1.00	0.71	0.58	–
		Evap dT	19.69	17.76	14.16	–	19.64	17.71	14.11	–	19.91	17.98	14.38	–	19.62	17.69	14.09	–	19.36	17.43	13.83	–	20.57	18.64	15.04	–
		Pr Suc	125	127	130	–	133	134	138	–	139	141	144	–	145	147	150	–	150	152	155	–	157	159	162	–
		Pr Dis	265	266	268	–	306	307	309	–	349	350	352	–	396	397	399	–	446	447	449	–	500	501	503	–
		TotalPower	2,874	2,872	2,866	–	3,229	3,226	3,220	–	3,624	3,621	3,615	–	4,052	4,049	4,043	–	4,530	4,528	4,522	–	5,091	5,089	5,083	–
	1800	Capacity	48,723	49,391	50,804	–	48,299	48,967	50,381	–	47,064	47,732	49,145	–	44,939	45,607	47,020	–	42,341	43,009	44,422	–	39,970	40,638	42,051	–
		S/T	0.70	0.63	0.49	–	0.71	0.63	0.50	–	0.73	0.66	0.52	–	1.00	0.68	0.54	–	1.00	0.70	0.56	–	1.00	0.75	0.61	–
		Evap dT	18.66	16.73	13.13	–	18.61	16.68	13.08	–	18.88	16.95	13.35	–	18.59	16.66	13.06	–	18.33	16.40	12.80	–	19.54	17.61	14.01	–
		Pr Suc	127	129	132	–	135	136	140	–	142	143	146	–	147	149	152	–	153	154	157	–	159	161	164	–
		Pr Dis	267	268	270	–	308	309	311	–	352	353	355	–	398	399	401	–	449	450	452	–	502	504	505	–
		TotalPower	2,891	2,888	2,882	–	3,245	3,242	3,236	–	3,640	3,638	3,632	–	4,068	4,066	4,060	–	4,547	4,544	4,538	–	5,108	5,105	5,099	–
75	1200	Capacity	46,828	47,497	48,910	51,069	46,405	47,073	48,486	50,645	45,170	45,838	47,251	49,410	43,044	43,712	45,126	47,284	40,447	41,115	42,528	44,687	38,075	38,744	40,157	42,315
		S/T	0.65	0.57	0.44	0.29	0.65	0.58	0.44	0.30	1.00	0.60	0.47	0.32	1.00	0.62	0.49	0.34	1.00	0.64	0.51	0.37	1.00	1.00	0.56	0.42
		Evap dT	26.50	24.58	20.97	17.24	26.45	24.52	20.92	17.19	26.72	24.79	21.19	17.46	26.43	24.50	20.90	17.17	26.17	24.25	20.64	16.91	27.38	25.45	21.85	18.12
		Pr Suc	122	123	127	132	129	131	134	139	136	137	141	146	142	143	146	151	147	149	152	157	154	155	158	164
		Pr Dis	260	261	263	268	302	303	305	309	345	346	348	352	392	393	395	399	442	443	445	450	496	497	499	503
		TotalPower	2,832	2,829	2,823	2,850	3,186	3,183	3,177	3,204	3,581	3,579	3,573	3,600	4,009	4,007	4,001	4,028	4,488	4,485	4,479	4,506	5,049	5,046	5,040	5,067
	1590	Capacity	47,957	48,626	50,039	52,198	47,534	48,202	49,615	51,774	46,299	46,967	48,380	50,539	44,173	**44,841**	46,255	48,413	41,576	42,244	43,657	45,816	39,204	39,873	41,286	43,445
		S/T	0.80	0.72	0.58	0.44	0.80	0.73	0.59	0.45	1.00	0.75	0.62	0.47	1.00	**0.77**	0.63	0.49	1.00	0.79	0.66	0.51	1.00	1.00	0.71	0.57
		Evap dT	23.93	22.01	18.40	14.67	23.88	21.95	18.35	14.62	24.15	22.22	18.62	14.89	23.86	**21.93**	18.33	14.60	23.60	21.67	18.07	14.34	24.81	22.88	19.28	15.55
		Pr Suc	125	127	130	135	133	134	138	143	139	141	144	149	145	**147**	150	155	150	152	155	160	157	159	162	167
		Pr Dis	265	266	268	272	306	307	309	314	350	351	353	357	396	**397**	399	404	447	448	450	454	500	501	503	508
		TotalPower	2,872	2,869	2,863	2,890	3,226	3,224	3,218	3,245	3,622	3,619	3,613	3,640	4,050	**4,047**	4,041	4,068	4,528	4,525	4,519	4,546	5,089	5,086	5,080	5,107
	1800	Capacity	48,750	49,419	50,832	52,990	48,327	48,995	50,408	52,567	47,092	47,760	49,173	51,332	44,966	45,634	47,048	49,206	42,369	43,037	44,450	46,609	39,997	40,665	42,079	44,237
		S/T	0.83	0.75	0.62	0.48	1.00	0.76	0.63	0.48	1.00	0.79	0.65	0.51	1.00	0.81	0.67	0.53	1.00	0.83	0.69	0.55	1.00	1.00	0.74	0.60
		Evap dT	22.90	20.97	17.37	13.64	22.85	20.92	17.32	13.59	23.12	21.19	17.59	13.86	22.83	20.90	17.30	13.57	22.57	20.64	17.04	13.31	23.78	21.85	18.25	14.52
		Pr Suc	127	129	132	137	135	137	140	145	142	143	146	152	147	149	152	157	153	154	157	163	159	161	164	169
		Pr Dis	267	268	270	275	308	310	311	316	352	353	355	359	399	400	402	406	449	450	452	456	503	504	506	510
		TotalPower	2,888	2,886	2,880	2,907	3,243	3,240	3,234	3,261	3,638	3,635	3,629	3,656	4,066	4,063	4,057	4,084	4,544	4,542	4,536	4,563	5,105	5,103	5,097	5,124

IDB: Entering Indoor Dry Bulb Temperature

Shaded area reflects ACCA (TVA) conditions

kW = Total system power

High and low pressures are measured at the liquid and suction access fittings.

Amps: Unit amps (comp.+ evaporator + condenser fan motors)

Design Subcooling, 16 - 19 °F @ the liquid access fitting connection ARI 95 test conditions. Design Superheat 8 - 12°F @ the compressor suction access fitting connection.

			Outdoor Ambient Temperature																							
			65				75				85				95				105				115			
			Entering Indoor Wet Bulb Temperature																							
IDB	Airflow	ID WB	59	63	67	71	59	63	67	71	59	63	67	71	59	63	67	71	59	63	67	71	59	63	67	71
80	1200	Capacity	47,073	47,742	49,155	51,314	46,650	47,318	48,731	50,890	45,415	46,083	47,496	49,655	43,289	43,957	45,371	47,529	40,692	41,360	42,773	44,932	38,320	38,989	40,402	42,561
		S/T	0.77	0.70	0.56	0.42	1.00	0.70	0.57	0.42	1.00	0.73	0.59	0.45	1.00	0.75	0.61	0.47	1.00	1.00	0.63	0.49	1.00	1.00	0.69	0.54
		Evap dT	30.77	28.85	25.24	21.51	30.72	28.79	25.19	21.46	30.99	29.06	25.46	21.73	30.70	28.77	25.17	21.44	30.44	28.52	24.91	21.18	31.65	29.72	26.12	22.39
		Pr Suc	122	124	127	132	130	131	135	140	137	138	141	146	142	144	147	152	148	149	152	157	154	156	159	164
		Pr Dis	261	262	264	268	302	303	305	310	345	347	348	353	392	393	395	400	442	444	445	450	496	497	499	504
		TotalPower	2,833	2,831	2,825	2,852	3,188	3,185	3,179	3,206	3,583	3,580	3,574	3,601	4,011	4,008	4,002	4,029	4,489	4,487	4,481	4,508	5,050	5,048	5,042	5,069
	1590	Capacity	48,203	48,871	50,284	52,443	47,779	48,447	49,860	52,019	46,544	47,212	48,625	50,784	44,418	45,086	**46,500**	48,658	41,821	42,489	43,902	46,061	39,449	40,118	41,531	43,690
		S/T	1.00	0.85	0.71	0.57	1.00	0.85	0.72	0.57	1.00	0.88	0.74	0.60	1.00	1.00	**0.76**	0.62	1.00	1.00	0.78	0.64	1.00	1.00	0.83	0.69
		Evap dT	28.20	26.28	22.67	18.94	28.15	26.22	22.62	18.89	28.42	26.49	22.89	19.16	28.13	26.20	**22.60**	18.87	27.87	25.95	22.34	18.61	29.08	27.15	23.55	19.82
		Pr Suc	126	127	131	136	133	135	138	143	140	142	145	150	146	147	**150**	155	151	153	156	161	158	159	163	168
		Pr Dis	265	266	268	273	307	308	310	314	350	351	353	358	397	398	**400**	404	447	448	450	455	501	502	504	508
		TotalPower	2,874	2,871	2,865	2,892	3,228	3,226	3,219	3,247	3,624	3,621	3,615	3,642	4,052	4,049	**4,043**	4,070	4,530	4,527	4,521	4,548	5,091	5,088	5,082	5,109
	1800	Capacity	48,995	49,664	51,077	53,236	48,572	49,240	50,653	52,812	47,337	48,005	49,418	51,577	45,211	45,879	47,293	49,451	42,614	43,282	44,695	46,854	40,242	40,911	42,324	44,483
		S/T	1.00	0.88	0.74	0.60	1.00	0.89	0.75	0.61	1.00	0.91	0.78	0.63	1.00	1.00	0.80	0.65	1.00	1.00	0.82	0.67	1.00	1.00	0.87	0.73
		Evap dT	27.17	25.24	21.64	17.91	27.12	25.19	21.59	17.86	27.39	25.46	21.86	18.13	27.10	25.17	21.57	17.84	26.84	24.91	21.31	17.58	28.05	26.12	22.52	18.79
		Pr Suc	128	130	133	138	136	137	140	145	142	144	147	152	148	149	152	158	153	155	158	163	160	162	165	170
		Pr Dis	268	269	271	275	309	310	312	317	352	353	355	360	399	400	402	407	449	450	452	457	503	504	506	511
		TotalPower	2,890	2,887	2,881	2,909	3,245	3,242	3,236	3,263	3,640	3,637	3,631	3,658	4,068	4,065	4,059	4,086	4,546	4,543	4,537	4,564	5,107	5,104	5,098	5,126
85	1200	Capacity	47,871	48,539	49,952	52,111	47,447	48,115	49,529	51,687	46,212	46,880	48,293	50,452	44,086	44,755	46,168	48,326	41,489	42,157	43,570	45,729	39,118	39,786	41,199	43,358
		S/T	1.00	0.80	0.66	0.52	1.00	0.80	0.67	0.53	1.00	1.00	0.69	0.55	1.00	1.00	0.71	0.57	1.00	1.00	0.74	0.59	1.00	1.00	1.00	0.64
		Evap dT	34.56	32.63	29.03	25.30	34.51	32.58	28.98	25.25	34.78	32.85	29.25	25.52	34.49	32.56	28.96	25.23	34.23	32.30	28.70	24.97	35.44	33.51	29.91	26.18
		Pr Suc	124	126	129	134	132	133	136	142	138	140	143	148	144	145	149	154	149	151	154	159	156	158	161	166
		Pr Dis	262	263	265	269	303	304	306	311	347	348	350	354	393	394	396	401	444	445	447	451	497	499	500	505
		TotalPower	2,840	2,837	2,831	2,858	3,195	3,192	3,186	3,213	3,590	3,587	3,581	3,608	4,018	4,015	4,009	4,036	4,496	4,493	4,487	4,514	5,057	5,054	5,048	5,075
	1590	Capacity	49,000	49,668	51,081	53,240	48,576	49,244	50,658	52,816	47,341	48,009	49,422	51,581	45,215	45,884	47,297	49,456	42,618	43,286	44,699	46,858	40,247	40,915	42,328	44,487
		S/T	1.00	0.95	0.81	0.67	1.00	1.00	0.82	0.67	1.00	1.00	0.84	0.70	1.00	1.00	0.86	0.72	1.00	1.00	0.88	0.74	1.000	1.000	1.000	0.792
		Evap dT	31.99	30.06	26.46	22.73	31.94	30.01	26.41	22.68	32.21	30.28	26.68	22.95	31.92	29.99	26.39	22.66	31.66	29.73	26.13	22.40	32.87	30.94	27.34	23.61
		Pr Suc	128	129	132	138	135	137	140	145	142	143	147	152	147	149	152	157	153	154	158	163	160	161	164	170
		Pr Dis	266	268	269	274	308	309	311	315	351	352	354	359	398	399	401	406	448	449	451	456	502	503	505	510
		TotalPower	2,881	2,878	2,872	2,899	3,235	3,232	3,226	3,253	3,631	3,628	3,622	3,649	4,059	4,056	4,050	4,077	4,537	4,534	4,528	4,555	5,098	5,095	5,089	5,116
	1800	Capacity	49,793	50,461	51,874	54,033	49,369	50,037	51,451	53,609	48,134	48,802	50,215	52,374	46,008	46,677	48,090	50,248	43,411	44,079	45,492	47,651	41,039	41,708	43,121	45,280
		S/T	1.00	0.98	0.85	0.70	1.00	1.00	0.85	0.71	1.00	1.00	0.88	0.73	1.00	1.00	0.90	0.75	1.00	1.00	1.00	0.78	1.00	1.00	1.00	0.83
		Evap dT	30.96	29.03	25.43	21.70	30.91	28.98	25.38	21.64	31.18	29.25	25.65	21.91	30.89	28.96	25.36	21.62	30.63	28.70	25.10	21.37	31.84	29.91	26.31	22.57
		Pr Suc	130	131	135	140	137	139	142	147	144	146	149	154	150	151	154	159	155	157	160	165	162	163	167	172
		Pr Dis	269	270	272	276	310	311	313	318	354	355	357	361	400	401	403	408	451	452	454	458	504	505	507	512
		TotalPower	2,897	2,894	2,888	2,915	3,251	3,249	3,242	3,270	3,647	3,644	3,638	3,665	4,075	4,072	4,066	4,093	4,553	4,550	4,544	4,571	5,114	5,111	5,105	5,132

IDB: Entering Indoor Dry Bulb Temperature — Shaded area reflects AHRI (TVA) conditions — **kW = Total system power**

High and low pressures are measured at the liquid and suction access fittings. — **Amps: Unit amps (comp.+ evaporator + condenser fan motors)**

Design Subcooling, 16 - 19 °F @ the liquid access fitting connection ARI 95 test conditions. Design Superheat 8 - 12°F @ the compressor suction access fitting connection.

			Outdoor Ambient Temperature																							
			65				75				85				95				105				115			
			Entering Indoor Wet Bulb Temperature																							
IDB	Airflow	ID WB	59	63	67	71	59	63	67	71	59	63	67	71	59	63	67	71	59	63	67	71	59	63	67	71
70	1200	Capacity	46,801	47,469	48,882	–	46,377	47,046	48,459	–	45,142	45,810	47,223	–	43,017	43,685	45,098	–	40,419	41,087	42,500	–	38,048	38,716	40,129	–
		S/T	0.52	0.44	0.31	–	0.52	0.45	0.31	–	0.55	0.47	0.34	–	0.57	0.49	0.36	–	1.00	0.51	0.38	–	1.00	0.57	0.43	–
		Evap dT	22.26	20.33	16.73	–	22.21	20.28	16.68	–	22.48	20.55	16.95	–	22.19	20.26	16.66	–	21.93	20.00	16.40	–	23.14	21.21	17.61	–
		Pr Suc	122	123	127	–	129	131	134	–	136	137	141	–	141	143	146	–	147	148	152	–	154	155	158	–
		Pr Dis	260	261	263	–	301	302	304	–	345	346	348	–	391	393	394	–	442	443	445	–	495	497	498	–
		TotalPower	2,834	2,831	2,825	–	3,188	3,185	3,179	–	3,584	3,581	3,575	–	4,012	4,009	4,003	–	4,490	4,487	4,481	–	5,051	5,048	5,042	–
	1590	Capacity	47,930	48,598	50,011	–	47,506	48,175	49,588	–	46,271	46,939	48,352	–	44,146	44,814	46,227	–	41,548	42,216	43,630	–	39,177	39,845	41,258	–
		S/T	0.67	0.59	0.45	–	0.67	0.60	0.46	–	0.70	0.62	0.49	–	1.00	0.64	0.51	–	1.00	0.66	0.53	–	1.00	0.71	0.58	–
		Evap dT	19.69	17.76	14.16	–	19.64	17.71	14.11	–	19.91	17.98	14.38	–	19.62	17.69	14.09	–	19.36	17.43	13.83	–	20.57	18.64	15.04	–
		Pr Suc	125	127	130	–	133	134	138	–	139	141	144	–	145	147	150	–	150	152	155	–	157	159	162	–
		Pr Dis	265	266	268	–	306	307	309	–	349	350	352	–	396	397	399	–	446	447	449	–	500	501	503	–
		TotalPower	2,874	2,872	2,866	–	3,229	3,226	3,220	–	3,624	3,621	3,615	–	4,052	4,049	4,043	–	4,530	4,528	4,522	–	5,091	5,089	5,083	–
	1800	Capacity	48,723	49,391	50,804	–	48,299	48,967	50,381	–	47,064	47,732	49,145	–	44,939	45,607	47,020	–	42,341	43,009	44,422	–	39,970	40,638	42,051	–
		S/T	0.70	0.63	0.49	–	0.71	0.63	0.50	–	0.73	0.66	0.52	–	1.00	0.68	0.54	–	1.00	0.70	0.56	–	1.00	0.75	0.61	–
		Evap dT	18.66	16.73	13.13	–	18.61	16.68	13.08	–	18.88	16.95	13.35	–	18.59	16.66	13.06	–	18.33	16.40	12.80	–	19.54	17.61	14.01	–
		Pr Suc	127	129	132	–	135	136	140	–	142	143	146	–	147	149	152	–	153	154	157	–	159	161	164	–
		Pr Dis	267	268	270	–	308	309	311	–	352	353	355	–	398	399	401	–	449	450	452	–	502	504	505	–
		TotalPower	2,891	2,888	2,882	–	3,245	3,242	3,236	–	3,640	3,638	3,632	–	4,068	4,066	4,060	–	4,547	4,544	4,538	–	5,108	5,105	5,099	–
75	1200	Capacity	46,828	47,497	48,910	51,069	46,405	47,073	48,486	50,645	45,170	45,838	47,251	49,410	43,044	43,712	45,126	47,284	40,447	41,115	42,528	44,687	38,075	38,744	40,157	42,315
		S/T	0.65	0.57	0.44	0.29	0.65	0.58	0.44	0.30	1.00	0.60	0.47	0.32	1.00	0.62	0.49	0.34	1.00	0.64	0.51	0.37	1.00	1.00	0.56	0.42
		Evap dT	26.50	24.58	20.97	17.24	26.45	24.52	20.92	17.19	26.72	24.79	21.19	17.46	26.43	24.50	20.90	17.17	26.17	24.25	20.64	16.91	27.38	25.45	21.85	18.12
		Pr Suc	122	123	127	132	129	131	134	139	136	137	141	146	142	143	146	151	147	149	152	157	154	155	158	164
		Pr Dis	260	261	263	268	302	303	305	309	345	346	348	352	392	393	395	399	442	443	445	450	496	497	499	503
		TotalPower	2,832	2,829	2,823	2,850	3,186	3,183	3,177	3,204	3,581	3,579	3,573	3,600	4,009	4,007	4,001	4,028	4,488	4,485	4,479	4,506	5,049	5,046	5,040	5,067
	1590	Capacity	47,957	48,626	50,039	52,198	47,534	48,202	49,615	51,774	46,299	46,967	48,380	50,539	44,173	**44,841**	46,255	48,413	41,576	42,244	43,657	45,816	39,204	39,873	41,286	43,445
		S/T	0.80	0.72	0.58	0.44	0.80	0.73	0.59	0.45	1.00	0.75	0.62	0.47	1.00	**0.77**	0.63	0.49	1.00	0.79	0.66	0.51	1.00	1.00	0.71	0.57
		Evap dT	23.93	22.01	18.40	14.67	23.88	21.95	18.35	14.62	24.15	22.22	18.62	14.89	23.86	**21.93**	18.33	14.60	23.60	21.67	18.07	14.34	24.81	22.88	19.28	15.55
		Pr Suc	125	127	130	135	133	134	138	143	139	141	144	149	145	**147**	150	155	150	152	155	160	157	159	162	167
		Pr Dis	265	266	268	272	306	307	309	314	350	351	353	357	396	**397**	399	404	447	448	450	454	500	501	503	508
		TotalPower	2,872	2,869	2,863	2,890	3,226	3,224	3,218	3,245	3,622	3,619	3,613	3,640	4,050	**4,047**	4,041	4,068	4,528	4,525	4,519	4,546	5,089	5,086	5,080	5,107
	1800	Capacity	48,750	49,419	50,832	52,990	48,327	48,995	50,408	52,567	47,092	47,760	49,173	51,332	44,966	45,634	47,048	49,206	42,369	43,037	44,450	46,609	39,997	40,665	42,079	44,237
		S/T	0.83	0.75	0.62	0.48	1.00	0.76	0.63	0.48	1.00	0.79	0.65	0.51	1.00	0.81	0.67	0.53	1.00	0.83	0.69	0.55	1.00	1.00	0.74	0.60
		Evap dT	22.90	20.97	17.37	13.64	22.85	20.92	17.32	13.59	23.12	21.19	17.59	13.86	22.83	20.90	17.30	13.57	22.57	20.64	17.04	13.31	23.78	21.85	18.25	14.52
		Pr Suc	127	129	132	137	135	137	140	145	142	143	146	152	147	149	152	157	153	154	157	163	159	161	164	169
		Pr Dis	267	268	270	275	308	310	311	316	352	353	355	359	399	400	402	406	449	450	452	456	503	504	506	510
		TotalPower	2,888	2,886	2,880	2,907	3,243	3,240	3,234	3,261	3,638	3,635	3,629	3,656	4,066	4,063	4,057	4,084	4,544	4,542	4,536	4,563	5,105	5,103	5,097	5,124

IDB: Entering Indoor Dry Bulb Temperature

Shaded area reflects ACCA (TVA) conditions

kW = Total system power

High and low pressures are measured at the liquid and suction access fittings.

Amps: Unit amps (comp.+ evaporator + condenser fan motors)

Design Subcooling, 16 - 19 °F @ the liquid access fitting connection ARI 95 test conditions. Design Superheat 8 - 12°F @ the compressor suction access fitting connection.

			Outdoor Ambient Temperature																							
			65				75				85				95				105				115			
			Entering Indoor Wet Bulb Temperature																							
IDB	Airflow	ID WB	59	63	67	71	59	63	67	71	59	63	67	71	59	63	67	71	59	63	67	71	59	63	67	71
80	1200	Capacity	47,073	47,742	49,155	51,314	46,650	47,318	48,731	50,890	45,415	46,083	47,496	49,655	43,289	43,957	45,371	47,529	40,692	41,360	42,773	44,932	38,320	38,989	40,402	42,561
		S/T	0.77	0.70	0.56	0.42	1.00	0.70	0.57	0.42	1.00	0.73	0.59	0.45	1.00	0.75	0.61	0.47	1.00	1.00	0.63	0.49	1.00	1.00	0.69	0.54
		Evap dT	30.77	28.85	25.24	21.51	30.72	28.79	25.19	21.46	30.99	29.06	25.46	21.73	30.70	28.77	25.17	21.44	30.44	28.52	24.91	21.18	31.65	29.72	26.12	22.39
		Pr Suc	122	124	127	132	130	131	135	140	137	138	141	146	142	144	147	152	148	149	152	157	154	156	159	164
		Pr Dis	261	262	264	268	302	303	305	310	345	347	348	353	392	393	395	400	442	444	445	450	496	497	499	504
		TotalPower	2,833	2,831	2,825	2,852	3,188	3,185	3,179	3,206	3,583	3,580	3,574	3,601	4,011	4,008	4,002	4,029	4,489	4,487	4,481	4,508	5,050	5,048	5,042	5,069
	1590	Capacity	48,203	48,871	50,284	52,443	47,779	48,447	49,860	52,019	46,544	47,212	48,625	50,784	44,418	45,086	**46,500**	48,658	41,821	42,489	43,902	46,061	39,449	40,118	41,531	43,690
		S/T	1.00	0.85	0.71	0.57	1.00	0.85	0.72	0.57	1.00	0.88	0.74	0.60	1.00	1.00	**0.76**	0.62	1.00	1.00	0.78	0.64	1.00	1.00	0.83	0.69
		Evap dT	28.20	26.28	22.67	18.94	28.15	26.22	22.62	18.89	28.42	26.49	22.89	19.16	28.13	26.20	**22.60**	18.87	27.87	25.95	22.34	18.61	29.08	27.15	23.55	19.82
		Pr Suc	126	127	131	136	133	135	138	143	140	142	145	150	146	147	**150**	155	151	153	156	161	158	159	163	168
		Pr Dis	265	266	268	273	307	308	310	314	350	351	353	358	397	398	**400**	404	447	448	450	455	501	502	504	508
		TotalPower	2,874	2,871	2,865	2,892	3,228	3,226	3,219	3,247	3,624	3,621	3,615	3,642	4,052	4,049	**4,043**	4,070	4,530	4,527	4,521	4,548	5,091	5,088	5,082	5,109
	1800	Capacity	48,995	49,664	51,077	53,236	48,572	49,240	50,653	52,812	47,337	48,005	49,418	51,577	45,211	45,879	47,293	49,451	42,614	43,282	44,695	46,854	40,242	40,911	42,324	44,483
		S/T	1.00	0.88	0.74	0.60	1.00	0.89	0.75	0.61	1.00	0.91	0.78	0.63	1.00	1.00	0.80	0.65	1.00	1.00	0.82	0.67	1.00	1.00	0.87	0.73
		Evap dT	27.17	25.24	21.64	17.91	27.12	25.19	21.59	17.86	27.39	25.46	21.86	18.13	27.10	25.17	21.57	17.84	26.84	24.91	21.31	17.58	28.05	26.12	22.52	18.79
		Pr Suc	128	130	133	138	136	137	140	145	142	144	147	152	148	149	152	158	153	155	158	163	160	162	165	170
		Pr Dis	268	269	271	275	309	310	312	317	352	353	355	360	399	400	402	407	449	450	452	457	503	504	506	511
		TotalPower	2,890	2,887	2,881	2,909	3,245	3,242	3,236	3,263	3,640	3,637	3,631	3,658	4,068	4,065	4,059	4,086	4,546	4,543	4,537	4,564	5,107	5,104	5,098	5,126
85	1200	Capacity	47,871	48,539	49,952	52,111	47,447	48,115	49,529	51,687	46,212	46,880	48,293	50,452	44,086	44,755	46,168	48,326	41,489	42,157	43,570	45,729	39,118	39,786	41,199	43,358
		S/T	1.00	0.80	0.66	0.52	1.00	0.80	0.67	0.53	1.00	1.00	0.69	0.55	1.00	1.00	0.71	0.57	1.00	1.00	0.74	0.59	1.00	1.00	1.00	0.64
		Evap dT	34.56	32.63	29.03	25.30	34.51	32.58	28.98	25.25	34.78	32.85	29.25	25.52	34.49	32.56	28.96	25.23	34.23	32.30	28.70	24.97	35.44	33.51	29.91	26.18
		Pr Suc	124	126	129	134	132	133	136	142	138	140	143	148	144	145	149	154	149	151	154	159	156	158	161	166
		Pr Dis	262	263	265	269	303	304	306	311	347	348	350	354	393	394	396	401	444	445	447	451	497	499	500	505
		TotalPower	2,840	2,837	2,831	2,858	3,195	3,192	3,186	3,213	3,590	3,587	3,581	3,608	4,018	4,015	4,009	4,036	4,496	4,493	4,487	4,514	5,057	5,054	5,048	5,075
	1590	Capacity	49,000	49,668	51,081	53,240	48,576	49,244	50,658	52,816	47,341	48,009	49,422	51,581	45,215	45,884	47,297	49,456	42,618	43,286	44,699	46,858	40,247	40,915	42,328	44,487
		S/T	1.00	0.95	0.81	0.67	1.00	1.00	0.82	0.67	1.00	1.00	0.84	0.70	1.00	1.00	0.86	0.72	1.00	1.00	0.88	0.74	1.000	1.000	1.000	0.792
		Evap dT	31.99	30.06	26.46	22.73	31.94	30.01	26.41	22.68	32.21	30.28	26.68	22.95	31.92	29.99	26.39	22.66	31.66	29.73	26.13	22.40	32.87	30.94	27.34	23.61
		Pr Suc	128	129	132	138	135	137	140	145	142	143	147	152	147	149	152	157	153	154	158	163	160	161	164	170
		Pr Dis	266	268	269	274	308	309	311	315	351	352	354	359	398	399	401	406	448	449	451	456	502	503	505	510
		TotalPower	2,881	2,878	2,872	2,899	3,235	3,232	3,226	3,253	3,631	3,628	3,622	3,649	4,059	4,056	4,050	4,077	4,537	4,534	4,528	4,555	5,098	5,095	5,089	5,116
	1800	Capacity	49,793	50,461	51,874	54,033	49,369	50,037	51,451	53,609	48,134	48,802	50,215	52,374	46,008	46,677	48,090	50,248	43,411	44,079	45,492	47,651	41,039	41,708	43,121	45,280
		S/T	1.00	0.98	0.85	0.70	1.00	1.00	0.85	0.71	1.00	1.00	0.88	0.73	1.00	1.00	0.90	0.75	1.00	1.00	1.00	0.78	1.00	1.00	1.00	0.83
		Evap dT	30.96	29.03	25.43	21.70	30.91	28.98	25.38	21.64	31.18	29.25	25.65	21.91	30.89	28.96	25.36	21.62	30.63	28.70	25.10	21.37	31.84	29.91	26.31	22.57
		Pr Suc	130	131	135	140	137	139	142	147	144	146	149	154	150	151	154	159	155	157	160	165	162	163	167	172
		Pr Dis	269	270	272	276	310	311	313	318	354	355	357	361	400	401	403	408	451	452	454	458	504	505	507	512
		TotalPower	2,897	2,894	2,888	2,915	3,251	3,249	3,242	3,270	3,647	3,644	3,638	3,665	4,075	4,072	4,066	4,093	4,553	4,550	4,544	4,571	5,114	5,111	5,105	5,132

IDB: Entering Indoor Dry Bulb Temperature Shaded area reflects AHRI (TVA) conditions **kW = Total system power**

High and low pressures are measured at the liquid and suction access fittings. **Amps: Unit amps (comp.+ evaporator + condenser fan motors)**

Design Subcooling, 16 - 19 °F @ the liquid access fitting connection ARI 95 test conditions. Design Superheat 8 - 12°F @ the compressor suction access fitting connection.

			Outdoor Ambient Temperature																							
			65				75				85				95				105				115			
			Entering Indoor Wet Bulb Temperature																							
IDB	Airflow	ID WB	59	63	67	71	59	63	67	71	59	63	67	71	59	63	67	71	59	63	67	71	59	63	67	71
70	1500	Capacity	58,154	58,973	60,705	–	57,635	58,454	60,186	–	56,120	56,939	58,672	–	53,515	54,334	56,066	–	50,331	51,150	52,882	–	47,424	48,243	49,976	–
		S/T	0.60	0.53	0.39	–	0.60	0.53	0.40	–	0.63	0.56	0.42	–	0.65	0.57	0.44	–	1.00	0.60	0.46	–	1.00	0.64	0.51	–
		Evap dT	20.57	18.64	15.04	–	20.52	18.59	14.99	–	20.79	18.86	15.26	–	20.50	18.57	14.97	–	20.24	18.31	14.71	–	21.45	19.52	15.92	–
		Pr Suc	120	121	124	–	127	128	131	–	133	135	138	–	139	140	143	–	144	145	149	–	151	152	155	–
		Pr Dis	256	257	259	–	297	298	299	–	339	340	342	–	384	385	387	–	433	435	436	–	486	487	489	–
		TotalPower	3,520	3,517	3,509	–	3,951	3,947	3,940	–	4,431	4,428	4,421	–	4,951	4,948	4,941	–	5,532	5,529	5,522	–	6,214	6,211	6,203	–
	1660	Capacity	58,753	59,572	61,304	–	58,234	59,053	60,785	–	56,719	57,538	59,271	–	54,114	54,933	56,665	–	50,930	51,749	53,481	–	48,023	48,842	50,575	–
		S/T	0.64	0.57	0.44	–	0.65	0.57	0.44	–	0.67	0.60	0.47	–	0.69	0.62	0.49	–	1.00	0.64	0.51	–	1.00	0.69	0.56	–
		Evap dT	19.69	17.76	14.16	–	19.64	17.71	14.11	–	19.91	17.98	14.38	–	19.62	17.69	14.09	–	19.36	17.43	13.83	–	20.57	18.64	15.04	–
		Pr Suc	121	123	126	–	128	130	133	–	135	136	139	–	140	142	145	–	145	147	150	–	152	153	156	–
		Pr Dis	258	259	261	–	298	299	301	–	341	342	343	–	386	387	389	–	435	436	438	–	487	489	490	–
		TotalPower	3,537	3,534	3,526	–	3,968	3,964	3,957	–	4,448	4,445	4,437	–	4,968	4,965	4,957	–	5,549	5,546	5,538	–	6,231	6,227	6,220	–
	2250	Capacity	61,857	62,676	64,409	–	61,338	62,157	63,890	–	59,824	60,643	62,375	–	57,219	58,038	59,770	–	54,035	54,854	56,586	–	51,128	51,947	53,679	–
		S/T	0.68	0.60	0.47	–	0.68	0.61	0.48	–	0.71	0.63	0.50	–	1.00	0.65	0.52	–	1.00	0.67	0.54	–	1.00	0.72	0.59	–
		Evap dT	17.16	15.23	11.63	–	17.11	15.18	11.58	–	17.38	15.45	11.85	–	17.09	15.16	11.56	–	16.83	14.90	11.30	–	18.04	16.11	12.51	–
		Pr Suc	127	129	132	–	135	136	139	–	141	142	146	–	146	148	151	–	152	153	156	–	158	160	163	–
		Pr Dis	264	265	267	–	304	306	307	–	347	348	350	–	392	393	395	–	441	442	444	–	494	495	497	–
		TotalPower	3,585	3,582	3,574	–	4,016	4,012	4,005	–	4,496	4,493	4,486	–	5,016	5,013	5,006	–	5,597	5,594	5,587	–	6,279	6,276	6,268	–
75	1500	Capacity	58,187	59,007	60,739	63,385	57,668	58,487	60,220	62,866	56,154	56,973	58,705	61,352	53,549	54,368	56,100	58,746	50,365	51,184	52,916	55,562	47,458	48,277	50,009	52,655
		S/T	0.72	0.65	0.52	0.38	0.73	0.66	0.52	0.39	1.00	0.68	0.55	0.41	1.00	0.70	0.57	0.43	1.00	0.72	0.59	0.45	1.00	0.77	0.64	0.50
		Evap dT	24.81	22.88	19.28	15.55	24.76	22.83	19.23	15.50	25.03	23.10	19.50	15.77	24.74	22.81	19.21	15.48	24.48	22.55	18.95	15.22	25.69	23.76	20.16	16.43
		Pr Suc	120	121	124	129	127	128	132	137	133	135	138	143	139	140	143	148	144	146	149	154	151	152	155	160
		Pr Dis	256	258	259	264	297	298	300	304	339	340	342	346	385	386	388	392	434	435	437	441	486	487	489	493
		TotalPower	3,517	3,514	3,507	3,540	3,948	3,945	3,937	3,970	4,428	4,425	4,418	4,451	4,949	4,945	4,938	4,971	5,530	5,526	5,519	5,552	6,211	6,208	6,201	6,233
	1660	Capacity	58,787	59,606	61,338	63,984	58,267	59,087	60,819	63,465	56,753	57,572	59,305	61,951	54,148	**54,967**	56,699	59,345	50,964	51,783	53,515	56,161	48,057	48,876	50,608	53,255
		S/T	0.76	0.69	0.56	0.42	0.77	0.70	0.57	0.43	1.00	0.72	0.59	0.45	1.00	**0.74**	0.61	0.47	1.00	0.76	0.63	0.49	1.00	0.81	0.68	0.54
		Evap dT	23.93	22.01	18.40	14.67	23.88	21.95	18.35	14.62	24.15	22.22	18.62	14.89	23.86	**21.93**	18.33	14.60	23.60	21.67	18.07	14.34	24.81	22.88	19.28	15.55
		Pr Suc	121	123	126	131	128	130	133	138	135	136	139	144	140	**142**	145	150	145	147	150	155	152	153	157	162
		Pr Dis	258	259	261	265	298	300	301	306	341	342	344	348	386	**387**	389	394	435	436	438	443	488	489	491	495
		TotalPower	3,534	3,531	3,523	3,556	3,965	3,961	3,954	3,987	4,445	4,442	4,435	4,467	4,965	**4,962**	4,955	4,988	5,546	5,543	5,536	5,569	6,228	6,225	6,217	6,250
	2250	Capacity	61,891	62,710	64,443	67,089	61,372	62,191	63,923	66,570	59,858	60,677	62,409	65,055	57,252	58,072	59,804	62,450	54,068	54,887	56,620	59,266	51,162	51,981	53,713	56,359
		S/T	0.80	0.73	0.60	0.46	1.00	0.73	0.60	0.47	1.00	0.76	0.63	0.49	1.00	0.78	0.65	0.51	1.00	0.80	0.67	0.53	1.00	1.00	0.72	0.58
		Evap dT	21.40	19.47	15.87	12.14	21.35	19.42	15.82	12.08	21.62	19.69	16.09	12.36	21.33	19.40	15.80	12.07	21.07	19.14	15.54	11.81	22.28	20.35	16.75	13.02
		Pr Suc	127	129	132	137	135	136	139	144	141	142	146	151	146	148	151	156	152	153	156	161	158	160	163	168
		Pr Dis	264	265	267	272	305	306	308	312	347	348	350	354	392	394	395	400	442	443	444	449	494	495	497	501
		TotalPower	3,582	3,579	3,572	3,605	4,013	4,010	4,002	4,035	4,493	4,490	4,483	4,516	5,013	5,010	5,003	5,036	5,595	5,591	5,584	5,617	6,276	6,273	6,265	6,298

IDB: Entering Indoor Dry Bulb Temperature

Shaded area reflects ACCA (TVA) conditions

kW = Total system power

High and low pressures are measured at the liquid and suction access fittings.

Amps: Unit amps (comp.+ evaporator + condenser fan motors)

Design Subcooling, 16 - 19 °F @ the liquid access fitting connection ARI 95 test conditions. Design Superheat 8 - 12°F @ the compressor suction access fitting connection.

			Outdoor Ambient Temperature																							
			65				75				85				95				105				115			
			Entering Indoor Wet Bulb Temperature																							
IDB	Airflow	ID WB	59	63	67	71	59	63	67	71	59	63	67	71	59	63	67	71	59	63	67	71	59	63	67	71
80	1500	Capacity	58,488	59,307	61,039	63,685	57,969	58,788	60,520	63,166	56,454	57,274	59,006	61,652	53,849	54,668	56,401	59,047	50,665	51,484	53,217	55,863	47,758	48,577	50,310	52,956
		S/T	0.84	0.77	0.64	0.50	1.00	0.78	0.65	0.51	1.00	0.80	0.67	0.53	1.00	0.82	0.69	0.55	1.00	1.00	0.71	0.57	1.00	1.00	0.76	0.62
		Evap dT	29.08	27.15	23.55	19.82	29.03	27.10	23.50	19.77	29.30	27.37	23.77	20.04	29.01	27.08	23.48	19.75	28.75	26.82	23.22	19.49	29.96	28.03	24.43	20.70
		Pr Suc	120	122	125	130	128	129	132	137	134	135	138	143	139	141	144	149	145	146	149	154	151	153	156	161
		Pr Dis	257	258	260	264	297	298	300	305	340	341	342	347	385	386	388	392	434	435	437	442	487	488	489	494
		TotalPower	3,520	3,516	3,509	3,542	3,950	3,947	3,939	3,972	4,431	4,427	4,420	4,453	4,951	4,947	4,940	4,973	5,532	5,528	5,521	5,554	6,214	6,210	6,203	6,236
	1660	Capacity	59,087	59,906	61,638	64,285	58,568	59,387	61,119	63,765	57,054	57,873	59,605	62,251	54,448	55,267	**57,000**	59,646	51,264	52,083	53,816	56,462	48,357	49,176	50,909	53,555
		S/T	0.89	0.81	0.68	0.54	1.00	0.82	0.69	0.55	1.00	0.84	0.71	0.57	1.00	0.86	**0.73**	0.59	1.00	1.00	0.75	0.61	1.00	1.00	0.80	0.66
		Evap dT	28.20	26.28	22.67	18.94	28.15	26.22	22.62	18.89	28.42	26.49	22.89	19.16	28.13	26.20	**22.60**	18.87	27.87	25.95	22.34	18.61	29.08	27.15	23.55	19.82
		Pr Suc	122	123	126	131	129	130	133	139	135	137	140	145	141	142	**145**	150	146	147	150	156	153	154	157	162
		Pr Dis	259	260	261	266	299	300	302	306	341	342	344	349	387	388	**390**	394	436	437	439	443	488	489	491	496
		TotalPower	3,536	3,533	3,526	3,559	3,967	3,964	3,956	3,989	4,448	4,444	4,437	4,470	4,968	4,964	**4,957**	4,990	5,549	5,545	5,538	5,571	6,230	6,227	6,220	6,253
	2250	Capacity	62,192	63,011	64,743	67,389	61,672	62,492	64,224	66,870	60,158	60,977	62,710	65,356	57,553	58,372	60,104	62,750	54,369	55,188	56,920	59,566	51,462	52,281	54,013	56,660
		S/T	1.00	0.85	0.72	0.58	1.00	0.85	0.72	0.59	1.00	0.88	0.75	0.61	1.00	1.00	0.77	0.63	1.00	1.00	0.79	0.65	1.00	1.00	0.84	0.70
		Evap dT	25.67	23.74	20.14	16.41	25.62	23.69	20.09	16.36	25.89	23.96	20.36	16.63	25.60	23.67	20.07	16.34	25.34	23.41	19.81	16.08	26.55	24.62	21.02	17.29
		Pr Suc	128	129	132	138	135	137	140	145	142	143	146	151	147	148	151	157	152	154	157	162	159	160	163	168
		Pr Dis	265	266	268	272	305	306	308	313	347	349	350	355	393	394	396	400	442	443	445	449	494	495	497	502
		TotalPower	3,585	3,581	3,574	3,607	4,015	4,012	4,004	4,037	4,496	4,492	4,485	4,518	5,016	5,012	5,005	5,038	5,597	5,593	5,586	5,619	6,278	6,275	6,268	6,301
85	1500	Capacity	59,465	60,284	62,016	64,663	58,946	59,765	61,497	64,143	57,432	58,251	59,983	62,629	54,826	55,645	57,378	60,024	51,642	52,461	54,194	56,840	48,735	49,555	51,287	53,933
		S/T	1.00	0.87	0.74	0.60	1.00	0.87	0.74	0.61	1.00	1.00	0.77	0.63	1.00	1.00	0.79	0.65	1.00	1.00	0.81	0.67	1.00	1.00	0.86	0.72
		Evap dT	32.87	30.94	27.34	23.61	32.82	30.89	27.29	23.55	33.09	31.16	27.56	23.82	32.80	30.87	27.27	23.53	32.54	30.61	27.01	23.28	33.75	31.82	28.22	24.48
		Pr Suc	122	124	127	132	129	131	134	139	136	137	140	145	141	143	146	151	146	148	151	156	153	154	157	163
		Pr Dis	258	259	261	265	298	300	301	306	341	342	344	348	386	387	389	394	435	436	438	443	488	489	491	495
		TotalPower	3,528	3,525	3,517	3,550	3,958	3,955	3,948	3,981	4,439	4,436	4,428	4,461	4,959	4,956	4,948	4,981	5,540	5,537	5,529	5,562	6,222	6,218	6,211	6,244
	1660	Capacity	60,064	60,883	62,616	65,262	59,545	60,364	62,096	64,743	58,031	58,850	60,582	63,228	55,425	56,244	57,977	60,623	52,241	53,060	54,793	57,439	49,335	50,154	51,886	54,532
		S/T	1.00	0.91	0.78	0.64	1.00	0.92	0.78	0.65	1.00	1.00	0.81	0.67	1.00	1.00	0.83	0.69	1.00	1.00	0.85	0.71	1.000	1.000	1.000	0.761
		Evap dT	31.99	30.06	26.46	22.73	31.94	30.01	26.41	22.68	32.21	30.28	26.68	22.95	31.92	29.99	26.39	22.66	31.66	29.73	26.13	22.40	32.87	30.94	27.34	23.61
		Pr Suc	123	125	128	133	131	132	135	140	137	139	142	147	142	144	147	152	148	149	152	157	154	156	159	164
		Pr Dis	260	261	263	267	300	301	303	308	342	344	345	350	388	389	391	395	437	438	440	444	489	490	492	497
		TotalPower	3,545	3,541	3,534	3,567	3,975	3,972	3,964	3,997	4,456	4,452	4,445	4,478	4,976	4,972	4,965	4,998	5,557	5,553	5,546	5,579	6,239	6,235	6,228	6,261
	2250	Capacity	63,169	63,988	65,720	68,366	62,650	63,469	65,201	67,847	61,135	61,954	63,687	66,333	58,530	59,349	61,081	63,728	55,346	56,165	57,897	60,544	52,439	53,258	54,991	57,637
		S/T	1.00	0.95	0.82	0.68	1.00	1.00	0.82	0.68	1.00	1.00	0.85	0.71	1.00	1.00	0.86	0.73	1.00	1.00	1.00	0.75	1.00	1.00	1.00	0.80
		Evap dT	29.46	27.53	23.93	20.19	29.40	27.48	23.87	20.14	29.68	27.75	24.14	20.41	29.38	27.46	23.85	20.12	29.13	27.20	23.60	19.86	30.33	28.41	24.80	21.07
		Pr Suc	130	131	134	139	137	138	141	147	143	145	148	153	149	150	153	158	154	155	159	164	161	162	165	170
		Pr Dis	266	267	269	273	306	307	309	314	349	350	352	356	394	395	397	401	443	444	446	451	496	497	498	503
		TotalPower	3,593	3,590	3,582	3,615	4,023	4,020	4,013	4,046	4,504	4,501	4,493	4,526	5,024	5,021	5,013	5,046	5,605	5,602	5,594	5,627	6,287	6,283	6,276	6,309

IDB: Entering Indoor Dry Bulb Temperature Shaded area reflects AHRI (TVA) conditions **kW = Total system power**

High and low pressures are measured at the liquid and suction access fittings. **Amps: Unit amps (comp.+ evaporator + condenser fan motors)**

Design Subcooling, 16 - 19 °F @ the liquid access fitting connection ARI 95 test conditions. Design Superheat 8 - 12°F @ the compressor suction access fitting connection.

			Outdoor Ambient Temperature																							
			65				75				85				95				105				115			
			Entering Indoor Wet Bulb Temperature																							
IDB	Airflow	ID WB	59	63	67	71	59	63	67	71	59	63	67	71	59	63	67	71	59	63	67	71	59	63	67	71
70	1500	Capacity	58,154	58,973	60,705	–	57,635	58,454	60,186	–	56,120	56,939	58,672	–	53,515	54,334	56,066	–	50,331	51,150	52,882	–	47,424	48,243	49,976	–
		S/T	0.60	0.53	0.39	–	0.60	0.53	0.40	–	0.63	0.56	0.42	–	0.65	0.57	0.44	–	1.00	0.60	0.46	–	1.00	0.64	0.51	–
		Evap dT	20.57	18.64	15.04	–	20.52	18.59	14.99	–	20.79	18.86	15.26	–	20.50	18.57	14.97	–	20.24	18.31	14.71	–	21.45	19.52	15.92	–
		Pr Suc	120	121	124	–	127	128	131	–	133	135	138	–	139	140	143	–	144	145	149	–	151	152	155	–
		Pr Dis	256	257	259	–	297	298	299	–	339	340	342	–	384	385	387	–	433	435	436	–	486	487	489	–
		TotalPower	3,520	3,517	3,509	–	3,951	3,947	3,940	–	4,431	4,428	4,421	–	4,951	4,948	4,941	–	5,532	5,529	5,522	–	6,214	6,211	6,203	–
	1660	Capacity	58,753	59,572	61,304	–	58,234	59,053	60,785	–	56,719	57,538	59,271	–	54,114	54,933	56,665	–	50,930	51,749	53,481	–	48,023	48,842	50,575	–
		S/T	0.64	0.57	0.44	–	0.65	0.57	0.44	–	0.67	0.60	0.47	–	0.69	0.62	0.49	–	1.00	0.64	0.51	–	1.00	0.69	0.56	–
		Evap dT	19.69	17.76	14.16	–	19.64	17.71	14.11	–	19.91	17.98	14.38	–	19.62	17.69	14.09	–	19.36	17.43	13.83	–	20.57	18.64	15.04	–
		Pr Suc	121	123	126	–	128	130	133	–	135	136	139	–	140	142	145	–	145	147	150	–	152	153	156	–
		Pr Dis	258	259	261	–	298	299	301	–	341	342	343	–	386	387	389	–	435	436	438	–	487	489	490	–
		TotalPower	3,537	3,534	3,526	–	3,968	3,964	3,957	–	4,448	4,445	4,437	–	4,968	4,965	4,957	–	5,549	5,546	5,538	–	6,231	6,227	6,220	–
	2250	Capacity	61,857	62,676	64,409	–	61,338	62,157	63,890	–	59,824	60,643	62,375	–	57,219	58,038	59,770	–	54,035	54,854	56,586	–	51,128	51,947	53,679	–
		S/T	0.68	0.60	0.47	–	0.68	0.61	0.48	–	0.71	0.63	0.50	–	1.00	0.65	0.52	–	1.00	0.67	0.54	–	1.00	0.72	0.59	–
		Evap dT	17.16	15.23	11.63	–	17.11	15.18	11.58	–	17.38	15.45	11.85	–	17.09	15.16	11.56	–	16.83	14.90	11.30	–	18.04	16.11	12.51	–
		Pr Suc	127	129	132	–	135	136	139	–	141	142	146	–	146	148	151	–	152	153	156	–	158	160	163	–
		Pr Dis	264	265	267	–	304	306	307	–	347	348	350	–	392	393	395	–	441	442	444	–	494	495	497	–
		TotalPower	3,585	3,582	3,574	–	4,016	4,012	4,005	–	4,496	4,493	4,486	–	5,016	5,013	5,006	–	5,597	5,594	5,587	–	6,279	6,276	6,268	–
75	1500	Capacity	58,187	59,007	60,739	63,385	57,668	58,487	60,220	62,866	56,154	56,973	58,705	61,352	53,549	54,368	56,100	58,746	50,365	51,184	52,916	55,562	47,458	48,277	50,009	52,655
		S/T	0.72	0.65	0.52	0.38	0.73	0.66	0.52	0.39	1.00	0.68	0.55	0.41	1.00	0.70	0.57	0.43	1.00	0.72	0.59	0.45	1.00	0.77	0.64	0.50
		Evap dT	24.81	22.88	19.28	15.55	24.76	22.83	19.23	15.50	25.03	23.10	19.50	15.77	24.74	22.81	19.21	15.48	24.48	22.55	18.95	15.22	25.69	23.76	20.16	16.43
		Pr Suc	120	121	124	129	127	128	132	137	133	135	138	143	139	140	143	148	144	146	149	154	151	152	155	160
		Pr Dis	256	258	259	264	297	298	300	304	339	340	342	346	385	386	388	392	434	435	437	441	486	487	489	493
		TotalPower	3,517	3,514	3,507	3,540	3,948	3,945	3,937	3,970	4,428	4,425	4,418	4,451	4,949	4,945	4,938	4,971	5,530	5,526	5,519	5,552	6,211	6,208	6,201	6,233
	1660	Capacity	58,787	59,606	61,338	63,984	58,267	59,087	60,819	63,465	56,753	57,572	59,305	61,951	54,148	**54,967**	56,699	59,345	50,964	51,783	53,515	56,161	48,057	48,876	50,608	53,255
		S/T	0.76	0.69	0.56	0.42	0.77	0.70	0.57	0.43	1.00	0.72	0.59	0.45	1.00	**0.74**	0.61	0.47	1.00	0.76	0.63	0.49	1.00	0.81	0.68	0.54
		Evap dT	23.93	22.01	18.40	14.67	23.88	21.95	18.35	14.62	24.15	22.22	18.62	14.89	23.86	**21.93**	18.33	14.60	23.60	21.67	18.07	14.34	24.81	22.88	19.28	15.55
		Pr Suc	121	123	126	131	128	130	133	138	135	136	139	144	140	**142**	145	150	145	147	150	155	152	153	157	162
		Pr Dis	258	259	261	265	298	300	301	306	341	342	344	348	386	**387**	389	394	435	436	438	443	488	489	491	495
		TotalPower	3,534	3,531	3,523	3,556	3,965	3,961	3,954	3,987	4,445	4,442	4,435	4,467	4,965	**4,962**	4,955	4,988	5,546	5,543	5,536	5,569	6,228	6,225	6,217	6,250
	2250	Capacity	61,891	62,710	64,443	67,089	61,372	62,191	63,923	66,570	59,858	60,677	62,409	65,055	57,252	58,072	59,804	62,450	54,068	54,887	56,620	59,266	51,162	51,981	53,713	56,359
		S/T	0.80	0.73	0.60	0.46	1.00	0.73	0.60	0.47	1.00	0.76	0.63	0.49	1.00	0.78	0.65	0.51	1.00	0.80	0.67	0.53	1.00	1.00	0.72	0.58
		Evap dT	21.40	19.47	15.87	12.14	21.35	19.42	15.82	12.08	21.62	19.69	16.09	12.36	21.33	19.40	15.80	12.07	21.07	19.14	15.54	11.81	22.28	20.35	16.75	13.02
		Pr Suc	127	129	132	137	135	136	139	144	141	142	146	151	146	148	151	156	152	153	156	161	158	160	163	168
		Pr Dis	264	265	267	272	305	306	308	312	347	348	350	354	392	394	395	400	442	443	444	449	494	495	497	501
		TotalPower	3,582	3,579	3,572	3,605	4,013	4,010	4,002	4,035	4,493	4,490	4,483	4,516	5,013	5,010	5,003	5,036	5,595	5,591	5,584	5,617	6,276	6,273	6,265	6,298

IDB: Entering Indoor Dry Bulb Temperature

Shaded area reflects ACCA (TVA) conditions

kW = Total system power

High and low pressures are measured at the liquid and suction access fittings.

Amps: Unit amps (comp.+ evaporator + condenser fan motors)

Design Subcooling, 16 - 19 °F @ the liquid access fitting connection ARI 95 test conditions. Design Superheat 8 - 12°F @ the compressor suction access fitting connection.

			Outdoor Ambient Temperature																							
			65				75				85				95				105				115			
			Entering Indoor Wet Bulb Temperature																							
IDB	Airflow	ID WB	59	63	67	71	59	63	67	71	59	63	67	71	59	63	67	71	59	63	67	71	59	63	67	71
80	1500	Capacity	58,488	59,307	61,039	63,685	57,969	58,788	60,520	63,166	56,454	57,274	59,006	61,652	53,849	54,668	56,401	59,047	50,665	51,484	53,217	55,863	47,758	48,577	50,310	52,956
		S/T	0.84	0.77	0.64	0.50	1.00	0.78	0.65	0.51	1.00	0.80	0.67	0.53	1.00	0.82	0.69	0.55	1.00	1.00	0.71	0.57	1.00	1.00	0.76	0.62
		Evap dT	29.08	27.15	23.55	19.82	29.03	27.10	23.50	19.77	29.30	27.37	23.77	20.04	29.01	27.08	23.48	19.75	28.75	26.82	23.22	19.49	29.96	28.03	24.43	20.70
		Pr Suc	120	122	125	130	128	129	132	137	134	135	138	143	139	141	144	149	145	146	149	154	151	153	156	161
		Pr Dis	257	258	260	264	297	298	300	305	340	341	342	347	385	386	388	392	434	435	437	442	487	488	489	494
		TotalPower	3,520	3,516	3,509	3,542	3,950	3,947	3,939	3,972	4,431	4,427	4,420	4,453	4,951	4,947	4,940	4,973	5,532	5,528	5,521	5,554	6,214	6,210	6,203	6,236
	1660	Capacity	59,087	59,906	61,638	64,285	58,568	59,387	61,119	63,765	57,054	57,873	59,605	62,251	54,448	55,267	**57,000**	59,646	51,264	52,083	53,816	56,462	48,357	49,176	50,909	53,555
		S/T	0.89	0.81	0.68	0.54	1.00	0.82	0.69	0.55	1.00	0.84	0.71	0.57	1.00	0.86	**0.73**	0.59	1.00	1.00	0.75	0.61	1.00	1.00	0.80	0.66
		Evap dT	28.20	26.28	22.67	18.94	28.15	26.22	22.62	18.89	28.42	26.49	22.89	19.16	28.13	26.20	**22.60**	18.87	27.87	25.95	22.34	18.61	29.08	27.15	23.55	19.82
		Pr Suc	122	123	126	131	129	130	133	139	135	137	140	145	141	142	**145**	150	146	147	150	156	153	154	157	162
		Pr Dis	259	260	261	266	299	300	302	306	341	342	344	349	387	388	**390**	394	436	437	439	443	488	489	491	496
		TotalPower	3,536	3,533	3,526	3,559	3,967	3,964	3,956	3,989	4,448	4,444	4,437	4,470	4,968	4,964	**4,957**	4,990	5,549	5,545	5,538	5,571	6,230	6,227	6,220	6,253
	2250	Capacity	62,192	63,011	64,743	67,389	61,672	62,492	64,224	66,870	60,158	60,977	62,710	65,356	57,553	58,372	60,104	62,750	54,369	55,188	56,920	59,566	51,462	52,281	54,013	56,660
		S/T	1.00	0.85	0.72	0.58	1.00	0.85	0.72	0.59	1.00	0.88	0.75	0.61	1.00	1.00	0.77	0.63	1.00	1.00	0.79	0.65	1.00	1.00	0.84	0.70
		Evap dT	25.67	23.74	20.14	16.41	25.62	23.69	20.09	16.36	25.89	23.96	20.36	16.63	25.60	23.67	20.07	16.34	25.34	23.41	19.81	16.08	26.55	24.62	21.02	17.29
		Pr Suc	128	129	132	138	135	137	140	145	142	143	146	151	147	148	151	157	152	154	157	162	159	160	163	168
		Pr Dis	265	266	268	272	305	306	308	313	347	349	350	355	393	394	396	400	442	443	445	449	494	495	497	502
		TotalPower	3,585	3,581	3,574	3,607	4,015	4,012	4,004	4,037	4,496	4,492	4,485	4,518	5,016	5,012	5,005	5,038	5,597	5,593	5,586	5,619	6,278	6,275	6,268	6,301
85	1500	Capacity	59,465	60,284	62,016	64,663	58,946	59,765	61,497	64,143	57,432	58,251	59,983	62,629	54,826	55,645	57,378	60,024	51,642	52,461	54,194	56,840	48,735	49,555	51,287	53,933
		S/T	1.00	0.87	0.74	0.60	1.00	0.87	0.74	0.61	1.00	1.00	0.77	0.63	1.00	1.00	0.79	0.65	1.00	1.00	0.81	0.67	1.00	1.00	0.86	0.72
		Evap dT	32.87	30.94	27.34	23.61	32.82	30.89	27.29	23.55	33.09	31.16	27.56	23.82	32.80	30.87	27.27	23.53	32.54	30.61	27.01	23.28	33.75	31.82	28.22	24.48
		Pr Suc	122	124	127	132	129	131	134	139	136	137	140	145	141	143	146	151	146	148	151	156	153	154	157	163
		Pr Dis	258	259	261	265	298	300	301	306	341	342	344	348	386	387	389	394	435	436	438	443	488	489	491	495
		TotalPower	3,528	3,525	3,517	3,550	3,958	3,955	3,948	3,981	4,439	4,436	4,428	4,461	4,959	4,956	4,948	4,981	5,540	5,537	5,529	5,562	6,222	6,218	6,211	6,244
	1660	Capacity	60,064	60,883	62,616	65,262	59,545	60,364	62,096	64,743	58,031	58,850	60,582	63,228	55,425	56,244	57,977	60,623	52,241	53,060	54,793	57,439	49,335	50,154	51,886	54,532
		S/T	1.00	0.91	0.78	0.64	1.00	0.92	0.78	0.65	1.00	1.00	0.81	0.67	1.00	1.00	0.83	0.69	1.00	1.00	0.85	0.71	1.000	1.000	1.000	0.761
		Evap dT	31.99	30.06	26.46	22.73	31.94	30.01	26.41	22.68	32.21	30.28	26.68	22.95	31.92	29.99	26.39	22.66	31.66	29.73	26.13	22.40	32.87	30.94	27.34	23.61
		Pr Suc	123	125	128	133	131	132	135	140	137	139	142	147	142	144	147	152	148	149	152	157	154	156	159	164
		Pr Dis	260	261	263	267	300	301	303	308	342	344	345	350	388	389	391	395	437	438	440	444	489	490	492	497
		TotalPower	3,545	3,541	3,534	3,567	3,975	3,972	3,964	3,997	4,456	4,452	4,445	4,478	4,976	4,972	4,965	4,998	5,557	5,553	5,546	5,579	6,239	6,235	6,228	6,261
	2250	Capacity	63,169	63,988	65,720	68,366	62,650	63,469	65,201	67,847	61,135	61,954	63,687	66,333	58,530	59,349	61,081	63,728	55,346	56,165	57,897	60,544	52,439	53,258	54,991	57,637
		S/T	1.00	0.95	0.82	0.68	1.00	1.00	0.82	0.68	1.00	1.00	0.85	0.71	1.00	1.00	0.86	0.73	1.00	1.00	1.00	0.75	1.00	1.00	1.00	0.80
		Evap dT	29.46	27.53	23.93	20.19	29.40	27.48	23.87	20.14	29.68	27.75	24.14	20.41	29.38	27.46	23.85	20.12	29.13	27.20	23.60	19.86	30.33	28.41	24.80	21.07
		Pr Suc	130	131	134	139	137	138	141	147	143	145	148	153	149	150	153	158	154	155	159	164	161	162	165	170
		Pr Dis	266	267	269	273	306	307	309	314	349	350	352	356	394	395	397	401	443	444	446	451	496	497	498	503
		TotalPower	3,593	3,590	3,582	3,615	4,023	4,020	4,013	4,046	4,504	4,501	4,493	4,526	5,024	5,021	5,013	5,046	5,605	5,602	5,594	5,627	6,287	6,283	6,276	6,309

IDB: Entering Indoor Dry Bulb Temperature Shaded area reflects AHRI (TVA) conditions **kW = Total system power**

High and low pressures are measured at the liquid and suction access fittings. **Amps: Unit amps (comp.+ evaporator + condenser fan motors)**

Design Subcooling, 16 - 19 °F @ the liquid access fitting connection ARI 95 test conditions. Design Superheat 8 - 12°F @ the compressor suction access fitting connection.

Heating

Heating Rating Table - Natural Gas and Propane

Unit	Gas Heat	Stage 1 Input/Output (MBH)	Stage 2 Input/Output (MBH)	Temp Rise High (°F)	Temp Rise Low (°F)	Thermal Efficiency (%)
DBG036	Low	45 / 36.5	33.8 / 27.3	15 - 45	10 - 40	81%
	High	90 / 72.9	67.5 / 54.7	45 - 75	40 - 70	81%
DBG048	Low	90 / 72.9	67.5 / 54.7	30 - 60	25 - 55	81%
	High	115 / 93.2	86.3 / 69.9	45 - 75	40 - 70	81%
DBG060	Low	90 / 72.9	67.5 / 54.7	20 - 50	15 - 45	81%
	High	140 / 113.4	105 / 85.1	45 - 75	40 - 70	81%

Heat Exchanger and Burner Orifice Specifications

Unit	High Fire Rate Btu/Hr	Number of Burners	NG Orifice	LP Orifice
DBG036	45,000	2	43	55
	90,000	5	45	56
DBG048	90,000	4	43	55
	115,000	5	43	55
DBG060	90,000	4	43	55
	140,000	6	43	55

Min-Max Airflow Range

Unit	High Fire Rate Btu/Hr	Heating Minimum Scfm	Cooling Minimum Scfm	Maximum Scfm
DBG036	45,000	750	900	1350
	90,000	900		
DBG048	90,000	1125	1200	1800
	115,000	1150		
DBG060	90,000	1350	1500	2250
	140,000	1400		

3 Ton GE - 045 - Horizontal

SPEED TAP	EXTERNAL STATIC PRESSURE (ESP) IN W. C.	STANDARD CFM	AMPS	BHP	RPM
T1	0.1	1052	0.87	0.17	560
	0.2	914	0.82	0.16	587
	0.3	845	0.86	0.17	629
	0.4	774	0.92	0.18	675
	0.5	717	0.97	0.19	714
	0.6	639	1.02	0.20	759
	0.7	574	1.05	0.21	797
	0.8	507	1.09	0.22	839
T2	0.1	1298	1.35	0.27	646
	0.2	1242	1.41	0.29	681
	0.3	1191	1.46	0.30	715
	0.4	1122	1.53	0.31	756
	0.5	1061	1.59	0.33	792
	0.6	1003	1.64	0.34	828
	0.7	956	1.69	0.35	861
	0.8	907	1.75	0.36	893
T3	0.1	1261	1.27	0.26	633
	0.2	1205	1.33	0.27	669
	0.3	1154	1.38	0.28	705
	0.4	1083	1.45	0.30	745
	0.5	1019	1.50	0.31	784
	0.6	965	1.55	0.32	818
	0.7	917	1.61	0.33	852
	0.8	860	1.67	0.34	888
T4	0.1	1611	2.26	0.48	756
	0.2	1557	2.33	0.49	787
	0.3	1509	2.36	0.51	818
	0.4	1466	2.44	0.53	848
	0.5	1420	2.50	0.54	880
	0.6	1363	2.59	0.56	912
	0.7	1315	2.62	0.57	942
	0.8	1266	2.69	0.59	971
T5	0.1	1388	1.59	0.33	679
	0.2	1335	1.65	0.34	714
	0.3	1288	1.71	0.35	747
	0.4	1230	1.77	0.37	785
	0.5	1167	1.83	0.38	821
	0.6	1112	1.89	0.40	856
	0.7	1059	1.95	0.41	887
	0.8	1017	2.00	0.42	916

Speed Tap T1 for fan only applications

3 ton GE - 045 - Downshot

SPEED TAP	EXTERNAL STATIC PRESSURE (ESP) IN W. C.	STANDARD CFM	AMPS	BHP	RPM
T1	0.1	1085	0.90	0.17	560
	0.2	931	0.81	0.16	576
	0.3	838	0.87	0.17	627
	0.4	765	0.92	0.18	671
	0.5	698	0.97	0.19	716
	0.6	615	1.02	0.20	763
	0.7	551	1.06	0.21	798
	0.8	481	1.11	0.22	841
T2	0.1	1314	1.32	0.27	635
	0.2	1253	1.39	0.28	670
	0.3	1200	1.45	0.29	704
	0.4	1137	1.51	0.31	743
	0.5	1061	1.57	0.32	786
	0.6	1000	1.63	0.34	821
	0.7	947	1.69	0.35	855
	0.8	893	1.75	0.36	891
T3	0.1	1278	1.25	0.25	624
	0.2	1218	1.30	0.27	660
	0.3	1167	1.35	0.28	692
	0.4	1096	1.42	0.29	734
	0.5	1021	1.49	0.31	775
	0.6	957	1.54	0.32	814
	0.7	910	1.59	0.33	846
	0.8	844	1.66	0.34	886
T4	0.1	1634	2.20	0.47	741
	0.2	1580	2.26	0.48	771
	0.3	1529	2.33	0.50	803
	0.4	1482	2.41	0.52	835
	0.5	1436	2.47	0.53	864
	0.6	1386	2.54	0.55	894
	0.7	1322	2.62	0.57	928
	0.8	1269	2.68	0.58	959
T5	0.1	1407	1.58	0.32	669
	0.2	1350	1.64	0.34	703
	0.3	1302	1.70	0.35	735
	0.4	1248	1.77	0.36	769
	0.5	1177	1.84	0.38	810
	0.6	1113	1.90	0.39	847
	0.7	1061	1.96	0.41	878
	0.8	1010	2.02	0.42	909

3 ton GE - 090 - Horizontal

SPEED TAP	EXTERNAL STATIC PRESSURE (ESP) IN W. C.	STANDARD CFM	AMPS	BHP	RPM
T1	0.1	1103	0.88	0.17	559
	0.2	864	0.71	0.14	567
	0.3	784	0.76	0.15	615
	0.4	723	0.81	0.16	658
	0.5	627	0.86	0.17	713
	0.6	581	0.90	0.18	747
	0.7	510	0.95	0.19	793
	0.8	450	0.99	0.20	830
T2	0.1	1339	1.34	0.27	636
	0.2	1277	1.40	0.29	676
	0.3	1215	1.47	0.30	716
	0.4	1146	1.53	0.31	756
	0.5	1077	1.60	0.33	797
	0.6	1027	1.65	0.34	829
	0.7	980	1.70	0.35	860
	0.8	934	1.75	0.36	892
T3	0.1	1226	1.11	0.22	599
	0.2	1168	1.17	0.23	642
	0.3	1088	1.25	0.25	688
	0.4	1016	1.30	0.26	730
	0.5	956	1.36	0.27	767
	0.6	905	1.41	0.28	802
	0.7	854	1.45	0.29	837
	0.8	773	1.51	0.31	882
T4	0.1	1658	2.20	0.47	739
	0.2	1604	2.27	0.49	775
	0.3	1557	2.35	0.50	808
	0.4	1509	2.43	0.52	842
	0.5	1447	2.51	0.54	881
	0.6	1397	2.57	0.56	909
	0.7	1344	2.65	0.58	941
	0.8	1295	2.73	0.59	973
T5	0.1	1434	1.58	0.32	669
	0.2	1378	1.65	0.34	703
	0.3	1328	1.70	0.35	739
	0.4	1254	1.78	0.37	785
	0.5	1192	1.85	0.39	822
	0.6	1136	1.92	0.40	858
	0.7	1089	1.97	0.41	887
	0.8	1044	2.02	0.43	916

Speed Tap T1 for fan only applications

3 ton GE - 090 - Downshot

SPEED TAP	EXTERNAL STATIC PRESSURE (ESP) IN W. C.	STANDARD CFM	AMPS	BHP	RPM
T1	0.1	1080	0.88	0.17	560
	0.2	867	0.72	0.14	560
	0.3	760	0.77	0.15	609
	0.4	699	0.81	0.16	655
	0.5	605	0.86	0.17	707
	0.6	542	0.91	0.18	749
	0.7	472	0.95	0.18	790
	0.8	488	0.97	0.19	811
T2	0.1	1308	1.35	0.27	639
	0.2	1247	1.41	0.28	676
	0.3	1195	1.46	0.30	707
	0.4	1124	1.53	0.31	748
	0.5	1039	1.60	0.32	790
	0.6	983	1.65	0.34	825
	0.7	942	1.71	0.35	858
	0.8	893	1.76	0.36	894
T3	0.1	1199	1.12	0.22	604
	0.2	1134	1.18	0.23	643
	0.3	1078	1.23	0.24	678
	0.4	984	1.30	0.26	724
	0.5	914	1.36	0.27	763
	0.6	872	1.41	0.28	798
	0.7	808	1.46	0.29	841
	0.8	734	1.51	0.31	882
T4	0.1	1634	2.22	0.47	747
	0.2	1578	2.29	0.49	778
	0.3	1526	2.37	0.51	808
	0.4	1474	2.42	0.52	839
	0.5	1423	2.49	0.54	867
	0.6	1371	2.54	0.55	896
	0.7	1299	2.63	0.57	932
	0.8	1251	2.70	0.59	963
T5	0.1	1405	1.57	0.32	670
	0.2	1344	1.64	0.34	706
	0.3	1292	1.70	0.35	738
	0.4	1235	1.77	0.36	773
	0.5	1162	1.83	0.38	812
	0.6	1096	1.90	0.39	846
	0.7	1044	1.96	0.41	882
	0.8	1006	2.01	0.42	913

4 ton GE - 090 - Horizontal

SPEED TAP	EXTERNAL STATIC PRESSURE (ESP) IN W. C.	STANDARD CFM	AMPS	BHP	RPM
T1	0.1	1329	1.32	0.26	643
	0.2	1275	1.38	0.28	681
	0.3	1219	1.45	0.29	716
	0.4	1161	1.51	0.31	758
	0.5	1082	1.59	0.32	806
	0.6	1025	1.65	0.34	840
	0.7	968	1.70	0.35	871
	0.8	911	1.74	0.36	903
T2	0.1	1678	2.27	0.49	765
	0.2	1632	2.33	0.50	796
	0.3	1587	2.39	0.51	826
	0.4	1544	2.46	0.53	858
	0.5	1495	2.53	0.55	887
	0.6	1451	2.60	0.56	918
	0.7	1400	2.68	0.58	953
	0.8	1334	2.77	0.60	993
T3	0.1	1614	2.08	1.00	329
	0.2	1570	2.15	1.04	341
	0.3	1524	2.20	1.08	351
	0.4	1475	2.29	1.13	364
	0.5	1425	2.36	1.17	377
	0.6	1380	2.41	1.21	386
	0.7	1322	2.49	1.26	400
	0.8	1260	2.57	1.31	413
T4	0.1	2010	3.56	0.80	891
	0.2	1967	3.62	0.82	914
	0.3	1927	3.70	0.84	941
	0.4	1889	3.77	0.86	966
	0.5	1849	3.85	0.88	992
	0.6	1812	3.92	0.89	1017
	0.7	1777	4.00	0.91	1041
	0.8	1741	4.08	0.93	1066
T5	0.1	1797	2.68	0.58	811
	0.2	1754	2.75	0.60	842
	0.3	1715	2.82	0.62	867
	0.4	1671	2.89	0.63	893
	0.5	1625	2.96	0.65	924
	0.6	1583	3.04	0.67	953
	0.7	1541	3.10	0.69	981
	0.8	1496	3.18	0.70	1013

Speed Tap T1 for fan only applications

4 ton GE - 090 - Downshot

SPEED TAP	EXTERNAL STATIC PRESSURE (ESP) IN W. C.	STANDARD CFM	AMPS	BHP	RPM
T1	0.1	1304	1.32	0.26	647
	0.2	1246	1.38	0.28	682
	0.3	1188	1.44	0.29	720
	0.4	1131	1.50	0.30	756
	0.5	1070	1.56	0.32	796
	0.6	994	1.64	0.34	838
	0.7	932	1.69	0.35	871
	0.8	870	1.74	0.36	906
T2	0.1	1653	2.27	0.49	770
	0.2	1602	2.33	0.50	803
	0.3	1553	2.39	0.52	832
	0.4	1503	2.47	0.53	863
	0.5	1456	2.52	0.55	892
	0.6	1412	2.58	0.56	920
	0.7	1366	2.64	0.58	950
	0.8	1316	2.71	0.59	980
T3	0.1	1600	2.06	0.44	748
	0.2	1545	2.13	0.45	776
	0.3	1496	2.18	0.47	807
	0.4	1444	2.25	0.48	840
	0.5	1393	2.32	0.50	873
	0.6	1347	2.38	0.51	902
	0.7	1303	2.44	0.53	930
	0.8	1251	2.51	0.54	964
T4	0.1	1981	3.54	0.80	890
	0.2	1937	3.62	0.82	915
	0.3	1897	3.70	0.83	939
	0.4	1854	3.78	0.85	966
	0.5	1811	3.86	0.87	990
	0.6	1774	3.89	0.89	1014
	0.7	1736	3.95	0.91	1039
	0.8	1698	4.03	0.92	1062
T5	0.1	1770	2.68	0.58	815
	0.2	1726	2.76	0.60	845
	0.3	1678	2.82	0.62	873
	0.4	1630	2.89	0.63	900
	0.5	1585	2.96	0.65	929
	0.6	1543	3.03	0.67	958
	0.7	1501	3.10	0.68	984
	0.8	1461	3.18	0.70	1011

4 ton GE - 115 - Horizontal

SPEED TAP	EXTERNAL STATIC PRESSURE (ESP) IN W. C.	STANDARD CFM	AMPS	BHP	RPM
T1	0.1	1626	2.07	0.44	740
	0.2	1578	2.12	0.45	769
	0.3	1529	2.20	0.47	803
	0.4	1482	2.28	0.48	836
	0.5	1431	2.34	0.50	870
	0.6	1381	2.42	0.52	902
	0.7	1316	2.51	0.54	944
	0.8	1260	2.58	0.56	976
T2	0.1	1685	2.26	0.48	762
	0.2	1639	2.33	0.50	792
	0.3	1594	2.40	0.51	822
	0.4	1546	2.47	0.53	854
	0.5	1496	2.55	0.55	887
	0.6	1446	2.61	0.57	919
	0.7	1397	2.69	0.58	953
	0.8	1334	2.78	0.60	991
T3	0.1	1642	2.11	0.45	745
	0.2	1592	2.18	0.46	776
	0.3	1550	2.24	0.48	807
	0.4	1499	2.32	0.50	841
	0.5	1450	2.40	0.52	876
	0.6	1401	2.46	0.53	907
	0.7	1340	2.55	0.55	948
	0.8	1280	2.62	0.57	983
T4	0.1	2091	3.83	0.87	906
	0.2	2050	3.92	0.89	931
	0.3	2013	4.00	0.91	955
	0.4	1973	4.08	0.93	980
	0.5	1935	4.15	0.95	1006
	0.6	1898	4.23	0.97	1029
	0.7	1859	4.30	0.99	1054
	0.8	1820	4.37	1.01	1079
T5	0.1	1804	2.65	1.08	429
	0.2	1759	2.71	1.12	443
	0.3	1717	2.79	1.15	456
	0.4	1673	2.87	1.20	470
	0.5	1627	2.95	1.24	484
	0.6	1583	3.03	1.28	497
	0.7	1541	3.09	1.31	510
	0.8	1496	3.17	1.36	524

Speed Tap T1 for fan only applications

4 ton GE - 115 - Downshot

SPEED TAP	EXTERNAL STATIC PRESSURE (ESP) IN W. C.	STANDARD CFM	AMPS	BHP	RPM
T1	0.1	1597	2.07	0.44	746
	0.2	1544	2.14	0.45	775
	0.3	1495	2.21	0.47	807
	0.4	1444	2.27	0.48	839
	0.5	1394	2.34	0.50	871
	0.6	1348	2.39	0.51	899
	0.7	1304	2.46	0.53	931
	0.8	1239	2.53	0.55	971
T2	0.1	1660	2.24	0.49	768
	0.2	1611	2.31	0.50	797
	0.3	1561	2.37	0.51	826
	0.4	1511	2.44	0.53	855
	0.5	1464	2.50	0.54	886
	0.6	1416	2.58	0.56	914
	0.7	1371	2.64	0.57	944
	0.8	1328	2.71	0.59	976
T3	0.1	1617	2.12	0.45	751
	0.2	1569	2.18	0.46	780
	0.3	1519	2.24	0.48	809
	0.4	1467	2.32	0.49	843
	0.5	1417	2.39	0.51	875
	0.6	1367	2.46	0.53	903
	0.7	1321	2.52	0.54	934
	0.8	1264	2.61	0.56	974
T4	0.1	2048	3.87	0.87	911
	0.2	2007	3.94	0.89	935
	0.3	1966	4.03	0.91	960
	0.4	1925	4.07	0.93	983
	0.5	1879	4.16	0.95	1010
	0.6	1842	4.23	0.96	1031
	0.7	1807	4.31	0.98	1053
	0.8	1768	4.38	1.00	1077
T5	0.1	1782	2.67	0.58	809
	0.2	1734	2.74	0.60	838
	0.3	1688	2.81	0.61	865
	0.4	1635	2.88	0.63	893
	0.5	1590	2.96	0.65	922
	0.6	1545	3.02	0.66	950
	0.7	1504	3.08	0.68	976
	0.8	1459	3.14	0.69	1002

5 ton GE - 090 - Horizontal

SPEED TAP	EXTERNAL STATIC PRESSURE (ESP) IN W. C.	STANDARD CFM	AMPS	BHP	RPM
T1	0.1	1414	1.52	0.31	673
	0.2	1363	1.58	0.33	708
	0.3	1311	1.65	0.34	742
	0.4	1258	1.72	0.36	780
	0.5	1198	1.78	0.37	820
	0.6	1124	1.86	0.39	865
	0.7	1069	1.91	0.40	896
	0.8	1018	1.96	0.41	925
T2	0.1	1889	3.06	0.68	850
	0.2	1848	3.14	0.70	876
	0.3	1822	3.19	0.71	900
	0.4	1782	3.27	0.73	926
	0.5	1739	3.35	0.75	953
	0.6	1695	3.42	0.77	981
	0.7	1655	3.50	0.79	1011
	0.8	1615	3.58	0.80	1036
T3	0.1	1721	2.39	0.52	781
	0.2	1671	2.45	0.53	813
	0.3	1630	2.51	0.55	842
	0.4	1584	2.58	0.56	871
	0.5	1537	2.67	0.58	901
	0.6	1494	2.74	0.60	930
	0.7	1446	2.82	0.62	964
	0.8	1389	2.90	0.64	1001
T4	0.1	2260	4.80	1.12	982
	0.2	2221	4.89	1.14	1004
	0.3	2180	4.97	1.16	1026
	0.4	2147	5.05	1.18	1048
	0.5	2111	5.11	1.20	1069
	0.6	2079	5.19	1.22	1091
	0.7	2044	5.28	1.24	1112
	0.8	2009	5.37	1.26	1135
T5	0.1	2066	3.88	0.88	914
	0.2	2027	3.96	0.89	939
	0.3	1993	4.04	0.91	962
	0.4	1956	4.11	0.93	987
	0.5	1917	4.20	0.95	1013
	0.6	1880	4.28	0.97	1039
	0.7	1844	4.34	0.99	1062
	0.8	1814	4.41	1.01	1083

Speed Tap T1 for fan only applications

5 ton GE - 090 - Downshot

SPEED TAP	EXTERNAL STATIC PRESSURE (ESP) IN W. C.	STANDARD CFM	AMPS	BHP	RPM
T1	0.1	1395	1.53	0.31	677
	0.2	1340	1.59	0.33	710
	0.3	1283	1.65	0.34	746
	0.4	1228	1.71	0.36	781
	0.5	1171	1.78	0.37	819
	0.6	1117	1.84	0.39	853
	0.7	1046	1.90	0.40	892
	0.8	988	1.96	0.41	923
T2	0.1	1864	3.05	0.68	849
	0.2	1820	3.12	0.69	875
	0.3	1777	3.19	0.71	902
	0.4	1748	3.27	0.73	930
	0.5	1703	3.34	0.75	957
	0.6	1659	3.42	0.77	984
	0.7	1619	3.49	0.78	1009
	0.8	1581	3.56	0.80	1033
T3	0.1	1701	2.36	0.51	782
	0.2	1653	2.42	0.53	811
	0.3	1606	2.48	0.54	839
	0.4	1554	2.57	0.56	870
	0.5	1506	2.64	0.58	898
	0.6	1461	2.71	0.59	927
	0.7	1417	2.78	0.61	956
	0.8	1370	2.84	0.62	986
T4	0.1	2232	4.80	1.12	979
	0.2	2184	4.88	1.13	1001
	0.3	2147	4.96	1.15	1023
	0.4	2110	5.03	1.17	1044
	0.5	2071	5.11	1.19	1067
	0.6	2034	5.20	1.21	1089
	0.7	2000	5.28	1.23	1109
	0.8	1965	5.35	1.25	1131
T5	0.1	2041	3.86	0.87	912
	0.2	1998	3.94	0.89	937
	0.3	1959	4.01	0.91	962
	0.4	1919	4.08	0.93	986
	0.5	1880	4.16	0.95	1010
	0.6	1840	4.23	0.97	1034
	0.7	1805	4.30	0.99	1058
	0.8	1775	4.39	1.00	1082

5 ton GE - 140 - Horizontal

SPEED TAP	EXTERNAL STATIC PRESSURE (ESP) IN W. C.	STANDARD CFM	AMPS	BHP	RPM
T1	0.1	1536	1.85	0.39	720
	0.2	1489	1.90	0.40	753
	0.3	1443	1.96	0.42	786
	0.4	1391	2.02	0.43	820
	0.5	1341	2.09	0.45	855
	0.6	1296	2.16	0.46	887
	0.7	1244	2.23	0.48	921
	0.8	1176	2.32	0.50	964
T2	0.1	1878	3.05	0.68	856
	0.2	1839	3.12	0.70	881
	0.3	1814	3.18	0.72	905
	0.4	1774	3.25	0.73	931
	0.5	1730	3.32	0.75	959
	0.6	1688	3.39	0.77	987
	0.7	1650	3.47	0.79	1014
	0.8	1611	3.55	0.81	1041
T3	0.1	2192	4.49	1.04	966
	0.2	2151	4.57	1.06	988
	0.3	2111	4.64	1.08	1009
	0.4	2077	4.72	1.10	1031
	0.5	2040	4.79	1.12	1056
	0.6	2007	4.87	1.14	1076
	0.7	1973	4.94	1.16	1100
	0.8	1938	5.02	1.18	1123
T4	0.1	2300	5.16	1.21	1005
	0.2	2262	5.21	1.22	1024
	0.3	2226	5.32	1.24	1046
	0.4	2194	5.42	1.27	1068
	0.5	2160	5.49	1.29	1091
	0.6	2127	5.58	1.31	1111
	0.7	2078	5.56	1.31	1128
	0.8	2029	5.54	1.30	1145
T5	0.1	2082	3.81	0.87	907
	0.2	2041	3.89	0.89	932
	0.3	2003	3.98	0.91	957
	0.4	1966	4.07	0.93	983
	0.5	1932	4.14	0.95	1005
	0.6	1893	4.21	0.97	1030
	0.7	1854	4.30	0.99	1055
	0.8	1817	4.37	1.01	1079

Speed Tap T1 for fan only applications

5 ton GE - 140 - Downshot

SPEED TAP	EXTERNAL STATIC PRESSURE (ESP) IN W. C.	STANDARD CFM	AMPS	BHP	RPM
T1	0.1	1521	1.84	0.39	720
	0.2	1469	1.92	0.41	753
	0.3	1417	1.98	0.42	783
	0.4	1364	2.05	0.44	817
	0.5	1314	2.11	0.45	851
	0.6	1266	2.17	0.46	882
	0.7	1199	2.25	0.48	923
	0.8	1136	2.30	0.50	957
T2	0.1	1869	3.06	0.68	848
	0.2	1825	3.12	0.69	873
	0.3	1792	3.21	0.71	902
	0.4	1746	3.29	0.73	930
	0.5	1702	3.36	0.75	956
	0.6	1661	3.42	0.77	981
	0.7	1621	3.49	0.78	1008
	0.8	1577	3.55	0.80	1035
T3	0.1	2174	4.46	1.03	954
	0.2	2134	4.54	1.05	977
	0.3	2093	4.61	1.07	1002
	0.4	2055	4.71	1.09	1025
	0.5	2020	4.79	1.11	1049
	0.6	1986	4.88	1.14	1073
	0.7	1940	4.93	1.15	1093
	0.8	1901	5.01	1.17	1115
T4	0.1	2284	5.10	1.19	996
	0.2	2244	5.19	1.22	1019
	0.3	2207	5.27	1.24	1040
	0.4	2169	5.34	1.26	1062
	0.5	2132	5.44	1.28	1084
	0.6	2097	5.53	1.30	1105
	0.7	2056	5.56	1.31	1122
	0.8	2002	5.55	1.31	1140
T5	0.1	2054	3.81	0.87	908
	0.2	2013	3.89	0.89	932
	0.3	1966	3.98	0.91	959
	0.4	1924	4.04	0.93	983
	0.5	1885	4.12	0.95	1007
	0.6	1843	4.21	0.97	1031
	0.7	1803	4.30	0.98	1056
	0.8	1767	4.35	1.00	1078

Static Pressure

3-5 TONS		
DOWNFLOW ECONOMIZER PRESSURE DROP		
Cabinet	CFM	SP in.wg.
3 Ton	900	.03"
	1200	.05"
	1500	.08"
4 Ton	1200	.06"
	1600	.10"
	2000	.14"
5 Ton	1500	.08"
	2000	.14"
	2500	.22"

3-5 TONS		
HORIZONTAL ECONOMIZER PRESSURE DROP		
Cabinet	CFM	SP in.wg.
3 Ton	900	.06"
	1200	.11"
	1500	.16"
4 Ton	1200	.11"
	1600	.19"
	2000	.29"
5 Ton	1500	.18"
	2000	.30"
	2500	.45"

Electrical Data

Model Number	Electrical Rating	Compressor			Outdoor Fan Motor			Indoor Fan Motor			Optional Powered Convenience Outlet	Optional Power Exhaust	Power Supply	
		QTY	RLA	LRA	QTY	HP	FLA	Type	HP	FLA	FLA	FLA	MCA	MOP
DBG0361D	208-230/1/60	1	16.67	79	1	0.17	0.95	Direct-Drive Standard Static	0.75	5.7	-	-	27.5/27.5	40/40
											9.6/8.7	-	37.1/36.2	50/50
											-	1.7/1.5	29.2/29.0	40/40
											9.6/8.7	1.7/1.5	38.8/37.7	50/50
DBG0363D	208-230/3/60	1	10.45	73	1	0.17	0.95	Direct-Drive Standard Static	0.75	5.7	-	-	19.7/19.7	30/30
											9.6/8.7	-	29.3/28.4	35/35
											-	1.7/1.5	21.4/21.2	30/30
											9.6/8.7	1.7/1.5	31.0/29.9	35/35
DBG0481D	208-230/1/60	1	19.87	109	1	0.25	1.4	Direct-Drive Standard Static	1	6.9	-	-	33.1/33.1	50/50
											9.6/8.7	-	42.7/41.8	60/60
											-	1.7/1.5	34.8/34.6	50/50
											9.6/8.7	1.7/1.5	44.4/43.3	60/60
DBG0483D	208-230/3/60	1	13.14	83.1	1	0.25	1.4	Direct-Drive Standard Static	1	6.9	-	-	24.7/24.7	35/35
											9.6/8.7	-	34.3/33.4	45/45
											-	1.7/1.5	26.4/26.2	35/35
											9.6/8.7	1.7/1.5	36.0/34.9	45/45
DBG0601D	208-230/1/60	1	25	134	1	0.33	2	Direct-Drive Standard Static	1	6.9	-	-	40.1/40.1	60/60
											9.6/8.7	-	49.7/48.8	70/70
											-	1.7/1.5	41.8/41.6	60/60
											9.6/8.7	1.7/1.5	51.4/50.3	70/70
DBG0603D	208-230/3/60	1	15.9	110	1	0.33	2	Direct-Drive Standard Static	1	6.9	-	-	28.8/28.8	40/40
											9.6/8.7	-	38.4/37.5	50/50
											-	1.7/1.5	30.5/30.3	40/40
											9.6/8.7	1.7/1.5	40.1/39.0	50/50

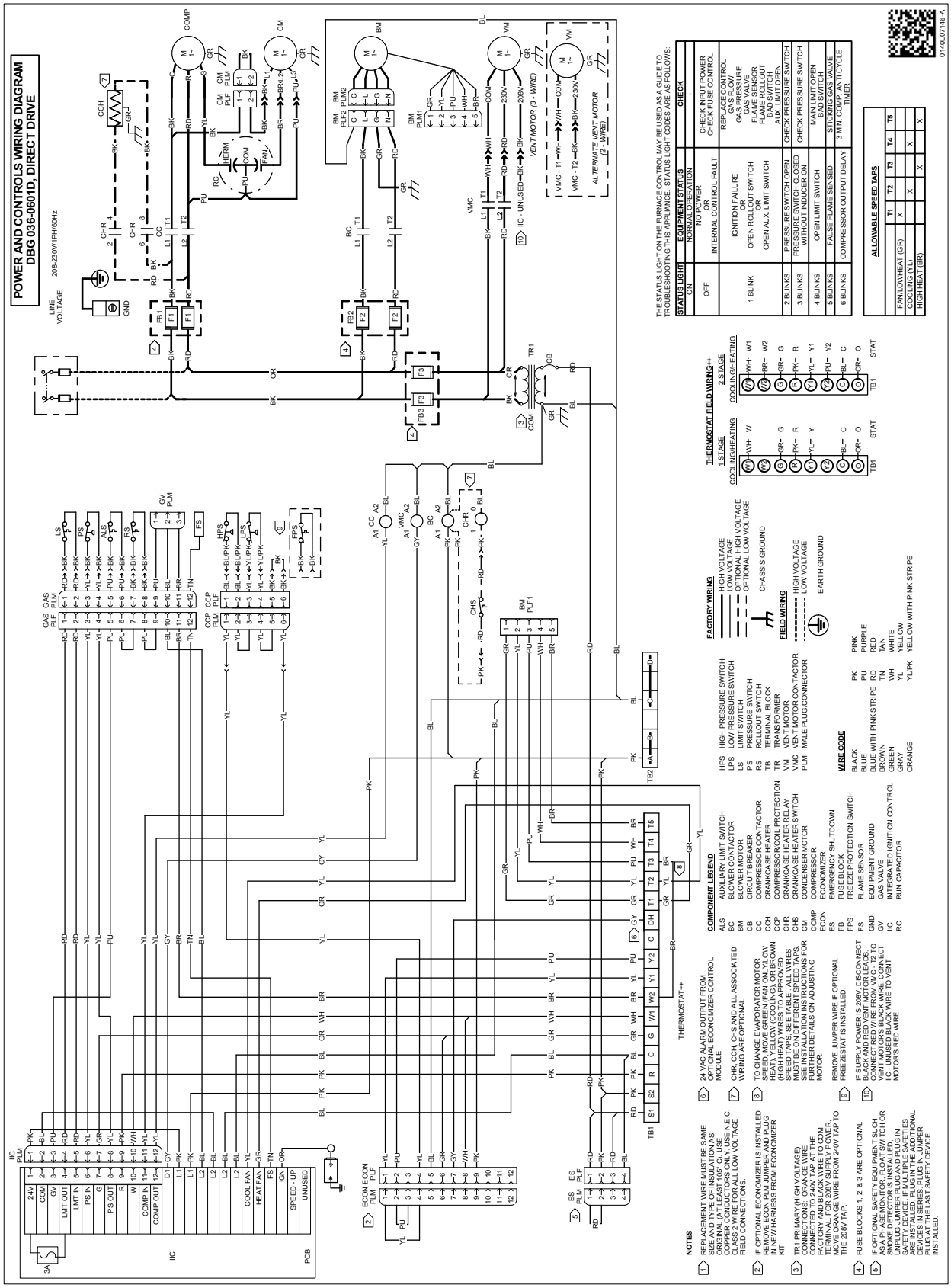

WARNING

High Voltage: Disconnect all power before servicing or installing this unit. Multiple power sources may be present. Failure to do so may cause property damage, personal injury, or death.

Wiring is subject to change. Always refer to the wiring diagram on the unit for the most up-to-date wiring.

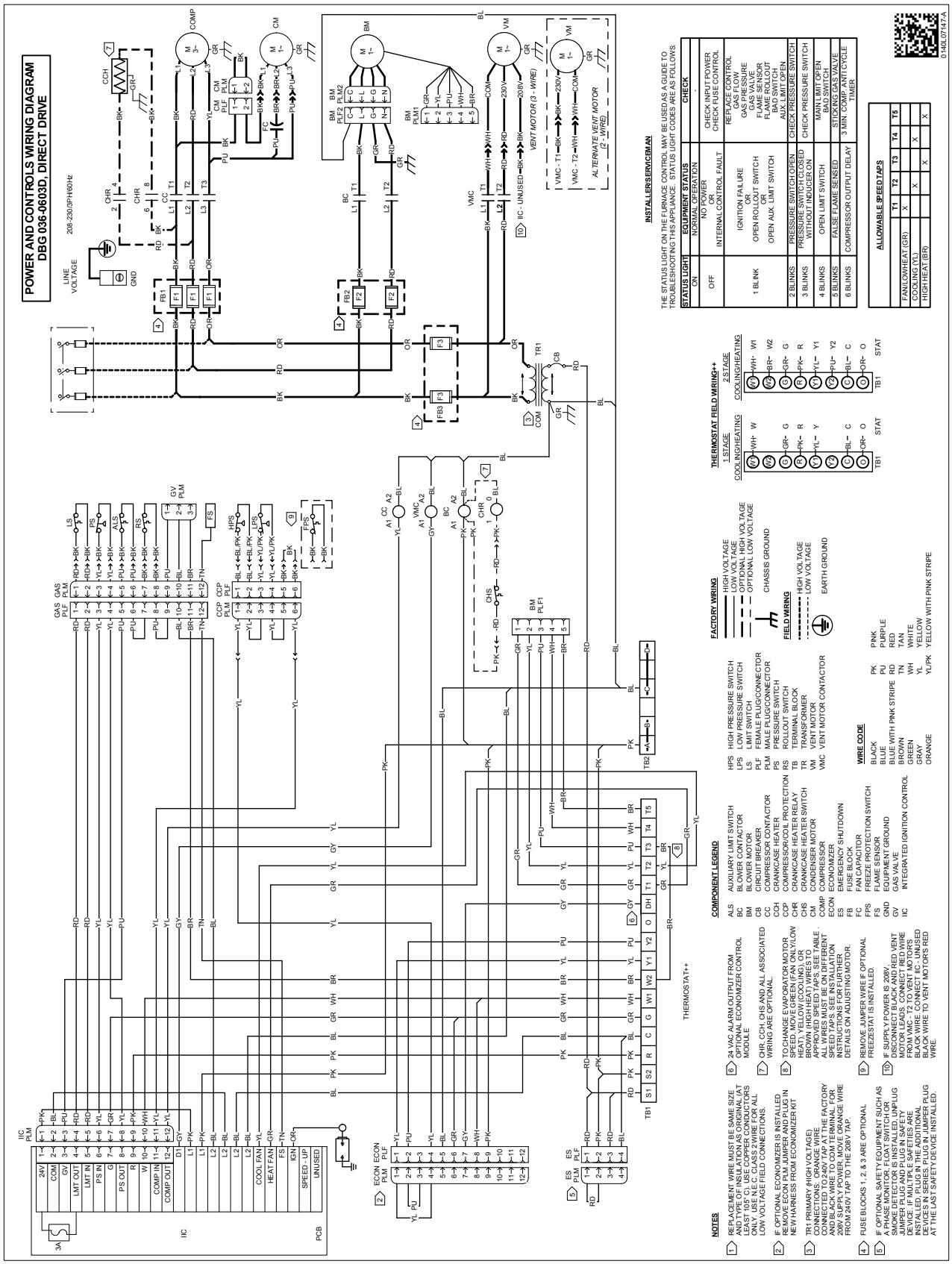

WARNING

High Voltage: Disconnect all power before servicing or installing this unit. Multiple power sources may be present. Failure to do so may cause property damage, personal injury, or death.

Wiring is subject to change. Always refer to the wiring diagram on the unit for the most up-to-date wiring.

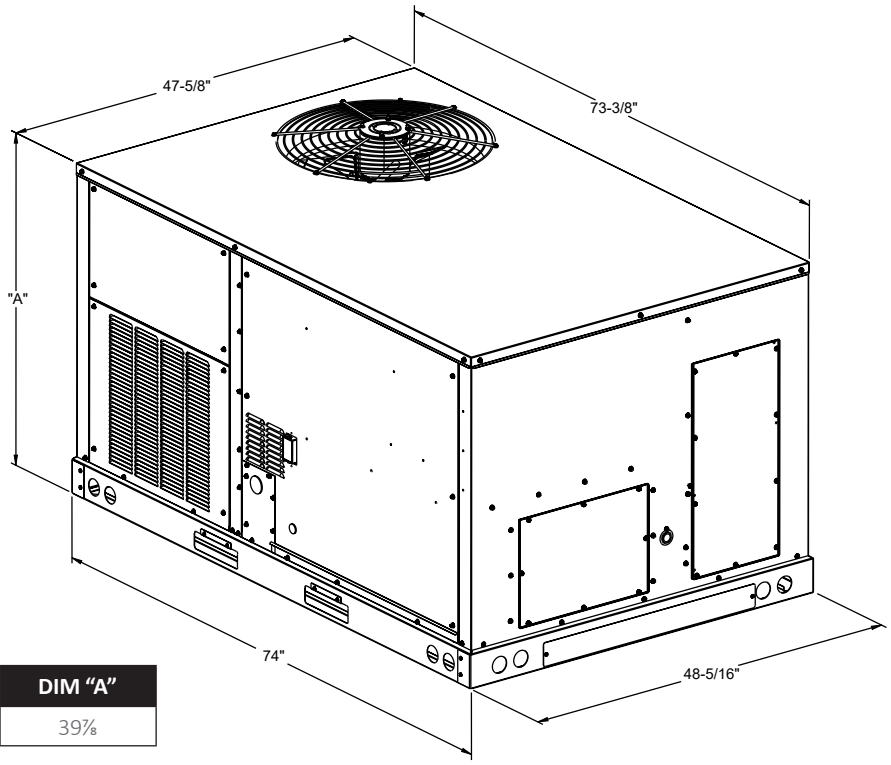

Model Size	DIM "A"
3,4 & 5	39⅞

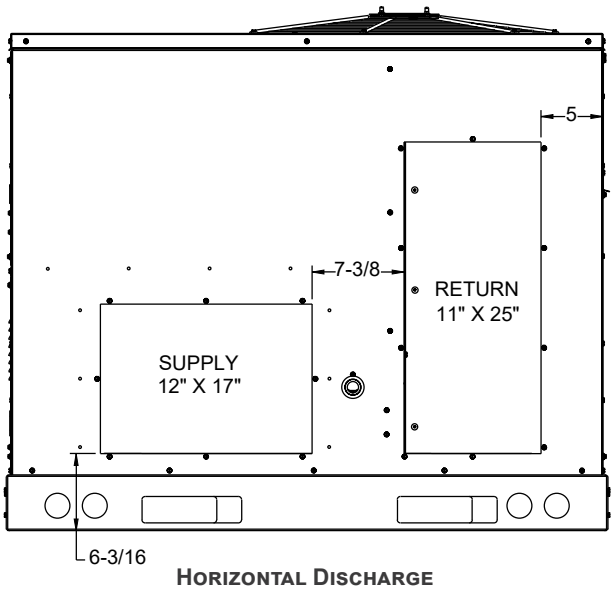

Horizontal Discharge

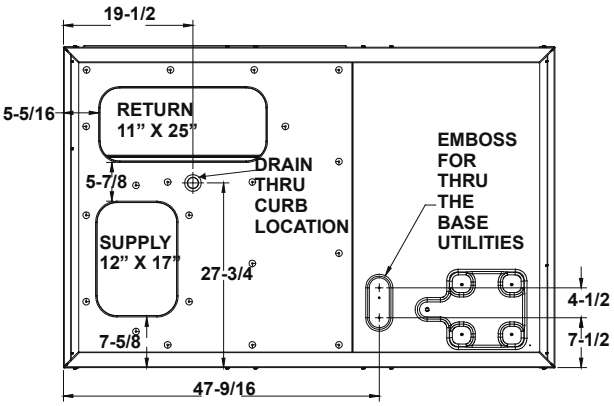

BOTTOM VIEW OF UNIT

Vertical Discharge

Electrical Connections

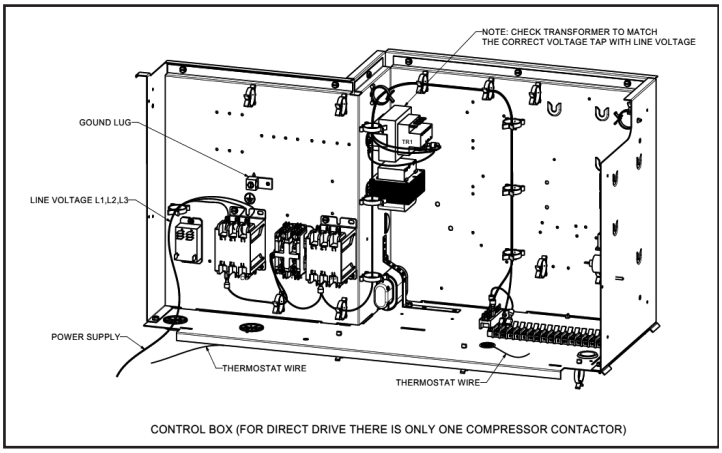

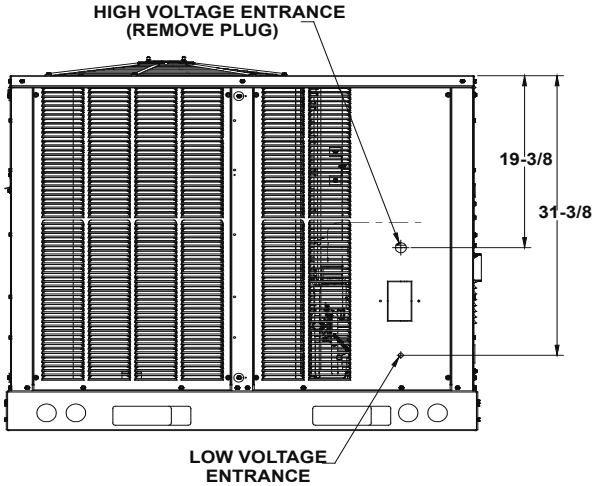

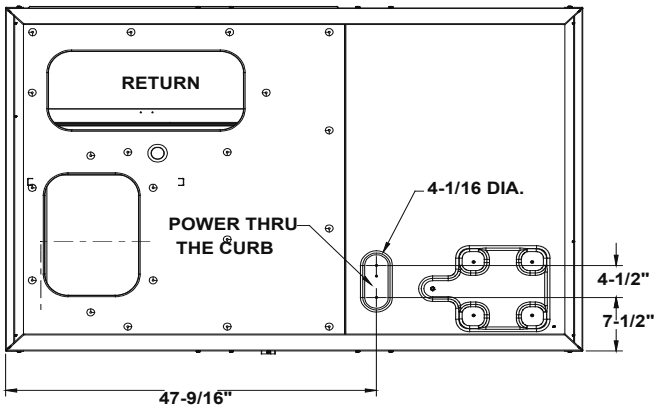

Unit Clearances

Service Clearance

Allow for recommended service clearances as shown in figure to the right. In situations that have multiple units, a 36” minimum clearance is required between the condenser coils. A clearance of 48” is recommended on all sides of the unit to allow service access and to ensure proper ventilation and condenser airflow. The top of the unit should be unobstructed. Provide a roof walkway along the sides of the unit for service and access to controls and components. Contact your Daikin sales representative for service requirements less than those recommended.

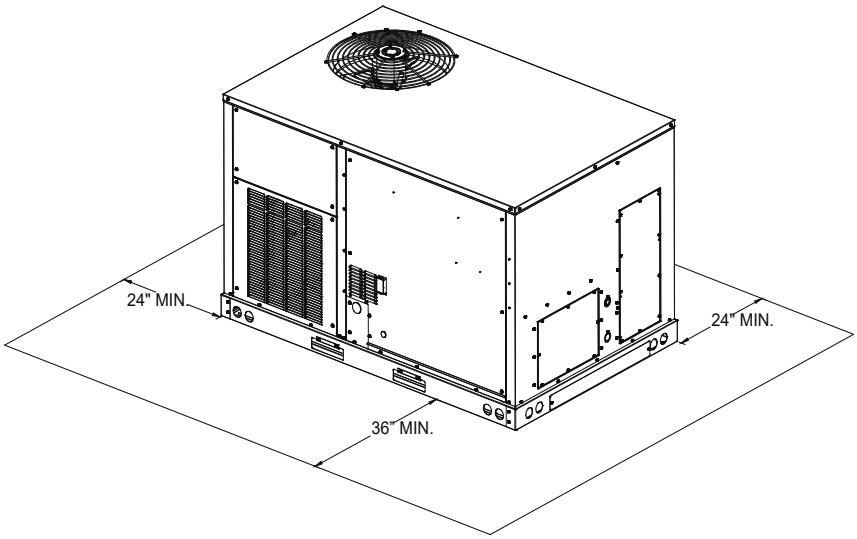

Unit Location

The structural engineer must verify that the roof has adequate support and ability to minimize deflection. Take extreme caution when using on a wooden roof structure. Unit condenser coils should be in a location that avoids any heated exhaust air.

Allow sufficient space around the unit for maintenance/service clearance. Consult your Daikin sales representative if available clearances do not meet minimum recommendations.

Where code considerations, such as the NEC, require extended clearances, these take precedence.

Provisions for forks have been included in the unit base frame. No other fork locations are approved.

» Unit must be lifted by the four lifting holes located at the base frame corners.

» Lifting cables should be attached to the unit with shackles.

» The distance between the crane hook and the top of the unit must not be less than 60".

» Two spreader bars must span over the unit to prevent damage to the cabinet by the lift cables. Spreader bars must be of sufficient length so that cables do not come in contact with the unit during transport. Remove wood struts mounted beneath unit base frame before setting unit on roof curb. These struts are intended to protect unit base frame from forklift damage. To remove the struts, extract the sheet metal retainers and pull the struts through the base of the unit. Refer to rigging label on the unit.

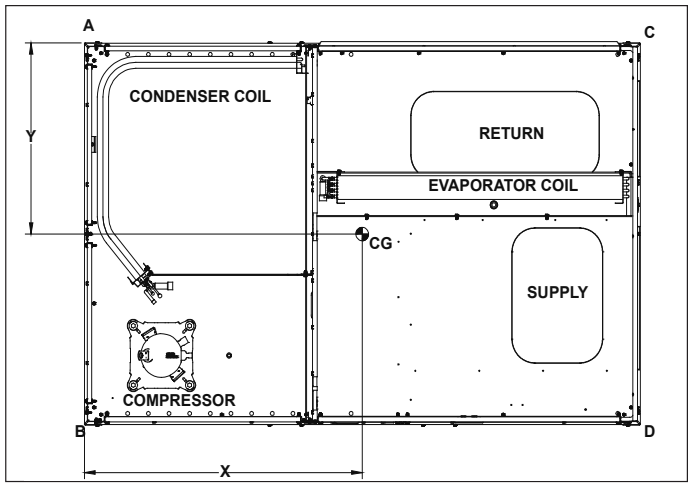

Corner & Center-of-Gravity Locations

Important: If using bottom discharge with roof curb, ductwork should be attached to the curb prior to installing the unit. Refer to the Roof Curb Installation Instructions for proper curb installation. Curbing must be installed in compliance with the National Roofing Contractors Association Manual. Lower unit carefully onto roof mounting curb. While rigging the unit, the center of gravity will cause the condenser end to be lower than the supply air end. Bring condenser end of unit into alignment with the curb. With condenser end of the unit resting on curb member and using curb as a fulcrum, lower opposite end of the unit until entire unit is seated on the curb. When a rectangular cantilever curb is used, take care to center the unit. Check for proper alignment and orientation of supply and return openings with duct.

Roof Curb Installation

The roof curb is field-assembled and must be installed level (within 1/16" per foot side to side). A sub-base must be constructed by the contractor in applications involving pitched roofs. Gaskets are furnished and must be installed between the unit and curb. For proper installation, follow NRCA guidelines. In applications requiring post and rail installation, an I-beam securely mounted on multiple posts should support the unit on each side. In addition, the insulation on the underside of the unit should be protected from the elements. Applications in geographic areas subjected to seismic or hurricane conditions must meet code requirements for fastening the unit to the curb and the curb to the building structure. For further and more detailed information please refer to our Daikin Light Commercial Packaged unit IOD.

Weights

Model	Shipping Weight (lbs)	Operating Weight (lbs)	Corner Weights (lbs)				Length	Width
			A	B	C	D	X (in)	Y (in)
DBG0363DH00001S	615	573	106	195	128	144	35	28⅜
DBG0363DL00001S	605	557	134	155	106	161	35½	27⅜
DBG0483DH00001S	654	609	124	183	124	186	36 7/10	29⅛
DBG0483DL00001S	645	601	108	219	150	124	33⅜	27⅜
DBG0603DH00001S	660	620	185	152	76	207	33 7/10	28⅛
DBG0603DL00001S	648	605	134	181	119	171	35⅝	28 1/10

Notes

Notes

Our continuing commitment to quality products may mean a change in specifications without notice.
©2022 **DAIKIN COMFORT TECHNOLOGIES MANUFACTURING, L.P.** • Houston, Texas • Printed in the USA.