DAIKIN
AIR INTELLIGENCE

# DBG Commercial

## Base Efficiency Gas/Electric Belt-Drive Packaged Rooftop Unit DBG Commercial 3-5 Nominal Tons

### 14 SEER / 11.5 EER

20 YEAR HEAT EXCHANGER LIMITED WARRANTY*

5 YEAR PARTS LIMITED WARRANTY*

Intertek

AHRI CERTIFIED

ISO 9001

ISO 14001 CERTIFIED ENVIRONMENTAL MANAGEMENT SYSTEM

*Complete warranty details available from your local distributor or manufacturer's representative or at www.daikincomfort.com or www.daikinac.com



Supersedes 01/21

# Our Perfect Package:

## Harnessing energy-efficient performance, proven technology, and enhanced comfort for life.

Since becoming the first company in Japan to manufacture packaged air conditioning systems, in 1951, Daikin has supported comfortable indoor living based on the strengths and technologies that have led to the growth of the company becoming one of the world's largest manufacturers of HVAC products, systems and refrigerants.

Today, as a comprehensive global manufacturer of HVAC products and systems, the Daikin brand is committed to being recognized as a truly global and excellent company capable of continually creating new value for its customers. The company plans to pursue sustainable growth and foster business operations that consistently harmonize with the goals of improving indoor comfort.

The group philosophy of the company includes:

- Creating new value continuously for customers
- Developing world leading energy-saving technology
- Being a flexible and dynamic organization
- Allowing employees to be the driving force for the success of the company
- Fostering an atmosphere of best practices, boldness, and innovation
- Thinking and acting globally

# Contents


| | | |
|---|---|---|
| 2 | Introduction | 2 |
| 4 | Nomenclature | 4 |
| 5 | Features and Benefits | 5 |
| | Applications | 8 |
| | Serviceability | 8 |
| 9 | Product Specifications | 9 |
| | Coil Dimensions | 12 |
| | AHRI Ratings | 12 |
| | Sound Data | 12 |
| 13 | Expanding Cooling Data | 13 |
| 25 | Heating Data | 25 |
| 27 | Air Flow | 27 |
| 33 | Static Pressure | 33 |
| 34 | Electrical Data | 34 |
| 36 | Wiring Diagrams | 36 |
| 37 | Dimensional Data | 37 |
| 38 | Electrical Connections | 38 |
| | Unit Clearances | 38 |
| 39 | Installation | 39 |
| | Weights | 39 |
| 40 | Accessories | 39 |
| 42 | Factory Installed Options | 42 |
| 42 | Field Installed Options | 42 |
| 43 | Factory and Field Installed Options | 43 |

# Nomenclature

| D | B | G | 036 | 3 | B | 045 | A | A | A | X | X | X | X | X | X | X | X | A | * |
|---|---|---|---|---|---|---|---|---|---|---|---|---|---|---|---|---|---|---|---|
| 1 | 2 | 3 | 4,5,6 | 7 | 8 | 9,10,11 | 12 | 13 | 14 | 15 | 16 | 17 | 18 | 19 | 20 | 21 | 22 | 23 | 24 |

**Revision Levels**
Major & Minor

**Brand**
D Daikin

**Configuration**
B New Base Efficiency

**Application**
C Cooling
G Gas Heat
H Heat Pump

**Nominal Cooling Capacity**
036 3 Tons
048 4 Tons
060 5 Tons

**Voltage**
3 208-230/3/60
4 460/3/60
7 575/3/60

**Supply Fan/Drive Type/Motor**
B Belt-Drive - Standard Static
C Belt-Drive - High-Static

**Nominal Heating Capacity**

| Gas/Electric | A/C Factory-Installed Electric Heat | |
|---|---|---|
| 045 45,000 BTU/h | XXX | No Heat |
| 070 70,000 BTU/h | 005 | 5kW |
| 115 115,000 BTU/h | 010 | 10 kW |
| 125 125,000 BTU/h | 015 | 15 kW |
| 140 140,000 BTU/h | 018 | 18 kW |
| | 020 | 20 kW |
| | 030 | 30 kW |

*See product specifications for heat size(s) available for each capacity.*

**Refrigeration Systems**
A Single-stage cooling modes

**Heat Exchanger**
X No options
A Standard Aluminized Exchanger
S Stainless Steel Exchanger

**Controls**
A Electromechanical controls

**Sensors**
X No Options
A RA Smoke Detector
B SA Smoke Detector
C RA & SA Smoke Detector

**Hail guard**
X No Options
C Hail Guard

**Economizer**
X No Options
A Ultra Low-Leak Downflow Economizer w/Enthalpy Sensor
B Low-Leak Downflow Economizer w/Enthalpy Sensor
G Ultra Low-Leak Downflow Economizer w/Dry Bulb Sensor
H Low-Leak Downflow Economizer w/Dry Bulb Sensor

**Electrical**
X No Options
A Non-Fused Disconnect
B Phase Monitor
C Thru-the-base connections
E Non-Fused Disconnect and Phase Monitor
F Non-Fused Disconnect and Thru-the-base connections
H Phase Monitor and Thru-the-base connections
L Non-Fused Disconnect, Thru-the-base connections and Phase Monitor

**Service Options**
X No Option
A Powered convenience outlet
B Non-powered convenience outlet
C Hinge Panels
D Hinged Panels and Powered convenience outlet
E Hinged Panels and non-powered convenience outlet

X No Options

**Power Exhaust**
X No Options
B Single-point power connection for Power Exhaust

X No Options

## G/E Stocking Models

New Daikin 3-5 Ton Belt-Drive

| Model Number | Code String | Model Number | Code String | Model Number | Code String |
|---|---|---|---|---|---|
| DBG0363BL00001S | DBG0363B045AAAXXXXXXXXAA | DBG0603BL00001S | DBG0603B090AAAXXXXXXXXAA | DBG0483CH00001F | DBG0483C115AAAXXXXXXXXAA |
| DBG0363BM00001S | DBG0363B070AAAXXXXXXXXAA | DBG0603BM00001S | DBG0603B115AAAXXXXXXXXAA | DBG0483CL00001F | DBG0483C070AAAXXXXXXXXAA |
| DBG0363BH00001S | DBG0363B090AAAXXXXXXXXAA | DBG0603BH00001S | DBG0603B140AAAXXXXXXXXAA | DBG0483CM00001F | DBG0483C090AAAXXXXXXXXAA |
| DBG0364BL00001S | DBG0364B045AAAXXXXXXXXAA | DBG0604BL00001S | DBG0604B090AAAXXXXXXXXAA | DBG0484CH00001F | DBG0484C115AAAXXXXXXXXAA |
| DBG0364BM00001S | DBG0364B070AAAXXXXXXXXAA | DBG0604BM00001S | DBG0604B115AAAXXXXXXXXAA | DBG0484CL00001F | DBG0484C070AAAXXXXXXXXAA |
| DBG0364BH00001S | DBG0364B090AAAXXXXXXXXAA | DBG0604BH00001S | DBG0604B140AAAXXXXXXXXAA | DBG0484CM00001F | DBG0484C090AAAXXXXXXXXAA |
| DBG0367BH00001S | DBG0367B090AAAXXXXXXXXAA | DBG0607BH00001S | DBG0607B140AAAXXXXXXXXAA | DBG0487CH00001F | DBG0487C115AAAXXXXXXXXAA |
| DBG0483BL00001S | DBG0483B070AAAXXXXXXXXAA | DBG0363CH00001F | DBG0363C090AAAXXXXXXXXAA | DBG0603CH00001F | DBG0603C140AAAXXXXXXXXAA |
| DBG0483BM00001S | DBG0483B090AAAXXXXXXXXAA | DBG0363CL00001F | DBG0363C045AAAXXXXXXXXAA | DBG0603CL00001F | DBG0603C090AAAXXXXXXXXAA |
| DBG0483BH00001S | DBG0483B115AAAXXXXXXXXAA | DBG0363CM00001F | DBG0363C070AAAXXXXXXXXAA | DBG0603CM00001F | DBG0603C115AAAXXXXXXXXAA |
| DBG0484BL00001S | DBG0484B070AAAXXXXXXXXAA | DBG0364CH00001F | DBG0364C090AAAXXXXXXXXAA | DBG0604CH00001F | DBG0604C140AAAXXXXXXXXAA |
| DBG0484BM00001S | DBG0484B090AAAXXXXXXXXAA | DBG0364CL00001F | DBG0364C045AAAXXXXXXXXAA | DBG0604CL00001F | DBG0604C090AAAXXXXXXXXAA |
| DBG0484BH00001S | DBG0484B115AAAXXXXXXXXAA | DBG0364CM00001F | DBG0364C070AAAXXXXXXXXAA | DBG0604CM00001F | DBG0604C115AAAXXXXXXXXAA |
| DBG0487BH00001S | DBG0487B115AAAXXXXXXXXAA | DBG0367CH00001F | DBG0367C090AAAXXXXXXXXAA | DBG0607CH00001F | DBG0607C140AAAXXXXXXXXAA |

Daikin Packaged Rooftop Units (RTUs) are built to perform, with features and options that help provide low installation and operation costs, superior indoor air quality, efficient operation, and longevity.

## Installation

Daikin Packaged units are designed with fast and easy installation in mind and are ideal for both new construction and retrofit projects. Our packaged rooftop units are built to be a direct replacement for most rooftop units on the field without the need of a curb adapter, to be able to replace the unit in a shorter time and at a lower cost (compared to the previous design).

## Cabinet Construction

Daikin packaged rooftop units are made with high quality galvanized steel with a powder-paint finish to provide higher corrosion resistance.

- Easy accessibility using our tool-less filter access (available on small chassis).
- The interior surface in the indoor air section is fully insulated to prevent sweating and thermal losses, using our foil face fiberglass insulation which also omits exposed filter fibers into the airstream.
- 1" Raised flanged edges around the supply and return offer easy installation for the duct connections.
- The full perimeter base rail is built using heavy gauge galvanized steel for a stronger structural installation. The base rails are a minimum of 3 ½" tall and include holes to allow for overhead rigging and lifting with forklifts.
- Electrical lines and gas lines can be brought through the base of the unit or through the horizontal knockout for easy installation and accessibility on the field.

## Compressor

High performance, low noise scroll compressors to match the required total load.

- Resiliently factory-mounted on rubber grommets for vibration isolation
- Refrigeration circuit includes both a low- and high-pressure transducer, high pressure safety switch and temperature sensors for the suction and discharge lines.
- Unit is factory charged with environmentally friendly R-410A refrigerant.
- Compressor location outside the condenser section to avoid air bypass.
- Internal overload protection included with compressor.

## Supply Fan

Indoor fan motors are belt-drive as standard to provide easy in the field belt and pulley adjustment for airflow control.

- Slide out forward curb fan for easy maintenance and replacement.
- High-static drive options for application with high airflow/static requirements.
- Each fan assembly is dynamically trim balanced at the factory before shipment for quick start-up and efficient operation.
- Motor with thermal overload and phase failure protection is provided for motor long lasting operation.

## Coils

All units use large face area outdoor coils. These coils are constructed with seamless copper tubes, mechanically bonded into aluminum plate-type fins with full drawn collars to completely cover the tubes for high operating efficiencies.

The indoor coil section is installed in a draw through configuration to provide better dehumidification.

- Coils are factory pressure tested to ensure pressure and leak integrity.
- Copper tube / aluminum fin coils on condenser and evaporator
- 5mm Smart Coil Technology on all condenser coils for improved performance and reduced refrigerant load.

## Controls and Wiring

Packaged rooftop units come equipped with a well-organized, large, easy to use, weatherproof internal control box with easy access, for a better user experience.

» Units are factory-wired with labeled color-coded wires and complete 24-volt Electromechanical controls package.

» Terminal blocks are provided as standard for easy installation and field power wiring.

## Filtration

Unit provides a draw-through filter section as standard for better air quality and long lasting component maintenance.

» Filters installed on the units are standard off the shelf sizes for easy replacement.

» One size filter per unit for low maintenance cost and easy replacement.

» Easy and fast filter service access.

## Heating Section

Wide range of natural gas selections effectively handle most comfort heating demand from morning warm-up control to full heat, all available with Daikin's Wrinkle Bend heat exchanger technology.

## Gas Furnace

ETL certified heating modules provide a custom match to specific design requirement.

» Wrinkle Bend Technology available on all Daikin gas heat exchangers. The Wrinkle Bend Technology reduces the manufacturing stress that leads to defects and pinholes in the tubes at the same time as it increases the gas turbulence to amplify the heat transfer.

» All single phase 3-5 ton Gas units have 80% AFUE.

» All 3-Phase models have a minimum 80% T.E. (Thermal Efficiency)

» User has the flexibility to order heat exchanger tubes with 20 Gauge, G160, aluminized steel or stainless steel to meet your application needs.

» The furnace has a tubular design with in-shot gas burner manifold and is installed downstream of the supply fan.

» The module contains an induced draft fan that will maintain a negative pressure in the heat exchanger tubes for the removal of the flue gases to protect indoor air quality.

» Each burner module provides flame roll-out safety protection switches and a high temperature limit switch for reliable operation.

» Induced draft fan includes an airflow safety switch to prevent heating operation in the event of no airflow for occupant safety.

» All burner assemblies are factory tested and adjusted prior to shipment.

» Heating control is fully integrated into the unit's control system for quick start-up and reliable control.

» Optional field installed LP kits are available for staged heating modules as well as high altitude kits.

## Electrical

Units are completely wired and tested at the factory to provide faster commissioning and start-up.

» Wiring complies with NEC requirements and all applicable UL standards.

» For ease of use, wiring and electrical components are number coded and labeled according to the electrical diagram.

» A 115 V GFI convenience outlet requiring independent power supply for the receptacle is optional.

» An optional unit powered 20 amp 115 V convenience outlet, complete with factory mounted transformer, disconnect switch, and primary and secondary overload protection, eliminates the need to pull a separate 115 V power source.

» Supply air fan, compressor, and condenser fan motor branch circuits have individual short circuit protection. Unit includes knockouts in the bottom of the main control panels for field wiring entrance.

» A single-point power connection with power block is standard and a terminal board is provided for connecting low voltage control wiring.

» For better serviceability an optional non-fused disconnect switch can be installed inside the control panel and operated by an externally mounted handle to disconnect the electrical power at the unit.

DAIKIN

## Applications

Daikin Rooftop units are intended for comfort cooling applications in normal heating, ventilating, and air conditioning. Consult your local Daikin sales representative for applications involving operations at high ambient temperatures, high altitudes, non-cataloged voltages, or for job-specific unit selections that fall outside of the range of the catalog tables.

For proper operation, units should be rigged in accordance with instructions stated on the installation manual. Fire dampers, if required, must be installed in the ductwork according to local and/or state codes. No space is allowed for these dampers in the unit.

Follow factory check, test and start procedures explicitly to achieve satisfactory start-up and operation.

Most rooftop applications take advantage of the significant energy savings provided with economizer operation. When an economizer system is used, mechanical refrigeration is typically not required below an ambient temperature of 50°F.

## Serviceability

Daikin packaged rooftop units are built with serviceability in mind, designed to make future maintenance and service on the unit easy and accessible.

- Our packaged rooftop units offer a slide out blower to facilitate the access and removal of the fan.
- Filter panels on the small chassis line offer tool-less access for easy maintenance.
- Independent compressor outside of the air bypass to eliminate component blockage and provide easy access.
- Labeled field connections, color coded and continuously marked wire to identify point-to-point component connections.
- All 3 - 5 ton units are designed for convertible airflow orientation to serve downflow or horizontal applications. Every unit ships prepared to convert to horizontal orientation in the field if required.
- Condenser clean out from inside-out.
- Easy access to gas valves and control panel.

| Model | DBG0363BL00001S | DBG0363BM00001S | DBG0363BH00001S | DBG0364BL00001S | DBG0364BM00001S | DBG0364BH00001S | DBG0367BH00001S |
|---|---|---|---|---|---|---|---|
| **COOLING CAPACITY** | | | | | | | |
| Total, BTU/h | 35,000 | 35,000 | 35,000 | 35,000 | 35,000 | 35,000 | 35,000 |
| SEER / EER | 14.0/11.5 | 14.0/11.5 | 14.0/11.5 | 14.0/11.5 | 14.0/11.5 | 14.0/11.5 | 14.0/11.5 |
| AHRI Reference # | 205134933 | 205134933 | 205134933 | 205134934 | 205134934 | 205134934 | 205134935 |
| **HEATING CAPACITY** | | | | | | | |
| Heat Range | Low | Medium | High | Low | Medium | High | High |
| No. of Burners | 2 | 3 | 5 | 2 | 3 | 5 | 5 |
| High Stage Input / Output (KBTU/H) | 45.0/36.0 | 70.0/56.0 | 90.0/72.0 | 45.0/36.0 | 70.0/56.0 | 90.0/72.0 | 90.0/72.0 |
| Low Stage Input / Output (KBTU/H) | 33.7/27.0 | 52.5/42.0 | 67.5/54.0 | 33.7/27.0 | 52.5/42.0 | 67.5/54.0 | 67.5/54.0 |
| Thermal Efficiency (T.E.) | 80 | 80 | 80 | 80 | 80 | 80 | 80 |
| Annual Fuel Utilization Efficiency (AFUE) | -- | -- | -- | -- | -- | -- | -- |
| High Stage Temperature Rise Range (°F) | 15 - 45 | 25 - 55 | 45 - 75 | 15 - 45 | 25 - 55 | 45 - 75 | 45 - 75 |
| Low Stage Temperature Rise Range (°F) | 10 - 40 | 20 - 50 | 40 - 70 | 10 - 40 | 20 - 50 | 40 - 70 | 40 - 70 |
| **EVAPORATOR MOTOR COIL** | | | | | | | |
| Motor Type | Belt-Drive | Belt-Drive | Belt-Drive | Belt-Drive | Belt-Drive | Belt-Drive | Belt-Drive |
| External Static Pressure (ESP) | Standard | Standard | Standard | Standard | Standard | Standard | Standard |
| Wheel Dia. X Width | 12x10 | 12x10 | 12x10 | 12x10 | 12x10 | 12x10 | 12x10 |
| Indoor Nominal CFM | 1160 | 1160 | 1160 | 1160 | 1160 | 1160 | 1160 |
| RPM | 1725 | 1725 | 1725 | 1725 | 1725 | 1725 | 1725 |
| Indoor Horsepower | 1.00 | 1.00 | 1.00 | 1.00 | 1.00 | 1.00 | 1.50 |
| Filter Size (in) | 20 X 25 X 2 (2) | 20 X 25 X 2 (2) | 20 X 25 X 2 (2) | 20 X 25 X 2 (2) | 20 X 25 X 2 (2) | 20 X 25 X 2 (2) | 20 X 25 X 2 (2) |
| Drain Size (NPT) | 3/4 | 3/4 | 3/4 | 3/4 | 3/4 | 3/4 | 3/4 |
| R-410A Refrigerant Charge (oz.) | 99 | 99 | 99 | 99 | 99 | 99 | 99 |
| Evaporator Coil Face Area ($ft^2$) | 6.4 | 6.4 | 6.4 | 6.4 | 6.4 | 6.4 | 6.4 |
| Rows Deep/ Fins per Inch | 4 / 16 | 4 / 16 | 4 / 16 | 4 / 16 | 4 / 16 | 4 / 16 | 4 / 16 |
| **CONDENSER FAN/COIL** | | | | | | | |
| Quantity of Condenser Fan Motors | 1 | 1 | 1 | 1 | 1 | 1 | 1 |
| RPM (High/Low stage) | 810 | 810 | 810 | 810 | 810 | 810 | 810 |
| Outdoor Horsepower | 0.17 | 0.17 | 0.17 | 0.17 | 0.17 | 0.17 | 0.17 |
| Fan Diameter/ # Fan Blades | 22 / 3 | 22 / 3 | 22 / 3 | 22 / 3 | 22 / 3 | 22 / 3 | 22 / 3 |
| Face Area ($ft^2$) | 12.5 | 12.5 | 12.5 | 12.5 | 12.5 | 12.5 | 12.5 |
| Rows Deep / Fins per Inch | 2 / 28 | 2 / 28 | 2 / 28 | 2 / 28 | 2 / 28 | 2 / 28 | 2 / 28 |
| **COMPRESSOR (ALL SINGLE-STAGE)** | | | | | | | |
| Quantity / Type / Stages | 1 / Scroll / 1 | 1 / Scroll / 1 | 1 / Scroll / 1 | 1 / Scroll / 1 | 1 / Scroll / 1 | 1 / Scroll / 1 | 1 / Scroll / 1 |
| Compressor RLA / LRA | 10.4 / 73.0 | 10.4 / 73.0 | 10.4 / 73.0 | 5.8 / 38 | 5.8 / 38 | 5.8 / 38 | 3.8 / 36 |
| **ELECTRICAL DATA** | | | | | | | |
| Voltage-Phase-Frequency | 208/230-3-60 | 208/230-3-60 | 208/230-3-60 | 460-3-60 | 460-3-60 | 460-3-60 | 575--3-60 |
| Indoor Blower FLA | 3.4 | 3.4 | 3.4 | 1.7 | 1.7 | 1.7 | 2.3 |
| Max External Static (In. W.C.) | 0.7 | 0.7 | 0.7 | 0.7 | 0.7 | 0.7 | 0.7 |
| Outdoor Fan FLA | 0.95 | 0.95 | 0.95 | 0.48 | 0.48 | 0.48 | 0.39 |
| Min. Circuit Ampacity[1] | 17.4/17.4 | 17.4/17.4 | 17.4/17.4 | 9.39 | 9.39 | 9.39 | 7.42 |
| Max. Overcurrent Protection (A)[2] | 25/25 | 25/25 | 25/25 | 15 | 15 | 15 | 15 |
| Power Supply Conduit Hole Dia. (in) | 1.125 | 1.125 | 1.125 | 1.125 | 1.125 | 1.125 | 1.125 |
| Low-Voltage Conduit Hole Dia. (in) | 0.5 | 0.5 | 0.5 | 0.5 | 0.5 | 0.5 | 0.5 |
| **OPERATING WEIGHT (LBS.)** | | | | | | | |
| Operating Weight (lbs) | 586 | 599 | 608 | 586 | 599 | 608 | 608 |
| **SHIPPING WEIGHT (LBS.)** | | | | | | | |
| Ship Weight (lbs) | 632 | 645 | 654 | 632 | 645 | 654 | 654 |

[1] Wire size should be determined in accordance with National Electrical Codes. Extensive wire runs will require larger wire sizes.
[2] May use fuses or HACR-type circuit breakers of the same size as noted.
Note: Always check the S&R plate for electrical data on the unit being installed.

| Model | DBG0483BL00001S | DBG0483BM00001S | DBG0483BH00001S | DBG0484BL00001S | DBG0484BM00001S | DBG0484BH00001S | DBG0487BH00001S |
|---|---|---|---|---|---|---|---|
| **COOLING CAPACITY** | | | | | | | |
| Total, BTU/h | 46,500 | 46,500 | 46,500 | 46,500 | 46,500 | 46,500 | 46,500 |
| SEER / EER | 14.0/11.5 | 14.0/11.5 | 14.0/11.5 | 14.0/11.5 | 14.0/11.5 | 14.0/11.5 | 14.0/11.5 |
| AHRI Reference # | 205134936 | 205134936 | 205134936 | 205134937 | 205134937 | 205134937 | 205134938 |
| **HEATING CAPACITY** | | | | | | | |
| Heat Range | Low | Medium | High | Low | Medium | High | High |
| No. of Burners | 3 | 4 | 5 | 3 | 4 | 5 | 5 |
| High Stage Input / Output (KBTU/H) | 70.0/56.0 | 90.0/72.0 | 115.0/92.0 | 70.0/56.0 | 90.0/72.0 | 115.0/92.0 | 115.0/92.0 |
| Low Stage Input / Output (KBTU/H) | 52.5/42.0 | 67.5/54.0 | 86.3/69.0 | 52.5/42.0 | 67.5/54.0 | 86.3/69.0 | 86.3/69.0 |
| Thermal Efficiency (T.E.) | 80 | 80 | 80 | 80 | 80 | 80 | 80 |
| Annual Fuel Utilization Efficiency (AFUE) | -- | -- | -- | -- | -- | -- | -- |
| High Stage Temperature Rise Range (°F) | 20 - 50 | 30 - 60 | 40 - 70 | 20 - 50 | 30 - 60 | 40 - 70 | 40 - 70 |
| Low Stage Temperature Rise Range (°F) | 15 - 45 | 25 - 55 | 35 - 65 | 15 - 45 | 25 - 55 | 35 - 65 | 35 - 65 |
| **EVAPORATOR MOTOR COIL** | | | | | | | |
| Motor Type | Belt-Drive | Belt-Drive | Belt-Drive | Belt-Drive | Belt-Drive | Belt-Drive | Belt-Drive |
| External Static Pressure (ESP) | Standard | Standard | Standard | Standard | Standard | Standard | Standard |
| Wheel Dia. X Width | 12x10 | 12x10 | 12x10 | 12x10 | 12x10 | 12x10 | 12x10 |
| Indoor Nominal CFM | 1470 | 1470 | 1470 | 1470 | 1470 | 1470 | 1470 |
| RPM | 1725 | 1725 | 1725 | 1725 | 1725 | 1725 | 1725 |
| Indoor Horsepower | 1.0 | 1.0 | 1.0 | 1.0 | 1.0 | 1.0 | 1.5 |
| Filter Size (in) | 20 X 25 X 2 (2) | 20 X 25 X 2 (2) | 20 X 25 X 2 (2) | 20 X 25 X 2 (2) | 20 X 25 X 2 (2) | 20 X 25 X 2 (2) | 20 X 25 X 2 (2) |
| Drain Size (NPT) | 3/4 | 3/4 | 3/4 | 3/4 | 3/4 | 3/4 | 3/4 |
| R-410A Refrigerant Charge (oz.) | 108 | 108 | 108 | 108 | 108 | 108 | 108 |
| Evaporator Coil Face Area ($ft^2$) | 6.4 | 6.4 | 6.4 | 6.4 | 6.4 | 6.4 | 6.4 |
| Rows Deep/ Fins per Inch | 4 / 16 | 4 / 16 | 4 / 16 | 4 / 16 | 4 / 16 | 4 / 16 | 4 / 16 |
| **CONDENSER FAN/COIL** | | | | | | | |
| Quantity of Condenser Fan Motors | 1 | 1 | 1 | 1 | 1 | 1 | 1 |
| RPM (High/Low stage) | 1075 | 1075 | 1075 | 1075 | 1075 | 1075 | 1075 |
| Outdoor Horsepower | 0.25 | 0.25 | 0.25 | 0.25 | 0.25 | 0.25 | 0.25 |
| Fan Diameter/ # Fan Blades | 22 / 4 | 22 / 4 | 22 / 4 | 22 / 4 | 22 / 4 | 22 / 4 | 22 / 4 |
| Face Area ($ft^2$) | 13.3 | 13.3 | 13.3 | 13.3 | 13.3 | 13.3 | 13.3 |
| Rows Deep / Fins per Inch | 2 / 28 | 2 / 28 | 2 / 28 | 2 / 28 | 2 / 28 | 2 / 28 | 2 / 28 |
| **COMPRESSOR (ALL SINGLE-STAGE)** | | | | | | | |
| Quantity / Type / Stages | 1 / Scroll / 1 | 1 / Scroll / 1 | 1 / Scroll / 1 | 1 / Scroll / 1 | 1 / Scroll / 1 | 1 / Scroll / 1 | 1 / Scroll / 1 |
| Compressor RLA / LRA | 13.1 / 83.1 | 13.1 / 83.1 | 13.1 / 83.1 | 6.1 / 41 | 6.1 / 41 | 6.1 / 41 | 4.4 / 33 |
| **ELECTRICAL DATA** | | | | | | | |
| Voltage-Phase-Frequency | 208/230-3-60 | 208/230-3-60 | 208/230-3-60 | 460-3-60 | 460-3-60 | 460-3-60 | 575--3-60 |
| Indoor Blower FLA | 3.4 | 3.4 | 3.4 | 1.7 | 1.7 | 1.7 | 2.3 |
| Max External Static (In. W.C.) | 0.7 | 0.7 | 0.7 | 0.7 | 0.7 | 0.7 | 0.7 |
| Outdoor Fan FLA | 1.4 | 1.4 | 1.4 | 0.7 | 0.7 | 0.7 | 0.55 |
| Min. Circuit Ampacity[1] | 21.2/21.2 | 21.2/21.2 | 21.2/21.2 | 10 | 10 | 10 | 8.3 |
| Max. Overcurrent Protection (A)[2] | 30/30 | 30/30 | 30/30 | 15 | 15 | 15 | 15 |
| Power Supply Conduit Hole Dia. (in) | 1.125 | 1.125 | 1.125 | 1.125 | 1.125 | 1.125 | 1.125 |
| Low-Voltage Conduit Hole Dia. (in) | 0.5 | 0.5 | 0.5 | 0.5 | 0.5 | 0.5 | 0.5 |
| **OPERATING WEIGHT (LBS.)** | | | | | | | |
| Operating Weight (lbs) | 631 | 637 | 644 | 631 | 637 | 644 | 644 |
| **SHIPPING WEIGHT (LBS.)** | | | | | | | |
| Ship Weight (lbs) | 677 | 683 | 690 | 677 | 683 | 690 | 690 |

[1] Wire size should be determined in accordance with National Electrical Codes. Extensive wire runs will require larger wire sizes.
[2] May use fuses or HACR-type circuit breakers of the same size as noted.
Note: Always check the S&R plate for electrical data on the unit being installed.

| Model | DBG0603BL00001S | DBG0603BM00001S | DBG0603BH00001S | DBG0604BL00001S | DBG0604BM00001S | DBG0604BH00001S | DBG0607BH00001S |
|---|---|---|---|---|---|---|---|
| **COOLING CAPACITY** | | | | | | | |
| Total, BTU/h | 57,000 | 57,000 | 57,000 | 57,000 | 57,000 | 57,000 | 57,000 |
| SEER / EER | 14.0/11.5 | 14.0/11.5 | 14.0/11.5 | 14.0/11.5 | 14.0/11.5 | 14.0/11.5 | 14.0/11.5 |
| AHRI Reference # | 205134939 | 205134939 | 205134939 | 205134940 | 205134940 | 205134940 | 205134941 |
| **HEATING CAPACITY** | | | | | | | |
| Heat Range | Low | Medium | High | Low | Medium | High | High |
| No. of Burners | 4 | 5 | 6 | 4 | 5 | 6 | 6 |
| High Stage Input / Output (KBTU/H) | 90.0/72.0 | 115.0/92.0 | 140.0/112.0 | 90.0/72.0 | 115.0/92.0 | 140.0/112.0 | 140.0/112.0 |
| Low Stage Input / Output (KBTU/H) | 67.5/54.0 | 86.3/69.0 | 105.0/84.0 | 67.5/54.0 | 86.3/69.0 | 105.0/84.0 | 105.0/84.0 |
| Thermal Efficiency (T.E.) | 80 | 80 | 80 | 80 | 80 | 80 | 80 |
| Annual Fuel Utilization Efficiency (AFUE) | -- | -- | -- | -- | -- | -- | -- |
| High Stage Temperature Rise Range (°F) | 25 - 55 | 35 - 65 | 45 - 75 | 25 - 55 | 35 - 65 | 45 - 75 | 45 - 75 |
| Low Stage Temperature Rise Range (°F) | 20 - 50 | 30 - 60 | 40 - 70 | 20 - 50 | 30 - 60 | 40 - 70 | 40 - 70 |
| **EVAPORATOR MOTOR COIL** | | | | | | | |
| Motor Type | Belt-Drive | Belt-Drive | Belt-Drive | Belt-Drive | Belt-Drive | Belt-Drive | Belt-Drive |
| External Static Pressure (ESP) | Standard | Standard | Standard | Standard | Standard | Standard | Standard |
| Wheel Dia. X Width | 12x10 | 12x10 | 12x10 | 12x10 | 12x10 | 12x10 | 12x10 |
| Indoor Nominal CFM | 1640 | 1640 | 1640 | 1640 | 1640 | 1640 | 1640 |
| RPM | 1760 | 1760 | 1760 | 1760 | 1760 | 1760 | 1760 |
| Indoor Horsepower | 1.0 | 1.0 | 1.0 | 1.0 | 1.0 | 1.0 | 1.0 |
| Filter Size (in) | 20 X 25 X 2 (2) | 20 X 25 X 2 (2) | 20 X 25 X 2 (2) | 20 X 25 X 2 (2) | 20 X 25 X 2 (2) | 20 X 25 X 2 (2) | 20 X 25 X 2 (2) |
| Drain Size (NPT) | 3/4 | 3/4 | 3/4 | 3/4 | 3/4 | 3/4 | 3/4 |
| R-410A Refrigerant Charge (oz.) | 111 | 111 | 111 | 111 | 111 | 111 | 111 |
| Evaporator Coil Face Area ($ft^2$) | 6.4 | 6.4 | 6.4 | 6.4 | 6.4 | 6.4 | 6.4 |
| Rows Deep/ Fins per Inch | 4 / 16 | 4 / 16 | 4 / 16 | 4 / 16 | 4 / 16 | 4 / 16 | 4 / 16 |
| **CONDENSER FAN/COIL** | | | | | | | |
| Quantity of Condenser Fan Motors | 1 | 1 | 1 | 1 | 1 | 1 | 1 |
| RPM (High/Low stage) | 1122 | 1122 | 1122 | 1050 | 1050 | 1050 | 1050 |
| Outdoor Horsepower | 0.33 | 0.33 | 0.33 | 0.33 | 0.33 | 0.33 | 0.33 |
| Fan Diameter/ # Fan Blades | 22 / 3 | 22 / 3 | 22 / 3 | 22 / 3 | 22 / 3 | 22 / 3 | 22 / 3 |
| Face Area ($ft^2$) | 17.1 | 17.1 | 17.1 | 17.1 | 17.1 | 17.1 | 17.1 |
| Rows Deep / Fins per Inch | 2 / 28 | 2 / 28 | 2 / 28 | 2 / 28 | 2 / 28 | 2 / 28 | 2 / 28 |
| **COMPRESSOR (ALL SINGLE-STAGE)** | | | | | | | |
| Quantity / Type / Stages | 1 / Scroll / 1 | 1 / Scroll / 1 | 1 / Scroll / 1 | 1 / Scroll / 1 | 1 / Scroll / 1 | 1 / Scroll / 1 | 1 / Scroll / 1 |
| Compressor RLA / LRA | 15.9 / 110.0 | 15.9 / 110.0 | 15.9 / 110.0 | 7.1 / 52 | 7.1 / 52 | 7.1 / 52 | 5.1 / 39.5 |
| **ELECTRICAL DATA** | | | | | | | |
| Voltage-Phase-Frequency | 208/230-3-60 | 208/230-3-60 | 208/230-3-60 | 460-3-60 | 460-3-60 | 460-3-60 | 575--3-60 |
| Indoor Blower FLA | 3.2 | 3.2 | 3.2 | 1.5 | 1.5 | 1.5 | 1.2 |
| Max External Static (In. W.C.) | 0.8 | 0.8 | 0.8 | 0.8 | 0.8 | 0.8 | 0.8 |
| Outdoor Fan FLA | 2 | 2 | 2 | 0.85 | 0.85 | 0.85 | 0.67 |
| Min. Circuit Ampacity[1] | 25.1/25.1 | 25.1/25.1 | 25.1/25.1 | 11.2 | 11.2 | 11.2 | 12.3 |
| Max. Overcurrent Protection (A)[2] | 40/40 | 40/40 | 40/40 | 15 | 15 | 15 | 15 |
| Power Supply Conduit Hole Dia. (in) | 1.125 | 1.125 | 1.125 | 1.125 | 1.125 | 1.125 | 1.125 |
| Low-Voltage Conduit Hole Dia. (in) | 0.5 | 0.5 | 0.5 | 0.5 | 0.5 | 0.5 | 0.5 |
| **OPERATING WEIGHT (LBS.)** | | | | | | | |
| Operating Weight (lbs) | 663 | 663 | 670 | 663 | 663 | 670 | 670 |
| **SHIPPING WEIGHT (LBS.)** | | | | | | | |
| Ship Weight (lbs) | 709 | 709 | 716 | 709 | 709 | 716 | 716 |

[1] Wire size should be determined in accordance with National Electrical Codes. Extensive wire runs will require larger wire sizes.
[2] May use fuses or HACR-type circuit breakers of the same size as noted.
Note: Always check the S&R plate for electrical data on the unit being installed.

## Coil Dimensions

| Model | Tons | Fin height in. | Fin length in. |
|---|---|---|---|
| DBG | 3 | 24.25 | 38.07 |
| | 4 | 24.25 | 38.07 |
| | 5 | 24.25 | 38.07 |

## AHRI Ratings

| MODEL | CAPACITY | EER | SEER |
|---|---|---|---|
| DBG036*B | 35,000 | 11.5 | 14 |
| DBG048*B | 46,500 | 11.5 | 14 |
| DBG060*B | 57,000 | 11.5 | 14 |

## Sound Data

| Model | Outdoor sound (dB) at 60 Hz | | | | | | | | |
|---|---|---|---|---|---|---|---|---|---|
| | A-Weighted | 63 | 125 | 250 | 500 | 1000 | 2000 | 4000 | 8000 |
| 036 | 75 | 78.5 | 85.4 | 74.4 | 71.8 | 69.1 | 65.8 | 60.9 | 59.2 |
| 048 | 73 | 82.5 | 78.1 | 71.6 | 69.5 | 68.0 | 66.1 | 59.5 | 58.6 |
| 060 | 76 | 84.4 | 80.5 | 76.2 | 72.9 | 70.9 | 67.4 | 63.8 | 63.1 |

**Notes:**

[1] Outdoor sound data is measured in accordance with AHRI standard 270.

[2] Measurements are expressed in terms of sound power. Do not compare these values to sound pressure values because sound pressure depends on specific environment factors which normally do not match individual applications. Sound power values are independent of the environment and therefore more accurate.

[3] A-weighted sound ratings filter out high and very low frequencies, to better approximate the response of "average" human ear. A-weighted measurements for Daikin units are taken in accordance with AHRI standard 270.

| | | | Outdoor Ambient Temperature | | | | | | | | | | | | | | | | | | | | | | | |
|---|---|---|---|---|---|---|---|---|---|---|---|---|---|---|---|---|---|---|---|---|---|---|---|---|---|---|
| | | | 65 | | | | 75 | | | | 85 | | | | 95 | | | | 105 | | | | 115 | | | |
| | | | Entering Indoor Wet Bulb Temperature | | | | | | | | | | | | | | | | | | | | | | | |
| IDB | Airflow | ID WB | 59 | 63 | 67 | 71 | 59 | 63 | 67 | 71 | 59 | 63 | 67 | 71 | 59 | 63 | 67 | 71 | 59 | 63 | 67 | 71 | 59 | 63 | 67 | 71 |
| 70 | 900 | Capacity | 35,290 | 35,793 | 36,856 | – | 34,971 | 35,474 | 36,538 | – | 34,041 | 34,544 | 35,608 | – | 32,441 | 32,944 | 34,008 | – | 30,486 | 30,989 | 32,053 | – | 28,701 | 29,204 | 30,268 | – |
| | | S/T | 0.52 | 0.45 | 0.32 | – | 0.53 | 0.45 | 0.32 | – | 0.55 | 0.48 | 0.35 | – | 0.57 | 0.50 | 0.37 | – | 1.00 | 0.52 | 0.39 | – | 1.00 | 0.57 | 0.44 | – |
| | | Evap dT | 21.99 | 20.06 | 16.46 | – | 21.94 | 20.01 | 16.41 | – | 22.21 | 20.28 | 16.68 | – | 21.92 | 19.99 | 16.39 | – | 21.66 | 19.73 | 16.13 | – | 22.87 | 20.94 | 17.34 | – |
| | | Pr Suc | 123 | 124 | 127 | – | 130 | 132 | 135 | – | 137 | 138 | 141 | – | 142 | 144 | 147 | – | 148 | 149 | 153 | – | 155 | 156 | 159 | – |
| | | Pr Dis | 254 | 255 | 257 | – | 294 | 295 | 297 | – | 337 | 338 | 339 | – | 382 | 383 | 385 | – | 431 | 432 | 434 | – | 484 | 485 | 486 | – |
| | | TotalPower | 2,136 | 2,134 | 2,129 | – | 2,393 | 2,391 | 2,387 | – | 2,681 | 2,679 | 2,675 | – | 2,993 | 2,991 | 2,986 | – | 3,341 | 3,339 | 3,334 | – | 3,749 | 3,747 | 3,742 | – |
| | 1160 | Capacity | 36,076 | 36,579 | 37,643 | – | 35,758 | 36,260 | 37,324 | – | 34,828 | 35,331 | 36,394 | – | 33,228 | 33,731 | 34,795 | – | 31,273 | 31,776 | 32,839 | – | 29,488 | 29,991 | 31,055 | – |
| | | S/T | 0.65 | 0.57 | 0.44 | – | 0.66 | 0.58 | 0.45 | – | 0.68 | 0.61 | 0.47 | – | 1.00 | 0.62 | 0.49 | – | 1.00 | 0.65 | 0.51 | – | 1.00 | 0.70 | 0.56 | – |
| | | Evap dT | 19.69 | 17.76 | 14.16 | – | 19.64 | 17.71 | 14.11 | – | 19.91 | 17.98 | 14.38 | – | 19.62 | 17.69 | 14.09 | – | 19.36 | 17.43 | 13.83 | – | 20.57 | 18.64 | 15.04 | – |
| | | Pr Suc | 126 | 127 | 131 | – | 133 | 135 | 138 | – | 140 | 142 | 145 | – | 146 | 147 | 150 | – | 151 | 153 | 156 | – | 158 | 159 | 163 | – |
| | | Pr Dis | 258 | 259 | 261 | – | 298 | 299 | 301 | – | 341 | 342 | 344 | – | 386 | 387 | 389 | – | 435 | 436 | 438 | – | 488 | 489 | 491 | – |
| | | TotalPower | 2,162 | 2,160 | 2,156 | – | 2,420 | 2,418 | 2,413 | – | 2,708 | 2,706 | 2,701 | – | 3,019 | 3,017 | 3,013 | – | 3,367 | 3,365 | 3,361 | – | 3,775 | 3,773 | 3,769 | – |
| | 1350 | Capacity | 36,835 | 37,337 | 38,401 | – | 36,516 | 37,019 | 38,082 | – | 35,586 | 36,089 | 37,153 | – | 33,986 | 34,489 | 35,553 | – | 32,031 | 32,534 | 33,598 | – | 30,246 | 30,749 | 31,813 | – |
| | | S/T | 0.69 | 0.61 | 0.48 | – | 0.69 | 0.62 | 0.49 | – | 0.72 | 0.64 | 0.51 | – | 1.00 | 0.66 | 0.53 | – | 1.00 | 0.68 | 0.55 | – | 1.00 | 0.73 | 0.60 | – |
| | | Evap dT | 18.43 | 16.50 | 12.90 | – | 18.38 | 16.45 | 12.85 | – | 18.65 | 16.72 | 13.12 | – | 18.36 | 16.43 | 12.83 | – | 18.10 | 16.17 | 12.57 | – | 19.31 | 17.38 | 13.78 | – |
| | | Pr Suc | 129 | 130 | 133 | – | 136 | 138 | 141 | – | 143 | 144 | 147 | – | 148 | 150 | 153 | – | 154 | 155 | 158 | – | 161 | 162 | 165 | – |
| | | Pr Dis | 261 | 262 | 264 | – | 301 | 302 | 304 | – | 343 | 344 | 346 | – | 389 | 390 | 392 | – | 438 | 439 | 441 | – | 490 | 491 | 493 | – |
| | | TotalPower | 2,176 | 2,174 | 2,170 | – | 2,434 | 2,432 | 2,428 | – | 2,722 | 2,720 | 2,716 | – | 3,033 | 3,031 | 3,027 | – | 3,381 | 3,379 | 3,375 | – | 3,790 | 3,788 | 3,783 | – |
| 75 | 900 | Capacity | 35,311 | 35,813 | 36,877 | 38,502 | 34,992 | 35,495 | 36,558 | 38,183 | 34,062 | 34,565 | 35,629 | 37,253 | 32,462 | 32,965 | 34,029 | 35,654 | 30,507 | 31,010 | 32,074 | 33,699 | 28,722 | 29,225 | 30,289 | 31,914 |
| | | S/T | 0.65 | 0.57 | 0.44 | 0.30 | 0.65 | 0.58 | 0.45 | 0.31 | 1.00 | 0.60 | 0.47 | 0.33 | 1.00 | 0.62 | 0.49 | 0.35 | 1.00 | 0.64 | 0.51 | 0.37 | 1.00 | 1.00 | 0.56 | 0.42 |
| | | Evap dT | 26.23 | 24.30 | 20.70 | 16.97 | 26.18 | 24.25 | 20.65 | 16.92 | 26.45 | 24.52 | 20.92 | 17.19 | 26.16 | 24.23 | 20.63 | 16.90 | 25.90 | 23.97 | 20.37 | 16.64 | 27.11 | 25.18 | 21.58 | 17.85 |
| | | Pr Suc | 123 | 124 | 127 | 133 | 130 | 132 | 135 | 140 | 137 | 138 | 141 | 147 | 142 | 144 | 147 | 152 | 148 | 149 | 153 | 158 | 155 | 156 | 159 | 165 |
| | | Pr Dis | 254 | 255 | 257 | 261 | 294 | 296 | 297 | 302 | 337 | 338 | 340 | 344 | 382 | 383 | 385 | 390 | 431 | 432 | 434 | 439 | 484 | 485 | 487 | 491 |
| | | TotalPower | 2,134 | 2,132 | 2,128 | 2,147 | 2,392 | 2,390 | 2,385 | 2,405 | 2,680 | 2,678 | 2,673 | 2,693 | 2,991 | 2,989 | 2,985 | 3,004 | 3,339 | 3,337 | 3,332 | 3,352 | 3,747 | 3,745 | 3,741 | 3,760 |
| | 1160 | Capacity | 36,097 | 36,600 | 37,664 | 39,289 | 35,778 | 36,281 | 37,345 | 38,970 | 34,848 | 35,351 | 36,415 | 38,040 | 33,249 | **33,752** | 34,815 | 36,440 | 31,294 | 31,796 | 32,860 | 34,485 | 29,509 | 30,012 | 31,075 | 32,700 |
| | | S/T | 0.77 | 0.70 | 0.57 | 0.43 | 1.00 | 0.71 | 0.57 | 0.44 | 1.00 | 0.73 | 0.60 | 0.46 | 1.00 | **0.75** | 0.62 | 0.48 | 1.00 | 0.77 | 0.64 | 0.50 | 1.00 | 1.00 | 0.69 | 0.55 |
| | | Evap dT | 23.93 | 22.01 | 18.40 | 14.67 | 23.88 | 21.95 | 18.35 | 14.62 | 24.15 | 22.22 | 18.62 | 14.89 | 23.86 | **21.93** | 18.33 | 14.60 | 23.60 | 21.67 | 18.07 | 14.34 | 24.81 | 22.88 | 19.28 | 15.55 |
| | | Pr Suc | 126 | 127 | 131 | 136 | 133 | 135 | 138 | 143 | 140 | 142 | 145 | 150 | 146 | **147** | 150 | 156 | 151 | 153 | 156 | 161 | 158 | 159 | 163 | 168 |
| | | Pr Dis | 258 | 259 | 261 | 266 | 299 | 300 | 301 | 306 | 341 | 342 | 344 | 348 | 386 | **387** | 389 | 394 | 435 | 437 | 438 | 443 | 488 | 489 | 491 | 495 |
| | | TotalPower | 2,160 | 2,158 | 2,154 | 2,174 | 2,418 | 2,416 | 2,412 | 2,431 | 2,706 | 2,704 | 2,699 | 2,719 | 3,017 | **3,015** | 3,011 | 3,031 | 3,365 | 3,363 | 3,359 | 3,379 | 3,773 | 3,771 | 3,767 | 3,787 |
| | 1350 | Capacity | 36,855 | 37,358 | 38,422 | 40,047 | 36,537 | 37,040 | 38,103 | 39,728 | 35,607 | 36,110 | 37,173 | 38,798 | 34,007 | 34,510 | 35,574 | 37,198 | 32,052 | 32,555 | 33,619 | 35,243 | 30,267 | 30,770 | 31,834 | 33,458 |
| | | S/T | 0.81 | 0.74 | 0.61 | 0.47 | 1.00 | 0.75 | 0.61 | 0.47 | 1.00 | 0.77 | 0.64 | 0.50 | 1.00 | 0.79 | 0.66 | 0.52 | 1.00 | 1.00 | 0.68 | 0.54 | 1.00 | 1.00 | 0.73 | 0.59 |
| | | Evap dT | 22.67 | 20.74 | 17.14 | 13.41 | 22.62 | 20.69 | 17.09 | 13.36 | 22.89 | 20.96 | 17.36 | 13.63 | 22.60 | 20.67 | 17.07 | 13.34 | 22.34 | 20.41 | 16.81 | 13.08 | 23.55 | 21.62 | 18.02 | 14.29 |
| | | Pr Suc | 129 | 130 | 133 | 139 | 136 | 138 | 141 | 146 | 143 | 144 | 147 | 153 | 148 | 150 | 153 | 158 | 154 | 155 | 158 | 164 | 161 | 162 | 165 | 171 |
| | | Pr Dis | 261 | 262 | 264 | 268 | 301 | 302 | 304 | 309 | 344 | 345 | 347 | 351 | 389 | 390 | 392 | 396 | 438 | 439 | 441 | 446 | 491 | 492 | 494 | 498 |
| | | TotalPower | 2,175 | 2,173 | 2,168 | 2,188 | 2,433 | 2,431 | 2,426 | 2,446 | 2,720 | 2,718 | 2,714 | 2,734 | 3,032 | 3,030 | 3,025 | 3,045 | 3,380 | 3,378 | 3,373 | 3,393 | 3,788 | 3,786 | 3,781 | 3,801 |

IDB: Entering Indoor Dry Bulb Temperature

Shaded area reflects ACCA (TVA) conditions

kW = Total system power

High and low pressures are measured at the liquid and suction access fittings.

Amps: Unit amps (comp.+ evaporator + condenser fan motors)

Design Subcooling, 16 - 19 °F @ the liquid access fitting connection ARI 95 test conditions. Design Superheat 8 - 12°F @ the compressor suction access fitting connection.

| | | | Outdoor Ambient Temperature | | | | | | | | | | | | | | | | | | | | | | | |
|---|---|---|---|---|---|---|---|---|---|---|---|---|---|---|---|---|---|---|---|---|---|---|---|---|---|---|
| | | | 65 | | | | 75 | | | | 85 | | | | 95 | | | | 105 | | | | 115 | | | |
| | | | Entering Indoor Wet Bulb Temperature | | | | | | | | | | | | | | | | | | | | | | | |
| IDB | Airflow | ID WB | 59 | 63 | 67 | 71 | 59 | 63 | 67 | 71 | 59 | 63 | 67 | 71 | 59 | 63 | 67 | 71 | 59 | 63 | 67 | 71 | 59 | 63 | 67 | 71 |
| 80 | 900 | Capacity | 35,495 | 35,998 | 37,062 | 38,687 | 35,176 | 35,679 | 36,743 | 38,368 | 34,246 | 34,749 | 35,813 | 37,438 | 32,647 | 33,150 | 34,213 | 35,838 | 30,692 | 31,195 | 32,258 | 33,883 | 28,907 | 29,410 | 30,473 | 32,098 |
| | | S/T | 1.00 | 0.70 | 0.56 | 0.42 | 1.00 | 0.70 | 0.57 | 0.43 | 1.00 | 0.73 | 0.59 | 0.45 | 1.00 | 0.75 | 0.61 | 0.47 | 1.00 | 1.00 | 0.63 | 0.50 | 1.00 | 1.00 | 0.68 | 0.55 |
| | | Evap dT | 30.50 | 28.57 | 24.97 | 21.24 | 30.45 | 28.52 | 24.92 | 21.19 | 30.72 | 28.79 | 25.19 | 21.46 | 30.43 | 28.50 | 24.90 | 21.17 | 30.17 | 28.24 | 24.64 | 20.91 | 31.38 | 29.45 | 25.85 | 22.12 |
| | | Pr Suc | 123 | 125 | 128 | 133 | 131 | 132 | 135 | 141 | 137 | 139 | 142 | 147 | 143 | 144 | 148 | 153 | 148 | 150 | 153 | 158 | 155 | 157 | 160 | 165 |
| | | Pr Dis | 255 | 256 | 258 | 262 | 295 | 296 | 298 | 302 | 337 | 338 | 340 | 345 | 383 | 384 | 386 | 390 | 432 | 433 | 435 | 439 | 484 | 485 | 487 | 492 |
| | | TotalPower | 2,135 | 2,133 | 2,129 | 2,149 | 2,393 | 2,391 | 2,387 | 2,406 | 2,681 | 2,679 | 2,674 | 2,694 | 2,992 | 2,990 | 2,986 | 3,006 | 3,340 | 3,338 | 3,334 | 3,354 | 3,748 | 3,746 | 3,742 | 3,762 |
| | 1160 | Capacity | 36,281 | 36,784 | 37,848 | 39,473 | 35,963 | 36,466 | 37,529 | 39,154 | 35,033 | 35,536 | 36,600 | 38,224 | 33,433 | 33,936 | **35,000** | 36,625 | 31,478 | 31,981 | 33,045 | 34,670 | 29,693 | 30,196 | 31,260 | 32,885 |
| | | S/T | 1.00 | 0.82 | 0.69 | 0.55 | 1.00 | 0.83 | 0.70 | 0.56 | 1.00 | 0.85 | 0.72 | 0.58 | 1.00 | 1.00 | **0.74** | 0.60 | 1.00 | 1.00 | 0.76 | 0.62 | 1.00 | 1.00 | 0.81 | 0.67 |
| | | Evap dT | 28.20 | 26.28 | 22.67 | 18.94 | 28.15 | 26.22 | 22.62 | 18.89 | 28.42 | 26.49 | 22.89 | 19.16 | 28.13 | 26.20 | **22.60** | 18.87 | 27.87 | 25.95 | 22.34 | 18.61 | 29.08 | 27.15 | 23.55 | 19.82 |
| | | Pr Suc | 126 | 128 | 131 | 136 | 134 | 135 | 139 | 144 | 141 | 142 | 145 | 151 | 146 | 148 | **151** | 156 | 152 | 153 | 156 | 162 | 158 | 160 | 163 | 168 |
| | | Pr Dis | 259 | 260 | 262 | 266 | 299 | 300 | 302 | 306 | 341 | 342 | 344 | 349 | 387 | 388 | **390** | 394 | 436 | 437 | 439 | 443 | 488 | 489 | 491 | 496 |
| | | TotalPower | 2,162 | 2,160 | 2,155 | 2,175 | 2,420 | 2,417 | 2,413 | 2,433 | 2,707 | 2,705 | 2,701 | 2,721 | 3,019 | 3,017 | **3,012** | 3,032 | 3,367 | 3,365 | 3,360 | 3,380 | 3,775 | 3,773 | 3,768 | 3,788 |
| | 1350 | Capacity | 37,040 | 37,543 | 38,606 | 40,231 | 36,721 | 37,224 | 38,288 | 39,913 | 35,791 | 36,294 | 37,358 | 38,983 | 34,191 | 34,694 | 35,758 | 37,383 | 32,236 | 32,739 | 33,803 | 35,428 | 30,451 | 30,954 | 32,018 | 33,643 |
| | | S/T | 1.00 | 0.86 | 0.73 | 0.59 | 1.00 | 0.87 | 0.74 | 0.60 | 1.00 | 0.89 | 0.76 | 0.62 | 1.00 | 1.00 | 0.78 | 0.64 | 1.00 | 1.00 | 0.80 | 0.66 | 1.00 | 1.00 | 0.85 | 0.71 |
| | | Evap dT | 26.94 | 25.01 | 21.41 | 17.68 | 26.89 | 24.96 | 21.36 | 17.63 | 27.16 | 25.23 | 21.63 | 17.90 | 26.87 | 24.94 | 21.34 | 17.61 | 26.61 | 24.68 | 21.08 | 17.35 | 27.82 | 25.89 | 22.29 | 18.56 |
| | | Pr Suc | 129 | 131 | 134 | 139 | 137 | 138 | 141 | 147 | 143 | 145 | 148 | 153 | 149 | 150 | 154 | 159 | 154 | 156 | 159 | 164 | 161 | 163 | 166 | 171 |
| | | Pr Dis | 261 | 263 | 264 | 269 | 302 | 303 | 305 | 309 | 344 | 345 | 347 | 351 | 390 | 391 | 393 | 397 | 439 | 440 | 442 | 446 | 491 | 492 | 494 | 498 |
| | | TotalPower | 2,176 | 2,174 | 2,170 | 2,189 | 2,434 | 2,432 | 2,427 | 2,447 | 2,722 | 2,720 | 2,715 | 2,735 | 3,033 | 3,031 | 3,027 | 3,046 | 3,381 | 3,379 | 3,375 | 3,394 | 3,789 | 3,787 | 3,783 | 3,803 |
| 85 | 900 | Capacity | 36,095 | 36,598 | 37,662 | 39,287 | 35,776 | 36,279 | 37,343 | 38,968 | 34,846 | 35,349 | 36,413 | 38,038 | 33,247 | 33,750 | 34,813 | 36,438 | 31,292 | 31,794 | 32,858 | 34,483 | 29,507 | 30,010 | 31,073 | 32,698 |
| | | S/T | 1.00 | 0.79 | 0.66 | 0.52 | 1.00 | 0.80 | 0.67 | 0.53 | 1.00 | 1.00 | 0.69 | 0.55 | 1.00 | 1.00 | 0.71 | 0.57 | 1.00 | 1.00 | 0.73 | 0.59 | 1.00 | 1.00 | 1.00 | 0.64 |
| | | Evap dT | 34.29 | 32.36 | 28.76 | 25.03 | 34.24 | 32.31 | 28.70 | 24.97 | 34.51 | 32.58 | 28.98 | 25.24 | 34.22 | 32.29 | 28.68 | 24.95 | 33.96 | 32.03 | 28.43 | 24.70 | 35.17 | 33.24 | 29.63 | 25.90 |
| | | Pr Suc | 125 | 127 | 130 | 135 | 133 | 134 | 137 | 143 | 139 | 141 | 144 | 149 | 145 | 146 | 149 | 155 | 150 | 152 | 155 | 160 | 157 | 159 | 162 | 167 |
| | | Pr Dis | 256 | 257 | 259 | 263 | 296 | 297 | 299 | 304 | 338 | 340 | 341 | 346 | 384 | 385 | 387 | 391 | 433 | 434 | 436 | 440 | 485 | 487 | 488 | 493 |
| | | TotalPower | 2,140 | 2,138 | 2,134 | 2,154 | 2,398 | 2,396 | 2,392 | 2,411 | 2,686 | 2,684 | 2,679 | 2,699 | 2,997 | 2,995 | 2,991 | 3,011 | 3,345 | 3,343 | 3,339 | 3,358 | 3,753 | 3,751 | 3,747 | 3,767 |
| | 1160 | Capacity | 36,881 | 37,384 | 38,448 | 40,073 | 36,563 | 37,066 | 38,129 | 39,754 | 35,633 | 36,136 | 37,200 | 38,824 | 34,033 | 34,536 | 35,600 | 37,225 | 32,078 | 32,581 | 33,645 | 35,270 | 30,293 | 30,796 | 31,860 | 33,485 |
| | | S/T | 1.00 | 0.92 | 0.79 | 0.65 | 1.00 | 1.00 | 0.80 | 0.66 | 1.00 | 1.00 | 0.82 | 0.68 | 1.00 | 1.00 | 0.84 | 0.70 | 1.00 | 1.00 | 0.86 | 0.72 | 1.000 | 1.000 | 1.000 | 0.771 |
| | | Evap dT | 31.99 | 30.06 | 26.46 | 22.73 | 31.94 | 30.01 | 26.41 | 22.68 | 32.21 | 30.28 | 26.68 | 22.95 | 31.92 | 29.99 | 26.39 | 22.66 | 31.66 | 29.73 | 26.13 | 22.40 | 32.87 | 30.94 | 27.34 | 23.61 |
| | | Pr Suc | 128 | 130 | 133 | 138 | 136 | 137 | 141 | 146 | 142 | 144 | 147 | 152 | 148 | 150 | 153 | 158 | 153 | 155 | 158 | 163 | 160 | 162 | 165 | 170 |
| | | Pr Dis | 260 | 261 | 263 | 267 | 300 | 301 | 303 | 308 | 342 | 344 | 345 | 350 | 388 | 389 | 391 | 395 | 437 | 438 | 440 | 444 | 490 | 491 | 492 | 497 |
| | | TotalPower | 2,167 | 2,165 | 2,160 | 2,180 | 2,424 | 2,422 | 2,418 | 2,438 | 2,712 | 2,710 | 2,706 | 2,726 | 3,024 | 3,022 | 3,017 | 3,037 | 3,372 | 3,370 | 3,365 | 3,385 | 3,780 | 3,778 | 3,773 | 3,793 |
| | 1350 | Capacity | 37,640 | 38,143 | 39,206 | 40,831 | 37,321 | 37,824 | 38,888 | 40,513 | 36,391 | 36,894 | 37,958 | 39,583 | 34,791 | 35,294 | 36,358 | 37,983 | 32,836 | 33,339 | 34,403 | 36,028 | 31,051 | 31,554 | 32,618 | 34,243 |
| | | S/T | 1.00 | 0.96 | 0.83 | 0.69 | 1.00 | 1.00 | 0.83 | 0.69 | 1.00 | 1.00 | 0.86 | 0.72 | 1.00 | 1.00 | 0.88 | 0.74 | 1.00 | 1.00 | 1.00 | 0.76 | 1.00 | 1.00 | 1.00 | 0.81 |
| | | Evap dT | 30.73 | 28.80 | 25.20 | 21.47 | 30.68 | 28.75 | 25.15 | 21.42 | 30.95 | 29.02 | 25.42 | 21.69 | 30.66 | 28.73 | 25.13 | 21.40 | 30.40 | 28.47 | 24.87 | 21.14 | 31.61 | 29.68 | 26.08 | 22.35 |
| | | Pr Suc | 131 | 133 | 136 | 141 | 139 | 140 | 143 | 148 | 145 | 147 | 150 | 155 | 151 | 152 | 155 | 161 | 156 | 158 | 161 | 166 | 163 | 165 | 168 | 173 |
| | | Pr Dis | 263 | 264 | 266 | 270 | 303 | 304 | 306 | 310 | 345 | 346 | 348 | 353 | 391 | 392 | 394 | 398 | 440 | 441 | 443 | 447 | 492 | 493 | 495 | 500 |
| | | TotalPower | 2,181 | 2,179 | 2,175 | 2,194 | 2,439 | 2,437 | 2,432 | 2,452 | 2,727 | 2,725 | 2,720 | 2,740 | 3,038 | 3,036 | 3,032 | 3,051 | 3,386 | 3,384 | 3,380 | 3,399 | 3,794 | 3,792 | 3,788 | 3,807 |

**IDB: Entering Indoor Dry Bulb Temperature** Shaded area reflects AHRI (TVA) conditions **kW = Total system power**

**High and low pressures are measured at the liquid and suction access fittings.** **Amps: Unit amps (comp.+ evaporator + condenser fan motors)**

**Design Subcooling, 16 - 19 °F @ the liquid access fitting connection ARI 95 test conditions. Design Superheat 8 - 12°F @ the compressor suction access fitting connection.**

| | | | Outdoor Ambient Temperature | | | | | | | | | | | | | | | | | | | | | | | |
|---|---|---|---|---|---|---|---|---|---|---|---|---|---|---|---|---|---|---|---|---|---|---|---|---|---|---|
| | | | 65 | | | | 75 | | | | 85 | | | | 95 | | | | 105 | | | | 115 | | | |
| | | | Entering Indoor Wet Bulb Temperature | | | | | | | | | | | | | | | | | | | | | | | |
| IDB | Airflow | ID WB | 59 | 63 | 67 | 71 | 59 | 63 | 67 | 71 | 59 | 63 | 67 | 71 | 59 | 63 | 67 | 71 | 59 | 63 | 67 | 71 | 59 | 63 | 67 | 71 |
| 70 | 900 | Capacity | 35,290 | 35,793 | 36,856 | - | 34,971 | 35,474 | 36,538 | - | 34,041 | 34,544 | 35,608 | - | 32,441 | 32,944 | 34,008 | - | 30,486 | 30,989 | 32,053 | - | 28,701 | 29,204 | 30,268 | - |
| | | S/T | 0.52 | 0.45 | 0.32 | - | 0.53 | 0.45 | 0.32 | - | 0.55 | 0.48 | 0.35 | - | 0.57 | 0.50 | 0.37 | - | 1.00 | 0.52 | 0.39 | - | 1.00 | 0.57 | 0.44 | - |
| | | Evap dT | 21.99 | 20.06 | 16.46 | - | 21.94 | 20.01 | 16.41 | - | 22.21 | 20.28 | 16.68 | - | 21.92 | 19.99 | 16.39 | - | 21.66 | 19.73 | 16.13 | - | 22.87 | 20.94 | 17.34 | - |
| | | Pr Suc | 123 | 124 | 127 | - | 130 | 132 | 135 | - | 137 | 138 | 141 | - | 142 | 144 | 147 | - | 148 | 149 | 153 | - | 155 | 156 | 159 | - |
| | | Pr Dis | 254 | 255 | 257 | - | 294 | 295 | 297 | - | 337 | 338 | 339 | - | 382 | 383 | 385 | - | 431 | 432 | 434 | - | 484 | 485 | 486 | - |
| | 1160 | Capacity | 36,076 | 36,579 | 37,643 | - | 35,758 | 36,260 | 37,324 | - | 34,828 | 35,331 | 36,394 | - | 33,228 | 33,731 | 34,795 | - | 31,273 | 31,776 | 32,839 | - | 29,488 | 29,991 | 31,055 | - |
| | | S/T | 0.65 | 0.57 | 0.44 | - | 0.66 | 0.58 | 0.45 | - | 0.68 | 0.61 | 0.47 | - | 1.00 | 0.62 | 0.49 | - | 1.00 | 0.65 | 0.51 | - | 1.00 | 0.70 | 0.56 | - |
| | | Evap dT | 19.69 | 17.76 | 14.16 | - | 19.64 | 17.71 | 14.11 | - | 19.91 | 17.98 | 14.38 | - | 19.62 | 17.69 | 14.09 | - | 19.36 | 17.43 | 13.83 | - | 20.57 | 18.64 | 15.04 | - |
| | | Pr Suc | 126 | 127 | 131 | - | 133 | 135 | 138 | - | 140 | 142 | 145 | - | 146 | 147 | 150 | - | 151 | 153 | 156 | - | 158 | 159 | 163 | - |
| | | Pr Dis | 258 | 259 | 261 | - | 298 | 299 | 301 | - | 341 | 342 | 344 | - | 386 | 387 | 389 | - | 435 | 436 | 438 | - | 488 | 489 | 491 | - |
| | 1350 | Capacity | 36,835 | 37,337 | 38,401 | - | 36,516 | 37,019 | 38,082 | - | 35,586 | 36,089 | 37,153 | - | 33,986 | 34,489 | 35,553 | - | 32,031 | 32,534 | 33,598 | - | 30,246 | 30,749 | 31,813 | - |
| | | S/T | 0.69 | 0.61 | 0.48 | - | 0.69 | 0.62 | 0.49 | - | 0.72 | 0.64 | 0.51 | - | 1.00 | 0.66 | 0.53 | - | 1.00 | 0.68 | 0.55 | - | 1.00 | 0.73 | 0.60 | - |
| | | Evap dT | 18.43 | 16.50 | 12.90 | - | 18.38 | 16.45 | 12.85 | - | 18.65 | 16.72 | 13.12 | - | 18.36 | 16.43 | 12.83 | - | 18.10 | 16.17 | 12.57 | - | 19.31 | 17.38 | 13.78 | - |
| | | Pr Suc | 129 | 130 | 133 | - | 136 | 138 | 141 | - | 143 | 144 | 147 | - | 148 | 150 | 153 | - | 154 | 155 | 158 | - | 161 | 162 | 165 | - |
| | | Pr Dis | 261 | 262 | 264 | - | 301 | 302 | 304 | - | 343 | 344 | 346 | - | 389 | 390 | 392 | - | 438 | 439 | 441 | - | 490 | 491 | 493 | - |
| 75 | 900 | Capacity | 35,311 | 35,813 | 36,877 | 38,502 | 34,992 | 35,495 | 36,558 | 38,183 | 34,062 | 34,565 | 35,629 | 37,253 | 32,462 | 32,965 | 34,029 | 35,654 | 30,507 | 31,010 | 32,074 | 33,699 | 28,722 | 29,225 | 30,289 | 31,914 |
| | | S/T | 0.65 | 0.57 | 0.44 | 0.30 | 0.65 | 0.58 | 0.45 | 0.31 | 1.00 | 0.60 | 0.47 | 0.33 | 1.00 | 0.62 | 0.49 | 0.35 | 1.00 | 0.64 | 0.51 | 0.37 | 1.00 | 1.00 | 0.56 | 0.42 |
| | | Evap dT | 26.23 | 24.30 | 20.70 | 16.97 | 26.18 | 24.25 | 20.65 | 16.92 | 26.45 | 24.52 | 20.92 | 17.19 | 26.16 | 24.23 | 20.63 | 16.90 | 25.90 | 23.97 | 20.37 | 16.64 | 27.11 | 25.18 | 21.58 | 17.85 |
| | | Pr Suc | 123 | 124 | 127 | 133 | 130 | 132 | 135 | 140 | 137 | 138 | 141 | 147 | 142 | 144 | 147 | 152 | 148 | 149 | 153 | 158 | 155 | 156 | 159 | 165 |
| | | Pr Dis | 254 | 255 | 257 | 261 | 294 | 296 | 297 | 302 | 337 | 338 | 340 | 344 | 382 | 383 | 385 | 390 | 431 | 432 | 434 | 439 | 484 | 485 | 487 | 491 |
| | 1160 | Capacity | 36,097 | 36,600 | 37,664 | 39,289 | 35,778 | 36,281 | 37,345 | 38,970 | 34,848 | 35,351 | 36,415 | 38,040 | 33,249 | **33,752** | 34,815 | 36,440 | 31,294 | 31,796 | 32,860 | 34,485 | 29,509 | 30,012 | 31,075 | 32,700 |
| | | S/T | 0.77 | 0.70 | 0.57 | 0.43 | 1.00 | 0.71 | 0.57 | 0.44 | 1.00 | 0.73 | 0.60 | 0.46 | 1.00 | **0.75** | 0.62 | 0.48 | 1.00 | 0.77 | 0.64 | 0.50 | 1.00 | 1.00 | 0.69 | 0.55 |
| | | Evap dT | 23.93 | 22.01 | 18.40 | 14.67 | 23.88 | 21.95 | 18.35 | 14.62 | 24.15 | 22.22 | 18.62 | 14.89 | 23.86 | **21.93** | 18.33 | 14.60 | 23.60 | 21.67 | 18.07 | 14.34 | 24.81 | 22.88 | 19.28 | 15.55 |
| | | Pr Suc | 126 | 127 | 131 | 136 | 133 | 135 | 138 | 143 | 140 | 142 | 145 | 150 | 146 | **147** | 150 | 156 | 151 | 153 | 156 | 161 | 158 | 159 | 163 | 168 |
| | | Pr Dis | 258 | 259 | 261 | 266 | 299 | 300 | 301 | 306 | 341 | 342 | 344 | 348 | 386 | **387** | 389 | 394 | 435 | 437 | 438 | 443 | 488 | 489 | 491 | 495 |
| | 1350 | Capacity | 36,855 | 37,358 | 38,422 | 40,047 | 36,537 | 37,040 | 38,103 | 39,728 | 35,607 | 36,110 | 37,173 | 38,798 | 34,007 | 34,510 | 35,574 | 37,198 | 32,052 | 32,555 | 33,619 | 35,243 | 30,267 | 30,770 | 31,834 | 33,458 |
| | | S/T | 0.81 | 0.74 | 0.61 | 0.47 | 1.00 | 0.75 | 0.61 | 0.47 | 1.00 | 0.77 | 0.64 | 0.50 | 1.00 | 0.79 | 0.66 | 0.52 | 1.00 | 1.00 | 0.68 | 0.54 | 1.00 | 1.00 | 0.73 | 0.59 |
| | | Evap dT | 22.67 | 20.74 | 17.14 | 13.41 | 22.62 | 20.69 | 17.09 | 13.36 | 22.89 | 20.96 | 17.36 | 13.63 | 22.60 | 20.67 | 17.07 | 13.34 | 22.34 | 20.41 | 16.81 | 13.08 | 23.55 | 21.62 | 18.02 | 14.29 |
| | | Pr Suc | 129 | 130 | 133 | 139 | 136 | 138 | 141 | 146 | 143 | 144 | 147 | 153 | 148 | 150 | 153 | 158 | 154 | 155 | 158 | 164 | 161 | 162 | 165 | 171 |
| | | Pr Dis | 261 | 262 | 264 | 268 | 301 | 302 | 304 | 309 | 344 | 345 | 347 | 351 | 389 | 390 | 392 | 396 | 438 | 439 | 441 | 446 | 491 | 492 | 494 | 498 |

IDB: Entering Indoor Dry Bulb Temperature

Shaded area reflects ACCA (TVA) conditions

kW = Total system power

High and low pressures are measured at the liquid and suction access fittings.

Amps: Unit amps (comp.+ evaporator + condenser fan motors)

Design Subcooling, 16 - 19 °F @ the liquid access fitting connection ARI 95 test conditions. Design Superheat 8 - 12°F @ the compressor suction access fitting connection.

| | | | Outdoor Ambient Temperature | | | | | | | | | | | | | | | | | | | | | | | |
|---|---|---|---|---|---|---|---|---|---|---|---|---|---|---|---|---|---|---|---|---|---|---|---|---|---|---|
| | | | 65 | | | | 75 | | | | 85 | | | | 95 | | | | 105 | | | | 115 | | | |
| | | | Entering Indoor Wet Bulb Temperature | | | | | | | | | | | | | | | | | | | | | | | |
| IDB | Airflow | ID WB | 59 | 63 | 67 | 71 | 59 | 63 | 67 | 71 | 59 | 63 | 67 | 71 | 59 | 63 | 67 | 71 | 59 | 63 | 67 | 71 | 59 | 63 | 67 | 71 |
| 70 | 900 | Capacity | 35,495 | 35,998 | 37,062 | 38,687 | 35,176 | 35,679 | 36,743 | 38,368 | 34,246 | 34,749 | 35,813 | 37,438 | 32,647 | 33,150 | 34,213 | 35,838 | 30,692 | 31,195 | 32,258 | 33,883 | 28,907 | 29,410 | 30,473 | 32,098 |
| | | S/T | 1.00 | 0.70 | 0.56 | 0.42 | 1.00 | 0.70 | 0.57 | 0.43 | 1.00 | 0.73 | 0.59 | 0.45 | 1.00 | 0.75 | 0.61 | 0.47 | 1.00 | 1.00 | 0.63 | 0.50 | 1.00 | 1.00 | 0.68 | 0.55 |
| | | Evap dT | 30.50 | 28.57 | 24.97 | 21.24 | 30.45 | 28.52 | 24.92 | 21.19 | 30.72 | 28.79 | 25.19 | 21.46 | 30.43 | 28.50 | 24.90 | 21.17 | 30.17 | 28.24 | 24.64 | 20.91 | 31.38 | 29.45 | 25.85 | 22.12 |
| | | Pr Suc | 123 | 125 | 128 | 133 | 131 | 132 | 135 | 141 | 137 | 139 | 142 | 147 | 143 | 144 | 148 | 153 | 148 | 150 | 153 | 158 | 155 | 157 | 160 | 165 |
| | | Pr Dis | 255 | 256 | 258 | 262 | 295 | 296 | 298 | 302 | 337 | 338 | 340 | 345 | 383 | 384 | 386 | 390 | 432 | 433 | 435 | 439 | 484 | 485 | 487 | 492 |
| | 1160 | Capacity | 36,281 | 36,784 | 37,848 | 39,473 | 35,963 | 36,466 | 37,529 | 39,154 | 35,033 | 35,536 | 36,600 | 38,224 | 33,433 | 33,936 | **35,000** | 36,625 | 31,478 | 31,981 | 33,045 | 34,670 | 29,693 | 30,196 | 31,260 | 32,885 |
| | | S/T | 1.00 | 0.82 | 0.69 | 0.55 | 1.00 | 0.83 | 0.70 | 0.56 | 1.00 | 0.85 | 0.72 | 0.58 | 1.00 | 1.00 | **0.74** | 0.60 | 1.00 | 1.00 | 0.76 | 0.62 | 1.00 | 1.00 | 0.81 | 0.67 |
| | | Evap dT | 28.20 | 26.28 | 22.67 | 18.94 | 28.15 | 26.22 | 22.62 | 18.89 | 28.42 | 26.49 | 22.89 | 19.16 | 28.13 | 26.20 | **22.60** | 18.87 | 27.87 | 25.95 | 22.34 | 18.61 | 29.08 | 27.15 | 23.55 | 19.82 |
| | | Pr Suc | 126 | 128 | 131 | 136 | 134 | 135 | 139 | 144 | 141 | 142 | 145 | 151 | 146 | 148 | **151** | 156 | 152 | 153 | 156 | 162 | 158 | 160 | 163 | 168 |
| | | Pr Dis | 259 | 260 | 262 | 266 | 299 | 300 | 302 | 306 | 341 | 342 | 344 | 349 | 387 | 388 | **390** | 394 | 436 | 437 | 439 | 443 | 488 | 489 | 491 | 496 |
| | 1350 | Capacity | 37,040 | 37,543 | 38,606 | 40,231 | 36,721 | 37,224 | 38,288 | 39,913 | 35,791 | 36,294 | 37,358 | 38,983 | 34,191 | 34,694 | 35,758 | 37,383 | 32,236 | 32,739 | 33,803 | 35,428 | 30,451 | 30,954 | 32,018 | 33,643 |
| | | S/T | 1.00 | 0.86 | 0.73 | 0.59 | 1.00 | 0.87 | 0.74 | 0.60 | 1.00 | 0.89 | 0.76 | 0.62 | 1.00 | 1.00 | 0.78 | 0.64 | 1.00 | 1.00 | 0.80 | 0.66 | 1.00 | 1.00 | 0.85 | 0.71 |
| | | Evap dT | 26.94 | 25.01 | 21.41 | 17.68 | 26.89 | 24.96 | 21.36 | 17.63 | 27.16 | 25.23 | 21.63 | 17.90 | 26.87 | 24.94 | 21.34 | 17.61 | 26.61 | 24.68 | 21.08 | 17.35 | 27.82 | 25.89 | 22.29 | 18.56 |
| | | Pr Suc | 129 | 131 | 134 | 139 | 137 | 138 | 141 | 147 | 143 | 145 | 148 | 153 | 149 | 150 | 154 | 159 | 154 | 156 | 159 | 164 | 161 | 163 | 166 | 171 |
| | | Pr Dis | 261 | 263 | 264 | 269 | 302 | 303 | 305 | 309 | 344 | 345 | 347 | 351 | 390 | 391 | 393 | 397 | 439 | 440 | 442 | 446 | 491 | 492 | 494 | 498 |
| 75 | 900 | Capacity | 36,095 | 36,598 | 37,662 | 39,287 | 35,776 | 36,279 | 37,343 | 38,968 | 34,846 | 35,349 | 36,413 | 38,038 | 33,247 | 33,750 | 34,813 | 36,438 | 31,292 | 31,794 | 32,858 | 34,483 | 29,507 | 30,010 | 31,073 | 32,698 |
| | | S/T | 1.00 | 0.79 | 0.66 | 0.52 | 1.00 | 0.80 | 0.67 | 0.53 | 1.00 | 1.00 | 0.69 | 0.55 | 1.00 | 1.00 | 0.71 | 0.57 | 1.00 | 1.00 | 0.73 | 0.59 | 1.00 | 1.00 | 1.00 | 0.64 |
| | | Evap dT | 34.29 | 32.36 | 28.76 | 25.03 | 34.24 | 32.31 | 28.70 | 24.97 | 34.51 | 32.58 | 28.98 | 25.24 | 34.22 | 32.29 | 28.68 | 24.95 | 33.96 | 32.03 | 28.43 | 24.70 | 35.17 | 33.24 | 29.63 | 25.90 |
| | | Pr Suc | 125 | 127 | 130 | 135 | 133 | 134 | 137 | 143 | 139 | 141 | 144 | 149 | 145 | 146 | 149 | 155 | 150 | 152 | 155 | 160 | 157 | 159 | 162 | 167 |
| | | Pr Dis | 256 | 257 | 259 | 263 | 296 | 297 | 299 | 304 | 338 | 340 | 341 | 346 | 384 | 385 | 387 | 391 | 433 | 434 | 436 | 440 | 485 | 487 | 488 | 493 |
| | 1160 | Capacity | 36,881 | 37,384 | 38,448 | 40,073 | 36,563 | 37,066 | 38,129 | 39,754 | 35,633 | 36,136 | 37,200 | 38,824 | 34,033 | 34,536 | 35,600 | 37,225 | 32,078 | 32,581 | 33,645 | 35,270 | 30,293 | 30,796 | 31,860 | 33,485 |
| | | S/T | 1.00 | 0.92 | 0.79 | 0.65 | 1.00 | 1.00 | 0.80 | 0.66 | 1.00 | 1.00 | 0.82 | 0.68 | 1.00 | 1.00 | 0.84 | 0.70 | 1.00 | 1.00 | 0.86 | 0.72 | 1.000 | 1.000 | 1.000 | 0.771 |
| | | Evap dT | 31.99 | 30.06 | 26.46 | 22.73 | 31.94 | 30.01 | 26.41 | 22.68 | 32.21 | 30.28 | 26.68 | 22.95 | 31.92 | 29.99 | 26.39 | 22.66 | 31.66 | 29.73 | 26.13 | 22.40 | 32.87 | 30.94 | 27.34 | 23.61 |
| | | Pr Suc | 128 | 130 | 133 | 138 | 136 | 137 | 141 | 146 | 142 | 144 | 147 | 152 | 148 | 150 | 153 | 158 | 153 | 155 | 158 | 163 | 160 | 162 | 165 | 170 |
| | | Pr Dis | 260 | 261 | 263 | 267 | 300 | 301 | 303 | 308 | 342 | 344 | 345 | 350 | 388 | 389 | 391 | 395 | 437 | 438 | 440 | 444 | 490 | 491 | 492 | 497 |
| | 1350 | Capacity | 37,640 | 38,143 | 39,206 | 40,831 | 37,321 | 37,824 | 38,888 | 40,513 | 36,391 | 36,894 | 37,958 | 39,583 | 34,791 | 35,294 | 36,358 | 37,983 | 32,836 | 33,339 | 34,403 | 36,028 | 31,051 | 31,554 | 32,618 | 34,243 |
| | | S/T | 1.00 | 0.96 | 0.83 | 0.69 | 1.00 | 1.00 | 0.83 | 0.69 | 1.00 | 1.00 | 0.86 | 0.72 | 1.00 | 1.00 | 0.88 | 0.74 | 1.00 | 1.00 | 1.00 | 0.76 | 1.00 | 1.00 | 1.00 | 0.81 |
| | | Evap dT | 30.73 | 28.80 | 25.20 | 21.47 | 30.68 | 28.75 | 25.15 | 21.42 | 30.95 | 29.02 | 25.42 | 21.69 | 30.66 | 28.73 | 25.13 | 21.40 | 30.40 | 28.47 | 24.87 | 21.14 | 31.61 | 29.68 | 26.08 | 22.35 |
| | | Pr Suc | 131 | 133 | 136 | 141 | 139 | 140 | 143 | 148 | 145 | 147 | 150 | 155 | 151 | 152 | 155 | 161 | 156 | 158 | 161 | 166 | 163 | 165 | 168 | 173 |
| | | Pr Dis | 263 | 264 | 266 | 270 | 303 | 304 | 306 | 310 | 345 | 346 | 348 | 353 | 391 | 392 | 394 | 398 | 440 | 441 | 443 | 447 | 492 | 493 | 495 | 500 |

**IDB: Entering Indoor Dry Bulb Temperature** Shaded area reflects ACCA (TVA) conditions **kW = Total system power**

**High and low pressures are measured at the liquid and suction access fittings.** **Amps: Unit amps (comp.+ evaporator + condenser fan motors)**

**Design Subcooling, 16 - 19 °F @ the liquid access fitting connection ARI 95 test conditions. Design Superheat 8 - 12°F @ the compressor suction access fitting connection.**

| | | | Outdoor Ambient Temperature | | | | | | | | | | | | | | | | | | | | | | | |
|---|---|---|---|---|---|---|---|---|---|---|---|---|---|---|---|---|---|---|---|---|---|---|---|---|---|---|
| | | | 65 | | | | 75 | | | | 85 | | | | 95 | | | | 105 | | | | 115 | | | |
| | | | Entering Indoor Wet Bulb Temperature | | | | | | | | | | | | | | | | | | | | | | | |
| IDB | Airflow | ID WB | 59 | 63 | 67 | 71 | 59 | 63 | 67 | 71 | 59 | 63 | 67 | 71 | 59 | 63 | 67 | 71 | 59 | 63 | 67 | 71 | 59 | 63 | 67 | 71 |
| 70 | 900 | Capacity | 47,052 | 47,720 | 49,133 | - | 46,628 | 47,296 | 48,710 | - | 45,393 | 46,061 | 47,474 | - | 43,267 | 43,936 | 45,349 | - | 40,670 | 41,338 | 42,751 | - | 38,299 | 38,967 | 40,380 | - |
| | | S/T | 0.56 | 0.48 | 0.35 | - | 0.56 | 0.49 | 0.35 | - | 0.59 | 0.51 | 0.38 | - | 0.61 | 0.53 | 0.40 | - | 1.00 | 0.55 | 0.42 | - | 1.00 | 0.60 | 0.47 | - |
| | | Evap dT | 21.50 | 19.57 | 15.97 | - | 21.45 | 19.52 | 15.92 | - | 21.72 | 19.79 | 16.19 | - | 21.43 | 19.50 | 15.90 | - | 21.17 | 19.24 | 15.64 | - | 22.38 | 20.45 | 16.85 | - |
| | | Pr Suc | 121 | 123 | 126 | - | 129 | 130 | 133 | - | 135 | 137 | 140 | - | 141 | 142 | 145 | - | 146 | 148 | 151 | - | 153 | 154 | 158 | - |
| | | Pr Dis | 257 | 258 | 260 | - | 298 | 299 | 301 | - | 341 | 342 | 344 | - | 387 | 388 | 390 | - | 436 | 437 | 439 | - | 489 | 490 | 492 | - |
| | | TotalPower | 2,764 | 2,761 | 2,756 | - | 3,090 | 3,088 | 3,082 | - | 3,455 | 3,452 | 3,446 | - | 3,849 | 3,846 | 3,841 | - | 4,289 | 4,287 | 4,281 | - | 4,806 | 4,803 | 4,798 | - |
| | 1160 | Capacity | 47,930 | 48,598 | 50,011 | - | 47,506 | 48,175 | 49,588 | - | 46,271 | 46,939 | 48,352 | - | 44,146 | 44,814 | 46,227 | - | 41,548 | 42,216 | 43,630 | - | 39,177 | 39,845 | 41,258 | - |
| | | S/T | 0.65 | 0.58 | 0.45 | - | 0.66 | 0.58 | 0.45 | - | 0.68 | 0.61 | 0.48 | - | 1.00 | 0.63 | 0.49 | - | 1.00 | 0.65 | 0.52 | - | 1.00 | 0.70 | 0.57 | - |
| | | Evap dT | 19.69 | 17.76 | 14.16 | - | 19.64 | 17.71 | 14.11 | - | 19.91 | 17.98 | 14.38 | - | 19.62 | 17.69 | 14.09 | - | 19.36 | 17.43 | 13.83 | - | 20.57 | 18.64 | 15.04 | - |
| | | Pr Suc | 124 | 125 | 129 | - | 131 | 133 | 136 | - | 138 | 139 | 143 | - | 143 | 145 | 148 | - | 149 | 150 | 153 | - | 156 | 157 | 160 | - |
| | | Pr Dis | 261 | 262 | 263 | - | 301 | 302 | 304 | - | 344 | 345 | 347 | - | 390 | 391 | 393 | - | 440 | 441 | 443 | - | 493 | 494 | 495 | - |
| | | TotalPower | 2,790 | 2,788 | 2,782 | - | 3,117 | 3,114 | 3,108 | - | 3,481 | 3,478 | 3,473 | - | 3,875 | 3,872 | 3,867 | - | 4,315 | 4,313 | 4,307 | - | 4,832 | 4,830 | 4,824 | - |
| | 1350 | Capacity | 49,377 | 50,045 | 51,458 | - | 48,953 | 49,621 | 51,034 | - | 47,718 | 48,386 | 49,799 | - | 45,592 | 46,261 | 47,674 | - | 42,995 | 43,663 | 45,076 | - | 40,623 | 41,292 | 42,705 | - |
| | | S/T | 0.70 | 0.62 | 0.49 | - | 0.70 | 0.63 | 0.49 | - | 0.73 | 0.65 | 0.52 | - | 1.00 | 0.67 | 0.54 | - | 1.00 | 0.69 | 0.56 | - | 1.00 | 0.74 | 0.61 | - |
| | | Evap dT | 18.01 | 16.08 | 12.48 | - | 17.96 | 16.03 | 12.43 | - | 18.23 | 16.30 | 12.70 | - | 17.94 | 16.01 | 12.41 | - | 17.68 | 15.75 | 12.15 | - | 18.89 | 16.96 | 13.36 | - |
| | | Pr Suc | 128 | 129 | 132 | - | 135 | 137 | 140 | - | 142 | 143 | 146 | - | 147 | 149 | 152 | - | 153 | 154 | 157 | - | 159 | 161 | 164 | - |
| | | Pr Dis | 264 | 266 | 267 | - | 305 | 306 | 308 | - | 348 | 349 | 351 | - | 394 | 395 | 397 | - | 443 | 445 | 446 | - | 496 | 498 | 499 | - |
| | | TotalPower | 2,815 | 2,812 | 2,806 | - | 3,141 | 3,138 | 3,133 | - | 3,505 | 3,503 | 3,497 | - | 3,899 | 3,897 | 3,891 | - | 4,340 | 4,337 | 4,332 | - | 4,856 | 4,854 | 4,848 | - |
| 75 | 900 | Capacity | 47,079 | 47,747 | 49,161 | 51,319 | 46,656 | 47,324 | 48,737 | 50,896 | 45,420 | 46,089 | 47,502 | 49,661 | 43,295 | 43,963 | 45,376 | 47,535 | 40,698 | 41,366 | 42,779 | 44,938 | 38,326 | 38,994 | 40,408 | 42,566 |
| | | S/T | 0.68 | 0.61 | 0.47 | 0.33 | 0.69 | 0.61 | 0.48 | 0.34 | 1.00 | 0.64 | 0.51 | 0.37 | 1.00 | 0.66 | 0.52 | 0.38 | 1.00 | 0.68 | 0.55 | 0.41 | 1.00 | 0.73 | 0.60 | 0.46 |
| | | Evap dT | 25.74 | 23.81 | 20.21 | 16.48 | 25.69 | 23.76 | 20.16 | 16.43 | 25.96 | 24.03 | 20.43 | 16.70 | 25.67 | 23.74 | 20.14 | 16.41 | 25.41 | 23.48 | 19.88 | 16.15 | 26.62 | 24.69 | 21.09 | 17.36 |
| | | Pr Suc | 121 | 123 | 126 | 131 | 129 | 130 | 133 | 139 | 135 | 137 | 140 | 145 | 141 | 142 | 145 | 151 | 146 | 148 | 151 | 156 | 153 | 155 | 158 | 163 |
| | | Pr Dis | 257 | 259 | 260 | 265 | 298 | 299 | 301 | 306 | 341 | 342 | 344 | 348 | 387 | 388 | 390 | 394 | 437 | 438 | 439 | 444 | 489 | 491 | 492 | 497 |
| | | TotalPower | 2,762 | 2,759 | 2,754 | 2,779 | 3,088 | 3,086 | 3,080 | 3,105 | 3,452 | 3,450 | 3,444 | 3,469 | 3,847 | 3,844 | 3,838 | 3,863 | 4,287 | 4,284 | 4,279 | 4,304 | 4,804 | 4,801 | 4,796 | 4,821 |
| | 1160 | Capacity | 47,957 | 48,626 | 50,039 | 52,198 | 47,534 | 48,202 | 49,615 | 51,774 | 46,299 | 46,967 | 48,380 | 50,539 | 44,173 | **44,841** | 46,255 | 48,413 | 41,576 | 42,244 | 43,657 | 45,816 | 39,204 | 39,873 | 41,286 | 43,445 |
| | | S/T | 0.78 | 0.70 | 0.57 | 0.43 | 0.79 | 0.71 | 0.58 | 0.44 | 1.00 | 0.74 | 0.60 | 0.46 | 1.00 | **0.75** | 0.62 | 0.48 | 1.00 | 0.78 | 0.64 | 0.50 | 1.00 | 1.00 | 0.69 | 0.55 |
| | | Evap dT | 23.93 | 22.01 | 18.40 | 14.67 | 23.88 | 21.95 | 18.35 | 14.62 | 24.15 | 22.22 | 18.62 | 14.89 | 23.86 | **21.93** | 18.33 | 14.60 | 23.60 | 21.67 | 18.07 | 14.34 | 24.81 | 22.88 | 19.28 | 15.55 |
| | | Pr Suc | 124 | 126 | 129 | 134 | 131 | 133 | 136 | 141 | 138 | 139 | 143 | 148 | 143 | **145** | 148 | 153 | 149 | 150 | 153 | 159 | 156 | 157 | 160 | 165 |
| | | Pr Dis | 261 | 262 | 264 | 268 | 302 | 303 | 304 | 309 | 344 | 345 | 347 | 352 | 390 | **391** | 393 | 398 | 440 | 441 | 443 | 447 | 493 | 494 | 496 | 500 |
| | | TotalPower | 2,788 | 2,786 | 2,780 | 2,805 | 3,114 | 3,112 | 3,106 | 3,131 | 3,479 | 3,476 | 3,471 | 3,496 | 3,873 | **3,870** | 3,865 | 3,890 | 4,313 | 4,311 | 4,305 | 4,330 | 4,830 | 4,827 | 4,822 | 4,847 |
| | 1350 | Capacity | 49,404 | 50,072 | 51,486 | 53,644 | 48,981 | 49,649 | 51,062 | 53,221 | 47,745 | 48,413 | 49,827 | 51,985 | 45,620 | 46,288 | 47,701 | 49,860 | 43,022 | 43,691 | 45,104 | 47,263 | 40,651 | 41,319 | 42,732 | 44,891 |
| | | S/T | 0.82 | 0.75 | 0.62 | 0.48 | 1.00 | 0.75 | 0.62 | 0.48 | 1.00 | 0.78 | 0.65 | 0.51 | 1.00 | 0.80 | 0.67 | 0.52 | 1.00 | 0.82 | 0.69 | 0.55 | 1.00 | 1.00 | 0.74 | 0.60 |
| | | Evap dT | 22.25 | 20.33 | 16.72 | 12.99 | 22.20 | 20.27 | 16.67 | 12.94 | 22.47 | 20.54 | 16.94 | 13.21 | 22.18 | 20.25 | 16.65 | 12.92 | 21.92 | 19.99 | 16.39 | 12.66 | 23.13 | 21.20 | 17.60 | 13.87 |
| | | Pr Suc | 128 | 129 | 132 | 138 | 135 | 137 | 140 | 145 | 142 | 143 | 146 | 152 | 147 | 149 | 152 | 157 | 153 | 154 | 157 | 162 | 159 | 161 | 164 | 169 |
| | | Pr Dis | 265 | 266 | 268 | 272 | 305 | 307 | 308 | 313 | 348 | 349 | 351 | 356 | 394 | 395 | 397 | 402 | 444 | 445 | 447 | 451 | 497 | 498 | 500 | 504 |
| | | TotalPower | 2,812 | 2,810 | 2,804 | 2,829 | 3,139 | 3,136 | 3,131 | 3,156 | 3,503 | 3,500 | 3,495 | 3,520 | 3,897 | 3,895 | 3,889 | 3,914 | 4,338 | 4,335 | 4,329 | 4,354 | 4,854 | 4,852 | 4,846 | 4,871 |

**IDB: Entering Indoor Dry Bulb Temperature** Shaded area reflects ACCA (TVA) conditions **kW = Total system power**

**High and low pressures are measured at the liquid and suction access fittings.** **Amps: Unit amps (comp.+ evaporator + condenser fan motors)**

**Design Subcooling, 16 - 19 °F @ the liquid access fitting connection ARI 95 test conditions. Design Superheat 8 - 12°F @ the compressor suction access fitting connection.**

| | | | Outdoor Ambient Temperature | | | | | | | | | | | | | | | | | | | | | | | |
|---|---|---|---|---|---|---|---|---|---|---|---|---|---|---|---|---|---|---|---|---|---|---|---|---|---|---|
| | | | 65 | | | | 75 | | | | 85 | | | | 95 | | | | 105 | | | | 115 | | | |
| | | | Entering Indoor Wet Bulb Temperature | | | | | | | | | | | | | | | | | | | | | | | |
| IDB | Airflow | ID WB | 59 | 63 | 67 | 71 | 59 | 63 | 67 | 71 | 59 | 63 | 67 | 71 | 59 | 63 | 67 | 71 | 59 | 63 | 67 | 71 | 59 | 63 | 67 | 71 |
| 80 | 900 | Capacity | 47,324 | 47,993 | 49,406 | 51,564 | 46,901 | 47,569 | 48,982 | 51,141 | 45,666 | 46,334 | 47,747 | 49,906 | 43,540 | 44,208 | 45,622 | 47,780 | 40,943 | 41,611 | 43,024 | 45,183 | 38,571 | 39,239 | 40,653 | 42,811 |
| | | S/T | 0.81 | 0.73 | 0.60 | 0.46 | 1.00 | 0.74 | 0.60 | 0.46 | 1.00 | 0.76 | 0.63 | 0.49 | 1.00 | 0.78 | 0.65 | 0.51 | 1.00 | 1.00 | 0.67 | 0.53 | 1.00 | 1.00 | 0.72 | 0.58 |
| | | Evap dT | 30.01 | 28.08 | 24.48 | 20.75 | 29.96 | 28.03 | 24.43 | 20.70 | 30.23 | 28.30 | 24.70 | 20.97 | 29.94 | 28.01 | 24.41 | 20.68 | 29.68 | 27.75 | 24.15 | 20.42 | 30.89 | 28.96 | 25.36 | 21.63 |
| | | Pr Suc | 122 | 123 | 127 | 132 | 129 | 131 | 134 | 139 | 136 | 137 | 140 | 146 | 141 | 143 | 146 | 151 | 147 | 148 | 151 | 157 | 154 | 155 | 158 | 163 |
| | | Pr Dis | 258 | 259 | 261 | 265 | 299 | 300 | 302 | 306 | 341 | 343 | 344 | 349 | 387 | 389 | 390 | 395 | 437 | 438 | 440 | 444 | 490 | 491 | 493 | 497 |
| | | TotalPower | 2,764 | 2,761 | 2,755 | 2,780 | 3,090 | 3,087 | 3,082 | 3,107 | 3,454 | 3,452 | 3,446 | 3,471 | 3,848 | 3,846 | 3,840 | 3,865 | 4,289 | 4,286 | 4,281 | 4,306 | 4,805 | 4,803 | 4,797 | 4,822 |
| | 1160 | Capacity | 48,203 | 48,871 | 50,284 | 52,443 | 47,779 | 48,447 | 49,860 | 52,019 | 46,544 | 47,212 | 48,625 | 50,784 | 44,418 | 45,086 | **46,500** | 48,658 | 41,821 | 42,489 | 43,902 | 46,061 | 39,449 | 40,118 | 41,531 | 43,690 |
| | | S/T | 1.00 | 0.83 | 0.69 | 0.55 | 1.00 | 0.83 | 0.70 | 0.56 | 1.00 | 0.86 | 0.73 | 0.59 | 1.00 | 1.00 | **0.74** | 0.60 | 1.00 | 1.00 | 0.77 | 0.63 | 1.00 | 1.00 | 0.82 | 0.68 |
| | | Evap dT | 28.20 | 26.28 | 22.67 | 18.94 | 28.15 | 26.22 | 22.62 | 18.89 | 28.42 | 26.49 | 22.89 | 19.16 | 28.13 | 26.20 | **22.60** | 18.87 | 27.87 | 25.95 | 22.34 | 18.61 | 29.08 | 27.15 | 23.55 | 19.82 |
| | | Pr Suc | 125 | 126 | 129 | 134 | 132 | 133 | 137 | 142 | 138 | 140 | 143 | 148 | 144 | 145 | **149** | 154 | 149 | 151 | 154 | 159 | 156 | 158 | 161 | 166 |
| | | Pr Dis | 261 | 262 | 264 | 269 | 302 | 303 | 305 | 309 | 345 | 346 | 348 | 352 | 391 | 392 | **394** | 398 | 440 | 441 | 443 | 448 | 493 | 494 | 496 | 501 |
| | | TotalPower | 2,790 | 2,787 | 2,782 | 2,807 | 3,116 | 3,114 | 3,108 | 3,133 | 3,480 | 3,478 | 3,472 | 3,497 | 3,875 | 3,872 | **3,866** | 3,891 | 4,315 | 4,312 | 4,307 | 4,332 | 4,832 | 4,829 | 4,824 | 4,848 |
| | 1350 | Capacity | 49,649 | 50,317 | 51,731 | 53,889 | 49,226 | 49,894 | 51,307 | 53,466 | 47,990 | 48,659 | 50,072 | 52,231 | 45,865 | 46,533 | 47,946 | 50,105 | 43,267 | 43,936 | 45,349 | 47,508 | 40,896 | 41,564 | 42,978 | 45,136 |
| | | S/T | 1.00 | 0.87 | 0.74 | 0.60 | 1.00 | 0.88 | 0.74 | 0.60 | 1.00 | 0.90 | 0.77 | 0.63 | 1.00 | 1.00 | 0.79 | 0.65 | 1.00 | 1.00 | 0.81 | 0.67 | 1.00 | 1.00 | 0.86 | 0.72 |
| | | Evap dT | 26.52 | 24.60 | 20.99 | 17.26 | 26.47 | 24.54 | 20.94 | 17.21 | 26.74 | 24.81 | 21.21 | 17.48 | 26.45 | 24.52 | 20.92 | 17.19 | 26.19 | 24.27 | 20.66 | 16.93 | 27.40 | 25.47 | 21.87 | 18.14 |
| | | Pr Suc | 128 | 130 | 133 | 138 | 136 | 137 | 140 | 146 | 142 | 144 | 147 | 152 | 148 | 149 | 152 | 158 | 153 | 155 | 158 | 163 | 160 | 161 | 165 | 170 |
| | | Pr Dis | 265 | 266 | 268 | 273 | 306 | 307 | 309 | 313 | 349 | 350 | 352 | 356 | 395 | 396 | 398 | 402 | 444 | 445 | 447 | 452 | 497 | 498 | 500 | 505 |
| | | TotalPower | 2,814 | 2,812 | 2,806 | 2,831 | 3,140 | 3,138 | 3,132 | 3,157 | 3,505 | 3,502 | 3,497 | 3,521 | 3,899 | 3,896 | 3,891 | 3,916 | 4,339 | 4,337 | 4,331 | 4,356 | 4,856 | 4,853 | 4,848 | 4,873 |
| 85 | 900 | Capacity | 48,121 | 48,790 | 50,203 | 52,362 | 47,698 | 48,366 | 49,779 | 51,938 | 46,463 | 47,131 | 48,544 | 50,703 | 44,337 | 45,005 | 46,419 | 48,577 | 41,740 | 42,408 | 43,821 | 45,980 | 39,368 | 40,037 | 41,450 | 43,609 |
| | | S/T | 1.00 | 0.83 | 0.70 | 0.56 | 1.00 | 0.84 | 0.70 | 0.56 | 1.00 | 1.00 | 0.73 | 0.59 | 1.00 | 1.00 | 0.75 | 0.61 | 1.00 | 1.00 | 0.77 | 0.63 | 1.00 | 1.00 | 1.00 | 0.68 |
| | | Evap dT | 33.80 | 31.87 | 28.27 | 24.54 | 33.75 | 31.82 | 28.21 | 24.48 | 34.02 | 32.09 | 28.49 | 24.75 | 33.73 | 31.80 | 28.20 | 24.46 | 33.47 | 31.54 | 27.94 | 24.21 | 34.68 | 32.75 | 29.15 | 25.41 |
| | | Pr Suc | 124 | 125 | 128 | 134 | 131 | 133 | 136 | 141 | 138 | 139 | 142 | 148 | 143 | 145 | 148 | 153 | 149 | 150 | 153 | 158 | 155 | 157 | 160 | 165 |
| | | Pr Dis | 259 | 260 | 262 | 267 | 300 | 301 | 303 | 307 | 343 | 344 | 346 | 350 | 389 | 390 | 392 | 396 | 438 | 439 | 441 | 446 | 491 | 492 | 494 | 499 |
| | | TotalPower | 2,770 | 2,767 | 2,762 | 2,787 | 3,096 | 3,094 | 3,088 | 3,113 | 3,460 | 3,458 | 3,452 | 3,477 | 3,855 | 3,852 | 3,846 | 3,871 | 4,295 | 4,292 | 4,287 | 4,312 | 4,812 | 4,809 | 4,804 | 4,828 |
| | 1160 | Capacity | 49,000 | 49,668 | 51,081 | 53,240 | 48,576 | 49,244 | 50,658 | 52,816 | 47,341 | 48,009 | 49,422 | 51,581 | 45,215 | 45,884 | 47,297 | 49,456 | 42,618 | 43,286 | 44,699 | 46,858 | 40,247 | 40,915 | 42,328 | 44,487 |
| | | S/T | 1.00 | 0.93 | 0.79 | 0.65 | 1.00 | 0.93 | 0.80 | 0.66 | 1.00 | 1.00 | 0.82 | 0.68 | 1.00 | 1.00 | 0.84 | 0.70 | 1.00 | 1.00 | 0.87 | 0.73 | 1.000 | 1.000 | 1.000 | 0.776 |
| | | Evap dT | 31.99 | 30.06 | 26.46 | 22.73 | 31.94 | 30.01 | 26.41 | 22.68 | 32.21 | 30.28 | 26.68 | 22.95 | 31.92 | 29.99 | 26.39 | 22.66 | 31.66 | 29.73 | 26.13 | 22.40 | 32.87 | 30.94 | 27.34 | 23.61 |
| | | Pr Suc | 126 | 128 | 131 | 136 | 134 | 135 | 138 | 144 | 140 | 142 | 145 | 150 | 146 | 147 | 150 | 156 | 151 | 153 | 156 | 161 | 158 | 159 | 163 | 168 |
| | | Pr Dis | 262 | 264 | 265 | 270 | 303 | 304 | 306 | 311 | 346 | 347 | 349 | 353 | 392 | 393 | 395 | 399 | 442 | 443 | 444 | 449 | 494 | 496 | 497 | 502 |
| | | TotalPower | 2,796 | 2,794 | 2,788 | 2,813 | 3,122 | 3,120 | 3,114 | 3,139 | 3,487 | 3,484 | 3,479 | 3,503 | 3,881 | 3,878 | 3,873 | 3,898 | 4,321 | 4,319 | 4,313 | 4,338 | 4,838 | 4,835 | 4,830 | 4,855 |
| | 1350 | Capacity | 50,446 | 51,115 | 52,528 | 54,686 | 50,023 | 50,691 | 52,104 | 54,263 | 48,787 | 49,456 | 50,869 | 53,028 | 46,662 | 47,330 | 48,744 | 50,902 | 44,065 | 44,733 | 46,146 | 48,305 | 41,693 | 42,361 | 43,775 | 45,933 |
| | | S/T | 1.00 | 0.97 | 0.84 | 0.70 | 1.00 | 1.00 | 0.84 | 0.70 | 1.00 | 1.00 | 0.87 | 0.73 | 1.00 | 1.00 | 0.89 | 0.75 | 1.00 | 1.00 | 1.00 | 0.77 | 1.00 | 1.00 | 1.00 | 0.82 |
| | | Evap dT | 30.31 | 28.38 | 24.78 | 21.05 | 30.26 | 28.33 | 24.73 | 21.00 | 30.53 | 28.60 | 25.00 | 21.27 | 30.24 | 28.31 | 24.71 | 20.98 | 29.98 | 28.05 | 24.45 | 20.72 | 31.19 | 29.26 | 25.66 | 21.93 |
| | | Pr Suc | 130 | 132 | 135 | 140 | 138 | 139 | 142 | 147 | 144 | 146 | 149 | 154 | 150 | 151 | 154 | 159 | 155 | 156 | 160 | 165 | 162 | 163 | 166 | 172 |
| | | Pr Dis | 266 | 267 | 269 | 274 | 307 | 308 | 310 | 315 | 350 | 351 | 353 | 357 | 396 | 397 | 399 | 403 | 445 | 447 | 448 | 453 | 498 | 499 | 501 | 506 |
| | | TotalPower | 2,820 | 2,818 | 2,812 | 2,837 | 3,147 | 3,144 | 3,139 | 3,164 | 3,511 | 3,508 | 3,503 | 3,528 | 3,905 | 3,903 | 3,897 | 3,922 | 4,345 | 4,343 | 4,337 | 4,362 | 4,862 | 4,860 | 4,854 | 4,879 |

**IDB: Entering Indoor Dry Bulb Temperature** — Shaded area reflects AHRI (TVA) conditions — **kW = Total system power**

**High and low pressures are measured at the liquid and suction access fittings.** — **Amps: Unit amps (comp.+ evaporator + condenser fan motors)**

**Design Subcooling, 16 - 19 °F @ the liquid access fitting connection ARI 95 test conditions. Design Superheat 8 - 12°F @ the compressor suction access fitting connection.**

# Expanded Cooling Data



| | | | Outdoor Ambient Temperature | | | | | | | | | | | | | | | | | | | | | | | |
|---|---|---|---|---|---|---|---|---|---|---|---|---|---|---|---|---|---|---|---|---|---|---|---|---|---|---|
| | | | 65 | | | | 75 | | | | 85 | | | | 95 | | | | 105 | | | | 115 | | | |
| | | | Entering Indoor Wet Bulb Temperature | | | | | | | | | | | | | | | | | | | | | | | |
| IDB | Airflow | ID WB | 59 | 63 | 67 | 71 | 59 | 63 | 67 | 71 | 59 | 63 | 67 | 71 | 59 | 63 | 67 | 71 | 59 | 63 | 67 | 71 | 59 | 63 | 67 | 71 |
| 70 | 900 | Capacity | 47,052 | 47,720 | 49,133 | - | 46,628 | 47,296 | 48,710 | - | 45,393 | 46,061 | 47,474 | - | 43,267 | 43,936 | 45,349 | - | 40,670 | 41,338 | 42,751 | - | 38,299 | 38,967 | 40,380 | - |
| | | S/T | 0.56 | 0.48 | 0.35 | - | 0.56 | 0.49 | 0.35 | - | 0.59 | 0.51 | 0.38 | - | 0.61 | 0.53 | 0.40 | - | 1.00 | 0.55 | 0.42 | - | 1.00 | 0.60 | 0.47 | - |
| | | Evap dT | 21.50 | 19.57 | 15.97 | - | 21.45 | 19.52 | 15.92 | - | 21.72 | 19.79 | 16.19 | - | 21.43 | 19.50 | 15.90 | - | 21.17 | 19.24 | 15.64 | - | 22.38 | 20.45 | 16.85 | - |
| | | Pr Suc | 121 | 123 | 126 | - | 129 | 130 | 133 | - | 135 | 137 | 140 | - | 141 | 142 | 145 | - | 146 | 148 | 151 | - | 153 | 154 | 158 | - |
| | | Pr Dis | 257 | 258 | 260 | - | 298 | 299 | 301 | - | 341 | 342 | 344 | - | 387 | 388 | 390 | - | 436 | 437 | 439 | - | 489 | 490 | 492 | - |
| | 1160 | Capacity | 47,930 | 48,598 | 50,011 | - | 47,506 | 48,175 | 49,588 | - | 46,271 | 46,939 | 48,352 | - | 44,146 | 44,814 | 46,227 | - | 41,548 | 42,216 | 43,630 | - | 39,177 | 39,845 | 41,258 | - |
| | | S/T | 0.65 | 0.58 | 0.45 | - | 0.66 | 0.58 | 0.45 | - | 0.68 | 0.61 | 0.48 | - | 1.00 | 0.63 | 0.49 | - | 1.00 | 0.65 | 0.52 | - | 1.00 | 0.70 | 0.57 | - |
| | | Evap dT | 19.69 | 17.76 | 14.16 | - | 19.64 | 17.71 | 14.11 | - | 19.91 | 17.98 | 14.38 | - | 19.62 | 17.69 | 14.09 | - | 19.36 | 17.43 | 13.83 | - | 20.57 | 18.64 | 15.04 | - |
| | | Pr Suc | 124 | 125 | 129 | - | 131 | 133 | 136 | - | 138 | 139 | 143 | - | 143 | 145 | 148 | - | 149 | 150 | 153 | - | 156 | 157 | 160 | - |
| | | Pr Dis | 261 | 262 | 263 | - | 301 | 302 | 304 | - | 344 | 345 | 347 | - | 390 | 391 | 393 | - | 440 | 441 | 443 | - | 493 | 494 | 495 | - |
| | 1350 | Capacity | 49,377 | 50,045 | 51,458 | - | 48,953 | 49,621 | 51,034 | - | 47,718 | 48,386 | 49,799 | - | 45,592 | 46,261 | 47,674 | - | 42,995 | 43,663 | 45,076 | - | 40,623 | 41,292 | 42,705 | - |
| | | S/T | 0.70 | 0.62 | 0.49 | - | 0.70 | 0.63 | 0.49 | - | 0.73 | 0.65 | 0.52 | - | 1.00 | 0.67 | 0.54 | - | 1.00 | 0.69 | 0.56 | - | 1.00 | 0.74 | 0.61 | - |
| | | Evap dT | 18.01 | 16.08 | 12.48 | - | 17.96 | 16.03 | 12.43 | - | 18.23 | 16.30 | 12.70 | - | 17.94 | 16.01 | 12.41 | - | 17.68 | 15.75 | 12.15 | - | 18.89 | 16.96 | 13.36 | - |
| | | Pr Suc | 128 | 129 | 132 | - | 135 | 137 | 140 | - | 142 | 143 | 146 | - | 147 | 149 | 152 | - | 153 | 154 | 157 | - | 159 | 161 | 164 | - |
| | | Pr Dis | 264 | 266 | 267 | - | 305 | 306 | 308 | - | 348 | 349 | 351 | - | 394 | 395 | 397 | - | 443 | 445 | 446 | - | 496 | 498 | 499 | - |
| 75 | 900 | Capacity | 47,079 | 47,747 | 49,161 | 51,319 | 46,656 | 47,324 | 48,737 | 50,896 | 45,420 | 46,089 | 47,502 | 49,661 | 43,295 | 43,963 | 45,376 | 47,535 | 40,698 | 41,366 | 42,779 | 44,938 | 38,326 | 38,994 | 40,408 | 42,566 |
| | | S/T | 0.68 | 0.61 | 0.47 | 0.33 | 0.69 | 0.61 | 0.48 | 0.34 | 1.00 | 0.64 | 0.51 | 0.37 | 1.00 | 0.66 | 0.52 | 0.38 | 1.00 | 0.68 | 0.55 | 0.41 | 1.00 | 0.73 | 0.60 | 0.46 |
| | | Evap dT | 25.74 | 23.81 | 20.21 | 16.48 | 25.69 | 23.76 | 20.16 | 16.43 | 25.96 | 24.03 | 20.43 | 16.70 | 25.67 | 23.74 | 20.14 | 16.41 | 25.41 | 23.48 | 19.88 | 16.15 | 26.62 | 24.69 | 21.09 | 17.36 |
| | | Pr Suc | 121 | 123 | 126 | 131 | 129 | 130 | 133 | 139 | 135 | 137 | 140 | 145 | 141 | 142 | 145 | 151 | 146 | 148 | 151 | 156 | 153 | 155 | 158 | 163 |
| | | Pr Dis | 257 | 259 | 260 | 265 | 298 | 299 | 301 | 306 | 341 | 342 | 344 | 348 | 387 | 388 | 390 | 394 | 437 | 438 | 439 | 444 | 489 | 491 | 492 | 497 |
| | 1160 | Capacity | 47,957 | 48,626 | 50,039 | 52,198 | 47,534 | 48,202 | 49,615 | 51,774 | 46,299 | 46,967 | 48,380 | 50,539 | 44,173 | **44,841** | 46,255 | 48,413 | 41,576 | 42,244 | 43,657 | 45,816 | 39,204 | 39,873 | 41,286 | 43,445 |
| | | S/T | 0.78 | 0.70 | 0.57 | 0.43 | 0.79 | 0.71 | 0.58 | 0.44 | 1.00 | 0.74 | 0.60 | 0.46 | 1.00 | **0.75** | 0.62 | 0.48 | 1.00 | 0.78 | 0.64 | 0.50 | 1.00 | 1.00 | 0.69 | 0.55 |
| | | Evap dT | 23.93 | 22.01 | 18.40 | 14.67 | 23.88 | 21.95 | 18.35 | 14.62 | 24.15 | 22.22 | 18.62 | 14.89 | 23.86 | **21.93** | 18.33 | 14.60 | 23.60 | 21.67 | 18.07 | 14.34 | 24.81 | 22.88 | 19.28 | 15.55 |
| | | Pr Suc | 124 | 126 | 129 | 134 | 131 | 133 | 136 | 141 | 138 | 139 | 143 | 148 | 143 | **145** | 148 | 153 | 149 | 150 | 153 | 159 | 156 | 157 | 160 | 165 |
| | | Pr Dis | 261 | 262 | 264 | 268 | 302 | 303 | 304 | 309 | 344 | 345 | 347 | 352 | 390 | **391** | 393 | 398 | 440 | 441 | 443 | 447 | 493 | 494 | 496 | 500 |
| | 1350 | Capacity | 49,404 | 50,072 | 51,486 | 53,644 | 48,981 | 49,649 | 51,062 | 53,221 | 47,745 | 48,413 | 49,827 | 51,985 | 45,620 | 46,288 | 47,701 | 49,860 | 43,022 | 43,691 | 45,104 | 47,263 | 40,651 | 41,319 | 42,732 | 44,891 |
| | | S/T | 0.82 | 0.75 | 0.62 | 0.48 | 1.00 | 0.75 | 0.62 | 0.48 | 1.00 | 0.78 | 0.65 | 0.51 | 1.00 | 0.80 | 0.67 | 0.52 | 1.00 | 0.82 | 0.69 | 0.55 | 1.00 | 1.00 | 0.74 | 0.60 |
| | | Evap dT | 22.25 | 20.33 | 16.72 | 12.99 | 22.20 | 20.27 | 16.67 | 12.94 | 22.47 | 20.54 | 16.94 | 13.21 | 22.18 | 20.25 | 16.65 | 12.92 | 21.92 | 19.99 | 16.39 | 12.66 | 23.13 | 21.20 | 17.60 | 13.87 |
| | | Pr Suc | 128 | 129 | 132 | 138 | 135 | 137 | 140 | 145 | 142 | 143 | 146 | 152 | 147 | 149 | 152 | 157 | 153 | 154 | 157 | 162 | 159 | 161 | 164 | 169 |
| | | Pr Dis | 265 | 266 | 268 | 272 | 305 | 307 | 308 | 313 | 348 | 349 | 351 | 356 | 394 | 395 | 397 | 402 | 444 | 445 | 447 | 451 | 497 | 498 | 500 | 504 |

IDB: Entering Indoor Dry Bulb Temperature

Shaded area reflects ACCA (TVA) conditions

kW = Total system power

High and low pressures are measured at the liquid and suction access fittings.

Amps: Unit amps (comp.+ evaporator + condenser fan motors)

Design Subcooling, 16 - 19 °F @ the liquid access fitting connection ARI 95 test conditions. Design Superheat 8 - 12°F @ the compressor suction access fitting connection.

| | | | Outdoor Ambient Temperature | | | | | | | | | | | | | | | | | | | | | | | |
|---|---|---|---|---|---|---|---|---|---|---|---|---|---|---|---|---|---|---|---|---|---|---|---|---|---|---|
| | | | 65 | | | | 75 | | | | 85 | | | | 95 | | | | 105 | | | | 115 | | | |
| | | | Entering Indoor Wet Bulb Temperature | | | | | | | | | | | | | | | | | | | | | | | |
| IDB | Airflow | ID WB | 59 | 63 | 67 | 71 | 59 | 63 | 67 | 71 | 59 | 63 | 67 | 71 | 59 | 63 | 67 | 71 | 59 | 63 | 67 | 71 | 59 | 63 | 67 | 71 |
| 70 | 900 | Capacity | 47,324 | 47,993 | 49,406 | 51,564 | 46,901 | 47,569 | 48,982 | 51,141 | 45,666 | 46,334 | 47,747 | 49,906 | 43,540 | 44,208 | 45,622 | 47,780 | 40,943 | 41,611 | 43,024 | 45,183 | 38,571 | 39,239 | 40,653 | 42,811 |
| | | S/T | 0.81 | 0.73 | 0.60 | 0.46 | 1.00 | 0.74 | 0.60 | 0.46 | 1.00 | 0.76 | 0.63 | 0.49 | 1.00 | 0.78 | 0.65 | 0.51 | 1.00 | 1.00 | 0.67 | 0.53 | 1.00 | 1.00 | 0.72 | 0.58 |
| | | Evap dT | 30.01 | 28.08 | 24.48 | 20.75 | 29.96 | 28.03 | 24.43 | 20.70 | 30.23 | 28.30 | 24.70 | 20.97 | 29.94 | 28.01 | 24.41 | 20.68 | 29.68 | 27.75 | 24.15 | 20.42 | 30.89 | 28.96 | 25.36 | 21.63 |
| | | Pr Suc | 122 | 123 | 127 | 132 | 129 | 131 | 134 | 139 | 136 | 137 | 140 | 146 | 141 | 143 | 146 | 151 | 147 | 148 | 151 | 157 | 154 | 155 | 158 | 163 |
| | | Pr Dis | 258 | 259 | 261 | 265 | 299 | 300 | 302 | 306 | 341 | 343 | 344 | 349 | 387 | 389 | 390 | 395 | 437 | 438 | 440 | 444 | 490 | 491 | 493 | 497 |
| | 1160 | Capacity | 48,203 | 48,871 | 50,284 | 52,443 | 47,779 | 48,447 | 49,860 | 52,019 | 46,544 | 47,212 | 48,625 | 50,784 | 44,418 | 45,086 | **46,500** | 48,658 | 41,821 | 42,489 | 43,902 | 46,061 | 39,449 | 40,118 | 41,531 | 43,690 |
| | | S/T | 1.00 | 0.83 | 0.69 | 0.55 | 1.00 | 0.83 | 0.70 | 0.56 | 1.00 | 0.86 | 0.73 | 0.59 | 1.00 | 1.00 | **0.74** | 0.60 | 1.00 | 1.00 | 0.77 | 0.63 | 1.00 | 1.00 | 0.82 | 0.68 |
| | | Evap dT | 28.20 | 26.28 | 22.67 | 18.94 | 28.15 | 26.22 | 22.62 | 18.89 | 28.42 | 26.49 | 22.89 | 19.16 | 28.13 | 26.20 | **22.60** | 18.87 | 27.87 | 25.95 | 22.34 | 18.61 | 29.08 | 27.15 | 23.55 | 19.82 |
| | | Pr Suc | 125 | 126 | 129 | 134 | 132 | 133 | 137 | 142 | 138 | 140 | 143 | 148 | 144 | 145 | **149** | 154 | 149 | 151 | 154 | 159 | 156 | 158 | 161 | 166 |
| | | Pr Dis | 261 | 262 | 264 | 269 | 302 | 303 | 305 | 309 | 345 | 346 | 348 | 352 | 391 | 392 | **394** | 398 | 440 | 441 | 443 | 448 | 493 | 494 | 496 | 501 |
| | 1350 | Capacity | 49,649 | 50,317 | 51,731 | 53,889 | 49,226 | 49,894 | 51,307 | 53,466 | 47,990 | 48,659 | 50,072 | 52,231 | 45,865 | 46,533 | 47,946 | 50,105 | 43,267 | 43,936 | 45,349 | 47,508 | 40,896 | 41,564 | 42,978 | 45,136 |
| | | S/T | 1.00 | 0.87 | 0.74 | 0.60 | 1.00 | 0.88 | 0.74 | 0.60 | 1.00 | 0.90 | 0.77 | 0.63 | 1.00 | 1.00 | 0.79 | 0.65 | 1.00 | 1.00 | 0.81 | 0.67 | 1.00 | 1.00 | 0.86 | 0.72 |
| | | Evap dT | 26.52 | 24.60 | 20.99 | 17.26 | 26.47 | 24.54 | 20.94 | 17.21 | 26.74 | 24.81 | 21.21 | 17.48 | 26.45 | 24.52 | 20.92 | 17.19 | 26.19 | 24.27 | 20.66 | 16.93 | 27.40 | 25.47 | 21.87 | 18.14 |
| | | Pr Suc | 128 | 130 | 133 | 138 | 136 | 137 | 140 | 146 | 142 | 144 | 147 | 152 | 148 | 149 | 152 | 158 | 153 | 155 | 158 | 163 | 160 | 161 | 165 | 170 |
| | | Pr Dis | 265 | 266 | 268 | 273 | 306 | 307 | 309 | 313 | 349 | 350 | 352 | 356 | 395 | 396 | 398 | 402 | 444 | 445 | 447 | 452 | 497 | 498 | 500 | 505 |
| 75 | 900 | Capacity | 48,121 | 48,790 | 50,203 | 52,362 | 47,698 | 48,366 | 49,779 | 51,938 | 46,463 | 47,131 | 48,544 | 50,703 | 44,337 | 45,005 | 46,419 | 48,577 | 41,740 | 42,408 | 43,821 | 45,980 | 39,368 | 40,037 | 41,450 | 43,609 |
| | | S/T | 1.00 | 0.83 | 0.70 | 0.56 | 1.00 | 0.84 | 0.70 | 0.56 | 1.00 | 1.00 | 0.73 | 0.59 | 1.00 | 1.00 | 0.75 | 0.61 | 1.00 | 1.00 | 0.77 | 0.63 | 1.00 | 1.00 | 1.00 | 0.68 |
| | | Evap dT | 33.80 | 31.87 | 28.27 | 24.54 | 33.75 | 31.82 | 28.21 | 24.48 | 34.02 | 32.09 | 28.49 | 24.75 | 33.73 | 31.80 | 28.20 | 24.46 | 33.47 | 31.54 | 27.94 | 24.21 | 34.68 | 32.75 | 29.15 | 25.41 |
| | | Pr Suc | 124 | 125 | 128 | 134 | 131 | 133 | 136 | 141 | 138 | 139 | 142 | 148 | 143 | 145 | 148 | 153 | 149 | 150 | 153 | 158 | 155 | 157 | 160 | 165 |
| | | Pr Dis | 259 | 260 | 262 | 267 | 300 | 301 | 303 | 307 | 343 | 344 | 346 | 350 | 389 | 390 | 392 | 396 | 438 | 439 | 441 | 446 | 491 | 492 | 494 | 499 |
| | 1160 | Capacity | 49,000 | 49,668 | 51,081 | 53,240 | 48,576 | 49,244 | 50,658 | 52,816 | 47,341 | 48,009 | 49,422 | 51,581 | 45,215 | 45,884 | 47,297 | 49,456 | 42,618 | 43,286 | 44,699 | 46,858 | 40,247 | 40,915 | 42,328 | 44,487 |
| | | S/T | 1.00 | 0.93 | 0.79 | 0.65 | 1.00 | 0.93 | 0.80 | 0.66 | 1.00 | 1.00 | 0.82 | 0.68 | 1.00 | 1.00 | 0.84 | 0.70 | 1.00 | 1.00 | 0.87 | 0.73 | 1.000 | 1.000 | 1.000 | 0.776 |
| | | Evap dT | 31.99 | 30.06 | 26.46 | 22.73 | 31.94 | 30.01 | 26.41 | 22.68 | 32.21 | 30.28 | 26.68 | 22.95 | 31.92 | 29.99 | 26.39 | 22.66 | 31.66 | 29.73 | 26.13 | 22.40 | 32.87 | 30.94 | 27.34 | 23.61 |
| | | Pr Suc | 126 | 128 | 131 | 136 | 134 | 135 | 138 | 144 | 140 | 142 | 145 | 150 | 146 | 147 | 150 | 156 | 151 | 153 | 156 | 161 | 158 | 159 | 163 | 168 |
| | | Pr Dis | 262 | 264 | 265 | 270 | 303 | 304 | 306 | 311 | 346 | 347 | 349 | 353 | 392 | 393 | 395 | 399 | 442 | 443 | 444 | 449 | 494 | 496 | 497 | 502 |
| | 1350 | Capacity | 50,446 | 51,115 | 52,528 | 54,686 | 50,023 | 50,691 | 52,104 | 54,263 | 48,787 | 49,456 | 50,869 | 53,028 | 46,662 | 47,330 | 48,744 | 50,902 | 44,065 | 44,733 | 46,146 | 48,305 | 41,693 | 42,361 | 43,775 | 45,933 |
| | | S/T | 1.00 | 0.97 | 0.84 | 0.70 | 1.00 | 1.00 | 0.84 | 0.70 | 1.00 | 1.00 | 0.87 | 0.73 | 1.00 | 1.00 | 0.89 | 0.75 | 1.00 | 1.00 | 1.00 | 0.77 | 1.00 | 1.00 | 1.00 | 0.82 |
| | | Evap dT | 30.31 | 28.38 | 24.78 | 21.05 | 30.26 | 28.33 | 24.73 | 21.00 | 30.53 | 28.60 | 25.00 | 21.27 | 30.24 | 28.31 | 24.71 | 20.98 | 29.98 | 28.05 | 24.45 | 20.72 | 31.19 | 29.26 | 25.66 | 21.93 |
| | | Pr Suc | 130 | 132 | 135 | 140 | 138 | 139 | 142 | 147 | 144 | 146 | 149 | 154 | 150 | 151 | 154 | 159 | 155 | 156 | 160 | 165 | 162 | 163 | 166 | 172 |
| | | Pr Dis | 266 | 267 | 269 | 274 | 307 | 308 | 310 | 315 | 350 | 351 | 353 | 357 | 396 | 397 | 399 | 403 | 445 | 447 | 448 | 453 | 498 | 499 | 501 | 506 |

**IDB: Entering Indoor Dry Bulb Temperature** **Shaded area reflects ACCA (TVA) conditions** **kW = Total system power**

**High and low pressures are measured at the liquid and suction access fittings.** **Amps: Unit amps (comp.+ evaporator + condenser fan motors)**

**Design Subcooling, 16 - 19 °F @ the liquid access fitting connection ARI 95 test conditions. Design Superheat 8 - 12°F @ the compressor suction access fitting connection.**

| | | | Outdoor Ambient Temperature | | | | | | | | | | | | | | | | | | | | | | | |
|---|---|---|---|---|---|---|---|---|---|---|---|---|---|---|---|---|---|---|---|---|---|---|---|---|---|---|
| | | | 65 | | | | 75 | | | | 85 | | | | 95 | | | | 105 | | | | 115 | | | |
| | | | Entering Indoor Wet Bulb Temperature | | | | | | | | | | | | | | | | | | | | | | | |
| IDB | Airflow | ID WB | 59 | 63 | 67 | 71 | 59 | 63 | 67 | 71 | 59 | 63 | 67 | 71 | 59 | 63 | 67 | 71 | 59 | 63 | 67 | 71 | 59 | 63 | 67 | 71 |
| 70 | 1500 | Capacity | 58,218 | 59,037 | 60,769 | – | 57,699 | 58,518 | 60,250 | – | 56,185 | 57,004 | 58,736 | – | 53,579 | 54,398 | 56,131 | – | 50,395 | 51,214 | 52,947 | – | 47,488 | 48,308 | 50,040 | – |
| | | S/T | 0.60 | 0.53 | 0.40 | – | 0.61 | 0.54 | 0.41 | – | 0.63 | 0.56 | 0.43 | – | 0.65 | 0.58 | 0.45 | – | 1.00 | 0.60 | 0.47 | – | 1.00 | 0.65 | 0.52 | – |
| | | Evap dT | 20.46 | 18.53 | 14.93 | – | 20.41 | 18.48 | 14.88 | – | 20.68 | 18.75 | 15.15 | – | 20.39 | 18.46 | 14.86 | – | 20.13 | 18.20 | 14.60 | – | 21.34 | 19.41 | 15.81 | – |
| | | Pr Suc | 120 | 121 | 124 | – | 127 | 129 | 132 | – | 133 | 135 | 138 | – | 139 | 140 | 143 | – | 144 | 146 | 149 | – | 151 | 152 | 155 | – |
| | | Pr Dis | 256 | 258 | 259 | – | 297 | 298 | 300 | – | 339 | 340 | 342 | – | 385 | 386 | 387 | – | 434 | 435 | 437 | – | 486 | 487 | 489 | – |
| | | TotalPower | 3,522 | 3,519 | 3,512 | – | 3,953 | 3,949 | 3,942 | – | 4,433 | 4,430 | 4,423 | – | 4,953 | 4,950 | 4,943 | – | 5,534 | 5,531 | 5,524 | – | 6,216 | 6,213 | 6,205 | – |
| | 1640 | Capacity | 58,753 | 59,572 | 61,304 | – | 58,234 | 59,053 | 60,785 | – | 56,719 | 57,538 | 59,271 | – | 54,114 | 54,933 | 56,665 | – | 50,930 | 51,749 | 53,481 | – | 48,023 | 48,842 | 50,575 | – |
| | | S/T | 0.64 | 0.57 | 0.44 | – | 0.65 | 0.57 | 0.44 | – | 0.67 | 0.60 | 0.47 | – | 0.69 | 0.62 | 0.49 | – | 1.00 | 0.64 | 0.51 | – | 1.00 | 0.69 | 0.56 | – |
| | | Evap dT | 19.69 | 17.76 | 14.16 | – | 19.64 | 17.71 | 14.11 | – | 19.91 | 17.98 | 14.38 | – | 19.62 | 17.69 | 14.09 | – | 19.36 | 17.43 | 13.83 | – | 20.57 | 18.64 | 15.04 | – |
| | | Pr Suc | 121 | 123 | 126 | – | 128 | 130 | 133 | – | 135 | 136 | 139 | – | 140 | 142 | 145 | – | 145 | 147 | 150 | – | 152 | 153 | 156 | – |
| | | Pr Dis | 258 | 259 | 261 | – | 298 | 299 | 301 | – | 341 | 342 | 343 | – | 386 | 387 | 389 | – | 435 | 436 | 438 | – | 487 | 489 | 490 | – |
| | | TotalPower | 3,537 | 3,534 | 3,526 | – | 3,968 | 3,964 | 3,957 | – | 4,448 | 4,445 | 4,437 | – | 4,968 | 4,965 | 4,957 | – | 5,549 | 5,546 | 5,538 | – | 6,231 | 6,227 | 6,220 | – |
| | 2250 | Capacity | 62,043 | 62,862 | 64,595 | – | 61,524 | 62,343 | 64,075 | – | 60,010 | 60,829 | 62,561 | – | 57,404 | 58,223 | 59,956 | – | 54,220 | 55,039 | 56,772 | – | 51,314 | 52,133 | 53,865 | – |
| | | S/T | 0.67 | 0.60 | 0.47 | – | 0.68 | 0.61 | 0.48 | – | 0.71 | 0.63 | 0.50 | – | 1.00 | 0.65 | 0.52 | – | 1.00 | 0.67 | 0.54 | – | 1.00 | 0.72 | 0.59 | – |
| | | Evap dT | 17.05 | 15.12 | 11.52 | – | 17.00 | 15.07 | 11.47 | – | 17.27 | 15.34 | 11.74 | – | 16.98 | 15.05 | 11.45 | – | 16.72 | 14.79 | 11.19 | – | 17.93 | 16.00 | 12.40 | – |
| | | Pr Suc | 128 | 129 | 132 | – | 135 | 136 | 140 | – | 141 | 143 | 146 | – | 147 | 148 | 151 | – | 152 | 153 | 157 | – | 159 | 160 | 163 | – |
| | | Pr Dis | 264 | 266 | 267 | – | 305 | 306 | 308 | – | 347 | 348 | 350 | – | 393 | 394 | 395 | – | 442 | 443 | 445 | – | 494 | 495 | 497 | – |
| | | TotalPower | 3,587 | 3,584 | 3,576 | – | 4,018 | 4,014 | 4,007 | – | 4,498 | 4,495 | 4,487 | – | 5,018 | 5,015 | 5,008 | – | 5,599 | 5,596 | 5,589 | – | 6,281 | 6,278 | 6,270 | – |
| 75 | 1500 | Capacity | 58,252 | 59,071 | 60,803 | 63,449 | 57,733 | 58,552 | 60,284 | 62,930 | 56,218 | 57,037 | 58,770 | 61,416 | 53,613 | 54,432 | 56,165 | 58,811 | 50,429 | 51,248 | 52,980 | 55,627 | 47,522 | 48,341 | 50,074 | 52,720 |
| | | S/T | 0.73 | 0.65 | 0.52 | 0.39 | 0.73 | 0.66 | 0.53 | 0.39 | 1.00 | 0.68 | 0.55 | 0.42 | 1.00 | 0.70 | 0.57 | 0.44 | 1.00 | 0.72 | 0.59 | 0.46 | 1.00 | 0.77 | 0.64 | 0.51 |
| | | Evap dT | 24.70 | 22.78 | 19.17 | 15.44 | 24.65 | 22.72 | 19.12 | 15.39 | 24.92 | 22.99 | 19.39 | 15.66 | 24.63 | 22.70 | 19.10 | 15.37 | 24.37 | 22.44 | 18.84 | 15.11 | 25.58 | 23.65 | 20.05 | 16.32 |
| | | Pr Suc | 120 | 121 | 124 | 130 | 127 | 129 | 132 | 137 | 134 | 135 | 138 | 143 | 139 | 140 | 143 | 148 | 144 | 146 | 149 | 154 | 151 | 152 | 155 | 160 |
| | | Pr Dis | 257 | 258 | 260 | 264 | 297 | 298 | 300 | 304 | 339 | 340 | 342 | 347 | 385 | 386 | 388 | 392 | 434 | 435 | 437 | 441 | 486 | 487 | 489 | 494 |
| | | TotalPower | 3,519 | 3,516 | 3,509 | 3,542 | 3,950 | 3,947 | 3,939 | 3,972 | 4,431 | 4,427 | 4,420 | 4,453 | 4,951 | 4,947 | 4,940 | 4,973 | 5,532 | 5,528 | 5,521 | 5,554 | 6,213 | 6,210 | 6,203 | 6,235 |
| | 1640 | Capacity | 58,787 | 59,606 | 61,338 | 63,984 | 58,267 | 59,087 | 60,819 | 63,465 | 56,753 | 57,572 | 59,305 | 61,951 | 54,148 | **54,967** | 56,699 | 59,345 | 50,964 | 51,783 | 53,515 | 56,161 | 48,057 | 48,876 | 50,608 | 53,255 |
| | | S/T | 0.76 | 0.69 | 0.56 | 0.42 | 0.77 | 0.70 | 0.57 | 0.43 | 1.00 | 0.72 | 0.59 | 0.45 | 1.00 | **0.74** | 0.61 | 0.47 | 1.00 | 0.76 | 0.63 | 0.49 | 1.00 | 0.81 | 0.68 | 0.54 |
| | | Evap dT | 23.93 | 22.01 | 18.40 | 14.67 | 23.88 | 21.95 | 18.35 | 14.62 | 24.15 | 22.22 | 18.62 | 14.89 | 23.86 | **21.93** | 18.33 | 14.60 | 23.60 | 21.67 | 18.07 | 14.34 | 24.81 | 22.88 | 19.28 | 15.55 |
| | | Pr Suc | 121 | 123 | 126 | 131 | 128 | 130 | 133 | 138 | 135 | 136 | 139 | 144 | 140 | **142** | 145 | 150 | 145 | 147 | 150 | 155 | 152 | 153 | 157 | 162 |
| | | Pr Dis | 258 | 259 | 261 | 265 | 298 | 300 | 301 | 306 | 341 | 342 | 344 | 348 | 386 | **387** | 389 | 394 | 435 | 436 | 438 | 443 | 488 | 489 | 491 | 495 |
| | | TotalPower | 3,534 | 3,531 | 3,523 | 3,556 | 3,965 | 3,961 | 3,954 | 3,987 | 4,445 | 4,442 | 4,435 | 4,467 | 4,965 | **4,962** | 4,955 | 4,988 | 5,546 | 5,543 | 5,536 | 5,569 | 6,228 | 6,225 | 6,217 | 6,250 |
| | 2250 | Capacity | 62,077 | 62,896 | 64,628 | 67,274 | 61,558 | 62,377 | 64,109 | 66,755 | 60,043 | 60,863 | 62,595 | 65,241 | 57,438 | 58,257 | 59,990 | 62,636 | 54,254 | 55,073 | 56,806 | 59,452 | 51,347 | 52,166 | 53,899 | 56,545 |
| | | S/T | 0.80 | 0.73 | 0.60 | 0.46 | 1.00 | 0.73 | 0.60 | 0.46 | 1.00 | 0.76 | 0.63 | 0.49 | 1.00 | 0.77 | 0.64 | 0.51 | 1.00 | 0.80 | 0.67 | 0.53 | 1.00 | 1.00 | 0.72 | 0.58 |
| | | Evap dT | 21.30 | 19.37 | 15.76 | 12.03 | 21.24 | 19.31 | 15.71 | 11.98 | 21.51 | 19.58 | 15.98 | 12.25 | 21.22 | 19.29 | 15.69 | 11.96 | 20.96 | 19.04 | 15.43 | 11.70 | 22.17 | 20.24 | 16.64 | 12.91 |
| | | Pr Suc | 128 | 129 | 132 | 137 | 135 | 136 | 140 | 145 | 141 | 143 | 146 | 151 | 147 | 148 | 151 | 156 | 152 | 154 | 157 | 162 | 159 | 160 | 163 | 168 |
| | | Pr Dis | 265 | 266 | 268 | 272 | 305 | 306 | 308 | 312 | 347 | 348 | 350 | 355 | 393 | 394 | 396 | 400 | 442 | 443 | 445 | 449 | 494 | 495 | 497 | 502 |
| | | TotalPower | 3,584 | 3,581 | 3,574 | 3,607 | 4,015 | 4,011 | 4,004 | 4,037 | 4,495 | 4,492 | 4,485 | 4,518 | 5,015 | 5,012 | 5,005 | 5,038 | 5,597 | 5,593 | 5,586 | 5,619 | 6,278 | 6,275 | 6,267 | 6,300 |

IDB: Entering Indoor Dry Bulb Temperature

Shaded area reflects ACCA (TVA) conditions

kW = Total system power

High and low pressures are measured at the liquid and suction access fittings.

Amps: Unit amps (comp.+ evaporator + condenser fan motors)

Design Subcooling, 16 - 19 °F @ the liquid access fitting connection ARI 95 test conditions. Design Superheat 8 - 12°F @ the compressor suction access fitting connection.

| | | | Outdoor Ambient Temperature | | | | | | | | | | | | | | | | | | | | | | | |
|---|---|---|---|---|---|---|---|---|---|---|---|---|---|---|---|---|---|---|---|---|---|---|---|---|---|---|
| | | | 65 | | | | 75 | | | | 85 | | | | 95 | | | | 105 | | | | 115 | | | |
| | | | Entering Indoor Wet Bulb Temperature | | | | | | | | | | | | | | | | | | | | | | | |
| IDB | Airflow | ID WB | 59 | 63 | 67 | 71 | 59 | 63 | 67 | 71 | 59 | 63 | 67 | 71 | 59 | 63 | 67 | 71 | 59 | 63 | 67 | 71 | 59 | 63 | 67 | 71 |
| 80 | 1500 | Capacity | 58,552 | 59,371 | 61,104 | 63,750 | 58,033 | 58,852 | 60,585 | 63,231 | 56,519 | 57,338 | 59,070 | 61,716 | 53,914 | 54,733 | 56,465 | 59,111 | 50,729 | 51,549 | 53,281 | 55,927 | 47,823 | 48,642 | 50,374 | 53,020 |
| | | S/T | 0.85 | 0.78 | 0.65 | 0.51 | 1.00 | 0.78 | 0.65 | 0.51 | 1.00 | 0.81 | 0.68 | 0.54 | 1.00 | 0.82 | 0.69 | 0.56 | 1.00 | 1.00 | 0.72 | 0.58 | 1.00 | 1.00 | 0.76 | 0.63 |
| | | Evap dT | 28.97 | 27.05 | 23.44 | 19.71 | 28.92 | 26.99 | 23.39 | 19.66 | 29.19 | 27.26 | 23.66 | 19.93 | 28.90 | 26.97 | 23.37 | 19.64 | 28.64 | 26.72 | 23.11 | 19.38 | 29.85 | 27.92 | 24.32 | 20.59 |
| | | Pr Suc | 120 | 122 | 125 | 130 | 128 | 129 | 132 | 137 | 134 | 136 | 139 | 144 | 139 | 141 | 144 | 149 | 145 | 146 | 149 | 154 | 151 | 153 | 156 | 161 |
| | | Pr Dis | 257 | 258 | 260 | 264 | 297 | 299 | 300 | 305 | 340 | 341 | 343 | 347 | 385 | 386 | 388 | 393 | 434 | 435 | 437 | 442 | 487 | 488 | 490 | 494 |
| | | TotalPower | 3,522 | 3,518 | 3,511 | 3,544 | 3,952 | 3,949 | 3,941 | 3,974 | 4,433 | 4,429 | 4,422 | 4,455 | 4,953 | 4,949 | 4,942 | 4,975 | 5,534 | 5,531 | 5,523 | 5,556 | 6,216 | 6,212 | 6,205 | 6,238 |
| | 1640 | Capacity | 59,087 | 59,906 | 61,638 | 64,285 | 58,568 | 59,387 | 61,119 | 63,765 | 57,054 | 57,873 | 59,605 | 62,251 | 54,448 | 55,267 | **57,000** | 59,646 | 51,264 | 52,083 | 53,816 | 56,462 | 48,357 | 49,176 | 50,909 | 53,555 |
| | | S/T | 0.89 | 0.81 | 0.68 | 0.54 | 1.00 | 0.82 | 0.69 | 0.55 | 1.00 | 0.84 | 0.71 | 0.57 | 1.00 | 0.86 | **0.73** | 0.59 | 1.00 | 1.00 | 0.75 | 0.61 | 1.00 | 1.00 | 0.80 | 0.66 |
| | | Evap dT | 28.20 | 26.28 | 22.67 | 18.94 | 28.15 | 26.22 | 22.62 | 18.89 | 28.42 | 26.49 | 22.89 | 19.16 | 28.13 | 26.20 | **22.60** | 18.87 | 27.87 | 25.95 | 22.34 | 18.61 | 29.08 | 27.15 | 23.55 | 19.82 |
| | | Pr Suc | 122 | 123 | 126 | 131 | 129 | 130 | 133 | 139 | 135 | 137 | 140 | 145 | 141 | 142 | **145** | 150 | 146 | 147 | 150 | 156 | 153 | 154 | 157 | 162 |
| | | Pr Dis | 259 | 260 | 261 | 266 | 299 | 300 | 302 | 306 | 341 | 342 | 344 | 349 | 387 | 388 | **390** | 394 | 436 | 437 | 439 | 443 | 488 | 489 | 491 | 496 |
| | | TotalPower | 3,536 | 3,533 | 3,526 | 3,559 | 3,967 | 3,964 | 3,956 | 3,989 | 4,448 | 4,444 | 4,437 | 4,470 | 4,968 | 4,964 | **4,957** | 4,990 | 5,549 | 5,545 | 5,538 | 5,571 | 6,230 | 6,227 | 6,220 | 6,253 |
| | 2250 | Capacity | 62,377 | 63,196 | 64,929 | 67,575 | 61,858 | 62,677 | 64,410 | 67,056 | 60,344 | 61,163 | 62,895 | 65,541 | 57,739 | 58,558 | 60,290 | 62,936 | 54,555 | 55,374 | 57,106 | 59,752 | 51,648 | 52,467 | 54,199 | 56,845 |
| | | S/T | 1.00 | 0.85 | 0.72 | 0.58 | 1.00 | 0.85 | 0.72 | 0.58 | 1.00 | 0.88 | 0.75 | 0.61 | 1.00 | 1.00 | 0.76 | 0.63 | 1.00 | 1.00 | 0.79 | 0.65 | 1.00 | 1.00 | 0.84 | 0.70 |
| | | Evap dT | 25.57 | 23.64 | 20.03 | 16.30 | 25.51 | 23.58 | 19.98 | 16.25 | 25.78 | 23.85 | 20.25 | 16.52 | 25.49 | 23.56 | 19.96 | 16.23 | 25.24 | 23.31 | 19.70 | 15.97 | 26.44 | 24.51 | 20.91 | 17.18 |
| | | Pr Suc | 128 | 130 | 133 | 138 | 136 | 137 | 140 | 145 | 142 | 143 | 146 | 151 | 147 | 149 | 152 | 157 | 153 | 154 | 157 | 162 | 159 | 161 | 164 | 169 |
| | | Pr Dis | 265 | 266 | 268 | 272 | 305 | 307 | 308 | 313 | 348 | 349 | 351 | 355 | 393 | 394 | 396 | 401 | 442 | 443 | 445 | 450 | 495 | 496 | 498 | 502 |
| | | TotalPower | 3,587 | 3,583 | 3,576 | 3,609 | 4,017 | 4,014 | 4,006 | 4,039 | 4,498 | 4,494 | 4,487 | 4,520 | 5,018 | 5,014 | 5,007 | 5,040 | 5,599 | 5,595 | 5,588 | 5,621 | 6,280 | 6,277 | 6,270 | 6,303 |
| 85 | 1500 | Capacity | 59,529 | 60,348 | 62,081 | 64,727 | 59,010 | 59,829 | 61,562 | 64,208 | 57,496 | 58,315 | 60,047 | 62,694 | 54,891 | 55,710 | 57,442 | 60,088 | 51,707 | 52,526 | 54,258 | 56,904 | 48,800 | 49,619 | 51,351 | 53,997 |
| | | S/T | 1.00 | 0.87 | 0.74 | 0.61 | 1.00 | 0.88 | 0.75 | 0.61 | 1.00 | 1.00 | 0.77 | 0.64 | 1.00 | 1.00 | 0.79 | 0.65 | 1.00 | 1.00 | 0.81 | 0.68 | 1.00 | 1.00 | 0.86 | 0.72 |
| | | Evap dT | 32.76 | 30.83 | 27.23 | 23.50 | 32.71 | 30.78 | 27.18 | 23.45 | 32.98 | 31.05 | 27.45 | 23.72 | 32.69 | 30.76 | 27.16 | 23.43 | 32.43 | 30.50 | 26.90 | 23.17 | 33.64 | 31.71 | 28.11 | 24.38 |
| | | Pr Suc | 122 | 124 | 127 | 132 | 129 | 131 | 134 | 139 | 136 | 137 | 140 | 145 | 141 | 143 | 146 | 151 | 146 | 148 | 151 | 156 | 153 | 155 | 158 | 163 |
| | | Pr Dis | 258 | 259 | 261 | 266 | 299 | 300 | 302 | 306 | 341 | 342 | 344 | 348 | 386 | 388 | 389 | 394 | 436 | 437 | 438 | 443 | 488 | 489 | 491 | 495 |
| | | TotalPower | 3,530 | 3,527 | 3,519 | 3,552 | 3,960 | 3,957 | 3,950 | 3,983 | 4,441 | 4,438 | 4,430 | 4,463 | 4,961 | 4,958 | 4,950 | 4,983 | 5,542 | 5,539 | 5,531 | 5,564 | 6,224 | 6,220 | 6,213 | 6,246 |
| | 1640 | Capacity | 60,064 | 60,883 | 62,616 | 65,262 | 59,545 | 60,364 | 62,096 | 64,743 | 58,031 | 58,850 | 60,582 | 63,228 | 55,425 | 56,244 | 57,977 | 60,623 | 52,241 | 53,060 | 54,793 | 57,439 | 49,335 | 50,154 | 51,886 | 54,532 |
| | | S/T | 1.00 | 0.91 | 0.78 | 0.64 | 1.00 | 0.92 | 0.78 | 0.65 | 1.00 | 1.00 | 0.81 | 0.67 | 1.00 | 1.00 | 0.83 | 0.69 | 1.00 | 1.00 | 0.85 | 0.71 | 1.000 | 1.000 | 1.000 | 0.761 |
| | | Evap dT | 31.99 | 30.06 | 26.46 | 22.73 | 31.94 | 30.01 | 26.41 | 22.68 | 32.21 | 30.28 | 26.68 | 22.95 | 31.92 | 29.99 | 26.39 | 22.66 | 31.66 | 29.73 | 26.13 | 22.40 | 32.87 | 30.94 | 27.34 | 23.61 |
| | | Pr Suc | 123 | 125 | 128 | 133 | 131 | 132 | 135 | 140 | 137 | 139 | 142 | 147 | 142 | 144 | 147 | 152 | 148 | 149 | 152 | 157 | 154 | 156 | 159 | 164 |
| | | Pr Dis | 260 | 261 | 263 | 267 | 300 | 301 | 303 | 308 | 342 | 344 | 345 | 350 | 388 | 389 | 391 | 395 | 437 | 438 | 440 | 444 | 489 | 490 | 492 | 497 |
| | | TotalPower | 3,545 | 3,541 | 3,534 | 3,567 | 3,975 | 3,972 | 3,964 | 3,997 | 4,456 | 4,452 | 4,445 | 4,478 | 4,976 | 4,972 | 4,965 | 4,998 | 5,557 | 5,553 | 5,546 | 5,579 | 6,239 | 6,235 | 6,228 | 6,261 |
| | 2250 | Capacity | 63,354 | 64,173 | 65,906 | 68,552 | 62,835 | 63,654 | 65,387 | 68,033 | 61,321 | 62,140 | 63,872 | 66,519 | 58,716 | 59,535 | 61,267 | 63,913 | 55,532 | 56,351 | 58,083 | 60,729 | 52,625 | 53,444 | 55,176 | 57,822 |
| | | S/T | 1.00 | 0.94 | 0.81 | 0.68 | 1.00 | 1.00 | 0.82 | 0.68 | 1.00 | 1.00 | 0.84 | 0.71 | 1.00 | 1.00 | 0.86 | 0.72 | 1.00 | 1.00 | 1.00 | 0.75 | 1.00 | 1.00 | 1.00 | 0.80 |
| | | Evap dT | 29.35 | 27.42 | 23.82 | 20.09 | 29.30 | 27.37 | 23.77 | 20.04 | 29.57 | 27.64 | 24.04 | 20.31 | 29.28 | 27.35 | 23.75 | 20.02 | 29.02 | 27.09 | 23.49 | 19.76 | 30.23 | 28.30 | 24.70 | 20.97 |
| | | Pr Suc | 130 | 132 | 135 | 140 | 137 | 139 | 142 | 147 | 144 | 145 | 148 | 153 | 149 | 151 | 154 | 159 | 154 | 156 | 159 | 164 | 161 | 162 | 165 | 171 |
| | | Pr Dis | 266 | 267 | 269 | 274 | 307 | 308 | 310 | 314 | 349 | 350 | 352 | 356 | 394 | 396 | 397 | 402 | 444 | 445 | 446 | 451 | 496 | 497 | 499 | 503 |
| | | TotalPower | 3,595 | 3,591 | 3,584 | 3,617 | 4,025 | 4,022 | 4,015 | 4,048 | 4,506 | 4,503 | 4,495 | 4,528 | 5,026 | 5,023 | 5,015 | 5,048 | 5,607 | 5,604 | 5,596 | 5,629 | 6,289 | 6,285 | 6,278 | 6,311 |

**IDB: Entering Indoor Dry Bulb Temperature** — Shaded area reflects AHRI (TVA) conditions — **kW = Total system power**

**High and low pressures are measured at the liquid and suction access fittings.** — **Amps: Unit amps (comp.+ evaporator + condenser fan motors)**

**Design Subcooling, 16 - 19 °F @ the liquid access fitting connection ARI 95 test conditions. Design Superheat 8 - 12°F @ the compressor suction access fitting connection.**

| | | | Outdoor Ambient Temperature | | | | | | | | | | | | | | | | | | | | | | | |
|---|---|---|---|---|---|---|---|---|---|---|---|---|---|---|---|---|---|---|---|---|---|---|---|---|---|---|
| | | | 65 | | | | 75 | | | | 85 | | | | 95 | | | | 105 | | | | 115 | | | |
| | | | Entering Indoor Wet Bulb Temperature | | | | | | | | | | | | | | | | | | | | | | | |
| IDB | Airflow | ID WB | 59 | 63 | 67 | 71 | 59 | 63 | 67 | 71 | 59 | 63 | 67 | 71 | 59 | 63 | 67 | 71 | 59 | 63 | 67 | 71 | 59 | 63 | 67 | 71 |
| 70 | 900 | Capacity | 58,218 | 59,037 | 60,769 | - | 57,699 | 58,518 | 60,250 | - | 56,185 | 57,004 | 58,736 | - | 53,579 | 54,398 | 56,131 | - | 50,395 | 51,214 | 52,947 | - | 47,488 | 48,308 | 50,040 | - |
| | | S/T | 0.60 | 0.53 | 0.40 | - | 0.61 | 0.54 | 0.41 | - | 0.63 | 0.56 | 0.43 | - | 0.65 | 0.58 | 0.45 | - | 1.00 | 0.60 | 0.47 | - | 1.00 | 0.65 | 0.52 | - |
| | | Evap dT | 20.46 | 18.53 | 14.93 | - | 20.41 | 18.48 | 14.88 | - | 20.68 | 18.75 | 15.15 | - | 20.39 | 18.46 | 14.86 | - | 20.13 | 18.20 | 14.60 | - | 21.34 | 19.41 | 15.81 | - |
| | | Pr Suc | 120 | 121 | 124 | - | 127 | 129 | 132 | - | 133 | 135 | 138 | - | 139 | 140 | 143 | - | 144 | 146 | 149 | - | 151 | 152 | 155 | - |
| | | Pr Dis | 256 | 258 | 259 | - | 297 | 298 | 300 | - | 339 | 340 | 342 | - | 385 | 386 | 387 | - | 434 | 435 | 437 | - | 486 | 487 | 489 | - |
| | 1160 | Capacity | 58,753 | 59,572 | 61,304 | - | 58,234 | 59,053 | 60,785 | - | 56,719 | 57,538 | 59,271 | - | 54,114 | 54,933 | 56,665 | - | 50,930 | 51,749 | 53,481 | - | 48,023 | 48,842 | 50,575 | - |
| | | S/T | 0.64 | 0.57 | 0.44 | - | 0.65 | 0.57 | 0.44 | - | 0.67 | 0.60 | 0.47 | - | 0.69 | 0.62 | 0.49 | - | 1.00 | 0.64 | 0.51 | - | 1.00 | 0.69 | 0.56 | - |
| | | Evap dT | 19.69 | 17.76 | 14.16 | - | 19.64 | 17.71 | 14.11 | - | 19.91 | 17.98 | 14.38 | - | 19.62 | 17.69 | 14.09 | - | 19.36 | 17.43 | 13.83 | - | 20.57 | 18.64 | 15.04 | - |
| | | Pr Suc | 121 | 123 | 126 | - | 128 | 130 | 133 | - | 135 | 136 | 139 | - | 140 | 142 | 145 | - | 145 | 147 | 150 | - | 152 | 153 | 156 | - |
| | | Pr Dis | 258 | 259 | 261 | - | 298 | 299 | 301 | - | 341 | 342 | 343 | - | 386 | 387 | 389 | - | 435 | 436 | 438 | - | 487 | 489 | 490 | - |
| | 1350 | Capacity | 62,043 | 62,862 | 64,595 | - | 61,524 | 62,343 | 64,075 | - | 60,010 | 60,829 | 62,561 | - | 57,404 | 58,223 | 59,956 | - | 54,220 | 55,039 | 56,772 | - | 51,314 | 52,133 | 53,865 | - |
| | | S/T | 0.67 | 0.60 | 0.47 | - | 0.68 | 0.61 | 0.48 | - | 0.71 | 0.63 | 0.50 | - | 1.00 | 0.65 | 0.52 | - | 1.00 | 0.67 | 0.54 | - | 1.00 | 0.72 | 0.59 | - |
| | | Evap dT | 17.05 | 15.12 | 11.52 | - | 17.00 | 15.07 | 11.47 | - | 17.27 | 15.34 | 11.74 | - | 16.98 | 15.05 | 11.45 | - | 16.72 | 14.79 | 11.19 | - | 17.93 | 16.00 | 12.40 | - |
| | | Pr Suc | 128 | 129 | 132 | - | 135 | 136 | 140 | - | 141 | 143 | 146 | - | 147 | 148 | 151 | - | 152 | 153 | 157 | - | 159 | 160 | 163 | - |
| | | Pr Dis | 264 | 266 | 267 | - | 305 | 306 | 308 | - | 347 | 348 | 350 | - | 393 | 394 | 395 | - | 442 | 443 | 445 | - | 494 | 495 | 497 | - |
| 75 | 900 | Capacity | 58,252 | 59,071 | 60,803 | 63,449 | 57,733 | 58,552 | 60,284 | 62,930 | 56,218 | 57,037 | 58,770 | 61,416 | 53,613 | 54,432 | 56,165 | 58,811 | 50,429 | 51,248 | 52,980 | 55,627 | 47,522 | 48,341 | 50,074 | 52,720 |
| | | S/T | 0.73 | 0.65 | 0.52 | 0.39 | 0.73 | 0.66 | 0.53 | 0.39 | 1.00 | 0.68 | 0.55 | 0.42 | 1.00 | 0.70 | 0.57 | 0.44 | 1.00 | 0.72 | 0.59 | 0.46 | 1.00 | 0.77 | 0.64 | 0.51 |
| | | Evap dT | 24.70 | 22.78 | 19.17 | 15.44 | 24.65 | 22.72 | 19.12 | 15.39 | 24.92 | 22.99 | 19.39 | 15.66 | 24.63 | 22.70 | 19.10 | 15.37 | 24.37 | 22.44 | 18.84 | 15.11 | 25.58 | 23.65 | 20.05 | 16.32 |
| | | Pr Suc | 120 | 121 | 124 | 130 | 127 | 129 | 132 | 137 | 134 | 135 | 138 | 143 | 139 | 140 | 143 | 148 | 144 | 146 | 149 | 154 | 151 | 152 | 155 | 160 |
| | | Pr Dis | 257 | 258 | 260 | 264 | 297 | 298 | 300 | 304 | 339 | 340 | 342 | 347 | 385 | 386 | 388 | 392 | 434 | 435 | 437 | 441 | 486 | 487 | 489 | 494 |
| | 1160 | Capacity | 58,787 | 59,606 | 61,338 | 63,984 | 58,267 | 59,087 | 60,819 | 63,465 | 56,753 | 57,572 | 59,305 | 61,951 | 54,148 | **54,967** | 56,699 | 59,345 | 50,964 | 51,783 | 53,515 | 56,161 | 48,057 | 48,876 | 50,608 | 53,255 |
| | | S/T | 0.76 | 0.69 | 0.56 | 0.42 | 0.77 | 0.70 | 0.57 | 0.43 | 1.00 | 0.72 | 0.59 | 0.45 | 1.00 | **0.74** | 0.61 | 0.47 | 1.00 | 0.76 | 0.63 | 0.49 | 1.00 | 0.81 | 0.68 | 0.54 |
| | | Evap dT | 23.93 | 22.01 | 18.40 | 14.67 | 23.88 | 21.95 | 18.35 | 14.62 | 24.15 | 22.22 | 18.62 | 14.89 | 23.86 | **21.93** | 18.33 | 14.60 | 23.60 | 21.67 | 18.07 | 14.34 | 24.81 | 22.88 | 19.28 | 15.55 |
| | | Pr Suc | 121 | 123 | 126 | 131 | 128 | 130 | 133 | 138 | 135 | 136 | 139 | 144 | 140 | **142** | 145 | 150 | 145 | 147 | 150 | 155 | 152 | 153 | 157 | 162 |
| | | Pr Dis | 258 | 259 | 261 | 265 | 298 | 300 | 301 | 306 | 341 | 342 | 344 | 348 | 386 | **387** | 389 | 394 | 435 | 436 | 438 | 443 | 488 | 489 | 491 | 495 |
| | 1350 | Capacity | 62,077 | 62,896 | 64,628 | 67,274 | 61,558 | 62,377 | 64,109 | 66,755 | 60,043 | 60,863 | 62,595 | 65,241 | 57,438 | 58,257 | 59,990 | 62,636 | 54,254 | 55,073 | 56,806 | 59,452 | 51,347 | 52,166 | 53,899 | 56,545 |
| | | S/T | 0.80 | 0.73 | 0.60 | 0.46 | 1.00 | 0.73 | 0.60 | 0.46 | 1.00 | 0.76 | 0.63 | 0.49 | 1.00 | 0.77 | 0.64 | 0.51 | 1.00 | 0.80 | 0.67 | 0.53 | 1.00 | 1.00 | 0.72 | 0.58 |
| | | Evap dT | 21.30 | 19.37 | 15.76 | 12.03 | 21.24 | 19.31 | 15.71 | 11.98 | 21.51 | 19.58 | 15.98 | 12.25 | 21.22 | 19.29 | 15.69 | 11.96 | 20.96 | 19.04 | 15.43 | 11.70 | 22.17 | 20.24 | 16.64 | 12.91 |
| | | Pr Suc | 128 | 129 | 132 | 137 | 135 | 136 | 140 | 145 | 141 | 143 | 146 | 151 | 147 | 148 | 151 | 156 | 152 | 154 | 157 | 162 | 159 | 160 | 163 | 168 |
| | | Pr Dis | 265 | 266 | 268 | 272 | 305 | 306 | 308 | 312 | 347 | 348 | 350 | 355 | 393 | 394 | 396 | 400 | 442 | 443 | 445 | 449 | 494 | 495 | 497 | 502 |

**IDB: Entering Indoor Dry Bulb Temperature**

Shaded area reflects ACCA (TVA) conditions

**kW = Total system power**

**High and low pressures are measured at the liquid and suction access fittings.**

**Amps: Unit amps (comp.+ evaporator + condenser fan motors)**

**Design Subcooling, 16 - 19 °F @ the liquid access fitting connection ARI 95 test conditions. Design Superheat 8 - 12°F @ the compressor suction access fitting connection.**

| | | | Outdoor Ambient Temperature | | | | | | | | | | | | | | | | | | | | | | | |
|---|---|---|---|---|---|---|---|---|---|---|---|---|---|---|---|---|---|---|---|---|---|---|---|---|---|---|
| | | | 65 | | | | 75 | | | | 85 | | | | 95 | | | | 105 | | | | 115 | | | |
| | | | Entering Indoor Wet Bulb Temperature | | | | | | | | | | | | | | | | | | | | | | | |
| IDB | Airflow | ID WB | 59 | 63 | 67 | 71 | 59 | 63 | 67 | 71 | 59 | 63 | 67 | 71 | 59 | 63 | 67 | 71 | 59 | 63 | 67 | 71 | 59 | 63 | 67 | 71 |
| 70 | 900 | Capacity | 58,552 | 59,371 | 61,104 | 63,750 | 58,033 | 58,852 | 60,585 | 63,231 | 56,519 | 57,338 | 59,070 | 61,716 | 53,914 | 54,733 | 56,465 | 59,111 | 50,729 | 51,549 | 53,281 | 55,927 | 47,823 | 48,642 | 50,374 | 53,020 |
| | | S/T | 0.85 | 0.78 | 0.65 | 0.51 | 1.00 | 0.78 | 0.65 | 0.51 | 1.00 | 0.81 | 0.68 | 0.54 | 1.00 | 0.82 | 0.69 | 0.56 | 1.00 | 1.00 | 0.72 | 0.58 | 1.00 | 1.00 | 0.76 | 0.63 |
| | | Evap dT | 28.97 | 27.05 | 23.44 | 19.71 | 28.92 | 26.99 | 23.39 | 19.66 | 29.19 | 27.26 | 23.66 | 19.93 | 28.90 | 26.97 | 23.37 | 19.64 | 28.64 | 26.72 | 23.11 | 19.38 | 29.85 | 27.92 | 24.32 | 20.59 |
| | | Pr Suc | 120 | 122 | 125 | 130 | 128 | 129 | 132 | 137 | 134 | 136 | 139 | 144 | 139 | 141 | 144 | 149 | 145 | 146 | 149 | 154 | 151 | 153 | 156 | 161 |
| | | Pr Dis | 257 | 258 | 260 | 264 | 297 | 299 | 300 | 305 | 340 | 341 | 343 | 347 | 385 | 386 | 388 | 393 | 434 | 435 | 437 | 442 | 487 | 488 | 490 | 494 |
| | 1160 | Capacity | 59,087 | 59,906 | 61,638 | 64,285 | 58,568 | 59,387 | 61,119 | 63,765 | 57,054 | 57,873 | 59,605 | 62,251 | 54,448 | 55,267 | **57,000** | 59,646 | 51,264 | 52,083 | 53,816 | 56,462 | 48,357 | 49,176 | 50,909 | 53,555 |
| | | S/T | 0.89 | 0.81 | 0.68 | 0.54 | 1.00 | 0.82 | 0.69 | 0.55 | 1.00 | 0.84 | 0.71 | 0.57 | 1.00 | 0.86 | **0.73** | 0.59 | 1.00 | 1.00 | 0.75 | 0.61 | 1.00 | 1.00 | 0.80 | 0.66 |
| | | Evap dT | 28.20 | 26.28 | 22.67 | 18.94 | 28.15 | 26.22 | 22.62 | 18.89 | 28.42 | 26.49 | 22.89 | 19.16 | 28.13 | 26.20 | **22.60** | 18.87 | 27.87 | 25.95 | 22.34 | 18.61 | 29.08 | 27.15 | 23.55 | 19.82 |
| | | Pr Suc | 122 | 123 | 126 | 131 | 129 | 130 | 133 | 139 | 135 | 137 | 140 | 145 | 141 | 142 | **145** | 150 | 146 | 147 | 150 | 156 | 153 | 154 | 157 | 162 |
| | | Pr Dis | 259 | 260 | 261 | 266 | 299 | 300 | 302 | 306 | 341 | 342 | 344 | 349 | 387 | 388 | **390** | 394 | 436 | 437 | 439 | 443 | 488 | 489 | 491 | 496 |
| | 1350 | Capacity | 62,377 | 63,196 | 64,929 | 67,575 | 61,858 | 62,677 | 64,410 | 67,056 | 60,344 | 61,163 | 62,895 | 65,541 | 57,739 | 58,558 | 60,290 | 62,936 | 54,555 | 55,374 | 57,106 | 59,752 | 51,648 | 52,467 | 54,199 | 56,845 |
| | | S/T | 1.00 | 0.85 | 0.72 | 0.58 | 1.00 | 0.85 | 0.72 | 0.58 | 1.00 | 0.88 | 0.75 | 0.61 | 1.00 | 1.00 | 0.76 | 0.63 | 1.00 | 1.00 | 0.79 | 0.65 | 1.00 | 1.00 | 0.84 | 0.70 |
| | | Evap dT | 25.57 | 23.64 | 20.03 | 16.30 | 25.51 | 23.58 | 19.98 | 16.25 | 25.78 | 23.85 | 20.25 | 16.52 | 25.49 | 23.56 | 19.96 | 16.23 | 25.24 | 23.31 | 19.70 | 15.97 | 26.44 | 24.51 | 20.91 | 17.18 |
| | | Pr Suc | 128 | 130 | 133 | 138 | 136 | 137 | 140 | 145 | 142 | 143 | 146 | 151 | 147 | 149 | 152 | 157 | 153 | 154 | 157 | 162 | 159 | 161 | 164 | 169 |
| | | Pr Dis | 265 | 266 | 268 | 272 | 305 | 307 | 308 | 313 | 348 | 349 | 351 | 355 | 393 | 394 | 396 | 401 | 442 | 443 | 445 | 450 | 495 | 496 | 498 | 502 |
| 75 | 900 | Capacity | 59,529 | 60,348 | 62,081 | 64,727 | 59,010 | 59,829 | 61,562 | 64,208 | 57,496 | 58,315 | 60,047 | 62,694 | 54,891 | 55,710 | 57,442 | 60,088 | 51,707 | 52,526 | 54,258 | 56,904 | 48,800 | 49,619 | 51,351 | 53,997 |
| | | S/T | 1.00 | 0.87 | 0.74 | 0.61 | 1.00 | 0.88 | 0.75 | 0.61 | 1.00 | 1.00 | 0.77 | 0.64 | 1.00 | 1.00 | 0.79 | 0.65 | 1.00 | 1.00 | 0.81 | 0.68 | 1.00 | 1.00 | 0.86 | 0.72 |
| | | Evap dT | 32.76 | 30.83 | 27.23 | 23.50 | 32.71 | 30.78 | 27.18 | 23.45 | 32.98 | 31.05 | 27.45 | 23.72 | 32.69 | 30.76 | 27.16 | 23.43 | 32.43 | 30.50 | 26.90 | 23.17 | 33.64 | 31.71 | 28.11 | 24.38 |
| | | Pr Suc | 122 | 124 | 127 | 132 | 129 | 131 | 134 | 139 | 136 | 137 | 140 | 145 | 141 | 143 | 146 | 151 | 146 | 148 | 151 | 156 | 153 | 155 | 158 | 163 |
| | | Pr Dis | 258 | 259 | 261 | 266 | 299 | 300 | 302 | 306 | 341 | 342 | 344 | 348 | 386 | 388 | 389 | 394 | 436 | 437 | 438 | 443 | 488 | 489 | 491 | 495 |
| | 1160 | Capacity | 60,064 | 60,883 | 62,616 | 65,262 | 59,545 | 60,364 | 62,096 | 64,743 | 58,031 | 58,850 | 60,582 | 63,228 | 55,425 | 56,244 | 57,977 | 60,623 | 52,241 | 53,060 | 54,793 | 57,439 | 49,335 | 50,154 | 51,886 | 54,532 |
| | | S/T | 1.00 | 0.91 | 0.78 | 0.64 | 1.00 | 0.92 | 0.78 | 0.65 | 1.00 | 1.00 | 0.81 | 0.67 | 1.00 | 1.00 | 0.83 | 0.69 | 1.00 | 1.00 | 0.85 | 0.71 | 1.000 | 1.000 | 1.000 | 0.761 |
| | | Evap dT | 31.99 | 30.06 | 26.46 | 22.73 | 31.94 | 30.01 | 26.41 | 22.68 | 32.21 | 30.28 | 26.68 | 22.95 | 31.92 | 29.99 | 26.39 | 22.66 | 31.66 | 29.73 | 26.13 | 22.40 | 32.87 | 30.94 | 27.34 | 23.61 |
| | | Pr Suc | 123 | 125 | 128 | 133 | 131 | 132 | 135 | 140 | 137 | 139 | 142 | 147 | 142 | 144 | 147 | 152 | 148 | 149 | 152 | 157 | 154 | 156 | 159 | 164 |
| | | Pr Dis | 260 | 261 | 263 | 267 | 300 | 301 | 303 | 308 | 342 | 344 | 345 | 350 | 388 | 389 | 391 | 395 | 437 | 438 | 440 | 444 | 489 | 490 | 492 | 497 |
| | 1350 | Capacity | 63,354 | 64,173 | 65,906 | 68,552 | 62,835 | 63,654 | 65,387 | 68,033 | 61,321 | 62,140 | 63,872 | 66,519 | 58,716 | 59,535 | 61,267 | 63,913 | 55,532 | 56,351 | 58,083 | 60,729 | 52,625 | 53,444 | 55,176 | 57,822 |
| | | S/T | 1.00 | 0.94 | 0.81 | 0.68 | 1.00 | 1.00 | 0.82 | 0.68 | 1.00 | 1.00 | 0.84 | 0.71 | 1.00 | 1.00 | 0.86 | 0.72 | 1.00 | 1.00 | 1.00 | 0.75 | 1.00 | 1.00 | 1.00 | 0.80 |
| | | Evap dT | 29.35 | 27.42 | 23.82 | 20.09 | 29.30 | 27.37 | 23.77 | 20.04 | 29.57 | 27.64 | 24.04 | 20.31 | 29.28 | 27.35 | 23.75 | 20.02 | 29.02 | 27.09 | 23.49 | 19.76 | 30.23 | 28.30 | 24.70 | 20.97 |
| | | Pr Suc | 130 | 132 | 135 | 140 | 137 | 139 | 142 | 147 | 144 | 145 | 148 | 153 | 149 | 151 | 154 | 159 | 154 | 156 | 159 | 164 | 161 | 162 | 165 | 171 |
| | | Pr Dis | 266 | 267 | 269 | 274 | 307 | 308 | 310 | 314 | 349 | 350 | 352 | 356 | 394 | 396 | 397 | 402 | 444 | 445 | 446 | 451 | 496 | 497 | 499 | 503 |

**IDB: Entering Indoor Dry Bulb Temperature**

Shaded area reflects ACCA (TVA) conditions

**kW = Total system power**

**High and low pressures are measured at the liquid and suction access fittings.**

**Amps: Unit amps (comp.+ evaporator + condenser fan motors)**

**Design Subcooling, 16 - 19 °F @ the liquid access fitting connection ARI 95 test conditions. Design Superheat 8 - 12°F @ the compressor suction access fitting connection.**

# Heating

**Heating Rating Table - Natural Gas and Propane**

| Unit | Gas Heat | Stage 1 Input/ Output (MBH) | Stage 2 Input/ Output (MBH) | Temp Rise High (ºF) | Temp Rise Low (ºF) | Thermal Efficiency (%) |
|---|---|---|---|---|---|---|
| DBG036*B | Low | 45 / 36 | 33.75 / 27 | 15 - 45 | 10 - 40 | 80% |
| | Medium | 70 / 56 | 52.5 / 42 | 25 - 55 | 20 - 50 | 80% |
| | High | 90 / 72 | 67.5 / 54 | 45 - 75 | 40 - 70 | 80% |
| DBG048*B | Low | 70 / 56 | 52.5 / 42 | 20 - 50 | 15 - 45 | 80% |
| | Medium | 90 / 72 | 67.5 / 54 | 30 - 60 | 25 -55 | 80% |
| | High | 115 / 92 | 86.25 / 69 | 40 - 70 | 35 - 65 | 80% |
| DBG060*B | Low | 90 / 72 | 67.5 / 54 | 25 - 55 | 20 - 50 | 80% |
| | Medium | 115 / 92 | 86.25 / 69 | 35 - 65 | 30 - 60 | 80% |
| | High | 140 /112 | 105 / 84 | 45 - 75 | 40 - 70 | 80% |

**Heat Exchanger and Burner Orifice Specifications**

| Unit | High Fire Rate Btu/Hr | Number of Burners | NG Orifice | LP Orifice |
|---|---|---|---|---|
| DBG036*B | 45,000 | 2 | 43 | 55 |
| | 70,000 | 3 | 43 | 55 |
| | 90,000 | 5 | 45 | 56 |
| DBG048*B | 70,000 | 3 | 43 | 55 |
| | 90,000 | 4 | 43 | 55 |
| | 115,000 | 5 | 43 | 55 |
| DBG060*B | 90,000 | 4 | 43 | 55 |
| | 115,000 | 5 | 43 | 55 |
| | 140,000 | 6 | 43 | 55 |

**Recommended Min-Max Airflow Range**

| Unit | High Fire Rate Btu/Hr | Heating Minimum Scfm | Cooling Minimum Scfm | Maximum Scfm |
|---|---|---|---|---|
| DBG036*B | 45,000 | 750 | 900 | 1350 |
| | 70,000 | 950 | | |
| | 90,000 | 900 | | |
| DBG048*B | 70,000 | 1050 | 1200 | 1800 |
| | 90,000 | 1125 | | |
| | 115,000 | 1225 | | |
| DBG060*B | 90,000 | 1225 | 1500 | 2250 |
| | 115,000 | 1325 | | |
| | 140,000 | 1400 | | |

**Heating Rating Table - Natural Gas and Propane**

| Unit | Gas Heat | Stage 1 Input/ Output (MBH) | Stage 2 Input/ Output (MBH) | Temp Rise High (ºF) | Temp Rise Low (ºF) | Thermal Efficiency (%) |
|---|---|---|---|---|---|---|
| DBG036*C | Low | 45 / 36 | 33.75 / 27 | 15 - 45 | 10 - 40 | 80% |
| | Medium | 70 / 56 | 52.5 / 42 | 25 - 55 | 20 - 50 | 80% |
| | High | 90 / 72 | 67.5 / 54 | 45 - 75 | 40 - 70 | 80% |
| DBG048*C | Low | 70 / 56 | 52.5 / 42 | 25 - 55 | 20 - 50 | 80% |
| | Medium | 90 / 72 | 67.5 / 54 | 30 - 60 | 25 - 55 | 80% |
| | High | 115 / 92 | 86.25 / 69 | 40 - 70 | 35 - 65 | 80% |
| DBG060*C | Low | 90 / 72 | 67.5 / 54 | 25 - 55 | 20 - 50 | 80% |
| | Medium | 115 / 92 | 86.25 / 69 | 35 - 65 | 30 - 60 | 80% |
| | High | 140 /112 | 105 / 84 | 45 - 75 | 40 - 70 | 80% |

**Heat Exchanger and Burner Orifice Specifications**

| Unit | High Fire Rate Btu/Hr | Number of Burners | NG Orifice | LP Orifice |
|---|---|---|---|---|
| DBG036*C | 45,000 | 2 | 43 | 55 |
| | 70,000 | 3 | 43 | 55 |
| | 90,000 | 5 | 45 | 56 |
| DBG048*C | 70,000 | 3 | 43 | 55 |
| | 90,000 | 4 | 43 | 55 |
| | 115,000 | 5 | 43 | 55 |
| DBG060*C | 90,000 | 4 | 43 | 55 |
| | 115,000 | 5 | 43 | 55 |
| | 140,000 | 6 | 43 | 55 |

**Recommended Min-Max Airflow Range**

| Unit | High Fire Rate Btu/Hr | Heating Minimum Scfm | Cooling Minimum Scfm | Maximum Scfm |
|---|---|---|---|---|
| DBG036*C | 45,000 | 750 | 900 | 1350 |
| | 70,000 | 950 | | |
| | 90,000 | 900 | | |
| DBG048*C | 70,000 | 950 | 1200 | 1800 |
| | 90,000 | 1125 | | |
| | 115,000 | 1225 | | |
| DBG060*C | 90,000 | 1225 | 1500 | 2250 |
| | 115,000 | 1325 | | |
| | 140,000 | 1400 | | |

**DBG036*B Standard Static Horizontal**

| ESP, In H2O | TURNS OPEN | | | | | | | | | | | | | | | | | |
|---|---|---|---|---|---|---|---|---|---|---|---|---|---|---|---|---|---|---|
| | 0 | | | 1 | | | 2 | | | 3 | | | 4 | | | 5 | | |
| | CFM | RPM | BHP | CFM | RPM | BHP | CFM | RPM | BHP | CFM | RPM | BHP | CFM | RPM | BHP | CFM | RPM | BHP |
| **0.1** | - | - | - | - | - | - | - | - | - | - | - | - | 1205 | 655 | 0.19 | 1066 | 600 | 0.14 |
| **0.2** | - | - | - | - | - | - | - | - | - | 1231 | 715 | 0.23 | 1067 | 655 | 0.17 | 908 | 600 | 0.12 |
| **0.3** | - | - | - | - | - | - | 1270 | 775 | 0.28 | 1093 | 715 | 0.20 | 905 | 655 | 0.14 | - | - | - |
| **0.4** | - | - | - | 1336 | 840 | 0.34 | 1134 | 775 | 0.25 | 931 | 715 | 0.18 | - | - | - | - | - | - |
| **0.5** | - | - | - | 1204 | 840 | 0.31 | 976 | 775 | 0.22 | - | - | - | - | - | - | - | - | - |
| **0.6** | 1271 | 900 | 0.38 | 1053 | 840 | 0.28 | - | - | - | - | - | - | - | - | - | - | - | - |
| **0.7** | 1128 | 900 | 0.34 | - | - | - | - | - | - | - | - | - | - | - | - | - | - | - |

**DBG036*C High-Static Horizontal[1]**

| ESP, In H2O | TURNS OPEN | | | | | | | | | | | | | | | | | |
|---|---|---|---|---|---|---|---|---|---|---|---|---|---|---|---|---|---|---|
| | 0 | | | 1 | | | 2 | | | 3 | | | 4 | | | 5 | | |
| | CFM | RPM | BHP | CFM | RPM | BHP | CFM | RPM | BHP | CFM | RPM | BHP | CFM | RPM | BHP | CFM | RPM | BHP |
| **0.7** | - | - | - | - | - | - | - | - | - | - | - | - | - | - | - | 1285 | 935 | 0.42 |
| **0.8** | - | - | - | - | - | - | - | - | - | - | - | - | 1346 | 990 | 0.46 | 1134 | 935 | 0.35 |
| **0.9** | - | - | - | - | - | - | - | - | - | - | - | - | 1203 | 990 | 0.42 | 954 | 935 | 0.31 |
| **1.0** | - | - | - | - | - | - | - | - | - | 1310 | 1050 | 0.51 | 1034 | 990 | 0.38 | - | - | - |
| **1.1** | - | - | - | - | - | - | - | - | - | 1156 | 1050 | 0.46 | - | - | - | - | - | - |
| **1.2** | - | - | - | - | - | - | 1253 | 1105 | 0.55 | 970 | 1050 | 0.41 | - | - | - | - | - | - |
| **1.3** | - | - | - | - | - | - | 1083 | 1105 | 0.50 | - | - | - | - | - | - | - | - | - |
| **1.4** | - | - | - | 1217 | 1160 | 0.61 | 868 | 1105 | 0.47 | - | - | - | - | - | - | - | - | - |
| **1.5** | 1338 | 1215 | 0.72 | 1034 | 1160 | 0.55 | - | - | - | - | - | - | - | - | - | - | - | - |
| **1.6** | 1177 | 1215 | 0.66 | - | - | - | - | - | - | - | - | - | - | - | - | - | - | - |

[1] To operate below 0.7" $H_2O$ external static pressure, motor and blower sheave must be changed to VL34 and AK59 respectively, or equivalents.

**DBG036*B Standard Static Downshot**

| ESP, In H2O | TURNS OPEN | | | | | | | | | | | | | | | | | |
|---|---|---|---|---|---|---|---|---|---|---|---|---|---|---|---|---|---|---|
| | 0 | | | 1 | | | 2 | | | 3 | | | 4 | | | 5 | | |
| | CFM | RPM | BHP | CFM | RPM | BHP | CFM | RPM | BHP | CFM | RPM | BHP | CFM | RPM | BHP | CFM | RPM | BHP |
| **0.1** | - | - | - | - | - | - | 1330 | 775 | 0.29 | 1170 | 715 | 0.21 | 1010 | 655 | 0.15 | 860 | 600 | 0.10 |
| **0.2** | - | - | - | - | - | - | 1211 | 775 | 0.26 | 1038 | 715 | 0.19 | 861 | 655 | 0.13 | - | - | - |
| **0.3** | - | - | - | 1278 | 840 | 0.33 | 1080 | 775 | 0.24 | 889 | 715 | 0.17 | - | - | - | - | - | - |
| **0.4** | 1341 | 900 | 0.40 | 1151 | 840 | 0.30 | 933 | 775 | 0.21 | - | - | - | - | - | - | - | - | - |
| **0.5** | 1218 | 900 | 0.37 | 1009 | 840 | 0.27 | - | - | - | - | - | - | - | - | - | - | - | - |
| **0.6** | 1081 | 900 | 0.33 | - | - | - | - | - | - | - | - | - | - | - | - | - | - | - |
| **0.7** | 926 | 900 | 0.30 | - | - | - | - | - | - | - | - | - | - | - | - | - | - | - |

**DBG036*C High-Static Downshot[1]**

| ESP, In H2O | TURNS OPEN | | | | | | | | | | | | | | | | | |
|---|---|---|---|---|---|---|---|---|---|---|---|---|---|---|---|---|---|---|
| | 0 | | | 1 | | | 2 | | | 3 | | | 4 | | | 5 | | |
| | CFM | RPM | BHP | CFM | RPM | BHP | CFM | RPM | BHP | CFM | RPM | BHP | CFM | RPM | BHP | CFM | RPM | BHP |
| **0.6** | - | - | - | - | - | - | - | - | - | - | - | - | - | - | - | 1314 | 935 | 0.43 |
| **0.7** | - | - | - | - | - | - | - | - | - | - | - | - | - | - | - | 1165 | 935 | 0.39 |
| **0.8** | - | - | - | - | - | - | - | - | - | - | - | - | 1235 | 990 | 0.43 | 995 | 935 | 0.32 |
| **0.9** | - | - | - | - | - | - | - | - | - | 1345 | 1050 | 0.53 | 1072 | 990 | 0.39 | - | - | - |
| **1.0** | - | - | - | - | - | - | - | - | - | 1193 | 1050 | 0.48 | 881 | 990 | 0.35 | - | - | - |
| **1.1** | - | - | - | - | - | - | 1291 | 1105 | 0.58 | 1019 | 1050 | 0.44 | - | - | - | - | - | - |
| **1.2** | - | - | - | - | - | - | 1129 | 1105 | 0.53 | - | - | - | - | - | - | - | - | - |
| **1.3** | - | - | - | 1259 | 1160 | 0.63 | 937 | 1105 | 0.48 | - | - | - | - | - | - | - | - | - |
| **1.4** | - | - | - | 1088 | 1160 | 0.58 | - | - | - | - | - | - | - | - | - | - | - | - |
| **1.5** | 1225 | 1215 | 0.70 | 882 | 1160 | 0.52 | - | - | - | - | - | - | - | - | - | - | - | - |
| **1.6** | 1043 | 1215 | 0.64 | - | - | - | - | - | - | - | - | - | - | - | - | - | - | - |

[1] To operate below 0.6" $H_2O$ external static pressure, motor and blower sheave must be changed to VL34 and AK59 respectively, or equivalents.

**DBG048*B Standard Static Horizontal**

| ESP, In H2O | TURNS OPEN | | | | | | | | | | | | | | | | | |
|---|---|---|---|---|---|---|---|---|---|---|---|---|---|---|---|---|---|---|
| | 0 | | | 1 | | | 2 | | | 3 | | | 4 | | | 5 | | |
| | CFM | RPM | BHP | CFM | RPM | BHP | CFM | RPM | BHP | CFM | RPM | BHP | CFM | RPM | BHP | CFM | RPM | BHP |
| **0.1** | - | - | - | 1792 | 930 | 0.58 | 1651 | 870 | 0.47 | 1512 | 810 | 0.37 | 1386 | 755 | 0.29 | 1244 | 695 | 0.22 |
| **0.2** | - | - | - | 1707 | 930 | 0.55 | 1560 | 870 | 0.44 | 1412 | 810 | 0.34 | 1277 | 755 | 0.27 | - | - | - |
| **0.3** | 1764 | 990 | 0.64 | 1617 | 930 | 0.51 | 1462 | 870 | 0.41 | 1304 | 810 | 0.31 | - | - | - | - | - | - |
| **0.4** | 1677 | 990 | 0.60 | 1522 | 930 | 0.48 | 1356 | 870 | 0.38 | - | - | - | - | - | - | - | - | - |
| **0.5** | 1584 | 990 | 0.57 | 1419 | 930 | 0.45 | 1240 | 870 | 0.34 | - | - | - | - | - | - | - | - | - |
| **0.6** | 1485 | 990 | 0.53 | 1307 | 930 | 0.41 | - | - | - | - | - | - | - | - | - | - | - | - |
| **0.7** | 1377 | 990 | 0.50 | - | - | - | - | - | - | - | - | - | - | - | - | - | - | - |

**DBG048*C High-Static Horizontal[1]**

| ESP, In H2O | TURNS OPEN | | | | | | | | | | | | | | | | | |
|---|---|---|---|---|---|---|---|---|---|---|---|---|---|---|---|---|---|---|
| | 0 | | | 1 | | | 2 | | | 3 | | | 4 | | | 5 | | |
| | CFM | RPM | BHP | CFM | RPM | BHP | CFM | RPM | BHP | CFM | RPM | BHP | CFM | RPM | BHP | CFM | RPM | BHP |
| **0.6** | - | - | - | - | - | - | - | - | - | - | - | - | 1659 | 1080 | 0.71 | 1495 | 1020 | 0.57 |
| **0.7** | - | - | - | - | - | - | - | - | - | 1733 | 1140 | 0.83 | 1573 | 1080 | 0.67 | 1398 | 1020 | 0.53 |
| **0.8** | - | - | - | - | - | - | - | - | - | 1650 | 1140 | 0.79 | 1481 | 1080 | 0.63 | 1293 | 1020 | 0.50 |
| **0.9** | - | - | - | - | - | - | 1735 | 1200 | 0.92 | 1562 | 1140 | 0.75 | 1381 | 1080 | 0.59 | - | - | - |
| **1.0** | - | - | - | - | - | - | 1651 | 1200 | 0.87 | 1468 | 1140 | 0.70 | 1273 | 1080 | 0.55 | - | - | - |
| **1.1** | - | - | - | 1744 | 1260 | 1.01 | 1562 | 1200 | 0.83 | 1365 | 1140 | 0.66 | - | - | - | - | - | - |
| **1.2** | - | - | - | 1659 | 1260 | 0.97 | 1465 | 1200 | 0.78 | 1252 | 1140 | 0.62 | - | - | - | - | - | - |
| **1.3** | 1762 | 1320 | 1.13 | 1569 | 1260 | 0.92 | 1361 | 1200 | 0.74 | - | - | - | - | - | - | - | - | - |
| **1.4** | 1677 | 1320 | 1.08 | 1472 | 1260 | 0.87 | 1245 | 1200 | 0.69 | - | - | - | - | - | - | - | - | - |
| **1.5** | 1586 | 1320 | 1.03 | 1366 | 1260 | 0.82 | - | - | - | - | - | - | - | - | - | - | - | - |
| **1.6** | 1488 | 1320 | 0.98 | 1248 | 1260 | 0.77 | - | - | - | - | - | - | - | - | - | - | - | - |
| **1.7** | 1382 | 1320 | 0.92 | - | - | - | - | - | - | - | - | - | - | - | - | - | - | - |
| **1.8** | 1263 | 1320 | 0.86 | - | - | - | - | - | - | - | - | - | - | - | - | - | - | - |

[1] To operate below 0.6" $H_2O$ external static pressure, motor and blower sheave must be changed to VL40 and AK66 respectively, or equivalents.

**DBG048*B Standard Static Downshot**

| ESP, In H2O | TURNS OPEN | | | | | | | | | | | | | | | | | |
|---|---|---|---|---|---|---|---|---|---|---|---|---|---|---|---|---|---|---|
| | 0 | | | 1 | | | 2 | | | 3 | | | 4 | | | 5 | | |
| | CFM | RPM | BHP | CFM | RPM | BHP | CFM | RPM | BHP | CFM | RPM | BHP | CFM | RPM | BHP | CFM | RPM | BHP |
| **0.1** | - | - | - | 1739 | 930 | 0.55 | 1580 | 870 | 0.44 | 1423 | 810 | 0.34 | 1280 | 755 | 0.26 | - | - | - |
| **0.2** | - | - | - | 1643 | 930 | 0.52 | 1477 | 870 | 0.41 | 1310 | 810 | 0.31 | - | - | - | - | - | - |
| **0.3** | 1707 | 990 | 0.61 | 1542 | 930 | 0.49 | 1366 | 870 | 0.38 | - | - | - | - | - | - | - | - | - |
| **0.4** | 1609 | 990 | 0.58 | 1433 | 930 | 0.46 | 1246 | 870 | 0.35 | - | - | - | - | - | - | - | - | - |
| **0.5** | 1504 | 990 | 0.54 | 1317 | 930 | 0.42 | - | - | - | - | - | - | - | - | - | - | - | - |
| **0.6** | 1391 | 990 | 0.51 | - | - | - | - | - | - | - | - | - | - | - | - | - | - | - |
| **0.7** | 1269 | 990 | 0.47 | - | - | - | - | - | - | - | - | - | - | - | - | - | - | - |

**DBG048*C High-Static Downshot[1]**

| ESP, In H2O | TURNS OPEN | | | | | | | | | | | | | | | | | |
|---|---|---|---|---|---|---|---|---|---|---|---|---|---|---|---|---|---|---|
| | 0 | | | 1 | | | 2 | | | 3 | | | 4 | | | 5 | | |
| | CFM | RPM | BHP | CFM | RPM | BHP | CFM | RPM | BHP | CFM | RPM | BHP | CFM | RPM | BHP | CFM | RPM | BHP |
| **0.6** | - | - | - | - | - | - | - | - | - | 1761 | 1140 | 0.84 | 1588 | 1080 | 0.69 | 1403 | 1020 | 0.55 |
| **0.7** | - | - | - | - | - | - | - | - | - | 1672 | 1140 | 0.80 | 1491 | 1080 | 0.65 | 1294 | 1020 | 0.51 |
| **0.8** | - | - | - | - | - | - | 1764 | 1200 | 0.94 | 1578 | 1140 | 0.76 | 1387 | 1080 | 0.61 | - | - | - |
| **0.9** | - | - | - | - | - | - | 1675 | 1200 | 0.90 | 1479 | 1140 | 0.72 | 1275 | 1080 | 0.57 | - | - | - |
| **1.0** | - | - | - | 1775 | 1260 | 1.04 | 1580 | 1200 | 0.85 | 1372 | 1140 | 0.68 | - | - | - | - | - | - |
| **1.1** | - | - | - | 1685 | 1260 | 1.00 | 1478 | 1200 | 0.81 | 1256 | 1140 | 0.64 | - | - | - | - | - | - |
| **1.2** | 1796 | 1320 | 1.16 | 1589 | 1260 | 0.95 | 1369 | 1200 | 0.76 | - | - | - | - | - | - | - | - | - |
| **1.3** | 1705 | 1320 | 1.11 | 1487 | 1260 | 0.90 | 1251 | 1200 | 0.71 | - | - | - | - | - | - | - | - | - |
| **1.4** | 1609 | 1320 | 1.06 | 1377 | 1260 | 0.85 | - | - | - | - | - | - | - | - | - | - | - | - |
| **1.5** | 1506 | 1320 | 1.01 | 1256 | 1260 | 0.80 | - | - | - | - | - | - | - | - | - | - | - | - |
| **1.6** | 1396 | 1320 | 0.96 | - | - | - | - | - | - | - | - | - | - | - | - | - | - | - |
| **1.7** | 1275 | 1320 | 0.90 | - | - | - | - | - | - | - | - | - | - | - | - | - | - | - |
| **1.8** | 1141 | 1320 | 0.84 | - | - | - | - | - | - | - | - | - | - | - | - | - | - | - |

[1] To operate below 0.6" $H_2O$ external static pressure, motor and blower sheave must be changed to VL34 and AK59 respectively, or equivalents.

**DBG060*B Standard Static Horizontal**

| ESP, In H2O | TURNS OPEN | | | | | | | | | | | | | | | | | |
|---|---|---|---|---|---|---|---|---|---|---|---|---|---|---|---|---|---|---|
| | 0 | | | 1 | | | 2 | | | 3 | | | 4 | | | 5 | | |
| | CFM | RPM | BHP | CFM | RPM | BHP | CFM | RPM | BHP | CFM | RPM | BHP | CFM | RPM | BHP | CFM | RPM | BHP |
| **0.1** | - | - | - | 2122 | 1075 | 0.92 | 1964 | 1005 | 0.74 | 1814 | 940 | 0.60 | 1665 | 875 | 0.47 | 1502 | 805 | 0.36 |
| **0.2** | - | - | - | 2050 | 1075 | 0.88 | 1887 | 1005 | 0.71 | 1731 | 940 | 0.57 | 1574 | 875 | 0.45 | - | - | - |
| **0.3** | - | - | - | 1976 | 1075 | 0.85 | 1807 | 1005 | 0.67 | 1642 | 940 | 0.53 | - | - | - | - | - | - |
| **0.4** | 2060 | 1140 | 0.99 | 1898 | 1075 | 0.81 | 1721 | 1005 | 0.64 | 1548 | 940 | 0.50 | - | - | - | - | - | - |
| **0.5** | 1985 | 1140 | 0.95 | 1817 | 1075 | 0.77 | 1631 | 1005 | 0.60 | - | - | - | - | - | - | - | - | - |
| **0.6** | 1906 | 1140 | 0.91 | 1731 | 1075 | 0.73 | 1535 | 1005 | 0.57 | - | - | - | - | - | - | - | - | - |
| **0.7** | 1824 | 1140 | 0.87 | 1640 | 1075 | 0.69 | - | - | - | - | - | - | - | - | - | - | - | - |
| **0.8** | 1737 | 1140 | 0.83 | 1542 | 1075 | 0.65 | - | - | - | - | - | - | - | - | - | - | - | - |

**DBG060*C High-Static Horizontal[1]**

| ESP, In H2O | TURNS OPEN | | | | | | | | | | | | | | | | | |
|---|---|---|---|---|---|---|---|---|---|---|---|---|---|---|---|---|---|---|
| | 0 | | | 1 | | | 2 | | | 3 | | | 4 | | | 5 | | |
| | CFM | RPM | BHP | CFM | RPM | BHP | CFM | RPM | BHP | CFM | RPM | BHP | CFM | RPM | BHP | CFM | RPM | BHP |
| **0.8** | - | - | - | - | - | - | 2182 | 1340 | 1.44 | 2017 | 1275 | 1.20 | 1840 | 1210 | 0.99 | 1650 | 1140 | 0.79 |
| **0.9** | - | - | - | - | - | - | 2117 | 1340 | 1.39 | 1946 | 1275 | 1.16 | 1762 | 1210 | 0.95 | 1562 | 1140 | 0.75 |
| **1.0** | - | - | - | 2233 | 1410 | 1.63 | 2049 | 1340 | 1.35 | 1872 | 1275 | 1.12 | 1680 | 1210 | 0.90 | - | - | - |
| **1.1** | - | - | - | 2169 | 1410 | 1.58 | 1978 | 1340 | 1.30 | 1794 | 1275 | 1.07 | 1592 | 1210 | 0.86 | - | - | - |
| **1.2** | - | - | - | 2102 | 1410 | 1.53 | 1905 | 1340 | 1.25 | 1712 | 1275 | 1.02 | - | - | - | - | - | - |
| **1.3** | 2216 | 1475 | 1.77 | 2033 | 1410 | 1.48 | 1827 | 1340 | 1.20 | 1624 | 1275 | 0.98 | - | - | - | - | - | - |
| **1.4** | 2150 | 1475 | 1.71 | 1961 | 1410 | 1.43 | 1746 | 1340 | 1.15 | 1531 | 1275 | 0.93 | - | - | - | - | - | - |
| **1.5** | 2081 | 1475 | 1.66 | 1885 | 1410 | 1.38 | 1660 | 1340 | 1.10 | - | - | - | - | - | - | - | - | - |
| **1.6** | 2010 | 1475 | 1.61 | 1805 | 1410 | 1.33 | 1567 | 1340 | 1.05 | - | - | - | - | - | - | - | - | - |
| **1.7** | 1936 | 1475 | 1.55 | 1721 | 1410 | 1.27 | - | - | - | - | - | - | - | - | - | - | - | - |
| **1.8** | 1857 | 1475 | 1.49 | 1631 | 1410 | 1.21 | - | - | - | - | - | - | - | - | - | - | - | - |

[1] To operate below 0.6" $H_2O$ external static pressure, motor and blower sheave must be changed to VL40 and AK66 respectively, or equivalents.

**DBG060*B Standard Static Downshot**

| ESP, In H2O | TURNS OPEN | | | | | | | | | | | | | | | | | |
|---|---|---|---|---|---|---|---|---|---|---|---|---|---|---|---|---|---|---|
| | 0 | | | 1 | | | 2 | | | 3 | | | 4 | | | 5 | | |
| | CFM | RPM | BHP | CFM | RPM | BHP | CFM | RPM | BHP | CFM | RPM | BHP | CFM | RPM | BHP | CFM | RPM | BHP |
| **0.1** | - | - | - | 2112 | 1075 | 0.90 | 1934 | 1005 | 0.72 | 1764 | 940 | 0.57 | 1595 | 875 | 0.45 | - | - | - |
| **0.2** | - | - | - | 2031 | 1075 | 0.86 | 1847 | 1005 | 0.69 | 1670 | 940 | 0.54 | - | - | - | - | - | - |
| **0.3** | - | - | - | 1947 | 1075 | 0.83 | 1755 | 1005 | 0.65 | 1570 | 940 | 0.51 | - | - | - | - | - | - |
| **0.4** | 2042 | 1140 | 0.97 | 1860 | 1075 | 0.79 | 1659 | 1005 | 0.62 | - | - | - | - | - | - | - | - | - |
| **0.5** | 1957 | 1140 | 0.93 | 1767 | 1075 | 0.75 | 1557 | 1005 | 0.58 | - | - | - | - | - | - | - | - | - |
| **0.6** | 1869 | 1140 | 0.89 | 1670 | 1075 | 0.71 | - | - | - | - | - | - | - | - | - | - | - | - |
| **0.7** | 1775 | 1140 | 0.85 | 1567 | 1075 | 0.67 | - | - | - | - | - | - | - | - | - | - | - | - |
| **0.8** | 1677 | 1140 | 0.81 | - | - | - | - | - | - | - | - | - | - | - | - | - | - | - |

**DBG060*C High-Static Downshot[1]**

| ESP, In H2O | TURNS OPEN | | | | | | | | | | | | | | | | | |
|---|---|---|---|---|---|---|---|---|---|---|---|---|---|---|---|---|---|---|
| | 0 | | | 1 | | | 2 | | | 3 | | | 4 | | | 5 | | |
| | CFM | RPM | BHP | CFM | RPM | BHP | CFM | RPM | BHP | CFM | RPM | BHP | CFM | RPM | BHP | CFM | RPM | BHP |
| **0.8** | - | - | - | - | - | - | 2180 | 1340 | 1.43 | 1993 | 1275 | 1.19 | 1794 | 1210 | 0.97 | 1578 | 1140 | 0.76 |
| **0.9** | - | - | - | - | - | - | 2106 | 1340 | 1.38 | 1913 | 1275 | 1.14 | 1705 | 1210 | 0.93 | - | - | - |
| **1.0** | - | - | - | 2239 | 1410 | 1.62 | 2030 | 1340 | 1.33 | 1829 | 1275 | 1.10 | 1612 | 1210 | 0.88 | - | - | - |
| **1.1** | - | - | - | 2166 | 1410 | 1.57 | 1950 | 1340 | 1.28 | 1741 | 1275 | 1.05 | 1513 | 1210 | 0.84 | - | - | - |
| **1.2** | - | - | - | 2090 | 1410 | 1.52 | 1867 | 1340 | 1.24 | 1648 | 1275 | 1.00 | - | - | - | - | - | - |
| **1.3** | 2219 | 1475 | 1.76 | 2012 | 1410 | 1.47 | 1779 | 1340 | 1.19 | 1549 | 1275 | 0.96 | - | - | - | - | - | - |
| **1.4** | 2144 | 1475 | 1.71 | 1930 | 1410 | 1.42 | 1687 | 1340 | 1.14 | - | - | - | - | - | - | - | - | - |
| **1.5** | 2067 | 1475 | 1.65 | 1844 | 1410 | 1.37 | 1589 | 1340 | 1.08 | - | - | - | - | - | - | - | - | - |
| **1.6** | 1986 | 1475 | 1.60 | 1754 | 1410 | 1.31 | - | - | - | - | - | - | - | - | - | - | - | - |
| **1.7** | 1902 | 1475 | 1.54 | 1658 | 1410 | 1.26 | - | - | - | - | - | - | - | - | - | - | - | - |
| **1.8** | 1813 | 1475 | 1.48 | 1556 | 1410 | 1.20 | - | - | - | - | - | - | - | - | - | - | - | - |

[1] To operate below 0.6" $H_2O$ external static pressure, motor and blower sheave must be changed to VL34 and AK59 respectively, or equivalents.

# Static Pressure

| 3-5 TONS | | |
|---|---|---|
| DOWNFLOW ECONOMIZER PRESSURE DROP | | |
| Cabinet | CFM | SP in.wg. |
| 3 Ton | 900 | .03" |
| | 1200 | .05" |
| | 1500 | .08" |
| 4 Ton | 1200 | .06" |
| | 1600 | .10" |
| | 2000 | .14" |
| 5 Ton | 1500 | .08" |
| | 2000 | .14" |
| | 2500 | .22" |

| 3-5 TONS | | |
|---|---|---|
| HORIZONTAL ECONOMIZER PRESSURE DROP | | |
| Cabinet | CFM | SP in.wg. |
| 3 Ton | 900 | .06" |
| | 1200 | .11" |
| | 1500 | .16" |
| 4 Ton | 1200 | .11" |
| | 1600 | .19" |
| | 2000 | .29" |
| 5 Ton | 1500 | .18" |
| | 2000 | .30" |
| | 2500 | .45" |

# Electrical Data

| Model Number | Electrical Rating | Compressor | | | Outdoor Fan Motor | | | Indoor Fan Motor | | | Optional Powered Convenience Outlet | Optional Power Exhaust | Power Supply | |
|---|---|---|---|---|---|---|---|---|---|---|---|---|---|---|
| | | QTY | RLA | LRA | QTY | HP | FLA | Type | HP | FLA | FLA | FLA | MCA | MOP |
| DBG0363B | 208/230/3/60 | 1 | 10.45 | 73 | 1 | 0.17 | 0.95 | Belt-Drive Standard Static | 1 | 3.4 | - | - | 17.4/17.4 | 25/25 |
| | | | | | | | | | | | 9.6/8.7 | - | 27.0/26.1 | 35/35 |
| | | | | | | | | | | | - | 1.7/1.5 | 19.1/18.9 | 25/25 |
| | | | | | | | | | | | 9.6/8.7 | 1.7/1.5 | 28.7/27.6 | 35/35 |
| DBG0363C | 208/230/3/60 | 1 | 10.45 | 73 | 1 | 0.17 | 0.95 | Belt-Drive High-Static | 1 | 3.4 | - | - | 17.4/17.4 | 25/25 |
| | | | | | | | | | | | 9.6/8.7 | - | 27.0/26.1 | 35/35 |
| | | | | | | | | | | | - | 1.7/1.5 | 19.1/18.9 | 25/25 |
| | | | | | | | | | | | 9.6/8.7 | 1.7/1.5 | 28.7/27.6 | 35/35 |
| DBG0364B | 460/3/60 | 1 | 5.77 | 38 | 1 | 0.17 | 0.48 | Belt-Drive Standard Static | 1 | 1.7 | - | - | 9.39 | 15 |
| | | | | | | | | | | | 4.3 | - | 13.7 | 15 |
| | | | | | | | | | | | - | 0.5 | 9.89 | 15 |
| | | | | | | | | | | | 4.3 | 0.5 | 14.2 | 15 |
| DBG0364C | 460/3/60 | 1 | 5.77 | 38 | 1 | 0.17 | 0.48 | Belt-Drive High-Static | 1 | 1.7 | - | - | 9.39 | 15 |
| | | | | | | | | | | | 4.3 | - | 13.7 | 15 |
| | | | | | | | | | | | - | 0.5 | 9.89 | 15 |
| | | | | | | | | | | | 4.3 | 0.5 | 14.2 | 15 |
| DBG0367B | 575/3/60 | 1 | 3.78 | 36.5 | 1 | 0.17 | 0.39 | Belt-Drive Standard Static | 1.5 | 2.3 | - | - | 7.42 | 15 |
| | | | | | | | | | | | 3.5 | - | 10.9 | 15 |
| | | | | | | | | | | | - | 0.6 | 8.02 | 15 |
| | | | | | | | | | | | 3.5 | 0.6 | 11.5 | 15 |
| DBG0367C | 575/3/60 | 1 | 3.78 | 36.5 | 1 | 0.17 | 0.39 | Belt-Drive High-Static | 1.5 | 2.3 | - | - | 7.42 | 15 |
| | | | | | | | | | | | 3.5 | - | 10.9 | 15 |
| | | | | | | | | | | | - | 0.6 | 8.02 | 15 |
| | | | | | | | | | | | 3.5 | 0.6 | 11.5 | 15 |
| DBG0483B | 208/230/3/60 | 1 | 13.14 | 83.1 | 1 | 0.25 | 1.4 | Belt-Drive Standard Static | 1 | 3.4 | - | - | 21.2/21.2 | 30/30 |
| | | | | | | | | | | | 9.6/8.7 | - | 30.8/29.9 | 40/40 |
| | | | | | | | | | | | - | 1.7/1.5 | 22.9/22.7 | 30/30 |
| | | | | | | | | | | | 9.6/8.7 | 1.7/1.5 | 32.5/31.4 | 40/40 |
| DBG0483C | 208/230/3/60 | 1 | 13.14 | 83.1 | 1 | 0.25 | 1.4 | Belt-Drive High-Static | 1.5 | 4.8 | - | - | 22.6/22.6 | 35/35 |
| | | | | | | | | | | | 9.6/8.7 | - | 32.2/31.3 | 45/40 |
| | | | | | | | | | | | - | 1.7/1.5 | 24.3/24.1 | 35/35 |
| | | | | | | | | | | | 9.6/8.7 | 1.7/1.5 | 33.9/32.8 | 45/40 |
| DBG0484B | 460/3/60 | 1 | 6.09 | 41 | 1 | 0.25 | 0.7 | Belt-Drive Standard Static | 1 | 1.7 | - | - | 10 | 15 |
| | | | | | | | | | | | 4.3 | - | 14.3 | 20 |
| | | | | | | | | | | | - | 0.5 | 10.5 | 15 |
| | | | | | | | | | | | 4.3 | 0.5 | 14.8 | 20 |
| DBG0484C | 460/3/60 | 1 | 6.09 | 41 | 1 | 0.25 | 0.7 | Belt-Drive High-Static | 1.5 | 2.4 | - | - | 10.7 | 15 |
| | | | | | | | | | | | 4.3 | - | 15 | 20 |
| | | | | | | | | | | | - | 0.5 | 11.2 | 15 |
| | | | | | | | | | | | 4.3 | 0.5 | 15.5 | 20 |
| DBG0487B | 575/3/60 | 1 | 4.36 | 33 | 1 | 0.25 | 0.55 | Belt-Drive Standard Static | 1.5 | 2.3 | - | - | 8.3 | 15 |
| | | | | | | | | | | | 3.5 | - | 11.8 | 15 |
| | | | | | | | | | | | - | 0.6 | 8.9 | 15 |
| | | | | | | | | | | | 3.5 | 0.6 | 12.4 | 15 |
| DBG0487C | 575/3/60 | 1 | 4.36 | 33 | 1 | 0.25 | 0.55 | Belt-Drive High-Static | 1.5 | 2.3 | - | - | 8.3 | 15 |
| | | | | | | | | | | | 3.5 | - | 11.8 | 15 |
| | | | | | | | | | | | - | 0.6 | 8.9 | 15 |
| | | | | | | | | | | | 3.5 | 0.6 | 12.4 | 15 |

# Electrical Data

| Model Number | Electrical Rating | Compressor | | | Outdoor Fan Motor | | | Indoor Fan Motor | | | Optional Powered Convenience Outlet | Optional Power Exhaust | Power Supply | |
|---|---|---|---|---|---|---|---|---|---|---|---|---|---|---|
| | | QTY | RLA | LRA | QTY | HP | FLA | Type | HP | FLA | FLA | FLA | MCA | MOP |
| DBG0603B | 208/230/3/60 | 1 | 15.9 | 110 | 1 | 0.33 | 2 | Belt-Drive Standard Static | 1 | 3.2 | - | - | 25.1/25.1 | 40/40 |
| | | | | | | | | | | | 9.6/8.7 | - | 34.7/33.8 | 50/45 |
| | | | | | | | | | | | - | 1.7/1.5 | 26.8/26.6 | 40/40 |
| | | | | | | | | | | | 9.6/8.7 | 1.7/1.5 | 36.4/35.3 | 50/45 |
| DBG0603C | 208/230/3/60 | 1 | 15.9 | 110 | 1 | 0.33 | 2 | Belt-Drive High-Static | 2 | 7.8 | - | - | 29.7/29.7 | 45/45 |
| | | | | | | | | | | | 9.6/8.7 | - | 39.3/38.4 | 50/50 |
| | | | | | | | | | | | - | 1.7/1.5 | 31.4/31.2 | 45/45 |
| | | | | | | | | | | | 9.6/8.7 | 1.7/1.5 | 41.0/39.9 | 50/50 |
| DBG0604B | 460/3/60 | 1 | 7.05 | 52 | 1 | 0.33 | 0.85 | Belt-Drive Standard Static | 1 | 1.5 | - | - | 11.2 | 15 |
| | | | | | | | | | | | 4.3 | - | 15.5 | 20 |
| | | | | | | | | | | | - | 0.5 | 11.7 | 15 |
| | | | | | | | | | | | 4.3 | 0.5 | 16 | 20 |
| DBG0604C | 460/3/60 | 1 | 7.05 | 52 | 1 | 0.33 | 0.85 | Belt-Drive High-Static | 2 | 3.9 | - | - | 13.6 | 20 |
| | | | | | | | | | | | 4.3 | - | 17.9 | 20 |
| | | | | | | | | | | | - | 0.5 | 14.1 | 20 |
| | | | | | | | | | | | 4.3 | 0.5 | 18.4 | 20 |
| DBG0607B | 575/3/60 | 1 | 5.13 | 39.5 | 1 | 0.33 | 0.67 | Belt-Drive Standard Static | 1 | 1.2 | - | - | 8.28 | 15 |
| | | | | | | | | | | | 3.5 | - | 11.8 | 15 |
| | | | | | | | | | | | - | 0.6 | 8.88 | 15 |
| | | | | | | | | | | | 3.5 | 0.6 | 12.4 | 15 |
| DBG0607C | 575/3/60 | 1 | 5.13 | 39.5 | 1 | 0.33 | 0.67 | Belt-Drive High-Static | 2 | 2.5 | - | - | 9.58 | 15 |
| | | | | | | | | | | | 3.5 | - | 13.1 | 15 |
| | | | | | | | | | | | - | 0.6 | 10.2 | 15 |
| | | | | | | | | | | | 3.5 | 0.6 | 13.7 | 15 |

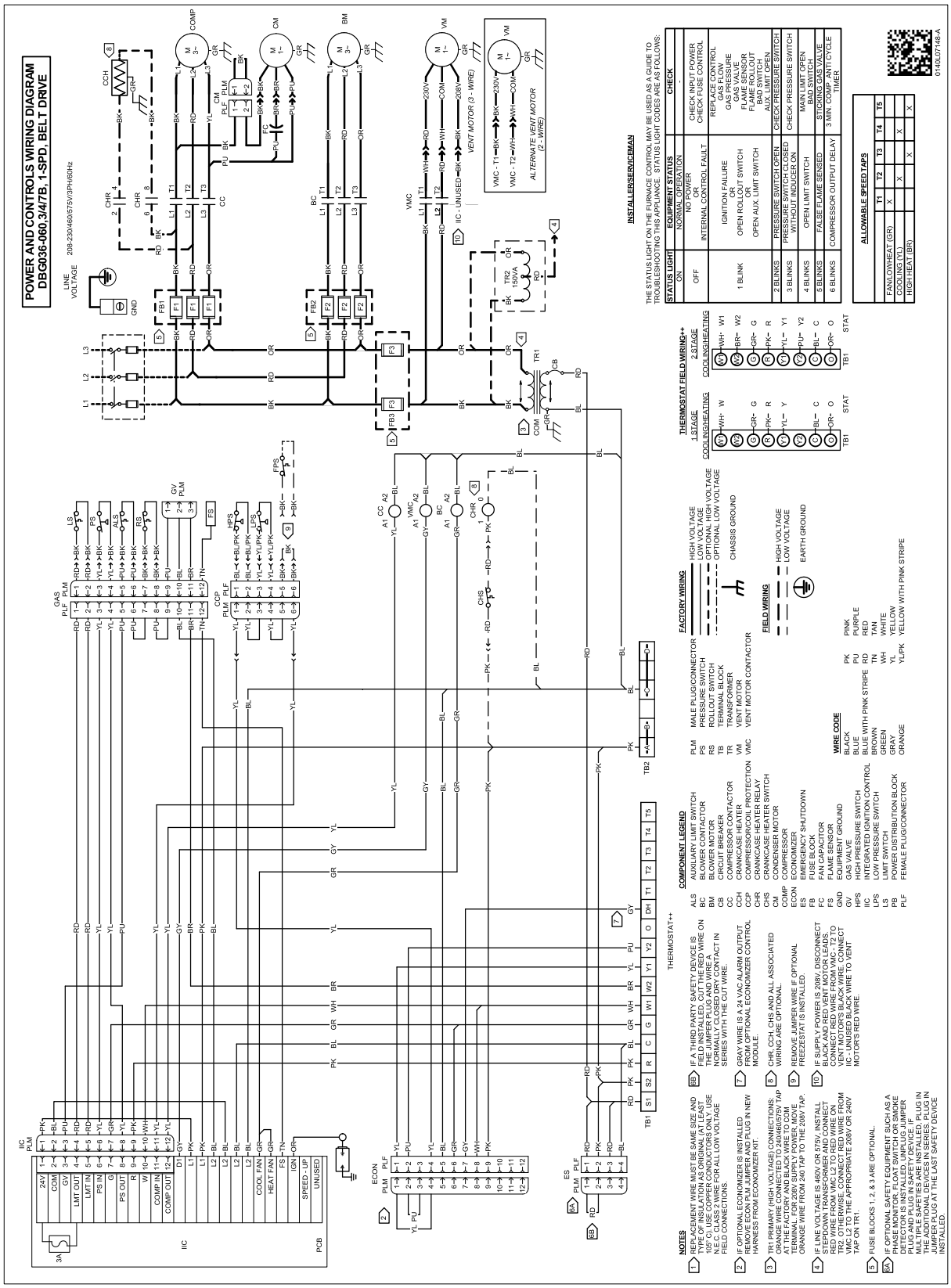


Wiring is subject to change. Always refer to the wiring diagram on the unit for the most up-to-date wiring.

**WARNING**

*High Voltage:* Disconnect all power before servicing or installing this unit. Multiple power sources may be present. Failure to do so may cause property damage, personal injury, or death.

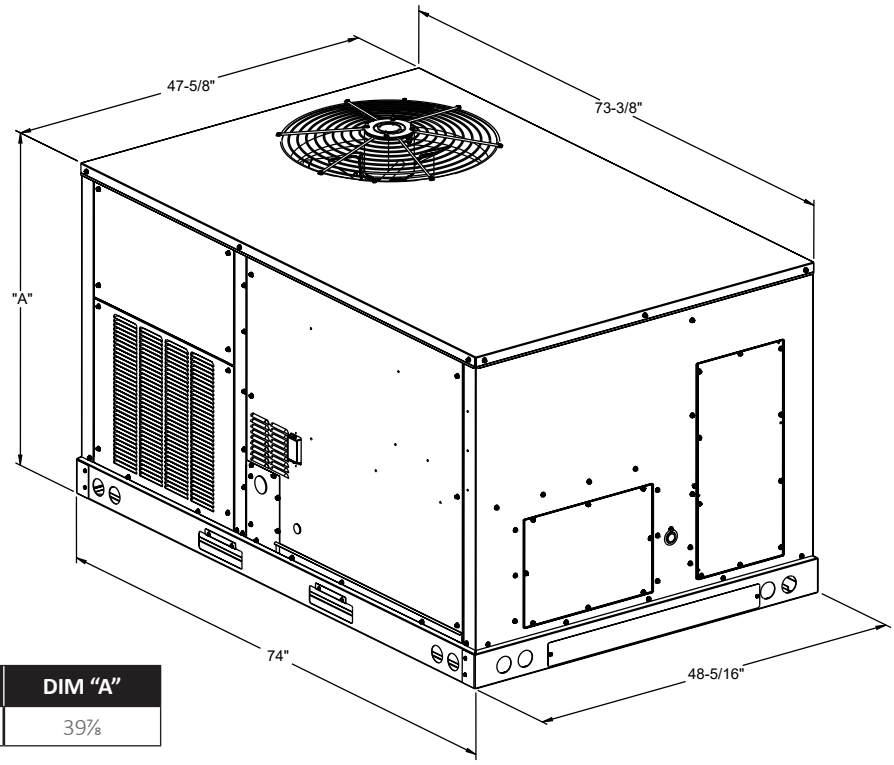


| Model Size | DIM "A" |
|---|---|
| 3,4 & 5 | 39⅞ |

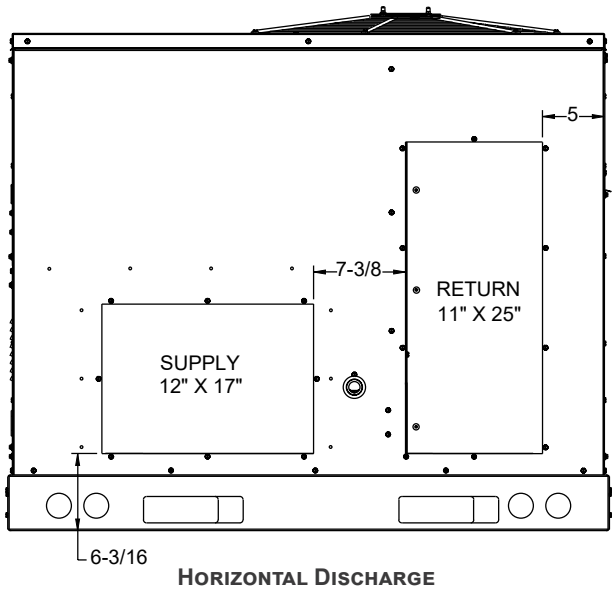


**Horizontal Discharge**

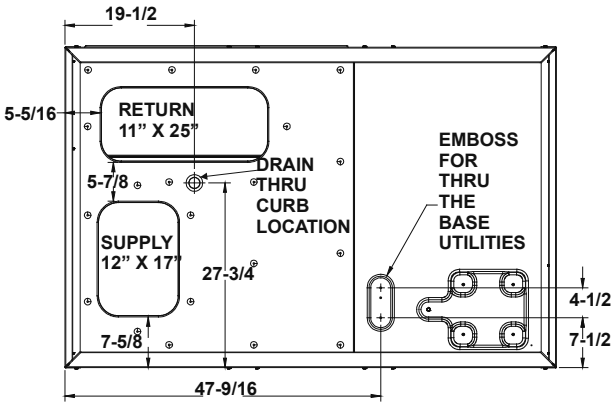


**BOTTOM VIEW OF UNIT**

**Vertical Discharge**

# Electrical Connections

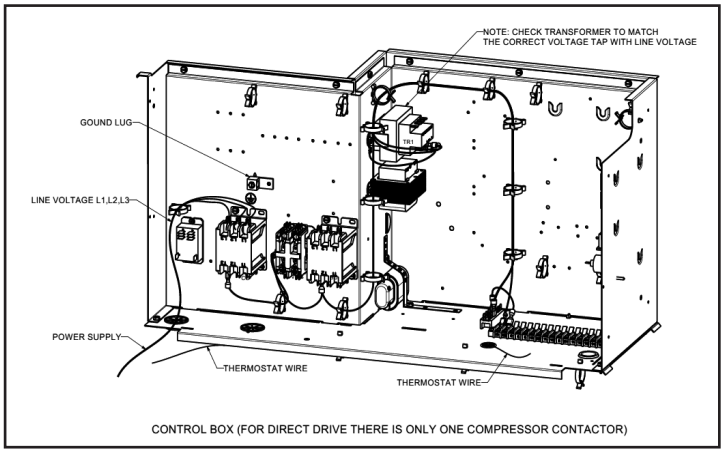


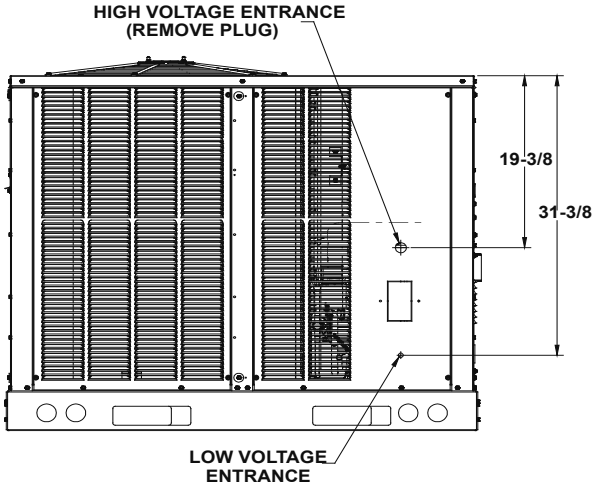


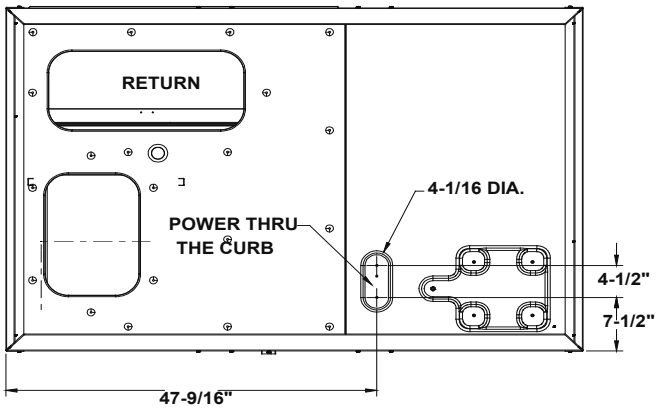


# Unit Clearances

## Service Clearance

Allow for recommended service clearances as shown in figure to the right. In situations that have multiple units, a 36" minimum clearance is required between the condenser coils. A clearance of 48" is recommended on all sides of the unit to allow service access and to ensure proper ventilation and condenser airflow. The top of the unit should be unobstructed. Provide a roof walkway along the sides of the unit for service and access to controls and components. Contact your Daikin sales representative for service requirements less than those recommended.

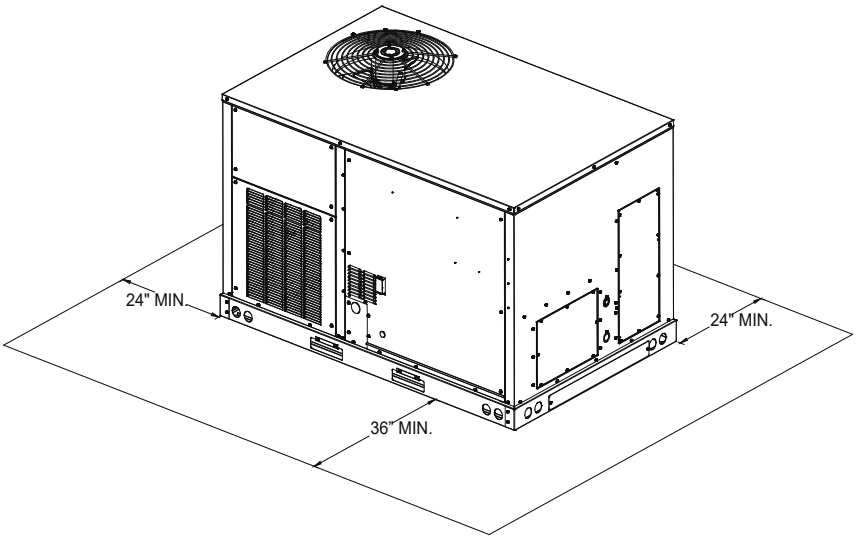

## Unit Location

The structural engineer must verify that the roof has adequate support and ability to minimize deflection. Take extreme caution when using on a wooden roof structure. Unit condenser coils should be in a location that avoids any heated exhaust air.

Allow sufficient space around the unit for maintenance/service clearance. Consult your Daikin sales representative if available clearances do not meet minimum recommendations.

Where code considerations, such as the NEC, require extended clearances, these take precedence.

Provisions for forks have been included in the unit base frame. No other fork locations are approved.

» Unit must be lifted by the four lifting holes located at the base frame corners.

» Lifting cables should be attached to the unit with shackles.

» The distance between the crane hook and the top of the unit must not be less than 60".

» Two spreader bars must span over the unit to prevent damage to the cabinet by the lift cables. Spreader bars must be of sufficient length so that cables do not come in contact with the unit during transport. Remove wood struts mounted beneath unit base frame before setting unit on roof curb. These struts are intended to protect unit base frame from forklift damage. To remove the struts, extract the sheet metal retainers and pull the struts through the base of the unit. Refer to rigging label on the unit.

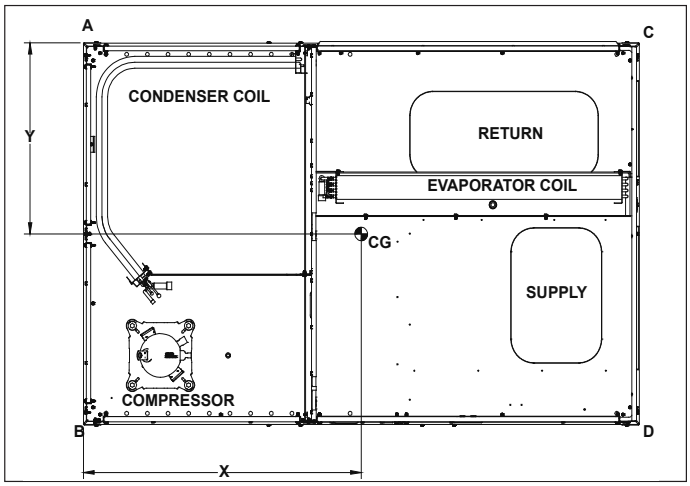


Corner & Center-of-Gravity Locations

**Important:** If using bottom discharge with roof curb, ductwork should be attached to the curb prior to installing the unit. Refer to the Roof Curb Installation Instructions for proper curb installation. Curbing must be installed in compliance with the National Roofing Contractors Association Manual. Lower unit carefully onto roof mounting curb. While rigging the unit, the center of gravity will cause the condenser end to be lower than the supply air end. Bring condenser end of unit into alignment with the curb. With condenser end of the unit resting on curb member and using curb as a fulcrum, lower opposite end of the unit until entire unit is seated on the curb. When a rectangular cantilever curb is used, take care to center the unit. Check for proper alignment and orientation of supply and return openings with duct.

## Roof Curb Installation

The roof curb is field-assembled and must be installed level (within 1/16" per foot side to side). A sub-base must be constructed by the contractor in applications involving pitched roofs. Gaskets are furnished and must be installed between the unit and curb. For proper installation, follow NRCA guidelines. In applications requiring post and rail installation, an I-beam securely mounted on multiple posts should support the unit on each side. In addition, the insulation on the underside of the unit should be protected from the elements. Applications in geographic areas subjected to seismic or hurricane conditions must meet code requirements for fastening the unit to the curb and the curb to the building structure. For further and more detailed information please refer to our Daikin Light Commercial Packaged unit IOD.

## Weights

| Model | Shipping Weight (lbs) | Operating Weight (lbs) | Corner Weights (lbs) | | | | Length | Width |
|---|---|---|---|---|---|---|---|---|
| | | | A | B | C | D | X (in) | Y (in) |
| DBG0363BH00001S | 654 | 608 | 145 | 162 | 97 | 204 | 36½ | 29⅛ |
| DBG0363BL00001S | 632 | 586 | 106 | 189 | 135 | 156 | 36 7/10 | 28⅜ |
| DBG0363BM00001S | 645 | 599 | 133 | 175 | 117 | 174 | 35 9/10 | 28 1/10 |
| DBG0483BH00001S | 690 | 644 | 128 | 208 | 126 | 182 | 35⅛ | 29⅛ |
| DBG0483BL00001S | 677 | 631 | 112 | 224 | 128 | 167 | 34⅜ | 29 9/10 |
| DBG0483BM00001S | 683 | 637 | 250 | 88 | 25 | 274 | 34⅜ | 27⅜ |
| DBG0603BH00001S | 716 | 670 | 110 | 241 | 147 | 172 | 35 1/10 | 29⅝ |
| DBG0603BL00001S | 709 | 663 | 236 | 112 | 32 | 283 | 35 1/10 | 28 7/10 |
| DBG0603BM00001S | 709 | 663 | 236 | 112 | 32 | 283 | 35 1/10 | 28 7/10 |

| Field Accessory part number | Description | Fits Model Sizes | Field-Installed | Factory-Installed | Operating Weight (lbs) |
|---|---|---|---|---|---|
| | **Stainless Steel Heat Exchanger** | | | | |
| | 45,000 BTU, 2 burners | 3 ton | | √ | |
| | 70,000 BTU, 3 burners | 3 ton | | √ | |
| | 90,000 BTU, 5 Burners | 3 ton | | √ | |
| | 70,000 BTU, 3 burners | 4 ton | | √ | |
| | 90,000 BTU, 4 burners | 4 ton | | √ | |
| | 115,000 BTU, 5 burners | 4 ton | | √ | |
| | 90,000 BTU, 4 burners | 5 ton | | √ | |
| | 115,000 BTU, 5 burners | 5 ton | | √ | |
| | 140,000 BTU, 6 burners | 5 ton | | √ | |
| | **Duct Smoke Detectors** | | | | |
| | Duct Smoke Detectors- Return | 3- 6 ton | | √ | 11 |
| | Duct Smoke Detectors- Supply | 3- 6 ton | | √ | 11 |
| | Duct Smoke Detectors- Supply and Return | 3- 6 ton | | √ | 11 |
| | **Non-Fused Disconnect Switch** | | | | |
| | 60 Amp Disconnect | 3- 6 ton | | √ | 5 |
| | 100 Amp Disconnect | 3- 6 ton | | √ | 5 |
| | 150 Amp Disconnect | 3- 6 ton | | √ | 5 |
| | **Convenience Outlets** | | | | |
| | Convenience Outlets- Powered, 208/230 V | 3- 6 ton | | √ | 42 |
| | Convenience Outlets- Powered, 460 V | 3- 6 ton | | √ | 42 |
| | Convenience Outlets- Powered, 575 V | 3- 6 ton | | √ | 42 |
| | Convenience Outlets- Non-Powered | 3- 6 ton | | √ | 2 |
| | **Hinged Access Panels** | | | | |
| | Hinged Access Panels, 39" cabinet (Gas only) | 3-5 ton | | √ | |
| | **Economizer** | | | | |
| 0270L01163 | Horizontal Economizer Ultra Low-Leak (Title 24) JADE® Dry-Bulb, 39" cabinet | 3-5 ton | √ | | 88 |
| 0270L01759 | Horizontal Economizer Ultra Low-Leak (Title 24) *JADE* Enthalpy Sensor, 39" cabinet | 3-5 ton | √ | | 88 |
| 0270L01753 | Downflow Economizer Standard Low-Leak *JADE* Enthalpy Sensor | 3-6 ton | √ | √ | 65 |
| 0270L01755 | Downflow Economizer Ultra Low-Leak (Title 24) *JADE* Enthalpy Sensor | 3-6 ton | √ | √ | 65 |
| 0270L01156 | Downflow Economizer Standard Low-Leak *JADE* Dry-Bulb | 3-6 ton | √ | √ | 65 |
| 0270L01158 | Downflow Economizer Ultra Low-Leak (Title 24) *JADE* Dry-Bulb | 3-6 ton | √ | √ | 65 |
| | **Curbs and Restraint Clips** | | | | |
| 0221L00014 | Roof Curb 14" Tall, Knocked Down | 3-6 ton | √ | | 80 |
| 0221L00015 | Roof Curb 24" Tall, Knocked Down | 3-6 ton | √ | | 109 |
| 0270L01261 | Hold Down Bracket Kit | 3-6 ton | √ | | 8 |
| 0270L01250 | Hold Down Bracket Kit for Daikin Roof curb | 3-6 ton | √ | | 8 |
| 0221L00019 | Roof Curb 14" Tall Seismic with Hold Down Brackets, Knocked Down | 3-6 ton | √ | | 102 |
| 0221L00020 | Roof Curb 14" Tall Wind-Rated Hurricane with Hold Down Brackets, Welded | 3-6 ton | √ | | 140 |
| | **Concentrics** | | | | |
| 0270L01602 | Concentric Diffuser 24 x 48 with 16" Dia. collars | 3-6 ton | √ | | 32 |
| 0270L01603 | Concentric Diffuser 24 x 48 with 18" Dia. collars | 3-6 ton | √ | | 35 |
| 0270L01335 | Concentric Duct Adaptor Kit for 16" Dia. Duct | 3-6 ton | √ | | 28 |
| 0270L01338 | Concentric Duct Adaptor Kit for 18" Dia. Duct | 3-6 ton | √ | | 28 |

Accessories availability may vary.

# Accessories

| Field Accessory part number | Description | Fits Model Sizes | Field-Installed | Factory-Installed | Operating Weight (lbs) |
|---|---|---|---|---|---|
| | **Damper** | | | | |
| 0270L01165 | 2 Position Motorized Damper | 3-6 ton | √ | | 40 |
| 0270L01166 | Manual Outdoor Air Damper | 3-6 ton | √ | | 24 |
| | **Flue Extensions (Gas Only)** | | | | |
| HEFLUE036 | Flue Extension, 39" cabinet (Gas only) | 3-5 ton | √ | | 6 |
| | **Hail Guard Kits** | | | | |
| HAILGD036HE | Condenser Coil Hail Guards, 39" cabinet | 3-5 ton | √ | √ | |
| | **Crankcase Heater Kits** | | | | |
| HECH36230 | Crankcase heater Kit 208/230 V | 3 ton | √ | | 1 |
| HECH4860230 | Crankcase heater Kit 208/230 V | 4-6 Ton | √ | | 1 |
| HECH36460 | Crankcase heater Kit 460 V | 3 ton | √ | | 1 |
| HECH4860460 | Crankcase heater Kit 460 V | 4-6 Ton | √ | | 1 |
| HECH36575 | Crankcase heater Kit 575 V | 3 ton | √ | | 1 |
| HECH4860575 | Crankcase heater Kit 575 V | 4-6 Ton | √ | | 1 |
| | **High-Efficiency Filters** | | | | |
| 0160L00271 | High-Efficiency MERV 8 Air Filter Kit- 20x25x2 (qty 2) | 3-5 ton | √ | | 4 |
| 0160L00202 | High-Efficiency MERV 13 Air Filter Kit- 20x25x2 (qty 2) | 3-5 ton | √ | | 4 |
| | **Misc Accessories** | | | | |
| LPHE-036072 | Propane Conversion Kit (Gas only) | 3-6 ton | √ | | 1 |
| HAKT036150 | High Altitude Kit (Gas only) | 3-6 ton | √ | | 1 |
| TTBCKHE01 | Through the Base Gas/Electrical | 3-6 ton | √ | √ | 1 |
| 3PMKP3 | Phase Monitor Kit | 3-6 ton | √ | √ | 2 |
| 0270L01232 | Burglar bars Inserts | 3-6 ton | √ | | 18 |
| | **Power Exhaust** | | | | |
| 0270L01167 | Power Exhaust Prop Downflow Economizer, 230 V | 3-6 ton | √ | | 57 |
| 0270L01170 | Power Exhaust Prop Horizontal Economizer, 230 V | 3-6 ton | √ | | 47 |
| 0270L01171 | Power Exhaust Prop Horizontal Economizer, 460 V | 3-6 ton | √ | | 57 |
| 0270L01168 | Power Exhaust Prop Downflow Economizer, 460 V | 3-6 ton | √ | | 47 |
| | **Controls, Thermostats and Sensors** | 3-25 ton | √ | | 1 |
| DT4272C | Comm Touch Digital Stat w/ Wi-Fi 4h/2c | 3-25 ton | √ | | 1 |
| DT4273C | Comm Touch Digital Stat w/ Wi-Fi & Humidity Control 4h/2cc | 3-25 ton | √ | | 1 |
| PSPAC-WS | Remote indoor sensor | 3-25 ton | √ | | 1 |
| 250803400 | AppStat™ RTU 2H/2C Econ | 3-25 ton | √ | | 1 |
| 250803600 | AppStat™ HPU 3H/2C Econ (Heat Pump) | 3-25 ton | √ | | 1 |
| D4271C | 4h/2c Commercial 7day Programmable Wi-Fi Capable thermostat | 3-25 ton | √ | | 1 |
| D4272C | 4h/2c Commercial 7day Programmable Wi-Fi Capable Hum/dehum thermostat | 3-25 ton | √ | | 1 |
| C7232A1024 | $CO_2$ Sensor (Wall Mtd) | 3-25 ton | √ | | 1 |
| C7232B1022 | $CO_2$ Sensor (Duct Mtd) | 3-25 ton | √ | | 1 |
| D2270C | Mini Wi-Fi Thermostat | 3-25 ton | √ | | 1 |
| TSTATD2152-2 | Value Series 2h/1c 5+2 prgm (Heat Pump) | 3-25 ton | √ | | 1 |
| TSTATD2100-2 | Value Series 2h/1c No prgm (Heat Pump) | 3-25 ton | √ | | 1 |
| TSTATD1100-2 | Value Series 1h/1c No prgm | 3-25 ton | √ | | 1 |
| TSTATD1152-2 | Value Series 1h/1c 5+2 prgm | 3-25 ton | √ | | 1 |

# Accessories

| Field Accessory part number | Description | Fits Model Sizes | Field-Installed | Factory-Installed | Operating Weight (lbs) |
|---|---|---|---|---|---|
| PSPAC-AW | Add-A-Wire | 3-25 ton | √ | | 1 |
| PSPAC-2W | 2-Wire Kit | 3-25 ton | √ | | 1 |
| PSPAC-OS | Wired Indoor / Outdoor Remote Sensor | 3-25 ton | √ | | 1 |
| PSPAC-DS | Wired Duct Sensor | 3-25 ton | √ | | 1 |
| PSPAC-WFMS | Wireless Wi-Fi Mini Sensor | 3-25 ton | √ | | 1 |
| PSPAC-LR | Lock Ring for Premium Commercial Thermostats | 3-25 ton | √ | | 1 |
| PSPAC-PWF | Wi-Fi Module | 3-25 ton | √ | | 1 |
| PSPAC-WP | Wall Plate- Premium & Value Series | 3-25 ton | √ | | 1 |
| PSPAC-WPT | Wall Plate Color Touch Screen | 3-25 ton | √ | | 1 |
| PSPAC-WPM-S | Wall Plate Premium Mini- Small | 3-25 ton | √ | | 1 |
| PSPAC-WPM-M | Wall Plate Premium Mini- Medium | 3-25 ton | √ | | 1 |
| PSPAC-WPM-L | Wall Plate Premium Mini- Large | 3-25 ton | √ | | 1 |
| C7400S1000 | Differential Enthalpy Sensor | 3-25 ton | √ | | 1 |
| D4120 | Smoke Detector- Duct Mounted | 3-25 ton | √ | | 1 |
| D4120W | Smoke Detector- Watertight | 3-25 ton | √ | | 1 |

**Note:** Where multiple variations are available, the heaviest combination is listed.
Accessories availability may vary.

## Factory Installed Options

- **Non-Powered Convenience Outlet:** A 120V, 15A, GFCI outlet can be installed in the unit making it easier for technicians to service other units once an electrician runs power to the outlet. Outlet shall be factory-installed and internally mounted with easily accessible 120-v female receptacle. Transformer not included for this option. Outlet shall include a field-installed "While-in-Use" cover.
- **High-Static Kit:** Allows for operation in higher static applications.
- **Powered Convenience Outlet:** A 120V, 15A, GFCI outlet can be powered with a step-transformer built into the unit. For use when the unit is not running. When a factory-installed powered convenience outlet is installed in the equipment, the unit MCA (Min. Circuit Ampacity) will increase by 7.5A for 208/230V units; increase by 3.75A for 460V units; and by 3A for 575V units. The MOP (Max. Overcurrent Protection) device must be sized accordingly. Outlet shall be powered from main line power to the rooftop unit. Outlet shall include a field-installed "While-in-Use" cover.
- **Stainless-Steel Heat Exchanger (Gas/Electric units only):** A tubular heat exchanger made of 409-type stainless steel can be installed in the unit.
- **Return Air and/or Supply Air Smoke Detectors:** Return air and/or supply air smoke detectors can be installed in the unit. To safely identify the presence of smoke inside the air conditioning system and shutdown the blower to prevent the smoke to disperse into different zones.
- **Disconnect Switch (non-fused):** A disconnect switch can be installed in the unit with factory wiring complete from the switch to the unit. Please note that for air conditioner and heat pump units, the appropriate electric heat kit must be ordered along with the disconnect switch (non-fused) to be factory-installed. For models with a powered convenience outlet option and a disconnect switch (non-fused) option, the power to the powered convenience outlet will be shut off when the disconnect switch (non-fused) is in the off position. National Electric Code (NEC) and UL approved non-fused switch shall provide unit power shutoff. The switch shall be accessible from outside of the unit and provide local shutdown and lockout capability.
- **Hinged Access Panels:** Allows access to unit's major components. Combined with latches for easy access to control box, compressor, filters and blower motor.
- **Through-the-base electrical connection:** Allows an easy and fast field installation through the unit base pan.
- **Through-the-base gas utility connection:** Allows an easy and fast field installation through the unit base pan.
- **Electromechanical Controls:** Basic controls that include terminal block for unit connectivity to T-Stat.

## Field Installed Options

- **Manual Fresh Air Damper:** Manual damper package shall consist of damper, air inlet screen, and rain hood which can be preset to admit up to 25% outdoor air for year round ventilation.
- **Motorized Fresh Air Damper:** A two-position damper with rain hood and screen provides up to 50% outside air when the indoor fan starts and closes when the indoor fan shuts down. Consist of actuator, damper, air inlet screen, and rain hood. Damper shall close upon indoor (evaporator) fan shutoff and/or loss of power. The damper actuator shall plug into the rooftop unit's wiring harness plug. No hard wiring shall be required.
- **Power Exhaust:** Power exhaust shall be used in conjunction with an integrated economizer. This accessory exhausts return air and may be used in either downflow or horizontal (duct-mounted) applications. Horizontal power exhaust shall be mounted in return ductwork. Power exhaust shall be controlled by economizer controller operation. Exhaust fans shall be energized when dampers open past the 0-100% adjustable setpoint on the economizer control.
- **Horizontal Economizer:** Fully modulating between 0 and 100%, contain seals that meet ASHRAE 90.1 requirements. Includes motor and dampers, minimum position settings, preset linkage, wiring harness with plug, mixed air temperature sensor, and enthalpy control. An optional duct-mounted barometric relief damper is available. An optional return enthalpy sensor is available to provide comparative or differential enthalpy control. Damper blades shall be galvanized steel with composite gears. Plastic or composite blades on intake or return shall not be acceptable. Standard leak rate shall be equipped with dampers not to exceed 2% leakage at 1 in. wg pressure differential. Ultra Low Leak design meets California Title 24 section 140.4 and ASHRAE 90.1 requirements for 4 cfm per sq.ft. on the outside air dampers and 10 cfm per sq. ft. on the return dampers. Shall be designed to close damper(s) during loss-of-power situations with spring return built into motor. Economizer controller shall accept a 2-10 Vdc $CO_2$ sensor input for IAQ/DCV control. In this mode, dampers shall modulate the outdoor air damper to provide ventilation based on the sensor input.
- Economizer controller shall be Honeywell® JADE® W7220 that provides:
  - 2-line LCD interface screen for setup, configuration and troubleshooting.
  - On-board Fault Detection and Diagnostics (FDD) that senses and alerts when the economizer is not operating properly, per California Title 24.
  - Sensor failure loss of communication identification
  - Automatic sensor detection
  - Capabilities for use with multiple-speed indoor fan systems
  - Utilize digital sensors: Dry bulb and Enthalpy
  - Economizer controller shall provide indications when in free cooling mode, in the DCV mode, or the exhaust fan contact is closed.

- **High Altitude Kit (Gas/Electric units):** Can be used in gas/electric units operating at higher altitudes.
- **Barometric relief (only when economizer is installed):** Allows air pressure relief inside the building to maintain a constant interior pressure.
- **LP Conversion Kit (Gas/Electric units):** Allows gas/electric package units to use propane fuel.
- **Roof curbs:** Full perimeter roof curb with exhaust capability providing separate air streams for energy recovery from the exhaust air without supply air contamination. Two different heights 14" and 24", allows proper installation and structure stability. Formed galvanized steel with wood nailer strip and shall be capable of supporting entire unit weight.
- **Concentric duct kits:** Designed to provide a single-point air distribution system with the added benefit of having directional air control.
- **Restraint mounting clips*:*** Allows for installation reinforcement for Hurricane and/or seismic events.
- **$CO_2$ sensor:** Sensor designed to alarm the system when the $CO_2$ levels are outside safe parameters.
- **Flue extension (Gas/Electric units):** Allows the exhaust gas produced by the heat exchanger to be redirected.
- **Burglar Bar Sleeves**: Designed to prevent the access thru the return or supply ducting inside the unit.
- **Downflow square to round adapter 18":** Installed into a recessed portion of the roof curb, the concentric duct adaptor changes the orientation of the ductwork from square to round for applications utilizing that type of ducting system.
- **Side discharge concentric diffuser system:** The Concentric diffuser system is an all in one supply and return duct free arrangement for RTU systems. This system comes with two separate duct connections, one for a supply and another for a return.
- **Remote indoor sensor:** Remote sensor to monitor the temperature on zones away from the main thermostat.
- **Drain pan overflow switch:** Allows the controls to detect and send an alarm when there is an overflow on the drain pan.
- **Freeze stat:** Temperature sensing device that monitors the heat exchange to prevent the coil from freezing.

## Factory and Field Installed Options

- **Downflow Economizer:** Fully modulating between 0 and 100%, contain seals that meet ASHRAE 90.1 requirements. Includes motor and dampers, minimum position settings, a preset linkage, a wiring harness with plug, a mixed air temperature sensor, enthalpy control, and a barometric relief damper. An optional return enthalpy sensor is available to provide comparative or differential enthalpy control. Damper blades shall be galvanized steel with composite gears. Plastic or composite blades on intake or return shall not be acceptable. Standard leak rate shall be equipped with dampers not to exceed 2% leakage at 1 in. wg pressure differential. Ultra Low Leak design meets California Title 24 section 140.4 and ASHRAE 90.1 requirements for 4 cfm per sq.ft. on the outside air dampers and 10 cfm per sq. ft. on the return dampers. Shall be designed to close damper(s) during loss-of-power situations with spring return built into motor. Economizer controller shall accept a 2-10 Vdc $CO_2$ sensor input for IAQ/DCV control. In this mode, dampers shall modulate the outdoor air damper to provide ventilation based on the sensor input. Economizer controller shall be Honeywell® W7220 that provides:
- Economizer controller shall be *Honeywell* W7220 that provides:
  - 2-line LCD interface screen for setup, configuration and troubleshooting.
  - On-board Fault Detection and Diagnostics (FDD) that senses and alerts when the economizer is not operating properly, per California Title 24.
  - Sensor failure loss of communication identification
  - Automatic sensor detection
  - Capabilities for use with multiple-speed indoor fan systems
  - Utilize digital sensors: Dry bulb and Enthalpy
  - Economizer controller shall provide indications when in free cooling mode, in the DCV mode, or the exhaust fan contact is closed.
- **Low Ambient Control:** Allows cooling operation down to 35°F outdoor ambient temperature for 3 - 6 ton units.
- **Phase Monitor:** Phase monitor (3-Phase only) shall provide protection for motors and compressors against problems caused by phase loss, phase reversal and phase unbalance. Phase monitor is equipped with an LED that provides an ON or FAULT indicator.
- **Condenser Hail Guards:** Louvered metal guards help protect the condenser coil from hail and debris; available as a field-installed options on 3 – 12½ ton units.

Our continuing commitment to quality products may mean a change in specifications without notice.
© 2021 ***DAIKIN MANUFACTURING COMPANY, L.P.*** • Houston, Texas • Printed in the USA.