DAIKIN
AIR INTELLIGENCE

DBG Commercial

Base Efficiency Gas/Electric Belt-Drive Packaged Rooftop Unit DBG Commercial 3-5 Nominal Tons

14 SEER / 11.5 EER

20 YEAR HEAT EXCHANGER LIMITED WARRANTY*

5 YEAR PARTS LIMITED WARRANTY*

ETL LISTED C US Intertek

AHRI CERTIFIED www.ahridirectory.org Unitary Small AC AHRI Standard 210/240

ISO 9001 QUALITY MANAGEMENT SYSTEM GLOBAL QUALITY STANDARDS

ISO 14001 CERTIFIED ENVIRONMENTAL MANAGEMENT SYSTEM

*Complete warranty details available from your local distributor or manufacturer's representative or at www.daikincomfort.com or www.daikinac.com

Supersedes 03/20A

Our Perfect Package:

Harnessing energy-efficient performance, proven technology, and enhanced comfort for life.

Since becoming the first company in Japan to manufacture packaged air conditioning systems, in 1951, Daikin has supported comfortable indoor living based on the strengths and technologies that have led to the growth of the company becoming one of the world's largest manufacturers of HVAC products, systems and refrigerants.

Today, as a comprehensive global manufacturer of HVAC products and systems, the Daikin brand is committed to being recognized as a truly global and excellent company capable of continually creating new value for its customers. The company plans to pursue sustainable growth and foster business operations that consistently harmonize with the goals of improving indoor comfort.

The group philosophy of the company includes:

- Creating new value continuously for customers
- Developing world leading energy-saving technology
- Being a flexible and dynamic organization
- Allowing employees to be the driving force for the success of the company
- Fostering an atmosphere of best practices, boldness, and innovation
- Thinking and acting globally

Contents

2	**Introduction**	2
4	**Nomenclature**	4
5	**Features and Benefits**	5
	Applications	8
	Serviceability	8
9	**Product Specifications**	9
	AHRI Ratings	11
	Sound Data	11
	Expanding Cooling Data	12
	Heating Data	24
	Air Flow	26
	Electrical Data	32
	Wiring Diagrams	34
35	**Dimensional Data**	35
36	**Electrical Connections**	36
	Unit Clearances	36
	Installation	37
	Weights	37
38	**Accessories**	38
40	**Factory Installed Options**	40
41	**Field Installed Options**	41
41	**Factory and Field Installed Options**	41

Nomenclature

D	B	G	036	3	B	045	A	A	A	X	X	X	X	X	X	X	X	A	*
1	2	3	4,5,6	7	8	9,10,11	12	13	14	15	16	17	18	19	20	21	22	23	24

Revision Levels
Major & Minor

Brand
D Daikin

Configuration
B New Base Efficiency

Application
C Cooling
G Gas Heat
H Heat Pump

Nominal Cooling Capacity
036 3 Tons
048 4 Tons
060 5 Tons

Voltage
3 208-230/3/60
4 460/3/60
7 575/3/60

Supply Fan/Drive Type/Motor
B Belt Drive - Standard Static
C Belt Drive - High Static

Nominal Heating Capacity

Gas/Electric	A/C Factory-Installed Electric Heat	
045 45,000 BTU/h	XXX	No Heat
070 70,000 BTU/h	005	5kW
115 115,000 BTU/h	010	10 kW
125 125,000 BTU/h	015	15 kW
140 140,000 BTU/h	018	18 kW
	020	20 kW
	030	30 kW

See product specifications for heat size(s) available for each capacity.

Refrigeration Systems
A Single stage cooling modes

Heat Exchanger
X No options
A Standard Aluminized Exchanger
S Stainless Steel Exchanger

Controls
A Electro-mechanical controls

Sensors
X No Options
A RA Smoke Detector
B SA Smoke Detector
C RA & SA Smoke Detector

Hail guard
X No Options
C Hail Guard

Economizer
X No Options
A Ultra Low-Leak Downflow Economizer w/Enthalpy Sensor
B Low-Leak Downflow Economizer w/Enthalpy Sensor
G Ultra Low-Leak Downflow Economizer w/Dry Bulb Sensor
H Low-Leak Downflow Economizer w/Dry Bulb Sensor

Electrical
X No Options
A Non-Fused Disconnect
B Phase Monitor
C Thru-the-base connections
E Non-Fused Disconnect and Phase Monitor
F Non-Fused Disconnect and Thru-the-base connectons
H Phase Monitor and Thru-the-base connections
L Non-Fused Disconnect, Thru-the-base connectons and Phase Monitor

Service Options
X No Option
A Powered convenience outlet
B Non-powered convenience outlet
C Hinge Panels
D Hinged Panels and Powered convenience outlet
E Hinged Panels and non-powered convenience outlet

X No Options

Power Exhaust
X No Options
B Single point power connection for Power Exhaust

X No Options

G/E Stocking Models

New Daikin 3-5 Ton Belt Drive

Model Number	Code String	Model Number	Code String	Model Number	Code String
DBG0363BL00001S	DBG0363B045AAAXXXXXXXXAA	DBG0603BL00001S	DBG0603B090AAAXXXXXXXXAA	DBG0483CH00001F	DBG0483C115AAAXXXXXXXXAA
DBG0363BM00001S	DBG0363B070AAAXXXXXXXXAA	DBG0603BM00001S	DBG0603B115AAAXXXXXXXXAA	DBG0483CL00001F	DBG0483C070AAAXXXXXXXXAA
DBG0363BH00001S	DBG0363B090AAAXXXXXXXXAA	DBG0603BH00001S	DBG0603B140AAAXXXXXXXXAA	DBG0483CM00001F	DBG0483C090AAAXXXXXXXXAA
DBG0364BL00001S	DBG0364B045AAAXXXXXXXXAA	DBG0604BL00001S	DBG0604B090AAAXXXXXXXXAA	DBG0484CH00001F	DBG0484C115AAAXXXXXXXXAA
DBG0364BM00001S	DBG0364B070AAAXXXXXXXXAA	DBG0604BM00001S	DBG0604B115AAAXXXXXXXXAA	DBG0484CL00001F	DBG0484C070AAAXXXXXXXXAA
DBG0364BH00001S	DBG0364B090AAAXXXXXXXXAA	DBG0604BH00001S	DBG0604B140AAAXXXXXXXXAA	DBG0484CM00001F	DBG0484C090AAAXXXXXXXXAA
DBG0367BH00001S	DBG0367B090AAAXXXXXXXXAA	DBG0607BH00001S	DBG0607B140AAAXXXXXXXXAA	DBG0487CH00001F	DBG0487C115AAAXXXXXXXXAA
DBG0483BL00001S	DBG0483B070AAAXXXXXXXXAA	DBG0363CH00001F	DBG0363C090AAAXXXXXXXXAA	DBG0603CH00001F	DBG0603C140AAAXXXXXXXXAA
DBG0483BM00001S	DBG0483B090AAAXXXXXXXXAA	DBG0363CL00001F	DBG0363C045AAAXXXXXXXXAA	DBG0603CL00001F	DBG0603C090AAAXXXXXXXXAA
DBG0483BH00001S	DBG0483B115AAAXXXXXXXXAA	DBG0363CM00001F	DBG0363C070AAAXXXXXXXXAA	DBG0603CM00001F	DBG0603C115AAAXXXXXXXXAA
DBG0484BL00001S	DBG0484B070AAAXXXXXXXXAA	DBG0364CH00001F	DBG0364C090AAAXXXXXXXXAA	DBG0604CH00001F	DBG0604C140AAAXXXXXXXXAA
DBG0484BM00001S	DBG0484B090AAAXXXXXXXXAA	DBG0364CL00001F	DBG0364C045AAAXXXXXXXXAA	DBG0604CL00001F	DBG0604C090AAAXXXXXXXXAA
DBG0484BH00001S	DBG0484B115AAAXXXXXXXXAA	DBG0364CM00001F	DBG0364C070AAAXXXXXXXXAA	DBG0604CM00001F	DBG0604C115AAAXXXXXXXXAA
DBG0487BH00001S	DBG0487B115AAAXXXXXXXXAA	DBG0367CH00001F	DBG0367C090AAAXXXXXXXXAA	DBG0607CH00001F	DBG0607C140AAAXXXXXXXXAA

Daikin Packaged Rooftop Units are built to perform, with features and options that help provide lower installation and operating costs, superior indoor air quality, quiet operation, and longevity.

Installation

Daikin Packaged units are designed with an easier and faster installation in mind for both new construction and retrofit. Our packaged rooftop units are built to be a direct replacement for most rooftop units on the field without the need of a curb adapter, to be able to replace the unit in a shorter time and at a lower expense.

Cabinet Construction

Daikin packaged rooftop units are made with high quality galvanized steel with a powder-paint finish to provide higher corrosion resistance.

» Easy accessibility using our tool-less filter access (available on small chassis).

» The interior surface in the indoor air section is fully insulated to prevent sweating and thermal losses, using our foil face fiberglass insulation which also omits exposed filter fibers into the airstream.

» 1" Raised flanged edges around the supply and return offer easier installation for the duct connections.

» The full perimeter base rail is built using heavy gauge galvanized steel for a stronger structural installation. The base rails are a minimum of 3 ½" tall and include holes to allow for overhead rigging and lifting with forklifts.

» Electrical lines and gas lines can be brought through the base of the unit or through the horizontal knockout for easier installation and accessibility on the field.

Compressor

High performance, low noise scroll compressors to match the required total load for efficient part load control.

» Resiliently factory-mounted on rubber grommets for vibration isolation

» Refrigeration circuit includes both a low and high pressure transducer, high pressure safety switch and temperature sensors for the suction and discharge lines.

» Unit is factory charged with environmental friendly and sustainable R-410A refrigerant.

» Compressor location outside the condenser section to avoid air bypass.

» Internal overload protection included with compressor.

Supply Fan

Indoor fan motors are belt drive as standard to provide easy in the field belt and pulley adjustment for airflow control.

» Slide out forward curb fan for easier maintenance and replacement.

» High static drive options for application with high airflow/static requirements.

» Each fan assembly is dynamically trim balanced at the factory before shipment for quick start up and efficient operation.

» Motor with thermal overload and phase failure protection is provided for motor long lasting operation.

Coils

All units use large face area outdoor coils. These coils are constructed with seamless copper tubes, mechanically bonded into aluminum plate-type fins with full drawn collars to completely cover the tubes for high operating efficiencies.

The indoor coil section is installed in a draw through configuration to provide better dehumidification.

» Coils are factory pressure tested to ensure pressure and leak integrity.

» High and low pressure switches to be factory installed as fittings instead of brazed for easy removal and replacement.

» Copper tube / aluminum fin coils on condenser and evaporator

» 5mm Smart Coil Technology on all condenser coils for improved performance and reduced refrigerant load.

Controls and Wiring

Packaged rooftop units come equipped with a well-organized, large, easy to use, weather proof internal control box with easy access, for a better user experience.

» Units are factory-wired with labeled color-coded wires and complete 24-volt electro-mechanical controls package.

» Terminal blocks are provided as standard for easier installation and field power wiring.

Filtration

Unit provides a draw-through filter section as standard for better air quality and longer lasting component maintenance.

» Filters installed on the units are standard off the shelf sizes for easy replacement.

» One size filter per unit for lower maintenance cost and easy replacement.

» Easy and fast filter service access.

Heating Section

Wide range of natural gas selections effectively handle most comfort heating demand from morning warm-up control to full heat, all available with Daikin's Wrinkle Bend heat exchanger technology.

Gas Furnace

ETL certified heating modules provide a custom match to specific design requirement.

» Wrinkle Bend Technology available on all Daikin gas heat exchangers. The Wrinkle Bend Technology reduces the manufacturing stress that leads to defects and pinholes in the tubes at the same time as it increases the gas turbulence to amplify the heat transfer.

» All single phase 3-5 ton Gas units have 80% AFUE.

» All 3-Phase models have a minimum 80% T.E. (Thermal Efficiency)

» User has the flexibility to order heat exchanger tubes with 20 Gauge, G160, aluminized steel or stainless steel to meet your application needs.

» The furnace has a tubular design with in-shot gas burner manifold and is installed downstream of the supply fan.

» The module contains an induced draft fan that will maintain a negative pressure in the heat exchanger tubes for the removal of the flue gases to protect indoor air quality.

» Each burner module provides flame roll-out safety protection switches and a high temperature limit switch for reliable operation.

» Induced draft fan includes an airflow safety switch to prevent heating operation in the event of no airflow for occupant safety.

» All burner assemblies are factory tested and adjusted prior to shipment.

» Heating control is fully integrated into the unit's control system for quick startup and reliable control.

» Optional field installed LP kits are available for staged heating modules as well as high altitude kits.

Electrical

Units are completely wired and tested at the factory to provide faster commissioning and start-up.

» Wiring complies with NEC requirements and all applicable UL standards.

» For ease of use, wiring and electrical components are number coded and labeled according to the electrical diagram.

» A 115 V GFI convenience outlet requiring independent power supply for the receptacle is optional.

» An optional unit powered 20 amp 115 V convenience outlet, complete with factory mounted transformer, disconnect switch, and primary and secondary overload protection, eliminates the need to pull a separate 115 V power source.

» Supply air fan, compressor, and condenser fan motor branch circuits have individual short circuit protection. Unit includes knockouts in the bottom of the main control panels for field wiring entrance.

» A single point power connection with power block is standard and a terminal board is provided for connecting low voltage control wiring.

» For better serviceability an optional non-fused disconnect switch can be installed inside the control panel and operated by an externally mounted handle to disconnect the electrical power at the unit.

DAIKIN

Applications

Daikin Rooftop units are intended for comfort cooling applications in normal heating, ventilating, and air conditioning. Consult your local Daikin sales representative for applications involving operations at high ambient temperatures, high altitudes, non-cataloged voltages, or for job specific unit selections that fall outside of the range of the catalog tables.

For proper operation, units should be rigged in accordance with instructions stated on the installation manual. Fire dampers, if required, must be installed in the ductwork according to local and/or state codes. No space is allowed for these dampers in the unit.

Follow factory check, test and start procedures explicitly to achieve satisfactory start-up and operation.

Most rooftop applications take advantage of the significant energy savings provided with economizer operation. When an economizer system is used, mechanical refrigeration is typically not required below an ambient temperature of 50°F.

Serviceability

Daikin packaged rooftop units are built with serviceability in mind, designed to make future maintenance and service on the unit easier and more accessible.

- Our packaged rooftop units offer a slide out blower to facilitate the access and removal of the fan.
- Filter panels on the small chassis line offer tool less access for easy maintenance.
- Independent compressor outside of the air bypass to eliminate component blockage and provide easy access.
- Labeled field connections, color coded and continuously marked wire to identify point-to-point component connections.
- All 3 - 5 ton units are designed for convertible airflow orientation to serve downflow or horizontal applications. Every unit ships prepared to convert to horizontal orientation in the field if required.
- Condenser clean out from inside-out.
- Easy access to gas valves and control panel.

Model	DBG0363BL00001S	DBG0363BM00001S	DBG0363BH00001S	DBG0364BL00001S	DBG0364BM00001S	DBG0364BH00001S	DBG0367BH00001S
COOLING CAPACITY							
Total, BTU/h	35,000	35,000	35,000	35,000	35,000	35,000	35,000
SEER / EER	14.0/11.5	14.0/11.5	14.0/11.5	14.0/11.5	14.0/11.5	14.0/11.5	14.0/11.5
HEATING CAPACITY							
Heat Range	Low	Medium	High	Low	Medium	High	High
No. of Burners	2	3	5	2	3	5	5
High Stage Input / Output (KBTU/H)	45.0/36.0	70.0/56.0	90.0/72.0	45.0/36.0	70.0/56.0	90.0/72.0	90.0/72.0
Low Stage Input / Output (KBTU/H)	33.7/27.0	52.5/42.0	67.5/54.0	33.7/27.0	52.5/42.0	67.5/54.0	67.5/54.0
Thermal Efficiency (T.E.)	80	80	80	80	80	80	80
Annual Fuel Utilization Efficiency (AFUE)	--	--	--	--	--	--	--
High Stage Temperature Rise Range (°F)	15 - 45	25 - 55	45 - 75	15 - 45	25 - 55	45 - 75	45 - 75
Low Stage Temperature Rise Range (°F)	10 - 40	20 - 50	40 - 70	10 - 40	20 - 50	40 - 70	40 - 70
EVAPORATOR MOTOR COIL							
Motor Type	Belt Drive	Belt Drive	Belt Drive	Belt Drive	Belt Drive	Belt Drive	Belt Drive
External Static Pressure (ESP)	Standard	Standard	Standard	Standard	Standard	Standard	Standard
Wheel Dia. X Width	12x10	12x10	12x10	12x10	12x10	12x10	12x10
Indoor Nominal CFM	1160	1160	1160	1160	1160	1160	1160
RPM	1725	1725	1725	1725	1725	1725	1725
Indoor Horsepower	1.00	1.00	1.00	1.00	1.00	1.00	1.50
Filter Size (in)	20 X 25 X 2 (2)	20 X 25 X 2 (2)	20 X 25 X 2 (2)	20 X 25 X 2 (2)	20 X 25 X 2 (2)	20 X 25 X 2 (2)	20 X 25 X 2 (2)
Drain Size (NPT)	3/4	3/4	3/4	3/4	3/4	3/4	3/4
R-410A Refrigerant Charge (oz.)	99	99	99	99	99	99	99
Evaporator Coil Face Area (ft^2)	6.4	6.4	6.4	6.4	6.4	6.4	6.4
Rows Deep/ Fins per Inch	4 / 16	4 / 16	4 / 16	4 / 16	4 / 16	4 / 16	4 / 16
CONDENSER FAN/COIL							
Quantity of Condenser Fan Motors	1	1	1	1	1	1	1
RPM (High/Low stage)	810	810	810	810	810	810	810
Outdoor Horsepower	0.17	0.17	0.17	0.17	0.17	0.17	0.17
Fan Diameter/ # Fan Blades	22 / 3	22 / 3	22 / 3	22 / 3	22 / 3	22 / 3	22 / 3
Face Area (ft^2)	12.5	12.5	12.5	12.5	12.5	12.5	12.5
Rows Deep / Fins per Inch	2 / 28	2 / 28	2 / 28	2 / 28	2 / 28	2 / 28	2 / 28
COMPRESSOR (ALL SINGLE-STAGE)							
Quantity / Type / Stages	1 / Scroll / 1	1 / Scroll / 1	1 / Scroll / 1	1 / Scroll / 1	1 / Scroll / 1	1 / Scroll / 1	1 / Scroll / 1
Compressor RLA / LRA	10.4 / 73.0	10.4 / 73.0	10.4 / 73.0	5.8 / 38	5.8 / 38	5.8 / 38	3.8 / 36
ELECTRICAL DATA							
Voltage-Phase-Frequency	208/230-3-60	208/230-3-60	208/230-3-60	460-3-60	460-3-60	460-3-60	575--3-60
Indoor Blower FLA	3.4	3.4	3.4	1.7	1.7	1.7	2.3
Max External Static (In. W.C.)	0.7	0.7	0.7	0.7	0.7	0.7	0.7
Outdoor Fan FLA	0.95	0.95	0.95	0.48	0.48	0.48	0.39
Min. Circuit Ampacity[1]	17.4/17.4	17.4/17.4	17.4/17.4	9.39	9.39	9.39	7.42
Max. Overcurrent Protection (A)[2]	25/25	25/25	25/25	15	15	15	15
Power Supply Conduit Hole Dia. (in)	1.125	1.125	1.125	1.125	1.125	1.125	1.125
Low-Voltage Conduit Hole Dia. (in)	0.5	0.5	0.5	0.5	0.5	0.5	0.5
OPERATING WEIGHT (LBS.)							
Operating Weight (lbs)	586	599	608	586	599	608	608
SHIPPING WEIGHT (LBS.)							
Ship Weight (lbs)	632	645	654	632	645	654	654

[1] Wire size should be determined in accordance with National Electrical Codes. Extensive wire runs will require larger wire sizes.
[2] May use fuses or HACR-type circuit breakers of the same size as noted.
Note: Always check the S&R plate for electrical data on the unit being installed.

Model	DBG0483BL00001S	DBG0483BM00001S	DBG0483BH00001S	DBG0484BL00001S	DBG0484BM00001S	DBG0484BH00001S	DBG0487BH00001S
COOLING CAPACITY							
Total, BTU/h	46,500	46,500	46,500	46,500	46,500	46,500	46,500
SEER / EER	14.0/11.5	14.0/11.5	14.0/11.5	14.0/11.5	14.0/11.5	14.0/11.5	14.0/11.5
HEATING CAPACITY							
Heat Range	Low	Medium	High	Low	Medium	High	High
No. of Burners	3	4	5	3	4	5	5
High Stage Input / Output (KBTU/H)	70.0/56.0	90.0/72.0	115.0/92.0	70.0/56.0	90.0/72.0	115.0/92.0	115.0/92.0
Low Stage Input / Output (KBTU/H)	52.5/42.0	67.5/54.0	86.3/69.0	52.5/42.0	67.5/54.0	86.3/69.0	86.3/69.0
Thermal Efficiency (T.E.)	80	80	80	80	80	80	80
Annual Fuel Utilization Efficiency (AFUE)	--	--	--	--	--	--	--
High Stage Temperature Rise Range (°F)	20 - 50	30 - 60	40 - 70	20 - 50	30 - 60	40 - 70	40 - 70
Low Stage Temperature Rise Range (°F)	15 - 45	25 - 55	35 - 65	15 - 45	25 - 55	35 - 65	35 - 65
EVAPORATOR MOTOR COIL							
Motor Type	Belt Drive	Belt Drive	Belt Drive	Belt Drive	Belt Drive	Belt Drive	Belt Drive
External Static Pressure (ESP)	Standard	Standard	Standard	Standard	Standard	Standard	Standard
Wheel Dia. X Width	12x10	12x10	12x10	12x10	12x10	12x10	12x10
Indoor Nominal CFM	1470	1470	1470	1470	1470	1470	1470
RPM	1725	1725	1725	1725	1725	1725	1725
Indoor Horsepower	1.0	1.0	1.0	1.0	1.0	1.0	1.5
Filter Size (in)	20 X 25 X 2 (2)	20 X 25 X 2 (2)	20 X 25 X 2 (2)	20 X 25 X 2 (2)	20 X 25 X 2 (2)	20 X 25 X 2 (2)	20 X 25 X 2 (2)
Drain Size (NPT)	3/4	3/4	3/4	3/4	3/4	3/4	3/4
R-410A Refrigerant Charge (oz.)	108	108	108	108	108	108	108
Evaporator Coil Face Area (ft^2)	6.4	6.4	6.4	6.4	6.4	6.4	6.4
Rows Deep/ Fins per Inch	4 / 16	4 / 16	4 / 16	4 / 16	4 / 16	4 / 16	4 / 16
CONDENSER FAN/COIL							
Quantity of Condenser Fan Motors	1	1	1	1	1	1	1
RPM (High/Low stage)	1075	1075	1075	1075	1075	1075	1075
Outdoor Horsepower	0.25	0.25	0.25	0.25	0.25	0.25	0.25
Fan Diameter/ # Fan Blades	22 / 4	22 / 4	22 / 4	22 / 4	22 / 4	22 / 4	22 / 4
Face Area (ft^2)	13.3	13.3	13.3	13.3	13.3	13.3	13.3
Rows Deep / Fins per Inch	2 / 28	2 / 28	2 / 28	2 / 28	2 / 28	2 / 28	2 / 28
COMPRESSOR (ALL SINGLE-STAGE)							
Quantity / Type / Stages	1 / Scroll / 1	1 / Scroll / 1	1 / Scroll / 1	1 / Scroll / 1	1 / Scroll / 1	1 / Scroll / 1	1 / Scroll / 1
Compressor RLA / LRA	13.1 / 83.1	13.1 / 83.1	13.1 / 83.1	6.1 / 41	6.1 / 41	6.1 / 41	4.4 / 33
ELECTRICAL DATA							
Voltage-Phase-Frequency	208/230-3-60	208/230-3-60	208/230-3-60	460-3-60	460-3-60	460-3-60	575--3-60
Indoor Blower FLA	3.4	3.4	3.4	1.7	1.7	1.7	2.3
Max External Static (In. W.C.)	0.7	0.7	0.7	0.7	0.7	0.7	0.7
Outdoor Fan FLA	1.4	1.4	1.4	0.7	0.7	0.7	0.55
Min. Circuit Ampacity[1]	21.2/21.2	21.2/21.2	21.2/21.2	10	10	10	8.3
Max. Overcurrent Protection (A)[2]	30/30	30/30	30/30	15	15	15	15
Power Supply Conduit Hole Dia. (in)	1.125	1.125	1.125	1.125	1.125	1.125	1.125
Low-Voltage Conduit Hole Dia. (in)	0.5	0.5	0.5	0.5	0.5	0.5	0.5
OPERATING WEIGHT (LBS.)							
Operating Weight (lbs)	631	637	644	631	637	644	644
SHIPPING WEIGHT (LBS.)							
Ship Weight (lbs)	677	683	690	677	683	690	690

[1] Wire size should be determined in accordance with National Electrical Codes. Extensive wire runs will require larger wire sizes.
[2] May use fuses or HACR-type circuit breakers of the same size as noted.
Note: Always check the S&R plate for electrical data on the unit being installed.

Model	DBG0603BL00001S	DBG0603BM00001S	DBG0603BH00001S	DBG0604BL00001S	DBG0604BM00001S	DBG0604BH00001S	DBG0607BH00001S
COOLING CAPACITY							
Total, BTU/h	57,000	57,000	57,000	57,000	57,000	57,000	57,000
SEER / EER	14.0/11.5	14.0/11.5	14.0/11.5	14.0/11.5	14.0/11.5	14.0/11.5	14.0/11.5
HEATING CAPACITY							
Heat Range	Low	Medium	High	Low	Medium	High	High
No. of Burners	4	5	6	4	5	6	6
High Stage Input / Output (KBTU/H)	90.0/72.0	115.0/92.0	140.0/112.0	90.0/72.0	115.0/92.0	140.0/112.0	140.0/112.0
Low Stage Input / Output (KBTU/H)	67.5/54.0	86.3/69.0	105.0/84.0	67.5/54.0	86.3/69.0	105.0/84.0	105.0/84.0
Thermal Efficiency (T.E.)	80	80	80	80	80	80	80
Annual Fuel Utilization Efficiency (AFUE)	--	--	--	--	--	--	--
High Stage Temperature Rise Range (°F)	25 - 55	35 - 65	45 - 75	25 - 55	35 - 65	45 - 75	45 - 75
Low Stage Temperature Rise Range (°F)	20 - 50	30 - 60	40 - 70	20 - 50	30 - 60	40 - 70	40 - 70
EVAPORATOR MOTOR COIL							
Motor Type	Belt Drive	Belt Drive	Belt Drive	Belt Drive	Belt Drive	Belt Drive	Belt Drive
External Static Pressure (ESP)	Standard	Standard	Standard	Standard	Standard	Standard	Standard
Wheel Dia. X Width	12x10	12x10	12x10	12x10	12x10	12x10	12x10
Indoor Nominal CFM	1640	1640	1640	1640	1640	1640	1640
RPM	1760	1760	1760	1760	1760	1760	1760
Indoor Horsepower	1.0	1.0	1.0	1.0	1.0	1.0	1.0
Filter Size (in)	20 X 25 X 2 (2)	20 X 25 X 2 (2)	20 X 25 X 2 (2)	20 X 25 X 2 (2)	20 X 25 X 2 (2)	20 X 25 X 2 (2)	20 X 25 X 2 (2)
Drain Size (NPT)	3/4	3/4	3/4	3/4	3/4	3/4	3/4
R-410A Refrigerant Charge (oz.)	111	111	111	111	111	111	111
Evaporator Coil Face Area (ft^2)	6.4	6.4	6.4	6.4	6.4	6.4	6.4
Rows Deep/ Fins per Inch	4 / 16	4 / 16	4 / 16	4 / 16	4 / 16	4 / 16	4 / 16
CONDENSER FAN/COIL							
Quantity of Condenser Fan Motors	1	1	1	1	1	1	1
RPM (High/Low stage)	1122	1122	1122	1050	1050	1050	1050
Outdoor Horsepower	0.33	0.33	0.33	0.33	0.33	0.33	0.33
Fan Diameter/ # Fan Blades	22 / 3	22 / 3	22 / 3	22 / 3	22 / 3	22 / 3	22 / 3
Face Area (ft^2)	17.1	17.1	17.1	17.1	17.1	17.1	17.1
Rows Deep / Fins per Inch	2 / 28	2 / 28	2 / 28	2 / 28	2 / 28	2 / 28	2 / 28
COMPRESSOR (ALL SINGLE-STAGE)							
Quantity / Type / Stages	1 / Scroll / 1	1 / Scroll / 1	1 / Scroll / 1	1 / Scroll / 1	1 / Scroll / 1	1 / Scroll / 1	1 / Scroll / 1
Compressor RLA / LRA	15.9 / 110.0	15.9 / 110.0	15.9 / 110.0	7.1 / 52	7.1 / 52	7.1 / 52	5.1 / 39.5
ELECTRICAL DATA							
Voltage-Phase-Frequency	208/230-3-60	208/230-3-60	208/230-3-60	460-3-60	460-3-60	460-3-60	575--3-60
Indoor Blower FLA	3.2	3.2	3.2	1.5	1.5	1.5	1.2
Max External Static (In. W.C.)	0.8	0.8	0.8	0.8	0.8	0.8	0.8
Outdoor Fan FLA	2	2	2	0.85	0.85	0.85	0.67
Min. Circuit Ampacity[1]	25.1/25.1	25.1/25.1	25.1/25.1	11.2	11.2	11.2	12.3
Max. Overcurrent Protection (A)[2]	40/40	40/40	40/40	15	15	15	15
Power Supply Conduit Hole Dia. (in)	1.125	1.125	1.125	1.125	1.125	1.125	1.125
Low-Voltage Conduit Hole Dia. (in)	0.5	0.5	0.5	0.5	0.5	0.5	0.5
OPERATING WEIGHT (LBS.)							
Operating Weight (lbs)	663	663	670	663	663	670	670
SHIPPING WEIGHT (LBS.)							
Ship Weight (lbs)	709	709	716	709	709	716	716

[1] Wire size should be determined in accordance with National Electrical Codes. Extensive wire runs will require larger wire sizes.
[2] May use fuses or HACR-type circuit breakers of the same size as noted.
Note: Always check the S&R plate for electrical data on the unit being installed.

AHRI Ratings

MODEL	CAPACITY	EER	SEER
DBG036*B	35,000	11.5	14
DBG048*B	46,500	11.5	14
DBG060*B	57,000	11.5	14

Sound Data

Model	Outdoor sound (dB) at 60 Hz								
	A-Weighted	63	125	250	500	1000	2000	4000	8000
036	75	78.5	85.4	74.4	71.8	69.1	65.8	60.9	59.2
048	73	82.5	78.1	71.6	69.5	68.0	66.1	59.5	58.6
060	76	84.4	80.5	76.2	72.9	70.9	67.4	63.8	63.1

Notes:
[1] Outdoor sound data is measued in accordance with AHRI standard 270.
[2] Measurements are expressed in terms of sound power. Do not compare these values to sound pressure values because sound pressure depends on specific environment factors which normally do not match individual applications. Sound power values are independent of the environment and therefore more accurate.
[3] A-weighted sound ratings filter out high and very low frequencies, to better approximate the response of "average" human ear. A-weighted measurements for Daikin units are taken in accordance with AHRI standard 270.

			Outdoor Ambient Temperature																							
			65				75				85				95				105				115			
			Entering Indoor Wet Bulb Temperature																							
IDB	Airflow	ID WB	59	63	67	71	59	63	67	71	59	63	67	71	59	63	67	71	59	63	67	71	59	63	67	71
70	900	Capacity	35,290	35,793	36,856	–	34,971	35,474	36,538	–	34,041	34,544	35,608	–	32,441	32,944	34,008	–	30,486	30,989	32,053	–	28,701	29,204	30,268	–
		S/T	0.52	0.45	0.32	–	0.53	0.45	0.32	–	0.55	0.48	0.35	–	0.57	0.50	0.37	–	1.00	0.52	0.39	–	1.00	0.57	0.44	–
		Evap dT	21.99	20.06	16.46	–	21.94	20.01	16.41	–	22.21	20.28	16.68	–	21.92	19.99	16.39	–	21.66	19.73	16.13	–	22.87	20.94	17.34	–
		Pr Suc	123	124	127	–	130	132	135	–	137	138	141	–	142	144	147	–	148	149	153	–	155	156	159	–
		Pr Dis	254	255	257	–	294	295	297	–	337	338	339	–	382	383	385	–	431	432	434	–	484	485	486	–
		TotalPower	2,136	2,134	2,129	–	2,393	2,391	2,387	–	2,681	2,679	2,675	–	2,993	2,991	2,986	–	3,341	3,339	3,334	–	3,749	3,747	3,742	–
	1160	Capacity	36,076	36,579	37,643	–	35,758	36,260	37,324	–	34,828	35,331	36,394	–	33,228	33,731	34,795	–	31,273	31,776	32,839	–	29,488	29,991	31,055	–
		S/T	0.65	0.57	0.44	–	0.66	0.58	0.45	–	0.68	0.61	0.47	–	1.00	0.62	0.49	–	1.00	0.65	0.51	–	1.00	0.70	0.56	–
		Evap dT	19.69	17.76	14.16	–	19.64	17.71	14.11	–	19.91	17.98	14.38	–	19.62	17.69	14.09	–	19.36	17.43	13.83	–	20.57	18.64	15.04	–
		Pr Suc	126	127	131	–	133	135	138	–	140	142	145	–	146	147	150	–	151	153	156	–	158	159	163	–
		Pr Dis	258	259	261	–	298	299	301	–	341	342	344	–	386	387	389	–	435	436	438	–	488	489	491	–
		TotalPower	2,162	2,160	2,156	–	2,420	2,418	2,413	–	2,708	2,706	2,701	–	3,019	3,017	3,013	–	3,367	3,365	3,361	–	3,775	3,773	3,769	–
	1350	Capacity	36,835	37,337	38,401	–	36,516	37,019	38,082	–	35,586	36,089	37,153	–	33,986	34,489	35,553	–	32,031	32,534	33,598	–	30,246	30,749	31,813	–
		S/T	0.69	0.61	0.48	–	0.69	0.62	0.49	–	0.72	0.64	0.51	–	1.00	0.66	0.53	–	1.00	0.68	0.55	–	1.00	0.73	0.60	–
		Evap dT	18.43	16.50	12.90	–	18.38	16.45	12.85	–	18.65	16.72	13.12	–	18.36	16.43	12.83	–	18.10	16.17	12.57	–	19.31	17.38	13.78	–
		Pr Suc	129	130	133	–	136	138	141	–	143	144	147	–	148	150	153	–	154	155	158	–	161	162	165	–
		Pr Dis	261	262	264	–	301	302	304	–	343	344	346	–	389	390	392	–	438	439	441	–	490	491	493	–
		TotalPower	2,176	2,174	2,170	–	2,434	2,432	2,428	–	2,722	2,720	2,716	–	3,033	3,031	3,027	–	3,381	3,379	3,375	–	3,790	3,788	3,783	–
75	900	Capacity	35,311	35,813	36,877	38,502	34,992	35,495	36,558	38,183	34,062	34,565	35,629	37,253	32,462	32,965	34,029	35,654	30,507	31,010	32,074	33,699	28,722	29,225	30,289	31,914
		S/T	0.65	0.57	0.44	0.30	0.65	0.58	0.45	0.31	1.00	0.60	0.47	0.33	1.00	0.62	0.49	0.35	1.00	0.64	0.51	0.37	1.00	1.00	0.56	0.42
		Evap dT	26.23	24.30	20.70	16.97	26.18	24.25	20.65	16.92	26.45	24.52	20.92	17.19	26.16	24.23	20.63	16.90	25.90	23.97	20.37	16.64	27.11	25.18	21.58	17.85
		Pr Suc	123	124	127	133	130	132	135	140	137	138	141	147	142	144	147	152	148	149	153	158	155	156	159	165
		Pr Dis	254	255	257	261	294	296	297	302	337	338	340	344	382	383	385	390	431	432	434	439	484	485	487	491
		TotalPower	2,134	2,132	2,128	2,147	2,392	2,390	2,385	2,405	2,680	2,678	2,673	2,693	2,991	2,989	2,985	3,004	3,339	3,337	3,332	3,352	3,747	3,745	3,741	3,760
	1160	Capacity	36,097	36,600	37,664	39,289	35,778	36,281	37,345	38,970	34,848	35,351	36,415	38,040	33,249	**33,752**	34,815	36,440	31,294	31,796	32,860	34,485	29,509	30,012	31,075	32,700
		S/T	0.77	0.70	0.57	0.43	1.00	0.71	0.57	0.44	1.00	0.73	0.60	0.46	1.00	**0.75**	0.62	0.48	1.00	0.77	0.64	0.50	1.00	1.00	0.69	0.55
		Evap dT	23.93	22.01	18.40	14.67	23.88	21.95	18.35	14.62	24.15	22.22	18.62	14.89	23.86	**21.93**	18.33	14.60	23.60	21.67	18.07	14.34	24.81	22.88	19.28	15.55
		Pr Suc	126	127	131	136	133	135	138	143	140	142	145	150	146	**147**	150	156	151	153	156	161	158	159	163	168
		Pr Dis	258	259	261	266	299	300	301	306	341	342	344	348	386	**387**	389	394	435	437	438	443	488	489	491	495
		TotalPower	2,160	2,158	2,154	2,174	2,418	2,416	2,412	2,431	2,706	2,704	2,699	2,719	3,017	**3,015**	3,011	3,031	3,365	3,363	3,359	3,379	3,773	3,771	3,767	3,787
	1350	Capacity	36,855	37,358	38,422	40,047	36,537	37,040	38,103	39,728	35,607	36,110	37,173	38,798	34,007	34,510	35,574	37,198	32,052	32,555	33,619	35,243	30,267	30,770	31,834	33,458
		S/T	0.81	0.74	0.61	0.47	1.00	0.75	0.61	0.47	1.00	0.77	0.64	0.50	1.00	0.79	0.66	0.52	1.00	1.00	0.68	0.54	1.00	1.00	0.73	0.59
		Evap dT	22.67	20.74	17.14	13.41	22.62	20.69	17.09	13.36	22.89	20.96	17.36	13.63	22.60	20.67	17.07	13.34	22.34	20.41	16.81	13.08	23.55	21.62	18.02	14.29
		Pr Suc	129	130	133	139	136	138	141	146	143	144	147	153	148	150	153	158	154	155	158	164	161	162	165	171
		Pr Dis	261	262	264	268	301	302	304	309	344	345	347	351	389	390	392	396	438	439	441	446	491	492	494	498
		TotalPower	2,175	2,173	2,168	2,188	2,433	2,431	2,426	2,446	2,720	2,718	2,714	2,734	3,032	3,030	3,025	3,045	3,380	3,378	3,373	3,393	3,788	3,786	3,781	3,801

IDB: Entering Indoor Dry Bulb Temperature

Shaded area reflects ACCA (TVA) conditions

kW = Total system power

High and low pressures are measured at the liquid and suction access fittings.

Amps: Unit amps (comp.+ evaporator + condenser fan motors)

Design Subcooling, 16 - 19 °F @ the liquid access fitting connection ARI 95 test conditions. Design Superheat 8 - 12°F @ the compressor suction access fitting connection.

Expanded Cooling Data

			Outdoor Ambient Temperature																							
			65				75				85				95				105				115			
			Entering Indoor Wet Bulb Temperature																							
IDB	Airflow	ID WB	59	63	67	71	59	63	67	71	59	63	67	71	59	63	67	71	59	63	67	71	59	63	67	71
80	900	Capacity	35,495	35,998	37,062	38,687	35,176	35,679	36,743	38,368	34,246	34,749	35,813	37,438	32,647	33,150	34,213	35,838	30,692	31,195	32,258	33,883	28,907	29,410	30,473	32,098
		S/T	1.00	0.70	0.56	0.42	1.00	0.70	0.57	0.43	1.00	0.73	0.59	0.45	1.00	0.75	0.61	0.47	1.00	1.00	0.63	0.50	1.00	1.00	0.68	0.55
		Evap dT	30.50	28.57	24.97	21.24	30.45	28.52	24.92	21.19	30.72	28.79	25.19	21.46	30.43	28.50	24.90	21.17	30.17	28.24	24.64	20.91	31.38	29.45	25.85	22.12
		Pr Suc	123	125	128	133	131	132	135	141	137	139	142	147	143	144	148	153	148	150	153	158	155	157	160	165
		Pr Dis	255	256	258	262	295	296	298	302	337	338	340	345	383	384	386	390	432	433	435	439	484	485	487	492
		TotalPower	2,135	2,133	2,129	2,149	2,393	2,391	2,387	2,406	2,681	2,679	2,674	2,694	2,992	2,990	2,986	3,006	3,340	3,338	3,334	3,354	3,748	3,746	3,742	3,762
	1160	Capacity	36,281	36,784	37,848	39,473	35,963	36,466	37,529	39,154	35,033	35,536	36,600	38,224	33,433	33,936	**35,000**	36,625	31,478	31,981	33,045	34,670	29,693	30,196	31,260	32,885
		S/T	1.00	0.82	0.69	0.55	1.00	0.83	0.70	0.56	1.00	0.85	0.72	0.58	1.00	1.00	**0.74**	0.60	1.00	1.00	0.76	0.62	1.00	1.00	0.81	0.67
		Evap dT	28.20	26.28	22.67	18.94	28.15	26.22	22.62	18.89	28.42	26.49	22.89	19.16	28.13	26.20	**22.60**	18.87	27.87	25.95	22.34	18.61	29.08	27.15	23.55	19.82
		Pr Suc	126	128	131	136	134	135	139	144	141	142	145	151	146	148	**151**	156	152	153	156	162	158	160	163	168
		Pr Dis	259	260	262	266	299	300	302	306	341	342	344	349	387	388	**390**	394	436	437	439	443	488	489	491	496
		TotalPower	2,162	2,160	2,155	2,175	2,420	2,417	2,413	2,433	2,707	2,705	2,701	2,721	3,019	3,017	**3,012**	3,032	3,367	3,365	3,360	3,380	3,775	3,773	3,768	3,788
	1350	Capacity	37,040	37,543	38,606	40,231	36,721	37,224	38,288	39,913	35,791	36,294	37,358	38,983	34,191	34,694	35,758	37,383	32,236	32,739	33,803	35,428	30,451	30,954	32,018	33,643
		S/T	1.00	0.86	0.73	0.59	1.00	0.87	0.74	0.60	1.00	0.89	0.76	0.62	1.00	1.00	0.78	0.64	1.00	1.00	0.80	0.66	1.00	1.00	0.85	0.71
		Evap dT	26.94	25.01	21.41	17.68	26.89	24.96	21.36	17.63	27.16	25.23	21.63	17.90	26.87	24.94	21.34	17.61	26.61	24.68	21.08	17.35	27.82	25.89	22.29	18.56
		Pr Suc	129	131	134	139	137	138	141	147	143	145	148	153	149	150	154	159	154	156	159	164	161	163	166	171
		Pr Dis	261	263	264	269	302	303	305	309	344	345	347	351	390	391	393	397	439	440	442	446	491	492	494	498
		TotalPower	2,176	2,174	2,170	2,189	2,434	2,432	2,427	2,447	2,722	2,720	2,715	2,735	3,033	3,031	3,027	3,046	3,381	3,379	3,375	3,394	3,789	3,787	3,783	3,803
85	900	Capacity	36,095	36,598	37,662	39,287	35,776	36,279	37,343	38,968	34,846	35,349	36,413	38,038	33,247	33,750	34,813	36,438	31,292	31,794	32,858	34,483	29,507	30,010	31,073	32,698
		S/T	1.00	0.79	0.66	0.52	1.00	0.80	0.67	0.53	1.00	1.00	0.69	0.55	1.00	1.00	0.71	0.57	1.00	1.00	0.73	0.59	1.00	1.00	1.00	0.64
		Evap dT	34.29	32.36	28.76	25.03	34.24	32.31	28.70	24.97	34.51	32.58	28.98	25.24	34.22	32.29	28.68	24.95	33.96	32.03	28.43	24.70	35.17	33.24	29.63	25.90
		Pr Suc	125	127	130	135	133	134	137	143	139	141	144	149	145	146	149	155	150	152	155	160	157	159	162	167
		Pr Dis	256	257	259	263	296	297	299	304	338	340	341	346	384	385	387	391	433	434	436	440	485	487	488	493
		TotalPower	2,140	2,138	2,134	2,154	2,398	2,396	2,392	2,411	2,686	2,684	2,679	2,699	2,997	2,995	2,991	3,011	3,345	3,343	3,339	3,358	3,753	3,751	3,747	3,767
	1160	Capacity	36,881	37,384	38,448	40,073	36,563	37,066	38,129	39,754	35,633	36,136	37,200	38,824	34,033	34,536	35,600	37,225	32,078	32,581	33,645	35,270	30,293	30,796	31,860	33,485
		S/T	1.00	0.92	0.79	0.65	1.00	1.00	0.80	0.66	1.00	1.00	0.82	0.68	1.00	1.00	0.84	0.70	1.00	1.00	0.86	0.72	1.000	1.000	1.000	0.771
		Evap dT	31.99	30.06	26.46	22.73	31.94	30.01	26.41	22.68	32.21	30.28	26.68	22.95	31.92	29.99	26.39	22.66	31.66	29.73	26.13	22.40	32.87	30.94	27.34	23.61
		Pr Suc	128	130	133	138	136	137	141	146	142	144	147	152	148	150	153	158	153	155	158	163	160	162	165	170
		Pr Dis	260	261	263	267	300	301	303	308	342	344	345	350	388	389	391	395	437	438	440	444	490	491	492	497
		TotalPower	2,167	2,165	2,160	2,180	2,424	2,422	2,418	2,438	2,712	2,710	2,706	2,726	3,024	3,022	3,017	3,037	3,372	3,370	3,365	3,385	3,780	3,778	3,773	3,793
	1350	Capacity	37,640	38,143	39,206	40,831	37,321	37,824	38,888	40,513	36,391	36,894	37,958	39,583	34,791	35,294	36,358	37,983	32,836	33,339	34,403	36,028	31,051	31,554	32,618	34,243
		S/T	1.00	0.96	0.83	0.69	1.00	1.00	0.83	0.69	1.00	1.00	0.86	0.72	1.00	1.00	0.88	0.74	1.00	1.00	1.00	0.76	1.00	1.00	1.00	0.81
		Evap dT	30.73	28.80	25.20	21.47	30.68	28.75	25.15	21.42	30.95	29.02	25.42	21.69	30.66	28.73	25.13	21.40	30.40	28.47	24.87	21.14	31.61	29.68	26.08	22.35
		Pr Suc	131	133	136	141	139	140	143	148	145	147	150	155	151	152	155	161	156	158	161	166	163	165	168	173
		Pr Dis	263	264	266	270	303	304	306	310	345	346	348	353	391	392	394	398	440	441	443	447	492	493	495	500
		TotalPower	2,181	2,179	2,175	2,194	2,439	2,437	2,432	2,452	2,727	2,725	2,720	2,740	3,038	3,036	3,032	3,051	3,386	3,384	3,380	3,399	3,794	3,792	3,788	3,807

IDB: Entering Indoor Dry Bulb Temperature

Shaded area reflects AHRI (TVA) conditions

kW = Total system power

High and low pressures are measured at the liquid and suction access fittings.

Amps: Unit amps (comp.+ evaporator + condenser fan motors)

Design Subcooling, 16 - 19 °F @ the liquid access fitting connection ARI 95 test conditions. Design Superheat 8 - 12°F @ the compressor suction access fitting connection.

			Outdoor Ambient Temperature																							
			65				75				85				95				105				115			
			Entering Indoor Wet Bulb Temperature																							
IDB	Airflow	ID WB	59	63	67	71	59	63	67	71	59	63	67	71	59	63	67	71	59	63	67	71	59	63	67	71
70	900	Capacity	35,290	35,793	36,856	-	34,971	35,474	36,538	-	34,041	34,544	35,608	-	32,441	32,944	34,008	-	30,486	30,989	32,053	-	28,701	29,204	30,268	-
		S/T	0.52	0.45	0.32	-	0.53	0.45	0.32	-	0.55	0.48	0.35	-	0.57	0.50	0.37	-	1.00	0.52	0.39	-	1.00	0.57	0.44	-
		Evap dT	21.99	20.06	16.46	-	21.94	20.01	16.41	-	22.21	20.28	16.68	-	21.92	19.99	16.39	-	21.66	19.73	16.13	-	22.87	20.94	17.34	-
		Pr Suc	123	124	127	-	130	132	135	-	137	138	141	-	142	144	147	-	148	149	153	-	155	156	159	-
		Pr Dis	254	255	257	-	294	295	297	-	337	338	339	-	382	383	385	-	431	432	434	-	484	485	486	-
	1160	Capacity	36,076	36,579	37,643	-	35,758	36,260	37,324	-	34,828	35,331	36,394	-	33,228	33,731	34,795	-	31,273	31,776	32,839	-	29,488	29,991	31,055	-
		S/T	0.65	0.57	0.44	-	0.66	0.58	0.45	-	0.68	0.61	0.47	-	1.00	0.62	0.49	-	1.00	0.65	0.51	-	1.00	0.70	0.56	-
		Evap dT	19.69	17.76	14.16	-	19.64	17.71	14.11	-	19.91	17.98	14.38	-	19.62	17.69	14.09	-	19.36	17.43	13.83	-	20.57	18.64	15.04	-
		Pr Suc	126	127	131	-	133	135	138	-	140	142	145	-	146	147	150	-	151	153	156	-	158	159	163	-
		Pr Dis	258	259	261	-	298	299	301	-	341	342	344	-	386	387	389	-	435	436	438	-	488	489	491	-
	1350	Capacity	36,835	37,337	38,401	-	36,516	37,019	38,082	-	35,586	36,089	37,153	-	33,986	34,489	35,553	-	32,031	32,534	33,598	-	30,246	30,749	31,813	-
		S/T	0.69	0.61	0.48	-	0.69	0.62	0.49	-	0.72	0.64	0.51	-	1.00	0.66	0.53	-	1.00	0.68	0.55	-	1.00	0.73	0.60	-
		Evap dT	18.43	16.50	12.90	-	18.38	16.45	12.85	-	18.65	16.72	13.12	-	18.36	16.43	12.83	-	18.10	16.17	12.57	-	19.31	17.38	13.78	-
		Pr Suc	129	130	133	-	136	138	141	-	143	144	147	-	148	150	153	-	154	155	158	-	161	162	165	-
		Pr Dis	261	262	264	-	301	302	304	-	343	344	346	-	389	390	392	-	438	439	441	-	490	491	493	-
75	900	Capacity	35,311	35,813	36,877	38,502	34,992	35,495	36,558	38,183	34,062	34,565	35,629	37,253	32,462	32,965	34,029	35,654	30,507	31,010	32,074	33,699	28,722	29,225	30,289	31,914
		S/T	0.65	0.57	0.44	0.30	0.65	0.58	0.45	0.31	1.00	0.60	0.47	0.33	1.00	0.62	0.49	0.35	1.00	0.64	0.51	0.37	1.00	1.00	0.56	0.42
		Evap dT	26.23	24.30	20.70	16.97	26.18	24.25	20.65	16.92	26.45	24.52	20.92	17.19	26.16	24.23	20.63	16.90	25.90	23.97	20.37	16.64	27.11	25.18	21.58	17.85
		Pr Suc	123	124	127	133	130	132	135	140	137	138	141	147	142	144	147	152	148	149	153	158	155	156	159	165
		Pr Dis	254	255	257	261	294	296	297	302	337	338	340	344	382	383	385	390	431	432	434	439	484	485	487	491
	1160	Capacity	36,097	36,600	37,664	39,289	35,778	36,281	37,345	38,970	34,848	35,351	36,415	38,040	33,249	**33,752**	34,815	36,440	31,294	31,796	32,860	34,485	29,509	30,012	31,075	32,700
		S/T	0.77	0.70	0.57	0.43	1.00	0.71	0.57	0.44	1.00	0.73	0.60	0.46	1.00	**0.75**	0.62	0.48	1.00	0.77	0.64	0.50	1.00	1.00	0.69	0.55
		Evap dT	23.93	22.01	18.40	14.67	23.88	21.95	18.35	14.62	24.15	22.22	18.62	14.89	23.86	**21.93**	18.33	14.60	23.60	21.67	18.07	14.34	24.81	22.88	19.28	15.55
		Pr Suc	126	127	131	136	133	135	138	143	140	142	145	150	146	**147**	150	156	151	153	156	161	158	159	163	168
		Pr Dis	258	259	261	266	299	300	301	306	341	342	344	348	386	**387**	389	394	435	437	438	443	488	489	491	495
	1350	Capacity	36,855	37,358	38,422	40,047	36,537	37,040	38,103	39,728	35,607	36,110	37,173	38,798	34,007	34,510	35,574	37,198	32,052	32,555	33,619	35,243	30,267	30,770	31,834	33,458
		S/T	0.81	0.74	0.61	0.47	1.00	0.75	0.61	0.47	1.00	0.77	0.64	0.50	1.00	0.79	0.66	0.52	1.00	1.00	0.68	0.54	1.00	1.00	0.73	0.59
		Evap dT	22.67	20.74	17.14	13.41	22.62	20.69	17.09	13.36	22.89	20.96	17.36	13.63	22.60	20.67	17.07	13.34	22.34	20.41	16.81	13.08	23.55	21.62	18.02	14.29
		Pr Suc	129	130	133	139	136	138	141	146	143	144	147	153	148	150	153	158	154	155	158	164	161	162	165	171
		Pr Dis	261	262	264	268	301	302	304	309	344	345	347	351	389	390	392	396	438	439	441	446	491	492	494	498

IDB: Entering Indoor Dry Bulb Temperature Shaded area reflects ACCA (TVA) conditions **kW = Total system power**

High and low pressures are measured at the liquid and suction access fittings. **Amps: Unit amps (comp.+ evaporator + condenser fan motors)**

Design Subcooling, 16 - 19 °F @ the liquid access fitting connection ARI 95 test conditions. Design Superheat 8 - 12°F @ the compressor suction access fitting connection.

			Outdoor Ambient Temperature																							
			65				75				85				95				105				115			
			Entering Indoor Wet Bulb Temperature																							
IDB	Airflow	ID WB	59	63	67	71	59	63	67	71	59	63	67	71	59	63	67	71	59	63	67	71	59	63	67	71
70	900	Capacity	35,495	35,998	37,062	38,687	35,176	35,679	36,743	38,368	34,246	34,749	35,813	37,438	32,647	33,150	34,213	35,838	30,692	31,195	32,258	33,883	28,907	29,410	30,473	32,098
		S/T	1.00	0.70	0.56	0.42	1.00	0.70	0.57	0.43	1.00	0.73	0.59	0.45	1.00	0.75	0.61	0.47	1.00	1.00	0.63	0.50	1.00	1.00	0.68	0.55
		Evap dT	30.50	28.57	24.97	21.24	30.45	28.52	24.92	21.19	30.72	28.79	25.19	21.46	30.43	28.50	24.90	21.17	30.17	28.24	24.64	20.91	31.38	29.45	25.85	22.12
		Pr Suc	123	125	128	133	131	132	135	141	137	139	142	147	143	144	148	153	148	150	153	158	155	157	160	165
		Pr Dis	255	256	258	262	295	296	298	302	337	338	340	345	383	384	386	390	432	433	435	439	484	485	487	492
	1160	Capacity	36,281	36,784	37,848	39,473	35,963	36,466	37,529	39,154	35,033	35,536	36,600	38,224	33,433	33,936	**35,000**	36,625	31,478	31,981	33,045	34,670	29,693	30,196	31,260	32,885
		S/T	1.00	0.82	0.69	0.55	1.00	0.83	0.70	0.56	1.00	0.85	0.72	0.58	1.00	1.00	**0.74**	0.60	1.00	1.00	0.76	0.62	1.00	1.00	0.81	0.67
		Evap dT	28.20	26.28	22.67	18.94	28.15	26.22	22.62	18.89	28.42	26.49	22.89	19.16	28.13	26.20	**22.60**	18.87	27.87	25.95	22.34	18.61	29.08	27.15	23.55	19.82
		Pr Suc	126	128	131	136	134	135	139	144	141	142	145	151	146	148	**151**	156	152	153	156	162	158	160	163	168
		Pr Dis	259	260	262	266	299	300	302	306	341	342	344	349	387	388	**390**	394	436	437	439	443	488	489	491	496
	1350	Capacity	37,040	37,543	38,606	40,231	36,721	37,224	38,288	39,913	35,791	36,294	37,358	38,983	34,191	34,694	35,758	37,383	32,236	32,739	33,803	35,428	30,451	30,954	32,018	33,643
		S/T	1.00	0.86	0.73	0.59	1.00	0.87	0.74	0.60	1.00	0.89	0.76	0.62	1.00	1.00	0.78	0.64	1.00	1.00	0.80	0.66	1.00	1.00	0.85	0.71
		Evap dT	26.94	25.01	21.41	17.68	26.89	24.96	21.36	17.63	27.16	25.23	21.63	17.90	26.87	24.94	21.34	17.61	26.61	24.68	21.08	17.35	27.82	25.89	22.29	18.56
		Pr Suc	129	131	134	139	137	138	141	147	143	145	148	153	149	150	154	159	154	156	159	164	161	163	166	171
		Pr Dis	261	263	264	269	302	303	305	309	344	345	347	351	390	391	393	397	439	440	442	446	491	492	494	498
75	900	Capacity	36,095	36,598	37,662	39,287	35,776	36,279	37,343	38,968	34,846	35,349	36,413	38,038	33,247	33,750	34,813	36,438	31,292	31,794	32,858	34,483	29,507	30,010	31,073	32,698
		S/T	1.00	0.79	0.66	0.52	1.00	0.80	0.67	0.53	1.00	1.00	0.69	0.55	1.00	1.00	0.71	0.57	1.00	1.00	0.73	0.59	1.00	1.00	1.00	0.64
		Evap dT	34.29	32.36	28.76	25.03	34.24	32.31	28.70	24.97	34.51	32.58	28.98	25.24	34.22	32.29	28.68	24.95	33.96	32.03	28.43	24.70	35.17	33.24	29.63	25.90
		Pr Suc	125	127	130	135	133	134	137	143	139	141	144	149	145	146	149	155	150	152	155	160	157	159	162	167
		Pr Dis	256	257	259	263	296	297	299	304	338	340	341	346	384	385	387	391	433	434	436	440	485	487	488	493
	1160	Capacity	36,881	37,384	38,448	40,073	36,563	37,066	38,129	39,754	35,633	36,136	37,200	38,824	34,033	34,536	35,600	37,225	32,078	32,581	33,645	35,270	30,293	30,796	31,860	33,485
		S/T	1.00	0.92	0.79	0.65	1.00	1.00	0.80	0.66	1.00	1.00	0.82	0.68	1.00	1.00	0.84	0.70	1.00	1.00	0.86	0.72	1.000	1.000	1.000	0.771
		Evap dT	31.99	30.06	26.46	22.73	31.94	30.01	26.41	22.68	32.21	30.28	26.68	22.95	31.92	29.99	26.39	22.66	31.66	29.73	26.13	22.40	32.87	30.94	27.34	23.61
		Pr Suc	128	130	133	138	136	137	141	146	142	144	147	152	148	150	153	158	153	155	158	163	160	162	165	170
		Pr Dis	260	261	263	267	300	301	303	308	342	344	345	350	388	389	391	395	437	438	440	444	490	491	492	497
	1350	Capacity	37,640	38,143	39,206	40,831	37,321	37,824	38,888	40,513	36,391	36,894	37,958	39,583	34,791	35,294	36,358	37,983	32,836	33,339	34,403	36,028	31,051	31,554	32,618	34,243
		S/T	1.00	0.96	0.83	0.69	1.00	1.00	0.83	0.69	1.00	1.00	0.86	0.72	1.00	1.00	0.88	0.74	1.00	1.00	1.00	0.76	1.00	1.00	1.00	0.81
		Evap dT	30.73	28.80	25.20	21.47	30.68	28.75	25.15	21.42	30.95	29.02	25.42	21.69	30.66	28.73	25.13	21.40	30.40	28.47	24.87	21.14	31.61	29.68	26.08	22.35
		Pr Suc	131	133	136	141	139	140	143	148	145	147	150	155	151	152	155	161	156	158	161	166	163	165	168	173
		Pr Dis	263	264	266	270	303	304	306	310	345	346	348	353	391	392	394	398	440	441	443	447	492	493	495	500

IDB: Entering Indoor Dry Bulb Temperature

Shaded area reflects ACCA (TVA) conditions

kW = Total system power

High and low pressures are measured at the liquid and suction access fittings.

Amps: Unit amps (comp.+ evaporator + condenser fan motors)

Design Subcooling, 16 - 19 °F @ the liquid access fitting connection ARI 95 test conditions. Design Superheat 8 - 12°F @ the compressor suction access fitting connection.

			Outdoor Ambient Temperature																							
			65				75				85				95				105				115			
			Entering Indoor Wet Bulb Temperature																							
IDB	Airflow	ID WB	59	63	67	71	59	63	67	71	59	63	67	71	59	63	67	71	59	63	67	71	59	63	67	71
70	900	Capacity	47,052	47,720	49,133	-	46,628	47,296	48,710	-	45,393	46,061	47,474	-	43,267	43,936	45,349	-	40,670	41,338	42,751	-	38,299	38,967	40,380	-
		S/T	0.56	0.48	0.35	-	0.56	0.49	0.35	-	0.59	0.51	0.38	-	0.61	0.53	0.40	-	1.00	0.55	0.42	-	1.00	0.60	0.47	-
		Evap dT	21.50	19.57	15.97	-	21.45	19.52	15.92	-	21.72	19.79	16.19	-	21.43	19.50	15.90	-	21.17	19.24	15.64	-	22.38	20.45	16.85	-
		Pr Suc	121	123	126	-	129	130	133	-	135	137	140	-	141	142	145	-	146	148	151	-	153	154	158	-
		Pr Dis	257	258	260	-	298	299	301	-	341	342	344	-	387	388	390	-	436	437	439	-	489	490	492	-
		TotalPower	2,764	2,761	2,756	-	3,090	3,088	3,082	-	3,455	3,452	3,446	-	3,849	3,846	3,841	-	4,289	4,287	4,281	-	4,806	4,803	4,798	-
	1160	Capacity	47,930	48,598	50,011	-	47,506	48,175	49,588	-	46,271	46,939	48,352	-	44,146	44,814	46,227	-	41,548	42,216	43,630	-	39,177	39,845	41,258	-
		S/T	0.65	0.58	0.45	-	0.66	0.58	0.45	-	0.68	0.61	0.48	-	1.00	0.63	0.49	-	1.00	0.65	0.52	-	1.00	0.70	0.57	-
		Evap dT	19.69	17.76	14.16	-	19.64	17.71	14.11	-	19.91	17.98	14.38	-	19.62	17.69	14.09	-	19.36	17.43	13.83	-	20.57	18.64	15.04	-
		Pr Suc	124	125	129	-	131	133	136	-	138	139	143	-	143	145	148	-	149	150	153	-	156	157	160	-
		Pr Dis	261	262	263	-	301	302	304	-	344	345	347	-	390	391	393	-	440	441	443	-	493	494	495	-
		TotalPower	2,790	2,788	2,782	-	3,117	3,114	3,108	-	3,481	3,478	3,473	-	3,875	3,872	3,867	-	4,315	4,313	4,307	-	4,832	4,830	4,824	-
	1350	Capacity	49,377	50,045	51,458	-	48,953	49,621	51,034	-	47,718	48,386	49,799	-	45,592	46,261	47,674	-	42,995	43,663	45,076	-	40,623	41,292	42,705	-
		S/T	0.70	0.62	0.49	-	0.70	0.63	0.49	-	0.73	0.65	0.52	-	1.00	0.67	0.54	-	1.00	0.69	0.56	-	1.00	0.74	0.61	-
		Evap dT	18.01	16.08	12.48	-	17.96	16.03	12.43	-	18.23	16.30	12.70	-	17.94	16.01	12.41	-	17.68	15.75	12.15	-	18.89	16.96	13.36	-
		Pr Suc	128	129	132	-	135	137	140	-	142	143	146	-	147	149	152	-	153	154	157	-	159	161	164	-
		Pr Dis	264	266	267	-	305	306	308	-	348	349	351	-	394	395	397	-	443	445	446	-	496	498	499	-
		TotalPower	2,815	2,812	2,806	-	3,141	3,138	3,133	-	3,505	3,503	3,497	-	3,899	3,897	3,891	-	4,340	4,337	4,332	-	4,856	4,854	4,848	-
75	900	Capacity	47,079	47,747	49,161	51,319	46,656	47,324	48,737	50,896	45,420	46,089	47,502	49,661	43,295	43,963	45,376	47,535	40,698	41,366	42,779	44,938	38,326	38,994	40,408	42,566
		S/T	0.68	0.61	0.47	0.33	0.69	0.61	0.48	0.34	1.00	0.64	0.51	0.37	1.00	0.66	0.52	0.38	1.00	0.68	0.55	0.41	1.00	0.73	0.60	0.46
		Evap dT	25.74	23.81	20.21	16.48	25.69	23.76	20.16	16.43	25.96	24.03	20.43	16.70	25.67	23.74	20.14	16.41	25.41	23.48	19.88	16.15	26.62	24.69	21.09	17.36
		Pr Suc	121	123	126	131	129	130	133	139	135	137	140	145	141	142	145	151	146	148	151	156	153	155	158	163
		Pr Dis	257	259	260	265	298	299	301	306	341	342	344	348	387	388	390	394	437	438	439	444	489	491	492	497
		TotalPower	2,762	2,759	2,754	2,779	3,088	3,086	3,080	3,105	3,452	3,450	3,444	3,469	3,847	3,844	3,838	3,863	4,287	4,284	4,279	4,304	4,804	4,801	4,796	4,821
	1160	Capacity	47,957	48,626	50,039	52,198	47,534	48,202	49,615	51,774	46,299	46,967	48,380	50,539	44,173	**44,841**	46,255	48,413	41,576	42,244	43,657	45,816	39,204	39,873	41,286	43,445
		S/T	0.78	0.70	0.57	0.43	0.79	0.71	0.58	0.44	1.00	0.74	0.60	0.46	1.00	**0.75**	0.62	0.48	1.00	0.78	0.64	0.50	1.00	1.00	0.69	0.55
		Evap dT	23.93	22.01	18.40	14.67	23.88	21.95	18.35	14.62	24.15	22.22	18.62	14.89	23.86	**21.93**	18.33	14.60	23.60	21.67	18.07	14.34	24.81	22.88	19.28	15.55
		Pr Suc	124	126	129	134	131	133	136	141	138	139	143	148	143	**145**	148	153	149	150	153	159	156	157	160	165
		Pr Dis	261	262	264	268	302	303	304	309	344	345	347	352	390	**391**	393	398	440	441	443	447	493	494	496	500
		TotalPower	2,788	2,786	2,780	2,805	3,114	3,112	3,106	3,131	3,479	3,476	3,471	3,496	3,873	**3,870**	3,865	3,890	4,313	4,311	4,305	4,330	4,830	4,827	4,822	4,847
	1350	Capacity	49,404	50,072	51,486	53,644	48,981	49,649	51,062	53,221	47,745	48,413	49,827	51,985	45,620	46,288	47,701	49,860	43,022	43,691	45,104	47,263	40,651	41,319	42,732	44,891
		S/T	0.82	0.75	0.62	0.48	1.00	0.75	0.62	0.48	1.00	0.78	0.65	0.51	1.00	0.80	0.67	0.52	1.00	0.82	0.69	0.55	1.00	1.00	0.74	0.60
		Evap dT	22.25	20.33	16.72	12.99	22.20	20.27	16.67	12.94	22.47	20.54	16.94	13.21	22.18	20.25	16.65	12.92	21.92	19.99	16.39	12.66	23.13	21.20	17.60	13.87
		Pr Suc	128	129	132	138	135	137	140	145	142	143	146	152	147	149	152	157	153	154	157	162	159	161	164	169
		Pr Dis	265	266	268	272	305	307	308	313	348	349	351	356	394	395	397	402	444	445	447	451	497	498	500	504
		TotalPower	2,812	2,810	2,804	2,829	3,139	3,136	3,131	3,156	3,503	3,500	3,495	3,520	3,897	3,895	3,889	3,914	4,338	4,335	4,329	4,354	4,854	4,852	4,846	4,871

IDB: Entering Indoor Dry Bulb Temperature Shaded area reflects ACCA (TVA) conditions **kW = Total system power**

High and low pressures are measured at the liquid and suction access fittings. **Amps: Unit amps (comp.+ evaporator + condenser fan motors)**

Design Subcooling, 16 - 19 °F @ the liquid access fitting connection ARI 95 test conditions. Design Superheat 8 - 12°F @ the compressor suction access fitting connection.

			Outdoor Ambient Temperature																							
			65				75				85				95				105				115			
			Entering Indoor Wet Bulb Temperature																							
IDB	Airflow	ID WB	59	63	67	71	59	63	67	71	59	63	67	71	59	63	67	71	59	63	67	71	59	63	67	71
80	900	Capacity	47,324	47,993	49,406	51,564	46,901	47,569	48,982	51,141	45,666	46,334	47,747	49,906	43,540	44,208	45,622	47,780	40,943	41,611	43,024	45,183	38,571	39,239	40,653	42,811
		S/T	0.81	0.73	0.60	0.46	1.00	0.74	0.60	0.46	1.00	0.76	0.63	0.49	1.00	0.78	0.65	0.51	1.00	1.00	0.67	0.53	1.00	1.00	0.72	0.58
		Evap dT	30.01	28.08	24.48	20.75	29.96	28.03	24.43	20.70	30.23	28.30	24.70	20.97	29.94	28.01	24.41	20.68	29.68	27.75	24.15	20.42	30.89	28.96	25.36	21.63
		Pr Suc	122	123	127	132	129	131	134	139	136	137	140	146	141	143	146	151	147	148	151	157	154	155	158	163
		Pr Dis	258	259	261	265	299	300	302	306	341	343	344	349	387	389	390	395	437	438	440	444	490	491	493	497
		TotalPower	2,764	2,761	2,755	2,780	3,090	3,087	3,082	3,107	3,454	3,452	3,446	3,471	3,848	3,846	3,840	3,865	4,289	4,286	4,281	4,306	4,805	4,803	4,797	4,822
	1160	Capacity	48,203	48,871	50,284	52,443	47,779	48,447	49,860	52,019	46,544	47,212	48,625	50,784	44,418	45,086	**46,500**	48,658	41,821	42,489	43,902	46,061	39,449	40,118	41,531	43,690
		S/T	1.00	0.83	0.69	0.55	1.00	0.83	0.70	0.56	1.00	0.86	0.73	0.59	1.00	1.00	**0.74**	0.60	1.00	1.00	0.77	0.63	1.00	1.00	0.82	0.68
		Evap dT	28.20	26.28	22.67	18.94	28.15	26.22	22.62	18.89	28.42	26.49	22.89	19.16	28.13	26.20	**22.60**	18.87	27.87	25.95	22.34	18.61	29.08	27.15	23.55	19.82
		Pr Suc	125	126	129	134	132	133	137	142	138	140	143	148	144	145	**149**	154	149	151	154	159	156	158	161	166
		Pr Dis	261	262	264	269	302	303	305	309	345	346	348	352	391	392	**394**	398	440	441	443	448	493	494	496	501
		TotalPower	2,790	2,787	2,782	2,807	3,116	3,114	3,108	3,133	3,480	3,478	3,472	3,497	3,875	3,872	**3,866**	3,891	4,315	4,312	4,307	4,332	4,832	4,829	4,824	4,848
	1350	Capacity	49,649	50,317	51,731	53,889	49,226	49,894	51,307	53,466	47,990	48,659	50,072	52,231	45,865	46,533	47,946	50,105	43,267	43,936	45,349	47,508	40,896	41,564	42,978	45,136
		S/T	1.00	0.87	0.74	0.60	1.00	0.88	0.74	0.60	1.00	0.90	0.77	0.63	1.00	1.00	0.79	0.65	1.00	1.00	0.81	0.67	1.00	1.00	0.86	0.72
		Evap dT	26.52	24.60	20.99	17.26	26.47	24.54	20.94	17.21	26.74	24.81	21.21	17.48	26.45	24.52	20.92	17.19	26.19	24.27	20.66	16.93	27.40	25.47	21.87	18.14
		Pr Suc	128	130	133	138	136	137	140	146	142	144	147	152	148	149	152	158	153	155	158	163	160	161	165	170
		Pr Dis	265	266	268	273	306	307	309	313	349	350	352	356	395	396	398	402	444	445	447	452	497	498	500	505
		TotalPower	2,814	2,812	2,806	2,831	3,140	3,138	3,132	3,157	3,505	3,502	3,497	3,521	3,899	3,896	3,891	3,916	4,339	4,337	4,331	4,356	4,856	4,853	4,848	4,873
85	900	Capacity	48,121	48,790	50,203	52,362	47,698	48,366	49,779	51,938	46,463	47,131	48,544	50,703	44,337	45,005	46,419	48,577	41,740	42,408	43,821	45,980	39,368	40,037	41,450	43,609
		S/T	1.00	0.83	0.70	0.56	1.00	0.84	0.70	0.56	1.00	1.00	0.73	0.59	1.00	1.00	0.75	0.61	1.00	1.00	0.77	0.63	1.00	1.00	1.00	0.68
		Evap dT	33.80	31.87	28.27	24.54	33.75	31.82	28.21	24.48	34.02	32.09	28.49	24.75	33.73	31.80	28.20	24.46	33.47	31.54	27.94	24.21	34.68	32.75	29.15	25.41
		Pr Suc	124	125	128	134	131	133	136	141	138	139	142	148	143	145	148	153	149	150	153	158	155	157	160	165
		Pr Dis	259	260	262	267	300	301	303	307	343	344	346	350	389	390	392	396	438	439	441	446	491	492	494	499
		TotalPower	2,770	2,767	2,762	2,787	3,096	3,094	3,088	3,113	3,460	3,458	3,452	3,477	3,855	3,852	3,846	3,871	4,295	4,292	4,287	4,312	4,812	4,809	4,804	4,828
	1160	Capacity	49,000	49,668	51,081	53,240	48,576	49,244	50,658	52,816	47,341	48,009	49,422	51,581	45,215	45,884	47,297	49,456	42,618	43,286	44,699	46,858	40,247	40,915	42,328	44,487
		S/T	1.00	0.93	0.79	0.65	1.00	0.93	0.80	0.66	1.00	1.00	0.82	0.68	1.00	1.00	0.84	0.70	1.00	1.00	0.87	0.73	1.000	1.000	1.000	0.776
		Evap dT	31.99	30.06	26.46	22.73	31.94	30.01	26.41	22.68	32.21	30.28	26.68	22.95	31.92	29.99	26.39	22.66	31.66	29.73	26.13	22.40	32.87	30.94	27.34	23.61
		Pr Suc	126	128	131	136	134	135	138	144	140	142	145	150	146	147	150	156	151	153	156	161	158	159	163	168
		Pr Dis	262	264	265	270	303	304	306	311	346	347	349	353	392	393	395	399	442	443	444	449	494	496	497	502
		TotalPower	2,796	2,794	2,788	2,813	3,122	3,120	3,114	3,139	3,487	3,484	3,479	3,503	3,881	3,878	3,873	3,898	4,321	4,319	4,313	4,338	4,838	4,835	4,830	4,855
	1350	Capacity	50,446	51,115	52,528	54,686	50,023	50,691	52,104	54,263	48,787	49,456	50,869	53,028	46,662	47,330	48,744	50,902	44,065	44,733	46,146	48,305	41,693	42,361	43,775	45,933
		S/T	1.00	0.97	0.84	0.70	1.00	1.00	0.84	0.70	1.00	1.00	0.87	0.73	1.00	1.00	0.89	0.75	1.00	1.00	1.00	0.77	1.00	1.00	1.00	0.82
		Evap dT	30.31	28.38	24.78	21.05	30.26	28.33	24.73	21.00	30.53	28.60	25.00	21.27	30.24	28.31	24.71	20.98	29.98	28.05	24.45	20.72	31.19	29.26	25.66	21.93
		Pr Suc	130	132	135	140	138	139	142	147	144	146	149	154	150	151	154	159	155	156	160	165	162	163	166	172
		Pr Dis	266	267	269	274	307	308	310	315	350	351	353	357	396	397	399	403	445	447	448	453	498	499	501	506
		TotalPower	2,820	2,818	2,812	2,837	3,147	3,144	3,139	3,164	3,511	3,508	3,503	3,528	3,905	3,903	3,897	3,922	4,345	4,343	4,337	4,362	4,862	4,860	4,854	4,879

IDB: Entering Indoor Dry Bulb Temperature

Shaded area reflects AHRI (TVA) conditions

kW = Total system power

High and low pressures are measured at the liquid and suction access fittings.

Amps: Unit amps (comp.+ evaporator + condenser fan motors)

Design Subcooling, 16 - 19 °F @ the liquid access fitting connection ARI 95 test conditions. Design Superheat 8 - 12°F @ the compressor suction access fitting connection.

			Outdoor Ambient Temperature																							
			65				75				85				95				105				115			
			Entering Indoor Wet Bulb Temperature																							
IDB	Airflow	ID WB	59	63	67	71	59	63	67	71	59	63	67	71	59	63	67	71	59	63	67	71	59	63	67	71
70	900	Capacity	47,052	47,720	49,133	-	46,628	47,296	48,710	-	45,393	46,061	47,474	-	43,267	43,936	45,349	-	40,670	41,338	42,751	-	38,299	38,967	40,380	-
		S/T	0.56	0.48	0.35	-	0.56	0.49	0.35	-	0.59	0.51	0.38	-	0.61	0.53	0.40	-	1.00	0.55	0.42	-	1.00	0.60	0.47	-
		Evap dT	21.50	19.57	15.97	-	21.45	19.52	15.92	-	21.72	19.79	16.19	-	21.43	19.50	15.90	-	21.17	19.24	15.64	-	22.38	20.45	16.85	-
		Pr Suc	121	123	126	-	129	130	133	-	135	137	140	-	141	142	145	-	146	148	151	-	153	154	158	-
		Pr Dis	257	258	260	-	298	299	301	-	341	342	344	-	387	388	390	-	436	437	439	-	489	490	492	-
	1160	Capacity	47,930	48,598	50,011	-	47,506	48,175	49,588	-	46,271	46,939	48,352	-	44,146	44,814	46,227	-	41,548	42,216	43,630	-	39,177	39,845	41,258	-
		S/T	0.65	0.58	0.45	-	0.66	0.58	0.45	-	0.68	0.61	0.48	-	1.00	0.63	0.49	-	1.00	0.65	0.52	-	1.00	0.70	0.57	-
		Evap dT	19.69	17.76	14.16	-	19.64	17.71	14.11	-	19.91	17.98	14.38	-	19.62	17.69	14.09	-	19.36	17.43	13.83	-	20.57	18.64	15.04	-
		Pr Suc	124	125	129	-	131	133	136	-	138	139	143	-	143	145	148	-	149	150	153	-	156	157	160	-
		Pr Dis	261	262	263	-	301	302	304	-	344	345	347	-	390	391	393	-	440	441	443	-	493	494	495	-
	1350	Capacity	49,377	50,045	51,458	-	48,953	49,621	51,034	-	47,718	48,386	49,799	-	45,592	46,261	47,674	-	42,995	43,663	45,076	-	40,623	41,292	42,705	-
		S/T	0.70	0.62	0.49	-	0.70	0.63	0.49	-	0.73	0.65	0.52	-	1.00	0.67	0.54	-	1.00	0.69	0.56	-	1.00	0.74	0.61	-
		Evap dT	18.01	16.08	12.48	-	17.96	16.03	12.43	-	18.23	16.30	12.70	-	17.94	16.01	12.41	-	17.68	15.75	12.15	-	18.89	16.96	13.36	-
		Pr Suc	128	129	132	-	135	137	140	-	142	143	146	-	147	149	152	-	153	154	157	-	159	161	164	-
		Pr Dis	264	266	267	-	305	306	308	-	348	349	351	-	394	395	397	-	443	445	446	-	496	498	499	-
75	900	Capacity	47,079	47,747	49,161	51,319	46,656	47,324	48,737	50,896	45,420	46,089	47,502	49,661	43,295	43,963	45,376	47,535	40,698	41,366	42,779	44,938	38,326	38,994	40,408	42,566
		S/T	0.68	0.61	0.47	0.33	0.69	0.61	0.48	0.34	1.00	0.64	0.51	0.37	1.00	0.66	0.52	0.38	1.00	0.68	0.55	0.41	1.00	0.73	0.60	0.46
		Evap dT	25.74	23.81	20.21	16.48	25.69	23.76	20.16	16.43	25.96	24.03	20.43	16.70	25.67	23.74	20.14	16.41	25.41	23.48	19.88	16.15	26.62	24.69	21.09	17.36
		Pr Suc	121	123	126	131	129	130	133	139	135	137	140	145	141	142	145	151	146	148	151	156	153	155	158	163
		Pr Dis	257	259	260	265	298	299	301	306	341	342	344	348	387	388	390	394	437	438	439	444	489	491	492	497
	1160	Capacity	47,957	48,626	50,039	52,198	47,534	48,202	49,615	51,774	46,299	46,967	48,380	50,539	44,173	**44,841**	46,255	48,413	41,576	42,244	43,657	45,816	39,204	39,873	41,286	43,445
		S/T	0.78	0.70	0.57	0.43	0.79	0.71	0.58	0.44	1.00	0.74	0.60	0.46	1.00	**0.75**	0.62	0.48	1.00	0.78	0.64	0.50	1.00	1.00	0.69	0.55
		Evap dT	23.93	22.01	18.40	14.67	23.88	21.95	18.35	14.62	24.15	22.22	18.62	14.89	23.86	**21.93**	18.33	14.60	23.60	21.67	18.07	14.34	24.81	22.88	19.28	15.55
		Pr Suc	124	126	129	134	131	133	136	141	138	139	143	148	143	**145**	148	153	149	150	153	159	156	157	160	165
		Pr Dis	261	262	264	268	302	303	304	309	344	345	347	352	390	**391**	393	398	440	441	443	447	493	494	496	500
	1350	Capacity	49,404	50,072	51,486	53,644	48,981	49,649	51,062	53,221	47,745	48,413	49,827	51,985	45,620	46,288	47,701	49,860	43,022	43,691	45,104	47,263	40,651	41,319	42,732	44,891
		S/T	0.82	0.75	0.62	0.48	1.00	0.75	0.62	0.48	1.00	0.78	0.65	0.51	1.00	0.80	0.67	0.52	1.00	0.82	0.69	0.55	1.00	1.00	0.74	0.60
		Evap dT	22.25	20.33	16.72	12.99	22.20	20.27	16.67	12.94	22.47	20.54	16.94	13.21	22.18	20.25	16.65	12.92	21.92	19.99	16.39	12.66	23.13	21.20	17.60	13.87
		Pr Suc	128	129	132	138	135	137	140	145	142	143	146	152	147	149	152	157	153	154	157	162	159	161	164	169
		Pr Dis	265	266	268	272	305	307	308	313	348	349	351	356	394	395	397	402	444	445	447	451	497	498	500	504

IDB: Entering Indoor Dry Bulb Temperature Shaded area reflects ACCA (TVA) conditions **kW = Total system power**

High and low pressures are measured at the liquid and suction access fittings. **Amps: Unit amps (comp.+ evaporator + condenser fan motors)**

Design Subcooling, 16 - 19 °F @ the liquid access fitting connection ARI 95 test conditions. Design Superheat 8 - 12°F @ the compressor suction access fitting connection.

			Outdoor Ambient Temperature																							
			65				75				85				95				105				115			
			Entering Indoor Wet Bulb Temperature																							
IDB	Airflow	ID WB	59	63	67	71	59	63	67	71	59	63	67	71	59	63	67	71	59	63	67	71	59	63	67	71
70	900	Capacity	47,324	47,993	49,406	51,564	46,901	47,569	48,982	51,141	45,666	46,334	47,747	49,906	43,540	44,208	45,622	47,780	40,943	41,611	43,024	45,183	38,571	39,239	40,653	42,811
		S/T	0.81	0.73	0.60	0.46	1.00	0.74	0.60	0.46	1.00	0.76	0.63	0.49	1.00	0.78	0.65	0.51	1.00	1.00	0.67	0.53	1.00	1.00	0.72	0.58
		Evap dT	30.01	28.08	24.48	20.75	29.96	28.03	24.43	20.70	30.23	28.30	24.70	20.97	29.94	28.01	24.41	20.68	29.68	27.75	24.15	20.42	30.89	28.96	25.36	21.63
		Pr Suc	122	123	127	132	129	131	134	139	136	137	140	146	141	143	146	151	147	148	151	157	154	155	158	163
		Pr Dis	258	259	261	265	299	300	302	306	341	343	344	349	387	389	390	395	437	438	440	444	490	491	493	497
	1160	Capacity	48,203	48,871	50,284	52,443	47,779	48,447	49,860	52,019	46,544	47,212	48,625	50,784	44,418	45,086	**46,500**	48,658	41,821	42,489	43,902	46,061	39,449	40,118	41,531	43,690
		S/T	1.00	0.83	0.69	0.55	1.00	0.83	0.70	0.56	1.00	0.86	0.73	0.59	1.00	1.00	**0.74**	0.60	1.00	1.00	0.77	0.63	1.00	1.00	0.82	0.68
		Evap dT	28.20	26.28	22.67	18.94	28.15	26.22	22.62	18.89	28.42	26.49	22.89	19.16	28.13	26.20	**22.60**	18.87	27.87	25.95	22.34	18.61	29.08	27.15	23.55	19.82
		Pr Suc	125	126	129	134	132	133	137	142	138	140	143	148	144	145	**149**	154	149	151	154	159	156	158	161	166
		Pr Dis	261	262	264	269	302	303	305	309	345	346	348	352	391	392	**394**	398	440	441	443	448	493	494	496	501
	1350	Capacity	49,649	50,317	51,731	53,889	49,226	49,894	51,307	53,466	47,990	48,659	50,072	52,231	45,865	46,533	47,946	50,105	43,267	43,936	45,349	47,508	40,896	41,564	42,978	45,136
		S/T	1.00	0.87	0.74	0.60	1.00	0.88	0.74	0.60	1.00	0.90	0.77	0.63	1.00	1.00	0.79	0.65	1.00	1.00	0.81	0.67	1.00	1.00	0.86	0.72
		Evap dT	26.52	24.60	20.99	17.26	26.47	24.54	20.94	17.21	26.74	24.81	21.21	17.48	26.45	24.52	20.92	17.19	26.19	24.27	20.66	16.93	27.40	25.47	21.87	18.14
		Pr Suc	128	130	133	138	136	137	140	146	142	144	147	152	148	149	152	158	153	155	158	163	160	161	165	170
		Pr Dis	265	266	268	273	306	307	309	313	349	350	352	356	395	396	398	402	444	445	447	452	497	498	500	505
75	900	Capacity	48,121	48,790	50,203	52,362	47,698	48,366	49,779	51,938	46,463	47,131	48,544	50,703	44,337	45,005	46,419	48,577	41,740	42,408	43,821	45,980	39,368	40,037	41,450	43,609
		S/T	1.00	0.83	0.70	0.56	1.00	0.84	0.70	0.56	1.00	1.00	0.73	0.59	1.00	1.00	0.75	0.61	1.00	1.00	0.77	0.63	1.00	1.00	1.00	0.68
		Evap dT	33.80	31.87	28.27	24.54	33.75	31.82	28.21	24.48	34.02	32.09	28.49	24.75	33.73	31.80	28.20	24.46	33.47	31.54	27.94	24.21	34.68	32.75	29.15	25.41
		Pr Suc	124	125	128	134	131	133	136	141	138	139	142	148	143	145	148	153	149	150	153	158	155	157	160	165
		Pr Dis	259	260	262	267	300	301	303	307	343	344	346	350	389	390	392	396	438	439	441	446	491	492	494	499
	1160	Capacity	49,000	49,668	51,081	53,240	48,576	49,244	50,658	52,816	47,341	48,009	49,422	51,581	45,215	45,884	47,297	49,456	42,618	43,286	44,699	46,858	40,247	40,915	42,328	44,487
		S/T	1.00	0.93	0.79	0.65	1.00	0.93	0.80	0.66	1.00	1.00	0.82	0.68	1.00	1.00	0.84	0.70	1.00	1.00	0.87	0.73	1.000	1.000	1.000	0.776
		Evap dT	31.99	30.06	26.46	22.73	31.94	30.01	26.41	22.68	32.21	30.28	26.68	22.95	31.92	29.99	26.39	22.66	31.66	29.73	26.13	22.40	32.87	30.94	27.34	23.61
		Pr Suc	126	128	131	136	134	135	138	144	140	142	145	150	146	147	150	156	151	153	156	161	158	159	163	168
		Pr Dis	262	264	265	270	303	304	306	311	346	347	349	353	392	393	395	399	442	443	444	449	494	496	497	502
	1350	Capacity	50,446	51,115	52,528	54,686	50,023	50,691	52,104	54,263	48,787	49,456	50,869	53,028	46,662	47,330	48,744	50,902	44,065	44,733	46,146	48,305	41,693	42,361	43,775	45,933
		S/T	1.00	0.97	0.84	0.70	1.00	1.00	0.84	0.70	1.00	1.00	0.87	0.73	1.00	1.00	0.89	0.75	1.00	1.00	1.00	0.77	1.00	1.00	1.00	0.82
		Evap dT	30.31	28.38	24.78	21.05	30.26	28.33	24.73	21.00	30.53	28.60	25.00	21.27	30.24	28.31	24.71	20.98	29.98	28.05	24.45	20.72	31.19	29.26	25.66	21.93
		Pr Suc	130	132	135	140	138	139	142	147	144	146	149	154	150	151	154	159	155	156	160	165	162	163	166	172
		Pr Dis	266	267	269	274	307	308	310	315	350	351	353	357	396	397	399	403	445	447	448	453	498	499	501	506

IDB: Entering Indoor Dry Bulb Temperature

Shaded area reflects ACCA (TVA) conditions

kW = Total system power

High and low pressures are measured at the liquid and suction access fittings.

Amps: Unit amps (comp.+ evaporator + condenser fan motors)

Design Subcooling, 16 - 19 °F @ the liquid access fitting connection ARI 95 test conditions. Design Superheat 8 - 12°F @ the compressor suction access fitting connection.

			Outdoor Ambient Temperature																							
			65				75				85				95				105				115			
			Entering Indoor Wet Bulb Temperature																							
IDB	Airflow	ID WB	59	63	67	71	59	63	67	71	59	63	67	71	59	63	67	71	59	63	67	71	59	63	67	71
70	1500	Capacity	58,218	59,037	60,769	–	57,699	58,518	60,250	–	56,185	57,004	58,736	–	53,579	54,398	56,131	–	50,395	51,214	52,947	–	47,488	48,308	50,040	–
		S/T	0.60	0.53	0.40	–	0.61	0.54	0.41	–	0.63	0.56	0.43	–	0.65	0.58	0.45	–	1.00	0.60	0.47	–	1.00	0.65	0.52	–
		Evap dT	20.46	18.53	14.93	–	20.41	18.48	14.88	–	20.68	18.75	15.15	–	20.39	18.46	14.86	–	20.13	18.20	14.60	–	21.34	19.41	15.81	–
		Pr Suc	120	121	124	–	127	129	132	–	133	135	138	–	139	140	143	–	144	146	149	–	151	152	155	–
		Pr Dis	256	258	259	–	297	298	300	–	339	340	342	–	385	386	387	–	434	435	437	–	486	487	489	–
		TotalPower	3,522	3,519	3,512	–	3,953	3,949	3,942	–	4,433	4,430	4,423	–	4,953	4,950	4,943	–	5,534	5,531	5,524	–	6,216	6,213	6,205	–
	1640	Capacity	58,753	59,572	61,304	–	58,234	59,053	60,785	–	56,719	57,538	59,271	–	54,114	54,933	56,665	–	50,930	51,749	53,481	–	48,023	48,842	50,575	–
		S/T	0.64	0.57	0.44	–	0.65	0.57	0.44	–	0.67	0.60	0.47	–	0.69	0.62	0.49	–	1.00	0.64	0.51	–	1.00	0.69	0.56	–
		Evap dT	19.69	17.76	14.16	–	19.64	17.71	14.11	–	19.91	17.98	14.38	–	19.62	17.69	14.09	–	19.36	17.43	13.83	–	20.57	18.64	15.04	–
		Pr Suc	121	123	126	–	128	130	133	–	135	136	139	–	140	142	145	–	145	147	150	–	152	153	156	–
		Pr Dis	258	259	261	–	298	299	301	–	341	342	343	–	386	387	389	–	435	436	438	–	487	489	490	–
		TotalPower	3,537	3,534	3,526	–	3,968	3,964	3,957	–	4,448	4,445	4,437	–	4,968	4,965	4,957	–	5,549	5,546	5,538	–	6,231	6,227	6,220	–
	2250	Capacity	62,043	62,862	64,595	–	61,524	62,343	64,075	–	60,010	60,829	62,561	–	57,404	58,223	59,956	–	54,220	55,039	56,772	–	51,314	52,133	53,865	–
		S/T	0.67	0.60	0.47	–	0.68	0.61	0.48	–	0.71	0.63	0.50	–	1.00	0.65	0.52	–	1.00	0.67	0.54	–	1.00	0.72	0.59	–
		Evap dT	17.05	15.12	11.52	–	17.00	15.07	11.47	–	17.27	15.34	11.74	–	16.98	15.05	11.45	–	16.72	14.79	11.19	–	17.93	16.00	12.40	–
		Pr Suc	128	129	132	–	135	136	140	–	141	143	146	–	147	148	151	–	152	153	157	–	159	160	163	–
		Pr Dis	264	266	267	–	305	306	308	–	347	348	350	–	393	394	395	–	442	443	445	–	494	495	497	–
		TotalPower	3,587	3,584	3,576	–	4,018	4,014	4,007	–	4,498	4,495	4,487	–	5,018	5,015	5,008	–	5,599	5,596	5,589	–	6,281	6,278	6,270	–
75	1500	Capacity	58,252	59,071	60,803	63,449	57,733	58,552	60,284	62,930	56,218	57,037	58,770	61,416	53,613	54,432	56,165	58,811	50,429	51,248	52,980	55,627	47,522	48,341	50,074	52,720
		S/T	0.73	0.65	0.52	0.39	0.73	0.66	0.53	0.39	1.00	0.68	0.55	0.42	1.00	0.70	0.57	0.44	1.00	0.72	0.59	0.46	1.00	0.77	0.64	0.51
		Evap dT	24.70	22.78	19.17	15.44	24.65	22.72	19.12	15.39	24.92	22.99	19.39	15.66	24.63	22.70	19.10	15.37	24.37	22.44	18.84	15.11	25.58	23.65	20.05	16.32
		Pr Suc	120	121	124	130	127	129	132	137	134	135	138	143	139	140	143	148	144	146	149	154	151	152	155	160
		Pr Dis	257	258	260	264	297	298	300	304	339	340	342	347	385	386	388	392	434	435	437	441	486	487	489	494
		TotalPower	3,519	3,516	3,509	3,542	3,950	3,947	3,939	3,972	4,431	4,427	4,420	4,453	4,951	4,947	4,940	4,973	5,532	5,528	5,521	5,554	6,213	6,210	6,203	6,235
	1640	Capacity	58,787	59,606	61,338	63,984	58,267	59,087	60,819	63,465	56,753	57,572	59,305	61,951	54,148	**54,967**	56,699	59,345	50,964	51,783	53,515	56,161	48,057	48,876	50,608	53,255
		S/T	0.76	0.69	0.56	0.42	0.77	0.70	0.57	0.43	1.00	0.72	0.59	0.45	1.00	**0.74**	0.61	0.47	1.00	0.76	0.63	0.49	1.00	0.81	0.68	0.54
		Evap dT	23.93	22.01	18.40	14.67	23.88	21.95	18.35	14.62	24.15	22.22	18.62	14.89	23.86	**21.93**	18.33	14.60	23.60	21.67	18.07	14.34	24.81	22.88	19.28	15.55
		Pr Suc	121	123	126	131	128	130	133	138	135	136	139	144	140	**142**	145	150	145	147	150	155	152	153	157	162
		Pr Dis	258	259	261	265	298	300	301	306	341	342	344	348	386	**387**	389	394	435	436	438	443	488	489	491	495
		TotalPower	3,534	3,531	3,523	3,556	3,965	3,961	3,954	3,987	4,445	4,442	4,435	4,467	4,965	**4,962**	4,955	4,988	5,546	5,543	5,536	5,569	6,228	6,225	6,217	6,250
	2250	Capacity	62,077	62,896	64,628	67,274	61,558	62,377	64,109	66,755	60,043	60,863	62,595	65,241	57,438	58,257	59,990	62,636	54,254	55,073	56,806	59,452	51,347	52,166	53,899	56,545
		S/T	0.80	0.73	0.60	0.46	1.00	0.73	0.60	0.46	1.00	0.76	0.63	0.49	1.00	0.77	0.64	0.51	1.00	0.80	0.67	0.53	1.00	1.00	0.72	0.58
		Evap dT	21.30	19.37	15.76	12.03	21.24	19.31	15.71	11.98	21.51	19.58	15.98	12.25	21.22	19.29	15.69	11.96	20.96	19.04	15.43	11.70	22.17	20.24	16.64	12.91
		Pr Suc	128	129	132	137	135	136	140	145	141	143	146	151	147	148	151	156	152	154	157	162	159	160	163	168
		Pr Dis	265	266	268	272	305	306	308	312	347	348	350	355	393	394	396	400	442	443	445	449	494	495	497	502
		TotalPower	3,584	3,581	3,574	3,607	4,015	4,011	4,004	4,037	4,495	4,492	4,485	4,518	5,015	5,012	5,005	5,038	5,597	5,593	5,586	5,619	6,278	6,275	6,267	6,300

IDB: Entering Indoor Dry Bulb Temperature Shaded area reflects ACCA (TVA) conditions **kW = Total system power**

High and low pressures are measured at the liquid and suction access fittings. **Amps: Unit amps (comp.+ evaporator + condenser fan motors)**

Design Subcooling, 16 - 19 °F @ the liquid access fitting connection ARI 95 test conditions. Design Superheat 8 - 12°F @ the compressor suction access fitting connection.

			Outdoor Ambient Temperature																							
			65				75				85				95				105				115			
			Entering Indoor Wet Bulb Temperature																							
IDB	Airflow	ID WB	59	63	67	71	59	63	67	71	59	63	67	71	59	63	67	71	59	63	67	71	59	63	67	71
80	1500	Capacity	58,552	59,371	61,104	63,750	58,033	58,852	60,585	63,231	56,519	57,338	59,070	61,716	53,914	54,733	56,465	59,111	50,729	51,549	53,281	55,927	47,823	48,642	50,374	53,020
		S/T	0.85	0.78	0.65	0.51	1.00	0.78	0.65	0.51	1.00	0.81	0.68	0.54	1.00	0.82	0.69	0.56	1.00	1.00	0.72	0.58	1.00	1.00	0.76	0.63
		Evap dT	28.97	27.05	23.44	19.71	28.92	26.99	23.39	19.66	29.19	27.26	23.66	19.93	28.90	26.97	23.37	19.64	28.64	26.72	23.11	19.38	29.85	27.92	24.32	20.59
		Pr Suc	120	122	125	130	128	129	132	137	134	136	139	144	139	141	144	149	145	146	149	154	151	153	156	161
		Pr Dis	257	258	260	264	297	299	300	305	340	341	343	347	385	386	388	393	434	435	437	442	487	488	490	494
		TotalPower	3,522	3,518	3,511	3,544	3,952	3,949	3,941	3,974	4,433	4,429	4,422	4,455	4,953	4,949	4,942	4,975	5,534	5,531	5,523	5,556	6,216	6,212	6,205	6,238
	1640	Capacity	59,087	59,906	61,638	64,285	58,568	59,387	61,119	63,765	57,054	57,873	59,605	62,251	54,448	55,267	**57,000**	59,646	51,264	52,083	53,816	56,462	48,357	49,176	50,909	53,555
		S/T	0.89	0.81	0.68	0.54	1.00	0.82	0.69	0.55	1.00	0.84	0.71	0.57	1.00	0.86	**0.73**	0.59	1.00	1.00	0.75	0.61	1.00	1.00	0.80	0.66
		Evap dT	28.20	26.28	22.67	18.94	28.15	26.22	22.62	18.89	28.42	26.49	22.89	19.16	28.13	26.20	**22.60**	18.87	27.87	25.95	22.34	18.61	29.08	27.15	23.55	19.82
		Pr Suc	122	123	126	131	129	130	133	139	135	137	140	145	141	142	**145**	150	146	147	150	156	153	154	157	162
		Pr Dis	259	260	261	266	299	300	302	306	341	342	344	349	387	388	**390**	394	436	437	439	443	488	489	491	496
		TotalPower	3,536	3,533	3,526	3,559	3,967	3,964	3,956	3,989	4,448	4,444	4,437	4,470	4,968	4,964	**4,957**	4,990	5,549	5,545	5,538	5,571	6,230	6,227	6,220	6,253
	2250	Capacity	62,377	63,196	64,929	67,575	61,858	62,677	64,410	67,056	60,344	61,163	62,895	65,541	57,739	58,558	60,290	62,936	54,555	55,374	57,106	59,752	51,648	52,467	54,199	56,845
		S/T	1.00	0.85	0.72	0.58	1.00	0.85	0.72	0.58	1.00	0.88	0.75	0.61	1.00	1.00	0.76	0.63	1.00	1.00	0.79	0.65	1.00	1.00	0.84	0.70
		Evap dT	25.57	23.64	20.03	16.30	25.51	23.58	19.98	16.25	25.78	23.85	20.25	16.52	25.49	23.56	19.96	16.23	25.24	23.31	19.70	15.97	26.44	24.51	20.91	17.18
		Pr Suc	128	130	133	138	136	137	140	145	142	143	146	151	147	149	152	157	153	154	157	162	159	161	164	169
		Pr Dis	265	266	268	272	305	307	308	313	348	349	351	355	393	394	396	401	442	443	445	450	495	496	498	502
		TotalPower	3,587	3,583	3,576	3,609	4,017	4,014	4,006	4,039	4,498	4,494	4,487	4,520	5,018	5,014	5,007	5,040	5,599	5,595	5,588	5,621	6,280	6,277	6,270	6,303
85	1500	Capacity	59,529	60,348	62,081	64,727	59,010	59,829	61,562	64,208	57,496	58,315	60,047	62,694	54,891	55,710	57,442	60,088	51,707	52,526	54,258	56,904	48,800	49,619	51,351	53,997
		S/T	1.00	0.87	0.74	0.61	1.00	0.88	0.75	0.61	1.00	1.00	0.77	0.64	1.00	1.00	0.79	0.65	1.00	1.00	0.81	0.68	1.00	1.00	0.86	0.72
		Evap dT	32.76	30.83	27.23	23.50	32.71	30.78	27.18	23.45	32.98	31.05	27.45	23.72	32.69	30.76	27.16	23.43	32.43	30.50	26.90	23.17	33.64	31.71	28.11	24.38
		Pr Suc	122	124	127	132	129	131	134	139	136	137	140	145	141	143	146	151	146	148	151	156	153	155	158	163
		Pr Dis	258	259	261	266	299	300	302	306	341	342	344	348	386	388	389	394	436	437	438	443	488	489	491	495
		TotalPower	3,530	3,527	3,519	3,552	3,960	3,957	3,950	3,983	4,441	4,438	4,430	4,463	4,961	4,958	4,950	4,983	5,542	5,539	5,531	5,564	6,224	6,220	6,213	6,246
	1640	Capacity	60,064	60,883	62,616	65,262	59,545	60,364	62,096	64,743	58,031	58,850	60,582	63,228	55,425	56,244	57,977	60,623	52,241	53,060	54,793	57,439	49,335	50,154	51,886	54,532
		S/T	1.00	0.91	0.78	0.64	1.00	0.92	0.78	0.65	1.00	1.00	0.81	0.67	1.00	1.00	0.83	0.69	1.00	1.00	0.85	0.71	1.000	1.000	1.000	0.761
		Evap dT	31.99	30.06	26.46	22.73	31.94	30.01	26.41	22.68	32.21	30.28	26.68	22.95	31.92	29.99	26.39	22.66	31.66	29.73	26.13	22.40	32.87	30.94	27.34	23.61
		Pr Suc	123	125	128	133	131	132	135	140	137	139	142	147	142	144	147	152	148	149	152	157	154	156	159	164
		Pr Dis	260	261	263	267	300	301	303	308	342	344	345	350	388	389	391	395	437	438	440	444	489	490	492	497
		TotalPower	3,545	3,541	3,534	3,567	3,975	3,972	3,964	3,997	4,456	4,452	4,445	4,478	4,976	4,972	4,965	4,998	5,557	5,553	5,546	5,579	6,239	6,235	6,228	6,261
	2250	Capacity	63,354	64,173	65,906	68,552	62,835	63,654	65,387	68,033	61,321	62,140	63,872	66,519	58,716	59,535	61,267	63,913	55,532	56,351	58,083	60,729	52,625	53,444	55,176	57,822
		S/T	1.00	0.94	0.81	0.68	1.00	1.00	0.82	0.68	1.00	1.00	0.84	0.71	1.00	1.00	0.86	0.72	1.00	1.00	1.00	0.75	1.00	1.00	1.00	0.80
		Evap dT	29.35	27.42	23.82	20.09	29.30	27.37	23.77	20.04	29.57	27.64	24.04	20.31	29.28	27.35	23.75	20.02	29.02	27.09	23.49	19.76	30.23	28.30	24.70	20.97
		Pr Suc	130	132	135	140	137	139	142	147	144	145	148	153	149	151	154	159	154	156	159	164	161	162	165	171
		Pr Dis	266	267	269	274	307	308	310	314	349	350	352	356	394	396	397	402	444	445	446	451	496	497	499	503
		TotalPower	3,595	3,591	3,584	3,617	4,025	4,022	4,015	4,048	4,506	4,503	4,495	4,528	5,026	5,023	5,015	5,048	5,607	5,604	5,596	5,629	6,289	6,285	6,278	6,311

IDB: Entering Indoor Dry Bulb Temperature

Shaded area reflects AHRI (TVA) conditions

kW = Total system power

High and low pressures are measured at the liquid and suction access fittings.

Amps: Unit amps (comp.+ evaporator + condenser fan motors)

Design Subcooling, 16 - 19 °F @ the liquid access fitting connection ARI 95 test conditions. Design Superheat 8 - 12°F @ the compressor suction access fitting connection.

			Outdoor Ambient Temperature																							
			65				75				85				95				105				115			
			Entering Indoor Wet Bulb Temperature																							
IDB	Airflow	ID WB	59	63	67	71	59	63	67	71	59	63	67	71	59	63	67	71	59	63	67	71	59	63	67	71
70	900	Capacity	58,218	59,037	60,769	-	57,699	58,518	60,250	-	56,185	57,004	58,736	-	53,579	54,398	56,131	-	50,395	51,214	52,947	-	47,488	48,308	50,040	-
		S/T	0.60	0.53	0.40	-	0.61	0.54	0.41	-	0.63	0.56	0.43	-	0.65	0.58	0.45	-	1.00	0.60	0.47	-	1.00	0.65	0.52	-
		Evap dT	20.46	18.53	14.93	-	20.41	18.48	14.88	-	20.68	18.75	15.15	-	20.39	18.46	14.86	-	20.13	18.20	14.60	-	21.34	19.41	15.81	-
		Pr Suc	120	121	124	-	127	129	132	-	133	135	138	-	139	140	143	-	144	146	149	-	151	152	155	-
		Pr Dis	256	258	259	-	297	298	300	-	339	340	342	-	385	386	387	-	434	435	437	-	486	487	489	-
	1160	Capacity	58,753	59,572	61,304	-	58,234	59,053	60,785	-	56,719	57,538	59,271	-	54,114	54,933	56,665	-	50,930	51,749	53,481	-	48,023	48,842	50,575	-
		S/T	0.64	0.57	0.44	-	0.65	0.57	0.44	-	0.67	0.60	0.47	-	0.69	0.62	0.49	-	1.00	0.64	0.51	-	1.00	0.69	0.56	-
		Evap dT	19.69	17.76	14.16	-	19.64	17.71	14.11	-	19.91	17.98	14.38	-	19.62	17.69	14.09	-	19.36	17.43	13.83	-	20.57	18.64	15.04	-
		Pr Suc	121	123	126	-	128	130	133	-	135	136	139	-	140	142	145	-	145	147	150	-	152	153	156	-
		Pr Dis	258	259	261	-	298	299	301	-	341	342	343	-	386	387	389	-	435	436	438	-	487	489	490	-
	1350	Capacity	62,043	62,862	64,595	-	61,524	62,343	64,075	-	60,010	60,829	62,561	-	57,404	58,223	59,956	-	54,220	55,039	56,772	-	51,314	52,133	53,865	-
		S/T	0.67	0.60	0.47	-	0.68	0.61	0.48	-	0.71	0.63	0.50	-	1.00	0.65	0.52	-	1.00	0.67	0.54	-	1.00	0.72	0.59	-
		Evap dT	17.05	15.12	11.52	-	17.00	15.07	11.47	-	17.27	15.34	11.74	-	16.98	15.05	11.45	-	16.72	14.79	11.19	-	17.93	16.00	12.40	-
		Pr Suc	128	129	132	-	135	136	140	-	141	143	146	-	147	148	151	-	152	153	157	-	159	160	163	-
		Pr Dis	264	266	267	-	305	306	308	-	347	348	350	-	393	394	395	-	442	443	445	-	494	495	497	-
75	900	Capacity	58,252	59,071	60,803	63,449	57,733	58,552	60,284	62,930	56,218	57,037	58,770	61,416	53,613	54,432	56,165	58,811	50,429	51,248	52,980	55,627	47,522	48,341	50,074	52,720
		S/T	0.73	0.65	0.52	0.39	0.73	0.66	0.53	0.39	1.00	0.68	0.55	0.42	1.00	0.70	0.57	0.44	1.00	0.72	0.59	0.46	1.00	0.77	0.64	0.51
		Evap dT	24.70	22.78	19.17	15.44	24.65	22.72	19.12	15.39	24.92	22.99	19.39	15.66	24.63	22.70	19.10	15.37	24.37	22.44	18.84	15.11	25.58	23.65	20.05	16.32
		Pr Suc	120	121	124	130	127	129	132	137	134	135	138	143	139	140	143	148	144	146	149	154	151	152	155	160
		Pr Dis	257	258	260	264	297	298	300	304	339	340	342	347	385	386	388	392	434	435	437	441	486	487	489	494
	1160	Capacity	58,787	59,606	61,338	63,984	58,267	59,087	60,819	63,465	56,753	57,572	59,305	61,951	54,148	**54,967**	56,699	59,345	50,964	51,783	53,515	56,161	48,057	48,876	50,608	53,255
		S/T	0.76	0.69	0.56	0.42	0.77	0.70	0.57	0.43	1.00	0.72	0.59	0.45	1.00	**0.74**	0.61	0.47	1.00	0.76	0.63	0.49	1.00	0.81	0.68	0.54
		Evap dT	23.93	22.01	18.40	14.67	23.88	21.95	18.35	14.62	24.15	22.22	18.62	14.89	23.86	**21.93**	18.33	14.60	23.60	21.67	18.07	14.34	24.81	22.88	19.28	15.55
		Pr Suc	121	123	126	131	128	130	133	138	135	136	139	144	140	**142**	145	150	145	147	150	155	152	153	157	162
		Pr Dis	258	259	261	265	298	300	301	306	341	342	344	348	386	**387**	389	394	435	436	438	443	488	489	491	495
	1350	Capacity	62,077	62,896	64,628	67,274	61,558	62,377	64,109	66,755	60,043	60,863	62,595	65,241	57,438	58,257	59,990	62,636	54,254	55,073	56,806	59,452	51,347	52,166	53,899	56,545
		S/T	0.80	0.73	0.60	0.46	1.00	0.73	0.60	0.46	1.00	0.76	0.63	0.49	1.00	0.77	0.64	0.51	1.00	0.80	0.67	0.53	1.00	1.00	0.72	0.58
		Evap dT	21.30	19.37	15.76	12.03	21.24	19.31	15.71	11.98	21.51	19.58	15.98	12.25	21.22	19.29	15.69	11.96	20.96	19.04	15.43	11.70	22.17	20.24	16.64	12.91
		Pr Suc	128	129	132	137	135	136	140	145	141	143	146	151	147	148	151	156	152	154	157	162	159	160	163	168
		Pr Dis	265	266	268	272	305	306	308	312	347	348	350	355	393	394	396	400	442	443	445	449	494	495	497	502

IDB: Entering Indoor Dry Bulb Temperature Shaded area reflects ACCA (TVA) conditions **kW = Total system power**

High and low pressures are measured at the liquid and suction access fittings. **Amps: Unit amps (comp.+ evaporator + condenser fan motors)**

Design Subcooling, 16 - 19 °F @ the liquid access fitting connection ARI 95 test conditions. Design Superheat 8 - 12°F @ the compressor suction access fitting connection.

			Outdoor Ambient Temperature																							
			65				75				85				95				105				115			
			Entering Indoor Wet Bulb Temperature																							
IDB	Airflow	ID WB	59	63	67	71	59	63	67	71	59	63	67	71	59	63	67	71	59	63	67	71	59	63	67	71
70	900	Capacity	58,552	59,371	61,104	63,750	58,033	58,852	60,585	63,231	56,519	57,338	59,070	61,716	53,914	54,733	56,465	59,111	50,729	51,549	53,281	55,927	47,823	48,642	50,374	53,020
		S/T	0.85	0.78	0.65	0.51	1.00	0.78	0.65	0.51	1.00	0.81	0.68	0.54	1.00	0.82	0.69	0.56	1.00	1.00	0.72	0.58	1.00	1.00	0.76	0.63
		Evap dT	28.97	27.05	23.44	19.71	28.92	26.99	23.39	19.66	29.19	27.26	23.66	19.93	28.90	26.97	23.37	19.64	28.64	26.72	23.11	19.38	29.85	27.92	24.32	20.59
		Pr Suc	120	122	125	130	128	129	132	137	134	136	139	144	139	141	144	149	145	146	149	154	151	153	156	161
		Pr Dis	257	258	260	264	297	299	300	305	340	341	343	347	385	386	388	393	434	435	437	442	487	488	490	494
	1160	Capacity	59,087	59,906	61,638	64,285	58,568	59,387	61,119	63,765	57,054	57,873	59,605	62,251	54,448	55,267	**57,000**	59,646	51,264	52,083	53,816	56,462	48,357	49,176	50,909	53,555
		S/T	0.89	0.81	0.68	0.54	1.00	0.82	0.69	0.55	1.00	0.84	0.71	0.57	1.00	0.86	**0.73**	0.59	1.00	1.00	0.75	0.61	1.00	1.00	0.80	0.66
		Evap dT	28.20	26.28	22.67	18.94	28.15	26.22	22.62	18.89	28.42	26.49	22.89	19.16	28.13	26.20	**22.60**	18.87	27.87	25.95	22.34	18.61	29.08	27.15	23.55	19.82
		Pr Suc	122	123	126	131	129	130	133	139	135	137	140	145	141	142	**145**	150	146	147	150	156	153	154	157	162
		Pr Dis	259	260	261	266	299	300	302	306	341	342	344	349	387	388	**390**	394	436	437	439	443	488	489	491	496
	1350	Capacity	62,377	63,196	64,929	67,575	61,858	62,677	64,410	67,056	60,344	61,163	62,895	65,541	57,739	58,558	60,290	62,936	54,555	55,374	57,106	59,752	51,648	52,467	54,199	56,845
		S/T	1.00	0.85	0.72	0.58	1.00	0.85	0.72	0.58	1.00	0.88	0.75	0.61	1.00	1.00	0.76	0.63	1.00	1.00	0.79	0.65	1.00	1.00	0.84	0.70
		Evap dT	25.57	23.64	20.03	16.30	25.51	23.58	19.98	16.25	25.78	23.85	20.25	16.52	25.49	23.56	19.96	16.23	25.24	23.31	19.70	15.97	26.44	24.51	20.91	17.18
		Pr Suc	128	130	133	138	136	137	140	145	142	143	146	151	147	149	152	157	153	154	157	162	159	161	164	169
		Pr Dis	265	266	268	272	305	307	308	313	348	349	351	355	393	394	396	401	442	443	445	450	495	496	498	502
75	900	Capacity	59,529	60,348	62,081	64,727	59,010	59,829	61,562	64,208	57,496	58,315	60,047	62,694	54,891	55,710	57,442	60,088	51,707	52,526	54,258	56,904	48,800	49,619	51,351	53,997
		S/T	1.00	0.87	0.74	0.61	1.00	0.88	0.75	0.61	1.00	1.00	0.77	0.64	1.00	1.00	0.79	0.65	1.00	1.00	0.81	0.68	1.00	1.00	0.86	0.72
		Evap dT	32.76	30.83	27.23	23.50	32.71	30.78	27.18	23.45	32.98	31.05	27.45	23.72	32.69	30.76	27.16	23.43	32.43	30.50	26.90	23.17	33.64	31.71	28.11	24.38
		Pr Suc	122	124	127	132	129	131	134	139	136	137	140	145	141	143	146	151	146	148	151	156	153	155	158	163
		Pr Dis	258	259	261	266	299	300	302	306	341	342	344	348	386	388	389	394	436	437	438	443	488	489	491	495
	1160	Capacity	60,064	60,883	62,616	65,262	59,545	60,364	62,096	64,743	58,031	58,850	60,582	63,228	55,425	56,244	57,977	60,623	52,241	53,060	54,793	57,439	49,335	50,154	51,886	54,532
		S/T	1.00	0.91	0.78	0.64	1.00	0.92	0.78	0.65	1.00	1.00	0.81	0.67	1.00	1.00	0.83	0.69	1.00	1.00	0.85	0.71	1.000	1.000	1.000	0.761
		Evap dT	31.99	30.06	26.46	22.73	31.94	30.01	26.41	22.68	32.21	30.28	26.68	22.95	31.92	29.99	26.39	22.66	31.66	29.73	26.13	22.40	32.87	30.94	27.34	23.61
		Pr Suc	123	125	128	133	131	132	135	140	137	139	142	147	142	144	147	152	148	149	152	157	154	156	159	164
		Pr Dis	260	261	263	267	300	301	303	308	342	344	345	350	388	389	391	395	437	438	440	444	489	490	492	497
	1350	Capacity	63,354	64,173	65,906	68,552	62,835	63,654	65,387	68,033	61,321	62,140	63,872	66,519	58,716	59,535	61,267	63,913	55,532	56,351	58,083	60,729	52,625	53,444	55,176	57,822
		S/T	1.00	0.94	0.81	0.68	1.00	1.00	0.82	0.68	1.00	1.00	0.84	0.71	1.00	1.00	0.86	0.72	1.00	1.00	1.00	0.75	1.00	1.00	1.00	0.80
		Evap dT	29.35	27.42	23.82	20.09	29.30	27.37	23.77	20.04	29.57	27.64	24.04	20.31	29.28	27.35	23.75	20.02	29.02	27.09	23.49	19.76	30.23	28.30	24.70	20.97
		Pr Suc	130	132	135	140	137	139	142	147	144	145	148	153	149	151	154	159	154	156	159	164	161	162	165	171
		Pr Dis	266	267	269	274	307	308	310	314	349	350	352	356	394	396	397	402	444	445	446	451	496	497	499	503

IDB: Entering Indoor Dry Bulb Temperature

Shaded area reflects ACCA (TVA) conditions

kW = Total system power

High and low pressures are measured at the liquid and suction access fittings.

Amps: Unit amps (comp.+ evaporator + condenser fan motors)

Design Subcooling, 16 - 19 °F @ the liquid access fitting connection ARI 95 test conditions. Design Superheat 8 - 12°F @ the compressor suction access fitting connection.

Heating Rating Table - Natural Gas and Propane

Unit	Gas Heat	Stage 1 Input/ Output (MBH)	Stage 2 Input/ Output (MBH)	Temp Rise High (ºF)	Temp Rise Low (ºF)	Thermal Efficiency (%)
DBG036*B	Low	45 / 36	33.75 / 27	15 - 45	10 - 40	80%
	Medium	70 / 56	52.5 / 42	25 - 55	20 - 50	80%
	High	90 / 72	67.5 / 54	45 - 75	40 - 70	80%
DBG048*B	Low	70 / 56	52.5 / 42	20 - 50	15 - 45	80%
	Medium	90 / 72	67.5 / 54	30 - 60	25 -55	80%
	High	115 / 92	86.25 / 69	40 - 70	35 - 65	80%
DBG060*B	Low	90 / 72	67.5 / 54	25 - 55	20 - 50	80%
	Medium	115 / 92	86.25 / 69	35 - 65	30 - 60	80%
	High	140 /112	105 / 84	45 - 75	40 - 70	80%

Heat Exchanger and Burner Orifice Specifications

Unit	High Fire Rate Btu/Hr	Number of Burners	NG Orifice	LP Orifice
DBG036*B	45,000	2	43	55
	70,000	3	43	55
	90,000	5	45	56
DBG048*B	70,000	3	43	55
	90,000	4	43	55
	115,000	5	43	55
DBG060*B	90,000	4	43	55
	115,000	5	43	55
	140,000	6	43	55

Recommended Min-Max Airflow Range

Unit	High Fire Rate Btu/Hr	Heating Minimum Scfm	Cooling Minimum Scfm	Maximum Scfm
DBG036*B	45,000	750	900	1350
	70,000	950		
	90,000	900		
DBG048*B	70,000	1050	1200	1800
	90,000	1125		
	115,000	1225		
DBG060*B	90,000	1225	1500	2250
	115,000	1325		
	140,000	1400		

Heating

Heating Rating Table - Natural Gas and Propane

Unit	Gas Heat	Stage 1 Input/ Output (MBH)	Stage 2 Input/ Output (MBH)	Temp Rise High (ºF)	Temp Rise Low (ºF)	Thermal Efficiency (%)
DBG036*C	Low	45 / 36	33.75 / 27	15 - 45	10 - 40	80%
	Medium	70 / 56	52.5 / 42	25 - 55	20 - 50	80%
	High	90 / 72	67.5 / 54	45 - 75	40 - 70	80%
DBG048*C	Low	70 / 56	52.5 / 42	25 - 55	20 - 50	80%
	Medium	90 / 72	67.5 / 54	30 - 60	25 - 55	80%
	High	115 / 92	86.25 / 69	40 - 70	35 - 65	80%
DBG060*C	Low	90 / 72	67.5 / 54	25 - 55	20 - 50	80%
	Medium	115 / 92	86.25 / 69	35 - 65	30 - 60	80%
	High	140 /112	105 / 84	45 - 75	40 - 70	80%

Heat Exchanger and Burner Orifice Specifications

Unit	High Fire Rate Btu/Hr	Number of Burners	NG Orifice	LP Orifice
DBG036*C	45,000	2	43	55
	70,000	3	43	55
	90,000	5	45	56
DBG048*C	70,000	3	43	55
	90,000	4	43	55
	115,000	5	43	55
DBG060*C	90,000	4	43	55
	115,000	5	43	55
	140,000	6	43	55

Recommended Min-Max Airflow Range

Unit	High Fire Rate Btu/Hr	Heating Minimum Scfm	Cooling Minimum Scfm	Maximum Scfm
DBG036*C	45,000	750	900	1350
	70,000	950		
	90,000	900		
DBG048*C	70,000	950	1200	1800
	90,000	1125		
	115,000	1225		
DBG060*C	90,000	1225	1500	2250
	115,000	1325		
	140,000	1400		

DBG036*B Standard Static Horizontal

ESP, In H2O	TURNS OPEN																	
	0			1			2			3			4			5		
	CFM	RPM	BHP	CFM	RPM	BHP	CFM	RPM	BHP	CFM	RPM	BHP	CFM	RPM	BHP	CFM	RPM	BHP
0.1	-	-	-	-	-	-	-	-	-	-	-	-	1205	655	0.19	1066	600	0.14
0.2	-	-	-	-	-	-	-	-	-	1231	715	0.23	1067	655	0.17	908	600	0.12
0.3	-	-	-	-	-	-	1270	775	0.28	1093	715	0.20	905	655	0.14	-	-	-
0.4	-	-	-	1336	840	0.34	1134	775	0.25	931	715	0.18	-	-	-	-	-	-
0.5	-	-	-	1204	840	0.31	976	775	0.22	-	-	-	-	-	-	-	-	-
0.6	1271	900	0.38	1053	840	0.28	-	-	-	-	-	-	-	-	-	-	-	-
0.7	1128	900	0.34	-	-	-	-	-	-	-	-	-	-	-	-	-	-	-

DBG036*C High Static Horizontal[1]

ESP, In H2O	TURNS OPEN																	
	0			1			2			3			4			5		
	CFM	RPM	BHP	CFM	RPM	BHP	CFM	RPM	BHP	CFM	RPM	BHP	CFM	RPM	BHP	CFM	RPM	BHP
0.7	-	-	-	-	-	-	-	-	-	-	-	-	-	-	-	1285	935	0.42
0.8	-	-	-	-	-	-	-	-	-	-	-	-	1346	990	0.46	1134	935	0.35
0.9	-	-	-	-	-	-	-	-	-	-	-	-	1203	990	0.42	954	935	0.31
1.0	-	-	-	-	-	-	-	-	-	1310	1050	0.51	1034	990	0.38	-	-	-
1.1	-	-	-	-	-	-	-	-	-	1156	1050	0.46	-	-	-	-	-	-
1.2	-	-	-	-	-	-	1253	1105	0.55	970	1050	0.41	-	-	-	-	-	-
1.3	-	-	-	-	-	-	1083	1105	0.50	-	-	-	-	-	-	-	-	-
1.4	-	-	-	1217	1160	0.61	868	1105	0.47	-	-	-	-	-	-	-	-	-
1.5	1338	1215	0.72	1034	1160	0.55	-	-	-	-	-	-	-	-	-	-	-	-
1.6	1177	1215	0.66	-	-	-	-	-	-	-	-	-	-	-	-	-	-	-

[1] To operate below 0.7" H_2O external static pressure, motor and blower sheave must be changed to VL34 and AK59 respectively, or equivalents.

DBG036*B Standard Static Downshot

ESP, In H2O	TURNS OPEN																	
	0			1			2			3			4			5		
	CFM	RPM	BHP	CFM	RPM	BHP	CFM	RPM	BHP	CFM	RPM	BHP	CFM	RPM	BHP	CFM	RPM	BHP
0.1	-	-	-	-	-	-	1330	775	0.29	1170	715	0.21	1010	655	0.15	860	600	0.10
0.2	-	-	-	-	-	-	1211	775	0.26	1038	715	0.19	861	655	0.13	-	-	-
0.3	-	-	-	1278	840	0.33	1080	775	0.24	889	715	0.17	-	-	-	-	-	-
0.4	1341	900	0.40	1151	840	0.30	933	775	0.21	-	-	-	-	-	-	-	-	-
0.5	1218	900	0.37	1009	840	0.27	-	-	-	-	-	-	-	-	-	-	-	-
0.6	1081	900	0.33	-	-	-	-	-	-	-	-	-	-	-	-	-	-	-
0.7	926	900	0.30	-	-	-	-	-	-	-	-	-	-	-	-	-	-	-

DBG036*C High Static Downshot[1]

ESP, In H2O	TURNS OPEN																	
	0			1			2			3			4			5		
	CFM	RPM	BHP	CFM	RPM	BHP	CFM	RPM	BHP	CFM	RPM	BHP	CFM	RPM	BHP	CFM	RPM	BHP
0.6	-	-	-	-	-	-	-	-	-	-	-	-	-	-	-	1314	935	0.43
0.7	-	-	-	-	-	-	-	-	-	-	-	-	-	-	-	1165	935	0.39
0.8	-	-	-	-	-	-	-	-	-	-	-	-	1235	990	0.43	995	935	0.32
0.9	-	-	-	-	-	-	-	-	-	1345	1050	0.53	1072	990	0.39	-	-	-
1.0	-	-	-	-	-	-	-	-	-	1193	1050	0.48	881	990	0.35	-	-	-
1.1	-	-	-	-	-	-	1291	1105	0.58	1019	1050	0.44	-	-	-	-	-	-
1.2	-	-	-	-	-	-	1129	1105	0.53	-	-	-	-	-	-	-	-	-
1.3	-	-	-	1259	1160	0.63	937	1105	0.48	-	-	-	-	-	-	-	-	-
1.4	-	-	-	1088	1160	0.58	-	-	-	-	-	-	-	-	-	-	-	-
1.5	1225	1215	0.70	882	1160	0.52	-	-	-	-	-	-	-	-	-	-	-	-
1.6	1043	1215	0.64	-	-	-	-	-	-	-	-	-	-	-	-	-	-	-

[1] To operate below 0.6" H_2O external static pressure, motor and blower sheave must be changed to VL34 and AK59 respectively, or equivalents.

DBG048*B Standard Static Horizontal

ESP, In H2O	TURNS OPEN																	
	0			1			2			3			4			5		
	CFM	RPM	BHP	CFM	RPM	BHP	CFM	RPM	BHP	CFM	RPM	BHP	CFM	RPM	BHP	CFM	RPM	BHP
0.1	-	-	-	1792	930	0.58	1651	870	0.47	1512	810	0.37	1386	755	0.29	1244	695	0.22
0.2	-	-	-	1707	930	0.55	1560	870	0.44	1412	810	0.34	1277	755	0.27	-	-	-
0.3	1764	990	0.64	1617	930	0.51	1462	870	0.41	1304	810	0.31	-	-	-	-	-	-
0.4	1677	990	0.60	1522	930	0.48	1356	870	0.38	-	-	-	-	-	-	-	-	-
0.5	1584	990	0.57	1419	930	0.45	1240	870	0.34	-	-	-	-	-	-	-	-	-
0.6	1485	990	0.53	1307	930	0.41	-	-	-	-	-	-	-	-	-	-	-	-
0.7	1377	990	0.50	-	-	-	-	-	-	-	-	-	-	-	-	-	-	-

DBG048*C High Static Horizontal[1]

ESP, In H2O	TURNS OPEN																	
	0			1			2			3			4			5		
	CFM	RPM	BHP	CFM	RPM	BHP	CFM	RPM	BHP	CFM	RPM	BHP	CFM	RPM	BHP	CFM	RPM	BHP
0.6	-	-	-	-	-	-	-	-	-	-	-	-	1659	1080	0.71	1495	1020	0.57
0.7	-	-	-	-	-	-	-	-	-	1733	1140	0.83	1573	1080	0.67	1398	1020	0.53
0.8	-	-	-	-	-	-	-	-	-	1650	1140	0.79	1481	1080	0.63	1293	1020	0.50
0.9	-	-	-	-	-	-	1735	1200	0.92	1562	1140	0.75	1381	1080	0.59	-	-	-
1.0	-	-	-	-	-	-	1651	1200	0.87	1468	1140	0.70	1273	1080	0.55	-	-	-
1.1	-	-	-	1744	1260	1.01	1562	1200	0.83	1365	1140	0.66	-	-	-	-	-	-
1.2	-	-	-	1659	1260	0.97	1465	1200	0.78	1252	1140	0.62	-	-	-	-	-	-
1.3	1762	1320	1.13	1569	1260	0.92	1361	1200	0.74	-	-	-	-	-	-	-	-	-
1.4	1677	1320	1.08	1472	1260	0.87	1245	1200	0.69	-	-	-	-	-	-	-	-	-
1.5	1586	1320	1.03	1366	1260	0.82	-	-	-	-	-	-	-	-	-	-	-	-
1.6	1488	1320	0.98	1248	1260	0.77	-	-	-	-	-	-	-	-	-	-	-	-
1.7	1382	1320	0.92	-	-	-	-	-	-	-	-	-	-	-	-	-	-	-
1.8	1263	1320	0.86	-	-	-	-	-	-	-	-	-	-	-	-	-	-	-

[1] To operate below 0.6" H_2O external static pressure, motor and blower sheave must be changed to VL40 and AK66 respectively, or equivalents.

DBG048*B Standard Static Downshot

ESP, In H2O	TURNS OPEN																	
	0			1			2			3			4			5		
	CFM	RPM	BHP	CFM	RPM	BHP	CFM	RPM	BHP	CFM	RPM	BHP	CFM	RPM	BHP	CFM	RPM	BHP
0.1	-	-	-	1739	930	0.55	1580	870	0.44	1423	810	0.34	1280	755	0.26	-	-	-
0.2	-	-	-	1643	930	0.52	1477	870	0.41	1310	810	0.31	-	-	-	-	-	-
0.3	1707	990	0.61	1542	930	0.49	1366	870	0.38	-	-	-	-	-	-	-	-	-
0.4	1609	990	0.58	1433	930	0.46	1246	870	0.35	-	-	-	-	-	-	-	-	-
0.5	1504	990	0.54	1317	930	0.42	-	-	-	-	-	-	-	-	-	-	-	-
0.6	1391	990	0.51	-	-	-	-	-	-	-	-	-	-	-	-	-	-	-
0.7	1269	990	0.47	-	-	-	-	-	-	-	-	-	-	-	-	-	-	-

DBG048*C High Static Downshot[1]

ESP, In H2O	TURNS OPEN																	
	0			1			2			3			4			5		
	CFM	RPM	BHP	CFM	RPM	BHP	CFM	RPM	BHP	CFM	RPM	BHP	CFM	RPM	BHP	CFM	RPM	BHP
0.6	-	-	-	-	-	-	-	-	-	1761	1140	0.84	1588	1080	0.69	1403	1020	0.55
0.7	-	-	-	-	-	-	-	-	-	1672	1140	0.80	1491	1080	0.65	1294	1020	0.51
0.8	-	-	-	-	-	-	1764	1200	0.94	1578	1140	0.76	1387	1080	0.61	-	-	-
0.9	-	-	-	-	-	-	1675	1200	0.90	1479	1140	0.72	1275	1080	0.57	-	-	-
1.0	-	-	-	1775	1260	1.04	1580	1200	0.85	1372	1140	0.68	-	-	-	-	-	-
1.1	-	-	-	1685	1260	1.00	1478	1200	0.81	1256	1140	0.64	-	-	-	-	-	-
1.2	1796	1320	1.16	1589	1260	0.95	1369	1200	0.76	-	-	-	-	-	-	-	-	-
1.3	1705	1320	1.11	1487	1260	0.90	1251	1200	0.71	-	-	-	-	-	-	-	-	-
1.4	1609	1320	1.06	1377	1260	0.85	-	-	-	-	-	-	-	-	-	-	-	-
1.5	1506	1320	1.01	1256	1260	0.80	-	-	-	-	-	-	-	-	-	-	-	-
1.6	1396	1320	0.96	-	-	-	-	-	-	-	-	-	-	-	-	-	-	-
1.7	1275	1320	0.90	-	-	-	-	-	-	-	-	-	-	-	-	-	-	-
1.8	1141	1320	0.84	-	-	-	-	-	-	-	-	-	-	-	-	-	-	-

[1] To operate below 0.6" H_2O external static pressure, motor and blower sheave must be changed to VL34 and AK59 respectively, or equivalents.

DBG060*B Standard Static Horizontal

ESP, In H2O	TURNS OPEN																	
	0			1			2			3			4			5		
	CFM	RPM	BHP	CFM	RPM	BHP	CFM	RPM	BHP	CFM	RPM	BHP	CFM	RPM	BHP	CFM	RPM	BHP
0.1	-	-	-	2122	1075	0.92	1964	1005	0.74	1814	940	0.60	1665	875	0.47	1502	805	0.36
0.2	-	-	-	2050	1075	0.88	1887	1005	0.71	1731	940	0.57	1574	875	0.45	-	-	-
0.3	-	-	-	1976	1075	0.85	1807	1005	0.67	1642	940	0.53	-	-	-	-	-	-
0.4	2060	1140	0.99	1898	1075	0.81	1721	1005	0.64	1548	940	0.50	-	-	-	-	-	-
0.5	1985	1140	0.95	1817	1075	0.77	1631	1005	0.60	-	-	-	-	-	-	-	-	-
0.6	1906	1140	0.91	1731	1075	0.73	1535	1005	0.57	-	-	-	-	-	-	-	-	-
0.7	1824	1140	0.87	1640	1075	0.69	-	-	-	-	-	-	-	-	-	-	-	-
0.8	1737	1140	0.83	1542	1075	0.65	-	-	-	-	-	-	-	-	-	-	-	-

DBG060*C High Static Horizontal[1]

ESP, In H2O	TURNS OPEN																	
	0			1			2			3			4			5		
	CFM	RPM	BHP	CFM	RPM	BHP	CFM	RPM	BHP	CFM	RPM	BHP	CFM	RPM	BHP	CFM	RPM	BHP
0.8	-	-	-	-	-	-	2182	1340	1.44	2017	1275	1.20	1840	1210	0.99	1650	1140	0.79
0.9	-	-	-	-	-	-	2117	1340	1.39	1946	1275	1.16	1762	1210	0.95	1562	1140	0.75
1.0	-	-	-	2233	1410	1.63	2049	1340	1.35	1872	1275	1.12	1680	1210	0.90	-	-	-
1.1	-	-	-	2169	1410	1.58	1978	1340	1.30	1794	1275	1.07	1592	1210	0.86	-	-	-
1.2	-	-	-	2102	1410	1.53	1905	1340	1.25	1712	1275	1.02	-	-	-	-	-	-
1.3	2216	1475	1.77	2033	1410	1.48	1827	1340	1.20	1624	1275	0.98	-	-	-	-	-	-
1.4	2150	1475	1.71	1961	1410	1.43	1746	1340	1.15	1531	1275	0.93	-	-	-	-	-	-
1.5	2081	1475	1.66	1885	1410	1.38	1660	1340	1.10	-	-	-	-	-	-	-	-	-
1.6	2010	1475	1.61	1805	1410	1.33	1567	1340	1.05	-	-	-	-	-	-	-	-	-
1.7	1936	1475	1.55	1721	1410	1.27	-	-	-	-	-	-	-	-	-	-	-	-
1.8	1857	1475	1.49	1631	1410	1.21	-	-	-	-	-	-	-	-	-	-	-	-

[1] To operate below 0.6" H_2O external static pressure, motor and blower sheave must be changed to VL40 and AK66 respectively, or equivalents.

DBG060*B Standard Static Downshot

ESP, In H2O	TURNS OPEN																	
	0			1			2			3			4			5		
	CFM	RPM	BHP	CFM	RPM	BHP	CFM	RPM	BHP	CFM	RPM	BHP	CFM	RPM	BHP	CFM	RPM	BHP
0.1	-	-	-	2112	1075	0.90	1934	1005	0.72	1764	940	0.57	1595	875	0.45	-	-	-
0.2	-	-	-	2031	1075	0.86	1847	1005	0.69	1670	940	0.54	-	-	-	-	-	-
0.3	-	-	-	1947	1075	0.83	1755	1005	0.65	1570	940	0.51	-	-	-	-	-	-
0.4	2042	1140	0.97	1860	1075	0.79	1659	1005	0.62	-	-	-	-	-	-	-	-	-
0.5	1957	1140	0.93	1767	1075	0.75	1557	1005	0.58	-	-	-	-	-	-	-	-	-
0.6	1869	1140	0.89	1670	1075	0.71	-	-	-	-	-	-	-	-	-	-	-	-
0.7	1775	1140	0.85	1567	1075	0.67	-	-	-	-	-	-	-	-	-	-	-	-
0.8	1677	1140	0.81	-	-	-	-	-	-	-	-	-	-	-	-	-	-	-

DBG060*C High Static Downshot[1]

ESP, In H2O	TURNS OPEN																	
	0			1			2			3			4			5		
	CFM	RPM	BHP	CFM	RPM	BHP	CFM	RPM	BHP	CFM	RPM	BHP	CFM	RPM	BHP	CFM	RPM	BHP
0.8	-	-	-	-	-	-	2180	1340	1.43	1993	1275	1.19	1794	1210	0.97	1578	1140	0.76
0.9	-	-	-	-	-	-	2106	1340	1.38	1913	1275	1.14	1705	1210	0.93	-	-	-
1.0	-	-	-	2239	1410	1.62	2030	1340	1.33	1829	1275	1.10	1612	1210	0.88	-	-	-
1.1	-	-	-	2166	1410	1.57	1950	1340	1.28	1741	1275	1.05	1513	1210	0.84	-	-	-
1.2	-	-	-	2090	1410	1.52	1867	1340	1.24	1648	1275	1.00	-	-	-	-	-	-
1.3	2219	1475	1.76	2012	1410	1.47	1779	1340	1.19	1549	1275	0.96	-	-	-	-	-	-
1.4	2144	1475	1.71	1930	1410	1.42	1687	1340	1.14	-	-	-	-	-	-	-	-	-
1.5	2067	1475	1.65	1844	1410	1.37	1589	1340	1.08	-	-	-	-	-	-	-	-	-
1.6	1986	1475	1.60	1754	1410	1.31	-	-	-	-	-	-	-	-	-	-	-	-
1.7	1902	1475	1.54	1658	1410	1.26	-	-	-	-	-	-	-	-	-	-	-	-
1.8	1813	1475	1.48	1556	1410	1.20	-	-	-	-	-	-	-	-	-	-	-	-

[1] To operate below 0.6" H_2O external static pressure, motor and blower sheave must be changed to VL34 and AK59 respectively, or equivalents.

Electrical Data

Model Number	Electrical Rating	Compressor			Outdoor Fan Motor			Indoor Fan Motor			Optional Powered Convenience Outlet	Optional Power Exhaust	Power Supply	
		QTY	RLA	LRA	QTY	HP	FLA	Type	HP	FLA	FLA	FLA	MCA	MOP
DBG0363B	208/230/3/60	1	10.45	73	1	0.17	0.95	Belt Drive Standard Static	1	3.4	-	-	17.4/17.4	25/25
											9.6/8.7	-	27.0/26.1	35/35
											-	1.7/1.5	19.1/18.9	25/25
											9.6/8.7	1.7/1.5	28.7/27.6	35/35
DBG0363C	208/230/3/60	1	10.45	73	1	0.17	0.95	Belt Drive High Static	1	3.4	-	-	17.4/17.4	25/25
											9.6/8.7	-	27.0/26.1	35/35
											-	1.7/1.5	19.1/18.9	25/25
											9.6/8.7	1.7/1.5	28.7/27.6	35/35
DBG0364B	460/3/60	1	5.77	38	1	0.17	0.48	Belt Drive Standard Static	1	1.7	-	-	9.39	15
											4.3	-	13.7	15
											-	0.5	9.89	15
											4.3	0.5	14.2	15
DBG0364C	460/3/60	1	5.77	38	1	0.17	0.48	Belt Drive High Static	1	1.7	-	-	9.39	15
											4.3	-	13.7	15
											-	0.5	9.89	15
											4.3	0.5	14.2	15
DBG0367B	575/3/60	1	3.78	36.5	1	0.17	0.39	Belt Drive Standard Static	1.5	2.3	-	-	7.42	15
											3.5	-	10.9	15
											-	0.6	8.02	15
											3.5	0.6	11.5	15
DBG0367C	575/3/60	1	3.78	36.5	1	0.17	0.39	Belt Drive High Static	1.5	2.3	-	-	7.42	15
											3.5	-	10.9	15
											-	0.6	8.02	15
											3.5	0.6	11.5	15
DBG0483B	208/230/3/60	1	13.14	83.1	1	0.25	1.4	Belt Drive Standard Static	1	3.4	-	-	21.2/21.2	30/30
											9.6/8.7	-	30.8/29.9	40/40
											-	1.7/1.5	22.9/22.7	30/30
											9.6/8.7	1.7/1.5	32.5/31.4	40/40
DBG0483C	208/230/3/60	1	13.14	83.1	1	0.25	1.4	Belt Drive High Static	1.5	4.8	-	-	22.6/22.6	35/35
											9.6/8.7	-	32.2/31.3	45/40
											-	1.7/1.5	24.3/24.1	35/35
											9.6/8.7	1.7/1.5	33.9/32.8	45/40
DBG0484B	460/3/60	1	6.09	41	1	0.25	0.7	Belt Drive Standard Static	1	1.7	-	-	10	15
											4.3	-	14.3	20
											-	0.5	10.5	15
											4.3	0.5	14.8	20
DBG0484C	460/3/60	1	6.09	41	1	0.25	0.7	Belt Drive High Static	1.5	2.4	-	-	10.7	15
											4.3	-	15	20
											-	0.5	11.2	15
											4.3	0.5	15.5	20
DBG0487B	575/3/60	1	4.36	33	1	0.25	0.55	Belt Drive Standard Static	1.5	2.3	-	-	8.3	15
											3.5	-	11.8	15
											-	0.6	8.9	15
											3.5	0.6	12.4	15
DBG0487C	575/3/60	1	4.36	33	1	0.25	0.55	Belt Drive High Static	1.5	2.3	-	-	8.3	15
											3.5	-	11.8	15
											-	0.6	8.9	15
											3.5	0.6	12.4	15

Electrical Data

Model Number	Electrical Rating	Compressor			Outdoor Fan Motor			Indoor Fan Motor			Optional Powered Convenience Outlet	Optional Power Exhaust	Power Supply	
		QTY	RLA	LRA	QTY	HP	FLA	Type	HP	FLA	FLA	FLA	MCA	MOP
DBG0603B	208/230/3/60	1	15.9	110	1	0.33	2	Belt Drive Standard Static	1	3.2	-	-	25.1/25.1	40/40
											9.6/8.7	-	34.7/33.8	50/45
											-	1.7/1.5	26.8/26.6	40/40
											9.6/8.7	1.7/1.5	36.4/35.3	50/45
DBG0603C	208/230/3/60	1	15.9	110	1	0.33	2	Belt Drive High Static	2	7.8	-	-	29.7/29.7	45/45
											9.6/8.7	-	39.3/38.4	50/50
											-	1.7/1.5	31.4/31.2	45/45
											9.6/8.7	1.7/1.5	41.0/39.9	50/50
DBG0604B	460/3/60	1	7.05	52	1	0.33	0.85	Belt Drive Standard Static	1	1.5	-	-	11.2	15
											4.3	-	15.5	20
											-	0.5	11.7	15
											4.3	0.5	16	20
DBG0604C	460/3/60	1	7.05	52	1	0.33	0.85	Belt Drive High Static	2	3.9	-	-	13.6	20
											4.3	-	17.9	20
											-	0.5	14.1	20
											4.3	0.5	18.4	20
DBG0607B	575/3/60	1	5.13	39.5	1	0.33	0.67	Belt Drive Standard Static	1	1.2	-	-	8.28	15
											3.5	-	11.8	15
											-	0.6	8.88	15
											3.5	0.6	12.4	15
DBG0607C	575/3/60	1	5.13	39.5	1	0.33	0.67	Belt Drive High Static	2	2.5	-	-	9.58	15
											3.5	-	13.1	15
											-	0.6	10.2	15
											3.5	0.6	13.7	15

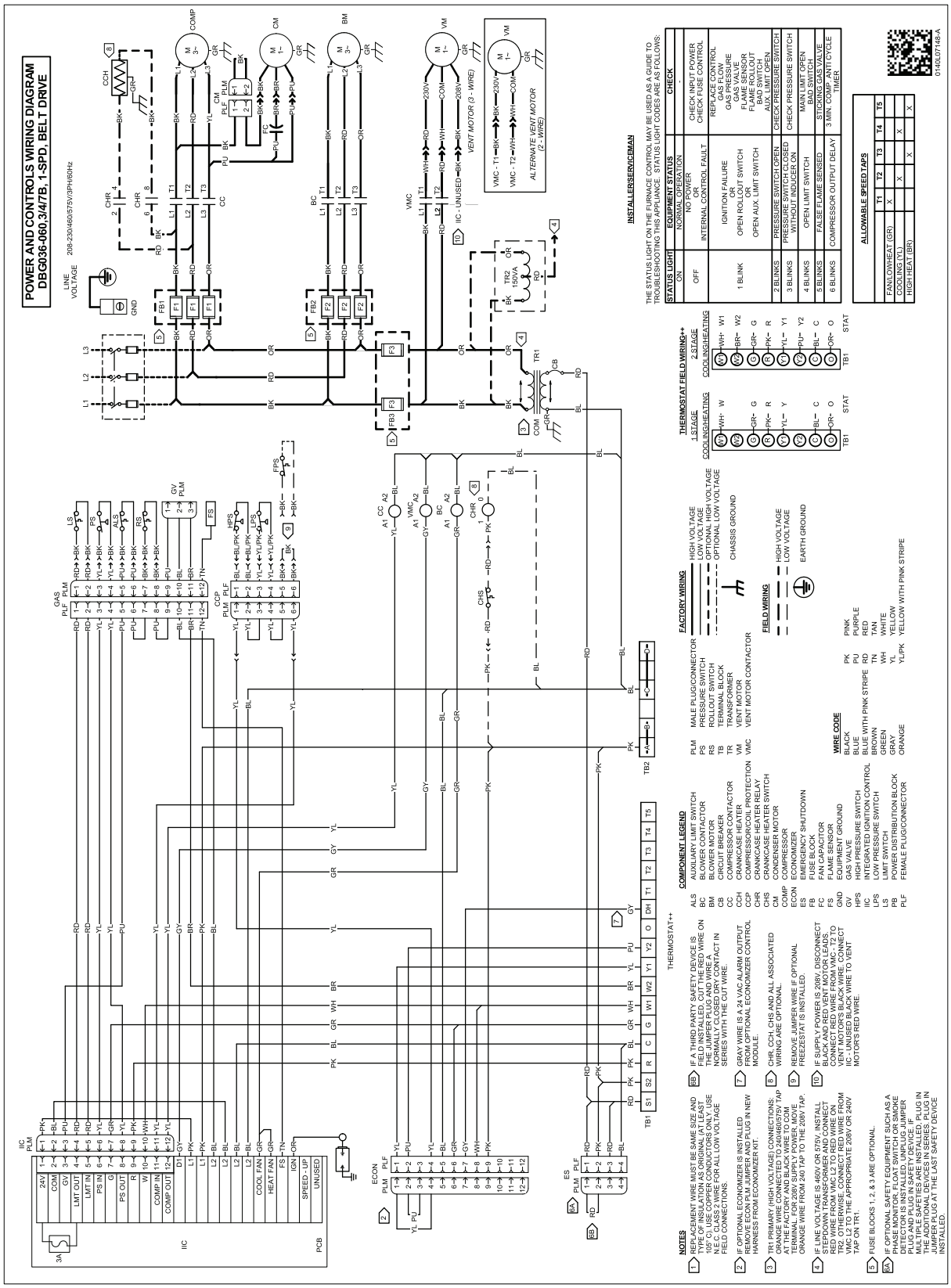

Wiring is subject to change. Always refer to the wiring diagram on the unit for the most up-to-date wiring.

WARNING

High Voltage: Disconnect all power before servicing or installing this unit. Multiple power sources may be present. Failure to do so may cause property damage, personal injury, or death.

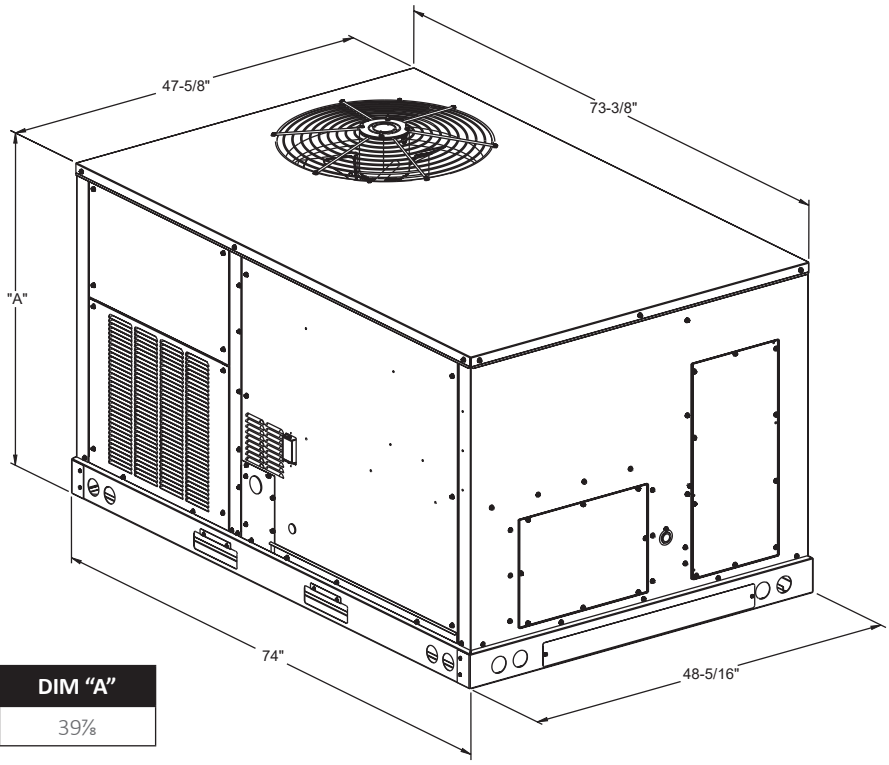

Model Size	DIM "A"
3,4 & 5	39⅞

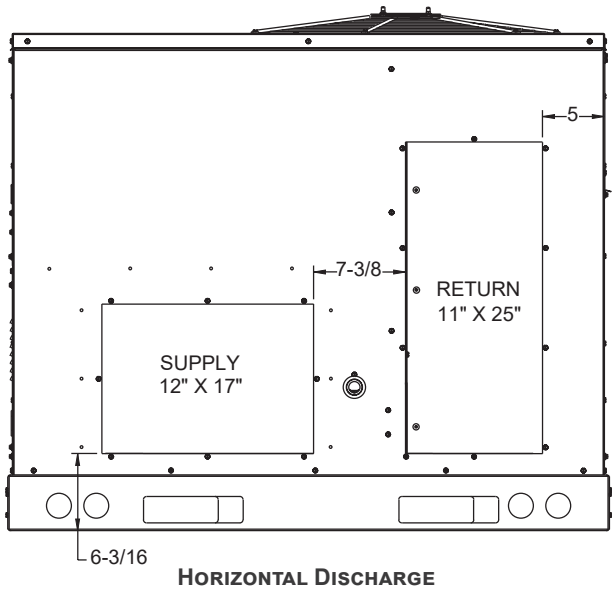

Horizontal Discharge

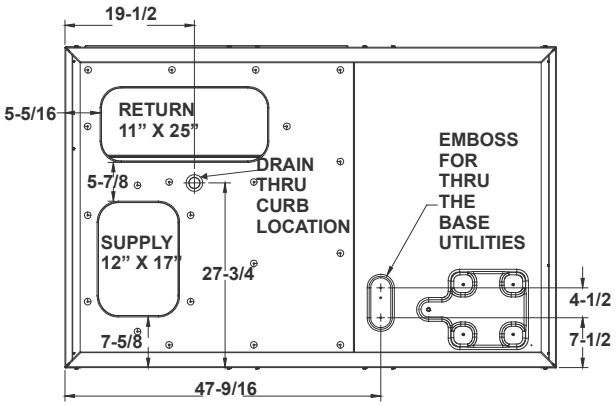

BOTTOM VIEW OF UNIT

Vertical Discharge

Electrical Connections

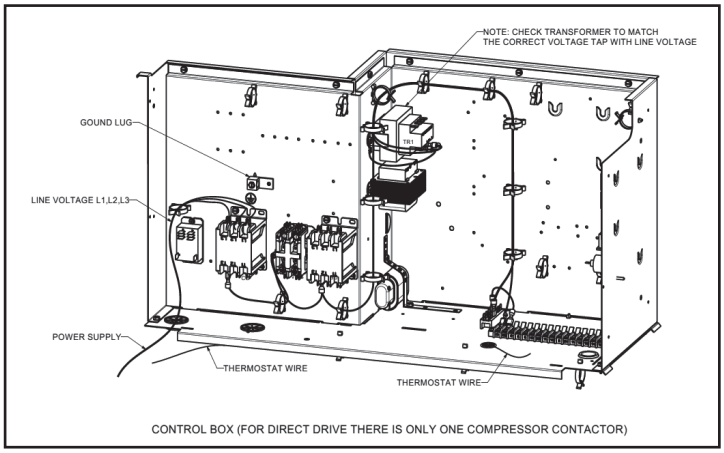

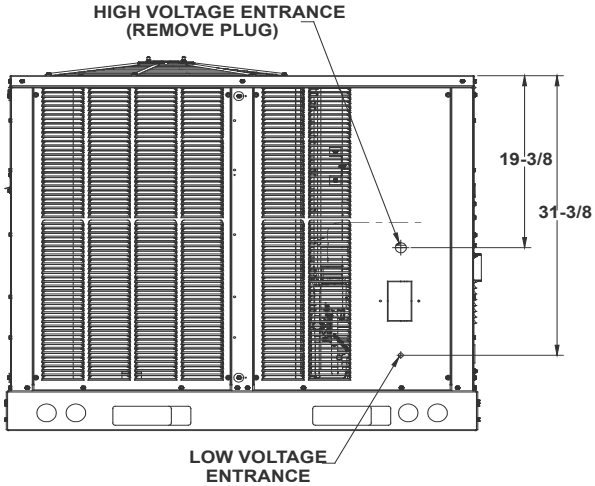

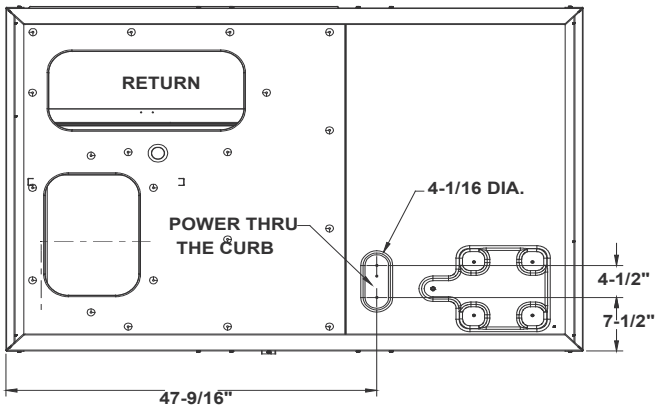

Unit Clearances

Service Clearance

Allow for recommended service clearances as shown in figure to the right. In situations that have multiple units, a 36" minimum clearance is required between the condenser coils. A clearance of 48" is recommended on all sides of the unit to allow service access and to insure proper ventilation and condenser airflow. The top of the unit should be unobstructed. Provide a roof walkway along the sides of the unit for service and access to controls and components. Contact your Daikin sales representative for service requirements less than those recommended.

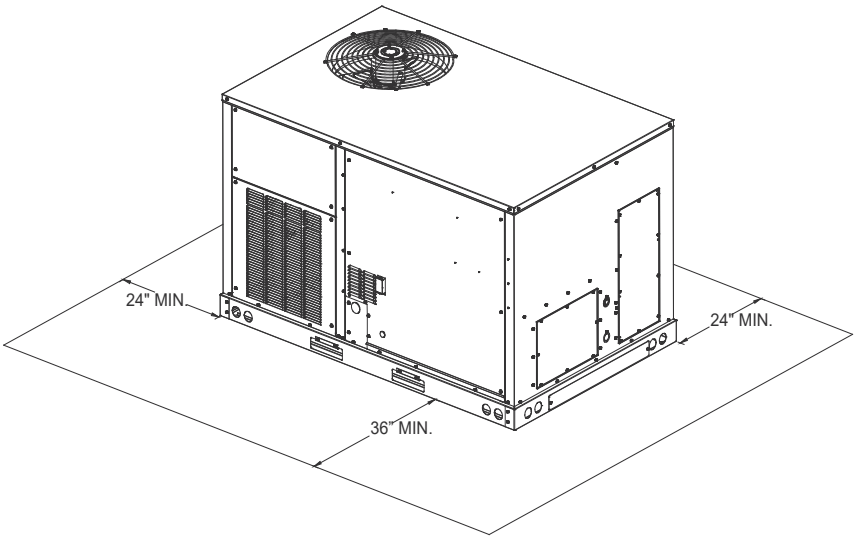

Unit Location

The structural engineer must verify that the roof has adequate support and ability to minimize deflection. Take extreme caution when using on a wooden roof structure. Unit condenser coils should be in a location that avoids any heated exhaust air.

Allow sufficient space around the unit for maintenance/service clearance. Consult your Daikin sales representative if available clearances do not meet minimum recommendations.

Where code considerations, such as the NEC, require extended clearances, these take precedence.

Provisions for forks have been included in the unit base frame. No other fork locations are approved.

» Unit must be lifted by the four lifting holes located at the base frame corners.

» Lifting cables should be attached to the unit with shackles.

» The distance between the crane hook and the top of the unit must not be less than 60".

» Two spreader bars must span over the unit to prevent damage to the cabinet by the lift cables. Spreader bars must be of sufficient length so that cables do not come in contact with the unit during transport. Remove wood struts mounted beneath unit base frame before setting unit on roof curb. These struts are intended to protect unit base frame from fork lift damage. To remove the struts, extract the sheet metal retainers and pull the struts through the base of the unit. Refer to rigging label on the unit.

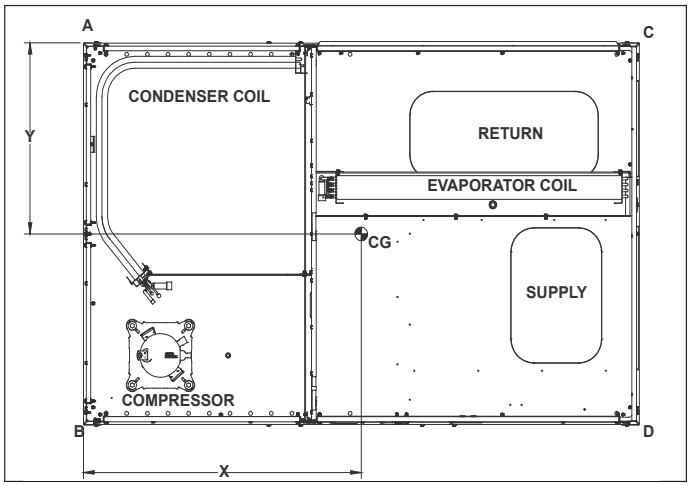

Corner & Center-of-Gravity Locations

Important: If using bottom discharge with roof curb, ductwork should be attached to the curb prior to installing the unit. Refer to the Roof Curb Installation Instructions for proper curb installation. Curbing must be installed in compliance with the National Roofing Contractors Association Manual. Lower unit carefully onto roof mounting curb. While rigging the unit, the center of gravity will cause the condenser end to be lower than the supply air end. Bring condenser end of unit into alignment with the curb. With condenser end of the unit resting on curb member and using curb as a fulcrum, lower opposite end of the unit until entire unit is seated on the curb. When a rectangular cantilever curb is used, take care to center the unit. Check for proper alignment and orientation of supply and return openings with duct.

Roof Curb Installation

The roof curb is field-assembled and must be installed level (within 1/16" per foot side to side). A sub-base must be constructed by the contractor in applications involving pitched roofs. Gaskets are furnished and must be installed between the unit and curb. For proper installation, follow NRCA guidelines. In applications requiring post and rail installation, an I-beam securely mounted on multiple posts should support the unit on each side. In addition, the insulation on the underside of the unit should be protected from the elements. Applications in geographic areas subjected to seismic or hurricane conditions must meet code requirements for fastening the unit to the curb and the curb to the building structure. For further and more detailed information please refer to our Daikin Light Commercial Packaged unit IOD.

Weights

Model	Shipping Weight (lbs)	Operating Weight (lbs)	Corner Weights (lbs)				Length	Width
			A	B	C	D	X (in)	Y (in)
DBG0363BH00001S	654	608	145	162	97	204	36½	29⅛
DBG0363BL00001S	632	586	106	189	135	156	36 7/10	28⅜
DBG0363BM00001S	645	599	133	175	117	174	35 9/10	28 1/10
DBG0483BH00001S	690	644	128	208	126	182	35⅛	29⅛
DBG0483BL00001S	677	631	112	224	128	167	34⅜	29 9/10
DBG0483BM00001S	683	637	250	88	25	274	34⅜	27⅜
DBG0603BH00001S	716	670	110	241	147	172	35 1/10	29⅝
DBG0603BL00001S	709	663	236	112	32	283	35 1/10	28 7/10
DBG0603BM00001S	709	663	236	112	32	283	35 1/10	28 7/10

Field Accessory part number	Description	Fits Model Sizes	Field-Installed	Factory-Installed	Operating Weight (lbs)
	Stainless Steel Heat Exchanger				
	45,000 BTU, 2 burners	3 ton		√	
	70,000 BTU, 3 burners	3 ton		√	
	90,000 BTU, 5 Burners	3 ton		√	
	70,000 BTU, 3 burners	4 ton		√	
	90,000 BTU, 4 burners	4 ton		√	
	115,000 BTU, 5 burners	4 ton		√	
	90,000 BTU, 4 burners	5 ton		√	
	115,000 BTU, 5 burners	5 ton		√	
	140,000 BTU, 6 burners	5 ton		√	
	Duct Smoke Detectors				
	Duct Smoke Detectors - Return	3 - 6 ton		√	11
	Duct Smoke Detectors - Supply	3 - 6 ton		√	11
	Duct Smoke Detectors - Supply and Return	3 - 6 ton		√	11
	Non-Fused Disconnect Switch				
	60 Amp Disconnect	3 - 6 ton		√	5
	100 Amp Disconnect	3 - 6 ton		√	5
	150 Amp Disconnect	3 - 6 ton		√	5
	Convenience Outlets				
	Convenience Outlets - Powered, 208/230 V	3 - 6 ton		√	42
	Convenience Outlets - Powered, 460 V	3 - 6 ton		√	42
	Convenience Outlets - Powered, 575 V	3 - 6 ton		√	42
	Convenience Outlets - Non-Powered	3 - 6 ton		√	2
	Hinged Access Panels				
	Hinged Access Panels, 39" cabinet (Gas only)	3-5 ton		√	
	Economizer				
0270L01163	Horizontal Economizer Ultra Low-Leak JADE Dry-Bulb, 39" cabinet	3-5 ton	√		88
0270L01759	Horizontal Economizer Ultra Low-Leak JADE Enthalpy Sensor, 39" cabinet	3-5 ton	√		88
0270L01753	Vertical Economizer Standard Low-Leak JADE Ethalpy Sensor	3-6 ton	√	√	65
0270L01755	Vertical Economizer Ultra Low-Leak JADE Ethalpy Sensor	3-6 ton	√	√	65
0270L01156	Vertical Economizer Standard Low-Leak JADE Dry-Bulb	3-6 ton	√	√	65
0270L01158	Vertical Economizer Ultra Low-Leak JADE Dry-Bulb	3-6 ton	√	√	65
	Curbs and Restraint Clips				
0221L00014	Roof Curb 14" Tall, Knocked Down	3-6 ton	√		80
0221L00015	Roof Curb 24" Tall, Knocked Down	3-6 ton	√		109
0270L01261	Hold Down Bracket Kit	3-6 ton	√		8
0270L01250	Hold Down Bracket Kit for Daikin Roofcurb	3-6 ton	√		8
0221L00019	Roof Curb 14" Tall Seismic with Hold Down Brackets, Knocked Down	3-6 ton	√		102
0221L00020	Roof Curb 14" Tall Wind-Rated Hurricane with Hold Down Brackets, Welded	3-6 ton	√		140
	Concentrics				
0270L01602	Concentric Diffuser 24 x 48 with 16" dia collars	3-6 ton	√		32
0270L01603	Concentric Diffuser 24 x 48 with 18" dia collars	3-6 ton	√		35
0270L01335	Concentric Duct Adaptor Kit for 16" Dia. Duct	3-6 ton	√		28
0270L01338	Concentric Duct Adaptor Kit for 18" Dia. Duct	3-6 ton	√		28
	Damper				
0270L01165	2 Position Motorized Damper	3-6 ton	√		40
0270L01166	Manual Outdoor Air Damper	3-6 ton	√		24

Accessories

Field Accessory part number	Description	Fits Model Sizes	Field-Installed	Factory-Installed	Operating Weight (lbs)
	Flue Extensions (Gas Only)				
HEFLUE036	Flue Extension, 39" cabinet (Gas only)	3-5 ton	√		6
	Hail Guard Kits				
HAILGD036HE	Condenser Coil Hail Guards, 39" cabinet	3-5 ton	√	√	
	Crankcase Heater Kits				
HECH36230	Crankcase heater Kit 208/230 V	3 ton	√	√	1
HECH4860230	Crankcase heater Kit 208/230 V	4-6 Ton	√	√	1
HECH36460	Crankcase heater Kit 460 V	3 ton	√	√	1
HECH4860460	Crankcase heater Kit 460 V	4-6 Ton	√	√	1
HECH36575	Crankcase heater Kit 575 V	3 ton	√	√	1
HECH4860575	Crankcase heater Kit 575 V	4-6 Ton	√	√	1
	High Efficiency Filters				
0160L00271	High Efficiency MERV 8 Air Filter Kit - 20x25x2 (qty 2)	3-5 ton	√		4
0160L00202	High Efficiency MERV 13 Air Filter Kit - 20x25x2 (qty 2)	3-5 ton	√		4
	Misc Accessories				
LPHE-036072	Propane Conversion Kit (Gas only)	3-6 ton	√		1
HAKT036150	High Altitude Kit (Gas only)	3-6 ton	√		1
TTBCKHE01	Through the Base Gas/Electrical	3-6 ton	√	√	1
3PMKP3	Phase Monitor Kit	3-6 ton	√	√	2
0270L01232	Burglar bars Inserts	3-6 ton	√		18
	Power Exhaust				
0270L01167	Power exhaust prop verticl ecnmzr, 230 v	3-6 ton	√		57
0270L01170	Power exhaust prop horizntl ecnmzr, 230 v	3-6 ton	√		47
0270L01171	Power exhaust prop verticl ecnmzr, 460 v	3-6 ton	√		57
0270L01168	Power exhaust prop horizntl ecnmzr, 460 v	3-6 ton	√		47
	Controls, Thermostats and Sensors				
DT4272C	Comm Touch Digital Stat w/ WiFi 4h/2c	3-6 ton	√		1
DT4273C	Comm Touch Digital Stat w/ WiFi & Humidity Control 4h/2cc	3-6 ton	√		1
TSTATGAC-WS	Remote indoor sensor	3-6 ton	√		1
250803400	AppStat RTU 2H/2C Econ	3-6 ton	√		1
250803600	AppStat HPU 3H/2C Econ (HP only)	3-6 ton	√		1
D4271C	4h/2c Commercial 7day Programmable Wi-Fi Capable thermostat	3-6 ton	√		1
D4272C	4h/2c Commercial 7day Programmable Wi-Fi Capable Hum/dehum thermostat	3-6 ton	√		1
C7232A1024	CO_2 Sensor (Wall Mtd)	3-6 ton	√		1
C7232B1022	CO_2 Sensor (Duct Mtd)	3-6 ton	√		1

Note: Where multiple variations are available, the heaviest combination is listed.

Factory Installed Options

» **Non-Powered Convenience Outlet:** A 120V, 15A, GFCI outlet can be installed in the unit making it easier for technicians to service other units once an electrician runs power to the outlet. Outlet shall be factory-installed and internally mounted with easily accessible 120-v female receptacle. Transformer not included for this option. Outlet shall include a field-installed "While-in-Use" cover.

» **High-Static Kit:** Allows for operation in higher static applications.

» **Powered Convenience Outlet:** A 120V, 15A, GFCI outlet can be powered with a step-transformer built into the unit. For use when the unit is not running. When a factory-installed powered convenience outlet is installed in the equipment, the unit MCA (Min. Circuit Ampacity) will increase by 7.5A for 208/230V units; increase by 3.75A for 460V units; and by 3A for 575V units. The MOP (Max. Overcurrent Protection) device must be sized accordingly. Outlet shall be powered from main line power to the rooftop unit. Outlet shall include a field-installed "While-in-Use" cover.

» **Stainless-Steel Heat Exchanger (Gas/Electric units only):** A tubular heat exchanger made of 409-type stainless steel can be installed in the unit.

» **Return Air and/or Supply Air Smoke Detectors:** Return air and/or supply air smoke detectors can be installed in the unit. To safely identify the presence of smoke inside the air conditioning system and shutdown the blower to prevent the smoke to disperse into different zones.

» **Disconnect Switch (non-fused):** A disconnect switch can be installed in the unit with factory wiring complete from the switch to the unit. Please note that for air conditioner and heat pump units, the appropriate electric heat kit must be ordered along with the disconnect switch (non-fused) to be factory-installed. For models with a powered convenience outlet option and a disconnect switch (non-fused) option, the power to the powered convenience outlet will be shut off when the disconnect switch (non-fused) is in the off position. National Electric Code (NEC) and UL approved non-fused switch shall provide unit power shutoff. The switch shall be accessible from outside of the unit and provide local shutdown and lockout capability.

» **Hinged Access Panels:** Allows access to unit's major components. Combined with latches for easy access to control box, compressor, filters and blower motor.

» **Through-the-base electrical connection:** Allows an easier and faster field installation through the unit basepan.

» **Through-the-base gas utility connection:** Allows an easier and faster field installation through the unit basepan.

» **Electromechanical Controls:** Basic controls that include terminal block for unit connectivity to T-Stat.

Field Installed Options

» **Manual Fresh Air Damper:** Manual damper package shall consist of damper, air inlet screen, and rain hood which can be preset to admit up to 25% outdoor air for year round ventilation.

» **Motorized Fresh Air Damper:** A two-position damper with rain hood and screen provides up to 50% outside air when the indoor fan starts and closes when the indoor fan shuts down. Consist of actuator, damper, air inlet screen, and rain hood. Damper shall close upon indoor (evaporator) fan shutoff and/or loss of power. The damper actuator shall plug into the rooftop unit's wiring harness plug. No hard wiring shall be required.

» **Power Exhaust:** Power exhaust shall be used in conjunction with an integrated economizer. This accessory exhausts return air and may be used in either downflow or horizontal (duct-mounted) applications. Horizontal power exhaust shall be mounted in return ductwork. Power exhaust shall be controlled by economizer controller operation. Exhaust fans shall be energized when dampers open past the 0-100% adjustable setpoint on the economizer control.

» **Horizontal Economizer:** Fully modulating between 0 and 100%, contain seals that meet ASHRAE 90.1 requirements. Includes motor and dampers, minimum position settings, preset linkage, wiring harness with plug, mixed air temperature sensor, and enthalpy control. An optional duct-mounted barometric relief damper is available. An optional return enthalpy sensor is available to provide comparative or differential enthalpy control. Damper blades shall be galvanized steel with composite gears. Plastic or composite blades on intake or return shall not be acceptable. Standard leak rate shall be equipped with dampers not to exceed 2% leakage at 1 in. wg pressure differential. Ultra Low Leak design meets California Title 24 section 140.4 and ASHRAE90.1 requirements for 4 cfm per sq.ft. on the outside air dampers and 10 cfm per sq. ft. on the return dampers. Shall be designed to close damper(s) during loss-of-power situations with spring return built into motor. Economizer controller shall accept a 2-10 Vdc $C0_2$ sensor input for IAQ/DCV control. In this mode, dampers shall modulate the outdoor air damper to provide ventilation based on the sensor input.

» Economizer controller shall be Honeywell JADE W7220 that provides:

- 2-line LCD interface screen for setup, configuration and troubleshooting.
- On-board Fault Detection and Diagnostics (FDD) that senses and alerts when the economizer is not operating properly, per California Title 24.
- Sensor failure loss of communication identification
- Automatic sensor detection
- Capabilities for use with multiple-speed indoor fan systems
- Utilize digital sensors: Dry bulb and Enthalpy
- Economizer controller shall provide indications when in free cooling mode, in the DCV mode, or the exhaust fan contact is closed.

- **High Altitude Kit (Gas/Electric units):** Can be used in gas/electric units operating at higher altitudes.
- **Barometric relief (only when economizer is installed):** Allows air pressure relief inside the building to maintain a constant interior pressure.
- **LP Conversion Kit (Gas/Electric units):** Allows gas/electric package units to use propane fuel.
- **Roof curbs:** Full perimeter roof curb with exhaust capability providing separate air streams for energy recovery from the exhaust air without supply air contamination. Two different heights 14" and 24", allows proper installation and structure stability. Formed galvanized steel with wood nailer strip and shall be capable of supporting entire unit weight.
- **Concentric duct kits:** Designed to provide a single point air distribution system with the added benefit of having directional air control.
- **Restraint mounting clips***:* Allows for installation reinforcement for Hurricane and/or seismic events.
- **$C0_2$ sensor:** Sensor designed to alarm the system when the $C0_2$ levels are outside safe parameters.
- **Flue extension (Gas/Electric units):** Allows the exhaust gas produced by the heat exchanger to be redirected.
- **Burglar Bar Sleeves**: Designed to prevent the access thru the return or supply ducting inside the unit.
- **Downflow square to round adapter 18":** Installed into a recessed portion of the roof curb, the concentric duct adaptor changes the orientation of the ductwork from square to round for applications utilizing that type of ducting system.
- **Side discharge concentric diffuser system:** The Concentric diffuser system is an all in one supply and return duct free arrangement for RTU systems. This system comes with two separate duct connections, one for a supply and another for a return.
- **Remote indoor sensor:** Remote sensor to monitor the temperature on zones away from the main thermostat.
- **Drain pan overflow switch:** Allows the controls to detect and send an alarm when there is an overflow on the drain pan.
- **Freeze stat:** Temperature sensing device that monitors the heat exchange to prevent the coil from freezing.

Factory and Field Installed Options

- **Downflow Economizer:** Fully modulating between 0 and 100%, contain seals that meet ASHRAE 90.1 requirements. Includes motor and dampers, minimum position settings, a preset linkage, a wiring harness with plug, a mixed air temperature sensor, enthalpy control, and a barometric relief damper. An optional return enthalpy sensor is available to provide comparative or differential enthalpy control. Damper blades shall be galvanized steel with composite gears. Plastic or composite blades on intake or return shall not be acceptable. Standard leak rate shall be equipped with dampers not to exceed 2% leakage at 1 in. wg pressure differential. Ultra Low Leak design meets California Title 24 section 140.4 and ASHRAE90.1 requirements for 4 cfm per sq.ft. on the outside air dampers and 10 cfm per sq. ft. on the return dampers. Shall be designed to close damper(s) during loss-of-power situations with spring return built into motor. Economizer controller shall accept a 2-10 Vdc $C0_2$ sensor input for IAQ/DCV control. In this mode, dampers shall modulate the outdoor air damper to provide ventilation based on the sensor input.Economizer controller shall be Honeywell W7220 that provides:
- Economizer controller shall be Honeywell W7220 that provides:
  - 2-line LCD interface screen for setup, configuration and troubleshooting.
  - On-board Fault Detection and Diagnostics (FDD) that senses and alerts when the economizer is not operating properly, per California Title 24.
  - Sensor failure loss of communication identification
  - Automatic sensor detection
  - Capabilities for use with multiple-speed indoor fan systems
  - Utilize digital sensors: Dry bulb and Enthalpy
  - Economizer controller shall provide indications when in free cooling mode, in the DCV mode, or the exhaust fan contact is closed.
- **Low Ambient Control:** Allows cooling operation down to 35°F outdoor ambient temperature for 3 - 6 ton units.
- **Phase Monitor:** Phase monitor (3 phase only) shall provide protection for motors and compressors against problems caused by phase loss, phase reversal and phase unbalance. Phase monitor is equipped with an LED that provides an ON or FAULT indicator.
- **Condenser Hail Guards:** Louvered metal guards help protect the condenser coil from hail and debris; available as a field-installed options on 3 – 12½ ton units.

Notes

Notes

Notes

Our continuing commitment to quality products may mean a change in specifications without notice.
© 2020 **DAIKIN MANUFACTURING COMPANY, L.P.** • Houston, Texas • Printed in the USA.