Goodman
Air Conditioning & Heating

CPG Commercial

7½- to 12½-Ton
Self-Contained Packaged
Gas/Electric Units
Up to 11.5 EER / 80% AFUE

Cooling Capacity: 88,000 — 140,000 BTU/h
Heating Capacity (Output): 168,000 BTU/h

Standard Features

- R-410A chlorine-free refrigerant
- TuffTube™ tubular heat exchanger
- High-efficiency scroll compressors
- Two-stage heating / two-stage cooling
- Copper tube / aluminum fin coils
- Contactor with lugs
- High-capacity, steel-cased filter drier
- Single-point entry
- 24-volt terminal strip
- Convertible
- Easy to service
- Built-in filter rack with standard 2” filters
- Complies with California Low NOx emissions standards
- AHRI Certified; ETL Listed

Cabinet Features

- Heavy-gauge, galvanized-steel cabinet with UV-resistant powder-paint finish
- Full Perimeter Rail
- Curb Fit

Contents

Nomenclature 2
Product Specifications 3
Expanded Cooling Data 8
Airflow Data 16
Dimensions 20
Wiring Diagrams 24
Accessories 28

20 YEAR HEAT EXCHANGER LIMITED WARRANTY* | 10 YEAR PARTS LIMITED WARRANTY* | R-410A REFRIGERANT

* Complete warranty details available from your local dealer or at www.goodmanmfg.com.

NOMENCLATURE

C	P	C	090	210	3	B	*	*	*	A	*
1	2	3	4,5,6	7,8,9	10	11	12	13	14	15	16

Revision Levels
Major & Minor

Brand
- C Commercial

Configuration
- P Packaged Unit

Application
- C Cooling
- G Gas Heat
- H Heat Pump

Nominal Gross Cooling Capacity

036	3 Tons	102	8½ Tons
048	4 Tons	120	10 Tons
060	5 Tons	150	12½ tons
072	6 Tons	180 & 181	15 Tons
090	7½ Tons	240	20 Tons

Nominal Heating Capacity

CPG		CPC/CPH (Factory-Installed Electric Heat)		
045	45,000 BTU/h	XXX	No Heat	
090	90,000 BTU/h	010	10 kW	030 30 kW
115	115,000 BTU/h	015	15 kW	031 30 kW
140	140,000 BTU/h	016	15 kW	045 45 kW
210	210,000 BTU/h	018	18 kW	046 45 kW
350	350,000 BTU/h	020	20 kW	060 60 kW
400	400,000 BTU/h	025	25 kW	

See product specifications for heat size(s) available for each capacity.

Voltage

1	208-230/1/60	4	460/3/60
3	208-230/3/60	7	575/3/60

Supply Fan/Drive Type/Motor

B	Belt Drive	V	2-Speed Belt Drive
D	Direct Drive		

Factory-Installed Options
- X No Options
- A Downflow Economizer
- H Disconnect Switch (non-fused)
- J Downflow Economizer; Disconnect Switch (non-fused)

Note: Not all options available for all products.

Factory-Installed Options
- X No Options
- A Non-powered convenience outlet
- B Powered convenience outlet
- C Low-ambient kit
- D Return air smoke detector
- E Supply air smoke detector
- F Non-powered convenience outlet; Low-ambient kit
- G Non-powered convenience outlet; Return air smoke detector
- H Non-powered convenience outlet; Supply air smoke detector
- J Non-powered convenience outlet; Return & Supply air smoke detectors
- K Non-powered convenience outlet; Low-ambient kit; Supply air smoke detector
- L Non-powered convenience outlet; Low-ambient kit Return & Supply air smoke detectors
- M Powered convenience outlet; Low-ambient kit
- N Powered convenience outlet; Return air smoke detector
- O Powered convenience outlet; Return & Supply air smoke detectors
- P Powered convenience outlet; Supply air smoke detector
- Q Powered convenience outlet; Low-ambient kit; Return air smoke detector
- R Powered convenience outlet; Low-ambient kit; Supply air smoke detector
- T Powered convenience outlet; Low-ambient kit; Return & Supply air smoke detectors
- U Non-powered convenience outlet; Low-ambient kit; Return air smoke detector
- V Low-ambient kit; Return air smoke detector
- W Low-ambient kit; Supply air smoke detector
- Y Low-ambient kit; Return & Supply air smoke detectors
- Z Return & Supply air smoke detectors

Factory-Installed Options
- X Standard Aluminized Heat Exchanger
- S Stainless-Steel Heat Exchanger

Factory-Installed Options
- Stainless-Steel Heat Exchanger (CPG units only): A tubular heat exchanger made of 409-type stainless steel is installed in the unit.
- Low-Ambient Kit: Allows for cooling operation at lower outdoor temperatures. On the 3- to 6-ton units, cooling operation is extended from 60°F ambient temperature to 35°F outside air temperature. On 7½- to 20-ton units, cooling operation is extended from 35°F ambient temperature to 0°F outside air temperature.
- Economizers (Downflow): Based on air conditions, can provide outside air to cool the space.
- Electric Heat Kits (CPC and CPH units only): Available in all voltage options.
- Non-powered Convenience Outlet: A 120V, 15A, GFCI outlet makes it easier for technicians to service the unit once an electrician runs power to the outlet.
- Powered Convenience Outlet: A 120V, 15A, GFCI outlet powered with a transformer built into the unit; for use when unit is not running. When a factory-installed powered convenience outlet is installed in the equipment, the unit MCA (Min. Circuit Ampacity) will increase by 7.5A for 208/230V units, increase by 3.75A for 460V units, and increase by 3A for 575V units. The MOP (Max. Overcurrent Protection) device must be sized accordingly.
- Disconnect Switch (non-fused): A disconnect switch is installed in the unit and factory wiring will be complete from the switch to the unit. Please note that for air conditioning (CPC units) and heat pump models (CPH units), the appropriate electric heat kit must be ordered to be factory-installed along with the disconnect switch (non-fused) when it is ordered. Please note that for models with a powered convenience outlet option and a disconnect switch (non-fused) option, the power to the powered convenience outlet will be shut off when the disconnect switch (non-fused) is in the off position.
- Return Air and/or Supply Air Smoke Detectors: Return air and/or supply air smoke detectors are installed in the unit.
- Two-speed Indoor Fan Blower Option: Available on 10-ton units. When the unit operates on the first stage of cooling, the fan operates at low speed to provide 2/3 CFM airflow. When both stages of cooling operate, the blower delivers the total CFM airflow. In heating operation, the fan delivers the total CFM.

Product Specifications — 7½ Tons

	CPG090 2103B***B*	CPG090 2103B*** C*	CPG090 2104B***B*	CPG090 2104B*** C*	CPG090 2107B***B*	CPG090 2107B*** C*
Cooling Capacity						
Total BTU/h	90,000	88,000	90,000	88,000	90,000	88,000
Sensible BTU/h	64,000	65,100	64,000	65,100	64,000	65,100
EER / IEER	11.5 / 11.5	11.3 / 11.5	11.5 / 11.5	11.3 / 11.5	11.5 / 11.5	11.3 / 11.5
Decibels	82.0	82.0	82.0	82.0	82.0	82.0
AHRI Reference #s	5104779	5589860	5104779	5589860	5104779	5589860
Heating Capacity						
High Input / Output BTU/h	210,000/168,000	210,000/168,000	210,000/168,000	210,000/168,000	210,000/168,000	210,000/168,000
Low Input / Output BTU/h	157,500/126,000	157,500/126,000	157,500/126,000	157,500/126,000	157,500/126,000	157,500/126,000
Steady-State Efficiency (AFUE)	80	80	80	80	80	80
Temperature Rise Range (°F)	35	35	35	35	35	35
No. of Burners	6	6	6	6	6	6
Evaporator Motor / Coil						
Motor Type	Belt Drive	Belt Drive	Belt Drive	Belt Drive	Belt Drive	Belt Drive
Indoor Nominal CFM	3,000	3,000	3,000	3,000	3,000	3,000
FLA (Cooling)	5.0	5.0	2.5	2.5	2.3	2.3
Horsepower / RPM	1½ / 1745	1½ / 1745	1½ / 1745	1½ / 1745	1½ / 1725	1½ / 1725
Piston Size (Cooling)	0.078	0.078	0.078	0.078	0.078	0.078
Filter Size (Qty)	16" x 20" x 2"	16" x 20" x 2"	16" x 20" x 2"	16" x 20" x 2"	16" x 20" x 2"	16" x 20" x 2"
Drain Size (NPT)	¾"	¾"	¾"	¾"	¾"	¾"
R-410A Refrigerant Charge: Cir #1 / #2 (oz.)	175 oz.	100 oz.	175 oz.	100 oz.	175 oz.	100 oz.
Evaporator Coil Face Area (ft^2)	8.9	8.9	8.9	8.9	8.9	8.9
Rows Deep / Fins per Inch	4 / 16	4 / 16	4 / 16	4 / 16	4 / 16	4 / 16
Belt Drive Evap Fan Data						
# of Wheels (D x W)	1 (15" x 12")	1 (15" x 12")	1 (15" x 12")	1 (15" x 12")	1 (15" x 12")	1 (15" x 12")
Motor / Blower Sheave	VL40 / AK74	VL40 / AK74	VL40 / AK74	VL40 / AK74	VL40 / AK74	VL40 / AK74
Belt	AX51	AX51	AX51	AX51	AX51	AX51
Condenser Fan / Coil						
Quantity of Condenser Fan Motors	2	2	2	2	2	2
Horsepower - RPM	¼ - 1075	¼ - 1075	¼ - 890	¼ - 890	¼ - 1075	¼ - 1075
Fan Diameter / # Fan Blades	22 / 4	22 / 4	22 / 4	22 / 4	22 / 4	22 / 4
Outdoor Nominal CFM	7,200	7,200	7,200	7,200	7,200	7,200
Face Area (ft^2)	26.5	28.8	26.5	28.8	26.5	28.8
Rows Deep / Fins per Inch	2 / 22	2 X2 / 27±1	2 / 22	'2 X2 / 27±1	2 / 22	'2 X2 / 27±1
Compressor						
Quantity / Type / Stage	2 / Scroll / 1	2 / Scroll / 1	2 / Scroll / 1	2 / Scroll / 1	2 / Scroll / 1	2 / Scroll / 1
Compressor RLA / LRA	13.1 / 83.1	13.1 / 83.1	6.1 / 41.0	6.1 / 41.0	4.4 / 33.0	4.4 / 33.0
Electrical Data						
Voltage / Phase / Frequency	208-230 / 3 / 60	208-230 / 3 / 60	460 / 3 / 60	460 / 3 / 60	575 / 3 / 60	575 / 3 / 60
Indoor Blower HP / FLA	1.5 / 5.0	1.5 / 5.0	1.5 / 2.5	1.5 / 2.5	1.5 / 2.3	1.5 / 2.3
Max External Static	1.5"	1.5"	1.5"	1.5"	1.5"	1.5"
Outdoor Fan HP / RLA	¼ / 1.4	¼ / 1.4	¼ / 0.8	¼ / 0.8	¼ / 0.6	¼ / 0.6
Total Unit Amps	34.0	34.0	16.3	16.3	12.3	12.3
Min. Circuit Ampacity[1]	37	37	18	18	13	13
Max. Overcurrent Protection (amps)[2]	50	50	20	20	15	15
Entrance Power Supply & Control Voltage	Locating Dimple	Locating Dimple	Locating Dimple	Locating Dimple	Locating Dimple	Locating Dimple
Operating / Ship Weights (lbs)	1030 / 1055	1100 / 1175	1030 / 1055	1100 / 1175	1030 / 1055	1100 / 1175

[1] Wire size should be determined in accordance with National Electrical Codes. Extensive wire runs will require larger wire sizes.
[2] May use fuses or HACR-type circuit breakers of the same size as noted.

Notes

- Always check the S&R plate for electrical data on the unit being installed.
- When a factory-installed powered convenience outlet is installed in the equipment, the unit MCA (Min. Circuit Ampacity) will increase by 7.5A for 208/230V units, increase by 3.75A for 460V units, and by 3A for 575V units. The MOP (Max. Overcurrent Protection) device must be sized accordingly.

Product Specifications — 8½ Tons

	CPG102 2103B***A*	CPG102 2104B***A*	CPG102 2107B***A*
Cooling Capacity			
Total, BTU/h	102,000	102,000	102,000
Sensible BTU/h	70,380	70,380	70,380
EER / IEER	11.3 / 11.2	11.3 / 11.2	11.3 / 11.2
Decibels	83	83	83
ARI Reference #s	5104775	5104775	5104775
Heating Capacity			
High Input / Output BTU/h	210,000 / 168,000	210,000 / 168,000	210,000 / 168,000
Low Input / Output BTU/h	157,500/126,000	157,500/126,000	157,500/126,000
Steady State Efficciency	80	80	80
Temperature Rise Range (°F)	35 - 65	35 - 65	35 - 65
No. of Burners	6	6	6
Evapoartor Motor / Coil			
Motor Type	Belt Drive	Belt Drive	Belt Drive
Indoor Nominal CFM	3,200	3,200	3,200
Indoor Motor FLA (Cooling)	7.8	3.9	2.3
Horsepower - RPM	1725	1725	1725
Piston Size (Cooling)	0.08	0.08	0.08
Filter Size (Qty)	(4) 16” x 20” x 2”	(4) 16” x 20” x 2”	(4) 16” x 20” x 2”
Drain Size (NPT)	3/4”	3/4”	3/4”
R-410A Refrigerant Charge Cir #1 #2 (oz.)	180	180	180
Evaporator Coil Face Area (ft2)	8.9	8.9	8.9
Rows Deep / Fins per Inch	4 / 16	4 / 16	4 / 16
Belt Drive Evap Fan Data			
# of Wheels (D x W)	1 (15” x 12”)	1 (15” x 12”)	1 (15” x 12”)
Motor Sheave / Blower Sheave	VL40 / AK74	VL40 / AK74	VL40 / AK74
Belt	AX51	AX51	AX51
Condenser Fan / Coil			
Quantity of Condenser Fan Motors	2	2	2
Horsepower - RPM	1/4” - 1090	1/4” - 890	1/4” - 1075
Fan Diameter / # Fan Blades	22 / 4	22 / 4	22 / 4
Outdoor Nominal CFM	7,200	7,200	7,200
Face Area (ft^2)	13.25	13.25	13.25
Rows Deep / Fins per Inch	2 / 22	2 / 22	2 / 22
Compressor			
Quantity / Type / Stage	2 / Scroll / 1	2 / Scroll / 1	2 / Scroll / 1
Compressor RLA / LRA ea.	14.5 / 98	6.3 / 55	6.0 / 41
Electrical Data / Static			
Voltage / Phase / Frequency	230 / 3 / 60	460 / 3 / 60	575 / 3 / 60
Standard Max Static	1”	1	1
Outdoor Fan FLA ea.	1.4	0.8	0.6
Total Unit Amps	39.6	18.1	15.5
Min. Circuit Ampacity[1]	43.2	19.7	17
Max. Overcurrent Protection (amps)[2]	50	25	20
Entrance Power Supply	Locating	Locating	Locating
Entrance Control Voltage	Dimple	Dimple	Dimple
Operating/Shipping Weight (lbs)	1030/ 1055	1030/ 1055	1030/ 1055

[1] Wire size should be determined in accordance with National Electrical Codes. Extensive wire runs will require larger wire sizes.
[2] May use fuses or HACR-type circuit breakers of the same size as noted.

Notes

- Always check the S&R plate for electrical data on the unit being installed.
- When a factory-installed powered convenience outlet is installed in the equipment, the unit MCA (Min. Circuit Ampacity) will increase by 7.5A for 208/230V units, increase by 3.75A for 460V units, and by 3A for 575V units. The MOP (Max. Overcurrent Protection) device must be sized accordingly.

Product Specifications — 10 Tons

	CPG120 2103B***A*	CPG120 2103B***B*	CPG120 2103V***A*	CPG120 2104B***A*	CPG120 2104B***B*
Cooling Capacity					
Total BTU/h	118,000	116,000	116,000	118,000	116,000
Sensible BTU/h	87,300	84,700	84,700	87,300	84,700
EER / IEER	11.5 / 11.5	11.3 / 11.5	11.3 / 12.8	11.5 / 11.5	11.3 / 11.5
Decibels	83	83	83	83	83
ARI Reference #s	5728008	5728009	5696559	5728008	5728009
Heating Capacity					
High Input/Output (BTU/h)	210,000/168,000	210,000/168,000	210,000/168,000	210,000/168,000	210,000/168,000
Low Input/Output (BTU/h)	157,500/126,000	157,500/126,000	157,500/126,000	157,500/126,000	157,500/126,000
Steady State Efficiency	80	80	80	80	80
Temperature Rise Range (°F)	25-55	25-55	25-55	25-55	25-55
No. of Burners	6	6	6	6	6
Evaporator Motor / Coil					
Motor Type	Belt Drive	Belt Drive	2-Speed Belt Drive	Belt Drive	Belt Drive
Indoor Nominal CFM	3,500	3,500	3,500	3,500	3,500
Indoor Motor FLA (Cooling)	7.8	7.8	6.4	3.9	3.9
Horsepower - RPM	2.0 - 1,725	2.0 - 1,725	2.0 - 1,725	2.0 - 1,725	2.0 - 1,725
Piston Size (Cooling)	0.086	0.086	0.086	0.086	0.086
Filter Size (#=4)	16"x24"x2"	16”x24”x2”	16”x24”x2”	16”x24”x2”	16”x24”x2”
Drain Size (NPT)	¾"	¾"	¾"	¾"	¾"
R-410A Refrigerant Charge Cir #1 & 2 (oz.)	220 / 220	125 / 125	125 / 125	220 / 220	125 / 125
Evaporator Coil Face Area (ft^2)	10.2	10.2	10.2	10.2	10.2
Rows Deep/ Fins per Inch	4 / 14	4 / 14	4 / 14	4 / 14	4 / 14
Belt Drive Evap Fan Data					
# of Wheels (D x W)	(1) 15” x 15”	(1) 15” x 15”	(1) 15” x 15”	(1) 15” x 15”	(1) 15” x 15”
Motor Sheave / Blower Sheave	VL40 / AK74	VL40 / AK74	VL40 / AK74	VL40 / AK74	VL40 / AK74
Belt	AX51	AX51	AX50	AX51	AX51
Condenser Fan / Coil					
Quantity of Condenser Fan Motors	2	2	2	2	2
Horsepower - RPM	⅓ - 1,075	⅓ - 1,075	⅓ - 1,075	⅓ - 1,075	⅓ - 1,075
Fan Diameter / # Fan Blades	22 / 3	22 / 3	22 / 3	22 / 3	22 / 3
Outdoor Nominal CFM	8,200	8,200	8,200	8,200	8,200
Face Area (ft^2)	32.4	35.2	35.2	32.4	35.2
# Coils / Rows Deep - Fins per Inch	2 / 2 - 22	2 X2 / 27±1	2 X2 / 27±1	2 / 2 - 22	'2 X2 / 27±1
Compressor					
Quantity / Type / Stage	2 / Scroll / 1	2 / Scroll / 1	2 / Scroll / 1	2 / Scroll / 1	2 / Scroll / 1
Compressor RLA / LRA ea.	16 / 110.0	16 / 110.0	16 / 110.0	7.8 / 52.0	7.8 / 52.0
Electrical Data					
Voltage/Phase/ Frequency	208-230/ 3/ 60	208-230/ 3/ 60	208-230/ 3/ 60	460/ 3/ 60	460/ 3/ 60
Belt-Driven Standard Max Static	1.4"	1.4"	1.4"	1.4"	1.4"
Outdoor Fan RLA ea.	2.40	2.40	2.40	1.20	1.20
Total Unit Amps	45	45	43	22	22
Min. Circuit Ampacity[1]	49	49	47	24	24
Max. Overcurrent Protection (amps)[2]	60	60	60	30	30
Entrance Power Supply & Control Voltage	Locating Dimple	Locating Dimple	Locating Dimple	Locating Dimple	Locating Dimple
Operating / Ship Weights (lbs)	1235 / 1275	1140 / 1215	1140 / 1215	1235 / 1275	1140 / 1215

[1] Wire size should be determined in accordance with National Electrical Codes. Extensive wire runs will require larger wire sizes.
[2] May use fuses or HACR-type circuit breakers of the same size as noted.

Notes

- Always check the S&R plate for electrical data on the unit being installed.
- When a factory-installed powered convenience outlet is installed in the equipment, the unit MCA (Min. Circuit Ampacity) will increase by 7.5A for 208/230V units, increase by 3.75A for 460V units, and by 3A for 575V units. The MOP (Max. Overcurrent Protection) device must be sized accordingly.

Product Specifications — 10 Tons (cont.)

	CPG120 2104V***A*	CPG120 2107B***A*	CPG120 2107B***B*	CPG120 2107V***A*
Cooling Capacity				
Total BTU/h	116,000	118,000	116,000	116,000
Sensible BTU/h	84,700	87,300	84,700	84,700
EER / IEER	11.3 / 12.8	11.5 / 11.5	11.3 / 11.5	11.3 / 12.8
Decibels	83	83	83	83
ARI Reference #s	5696559	5728008	5728009	5696559
Heating Capacity				
High Input/Output (BTU/h)	210,000/168,000	210,000/168,000	210,000/168,000	210,000/168,000
Low Input/Output (BTU/h)	157,500/126,000	157,500/126,000	157,500/126,000	157,500/126,000
Steady State Efficiency	80	80	80	80
Temperature Rise Range (°F)	25-55	25-55	25-55	25-55
No. of Burners	6	6	6	6
Evaporator Motor / Coil				
Motor Type	2-Speed Belt Drive	Belt Drive	Belt Drive	2-Speed Belt Drive
Indoor Nominal CFM	3,500	3,500	3,500	3,500
Indoor Motor FLA (Cooling)	3.3	2.5	2.5	2.4
Horsepower - RPM	2.0 - 1,725	2.0 - 1,725	2.0 - 1,725	2.0 - 1,725
Piston Size (Cooling)	0.086	0.086	0.086	0.086
Filter Size (Qty=4)	16”x24”x2”	16”x24”x2”	16”x24”x2”	16”x24”x2”
Drain Size (NPT)	¾"	¾"	¾"	¾"
R-410A Refrigerant Charge Cir #1 & 2 (oz.)	125 / 125	220 / 220	125 / 125	125 / 125
Evaporator Coil Face Area (ft^2)	10.2	10.2	10.2	10.2
Rows Deep/ Fins per Inch	4 / 14	4 / 14	4 / 14	4 / 14
Belt Drive Evap Fan Data				
# of Wheels (D x W)	(1) 15” x 15”	(1) 15” x 15”	(1) 15” x 15”	(1) 15” x 15”
Motor Sheave / Blower Sheave	VL40 / AK74	VL40 / AK74	VL40 / AK74	VL40 / AK74
Belt	AX50	AX51	AX51	AX50
Condenser Fan / Coil				
Quantity of Condenser Fan Motors	2	2	2	2
Horsepower - RPM	⅓ - 1,075	⅓ - 1,075	⅓ - 1,075	⅓ - 1,075
Fan Diameter / # Fan Blades	22 / 3	22 / 3	22 / 3	22 / 3
Outdoor Nominal CFM	8,200	8,200	8,200	8,200
Face Area (ft^2)	35.2	32.4	35.2	35.2
# Coils / Rows Deep - Fins per Inch	'2 X2 / 27±1	2 / 2 - 22	'2 X2 / 27±1	'2 X2 / 27±1
Compressor				
Quantity / Type / Stage	2 / Scroll / 1	2 / Scroll / 1	2 / Scroll / 1	2 / Scroll / 1
Compressor RLA / LRA ea.	7.8 / 52.0	5.7 / 38.9	5.7 / 38.9	5.7 / 38.9
Electrical Data				
Voltage/Phase/ Frequency	460/ 3/ 60	575/ 3/ 60	575/ 3/ 60	575/ 3/ 60
Belt-Driven Standard Max Static	1.4"	1.4"	1.4"	1.4"
Outdoor Fan RLA ea.	1.20	0.90	0.90	0.90
Total Unit Amps	21	16	16	16
Min. Circuit Ampacity[1]	23	17	17	17
Max. Overcurrent Protection (amps)[2]	30	20	20	20
Entrance Power Supply & Control Voltage	Locating Dimple	Locating Dimple	Locating Dimple	Locating Dimple
Operating / Ship Weights (lbs)	1140 / 1215	1235 / 1275	1140 / 1215	1140 / 1215

[1] Wire size should be determined in accordance with National Electrical Codes. Extensive wire runs will require larger wire sizes.
[2] May use fuses or HACR-type circuit breakers of the same size as noted.

Notes

- Always check the S&R plate for electrical data on the unit being installed.
- When a factory-installed powered convenience outlet is installed in the equipment, the unit MCA (Min. Circuit Ampacity) will increase by 7.5A for 208/230V units, increase by 3.75A for 460V units, and by 3A for 575V units. The MOP (Max. Overcurrent Protection) device must be sized accordingly.

Product Specifications — 12½ Tons

	CPG150 2103B***A*	CPG150 2104B***A*	CPG150 2107B***A*
Cooling Capacity			
Total, BTU/h	140,000	140,000	140,000
Sensible BTU/h	98,000	98,000	98,000
EER / IEER	10.8 / 11.0	10.8 / 11.0	10.8 / 11.0
Decibels	83	83	83
ARI Reference #s	5104777	5104777	5104777
Heating Capacity			
High Input / Output BTU/h	210,000 / 168,000	210,000 / 168,000	210,000 / 168,000
Low Input / Output BTU/h	157,500/126,000	157,500/126,000	157,500/126,000
Steady State Efficiency	80	80	80
Temperature Rise Range (°F)	15 - 45	15 - 45	15 - 45
No. of Burners	6	6	6
Evapoartor Motor / Coil			
Motor Type (Belt Drive)	AX49	AX49	AX49
Indoor Nominal CFM	4,200	4,200	4,200
Indoor Motor FLA (Cooling)	9.4	4.7	4.2
Horsepower - RPM	3.0 - 1,725	3.0 - 1,725	3.0 - 1,725
Piston Size (Cooling)	0.096	0.096	0.096
Filter Size (Qty)	(4) 20" x 25" x 2"	(4) 20" x 25" x 2"	(4) 20" x 25" x 2"
Drain Size (NPT)	¾"	¾"	¾"
R-410A Refrigerant Charge Cir #1/ #2 (oz.)	285/ 285	285/ 285	285/ 285
Evaporator Coil Face Area (ft^2)	14.7	14.7	14.7
Rows Deep / Fins per Inch	4 / 15	4 / 15	4 / 15
Belt Drive Evap Fan Data			
# of Wheels (D x W)	(1) 15” x 15”	(1) 15” x 15”	(1) 15” x 15”
Motor Sheave / Blower Sheave	VL40 / AK66	VL40 / AK66	VL40 / AK66
Belt	AX51	AX51	AX50
Condenser Fan / Coil			
Quantity of condenser Fan Motors	2	2	2
Horsepower - RPM	⅓ - 1,075	⅓ - 1,075	⅓ - 1,075
Fan Diameter / # Fan Blades	22/3	22/3	22/3
Outdoor Nominal CFM	8,400	8,400	8,400
Face Area (ft^2)	35.3	35.3	35.3
Rows Deep / Fins per Inch	2/3 rows 15 fpi	2/3 rows 15 fpi	2/3 rows 15 fpi
Compressor			
Quantity / Type / Stage	2 / Scroll / 1	2 / Scroll / 1	2 / Scroll / 1
Compressor RLA / LRA ea.	22.4 / 149	10.6 / 75	7.7 / 54
Electrical Data / Static			
Voltage / Phase / Frequency	208-230/3/60	460/3/60	575/3/60
Standard Max Static	1.4"	1.4"	1.4"
Outdoor Fan FLA ea.	2.4	1.2	0.9
Total Unit Amps	59	28	21.4
Min. Circuit Ampacity[1]	65	31	23
Max. Overcurrent Protection (amps)[2]	80	40	30
Entrance Power Supply Entrance Control Voltage	Locating Dimple	Locating Dimple	Locating Dimple
Operating / Shipping Weight (lbs)	1365 / 1390	1365 / 1390	1365 / 1390

[1] Wire size should be determined in accordance with National Electrical Codes. Extensive wire runs will require larger wire sizes.
[2] May use fuses or HACR-type circuit breakers of the same size as noted.

Notes

- Always check the S&R plate for electrical data on the unit being installed.
- When a factory-installed powered convenience outlet is installed in the equipment, the unit MCA (Min. Circuit Ampacity) will increase by 7.5A for 208/230V units, increase by 3.75A for 460V units, and by 3A for 575V units. The MOP (Max. Overcurrent Protection) device must be sized accordingly.

Expanded Cooling Data — 7½ Tons

			Outdoor Ambient Temperature																							
			65				75				85				95				105				115			
			Entering Indoor Wet Bulb Temperature																							
IDB	Airflow		59	63	67	71	59	63	67	71	59	63	67	71	59	63	67	71	59	63	67	71	59	63	67	71
70	3375	MBh	86	89	98	-	84	87	96	-	82	85	93	-	80	83	91	-	76	79	87	-	71	73	80	-
		S/T	0.74	0.62	0.43	-	0.77	0.64	0.45	-	0.79	0.66	0.46	-	0.82	0.68	0.47	-	0.85	0.71	0.49	-	0.85	0.71	0.49	-
		ΔT	17.5	15.1	11.5	-	17.7	15.3	11.6	-	17.7	15.3	11.6	-	17.8	15.4	11.7	-	17.6	15.2	11.5	-	16.4	14.2	10.8	-
		kW	6.1	6.2	6.4	-	6.6	6.7	6.9	-	6.9	7.1	7.3	-	7.3	7.4	7.7	-	7.6	7.7	8.0	-	7.8	8.0	8.2	-
		Hi PR	234	252	266	-	262	282	298	-	298	321	339	-	340	366	386	-	382	411	434	-	422	454	480	-
		Lo PR	108	115	126	-	114	122	133	-	119	126	138	-	125	133	145	-	131	139	152	-	135	144	157	-
	3000	MBh	84	87	95	-	82	85	93	-	80	83	91	-	78	81	88	-	74	77	84	-	69	71	78	-
		S/T	0.71	0.59	0.41	-	0.73	0.61	0.43	-	0.75	0.63	0.44	-	0.78	0.65	0.45	-	0.81	0.67	0.47	-	0.81	0.68	0.47	-
		ΔT	18.2	15.7	11.9	-	18.4	15.9	12.1	-	18.4	16.0	12.1	-	18.6	16.1	12.2	-	18.3	15.8	12.0	-	17.1	14.8	11.2	-
		kW	6.1	6.2	6.4	-	6.5	6.6	6.8	-	6.9	7.0	7.2	-	7.2	7.4	7.6	-	7.5	7.7	7.9	-	7.8	7.9	8.2	-
		Hi PR	231	249	263	-	260	279	295	-	295	318	336	-	336	362	382	-	378	407	430	-	418	450	475	-
		Lo PR	107	114	124	-	113	120	132	-	118	125	137	-	124	132	144	-	130	138	150	-	134	143	156	-
	2400	MBh	77	80	88	-	75	78	86	-	74	76	84	-	72	75	82	-	68	71	78	-	63	66	72	-
		S/T	0.68	0.57	0.40	-	0.71	0.59	0.41	-	0.73	0.61	0.42	-	0.75	0.63	0.43	-	0.78	0.65	0.45	-	0.78	0.66	0.45	-
		ΔT	20.2	17.5	13.3	-	20.5	17.7	13.5	-	20.5	17.7	13.5	-	20.6	17.9	13.6	-	20.4	17.6	13.4	-	19.0	16.5	12.5	-
		kW	5.9	6.1	6.2	-	6.4	6.5	6.7	-	6.7	6.9	7.1	-	7.1	7.2	7.4	-	7.3	7.5	7.7	-	7.6	7.7	8.0	-
		Hi PR	224	242	255	-	252	271	286	-	286	308	326	-	326	351	371	-	367	395	417	-	406	436	461	-
		Lo PR	104	111	121	-	110	117	128	-	114	121	133	-	120	128	139	-	126	134	146	-	130	138	151	-
75	3375	MBh	88	90	98	105	86	88	95	102	84	86	93	100	82	84	91	98	77	80	86	93	72	74	80	86
		S/T	0.84	0.76	0.57	0.4	0.88	0.78	0.59	0.4	0.90	0.80	0.61	0.4	0.93	0.83	0.63	0.4	0.96	0.86	0.65	0.4	0.97	0.87	0.66	0.4
		ΔT	20.2	18.6	15.2	10.5	20.4	18.8	15.4	10.6	20.5	18.8	15.4	10.7	20.6	19.0	15.5	10.7	20.3	18.7	15.3	10.6	19.0	17.5	14.3	9.9
		kW	6.2	6.3	6.5	6.7	6.6	6.7	6.9	7.2	7.0	7.1	7.4	7.6	7.3	7.5	7.7	8.0	7.6	7.8	8.0	8.3	7.9	8.1	8.3	8.6
		Hi PR	236	254	268	280	265	285	301	314	301	324	342	357	343	369	390	407	386	415	439	458	427	459	485	506
		Lo PR	109	116	127	135	116	123	134	143	120	128	139	149	126	134	146	156	132	141	154	163	137	145	159	169
	3000	MBh	85	88	95	102	83	86	93	99	81	84	90	97	79	**82**	88	95	75	77	84	90	70	72	78	83
		S/T	0.81	0.72	0.55	0.4	0.84	0.75	0.57	0.4	0.86	0.77	0.58	0.4	0.88	**0.79**	0.60	0.4	0.92	0.82	0.62	0.4	0.93	0.83	0.63	0.4
		ΔT	21.0	19.4	15.9	11.0	21.3	19.6	16.1	11.1	21.3	19.6	16.1	11.1	21.5	**19.8**	16.2	11.2	21.2	19.5	16.0	11.0	19.8	18.2	14.9	10.3
		kW	6.1	6.2	6.4	6.6	6.6	6.7	6.9	7.1	6.9	7.1	7.3	7.5	7.3	**7.4**	7.7	7.9	7.6	7.7	8.0	8.2	7.8	8.0	8.2	8.5
		Hi PR	234	252	266	277	262	282	298	311	298	321	339	354	340	**366**	386	403	382	411	434	453	422	454	480	501
		Lo PR	108	115	126	134	114	122	133	141	119	126	138	147	125	**133**	145	154	131	139	152	162	135	144	157	167
	2400	MBh	79	81	88	94	77	79	86	92	75	77	84	90	73	75	81	87	69	72	77	83	64	66	72	77
		S/T	0.78	0.69	0.53	0.3	0.81	0.72	0.55	0.4	0.83	0.74	0.56	0.4	0.85	0.76	0.58	0.4	0.88	0.79	0.60	0.4	0.89	0.80	0.60	0.4
		ΔT	23.4	21.5	17.6	12.2	23.7	21.8	17.9	12.3	23.7	21.8	17.9	12.3	23.9	22.0	18.0	12.4	23.5	21.7	17.8	12.3	22.0	20.2	16.6	11.5
		kW	6.0	6.1	6.3	6.5	6.4	6.5	6.7	6.9	6.8	6.9	7.1	7.4	7.1	7.3	7.5	7.7	7.4	7.5	7.8	8.0	7.6	7.8	8.0	8.3
		Hi PR	227	244	258	269	254	274	289	302	289	311	329	343	330	355	375	391	371	399	421	439	410	441	466	486
		Lo PR	105	112	122	130	111	118	129	137	115	123	134	143	121	129	141	150	127	135	147	157	131	140	153	162

IDB: Entering Indoor Dry Bulb Temperature — Shaded area reflects ACCA (TVA) Rating Conditions — Amps: Unit amps (comp.+ evaporator + condenser fan motors)

High and low pressures are measured at the liquid and suction access fittings. — Design Superheat 7±2 °F, Design Subcooling 12 ±2 °F pressures measured @ the suction and liquid service ports, AHRI 95 test conditions

Expanded Cooling Data — 7½ Tons (cont.)

			Outdoor Ambient Temperature																							
			65				75				85				95				105				115			
			Entering Indoor Wet Bulb Temperature																							
IDB	Airflow		59	63	67	71	59	63	67	71	59	63	67	71	59	63	67	71	59	63	67	71	59	63	67	71
80	3375	MBh	89	91	97	104	87	89	95	102	85	87	93	99	83	85	91	97	79	81	86	92	73	75	80	85
		S/T	0.93	0.87	0.71	0.5	0.96	0.90	0.73	0.5	1.00	0.92	0.75	0.6	1.00	0.95	0.78	0.6	1.00	1.00	0.81	0.6	1.00	1.00	0.81	0.6
		ΔT	22.5	21.6	18.8	15.0	22.8	21.9	19.0	15.2	23.2	21.9	19.0	15.2	22.6	22.0	19.2	15.3	21.5	22.0	18.9	15.1	19.9	20.3	17.6	14.1
		kW	6.2	6.3	6.5	6.7	6.7	6.8	7.0	7.2	7.1	7.2	7.4	7.6	7.4	7.6	7.8	8.0	7.7	7.9	8.1	8.4	7.9	8.1	8.4	8.6
		Hi PR	238	257	271	283	268	288	304	317	304	328	346	361	347	373	394	411	390	420	443	462	431	464	490	511
		Lo PR	110	118	128	137	117	124	136	144	121	129	141	150	127	136	148	158	134	142	155	165	138	147	160	171
	3000	MBh	87	89	95	101	85	86	92	99	83	84	90	96	81	82	**88**	94	77	78	84	89	71	72	77	83
		S/T	0.88	0.83	0.67	0.50	0.92	0.86	0.70	0.52	0.94	0.88	0.72	0.54	0.97	0.91	**0.74**	0.55	1.00	0.94	0.77	0.57	1.00	0.95	0.77	0.58
		ΔT	23.5	22.5	19.6	15.6	23.8	22.8	19.8	15.8	23.8	22.8	19.8	15.8	23.9	22.9	**20.0**	15.9	23.5	22.6	19.7	15.7	21.7	21.1	18.4	14.7
		kW	6.2	6.3	6.5	6.7	6.6	6.7	6.9	7.2	7.0	7.1	7.4	7.6	7.3	7.5	**7.7**	8.0	7.6	7.8	8.0	8.3	7.9	8.1	8.3	8.6
		Hi PR	236	254	268	280	265	285	301	314	301	324	342	357	343	369	**390**	407	386	415	439	458	427	459	485	506
		Lo PR	109	116	127	135	116	123	134	143	120	128	139	149	126	134	**147**	156	132	141	154	164	137	145	159	169
	2400	MBh	80	82	87	93	78	80	85	91	76	78	83	89	74	76	81	87	71	72	77	82	65	67	71	76.4
		S/T	0.85	0.80	0.65	0.5	0.88	0.83	0.67	0.5	0.91	0.85	0.69	0.5	0.93	0.88	0.71	0.5	0.97	0.91	0.74	0.6	0.98	0.92	0.75	0.6
		ΔT	26.1	25.0	21.8	17.4	26.4	25.3	22.0	17.6	26.5	25.4	22.0	17.6	26.6	25.5	22.2	17.7	26.3	25.2	21.9	17.5	24.5	23.5	20.4	16.3
		kW	6.0	6.1	6.3	6.5	6.5	6.6	6.8	7.0	6.8	7.0	7.2	7.4	7.2	7.3	7.5	7.8	7.5	7.6	7.8	8.1	7.7	7.9	8.1	8.4
		Hi PR	229	246	260	271	257	277	292	305	292	315	332	346	333	358	378	395	375	403	426	444	414	445	470	490
		Lo PR	106	113	123	131	112	119	130	139	116	124	135	144	122	130	142	151	128	136	149	159	133	141	154	164
85	3375	MBh	91	93	97	103	89	90	95	101	87	88	92	99	84	86	90	96	80	82	86	91	74	76	79	85
		S/T	0.97	0.94	0.85	0.7	1.00	0.97	0.88	0.7	1.00	1.00	0.90	0.7	1.00	1.00	0.93	0.8	1.00	1.00	0.96	0.8	1.00	1.00	0.97	0.8
		ΔT	24.0	23.6	22.3	19.3	24.2	23.9	22.6	19.6	23.6	24.0	22.6	19.6	23.0	23.5	22.8	19.7	21.9	22.3	22.5	19.5	20.3	20.6	21.0	18.2
		kW	6.3	6.4	6.6	6.8	6.7	6.8	7.1	7.3	7.1	7.3	7.5	7.7	7.5	7.6	7.8	8.1	7.8	7.9	8.2	8.4	8.0	8.2	8.4	8.7
		Hi PR	241	259	274	285	270	291	307	320	307	331	349	364	350	377	398	415	394	424	448	467	435	468	495	516
		Lo PR	112	119	130	138	118	125	137	146	122	130	142	152	129	137	149	159	135	143	157	167	139	148	162	173
	3000	MBh	88	90	94	100	86	88	92	98	84	86	90	96	82	84	88	93	78	79	83	89	72	74	77	82
		S/T	0.93	0.89	0.81	0.7	0.96	0.93	0.84	0.7	0.98	0.95	0.86	0.7	1.00	0.98	0.89	0.7	1.00	1.00	0.92	0.7	1.00	1.00	0.93	0.8
		ΔT	25.0	24.6	23.3	20.1	25.3	24.9	23.6	20.4	25.4	24.9	23.6	20.4	25.1	25.1	23.7	20.6	23.9	24.3	23.4	20.3	22.1	22.5	21.9	18.9
		kW	6.2	6.3	6.5	6.7	6.7	6.8	7.0	7.2	7.1	7.2	7.4	7.6	7.4	7.6	7.8	8.0	7.7	7.9	8.1	8.4	7.9	8.1	8.4	8.6
		Hi PR	238	257	271	283	268	288	304	317	304	328	346	361	347	373	394	411	390	420	443	462	431	464	490	511
		Lo PR	110	118	128	137	117	124	136	144	121	129	141	150	127	136	148	158	134	142	155	165	138	147	160	171
	2400	MBh	81	83	87	93	79	81	85	91	78	79	83	88	76	77	81	86	72	73	77	82	67	68	71	75.9
		S/T	0.89	0.86	0.78	0.6	0.93	0.89	0.81	0.7	0.95	0.92	0.83	0.7	0.98	0.95	0.85	0.7	1.00	0.98	0.89	0.7	1.00	0.99	0.89	0.7
		ΔT	27.8	27.4	25.9	22.4	28.2	27.7	26.2	22.7	28.2	27.8	26.2	22.7	28.4	28.0	26.4	22.9	27.5	27.6	26.0	22.5	25.5	25.7	24.3	21.1
		kW	6.1	6.2	6.4	6.6	6.5	6.6	6.8	7.0	6.9	7.0	7.2	7.5	7.2	7.4	7.6	7.8	7.5	7.7	7.9	8.2	7.8	7.9	8.2	8.4
		Hi PR	231	249	263	274	260	279	295	308	295	318	335	350	336	362	382	399	378	407	430	448	418	450	475	495
		Lo PR	107	114	124	133	113	120	131	140	118	125	137	146	124	131	144	153	130	138	150	160	134	143	156	166

IDB: Entering Indoor Dry Bulb Temperature
Shaded area reflects AHRI Rating Conditions
Amps: Unit amps (comp.+ evaporator + condenser fan motors)
High and low pressures are measured at the liquid and suction access fittings.
Design Superheat 7±2 °F, Design Subcooling 12 ±2 °F pressures measured @ the suction and liquid service ports, AHRI 95 test conditions

Expanded Cooling Data — 8½ Tons

			Outdoor Ambient Temperature																							
			65				75				85				95				105				115			
			Entering Indoor Wet Bulb Temperature																							
IDB	Airflow		59	63	67	71	59	63	67	71	59	63	67	71	59	63	67	71	59	63	67	71	59	63	67	71
70	3820	MBh	100	104	114	-	98	101	111	-	95	99	108	-	93	96	106	-	88	92	100	-	82	85	93	-
		S/T	0.73	0.61	0.42	-	0.75	0.63	0.44	-	0.77	0.64	0.45	-	0.80	0.67	0.46	-	0.83	0.69	0.48	-	0.83	0.70	0.48	-
		ΔT	17.5	15.1	11.5	-	17.7	15.3	11.6	-	17.7	15.3	11.6	-	17.8	15.4	11.7	-	17.6	15.2	11.6	-	16.4	14.2	10.8	-
		kW	7.2	7.3	7.5	-	7.7	7.8	8.1	-	8.1	8.3	8.5	-	8.5	8.7	9.0	-	8.9	9.0	9.3	-	9.1	9.3	9.6	-
		Hi PR	238	256	270	-	267	287	303	-	303	326	345	-	345	372	392	-	389	418	442	-	429	462	488	-
		Lo PR	106	113	123	-	112	119	130	-	116	124	135	-	122	130	142	-	128	136	149	-	133	141	154	-
	3400	MBh	97	101	110	-	95	98	108	-	93	96	105	-	90	94	103	-	86	89	97	-	79	82	90	-
		S/T	0.69	0.58	0.40	-	0.72	0.60	0.42	-	0.74	0.62	0.43	-	0.76	0.63	0.44	-	0.79	0.66	0.46	-	0.80	0.66	0.46	-
		ΔT	18.2	15.7	11.9	-	18.4	15.9	12.1	-	18.4	16.0	12.1	-	18.6	16.1	12.2	-	18.3	15.8	12.0	-	17.1	14.8	11.2	-
		kW	7.1	7.3	7.5	-	7.6	7.8	8.0	-	8.1	8.2	8.5	-	8.5	8.6	8.9	-	8.8	9.0	9.2	-	9.1	9.3	9.5	-
		Hi PR	235	253	267	-	264	284	300	-	300	323	341	-	342	368	389	-	385	414	437	-	425	457	483	-
		Lo PR	105	112	122	-	111	118	129	-	115	123	134	-	121	129	141	-	127	135	147	-	131	140	152	-
	2980	MBh	90	93	102	-	87	91	99	-	85	89	97	-	83	86	95	-	79	82	90	-	73	76	83	-
		S/T	0.67	0.56	0.39	-	0.69	0.58	0.40	-	0.71	0.59	0.41	-	0.73	0.61	0.42	-	0.76	0.64	0.44	-	0.77	0.64	0.44	-
		ΔT	18.5	16.0	12.1	-	18.7	16.2	12.3	-	18.7	16.2	12.3	-	18.8	16.3	12.4	-	18.6	16.1	12.2	-	17.4	15.0	11.4	-
		kW	7.0	7.1	7.3	-	7.5	7.6	7.8	-	7.9	8.0	8.3	-	8.3	8.4	8.7	-	8.6	8.8	9.0	-	8.9	9.0	9.3	-
		Hi PR	228	246	259	-	256	276	291	-	291	313	331	-	332	357	377	-	373	402	424	-	412	444	469	-
		Lo PR	102	108	118	-	108	114	125	-	112	119	130	-	117	125	136	-	123	131	143	-	127	135	148	-
75	3820	MBh	102	105	113	122	99	102	111	119	97	100	108	116	95	97	105	113	90	92	100	107	83	86	93	100
		S/T	0.83	0.74	0.56	0.4	0.86	0.77	0.58	0.4	0.88	0.79	0.59	0.4	0.91	0.81	0.61	0.4	0.94	0.84	0.64	0.4	0.95	0.85	0.64	0.4
		ΔT	20.2	18.6	15.2	10.5	20.5	18.8	15.4	10.7	20.5	18.9	15.4	10.7	20.6	19.0	15.6	10.7	20.3	18.7	15.3	10.6	19.0	17.5	14.3	9.9
		kW	7.2	7.4	7.6	7.8	7.7	7.9	8.1	8.4	8.2	8.4	8.6	8.9	8.6	8.8	9.0	9.3	8.9	9.1	9.4	9.7	9.2	9.4	9.7	10.0
		Hi PR	240	258	273	284	269	290	306	319	306	330	348	363	349	375	396	414	392	422	446	465	434	467	493	514
		Lo PR	107	114	124	132	113	120	131	140	118	125	137	145	123	131	143	153	129	138	150	160	134	142	155	166
	3400	MBh	99	102	110	118	96	99	107	115	94	97	105	113	92	**95**	102	110	87	90	97	104	81	83	90	97
		S/T	0.79	0.70	0.53	0.3	0.82	0.73	0.55	0.4	0.84	0.75	0.57	0.4	0.86	**0.77**	0.58	0.4	0.90	0.80	0.61	0.4	0.90	0.81	0.61	0.4
		ΔT	21.0	19.4	15.9	11.0	21.3	19.6	16.1	11.1	21.3	19.6	16.1	11.1	21.4	**19.8**	16.2	11.2	21.1	19.5	16.0	11.0	19.8	18.2	14.9	10.3
		kW	7.2	7.3	7.5	7.8	7.7	7.8	8.1	8.3	8.1	8.3	8.5	8.8	8.5	**8.7**	9.0	9.2	8.9	9.0	9.3	9.6	9.1	9.3	9.6	9.9
		Hi PR	238	256	270	282	267	287	303	316	303	326	345	359	345	**372**	393	409	389	418	442	461	429	462	488	509
		Lo PR	106	113	123	131	112	119	130	139	116	124	135	144	122	**130**	142	151	128	136	149	159	133	141	154	164
	2980	MBh	91	94	102	109	89	92	99	106	87	89	97	104	85	87	94	101	80	83	90	96	75	77	83	89
		S/T	0.76	0.68	0.51	0.3	0.79	0.70	0.53	0.3	0.81	0.72	0.55	0.4	0.83	0.75	0.56	0.4	0.86	0.77	0.59	0.4	0.87	0.78	0.59	0.4
		ΔT	21.3	19.7	16.1	11.1	21.6	19.9	16.3	11.3	21.6	19.9	16.3	11.3	21.8	20.1	16.4	11.3	21.5	19.8	16.2	11.2	20.1	18.5	15.1	10.4
		kW	7.0	7.2	7.4	7.6	7.5	7.7	7.9	8.1	7.9	8.1	8.3	8.6	8.3	8.5	8.7	9.0	8.6	8.8	9.1	9.4	8.9	9.1	9.4	9.7
		Hi PR	231	248	262	273	259	278	294	307	294	317	334	349	335	361	381	397	377	406	428	447	416	448	473	494
		Lo PR	103	109	119	127	109	116	126	134	113	120	131	140	119	126	138	147	124	132	144	154	129	137	149	159

IDB: Entering Indoor Dry Bulb Temperature — Shaded area reflects ACCA (TVA) Rating Conditions — Amps: Unit amps (comp.+ evaporator + condenser fan motors)

High and low pressures are measured at the liquid and suction access fittings. — Design Subcooling, 10±2 °F @ liquid access fitting; AHRI 95 test conditions. Design Superheat 8±3°F @ compressor suction access fitting.

Expanded Cooling Data — 8½ Tons (cont.)

			Outdoor Ambient Temperature																							
			65				75				85				95				105				115			
			Entering Indoor Wet Bulb Temperature																							
IDB	Airflow		59	63	67	71	59	63	67	71	59	63	67	71	59	63	67	71	59	63	67	71	59	63	67	71
80	3820	MBh	103	106	113	121	101	103	110	118	99	101	108	115	96	98	105	112	91	93	100	107	85	87	92	99
		S/T	0.91	0.85	0.69	0.5	0.94	0.88	0.72	0.5	0.96	0.90	0.73	0.5	1.00	0.93	0.76	0.6	1.00	0.97	0.79	0.6	1.00	1.00	0.79	0.6
		ΔT	22.6	21.6	18.8	15.0	22.8	21.9	19.0	15.2	22.9	21.9	19.0	15.2	23.2	22.1	19.2	15.3	22.0	21.7	18.9	15.1	20.4	20.8	17.7	14.1
		kW	7.3	7.4	7.6	7.9	7.8	8.0	8.2	8.4	8.3	8.4	8.7	8.9	8.7	8.8	9.1	9.4	9.0	9.2	9.5	9.8	9.3	9.5	9.8	10.1
		Hi PR	242	261	276	287	272	293	309	322	309	333	352	367	352	379	400	418	396	427	451	470	438	471	498	519
		Lo PR	108	115	126	134	114	122	133	141	119	126	138	147	125	133	145	154	131	139	152	162	135	144	157	167
	3400	MBh	100	103	110	117	98	100	107	114	96	98	105	112	93	95	**102**	109	89	91	97	104	82	84	90	96
		S/T	0.86	0.81	0.66	0.49	0.90	0.84	0.68	0.51	0.92	0.86	0.70	0.52	0.95	0.89	**0.72**	0.54	0.98	0.92	0.75	0.56	0.99	0.93	0.76	0.6
		ΔT	23.5	22.5	19.6	15.6	23.8	22.8	19.8	15.8	23.8	22.8	19.8	15.8	23.9	22.9	**20.0**	15.9	23.6	22.6	19.7	15.7	22.1	21.1	18.4	14.7
		kW	7.2	7.4	7.6	7.8	7.7	7.9	8.1	8.4	8.2	8.4	8.6	8.9	8.6	8.8	**9.0**	9.3	8.9	9.1	9.4	9.7	9.2	9.4	9.7	10.0
		Hi PR	240	258	273	285	269	290	306	319	306	330	348	363	349	375	**397**	414	393	422	446	465	434	467	493	514
		Lo PR	107	114	124	132	113	120	131	140	118	125	137	145	124	131	**143**	153	129	138	150	160	134	142	155	166
	2980	MBh	93	95	101	108	91	93	99	106	88	90	96	103	86	88	94	101	82	84	89	96	76	78	83	89
		S/T	0.83	0.78	0.64	0.5	0.86	0.81	0.66	0.5	0.89	0.83	0.68	0.5	0.91	0.86	0.70	0.5	0.95	0.89	0.72	0.5	0.96	0.90	0.73	0.5
		ΔT	23.8	22.8	19.9	15.9	24.1	23.1	20.1	16.1	24.1	23.1	20.1	16.1	24.3	23.3	20.3	16.2	24.0	23.0	20.0	16.0	22.4	21.5	18.7	14.9
		kW	7.1	7.2	7.4	7.6	7.6	7.7	7.9	8.2	8.0	8.2	8.4	8.7	8.4	8.6	8.8	9.1	8.7	8.9	9.2	9.5	9.0	9.2	9.5	9.8
		Hi PR	233	251	265	276	261	281	297	310	297	320	338	352	338	364	385	401	381	410	433	451	421	453	478	499
		Lo PR	104	111	121	128	110	117	127	136	114	121	132	141	120	127	139	148	126	134	146	155	130	138	151	161
85	3820	MBh	105	107	112	120	103	105	110	117	100	102	107	114	98	100	105	112	93	95	99	106	86	88	92	98
		S/T	0.95	0.92	0.83	0.7	0.98	0.95	0.86	0.7	1.00	0.97	0.88	0.7	1.00	1.00	0.91	0.7	1.00	1.00	0.94	0.8	1.00	1.00	0.95	0.8
		ΔT	24.1	23.7	22.4	19.4	24.4	24.0	22.6	19.6	24.2	24.0	22.7	19.6	23.6	24.0	22.8	19.8	22.4	22.8	22.5	19.5	20.7	21.1	21.0	18.2
		kW	7.3	7.5	7.7	7.9	7.9	8.0	8.3	8.5	8.3	8.5	8.7	9.0	8.7	8.9	9.2	9.5	9.1	9.2	9.5	9.8	9.4	9.6	9.8	10.2
		Hi PR	245	264	278	290	275	296	312	326	313	336	355	370	356	383	404	422	400	431	455	475	442	476	503	524
		Lo PR	109	116	127	135	115	123	134	143	120	128	139	148	126	134	146	156	132	140	153	163	137	145	159	169
	3400	MBh	102	104	109	116	100	102	107	114	97	99	104	111	95	97	101	108	90	92	96	103	84	85	89	95
		S/T	0.91	0.87	0.79	0.64	0.94	0.91	0.82	0.66	0.96	0.93	0.84	0.68	0.99	0.96	0.87	0.70	1.00	1.00	0.90	0.73	1.00	1.00	0.91	0.7
		ΔT	25.0	24.6	23.3	20.1	25.3	24.9	23.6	20.4	25.4	24.9	23.6	20.4	25.5	25.1	23.7	20.6	24.4	24.8	23.4	20.3	22.6	23.1	21.9	18.9
		kW	7.3	7.4	7.6	7.9	7.8	8.0	8.2	8.4	8.3	8.4	8.7	8.9	8.7	8.8	9.1	9.4	9.0	9.2	9.5	9.8	9.3	9.5	9.8	10.1
		Hi PR	242	261	276	287	272	293	309	322	309	333	352	367	352	379	400	418	396	427	451	470	438	471	498	519
		Lo PR	108	115	126	134	114	122	133	141	119	126	138	147	125	133	145	154	131	139	152	162	135	144	157	167
	2980	MBh	94	96	101	107	92	94	98	105	90	92	96	102	88	89	94	100	83	85	89	95	77	79	82	88
		S/T	0.87	0.84	0.76	0.6	0.91	0.87	0.79	0.6	0.93	0.90	0.81	0.7	0.96	0.92	0.83	0.7	0.99	0.96	0.87	0.7	1.00	0.97	0.87	0.7
		ΔT	25.4	25.0	23.6	20.5	25.7	25.3	23.9	20.7	25.8	25.3	23.9	20.7	25.9	25.5	24.1	20.9	25.6	25.2	23.8	20.6	23.8	23.5	22.2	19.2
		kW	7.1	7.3	7.5	7.7	7.6	7.8	8.0	8.2	8.1	8.2	8.5	8.7	8.5	8.6	8.9	9.2	8.8	9.0	9.2	9.5	9.1	9.3	9.5	9.8
		Hi PR	235	253	267	279	264	284	300	313	300	323	341	356	342	368	388	405	385	414	437	456	425	457	483	504
		Lo PR	105	112	122	130	111	118	129	137	115	123	134	142	121	129	141	150	127	135	147	157	131	140	152	162

IDB: Entering Indoor Dry Bulb Temperature

Shaded areas reflect AHRI Rating Conditions

AMPS: Unit amps (comp.+ evaporator + condenser fan motors)

High and low pressures are measured at the liquid and suction access fittings.

Design Subcooling, 10±2 °F @ liquid access fitting; AHRI 95 test conditions. Design Superheat 8±3°F @ compressor suction access fitting.

Expanded Cooling Data — 10 Tons

			Outdoor Ambient Temperature																							
			65				75				85				95				105				115			
			Entering Indoor Wet Bulb Temperature																							
IDB	Airflow		59	63	67	71	59	63	67	71	59	63	67	71	59	63	67	71	59	63	67	71	59	63	67	71
70	3938	MBh	114	118	129	-	111	115	126	-	108	112	123	-	106	110	120	-	100	104	114	-	93	96	106	-
		S/T	0.73	0.61	0.42	-	0.76	0.63	0.44	-	0.78	0.65	0.45	-	0.80	0.67	0.47	-	0.83	0.70	0.48	-	0.84	0.70	0.49	-
		ΔT	19.5	16.8	12.8	-	19.7	17.1	12.9	-	19.7	17.1	13.0	-	19.9	17.2	13.0	-	19.6	16.9	12.9	-	18.3	15.8	12.0	-
		kW	8.2	8.4	8.6	-	8.8	8.9	9.2	-	9.3	9.4	9.7	-	9.7	9.9	10.2	-	10.0	10.2	10.5	-	10.4	10.6	10.9	-
		Hi PR	247	266	281	-	277	298	315	-	315	339	358	-	359	386	408	-	404	435	459	-	446	480	507	-
		Lo PR	105	111	122	-	111	118	128	-	115	122	134	-	121	128	140	-	127	135	147	-	131	139	152	-
	3500	MBh	110	114	125	-	108	112	122	-	105	109	119	-	103	106	117	-	98	101	111	-	90	94	103	-
		S/T	0.70	0.58	0.40	-	0.72	0.61	0.42	-	0.74	0.62	0.43	-	0.77	0.64	0.44	-	0.80	0.66	0.46	-	0.80	0.67	0.46	-
		ΔT	20.3	17.5	13.3	-	20.5	17.8	13.5	-	20.5	17.8	13.5	-	20.7	17.9	13.6	-	20.4	17.7	13.4	-	19.1	16.5	12.5	-
		kW	8.2	8.3	8.5	-	8.7	8.9	9.1	-	9.2	9.4	9.6	-	9.6	9.8	10.1	-	10.0	10.2	10.5	-	10.3	10.5	10.8	-
		Hi PR	245	263	278	-	274	295	312	-	312	336	355	-	355	383	404	-	400	430	454	-	442	476	502	-
		Lo PR	104	110	120	-	110	117	127	-	114	121	132	-	120	127	139	-	125	133	146	-	130	138	151	-
	2800	MBh	102	106	116	-	99	103	113	-	97	101	110	-	95	98	108	-	90	93	102	-	83	86	95	-
		S/T	0.67	0.56	0.39	-	0.70	0.58	0.40	-	0.72	0.60	0.41	-	0.74	0.62	0.43	-	0.77	0.64	0.44	-	0.77	0.65	0.45	-
		ΔT	22.6	19.5	14.8	-	22.8	19.8	15.0	-	22.9	19.8	15.0	-	23.0	19.9	15.1	-	22.7	19.6	14.9	-	21.2	18.3	13.9	-
		kW	8.0	8.1	8.4	-	8.5	8.7	8.9	-	9.0	9.2	9.4	-	9.4	9.6	9.9	-	9.7	9.9	10.2	-	10.0	10.2	10.6	-
		Hi PR	237	255	270	-	266	286	302	-	303	326	344	-	345	371	392	-	388	417	441	-	429	461	487	-
		Lo PR	101	107	117	-	106	113	123	-	110	117	128	-	116	123	135	-	122	129	141	-	126	134	146	-
75	3938	MBh	116	119	129	138	113	116	126	135	110	113	123	132	108	111	120	129	102	105	114	122	95	97	105	113
		S/T	0.83	0.75	0.56	0.4	0.86	0.77	0.58	0.4	0.89	0.79	0.60	0.4	0.91	0.82	0.62	0.4	0.95	0.85	0.64	0.4	0.96	0.86	0.65	0.4
		ΔT	22.5	20.7	17.0	11.7	22.8	21.0	17.2	11.9	22.8	21.0	17.2	11.9	23.0	21.1	17.3	12.0	22.6	20.8	17.1	11.8	21.1	19.5	15.9	11.0
		kW	8.3	8.4	8.7	8.9	8.8	9.0	9.3	9.5	9.3	9.5	9.8	10.1	9.8	9.9	10.2	10.5	10.1	10.3	10.6	10.9	10.4	10.6	11.0	11.3
		Hi PR	250	269	284	296	280	301	318	332	318	343	362	377	363	390	412	430	408	439	464	484	451	485	512	534
		Lo PR	106	113	123	131	112	119	130	138	116	124	135	144	122	130	142	151	128	136	148	158	132	141	154	164
	3500	MBh	112	116	125	134	110	113	122	131	107	110	119	128	104	**107**	116	125	99	102	111	119	92	95	102	110
		S/T	0.79	0.71	0.54	0.3	0.82	0.74	0.56	0.4	0.84	0.76	0.57	0.4	0.87	**0.78**	0.59	0.4	0.90	0.81	0.61	0.4	0.91	0.82	0.62	0.4
		ΔT	23.4	21.6	17.7	12.2	23.7	21.8	17.9	12.4	23.7	21.9	17.9	12.4	23.9	**22.0**	18.0	12.5	23.6	21.7	17.8	12.3	22.0	20.3	16.6	11.5
		kW	8.2	8.4	8.6	8.8	8.8	8.9	9.2	9.5	9.3	9.4	9.7	10.0	9.7	**9.9**	10.2	10.5	10.0	10.2	10.5	10.9	10.4	10.6	10.9	11.2
		Hi PR	247	266	281	293	277	298	315	329	315	339	358	374	359	**386**	408	426	404	435	459	479	446	480	507	529
		Lo PR	105	111	122	130	111	118	128	137	115	122	134	142	121	**128**	140	149	127	135	147	157	131	139	152	162
	2800	MBh	104	107	115	124	101	104	113	121	99	102	110	118	96	99	107	115	92	94	102	109	85	87	95	101
		S/T	0.77	0.69	0.52	0.3	0.79	0.71	0.54	0.3	0.81	0.73	0.55	0.4	0.84	0.75	0.57	0.4	0.87	0.78	0.59	0.4	0.88	0.79	0.60	0.4
		ΔT	26.1	24.0	19.7	13.6	26.4	24.3	19.9	13.7	26.4	24.3	19.9	13.8	26.6	24.5	20.1	13.9	26.2	24.2	19.8	13.7	24.5	22.6	18.5	12.8
		kW	8.1	8.2	8.4	8.7	8.6	8.7	9.0	9.2	9.1	9.2	9.5	9.8	9.5	9.7	9.9	10.2	9.8	10.0	10.3	10.6	10.1	10.3	10.6	11.0
		Hi PR	240	258	272	284	269	289	306	319	306	329	348	362	348	375	396	413	392	422	445	464	433	466	492	513
		Lo PR	102	108	118	126	107	114	125	133	112	119	130	138	117	125	136	145	123	131	143	152	127	135	148	157

IDB: Entering Indoor Dry Bulb Temperature — Shaded area reflects ACCA (TVA) Rating Conditions — Amps: Unit amps (comp.+ evaporator + condenser fan motors)

High and low pressures are measured at the liquid and suction access fittings. — Design Superheat 7±2 °F, Design Subcooling 12 ±2 °F pressures measured @ the suction and liquid service ports, AHRI 95 test conditions

Expanded Cooling Data — 10 Tons (cont.)

			Outdoor Ambient Temperature																							
			65				75				85				95				105				115			
			Entering Indoor Wet Bulb Temperature																							
IDB	Airflow		59	63	67	71	59	63	67	71	59	63	67	71	59	63	67	71	59	63	67	71	59	63	67	71
80	3938	MBh	118	120	128	137	115	117	125	134	112	115	122	131	109	112	119	128	104	106	114	121	96	98	105	112
		S/T	0.91	0.86	0.70	0.5	0.95	0.89	0.72	0.5	1.00	0.91	0.74	0.6	1.00	0.94	0.77	0.6	1.00	1.00	0.79	0.6	1.00	1.00	0.80	0.6
		ΔT	25.1	24.1	20.9	16.7	25.4	24.4	21.2	16.9	26.2	24.4	21.2	16.9	25.6	24.6	21.4	17.1	24.3	24.8	21.1	16.8	22.5	23.0	19.7	15.7
		kW	8.3	8.5	8.7	9.0	8.9	9.1	9.3	9.6	9.4	9.6	9.8	10.1	9.8	10.0	10.3	10.6	10.2	10.4	10.7	11.0	10.5	10.7	11.0	11.4
		Hi PR	252	271	286	299	283	304	321	335	322	346	366	381	366	394	416	434	412	444	468	489	455	490	517	540
		Lo PR	107	114	124	132	113	120	131	140	117	125	136	145	123	131	143	152	129	137	150	160	134	142	155	165
	3500	MBh	114	117	125	133	112	114	122	130	109	111	119	127	106	109	**116**	124	101	103	110	118	94	96	102	109
		S/T	0.87	0.82	0.67	0.50	0.90	0.85	0.69	0.52	0.93	0.87	0.71	0.53	0.96	0.90	**0.73**	0.55	0.99	0.93	0.76	0.57	1.00	0.94	0.76	0.6
		ΔT	26.2	25.1	21.8	17.4	26.5	25.4	22.1	17.6	26.5	25.4	22.1	17.6	26.7	25.6	**22.2**	17.8	26.3	25.2	21.9	17.5	24.6	23.6	20.5	16.4
		kW	8.3	8.4	8.7	8.9	8.8	9.0	9.3	9.5	9.3	9.5	9.8	10.1	9.8	9.9	**10.2**	10.5	10.1	10.3	10.6	11.0	10.4	10.6	11.0	11.3
		Hi PR	250	269	284	296	280	301	318	332	318	343	362	377	363	390	**412**	430	408	439	464	484	451	485	512	534
		Lo PR	106	113	123	131	112	119	130	138	116	124	135	144	122	130	**142**	151	128	136	149	158	132	141	154	164
	2800	MBh	105	108	115	123	103	105	112	120	101	103	110	117	98	100	107	114	93	95	102	109	86	88	94	101
		S/T	0.84	0.79	0.64	0.5	0.87	0.82	0.67	0.5	0.89	0.84	0.68	0.5	0.92	0.86	0.70	0.5	0.96	0.90	0.73	0.5	0.97	0.91	0.74	0.6
		ΔT	29.1	27.9	24.3	19.4	29.5	28.2	24.5	19.6	29.5	28.3	24.6	19.6	29.7	28.5	24.7	19.8	29.3	28.1	24.4	19.5	27.3	26.2	22.8	18.2
		kW	8.1	8.3	8.5	8.7	8.6	8.8	9.1	9.3	9.1	9.3	9.6	9.8	9.5	9.7	10.0	10.3	9.9	10.1	10.4	10.7	10.2	10.4	10.7	11.0
		Hi PR	242	261	275	287	272	292	309	322	309	332	351	366	352	379	400	417	396	426	450	469	437	471	497	518
		Lo PR	103	109	119	127	108	115	126	134	113	120	131	139	118	126	137	146	124	132	144	153	128	136	149	159
85	3938	MBh	120	122	128	136	117	119	125	133	114	116	122	130	111	114	119	127	106	108	113	120	98	100	105	112
		S/T	0.96	0.92	0.83	0.7	0.99	0.96	0.86	0.7	1.00	0.98	0.89	0.7	1.00	1.00	0.92	0.7	1.00	1.00	0.95	0.8	1.00	1.00	0.96	0.8
		ΔT	26.8	26.3	24.9	21.6	27.1	26.7	25.2	21.8	26.7	26.7	25.2	21.8	26.0	26.5	25.4	22.0	24.7	25.2	25.1	21.7	22.9	23.3	23.4	20.3
		kW	8.4	8.6	8.8	9.0	9.0	9.1	9.4	9.7	9.5	9.6	9.9	10.2	9.9	10.1	10.4	10.7	10.3	10.5	10.8	11.1	10.6	10.8	11.1	11.5
		Hi PR	255	274	289	302	286	307	325	339	325	350	369	385	370	398	420	439	416	448	473	493	460	495	523	545
		Lo PR	108	115	125	133	114	121	132	141	118	126	138	147	124	132	145	154	130	139	151	161	135	144	157	167
	3500	MBh	116	118	124	132	114	116	121	129	111	113	118	126	108	110	115	123	103	105	110	117	95	97	102	108
		S/T	0.91	0.88	0.80	0.65	0.95	0.91	0.82	0.67	0.97	0.94	0.85	0.69	1.00	0.97	0.87	0.71	1.00	1.00	0.91	0.74	1.00	1.00	0.91	0.7
		ΔT	27.9	27.4	25.9	22.5	28.2	27.8	26.3	22.7	28.3	27.8	26.3	22.8	28.4	28.0	26.5	22.9	27.0	27.5	26.1	22.6	25.0	25.5	24.4	21.1
		kW	8.3	8.5	8.7	9.0	8.9	9.1	9.3	9.6	9.4	9.6	9.8	10.1	9.8	10.0	10.3	10.6	10.2	10.4	10.7	11.0	10.5	10.7	11.0	11.4
		Hi PR	252	271	286	299	283	304	321	335	322	346	366	381	366	394	416	434	412	444	468	489	455	490	517	540
		Lo PR	107	114	124	132	113	120	131	140	117	125	136	145	123	131	143	152	129	137	150	160	134	142	155	165
	2800	MBh	107	109	115	122	105	107	112	119	102	104	109	116	100	102	107	114	95	97	101	108	88	90	94	100
		S/T	0.88	0.85	0.77	0.6	0.91	0.88	0.80	0.6	0.94	0.90	0.82	0.7	0.97	0.93	0.84	0.7	1.00	0.97	0.87	0.7	1.00	0.98	0.88	0.7
		ΔT	31.0	30.5	28.9	25.0	31.4	30.9	29.2	25.3	31.5	30.9	29.2	25.3	31.7	31.2	29.4	25.5	31.1	30.7	29.0	25.1	28.8	28.7	27.1	23.5
		kW	8.2	8.3	8.5	8.8	8.7	8.9	9.1	9.4	9.2	9.4	9.6	9.9	9.6	9.8	10.1	10.4	10.0	10.2	10.5	10.8	10.3	10.5	10.8	11.1
		Hi PR	244	263	278	290	274	295	312	325	312	336	355	370	355	382	404	421	400	430	454	474	442	475	502	524
		Lo PR	104	110	120	128	109	116	127	135	114	121	132	141	120	127	139	148	125	133	145	155	130	138	150	160

IDB: Entering Indoor Dry Bulb Temperature — Shaded area reflects AHRI Rating Conditions — Amps: Unit amps (comp.+ evaporator + condenser fan motors)

High and low pressures are measured at the liquid and suction access fittings. — Design Superheat 7±2 °F, Design Subcooling 12 ±2 °F pressures measured @ the suction and liquid service ports, AHRI 95 test conditions

Expanded Cooling Data — 12½ Tons

			Outdoor Ambient Temperature																							
			65				75				85				95				105				115			
			Entering Indoor Wet Bulb Temperature																							
IDB	Airflow		59	63	67	71	59	63	67	71	59	63	67	71	59	63	67	71	59	63	67	71	59	63	67	71
70	4725	MBh	143	148	162	-	140	145	159	-	136	141	155	-	133	138	151	-	126	131	144	-	117	121	133	-
		S/T	0.70	0.59	0.41	-	0.73	0.61	0.42	-	0.75	0.62	0.43	-	0.77	0.64	0.45	-	0.80	0.67	0.46	-	0.81	0.67	0.47	-
		ΔT	19.6	16.9	12.9	-	19.8	17.2	13.0	-	19.8	17.2	13.0	-	20.0	17.3	13.1	-	19.7	17.0	12.9	-	18.4	15.9	12.1	-
		kW	10.4	10.6	11.0	-	11.2	11.5	11.8	-	11.9	12.2	12.6	-	12.5	12.8	13.2	-	13.1	13.4	13.8	-	13.5	13.8	14.3	-
		Hi PR	247	266	281	-	277	298	315	-	315	339	358	-	359	386	408	-	404	434	459	-	446	480	507	-
		Lo PR	100	107	117	-	106	113	123	-	110	117	128	-	116	123	135	-	121	129	141	-	126	134	146	-
	4200	MBh	139	144	158	-	136	141	154	-	132	137	150	-	129	134	147	-	123	127	139	-	114	118	129	-
		S/T	0.67	0.56	0.39	-	0.69	0.58	0.40	-	0.71	0.60	0.41	-	0.74	0.61	0.43	-	0.76	0.64	0.44	-	0.77	0.64	0.45	-
		ΔT	20.4	17.6	13.4	-	20.6	17.9	13.6	-	20.7	17.9	13.6	-	20.8	18.0	13.7	-	20.5	17.8	13.5	-	19.2	16.6	12.6	-
		kW	10.3	10.6	10.9	-	11.1	11.4	11.7	-	11.8	12.1	12.5	-	12.4	12.7	13.1	-	13.0	13.2	13.7	-	13.4	13.7	14.2	-
		Hi PR	244	263	278	-	274	295	312	-	312	336	355	-	355	382	404	-	400	430	454	-	442	475	502	-
		Lo PR	99	106	116	-	105	112	122	-	109	116	127	-	115	122	133	-	120	128	140	-	124	132	144	-
	3360	MBh	128	133	146	-	125	130	142	-	122	127	139	-	119	124	135	-	113	117	129	-	105	109	119	-
		S/T	0.65	0.54	0.37	-	0.67	0.56	0.39	-	0.69	0.57	0.40	-	0.71	0.59	0.41	-	0.74	0.61	0.43	-	0.74	0.62	0.43	-
		ΔT	22.7	19.6	14.9	-	23.0	19.9	15.1	-	23.0	19.9	15.1	-	23.1	20.0	15.2	-	22.8	19.8	15.0	-	21.3	18.5	14.0	-
		kW	10.1	10.3	10.6	-	10.9	11.1	11.4	-	11.5	11.8	12.2	-	12.1	12.4	12.8	-	12.6	12.9	13.3	-	13.1	13.4	13.8	-
		Hi PR	237	255	269	-	266	286	302	-	303	326	344	-	345	371	392	-	388	417	441	-	428	461	487	-
		Lo PR	97	103	112	-	102	108	118	-	106	113	123	-	111	118	129	-	117	124	135	-	121	128	140	-
75	4725	MBh	145	150	162	174	142	146	158	170	139	143	155	166	135	139	151	162	129	132	143	154	119	123	133	142
		S/T	0.80	0.71	0.54	0.3	0.83	0.74	0.56	0.4	0.85	0.76	0.57	0.4	0.88	0.78	0.59	0.4	0.91	0.81	0.62	0.4	0.92	0.82	0.62	0.4
		ΔT	22.6	20.8	17.1	11.8	22.9	21.1	17.3	11.9	22.9	21.1	17.3	11.9	23.1	21.3	17.4	12.0	22.8	21.0	17.2	11.9	21.3	19.6	16.0	11.1
		kW	10.5	10.7	11.1	11.4	11.3	11.5	11.9	12.3	12.0	12.3	12.7	13.1	12.6	12.9	13.3	13.8	13.2	13.5	13.9	14.4	13.6	13.9	14.4	14.9
		Hi PR	249	268	283	296	280	301	318	332	318	343	362	377	363	390	412	430	408	439	463	483	451	485	512	534
		Lo PR	102	108	118	126	107	114	125	133	111	119	129	138	117	125	136	145	123	131	143	152	127	135	147	157
	4200	MBh	141	145	157	169	138	142	154	165	135	139	150	161	131	**135**	146	157	125	129	139	149	116	119	129	138
		S/T	0.76	0.68	0.52	0.3	0.79	0.71	0.53	0.3	0.81	0.72	0.55	0.4	0.84	**0.75**	0.57	0.4	0.87	0.78	0.59	0.4	0.88	0.78	0.59	0.4
		ΔT	23.6	21.7	17.8	12.3	23.9	22.0	18.0	12.4	23.9	22.0	18.0	12.4	24.0	**22.1**	18.1	12.5	23.7	21.8	17.9	12.4	22.1	20.4	16.7	11.5
		kW	10.4	10.6	11.0	11.3	11.2	11.5	11.8	12.2	11.9	12.2	12.6	13.0	12.5	**12.8**	13.2	13.7	13.1	13.4	13.8	14.3	13.5	13.8	14.3	14.8
		Hi PR	247	266	281	293	277	298	315	328	315	339	358	374	359	**386**	408	425	404	435	459	479	446	480	507	529
		Lo PR	101	107	117	124	106	113	123	131	110	117	128	137	116	**123**	135	143	121	129	141	150	126	134	146	155
	3360	MBh	130	134	145	156	127	131	142	152	124	128	139	149	121	125	135	145	115	119	128	138	107	110	119	128
		S/T	0.73	0.66	0.50	0.3	0.76	0.68	0.52	0.3	0.78	0.70	0.53	0.3	0.81	0.72	0.55	0.4	0.84	0.75	0.57	0.4	0.84	0.75	0.57	0.4
		ΔT	26.2	24.1	19.8	13.7	26.5	24.4	20.0	13.8	26.6	24.5	20.0	13.8	26.8	24.6	20.2	13.9	26.4	24.3	19.9	13.7	24.6	22.7	18.6	12.8
		kW	10.2	10.4	10.7	11.0	10.9	11.2	11.5	11.9	11.6	11.9	12.3	12.7	12.2	12.5	12.9	13.3	12.7	13.0	13.5	13.9	13.2	13.5	13.9	14.4
		Hi PR	240	258	272	284	269	289	305	319	306	329	347	362	348	375	396	413	392	422	445	464	433	466	492	513
		Lo PR	97	104	113	121	103	110	120	127	107	114	124	132	112	120	131	139	118	125	137	146	122	130	142	151

IDB: Entering Indoor Dry Bulb Temperature — Shaded area reflects ACCA Rating Conditions — Amps: Unit amps (comp.+ evaporator + condenser fan motors)

High and low pressures are measured at the liquid and suction access fittings. — Design Superheat 7±2 °F, Design Subcooling 12 ±2 °F pressures measured @ the suction and liquid service ports, AHRI 95 test conditions

Expanded Cooling Data — 12½ Tons (cont.)

			Outdoor Ambient Temperature																							
			65				75				85				95				105				115			
			Entering Indoor Wet Bulb Temperature																							
IDB	Airflow		59	63	67	71	59	63	67	71	59	63	67	71	59	63	67	71	59	63	67	71	59	63	67	71
80	4725	MBh	148	151	162	173	145	148	158	169	141	144	154	165	138	141	150	161	131	134	143	153	121	124	132	141
		S/T	0.88	0.82	0.67	0.5	0.91	0.85	0.69	0.5	0.93	0.87	0.71	0.5	0.96	0.90	0.73	0.5	1.00	0.94	0.76	0.6	1.00	0.94	0.77	0.6
		ΔT	25.3	24.2	21.0	16.8	25.6	24.5	21.3	17.0	25.6	24.5	21.3	17.0	25.8	24.7	21.5	17.2	25.5	24.4	21.2	16.9	23.6	22.7	19.8	15.8
		kW	10.6	10.8	11.1	11.5	11.4	11.6	12.0	12.4	12.1	12.4	12.8	13.2	12.8	13.0	13.5	13.9	13.3	13.6	14.0	14.5	13.8	14.1	14.5	15.0
		Hi PR	252	271	286	299	283	304	321	335	322	346	365	381	366	394	416	434	412	443	468	488	455	490	517	539
		Lo PR	103	109	119	127	108	115	126	134	113	120	131	139	118	126	137	146	124	132	144	153	128	136	149	159
	4200	MBh	144	147	157	168	140	143	153	164	137	140	150	160	134	137	**146**	156	127	130	139	148	118	120	128	137
		S/T	0.84	0.78	0.64	0.48	0.87	0.81	0.66	0.49	0.89	0.83	0.68	0.51	0.92	0.86	**0.70**	0.52	0.95	0.89	0.73	0.54	0.96	0.90	0.73	0.5
		ΔT	26.3	25.2	21.9	17.5	26.6	25.5	22.2	17.7	26.7	25.5	22.2	17.7	26.8	25.7	**22.4**	17.9	26.5	25.4	22.1	17.6	24.7	23.7	20.6	16.5
		kW	10.5	10.7	11.1	11.4	11.3	11.6	11.9	12.3	12.0	12.3	12.7	13.1	12.6	12.9	**13.4**	13.8	13.2	13.5	13.9	14.4	13.6	13.9	14.4	14.9
		Hi PR	249	268	283	296	280	301	318	332	318	343	362	377	363	390	**412**	430	408	439	464	483	451	485	512	534
		Lo PR	102	108	118	126	107	114	125	133	111	119	129	138	117	125	**136**	145	123	131	143	152	127	135	147	157
	3360	MBh	133	136	145	155	130	132	141	151	127	129	138	148	123	126	135	144	117	120	128	137	109	111	119	127
		S/T	0.81	0.76	0.62	0.5	0.84	0.78	0.64	0.5	0.86	0.80	0.65	0.5	0.88	0.83	0.67	0.5	0.92	0.86	0.70	0.5	0.93	0.87	0.71	0.5
		ΔT	29.3	28.0	24.4	19.5	29.6	28.4	24.7	19.7	29.7	28.4	24.7	19.7	29.9	28.6	24.9	19.9	29.4	28.2	24.5	19.6	27.5	26.4	22.9	18.3
		kW	10.3	10.5	10.8	11.1	11.0	11.3	11.6	12.0	11.7	12.0	12.4	12.8	12.3	12.6	13.0	13.4	12.9	13.1	13.6	14.0	13.3	13.6	14.0	14.5
		Hi PR	242	260	275	287	271	292	309	322	309	332	351	366	352	378	400	417	396	426	450	469	437	470	497	518
		Lo PR	98	105	114	122	104	111	121	129	108	115	126	134	114	121	132	140	119	127	138	147	123	131	143	152
85	4725	MBh	151	154	161	172	147	150	157	168	144	146	153	164	140	143	150	160	133	136	142	152	123	126	132	140
		S/T	0.92	0.89	0.80	0.6	0.95	0.92	0.83	0.7	0.98	0.94	0.85	0.7	1.00	0.97	0.88	0.7	1.00	1.00	0.91	0.7	1.00	1.00	0.92	0.7
		ΔT	26.9	26.5	25.0	21.7	27.3	26.8	25.4	21.9	27.3	26.8	25.4	22.0	27.3	27.0	25.6	22.1	25.9	26.4	25.2	21.8	24.0	24.5	23.5	20.4
		kW	10.7	10.9	11.2	11.6	11.5	11.7	12.1	12.5	12.2	12.5	12.9	13.3	12.9	13.1	13.6	14.0	13.4	13.7	14.2	14.6	13.9	14.2	14.7	15.2
		Hi PR	254	274	289	302	286	307	324	338	325	349	369	385	370	398	420	438	416	448	473	493	460	495	522	545
		Lo PR	104	110	120	128	109	116	127	135	114	121	132	141	119	127	139	148	125	133	145	155	129	138	150	160
	4200	MBh	146	149	156	167	143	146	153	163	139	142	149	159	136	139	145	155	129	132	138	147	120	122	128	136
		S/T	0.88	0.85	0.76	0.62	0.91	0.88	0.79	0.64	0.93	0.90	0.81	0.66	0.96	0.93	0.84	0.68	1.00	0.96	0.87	0.70	1.00	0.97	0.88	0.7
		ΔT	28.1	27.6	26.1	22.6	28.4	27.9	26.4	22.9	28.4	28.0	26.4	22.9	28.6	28.2	26.6	23.0	28.2	27.8	26.2	22.7	26.2	25.9	24.5	21.2
		kW	10.6	10.8	11.1	11.5	11.4	11.6	12.0	12.4	12.1	12.4	12.8	13.2	12.8	13.0	13.5	13.9	13.3	13.6	14.0	14.5	13.8	14.1	14.5	15.0
		Hi PR	252	271	286	299	283	304	321	335	322	346	365	381	366	394	416	434	412	443	468	488	455	490	517	539
		Lo PR	103	109	119	127	108	115	126	134	113	120	131	139	118	126	137	146	124	132	144	153	128	136	149	159
	3360	MBh	135	138	144	154	132	134	141	150	129	131	137	147	126	128	134	143	119	122	127	136	111	113	118	126
		S/T	0.85	0.82	0.74	0.6	0.88	0.85	0.76	0.6	0.90	0.87	0.78	0.6	0.93	0.89	0.81	0.7	0.96	0.93	0.84	0.7	0.97	0.94	0.84	0.7
		ΔT	31.2	30.7	29.0	25.1	31.6	31.1	29.4	25.4	31.6	31.1	29.4	25.5	31.9	31.3	29.6	25.6	31.4	30.9	29.2	25.3	29.3	28.9	27.3	23.6
		kW	10.3	10.5	10.9	11.2	11.1	11.4	11.7	12.1	11.8	12.1	12.5	12.9	12.4	12.7	13.1	13.6	13.0	13.2	13.7	14.1	13.4	13.7	14.2	14.6
		Hi PR	244	263	278	290	274	295	312	325	312	336	354	370	355	382	404	421	400	430	454	474	442	475	502	523
		Lo PR	99	106	116	123	105	112	122	130	109	116	127	135	115	122	133	142	120	128	140	149	124	132	144	154

IDB: Entering Indoor Dry Bulb Temperature — Shaded area reflects AHRI Rating Conditions — Amps: Unit amps (comp.+ evaporator + condenser fan motors)

High and low pressures are measured at the liquid and suction access fittings. — Design Superheat 7±2 °F, Design Subcooling 12 ±2 °F pressures measured @ the suction and liquid service ports, AHRI 95 test conditions

Airflow Data — 7½ Tons

Standard Belt Drive — Down Shot

ESP (" W.C.)	Turns Open																	
	0			1			2			3			4			5		
	CFM	RPM	BHP	CFM	RPM	BHP	CFM	RPM	BHP	CFM	RPM	BHP	CFM	RPM	BHP	CFM	RPM	BHP
0.1	---	---	---	---	---	---	---	---	---	3522	750	1.14	3228	706	0.94	2964	661	0.73
0.3	---	---	---	---	---	---	3337	800	1.19	3102	756	1	2800	706	0.76	2504	661	0.59
0.5	---	---	---	3387	844	1.32	2834	806	0.99	2603	757	0.8	---	---	---	---	---	---
0.7	3453	893	1.5	2903	850	1.12	---	---	---	---	---	---	---	---	---	---	---	---
0.9	2957	899	1.29	---	---	---	---	---	---	---	---	---	---	---	---	---	---	---

High-Static Belt Drive — Down Shot (for A Models only)

ESP (" W.C.)	Turns Open																	
	0			1			2			3			4			5		
	CFM	RPM	BHP	CFM	RPM	BHP	CFM	RPM	BHP	CFM	RPM	BHP	CFM	RPM	BHP	CFM	RPM	BHP
0.7	---	---	---	---	---	---	---	---	---	---	---	---	---	---	---	3575	904	1.66
0.9	---	---	---	---	---	---	---	---	---	---	---	---	3258	925	1.56	3113	909	1.41
1.1	---	---	---	---	---	---	---	---	---	3580	1013	1.97	3001	948	1.42	2722	915	1.25
1.3	---	---	---	---	---	---	3616	1063	2.17	3247	1019	1.79	2646	959	1.3	---	---	---
1.5	---	---	---	---	---	---	3275	1069	2.05	2803	1025	1.68	---	---	---	---	---	---
1.7	---	---	---	3346	1118	2.24	2885	1074	1.97	---	---	---	---	---	---	---	---	---
1.9	---	---	---	3009	1125	2.05	---	---	---	---	---	---	---	---	---	---	---	---
2.1	---	---	---	---	---	---	---	---	---	---	---	---	---	---	---	---	---	---

Standard Belt Drive — Horizontal

ESP (" W.C.)	Turns Open																	
	0			1			2			3			4			5		
	CFM	RPM	BHP	CFM	RPM	BHP	CFM	RPM	BHP	CFM	RPM	BHP	CFM	RPM	BHP	CFM	RPM	BHP
0.1	---	---	---	---	---	---	---	---	---	---	---	---	3381	703	0.99	3078	659	0.78
0.3	---	---	---	---	---	---	3560	796	1.26	3271	747	1.02	2946	703	0.82	2604	659	0.63
0.5	---	---	---	3492	841	1.36	3159	799	1.09	2819	752	0.86	---	---	---	---	---	---
0.7	3453	891	1.5	3094	846	1.18	---	---	---	---	---	---	---	---	---	---	---	---
0.9	2964	896	1.29	2524	852	0.96	---	---	---	---	---	---	---	---	---	---	---	---
1.1	2537	902	1.08	---	---	---	---	---	---	---	---	---	---	---	---	---	---	---

High-Static Belt Drive — Horizontal (for A Models only)

ESP (" W.C.)	Turns Open																	
	0			1			2			3			4			5		
	CFM	RPM	BHP	CFM	RPM	BHP	CFM	RPM	BHP	CFM	RPM	BHP	CFM	RPM	BHP	CFM	RPM	BHP
0.7	---	---	---	---	---	---	---	---	---	---	---	---	---	---	---	3567	903	1.58
0.9	---	---	---	---	---	---	---	---	---	---	---	---	3596	953	1.79	3145	906	1.39
1.1	---	---	---	---	---	---	---	---	---	3630	1007	1.97	3168	963	1.56	2675	909	1.18
1.3	---	---	---	---	---	---	3649	1063	2.19	3255	1021	1.8	2724	965	1.35	---	---	---
1.5	---	---	---	---	---	---	3316	1068	2.0	2823	1058	1.61	---	---	---	---	---	---
1.7	---	---	---	3287	1112	2.16	2869	1074	1.78	---	---	---	---	---	---	---	---	---
1.9	---	---	---	2970	1122	2.0	---	---	---	---	---	---	---	---	---	---	---	---
2.1	---	---	---	2644	1133	1.92	---	---	---	---	---	---	---	---	---	---	---	---

Notes :
Assume dry coil with filter in place; CFM correction for wet coil = 3%
Any adjustment made to the blower should not cause the motor to draw more than the motor rated RLA. Applications that exceed the above could require a larger motor. Minimum rated SCFM is 350 per ton.

Airflow Data — 8½ Tons

Standard Belt Drive -- Down Shot

ESP (" W.C.)	Turns Open																	
	0			1			2			3			4			5		
	CFM	RPM	BHP	CFM	RPM	BHP	CFM	RPM	BHP	CFM	RPM	BHP	CFM	RPM	BHP	CFM	RPM	BHP
0.1	---	---	---	---	---	---	---	---	---	3372	747	1.11	3078	703	0.91	2814	658	0.70
0.3	---	---	---	---	---	---	3187	797	1.16	2952	753	0.97	2650	703	0.73	---	---	---
0.5	---	---	---	3237	841	1.29	2684	803	0.96	2453	754	0.77	---	---	---	---	---	---
0.7	3303	890	1.47	2753	847	1.09	---	---	---	---	---	---	---	---	---	---	---	---
0.9	2807	896	1.26	---	---	---	---	---	---	---	---	---	---	---	---	---	---	---

High-Static Belt Drive -- Down Shot

ESP (" W.C.)	Turns Open																	
	0			1			2			3			4			5		
	CFM	RPM	BHP	CFM	RPM	BHP	CFM	RPM	BHP	CFM	RPM	BHP	CFM	RPM	BHP	CFM	RPM	BHP
0.7	---	---	---	---	---	---	---	---	---	---	---	---	---	---	---	3425	901	1.63
0.9	---	---	---	---	---	---	---	---	---	---	---	---	3108	922	1.53	2963	906	1.38
1.1	---	---	---	---	---	---	---	---	---	3430	1010	1.94	2851	945	1.39	2572	912	1.22
1.3	---	---	---	---	---	---	3466	1060	2.14	3097	1016	1.76	2496	956	1.27	---	---	---
1.5	---	---	---	---	---	---	3125	1066	2.02	2653	1022	1.65	---	---	---	---	---	---
1.7	---	---	---	3196	1115	2.21	2735	1071	1.94	---	---	---	---	---	---	---	---	---
1.9	3251	1160	2.36	2859	1122	2.02	---	---	---	---	---	---	---	---	---	---	---	---
2.1	2914	1167	2.17	---	---	---	---	---	---	---	---	---	---	---	---	---	---	---

Standard Belt Drive -- Horizontal

ESP (" W.C.)	Turns Open																	
	0			1			2			3			4			5		
	CFM	RPM	BHP	CFM	RPM	BHP	CFM	RPM	BHP	CFM	RPM	BHP	CFM	RPM	BHP	CFM	RPM	BHP
0.1	---	---	---	---	---	---	---	---	---	---	---	---	3231	700	0.96	2928	656	0.75
0.3	---	---	---	---	---	---	3410	793	1.23	3121	744	0.99	2796	700	0.79	---	---	---
0.5	---	---	---	3342	838	1.33	3009	796	1.06	2669	749	0.83	---	---	---	---	---	---
0.7	3303	888	1.47	2944	843	1.15	---	---	---	---	---	---	---	---	---	---	---	---
0.9	2814	893	1.26	---	---	---	---	---	---	---	---	---	---	---	---	---	---	---

High-Static Belt Drive -- Horizontal

ESP (" W.C.)	Turns Open																	
	0			1			2			3			4			5		
	CFM	RPM	BHP	CFM	RPM	BHP	CFM	RPM	BHP	CFM	RPM	BHP	CFM	RPM	BHP	CFM	RPM	BHP
0.7	---	---	---	---	---	---	---	---	---	---	---	---	---	---	---	3417	900	1.55
0.9	---	---	---	---	---	---	---	---	---	---	---	---	3446	950	1.76	2995	903	1.36
1.1	---	---	---	---	---	---	---	---	---	3480	1004	1.94	3018	960	1.53	2525	906	1.15
1.3	---	---	---	---	---	---	3499	1060	2.16	3105	1018	1.77	2574	962	1.32	---	---	---
1.5	---	---	---	---	---	---	3166	1065	1.97	2673	1055	1.58	---	---	---	---	---	---
1.7	---	---	---	3137	1109	2.13	2719	1071	1.75	---	---	---	---	---	---	---	---	---
1.9	3107	1154	2.28	2820	1119	1.97	---	---	---	---	---	---	---	---	---	---	---	---
2.1	2790	1164	2.12	---	---	---	---	---	---	---	---	---	---	---	---	---	---	---

Notes :
Assume dry coil with filter in place; CFM correction for wet coil = 3%
Any adjustment made to the blower should not cause the motor to draw more than the motor rated RLA. Applications that exceed the above could require a larger motor. Minimum rated SCFM is 350 per ton.

Airflow Data — 10 Tons

Standard & Two-Speed Belt-Drive at High Speed — Down Shot

ESP (" W.C.)	Turns Open																	
	0			1			2			3			4			5		
	CFM	RPM	BHP	CFM	RPM	BHP	CFM	RPM	BHP	CFM	RPM	BHP	CFM	RPM	BHP	CFM	RPM	BHP
0.2	---	---	---	---	---	---	4316	780	1.57	4118	738	1.36	3771	687	1.08	3376	644	0.85
0.4	---	---	---	4282	830	1.76	3928	786	1.4	3595	740	1.13	---	---	---	---	---	---
0.6	4232	874	1.87	3872	830	1.52	3444	786	1.2	---	---	---	---	---	---	---	---	---
0.8	3839	880	1.64	3367	836	1.27	---	---	---	---	---	---	---	---	---	---	---	---
1	3326	885	1.4	---	---	---	---	---	---	---	---	---	---	---	---	---	---	---
1.2	---	---	---	---	---	---	---	---	---	---	---	---	---	---	---	---	---	---
1.4	---	---	---	---	---	---	---	---	---	---	---	---	---	---	---	---	---	---

High-Static Belt-Drive — Down Shot

ESP (" W.C.)	Turns Open																	
	0			1			2			3			4			5		
	CFM	RPM	BHP	CFM	RPM	BHP	CFM	RPM	BHP	CFM	RPM	BHP	CFM	RPM	BHP	CFM	RPM	BHP
0.8	---	---	---	---	---	---	---	---	---	---	---	---	4188	943	2.11	3793	889	1.67
1	---	---	---	---	---	---	---	---	---	4305	1002	2.39	3836	946	1.89	3416	893	1.45
1.2	---	---	---	---	---	---	4324	1053	2.63	3879	1003	2.11	3425	951	1.63	---	---	---
1.4	---	---	---	4428	1109	2.92	3973	1056	2.35	3434	1009	1.8	---	---	---	---	---	---
1.6	4465	1160	3.2	4088	1113	2.67	3506	1068	2.1	---	---	---	---	---	---	---	---	---
1.8	4129	1168	2.9	3625	1122	2.3	---	---	---	---	---	---	---	---	---	---	---	---
2	3694	1175	2.65	---	---	---	---	---	---	---	---	---	---	---	---	---	---	---

Standard & Two-Speed Belt-Drive at High Speed — Horizontal

ESP (" W.C.)	Turns Open																	
	0			1			2			3			4			5		
	CFM	RPM	BHP	CFM	RPM	BHP	CFM	RPM	BHP	CFM	RPM	BHP	CFM	RPM	BHP	CFM	RPM	BHP
0.2	---	---	---	---	---	---	---	---	---	4391	737	1.48	4054	693	1.22	3760	645	0.97
0.4	---	---	---	---	---	---	4314	781	1.61	3969	737	1.29	3534	693	1	---	---	---
0.6	---	---	---	4255	826	1.69	3894	781	1.38	3447	743	1.09	---	---	---	---	---	---
0.8	4234	876	1.85	3792	832	1.47	---	---	---	---	---	---	---	---	---	---	---	---
1	3724	877	1.59	---	---	---	---	---	---	---	---	---	---	---	---	---	---	---
1.2	---	---	---	---	---	---	---	---	---	---	---	---	---	---	---	---	---	---
1.4	---	---	---	---	---	---	---	---	---	---	---	---	---	---	---	---	---	---

High-Static Belt-Drive — Horizontal

ESP (" W.C.)	Turns Open																	
	0			1			2			3			4			5		
	CFM	RPM	BHP	CFM	RPM	BHP	CFM	RPM	BHP	CFM	RPM	BHP	CFM	RPM	BHP	CFM	RPM	BHP
0.8	DO NOT OPERATE			---	---	---	---	---	---	---	---	---	---	---	---	4408	885	2.02
1				---	---	---	---	---	---	---	---	---	4464	940	2.29	3929	891	1.76
1.2				---	---	---	---	---	---	4585	996	2.58	4026	946	2	3436	897	1.46
1.4				---	---	---	4697	1049	2.92	4141	1001	2.26	3509	951	1.7	---	---	---
1.6				---	---	---	4264	1056	2.58	3663	1007	1.96	---	---	---	---	---	---
1.8				4359	1105	2.85	3785	1061	2.22	---	---	---	---	---	---	---	---	---
2				3907	1114	2.49	---	---	---	---	---	---	---	---	---	---	---	---

Notes
Assume dry coil with filter in place; CFM correction for wet coil = 3%
Any adjustment made to the blower should not cause the motor to draw more than the motor rated RLA. Applications that exceed the above could require a larger motor. Minimum rated SCFM is 350 per ton.

Airflow Data — 12½ Tons

Standard Belt Drive --- Down Shot

ESP (" W.C.)	Turns Open											
	0		1		2		3		4		5	
	CFM	BHP	CFM	BHP	CFM	BHP	CFM	BHP	CFM	BHP	CFM	BHP
0.2	5514	2.92	5604	3.22	5064	2.16	4775	1.81	4514	1.49	4271	1.23
0.4	5279	2.74	5110	2.40	4696	1.94	4447	1.63	4123	1.31	---	---
0.6	5185	2.67	4813	2.20	4352	1.74	4039	1.43	---	---	---	---
0.8	4766	2.37	4526	2.02	---	---	---	---	---	---	---	---
1.0	4223	2.01	---	---	---	---	---	---	---	---	---	---

High-Static Belt Drive --- Down Shot

ESP (" W.C.)	Turns Open											
	0		1		2		3		4		5	
	CFM	BHP	CFM	BHP	CFM	BHP	CFM	BHP	CFM	BHP	CFM	BHP
0.6	---	---	---	---	---	---	---	---	5515	3.21	5124	2.68
0.8	---	---	---	---	5840	4.06	5781	3.73	5344	3.07	4721	2.37
1.0	---	---	5908	4.49	5643	3.86	5369	3.36	4887	2.71	4365	2.13
1.2	5869	4.74	5542	4.11	5229	3.47	4853	2.92	4404	2.35	3986	1.88
1.4	5464	4.30	5180	3.75	4917	3.19	4584	2.71	4197	2.21	---	---
1.6	5229	4.05	4960	3.53	4397	2.75	4204	2.41	---	---	---	---
1.8	4961	3.78	4553	3.16	---	---	---	---	---	---	---	---
2.0	4790	3.61	4315	2.95	---	---	---	---	---	---	---	---

Standard Belt Drive --- Horizontal

ESP (" W.C.)	Turns Open											
	0		1		2		3		4		5	
	CFM	BHP	CFM	BHP	CFM	BHP	CFM	BHP	CFM	BHP	CFM	BHP
0.2	5762	3.08	5485	2.63	5140	2.21	4855	1.84	4513	1.48	4197	1.20
0.4	5550	2.91	5207	2.44	4857	2.03	4489	1.64	4100	1.29	---	---
0.6	5202	2.65	4922	2.25	4487	1.81	4113	1.45	---	---	---	---
0.8	4898	2.43	4515	1.99	4074	1.58	---	---	---	---	---	---
1.0	4549	2.20	4135	1.76	---	---	---	---	---	---	---	---
1.2	4258	2.01	---	---	---	---	---	---	---	---	---	---

High-Static Belt Drive --- Horizontal

ESP (" W.C.)	Turns Open											
	0		1		2		3		4		5	
	CFM	BHP	CFM	BHP	CFM	BHP	CFM	BHP	CFM	BHP	CFM	BHP
0.6	---	---	---	---	---	---	5967	3.92	5451	3.16	5275	2.77
0.8	---	---	---	---	---	---	5628	3.61	5223	2.97	4959	2.54
1.0	---	---	---	---	5840	4.10	5385	3.39	4999	2.80	4635	2.31
1.2	---	---	---	---	5643	3.90	5003	3.06	4803	2.65	4160	1.99
1.4	6007	4.93	5740	4.32	5229	3.51	4576	2.71	4440	2.38	---	---
1.6	5752	4.64	5401	3.97	4917	3.23	---	---	---	---	---	---
1.8	5380	4.24	5033	3.61	4397	2.79	---	---	---	---	---	---
2.0	5065	3.91	4573	3.18	---	---	---	---	---	---	---	---

Notes

- Assume dry coil with filter in place; CFM correction for wet coil = 3%
- Any adjustment made to the blower should not cause the motor to draw more than the motor rated RLA. Application
- that exceed the above could require a larger motor. Minimum rated SCFM is 350 per ton.

Dimensions

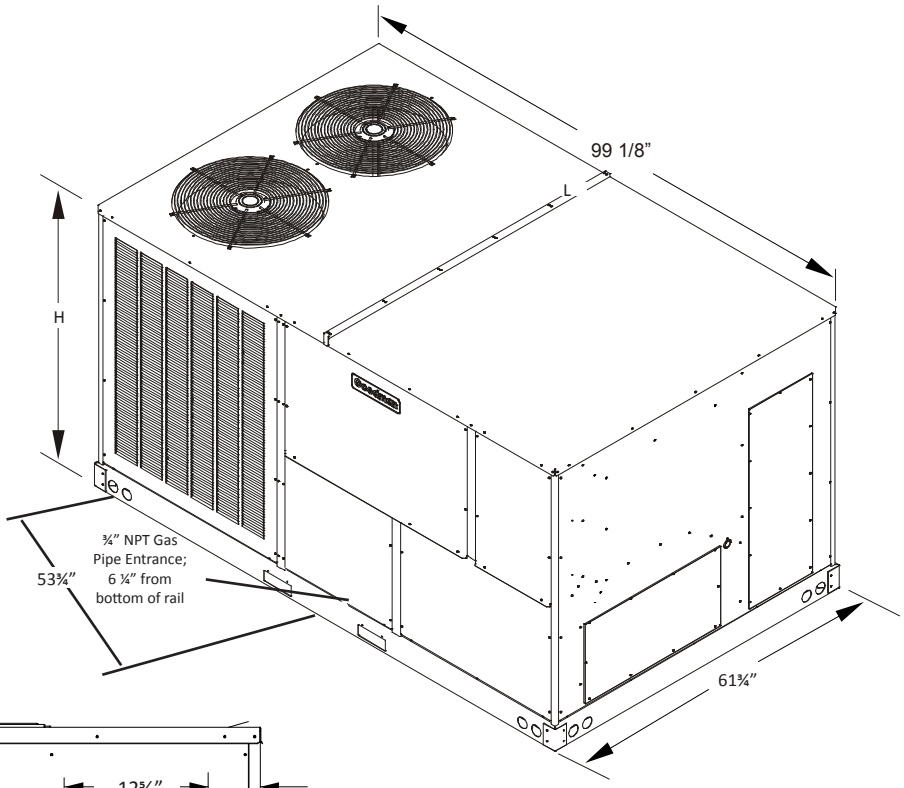

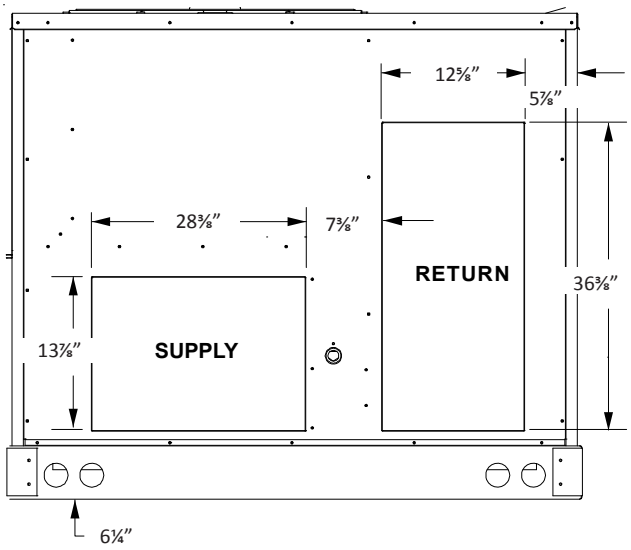

HORIZONTAL DISCHARGE

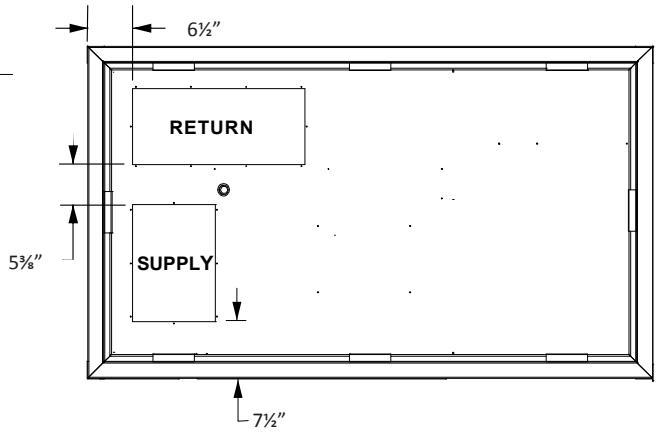

VERTICAL DISCHARGE (BOTTOM OF UNIT)

Model Size	Dimensions	
	H	L
7½ to 10 Tons	52⅞”	99⅛”
12½ Tons	58⅞”	99⅛”

Unit Clearances

Maintain an adequate clearance around the unit for safety, service, maintenance, and proper unit operation. Leave a total clearance of 75” on the main control panel side of the unit for possible removal of fan shaft, coil, electric heat, and gas furnace. Leave a clearance of 48” on all other sides of the unit for possible compressor removal or service access, and to ensure proper ventilation and condenser airflow. Do not install the unit beneath any obstruction. Install the unit away from all building exhausts to inhibit ingestion of exhaust air into the unit’s fresh-air intake.

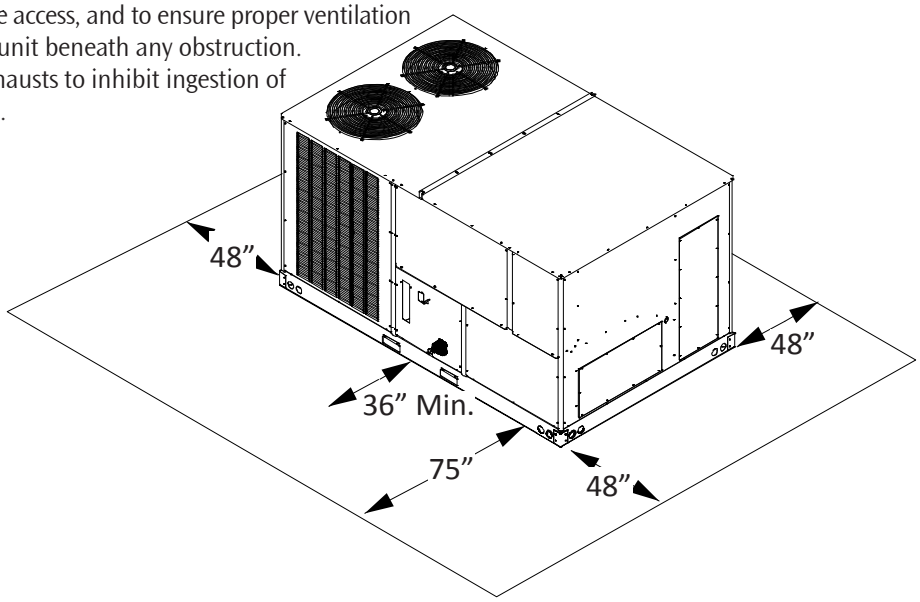

Electrical Entrance Locations

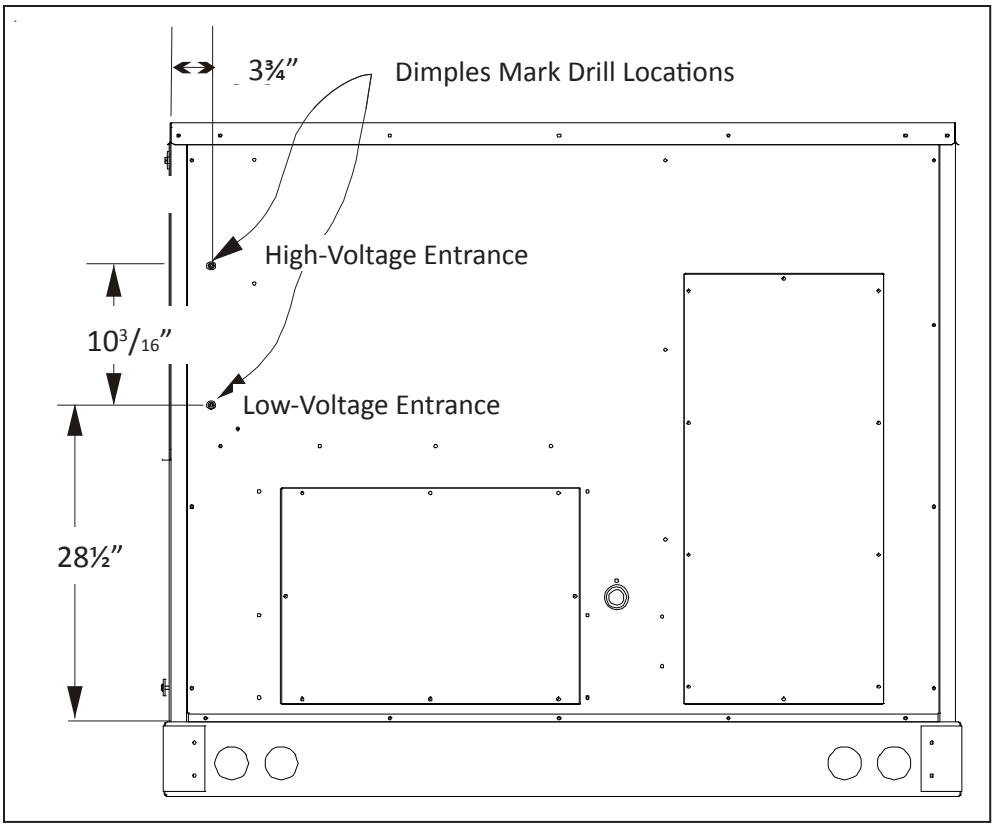

Roof Curb Installation — Rigging

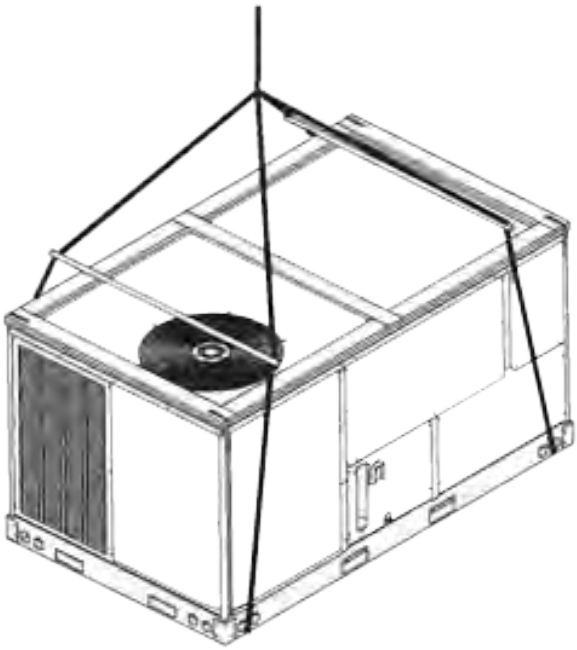

Provisions for forks have been included in the unit base frame. No other fork locations are approved.

- Unit must be lifted by the four lifting holes located at the base frame corners.
- Lifting cables should be attached to the unit with shackles.
- The distance between the crane hook and the top of the unit must not be less than 60”.
- Two spreader bars must span over the unit to prevent damage to the cabinet by the lift cables. Spreader bars must be of sufficient length so that cables do not come in contact with the unit during transport. Remove wood struts mounted beneath unit base frame before setting unit on roof curb. These struts are intended to protect unit base frame from fork lift damage. To remove the struts, extract the sheet metal retainers and pull the struts through the base of the unit. Refer to rigging label on the unit.

Important: If using bottom discharge with roof curb, duct-work should be attached to the curb prior to installing the unit. Duct-work dimensions are shown in Roof Curb Installation Instructions Manual.

Refer to the Roof Curb Installation Instructions for proper curb installation. Curbing must be installed in compliance with the National Roofing Contractors Association Manual.

Lower unit carefully onto roof mounting curb. While rigging the unit, the center of gravity will cause the condenser end to be lower than the supply air end.

Bring condenser end of unit into alignment with the curb. With condenser end of the unit resting on curb member and using curb as a fulcrum, lower opposite end of the unit until entire unit is seated on the curb. When a rectangular cantilever curb is used, take care to center the unit. Check for proper alignment and orientation of supply and return openings with duct.

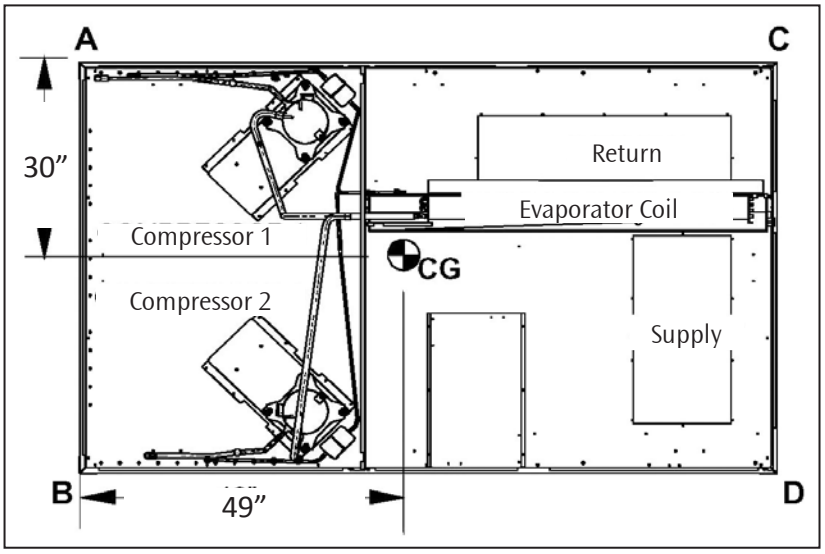

Corner & Center-of-Gravity Locations

Weight Types	7½-Ton & 8½-Ton Weights (lbs)	10-Ton Weights (lbs)	12½-Ton Weights (lbs)
Weight A	269	255	335
Weight B	297	321	390
Weight C	254	250	295
Weight D	280	314	345
Shipping Weight	1175	1215	1390
Operating Weight	1100	1140	1365

To assist in determining rigging requirements, unit weights are shown to the right.

Note: These weights are calculated without accessories installed.

Roof Curb Installation (cont.)

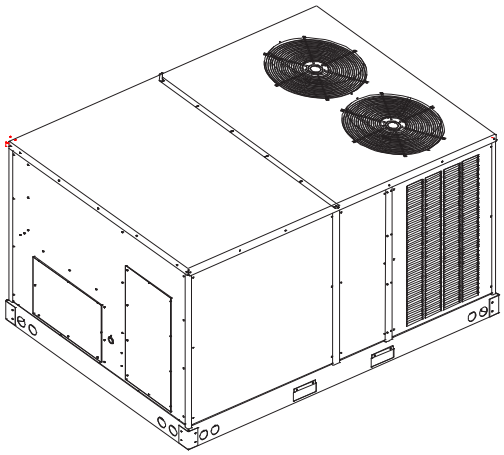

Curb installations must comply with local codes and should follow the established guidelines of the National Roofing Contractors Association.

Proper unit installation requires that the roof curb be firmly and permanently attached to the roof structure. Check for adequate fastening method prior to setting the unit on the curb.

Full perimeter roof curbs are available from the factory and are shipped unassembled. The installing contractor is responsible for field assembly, squaring, leveling, and mounting on the roof structure. All required hardware necessary for the assembly of the sheet metal curb is included in the curb accessory package.

- Determine sufficient structural support before locating and mounting the curb and package unit.
- Duct-work must be constructed using industry guidelines. The duct-work must be placed into the roof curb before mounting the package unit. Our full perimeter curbs include duct connection frames to be assembled with the curb. Cantilevered-type curbs are not available from the factory.
- Contractor furnishes curb insulation, cant strips, flashing, and general roofing material.
- Support curbs on parallel sides with roof members. To prevent damage to the unit, the roof members cannot penetrate supply and return duct openings.

Note: The unit and curb accessories are designed to allow vertical duct installation before unit placement. Duct installation after unit placement is not recommended.

See the manual shipped with the roof curb for assembly and installation instructions.

3-D View

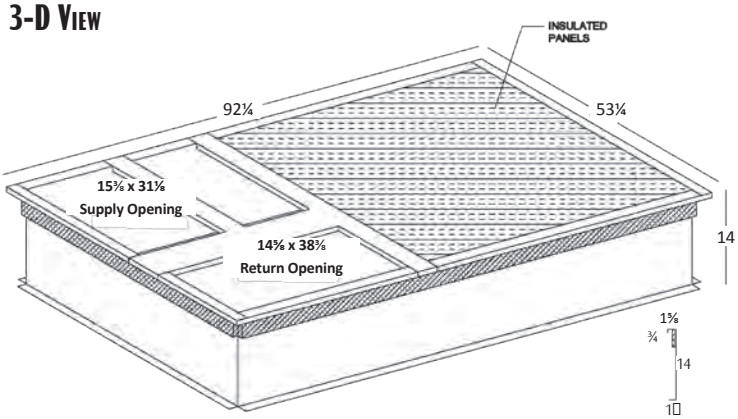

Top View

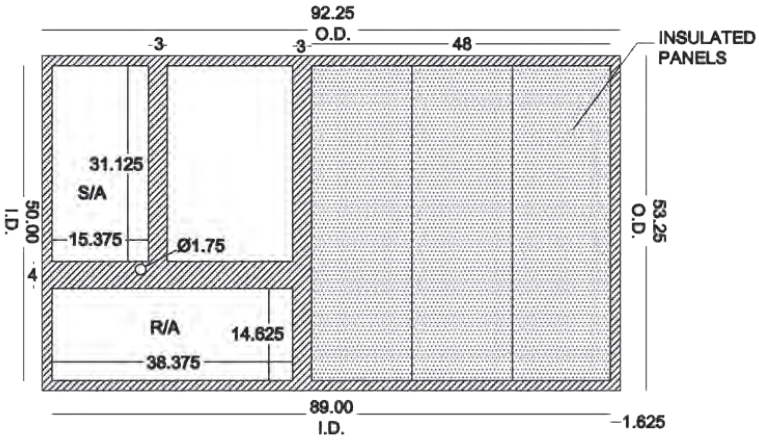

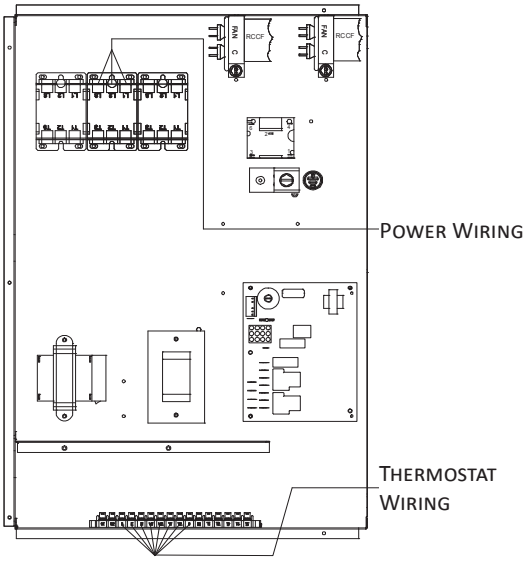

Power and Low-Voltage Block Locations

WIRING DIAGRAM — CPG090/150***3B***

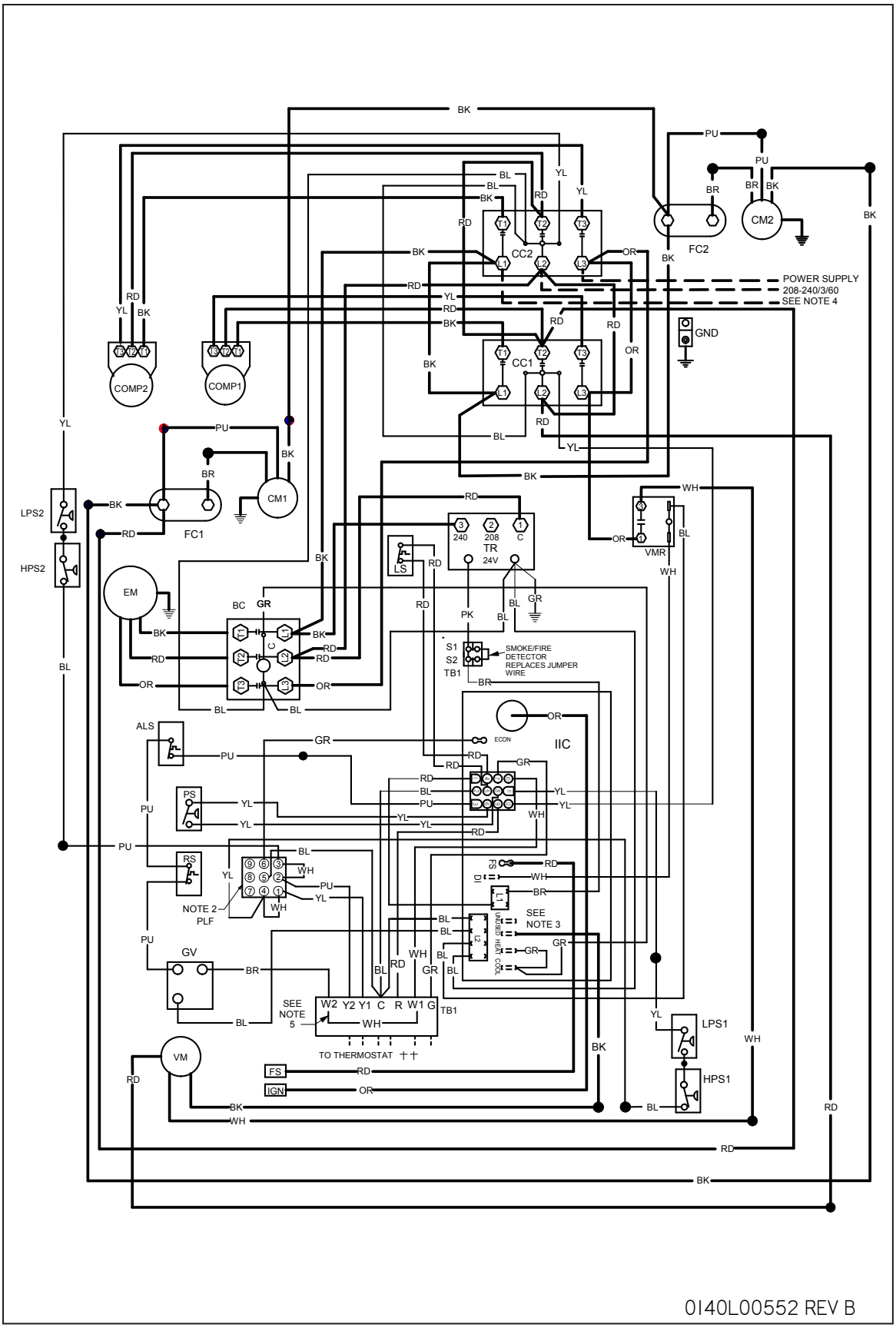

WARNING

High Voltage: Disconnect all power before servicing or installing this unit. Multiple power sources may be present. Failure to do so may cause property damage, personal injury, or death.

Wiring is subject to change. Always refer to the wiring diagram or the unit for the most up-to-date wiring.

WIRING DIAGRAM — CPG090/150***3B*** (CONT.)

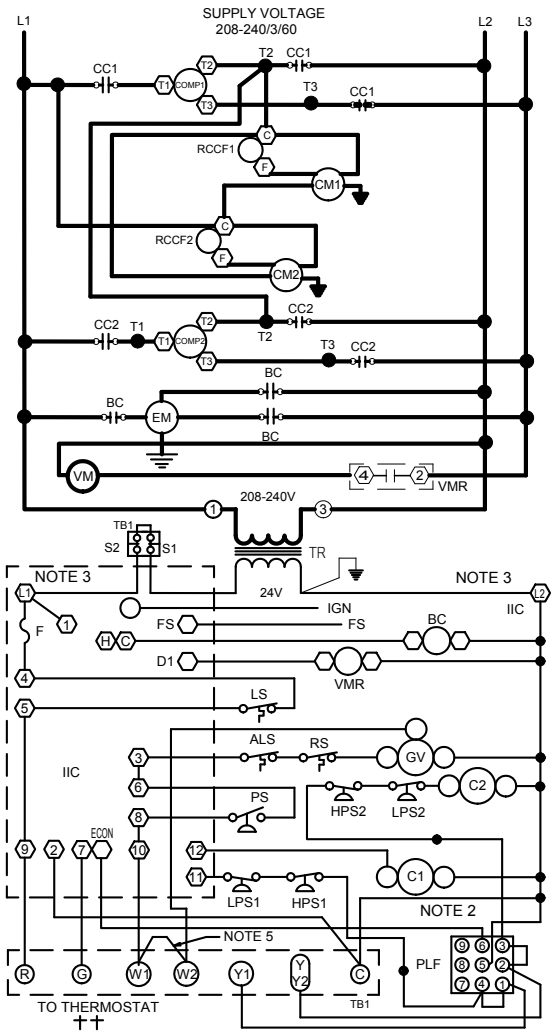

COMPONENT LEGEND

ALS	AUXILLARY LIMIT SWITCH
BC	BLOWER CONTACTOR
CC	COMPRESSOR CONTACTOR
CM	CONDENSER MOTOR
COMP	COMPRESSOR
EM	EVAPORATOR MOTOR
F	FUSE
FC	FAN CAPACITOR
FS	FLAME SENSOR
GND	EQUIPMENT GROUND
GV	GAS VALVE
HPS	HIGH PRESSURE SWITCH
IBR	INDOOR BLOWER RELAY
IIC	INTEGRATED IGNITION CONTROL
IGN	IGNITOR
LPS	LOW PRESSURE SWITCH
LS	LIMIT SWITCH
PLF	FEMALE PLUG/CONNECTOR
PS	PRESSURE SWITCH
RS	ROLLOUT SWITCH
TB1	TERMINAL BLOCK (24V SIGNAL)
TR	TRANSFORMER
VM	VENT MOTOR
VMR	VENT MOTOR RELAY

FACTORY WIRING
- LINE VOLTAGE
- LOW VOLTAGE
- OPTIONAL HIGH VOLTAGE

FIELD WIRING
- HIGH VOLTAGE
- LOW VOLTAGE

WIRE CODE

BK	BLACK
BL	BLUE
BR	BROWN
GR	GREEN
OR	ORANGE
PK	PINK
PU	PURPLE
RD	RED
WH	WHITE
YL	YELLOW
YL /PK	YELLOW WITH PINK STRIP
BL /PK	BLUE WITH PINK STRIP

NOTES

1. REPLACEMENT WIRE MUST BE THE SAME SIZE AND TYPE OF INSULATION AS ORIGINAL. (USE COPPER CONDUCTOR ONLY).
2. ACCESSORY ECONOMIZER PLUG ADJACENT TO BLOWER HOUSING IN RETURN AIR COMPARTMENT. REMOVE MALE PLUG AND ATTACH FEMALE PLUG TO THE ECONOMIZER ACCESSORY.
3. L1 AND L2 ON IIC CONTROL IS 24V INPUT.
4. USE COPPER CONDUCTORS ONLY.
   ++ USE NEC CLASS 2 WIRE.
5. FOR TWO STAGE OPERATION REMOVE W1 TO W2 JUMPER WIRE
6. FOR 208V 0PERATION MOVE BLACK WIRE FROM TERMINAL ③ TO TERMINAL ② ON TRANSFORMER.

THERMOSTAT FIELD WIRING ++

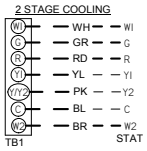

INSTALLER/SERVICEMAN

THE STATUS LIGHT ON THE FURNACE CONTROL MAY BE USED AS A GUIDE TO TROUBLESHOOTING THIS APPLIANCE. STATUS LIGHT CODES ARE AS FOLLOWS:

STATUS LIGHT	EQUIPMENT STATUS	CHECK
ON	NORMAL OPERATION	------
OFF	NO POWER OR INTERNAL CONTROL	CHECK INPUT POWER CHECK FUSE ON CONTROL REPLACE CONTROL
1 BLINK	IGNITION FAILURE OPEN ROLLOUT SWITCH OPEN AUX. LIMIT SWITCH	GAS FLOW GAS PRESSURE GAS VALVE FLAME SENSOR FLAME ROLLOUT BAD SWITCH AUX. LIMIT OPEN
2 BLINKS	PRESSURE SWITCH OPEN	CHECK PRESSURE SWITCH
3 BLINKS	PRESSURE SWITCH CLOSED WITHOUT INDUCER ON	CHECK PRESSURE SWITCH
4 BLINKS	OPEN LIMIT SWITCH	MAIN LIMIT OPEN BAD SWITCH
5 BLINKS	FALSE FLAME SENSED	STICKING GAS VALVE
6 BLINKS	COMPRESSOR OUTPUT DELAY	3 MIN. COMP. ANTI-CYCLE TIMER

SEE UNIT RATING PLATE FOR TYPE AND SIZE OF OVER CURRENT PROTECTION

208-240/3/60 0140L00553 REV B

High Voltage: Disconnect all power before servicing or installing this unit. Multiple power sources may be present. Failure to do so may cause property damage, personal injury, or death.

WARNING

Wiring is subject to change. Always refer to the wiring diagram or the unit for the most up-to-date wiring.

WIRING DIAGRAM — CPG090/150***4B / 7B***

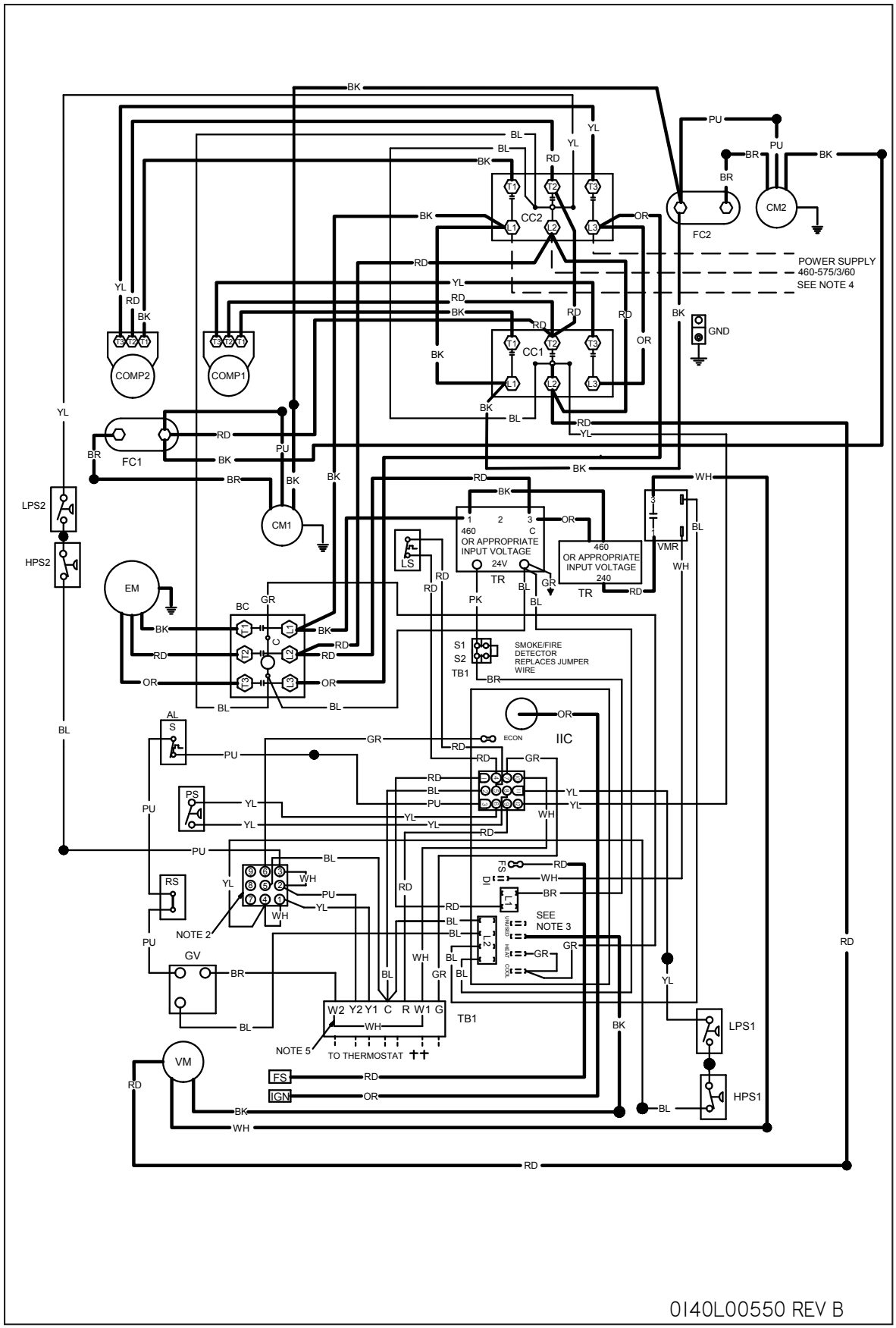

WARNING

High Voltage: Disconnect all power before servicing or installing this unit. Multiple power sources may be present. Failure to do so may cause property damage, personal injury, or death.

Wiring is subject to change. Always refer to the wiring diagram or the unit for the most up-to-date wiring.

WIRING DIAGRAM — CPG090/150***4B / 7B*** (CONT.)

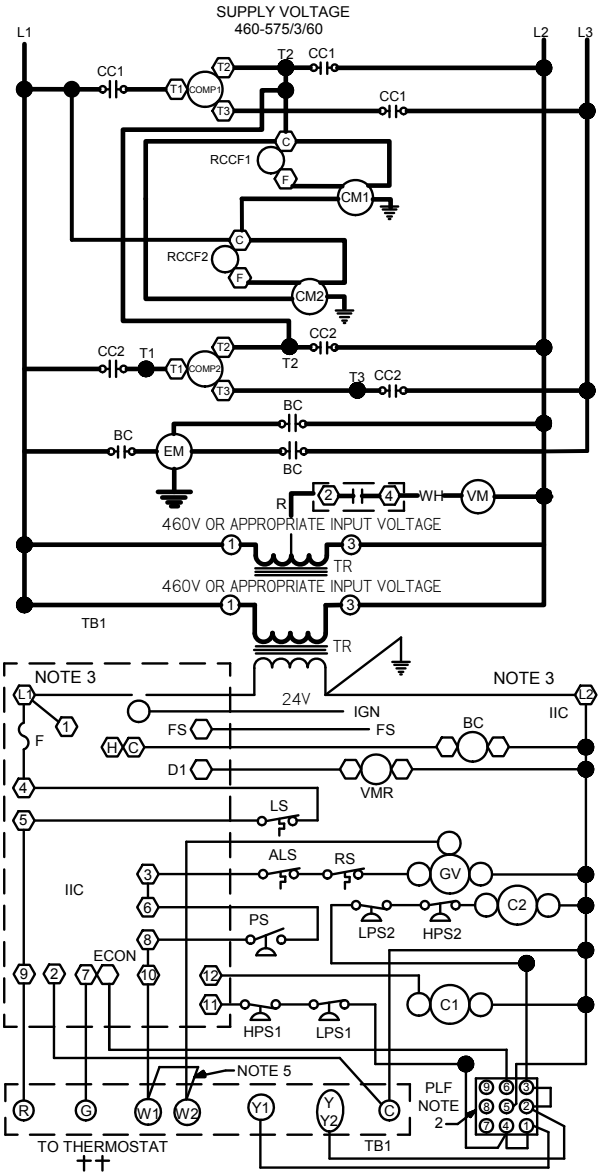

COMPONENT LEGEND

ALS	AUXILLARY LIMIT SWITCH
BC	BLOWER CONTACTOR
COMP	COMPRESSOR
CM	CONDENSER MOTOR
CC	COMPRESSOR CONTACTOR
EM	EVAPORATOR MOTOR
F	FUSE
FC	FAN CAPACITOR
FS	FLAME SENSOR
GND	EQUIPMENT GROUND
GV	GAS VALVE
HPS	HIGH PRESSURE SWITCH
IBR	INDOOR BLOWER RELAY
IIC	INTEGRATED IGNITION CONTROL
IGN	IGNITOR
LPS	LOW PRESSURE SWITCH
LS	LIMIT SWITCH
PLF	FEMALE PLUG/CONNECTOR
PS	PRESSURE SWITCH
RS	ROLLOUT SWITCH
TB1	TERMINAL BLOCK (24V SIGNAL)
TR	TRANSFORMER
VM	VENT MOTOR
VMR	VENT MOTOR RELAY

NOTES

1. REPLACEMENT WIRE MUST BE THE SAME SIZE AND TYPE OF INSULATION AS ORIGINAL. (USE COPPER CONDUCTOR ONLY).
2. ACCESSORY ECONOMIZER PLUG ADJACENT TO BLOWER HOUSING IN RETURN AIR COMPARTMENT. REMOVE MALE PLUG AND ATTACH FEMALE PLUG TO THE ECONOMIZER ACCESSORY.
3. L1 AND L2 ON IIC CONTROL IS 24V INPUT.
4. USE COPPER CONDUCTORS ONLY.
   ++ USE NEC CLASS 2 WIRE.
5. FOR TWO STAGE OPERATION REMOVE W1 TO W2 WIRE JUMPER.

FACTORY WIRING

- LINE VOLTAGE
- LOW VOLTAGE
- OPTIONAL HIGH VOLTAGE

FIELD WIRING

- HIGH VOLTAGE
- LOW VOLTAGE

WIRE CODE

BK	BLACK
BL	BLUE
BR	BROWN
GR	GREEN
OR	ORANGE
PK	PINK
PU	PURPLE
RD	RED
WH	WHITE
YL	YELLOW
YL/PK	YELLOW WITH PINK STRIP
BL/PK	BLUE WITH PINK STRIP

THERMOSTAT FIELD WIRING ++

2 STAGE COOLING

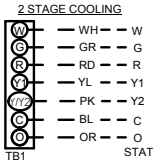

NO ECONOMIZER

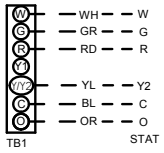

WITH ECONOMIZER OPTION

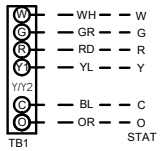

INSTALLER/SERVICEMAN

THE STATUS LIGHT ON THE FURNACE CONTROL MAY BE USED AS A GUIDE TO TROUBLESHOOTING THIS APPLIANCE. STATUS LIGHT CODES ARE AS FOLLOWS:

STATUS LIGHT	EQUIPMENT STATUS	CHECK
ON	NORMAL OPERATION	------
OFF	NO POWER OR INTERNAL CONTROL	CHECK INPUT POWER CHECK FUSE ON CONTROL REPLACE CONTROL
1 BLINK	IGNITION FAILURE OPEN ROLLOUT SWITCH OPEN AUX. LIMIT SWITCH	GAS FLOW GAS PRESSURE GAS VALVE FLAME SENSOR FLAME ROLLOUT BAD SWITCH AUX. LIMIT OPEN
2 BLINKS	PRESSURE SWITCH OPEN	CHECK PRESSURE SWITCH
3 BLINKS	PRESSURE SWITCH CLOSED WITHOUT INDUCER ON	CHECK PRESSURE SWITCH
4 BLINKS	OPEN LIMIT SWITCH	MAIN LIMIT OPEN BAD SWITCH
5 BLINKS	FALSE FLAME SENSED	STICKING GAS VALVE
6 BLINKS	COMPRESSOR OUTPUT DELAY	3 MIN. COMP. ANTI-CYCLE TIMER

460-575/3/60 0140L00551 REV B

WARNING

High Voltage: Disconnect all power before servicing or installing this unit. Multiple power sources may be present. Failure to do so may cause property damage, personal injury, or death.

Wiring is subject to change. Always refer to the wiring diagram or the unit for the most up-to-date wiring.

WIRING DIAGRAM — CPG120***3V***

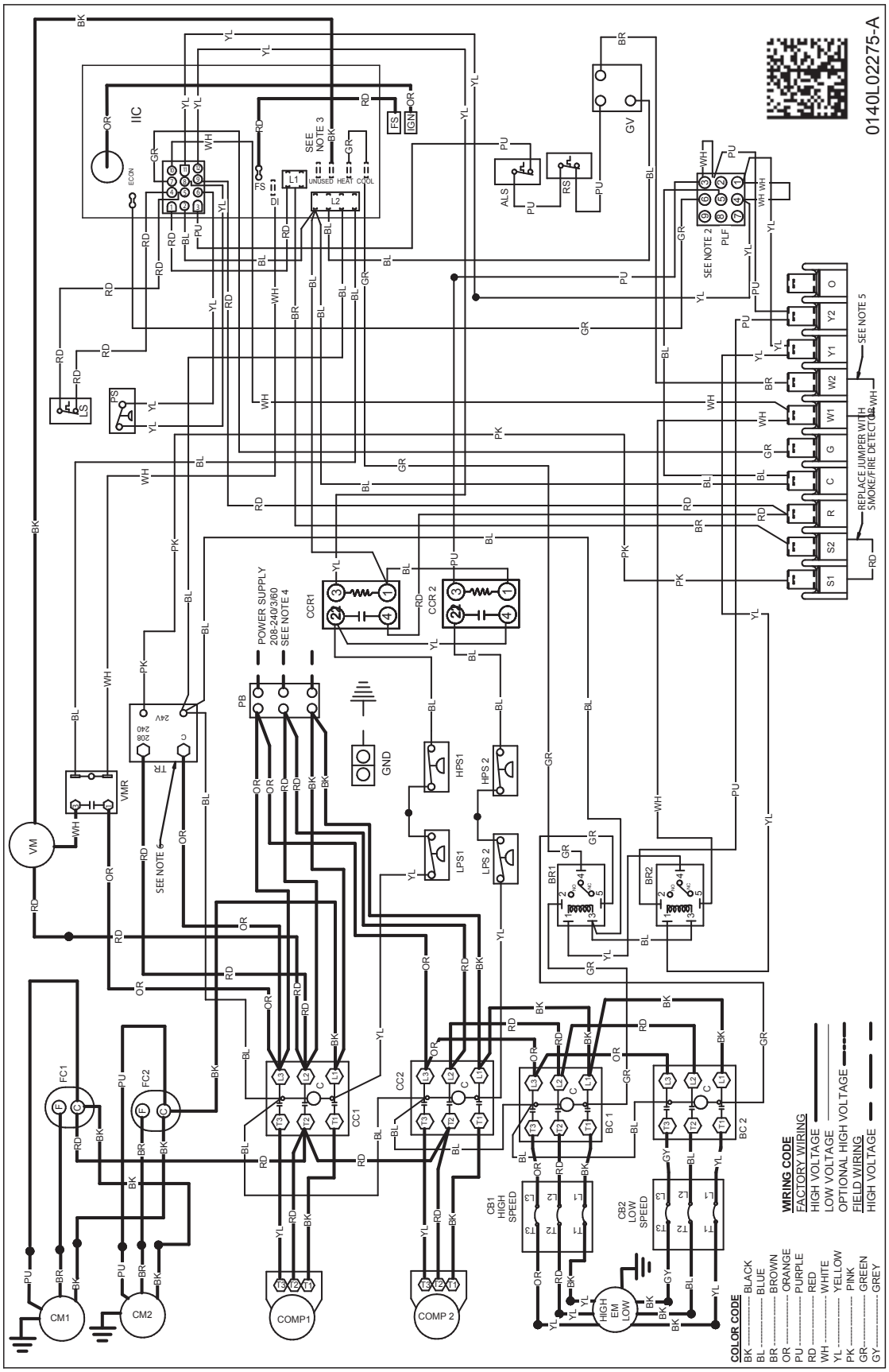

WARNING

High Voltage: Disconnect all power before servicing or installing this unit. Multiple power sources may be present. Failure to do so may cause property damage, personal injury, or death.

Wiring is subject to change. Always refer to the wiring diagram or the unit for the most up-to-date wiring.

WIRING DIAGRAM — CPG120***3V*** (CONT.)

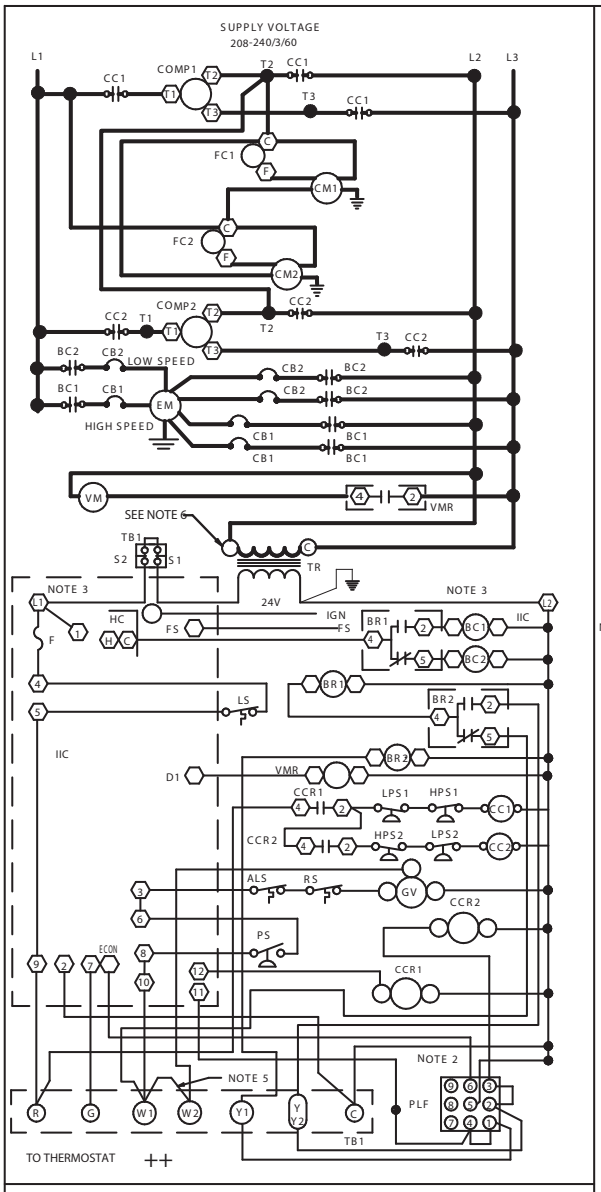

COMPONENT LEGEND

ALS	AUXILLARY LIMIT SWITCH
BC	BLOWER CONTACTOR
BR	BLOWER RELAY
CB	CIRCUIT BREAKER
CC	COMPRESSOR CONTACTOR
CCR	COMPRESSOR CONTACTOR RELAY
CM	CONDENSER MOTOR
COMP	COMPRESSOR
EM	EVAPORATOR MOTOR
F	FUSE
FC	FAN CAPACITOR
FS	FLAME SENSOR
GND	EQUIPMENT GROUND
GV	GAS VALVE
HPS	HIGH PRESSURE SWITCH
IBR	INDOOR BLOWER RELAY
IIC	INTEGRATED IGNITION CONTROL
IGN	IGNITOR
LPS	LOW PRESSURE SWITCH
LS	LIMIT SWITCH
PLF	FEMALE PLUG/CONNECTOR
PS	PRESSURE SWITCH
RS	ROLLOUT SWITCH
TB1	TERMINAL BLOCK (24V SIGNAL)
TR	TRANSFORMER
VM	VENT MOTOR
VMR	VENT MOTOR RELAY

NOTES

1. REPLACEMENT WIRE MUST BE THE SAME SIZE AND TYPE OF INSULATION AS ORIGINAL. (USE COPPER CONDUCTOR ONLY).
2. ACCESSORY ECONOMIZER PLUG ADJACENT TO BLOWER HOUSING IN RETURN AIR COMPARTMENT. REMOVE MALE PLUG AND ATTACH FEMALE PLUG TO THE ECONOMIZER ACCESSORY.
3. L1 AND L2 ON IIC CONTROL IS 24V INPUT.
4. USE COPPER CONDUCTORS ONLY. ++ USE NEC CLASS 2 WIRE.
5. FOR TWO STAGE OPERATION REMOVE W1 TO W2 JUMPER WIRE
6. MOVE WIRE(S) TO APPROPRIATE INPUT VOLTAGE TERMINAL ON TRANSFORMER.

SEE UNIT RATING PLATE FOR TYPE AND SIZE OF OVER CURRENT PROTECTION

FACTORY WIRING
- LINE VOLTAGE
- LOW VOLTAGE
- OPTIONAL HIGH VOLTAGE

FIELD WIRING
- HIGH VOLTAGE
- LOW VOLTAGE

WIRE CODE

BK	BLACK
BL	BLUE
BR	BROWN
GR	GREEN
OR	ORANGE
PK	PINK
PU	PURPLE
RD	RED
WH	WHITE
YL	YELLOW
YL /PK	YELLOW WITH PINK STRIP
BL /PK	BLUE WITH PINK STRIP

THERMOSTAT FIELD WIRING ++

2 STAGE COOLING

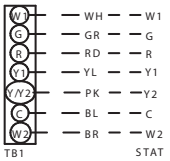

INSTALLER/SERVICEMAN

THE STATUS LIGHT ON THE FURNACE CONTROL MAY BE USED AS A GUIDE TO TROUBLESHOOTING THIS APPLIANCE. STATUS LIGHT CODES ARE AS FOLLOWS:

STATUS LIGHT	EQUIPMENT STATUS	CHECK
ON	NORMAL OPERATION	------
OFF	NO POWER OR INTERNAL CONTROL	CHECK INPUT POWER CHECK FUSE ON CONTROL REPLACE CONTROL
1 BLINK	IGNITION FAILURE OPEN ROLLOUT SWITCH OPEN AUX. LIMIT SWITCH	GAS FLOW GAS PRESSURE GAS VALVE FLAME SENSOR FLAME ROLLOUT BAD SWITCH AUX. LIMIT OPEN
2 BLINKS	PRESSURE SWITCH OPEN	CHECK PRESSURE SWITCH
3 BLINKS	PRESSURE SWITCH CLOSED WITHOUT INDUCER ON	CHECK PRESSURE SWITCH
4 BLINKS	OPEN LIMIT SWITCH	MAIN LIMIT OPEN BAD SWITCH
5 BLINKS	FALSE FLAME SENSED	STICKING GAS VALVE
6 BLINKS	COMPRESSOR OUTPUT DELAY	3 MIN. COMP. ANTI-CYCLE TIMER

208-240/3/60 0140L02281-A

WARNING

High Voltage: Disconnect all power before servicing or installing this unit. Multiple power sources may be present. Failure to do so may cause property damage, personal injury, or death.

Wiring is subject to change. Always refer to the wiring diagram or the unit for the most up-to-date wiring.

WIRING DIAGRAM — CPG120***4V / 7V***

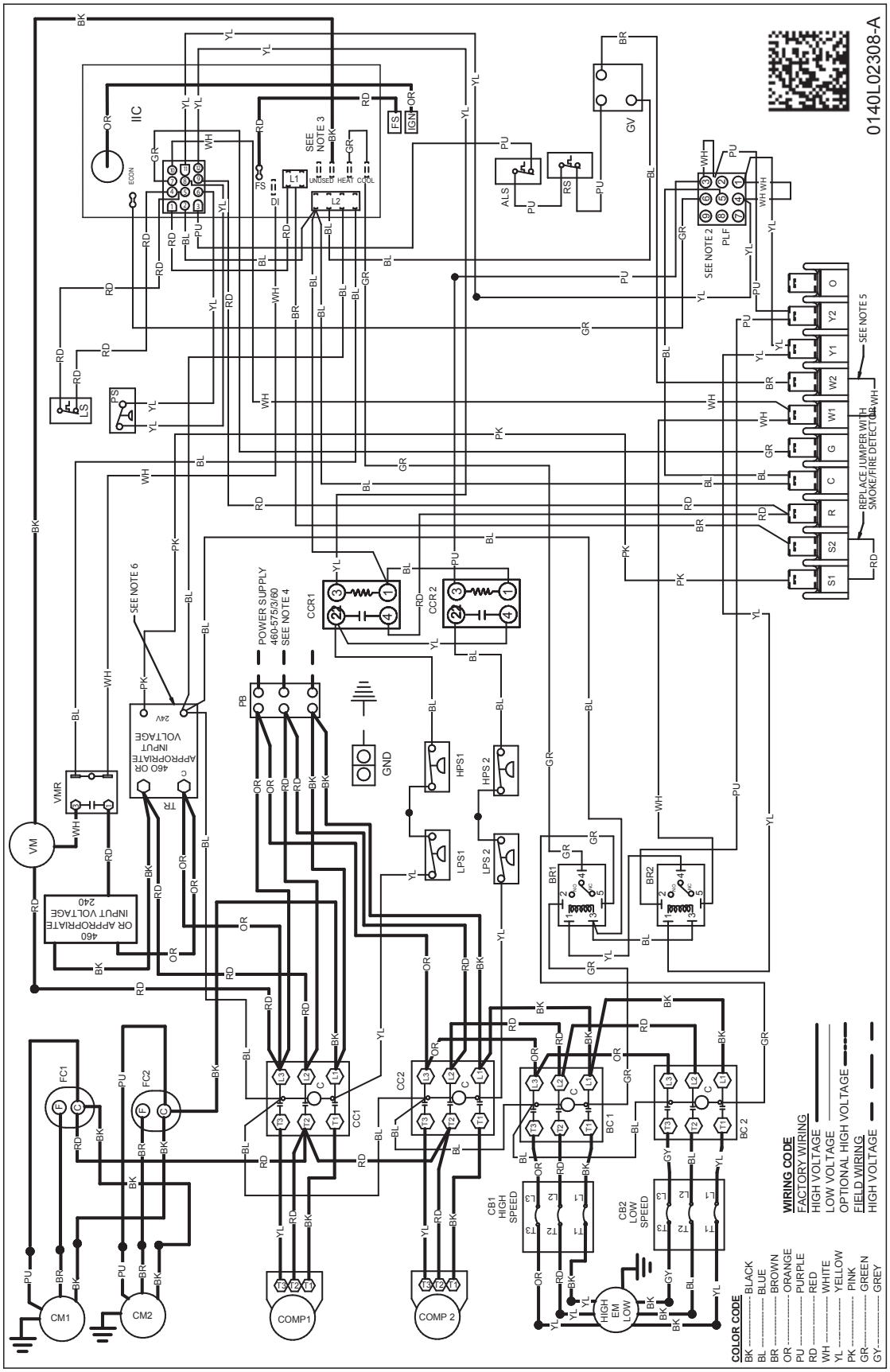

WARNING

High Voltage: Disconnect all power before servicing or installing this unit. Multiple power sources may be present. Failure to do so may cause property damage, personal injury, or death.

Wiring is subject to change. Always refer to the wiring diagram or the unit for the most up-to-date wiring.

WIRING DIAGRAM — CPG120***4V / 7V*** (CONT.)

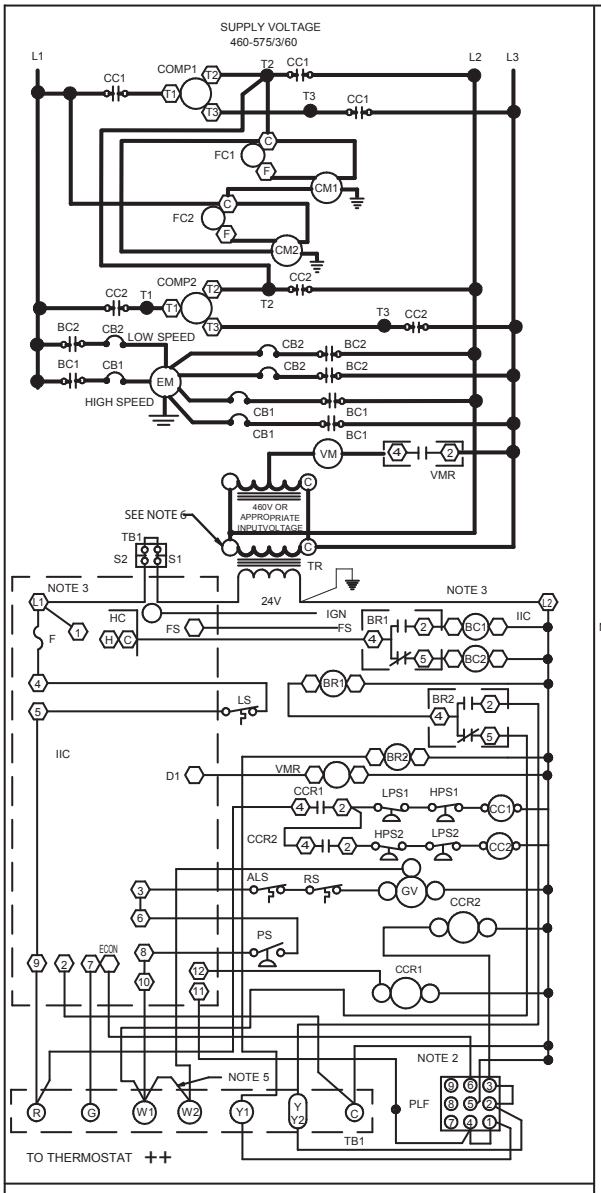

COMPONENT LEGEND

ALS	AUXILLARY LIMIT SWITCH
BC	BLOWER CONTACTOR
BR	BLOWER RELAY
CB	CIRCUIT BREAKER
CC	COMPRESSOR CONTACTOR
CCR	COMPRESSOR CONTACTOR RELAY
CM	CONDENSER MOTOR
COMP	COMPRESSOR
EM	EVAPORATOR MOTOR
F	FUSE
FC	FAN CAPACITOR
FS	FLAME SENSOR
GND	EQUIPMENT GROUND
GV	GAS VALVE
HPS	HIGH PRESSURE SWITCH
IBR	INDOOR BLOWER RELAY
IIC	INTEGRATED IGNITION CONTROL
IGN	IGNITOR
LPS	LOW PRESSURE SWITCH
LS	LIMIT SWITCH
PLF	FEMALE PLUG/CONNECTOR
PS	PRESSURE SWITCH
RS	ROLLOUT SWITCH
TB1	TERMINAL BLOCK (24V SIGNAL)
TR	TRANSFORMER
VM	VENT MOTOR
VMR	VENT MOTOR RELAY

NOTES

1. REPLACEMENT WIRE MUST BE THE SAME SIZE AND TYPE OF INSULATION AS ORIGINAL. (USE COPPER CONDUCTOR ONLY).
2. ACCESSORY ECONOMIZER PLUG ADJACENT TO BLOWER HOUSING IN RETURN AIR COMPARTMENT. REMOVE MALE PLUG AND ATTACH FEMALE PLUG TO THE ECONOMIZER ACCESSORY.
3. L1 AND L2 ON IIC CONTROL IS 24V INPUT.
4. USE COPPER CONDUCTORS ONLY. ++ USE NEC CLASS 2 WIRE.
5. FOR TWO STAGE OPERATION REMOVE W1 TO W2 JUMPER WIRE
6. MOVE WIRE(S) TO APPROPRIATE INPUT VOLTAGE TERMINAL ON TRANSFORMER.

SEE UNIT RATING PLATE FOR TYPE AND SIZE OF OVER CURRENT PROTECTION

460-575/3/60 0140L02307-A

FACTORY WIRING

LINE VOLTAGE
LOW VOLTAGE
OPTIONAL HIGH VOLTAGE

FIELD WIRING

HIGH VOLTAGE
LOW VOLTAGE

WIRE CODE

BK	BLACK
BL	BLUE
BR	BROWN
GR	GREEN
OR	ORANGE
PK	PINK
PU	PURPLE
RD	RED
WH	WHITE
YL	YELLOW
YL /PK	YELLOW WITH PINK STRIP
BL /PK	BLUE WITH PINK STRIP

THERMOSTAT FIELD WIRING ++

2 STAGE COOLING

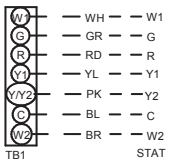

INSTALLER/SERVICEMAN

THE STATUS LIGHT ON THE FURNACE CONTROL MAY BE USED AS A GUIDE TO TROUBLESHOOTING THIS APPLIANCE. STATUS LIGHT CODES ARE AS FOLLOWS:

STATUS LIGHT	EQUIPMENT STATUS	CHECK
ON	NORMAL OPERATION	------
OFF	NO POWER OR INTERNAL CONTROL	CHECK INPUT POWER CHECK FUSE ON CONTROL REPLACE CONTROL
1 BLINK	IGNITION FAILURE OPEN ROLLOUT SWITCH OPEN AUX. LIMIT SWITCH	GAS FLOW GAS PRESSURE GAS VALVE FLAME SENSOR FLAME ROLLOUT BAD SWITCH AUX. LIMIT OPEN
2 BLINKS	PRESSURE SWITCH OPEN	CHECK PRESSURE SWITCH
3 BLINKS	PRESSURE SWITCH CLOSED WITHOUT INDUCER ON	CHECK PRESSURE SWITCH
4 BLINKS	OPEN LIMIT SWITCH	MAIN LIMIT OPEN BAD SWITCH
5 BLINKS	FALSE FLAME SENSED	STICKING GAS VALVE
6 BLINKS	COMPRESSOR OUTPUT DELAY	3 MIN. COMP. ANTI-CYCLE TIMER

High Voltage: Disconnect all power before servicing or installing this unit. Multiple power sources may be present. Failure to do so may cause property damage, personal injury, or death.

WARNING

Wiring is subject to change. Always refer to the wiring diagram or the unit for the most up-to-date wiring.

Accessories

Field Accessory Item #	Description	Fits Model Sizes	Field-Installed	Factory-Installed
14CURB90150	14" Roof Curb	7½-12½ tons	√	
25FD90150	25% Manual Fresh Air Damper	7½-12½ tons	√	
25MFD90150	25% Motorized Fresh Air Damper	7½-12½ tons	√	
DNBBS90150	Burglar Bar Sleeves: includes Supply & Return	7½-12½ tons	√	
CDK120	Concentric Duct Kit	10 tons	√	
CDK150	Concentric Duct Kit	12½ tons	√	
CDK90102	Concentric Duct Kit	7½-8½ tons	√	
HailGD02	Condenser Coil Hail Guard	7½-10 tons	√	√
HailGD05	Condenser Coil Hail Guard	12½ tons	√	√
	Convenience Outlet: Powered	All Models		√
	Convenience Outlet: Non Powered	All Models		√
	Disconnect Switch (non-fused)	All Models		√
DNECONGS90120	Downflow Economizer	7½-10 tons	√	√
DNECONGS150	Downflow Economizer	12½ tons	√	√
DNSQRRND90	Downflow Square-to-Round Adapter 20" Round	7½ tons	√	
HAKT36300	High-Altitude Kit	All Models	√	
HSKT090G [1]	High-Static Kit (230/460v)	7½ tons	√	
HSKT090 [1]	High-Static Kit (230/460v)	8½ tons	√	
HSKT120 [1]	High-Static Kit (230/460v)	10 tons	√	
HSKT150 [1]	High-Static Kit (230/460v)	12½ tons	√	
BRD3672	Horizontal Barometric Relief Damper (two required)	7½-12½ tons	√	
HZECONGS90150	Horizontal Economizer	7½-12½ tons	√	
GHRC-1	Hurricane Restraint Clip	All Models	√	
LAKT03	Low-Ambient Kit for units with serial numbers 0909 and above	7½ - 12½ tons	√	√
LAKT02	Low-Ambient Kit for units with serial number below 0909	7½ - 12½ tons	√	√
LPKT36150	LP Conversion Kit	7½-12½ tons	√	
PE901502	Power Exhaust 208/230 Volt	7½-12½ tons	√	
PE901504	Power Exhaust 460 Volt	7½-12½ tons	√	
	Smoke Detector	All Models		√
	Stainless Steel Heat Exchanger (Type 409)	All Models		√

[1] HSKT High-Static Kits are for use with standard single-speed belt-drive units only.

Goodman Manufacturing Company, L.P., reserves the right to discontinue, or change at any time, specifications or designs without notice or without incurring obligations. © 2013 • Goodman Manufacturing Company, L.P. • Houston, Texas • Printed in the USA.