Goodman®
Air Conditioning & Heating

# CPG Commercial

## 3- to 6-Ton Packaged Gas/Electric Units

## 13 SEER / 11.3 EER & 80% AFUE

**Cooling Capacity:**
**35,000 — 71,000 BTU/h**

**Heating Capacity:**
**56,000 — 112,000 BTU/h**

R-410A REFRIGERANT

### Standard Features

- R-410A chlorine-free refrigerant
- TuffTube™ tubular heat exchanger
- High-efficiency scroll compressor
- HIgh- and low-pressure switches
- Copper tube / aluminum fin coils
- Contactor with lugs
- High-capacity, steel-cased filter dryer
- 24-volt terminal strip
- Convertible
- Easy to service
- Built-in filter rack with standard 2” filters
- Bottom utility entry
- Complies with California NOx emissions standards
- AHRI Certified; ETL Listed

### Cabinet Features

- Heavy-gauge, galvanized-steel cabinet with UV-resistant powder-paint finish
- Full Perimeter Rail

### Contents


Nomenclature ..... 2
Product Specifications ..... 3
Airflow Data ..... 10
Expanded Cooling Data ..... 17
Dimensions ..... 25
Wiring Diagrams ..... 29
Accessories ..... 39


20 YEAR HEAT EXCHANGER LIMITED WARRANTY* | 5 YEAR PARTS LIMITED WARRANTY*

* Complete warranty details available from your local dealer or at www.goodmanmfg.com.

# Nomenclature

| C | P | G | 036 | 045 | 3 | B | X | X | X |
|---|---|---|---|---|---|---|---|---|---|
| 1 | 2 | 3 | 4,5,6 | 7,8,9 | 10 | 11 | 12 | 13 | 14 |

**Brand**

| | |
|---|---|
| C | Commercial |

**Configuration**

| | |
|---|---|
| P | Packaged Unit |

**Application**

| | |
|---|---|
| C | Cooling |
| G | Gas Heat |
| H | Heat Pump |

**Nominal Gross Cooling Capacity**

| | | | |
|---|---|---|---|
| 036 | 3 Tons | 102 | 8½ Tons |
| 048 | 4 Tons | 120 | 10 Tons |
| 060 | 5 Tons | 150 | 12½ tons |
| 072 | 6 Tons | 180 | 15 Tons |
| 090 | 7½ Tons | 240 | 20 Tons |

**Nominal Heating Capacity**

| CPG | | CPC/CPH (Factory-Installed Electric Heat) | | | |
|---|---|---|---|---|---|
| 045 | 45,000 BTU/h | XXX | No Heat | | |
| 090 | 90,000 BTU/h | 010 | 10 kW | 030 | 30 kW |
| 115 | 115,000 BTU/h | 015 | 15 kW | 031 | 30 kW |
| 140 | 140,000 BTU/h | 016 | 15 kW | 045 | 45 kW |
| 210 | 210,000 BTU/h | 018 | 18 kW | 046 | 45 kW |
| 350 | 350,000 BTU/h | 020 | 20 kW | 060 | 60 kW |
| 400 | 400,000 BTU/h | 025 | 25 kW | 075 | 75 kW |

**Voltage**

| | | | |
|---|---|---|---|
| 1 | 208V 1-Phase | 4 | 460V 3-Phase |
| 2 | 220/240V 1-Phase 50 Hz | 5 | 380/415V 3-Phase 50 Hz |
| 3 | 208/230V 3-Phase | 7 | 575V 3-Phase |

**Factory-Installed Options**

| | |
|---|---|
| X | No Options |
| A | Non-powered convenience outlet |
| B | Powered convenience outlet |
| C | Low-ambient kit |
| F | Non-powered convenience outlet; Low-ambient kit |
| M | Powered convenience outlet; Low-ambient kit |

**Factory-Installed Options**

| | |
|---|---|
| X | Standard Aluminized Heat Exchanger |
| A | Condenser Coil Hail Guard |
| B | Condenser Coil Hail Guard Treated Condenser Coil (UltraGold) |
| C | Condenser Coil Hail Guard Stainless Steel Heat Exchanger |
| D | Condenser Coil Hail Guard Treated Condenser Coil (UltraGold) Stainless-Steel Heat Exchanger |
| J | Treated Condenser Coil (UltraGold) |
| S | Stainless-Steel Heat Exchanger |
| T | Treated Condenser Coil (UltraGold) Stainless-Steel Heat Exchanger |

**Factory-Installed Options**

| | |
|---|---|
| X | No Options |
| A | Downflow Economizer |

**Supply Fan/Drive Type/Motors**

| | |
|---|---|
| B | Belt Drive |
| D | Direct Drive |
| H | High-Static Belt Drive (Factory-Installed) |

**Factory-Installed Options**

- Condenser Hail Guards: Louvered metal guards help protect the condenser coil from damage from hail and debris. Available as a factory-installed option on 3- to 12½-ton units. Hail guards are standard on 15- and 20-ton units.
- Stainless-Steel Heat Exchanger (CPG units only): A tubular heat exchanger made of 409-type stainless steel is installed in the unit.
- Ultra-Gold Condenser Coil: Offers increased corrosion resistance of the condenser coil.
- Low-Ambient Kit: Allows for cooling operation at lower outdoor temperatures. On the 3- to 6-ton units, cooling operation is extended from 60°F ambient temperature to 35°F outside air temperature. On 7½- to 20-ton units, cooling operation is extended from 35°F ambient temperature to 0°F outside air temperature.
- Economizers (Downflow): Based on air conditions, can provide outside air to cool the space.
- High Static Kits: Provides airflow in higher static applications.
- Electric Heat Kits (CPC and CPH units only): Available in all voltage options.
- Non-powered Convenience Outlet: A 120V, 15A, GFCI outlet makes it easier for technicians to service the unit once an electrician runs power to the outlet.
- Powered Convenience Outlet: A 120V, 15A, GFCI outlet powered with a transformer built into the unit.

# Product Specifications — CPG036 B Models

| | CPG036 0451DXXX | CPG036 0453DXXX | CPG036 0453BXXX | CPG036 0454BXXX |
|---|---|---|---|---|
| **Cooling Capacity** | | | | |
| Total BTU/h | 34,600 | 34,600 | 34,600 | 34,600 |
| Sensible BTU/h | 25,600 | 25,600 | 25,600 | 25,600 |
| SEER / EER | 13 / 11.3 | 13 / 11.3 | 13 / 11.3 | 13 / 11.3 |
| Decibels | 78 | 78 | 78 | 78 |
| AHRI Reference #s | 4385059 | 4385060 | 4385060 | 4385061 |
| **Heating Capacity** | | | | |
| Max. Input / Output kBTU/h | 46 / 36.8 | 46 / 36.8 | 46 / 36.8 | 46 / 36.8 |
| Steady State Efficiency (AFUE) | 80 | 80 | 80 | 80 |
| Temperature Rise Range (°F) | 25-55 | 25-55 | 25-55 | 25-55 |
| No. of Burners | 2 | 2 | 2 | 2 |
| **Evaporator Motor / Coil** | | | | |
| Motor Type | Direct Drive | Direct Drive | Belt Drive | Belt Drive |
| # of Wheels (D x W) | 1 (10” x 9”) | 1 (10” x 9”) | 1 (11” x 10”) | 1 (11” x 10”) |
| Indoor Nominal CFM | 1,200 | 1,200 | 1,200 | 1,200 |
| Motor Speed Tap (Cooling) | Low Speed | Low Speed | --- | --- |
| Indoor Motor FLA (Cooling) | 2.50 | 2.50 | 3.8 | 1.9 |
| Horsepower - RPM | ⅓ - 890 | ⅓ - 890 | 1.0 - 1725 | 1.0 - 1725 |
| Piston Size (Cooling) | 0.072 | 0.072 | 0.072 | 0.072 |
| Filter Size (“) | (1) 24 x 24 x 2 | (1) 24 x 24 x 2 | (1) 24 x 24 x 2 | (1) 24 x 24 x 2 |
| Drain Size (NPT) | ¾” | ¾” | ¾” | ¾” |
| R-410A Refrigerant Charge Cir #1(oz.) | 83 | 83 | 83 | 83 |
| Evaporator Coil Face Area ($ft^2$) | 5.4 | 5.4 | 5.4 | 5.4 |
| Rows Deep/ Fins per Inch | 3/16 | 3/16 | 3/16 | 3/16 |
| **Belt Drive Evap Fan Data** | | | | |
| # of Wheels (D x W) | --- | --- | 1 (11” x 10”) | 1 (11” x 10”) |
| Motor Sheave / Blower Sheave | --- | --- | 1VL40 X ⅝ / AK69 X 1 | |
| Belt | --- | --- | AX55 | AX55 |
| **Condenser Fan / Coil** | | | | |
| Quantity of Condenser Fan Motors | 1 | 1 | 1 | 1 |
| Horsepower - RPM | ¼ / 1,090 | ¼ / 1,090 | ¼ / 1,090 | ¼ - 890 |
| Fan Diameter/ # Fan Blades | 22/4 | 22/4 | 22/4 | 22/4 |
| Outdoor Nominal CFM | 3,800 | 3,800 | 3,800 | 3,800 |
| Face Area ($ft^2$) | 17.0 | 17.0 | 17.0 | 17.0 |
| Rows Deep/ Fins per Inch | 1 / 24 | 1 / 24 | 1 / 24 | 1 / 24 |
| **Compressor** | | | | |
| Quantity / Stage | 1 / Single | 1 / Single | 1 / Single | 1 / Single |
| Type | Scroll | Scroll | Scroll | Scroll |
| Compressor RLA / LRA | 16.7 / 79.0 | 10.4 / 73.0 | 10.4 / 73.0 | 5.8 / 38.0 |
| **Electrical Data** | | | | |
| Voltage-Phase-Frequency | 208/230-1-60 | 208/230-3-60 | 208/230-3-60 | 460-3-60 |
| Indoor Blower HP / FLA | ⅓ / 2.5 | ⅓ / 2.5 | 1 / 3.8 | 1 / 1.9 |
| Outdoor Fan HP / FLA | ¼ / 1.4 | ¼ / 1.4 | ¼ / 1.4 | ¼ / 0.8 |
| Total Unit Amps | 20.57 | 14.35 | 15.65 | 8.47 |
| Min. Circuit Ampacity[1] | 25 | 17 | 18 | 10 |
| Max. Overcurrent Protection (amps)[2] | 40 | 25 | 25 | 15 |
| Power Supply Conduit Hole / Knockout | 1.125 | 1.125 | 1.125 | 1.125 |
| Low-Voltage Conduit Hole | ½” | ½” | ½” | ½” |
| **Operating Weight (lbs)** | 525 | 525 | 525 | 525 |
| **Ship Weight (lbs)** | 550 | 550 | 550 | 550 |

[1] Wire size should be determined in accordance with National Electrical Codes. Extensive wire runs will require larger wire sizes.
[2] May use fuses or HACR-type circuit breakers of the same size as noted.
Note: Always check the S&R plate for electrical data on the unit being installed.

# Product Specifications — CPG036 B Models (cont.)

| | CPG036 0901DXXX | CPG036 0903DXXX | CPG036 0903BXXX | CPG036 0904BXXX | CPG036 0907BXXX |
|---|---|---|---|---|---|
| **Cooling Capacity** | | | | | |
| Total BTU/h | 34,600 | 34,600 | 34,600 | 34,600 | 35,000 |
| Sensible BTU/h | 25,600 | 25,600 | 25,600 | 25,600 | 25,900 |
| SEER / EER | 13 / 11.3 | 13 / 11.3 | 13 / 11.3 | 13 / 11.3 | 13 / 11.3 |
| Decibels | 78 | 78 | 78 | 78 | 78 |
| AHRI #s | 4385059 | 4385060 | 4385060 | 4385061 | 4397607 |
| **Heating Capacity** | | | | | |
| Hi. Input / Output BTU/h | 92 / 74 | 92 / 74 | 92 / 74 | 92 / 74 | 92 / 74 |
| Low. Input / Output kBTU/h | 69 / 55 | 69 / 55 | 69 / 55 | 69 / 55 | 69 / 55 |
| Steady State Efficiency (AFUE) | 80 | 80 | 80 | 80 | 80 |
| Temperature Rise Range (°F) Hi / Low | 40-70 / 30-60 | 40-70 / 30-60 | 40-70 / 30-60 | 40-70 / 30-60 | 40-70 / 30-60 |
| No. of Burners | 4 | 4 | 4 | 4 | 3 |
| **Evaporator Motor / Coil** | | | | | |
| Motor Type | Direct Drive | Direct Drive | Belt Drive | Belt Drive | Belt Drive |
| # of Wheels (D x W) | 1 (10” x 9”) | 1 (10” x 9”) | 1 (11” x 10”) | 1 (11” x 10”) | 1 (11” x 10”) |
| Indoor Nominal CFM | 1,200 | 1,200 | 1,200 | 1,200 | 1,200 |
| Motor Speed Tap (Cooling) | Low Speed | Low Speed | --- | --- | --- |
| Indoor Motor FLA (Cooling) | 2.50 | 2.50 | 3.8 | 1.9 | 1.9 |
| Horsepower - RPM | ⅓ - 890 | ⅓ - 890 | 1.0 - 1,725 | 1.0 - 1,725 | 1.0 - 1,725 |
| Piston Size (Cooling) | 0.068 | 0.068 | 0.068 | 0.068 | 0.068 |
| Filter Size (“) | (1) 24 x 24 x 2 | (1) 24 x 24 x 2 | (1) 24 x 24 x 2 | (1) 24 x 24 x 2 | (1) 24 x 24 x 2 |
| Drain Size (NPT) | ¾” | ¾” | ¾” | ¾” | ¾” |
| R-410A Refrigerant Charge Cir #1(oz.) | 90 | 83 | 83 | 90 | 90 |
| Evaporator Coil Face Area (ft²) | 5.4 | 5.4 | 5.4 | 5.4 | 5.4 |
| Rows Deep / Fins per Inch | 3 / 16 | 3 / 16 | 3 / 16 | 3 / 16 | 3 / 16 |
| **Belt Drive Evap Fan Data** | | | | | |
| # of Wheels (D x W) | --- | --- | 1 (11” x 10”) | 1 (11” x 10”) | 1 (11” x 10”) |
| Motor Sheave / Blower Sheave | --- | --- | 1VL40 X ⅝ / AK69 X 1 | | |
| Belt | --- | --- | AX55 | AX55 | AX55 |
| **Condenser Fan / Coil** | | | | | |
| Quantity of Condenser Fan Motors | 1 | 1 | 1 | 1 | 1 |
| Horsepower - RPM | ¼ / 1,090 | ¼ / 1,090 | ¼ / 1,090 | ¼ - 890 | ¼ - 1,075 |
| Fan Diameter/ # Fan Blades | 22 / 4 | 22 / 4 | 22 / 4 | 22 / 4 | 22 / 4 |
| Outdoor Nominal CFM | 3,800 | 3,800 | 3,800 | 3,800 | 3,800 |
| Face Area (ft²) | 18.0 | 18.0 | 18 | 18 | 13 |
| Rows Deep/ Fins per Inch | 1 / 22 | 1 / 22 | 1 / 22 | 1 / 22 | 2 / 16 |
| **Compressor** | | | | | |
| Quantity / Stage | 1 / Single | 1 / Single | 1 / Single | 1 / Single | 1 / Single |
| Type | Scroll | Scroll | Scroll | Scroll | Scroll |
| Compressor RLA / LRA | 16.7 / 79.0 | 10.4 / 73.0 | 10.4 / 73.0 | 5.8 / 38.0 | 3.8 / 36.5 |
| **Electrical Data** | | | | | |
| Voltage-Phase-Frequency | 208/230-1-60 | 208/230-3-60 | 208/230-3-60 | 460-3-60 | 575-3-60 |
| Indoor Blower HP / FLA | ⅓ / 2.5 | ⅓ / 2.5 | 1 / 3.8 | 1 / 1.9 | 1 / 1.9 |
| Outdoor Fan HP / FLA | ¼ / 1.4 | ¼ / 1.4 | ¼ / 1.4 | ¼ / 0.8 | ¼ / 0.8 |
| Total Unit Amps | 20.57 | 14.35 | 15.65 | 8.47 | 6.68 |
| Min. Circuit Ampacity[1] | 25 | 17 | 18 | 10 | 8 |
| Max. Overcurrent Protection (amps)[2] | 40 | 25 | 25 | 15 | 15 |
| Power Supply Conduit Hole | 1.125 | 1.125 | 1.125 | 1.125 | 1.125 |
| Low-Voltage Conduit Hole | ½” | ½” | ½” | ½” | ½” |
| **Operating Weight (lbs)** | 535 | 535 | 535 | 535 | 535 |
| **Ship Weight (lbs)** | 560 | 560 | 560 | 560 | 560 |

[1] Wire size should be determined in accordance with National Electrical Codes. Extensive wire runs will require larger wire sizes.
[2] May use fuses or HACR-type circuit breakers of the same size as noted.
Note: Always check the S&R plate for electrical data on the unit being installed.

# Product Specifications — CPG048 B Models

| | CPG048 0901DXXX | CPG048 0903DXXX | CPG048 0903BXXX | CPG048 0904BXXX |
|---|---|---|---|---|
| **Cooling Capacity** | | | | |
| Total BTU/h | 45,500 | 45,500 | 45,500 | 45,500 |
| Sensible BTU/h | 35,000 | 35,000 | 35,000 | 35,000 |
| SEER / EER | 13.0 / 11.3 | 13.0 / 11.3 | 13.0 / 11.3 | 13.0 / 11.3 |
| Decibels | 78 | 78 | 78 | 78 |
| AHRI Reference #s | 4385062 | 4385063 | 4385063 | 4385064 |
| Heating Capacity | | | | |
| Max. Input /Output kBTU/h | 92 / 74 | 92 / 74 | 92 / 74 | 92 / 74 |
| Low Input /Output kBTU/h | 69 / 55 | 69 / 55 | 69 / 55 | 69 / 55 |
| Steady State Efficiency (AFUE) | 80 | 80 | 80 | 80 |
| Temperature Rise Range (°F) Hi / Low | 30-60 / 15-45 | 30-60 / 15-45 | 30-60 / 15-45 | 30-60 / 15-45 |
| No. of Burners | 4 | 4 | 4 | 4 |
| **Evaporator Motor / Coil** | | | | |
| Motor Type | Direct Drive | Direct Drive | Belt Drive | Belt Drive |
| Indoor Nominal CFM | 1,600 | 1,600 | 1,600 | 1,600 |
| Motor Speed Tap (Cooling) | Medium | Medium | --- | --- |
| Indoor Motor FLA (Cooling) | 2.87 | 2.87 | 3.8 | 1.9 |
| Horsepower - RPM | ½ - 1,000 | ½ - 1,000 | 1.0 / 1,725 | 1.0 / 1,725 |
| Piston Size (Cooling) | 0.076 | 0.076 | 0.076 | 0.076 |
| Filter Size (#) | 14 x 20 x 2 (4) | 14 x 20 x 2 (4) | 14 x 20 x 2 (4) | 14 x 20 x 2 (4) |
| Drain Size (NPT) | ¾” | ¾” | ¾” | ¾” |
| R-410A Refrigerant Charge (oz.) | 103 | 103 | 105 | 103 |
| Evaporator Coil Face Area ($ft^2$) | 7.0 | 7.0 | 7.0 | 7.0 |
| Rows Deep / Fins per Inch | 4 / 16 | 4 / 16 | 4 / 16 | 4 / 16 |
| **Belt Drive Evap Fan Data** | | | | |
| # of Wheels (D” x W”) | --- | --- | (1) 11 x 10 | (1) 11 x 10 |
| Motor Sheave / Blower Sheave | --- | --- | VL44 X ⅝ / AK66 X 1 | |
| Belt | --- | --- | AX55 | AX55 |
| **Condenser Fan / Coil** | | | | |
| Quantity of Condenser Fan Motors | 1 | 1 | 1 | 1 |
| Horsepower - RPM | ¼ - 1,090 | ¼ - 1,090 | ¼ - 1,090 | ¼ - 890 |
| Fan Diameter / # Fan Blades | 22 / 4 | 22 / 4 | 22 / 4 | 22 / 4 |
| Outdoor Nominal CFM | 3,800 | 3,800 | 3,800 | 3,800 |
| Face Area ($ft^2$) | 17.0 | 17.0 | 17.0 | 17.0 |
| Rows Deep / Fins per Inch | 1 / 24 | 1 / 24 | 1 / 24 | 1 / 24 |
| **Compressor** | | | | |
| Quantity / Stage | 1 / Single | 1 / Single | 1 / Single | 1 / Single |
| Type | Scroll | Scroll | Scroll | Scroll |
| Compressor RLA / LRA | 19.9 / 109 | 13.1 / 83.1 | 13.1 / 83.1 | 6.1 / 41 |
| **Electrical Data** | | | | |
| Voltage-Phase-Frequency | 208/230-1-60 | 208/230-3-60 | 208/230-3-60 | 460-3-60 |
| Outdoor Fan FLA | 1.40 | 1.40 | 1.40 | 0.80 |
| Total Unit Amps | 24.1 | 17.4 | 18.3 | 8.8 |
| Min. Circuit Ampacity[1] | 29 | 21 | 22 | 10 |
| Max. Overcurrent Protection (amps)[2] | 45 | 30 | 30 | 15 |
| Power Supply Conduit Hole | 1.125 | 1.125 | 1.125 | 1.125 |
| Low-Voltage Conduit Hole | ½” | ½” | ½” | ½” |
| **Operating Weight (lbs)** | 575 | 575 | 575 | 575 |
| **Ship Weight (lbs)** | 600 | 600 | 600 | 600 |

[1] Wire size should be determined in accordance with National Electrical Codes. Extensive wire runs will require larger wire sizes.
[2] May use fuses or HACR-type circuit breakers of the same size as noted.
Note: Always check the S&R plate for electrical data on the unit being installed.

# Product Specifications — CPG048 B Models (cont.)

| | CPG048 1151DXXX | CPG048 1153DXXX | CPG048 1153BXXX | CPG048 1154BXXX | CPG048 1157BXXX |
|---|---|---|---|---|---|
| **Cooling Capacity** | | | | | |
| Total BTU/h | 45,500 | 45,500 | 45,500 | 45,500 | 45,500 |
| Sensible BTU/h | 35,000 | 35,000 | 35,000 | 35,000 | 35,000 |
| SEER / EER | 13.0 / 11.3 | 13.0 / 11.3 | 13.0 / 11.3 | 13.0 / 11.3 | 13.0 / 11.3 |
| Decibels | 78 | 78 | 78 | 78 | 78 |
| AHRI Reference #s | 4385062 | 4385063 | 4385063 | 4385064 | 4397608 |
| **Heating Capacity** | | | | | |
| Max. Input /Output kBTU/h | 115 / 92 | 115 / 92 | 115 / 92 | 115 / 92 | 115 / 92 |
| Low Input /Output kBTU/h | 86.25 / 69 | 86.25 / 69 | 86.25 / 69 | 86.25 / 69 | 86.25 / 69 |
| Steady State Efficiency (AFUE) | 80 | 80 | 80 | 80 | 80 |
| Temperature Rise Range (°F) Hi / Low | 40-70 / 25-55 | 40-70 / 25-55 | 40-70 / 25-55 | 40-70 / 25-55 | 40-70 / 25-55 |
| No. of Burners | 5 | 5 | 5 | 5 | 5 |
| **Evaporator Motor / Coil** | | | | | |
| Motor Type | Direct Drive | Direct Drive | Belt Drive | Belt Drive | Belt Drive |
| Indoor Nominal CFM | 1,600 | 1,600 | 1,600 | 1,600 | 1,600 |
| Motor Speed Tap (Cooling) | Medium | Medium | -- | -- | -- |
| Indoor Motor FLA (Cooling) | 2.87 | 2.87 | 3.8 | 1.9 | 2.3 |
| Horsepower - RPM | ½ - 1,000 | ½ - 1,000 | 1.0 / 1,725 | 1.0 / 1,725 | 1½ / 1,725 |
| Piston Size (Cooling) | 0.076 | 0.076 | 0.076 | 0.076 | 0.076 |
| Filter Size (#) | 14 x 20 x 2 (4) | 14 x 20 x 2 (4) | 14 x 20 x 2 (4) | 14 x 20 x 2 (4) | 14 x 20 x 2 (4) |
| Drain Size (NPT) | ¾" | ¾" | ¾" | ¾" | ¾" |
| R-410A Refrigerant Charge Cir #1(oz.) | 103 | 103 | 103 | 103 | 105 |
| Evaporator Coil Face Area ($ft^2$) | 7.0 | 7.0 | 7.0 | 7.0 | 7.0 |
| Rows Deep / Fins per Inch | 4 / 16 | 4 / 16 | 4 / 16 | 4 / 16 | 4 / 16 |
| **Belt Drive Evap Fan Data** | | | | | |
| # of Wheels (D" x W") | --- | --- | (1) 11 x 10 | (1) 11 x 10 | (1) 11 x 10 |
| Motor Sheave / Blower Sheave | --- | --- | VL44 X ⅝ / AK66 X 1 | | |
| Belt | --- | --- | AX55 | AX55 | AX55 |
| **Condenser Fan / Coil** | | | | | |
| Quantity of Condenser Fan Motors | 1 | 1 | 1 | 1 | 1 |
| Horsepower - RPM | ¼ - 1,090 | ¼ - 1,090 | ¼ - 1,090 | ¼ - 890 | ¼ - 1,075 |
| Fan Diameter / # Fan Blades | 22 / 4 | 22 / 4 | 22 / 4 | 22 / 4 | 22 / 4 |
| Outdoor Nominal CFM | 3,800 | 3,800 | 3,800 | 3,800 | 3,800 |
| Face Area ($ft^2$) | 17.0 | 17.0 | 17.0 | 17.0 | 17.0 |
| Rows Deep/ Fins per Inch | 1 / 24 | 1 / 24 | 1 / 24 | 1 / 24 | 1 / 24 |
| **Compressor** | | | | | |
| Quantity / Stage | 1 / Single | 1 / Single | 1 / Single | 1 / Single | 1 / Single |
| Type | Scroll | Scroll | Scroll | Scroll | Scroll |
| Compressor RLA / LRA | 19.9 / 109 | 13.1 / 83.1 | 13.1 / 83.1 | 6.1 / 41 | 4.4 / 33 |
| **Electrical Data** | | | | | |
| Voltage-Phase-Frequency | 208/230-1-60 | 208/230-3-60 | 208/230-3-60 | 460-3-60 | 575-3-60 |
| Outdoor Fan FLA | 1.40 | 1.40 | 1.40 | 0.80 | 0.60 |
| Total Unit Amps | 24.1 | 17.4 | 18.3 | 8.8 | 7.3 |
| Min. Circuit Ampacity[1] | 29 | 21 | 22 | 10 | 8 |
| Max. Overcurrent Protection (amps)[2] | 45 | 30 | 30 | 15 | 15 |
| Power Supply Conduit Hole | 1.125 | 1.125 | 1.125 | 1.125 | 1.125 |
| Low-Voltage Conduit Hole | ½" | ½" | ½" | ½" | ½" |
| **Operating Weight (lbs)** | 580 | 580 | 580 | 580 | 580 |
| **Ship Weight (lbs)** | 605 | 605 | 605 | 605 | 605 |

[1] Wire size should be determined in accordance with National Electrical Codes. Extensive wire runs will require larger wire sizes.
[2] May use fuses or HACR-type circuit breakers of the same size as noted.
Note: Always check the S&R plate for electrical data on the unit being installed.

# Product Specifications — CPG060 B Models

| | CPG060 0901DXXX | CPG060 0903DXXX | CPG060 0903BXXX | CPG060 0904BXXX |
|---|---|---|---|---|
| **Cooling Capacity** | | | | |
| Total BTU/h | 59,500 | 59,500 | 59,500 | 59,500 |
| Sensible BTU/h | 43,200 | 43,200 | 43,200 | 43,200 |
| SEER / EER | 13 / 11.3 | 13 / 11.3 | 13 / 11.3 | 13 / 11.3 |
| Decibels | 78 | 78 | 78 | 78 |
| ARI Reference Nos. | 4385065 | 4385066 | 4385066 | 4385067 |
| **Gas Heating Capacity** | | | | |
| Max. Input /Output kBTU/h | 92 / 74 | 92 / 74 | 92 / 74 | 92 / 74 |
| Low Input /Output kBTU/h | 69 / 55 | 69 / 55 | 69 / 55 | 69 / 55 |
| Steady State Efficiency (AFUE) | 80 | 80 | 80 | 80 |
| Temperature Rise Range (°F) | 20-50 / 15-45 | 20-50 / 15-45 | 20-50 / 15-45 | 20-50 / 15-45 |
| No. of Burners | 4 | 4 | 4 | 4 |
| **Evaporator Motor / Coil** | | | | |
| Motor Type | Direct | Direct | Belt | Belt |
| Indoor Nominal CFM | 2,000 | 2,000 | 2,000 | 2,000 |
| Piston Size (Cooling) | 0.086 | 0.086 | 0.086 | 0.086 |
| Filter Size (#) | 14 x 20 x 2 (4) | 14 x 20 x 2 (4) | 14 x 20 x 2 (4) | 14 x 20 x 2 (4) |
| Drain Size (NPT) | ¾” | ¾” | ¾” | ¾” |
| R-410A Refrigerant Charge (oz.) | 162 | 162 | 162 | 165 |
| Face Area (ft²) | 7.8 | 7.8 | 7.8 | 7.8 |
| Rows Deep/ Fins per Inch | 4 / 16 | 4 / 16 | 4 / 16 | 4 / 16 |
| Tube Diameter - Material | 5/16 - Copper | 5/16 - Copper | 5/16 - Copper | 5/16 - Copper |
| **Belt Drive Evap Fan Data** | | | | |
| # of Wheels (D x W) | --- | --- | 1 (11” x 10”) | 1 (11” x 10”) |
| Motor Sheave / Blower Sheave | --- | --- | VL44 X ⅝ / AK61 X 1 | |
| Belt | --- | --- | AX53 | AX53 |
| **Condenser Fan / Coil** | | | | |
| Horsepower / RPM | ¼ / 1,090 | ¼ / 1,090 | ¼ / 1,090 | ¼ / 1,090 |
| Fan Diameter/ # Fan Blades | 22 / 4 | 22 / 4 | 22 / 4 | 22 / 4 |
| Outdoor Nominal CFM | 3,800 | 3,800 | 3,800 | 3,800 |
| Face Area (ft²) | 17.0 | 17.0 | 17.0 | 17.0 |
| Rows Deep/ Fins per Inch | 2 / 18 | 2 / 18 | 2 / 18 | 2 / 18 |
| Tube Diameter - Material | 5/16 - Copper | 5/16 - Copper | 5/16 - Copper | 5/16 - Copper |
| **Compressor** | | | | |
| Quantity / Stage | 1 / Single | 1 / Single | 1 / Single | 1 / Single |
| Type | Scroll | Scroll | Scroll | Scroll |
| Compressor RLA / LRA | 26.4 / 134 | 16 / 110 | 16 / 110 | 7.8 / 52 |
| **Electrical Data** | | | | |
| Voltage-Phase-Frequency | 208/230-1-60 | 208/230-3-60 | 208/230-3-60 | 460-3-60 |
| Indoor Blower HP / FLA )STD Static) | 1.0 / 7.6 | 1.0 / 7.6 | 1.0 / 3.8 | 1.0 / 1.9 |
| Indoor Blower LRA | ---- | ---- | 24 | 13 |
| Outdoor Fan HP / FLA | ¼ / 1.40 | ¼ / 1.40 | ¼ / 1.40 | ¼ / 0.8 |
| Min. Circuit Ampacity[1] | 42 | 29 | 25 | 13 |
| Max. Overcurrent Protection (amps)[2] | 60 | 45 | 40 | 20 |
| Power Supply Conduit Hole | 1.125 | 1.125 | 1.125 | 1.125 |
| Low-Voltage Conduit Hole | ½” | ½” | ½” | ½” |
| **Operating Weight (lbs)** | 620 | 620 | 620 | 620 |
| **Ship Weight (lbs)** | 645 | 645 | 645 | 645 |

[1] Wire size should be determined in accordance with National Electrical Codes. Extensive wire runs will require larger wire sizes.
[2] May use fuses or HACR-type circuit breakers of the same size as noted.
Note: Always check the S&R plate for electrical data on the unit being installed.

# Product Specifications — CPG060 B Models (cont.)

| | CPG060 1401DXXX | CPG060 1403DXXX | CPG060 1403BXXX | CPG060 1404BXXX | CPG060 1407BXXX |
|---|---|---|---|---|---|
| **Cooling Capacity** | | | | | |
| Total BTU/h | 59,500 | 59,500 | 59,500 | 59,500 | 59,500 |
| Sensible BTU/h | 43,200 | 43,200 | 43,200 | 43,200 | 43,200 |
| SEER / EER | 13 / 11.3 | 13 / 11.3 | 13 / 11.3 | 13 / 11.3 | 13 / 11.3 |
| Decibels | 78 | 78 | 78 | 78 | 78 |
| AHRI Nos. | 4385065 | 4385066 | 4385066 | 4385067 | 4397609 |
| **Gas Heating Capacity** | | | | | |
| Max. Input / Output kBTU/h | 138 / 110.4 | 138 / 110.4 | 138 / 110.4 | 138 / 110.4 | 138 / 110.4 |
| Low. Input / Output kBTU/h | 103 / 83 | 103 / 83 | 103 / 83 | 103 / 83 | 103 / 83 |
| Steady State Efficiency (AFUE) | 80 | 80 | 80 | 80 | 80 |
| Temperature Rise Range (°F) Hi / Low | 35-65 / 25-55 | 35-65 / 25-55 | 35-65 / 25-55 | 35-65 / 25-55 | 35-65 / 25-55 |
| No. of Burners | 6 | 6 | 6 | 6 | 6 |
| **Evaporator Motor / Coil** | | | | | |
| Motor Type | Direct | Direct | Belt | Belt | Belt |
| Indoor Nominal CFM | 2,000 | 2,000 | 2,000 | 2,000 | 2,000 |
| Piston Size (Cooling) | 0.086 | 0.086 | 0.086 | 0.086 | 0.086 |
| Filter Size (#) | 14 x 20 x 2 (4) | 14 x 20 x 2 (4) | 14 x 20 x 2 (4) | 14 x 20 x 2 (4) | 14 x 20 x 2 (4) |
| Drain Size (NPT) | ¾” | ¾” | ¾” | ¾” | ¾" |
| R-410A Refrigerant Charge (oz.) | 162 | 162 | 162 | 162 | 162 |
| Face Area (ft²) | 7.8 | 7.8 | 7.8 | 7.8 | 7.8 |
| Rows Deep/ Fins per Inch | 4 / 16 | 4 / 16 | 4 / 16 | 4 / 16 | 4 / 16 |
| Tube Diameter - Material | 5/16 - Copper | 5/16 - Copper | 5/16 - Copper | 5/16 - Copper | 5/16 - Copper |
| **Belt Drive Evap Fan Data** | | | | | |
| # of Wheels (D x W) | --- | --- | 1 (11” x 10”) | 1 (11” x 10”) | 1 (11" x 10") |
| Motor Sheave / Blower Sheave | --- | --- | VL44 X ⅝ / AK61 X 1 | | |
| Belt | --- | --- | AX53 | AX53 | AX53 |
| **Condenser Fan / Coil** | | | | | |
| Horsepower / RPM | ¼ / 1,090 | ¼ / 1,090 | ¼ / 1,090 | ¼ / 1,090 | ¼ / 1,075 |
| Fan Diameter/ # Fan Blades | 22 / 4 | 22 / 4 | 22 / 4 | 22 / 4 | 22 / 1 |
| Outdoor Nominal CFM | 3,800 | 3,800 | 3,800 | 3,800 | 3,800 |
| Face Area (ft²) | 17.0 | 17.0 | 17.0 | 17.0 | 17½ |
| Rows Deep/ Fins per Inch | 2 / 18 | 2 / 18 | 2 / 18 | 2 / 18 | 2 / 18 |
| Tube Diameter - Material | 5/16 - Copper | 5/16 - Copper | 5/16 - Copper | 5/16 - Copper | 5/16 - Copper |
| **Compressor** | | | | | |
| Quantity / Stage | 1 / Single | 1 / Single | 1 / Single | 1 / Single | 1 / Single |
| Type | Scroll | Scroll | Scroll | Scroll | Scroll |
| Compressor RLA / LRA | 26.4 / 134 | 16 / 110 | 16 / 110 | 7.8 / 52 | 5.7 / 38.9 |
| **Electrical Data** | | | | | |
| Voltage-Phase-Frequency | 208/230-1-60 | 208/230-3-60 | 208/230-3-60 | 460-3-60 | 575-3-60 |
| Indoor Blower HP / FLA (STD Static) | 1.0 / 7.6 | 1.0 / 7.6 | 1.0 / 3.8 | 1.0 / 1.9 | 1.5 / 2.3 |
| Indoor Blower LRA | ---- | ---- | 24 | 13 | 12 |
| Outdoor Fan HP / FLA | ¼ / 1.40 | ¼ / 1.40 | ¼ / 1.40 | ¼ / 0.8 | ¼ / 0.6 |
| Min. Circuit Ampacity[1] | 42 | 29 | 25 | 12 | 10 |
| Max. Overcurrent Protection (amps)[2] | 60 | 40 | 40 | 20 | 15 |
| Power Supply Conduit Hole | 1.125 | 1.125 | 1.125 | 1.125 | 1.125 |
| Low-Voltage Conduit Hole | ½” | ½” | ½” | ½” | ½" |
| **Operating Weight (lbs)** | 630 | 630 | 630 | 630 | 630 |
| **Ship Weight (lbs)** | 655 | 655 | 655 | 655 | 655 |

[1] Wire size should be determined in accordance with National Electrical Codes. Extensive wire runs will require larger wire sizes.
[2] May use fuses or HACR-type circuit breakers of the same size as noted.
Note: Always check the S&R plate for electrical data on the unit being installed.

# Product Specifications — CPG072 B Models

| | CPG072 1403BXXX | CPG072 1404BXXX | CPG072 1407BXXX |
|---|---|---|---|
| **Cooling Capacity** | | | |
| Total BTU/h | 71,000 | 71,000 | 71,000 |
| Sensible BTU/h | 48,280 | 48,280 | 48,280 |
| EER | 11.1 | 11.1 | 11.1 |
| Decibels | 78.0 | 78.0 | 78.0 |
| AHRI Number | 3397632 | 3397632 | 3397632 |
| **Heating Capacity** | | | |
| Max. Input / Output KBTU/h | 138 / 110.4 | 138 / 110.4 | 138 / 110.4 |
| Low Input/ Output KBTU/h | 103 / 83 | 103 / 83 | 103 / 83 |
| Steady State Efficiency | 80 | 80 | 80 |
| Temperature Rise Range (°F) | 30-60 / 15-45 | 30-60 / 15-45 | 30-60 / 15-45 |
| No. of Burners | 6 | 6 | 6 |
| **Evaporator Motor / Coil** | | | |
| Motor Type | Belt Drive | Belt Drive | Belt Drive |
| # of Wheels (D x W) | 1 (11" x 10") | 1 (11" x 10") | 1 (11" x 10") |
| Indoor Nominal CFM | 2,400 | 2,400 | 2,400 |
| Indoor Motor FLA (Cooling) | 5.0 | 2.5 | 2.3 |
| Horsepower - RPM | 1.5-1,725 | 1.5-1,725 | 1.5-1,725 |
| Piston Size (Cooling) | 0.094 | 0.094 | t |
| Filter Size (Qty) | (4) 16" x 20" x 2" | (4) 16" x 20" x 2" | (4) 16" x 20" x 2" |
| Drain Size (NPT) | ¾" | ¾" | ¾" |
| R-410A Refrigerant Charge (oz.) | 213.0 | 213.0 | 213.0 |
| Evaporator Coil Face Area ($ft^2$) | 8.9 | 8.9 | 8.9 |
| Rows Deep/ Fins per Inch | 4/ 16 | 4/ 16 | 4/ 16 |
| Motor Sheave | VL44 x 7/8 | VL44 x 7/8 | VL44 x 7/8 |
| Blower Sheave / Belt | AK59x1 / AX53 | AK59x1 / AX53 | AK59x1 / AX53 |
| **Condenser Fan / Coil** | | | |
| Quantity of Condenser Fan Motors | 1 | 1 | 1 |
| Horsepower - RPM | ⅓ - 1,075 | ⅓ - 1,075 | ⅓ - 1,075 |
| Fan Diameter/ # Fan Blades | 22/ 4 | 22/ 4 | 22/ 4 |
| Outdoor Nominal CFM | 4,300 | 4,300 | 4,300 |
| Face Area ($ft^2$) | 18.7 | 18.7 | 18.7 |
| Rows Deep/ Fins per Inch | 2/ 20 | 2/ 20 | 2/ 20 |
| **Compressor** | | | |
| Quantity / Stage | 1 / Single | 1 / Single | 1 / Single |
| Type | Scroll | Scroll | Scroll |
| Compressor RLA / LRA | 19/ 123 | 9.7/ 62 | 7.4/ 50 |
| **Electrical Data** | | | |
| Voltage/ Phase/ Frequency | 208-230/ 3/ 60 | 460/ 3/ 60 | 575/ 3/ 60 |
| Belt-Driven Standard Max Static | 1.0 | 1.0 | 1.0 |
| Outdoor Fan FLA | 1.90 | 1.20 | 0.90 |
| Total Unit Amps | 25.9 | 13.4 | 10.6 |
| Min. Circuit Ampacity[1] | 31 | 16 | 12 |
| Max. Overcurrent Protection (amps)[2] | 45 | 25 | 15 |
| Entrance Power Supply | 1.125" | 1.125” | 1.125” |
| Entrance Control Voltage | ½" | ½" | ½" |
| **Operating Weight (lbs)** | 690 | 690 | 690 |
| **Ship Weight (lbs)** | 715 | 715 | 715 |

[1] Wire size should be determined in accordance with National Electrical Codes. Extensive wire runs will require larger wire sizes.

[2] May use fuses or HACR-type circuit breakers of the same size as noted.

**Note:** Always check the S&R plate for electrical data on the unit being installed.

# Airflow Data — CPG036B

## Standard Direct Drive — Horizontal

| CFM | Static | Amps | Watts | RPM | Speed Tap |
|---|---|---|---|---|---|
| 1293 | 0.1 | 1.72 | 364 | 715 | Low |
| 1235 | 0.2 | 1.67 | 354 | 759 | |
| 1173 | 0.3 | 1.62 | 342 | 803 | |
| 1124 | 0.4 | 1.58 | 330 | 841 | |
| 1056 | 0.5 | 1.54 | 316 | 880 | |
| 978 | 0.6 | 1.47 | 298 | 913 | |
| 1500 | 0.1 | 2.13 | 462 | 808 | Med |
| 1434 | 0.2 | 2.10 | 448 | 838 | |
| 1381 | 0.3 | 2.04 | 436 | 869 | |
| 1318 | 0.4 | 2.00 | 424 | 902 | |
| 1238 | 0.5 | 1.94 | 406 | 929 | |
| 1163 | 0.6 | 1.88 | 392 | 951 | |
| 1055 | 0.7 | 1.80 | 370 | 990 | |
| 936 | 0.8 | 1.72 | 350 | 1017 | |
| 1441 | 0.4 | 2.35 | 504 | 940 | High |
| 1355 | 0.5 | 2.28 | 484 | 962 | |
| 1264 | 0.6 | 2.21 | 468 | 989 | |
| 1157 | 0.7 | 2.13 | 446 | 1012 | |
| 1027 | 0.8 | 2.03 | 418 | 1034 | |
| 840 | 0.9 | 1.90 | 388 | 1067 | |

**Note:** Assumes dry coil with filter in place; SCFM correction for wet coil = 4%

## Standard Direct Drive — Down Shot

| CFM | Static | Amps | Watts | RPM | Speed Tap |
|---|---|---|---|---|---|
| 1313 | 0.10 | 1.68 | 356 | 748 | Low |
| 1247 | 0.20 | 1.63 | 344 | 786 | |
| 1178 | 0.30 | 1.59 | 334 | 832 | |
| 1094 | 0.40 | 1.55 | 324 | 869 | |
| 1002 | 0.50 | 1.50 | 312 | 913 | |
| 919 | 0.60 | 1.45 | 296 | 940 | |
| 1471 | 0.10 | 2.11 | 454 | 830 | Med |
| 1400 | 0.20 | 2.06 | 440 | 863 | |
| 1354 | 0.30 | 2.02 | 432 | 896 | |
| 1271 | 0.40 | 1.95 | 416 | 929 | |
| 1188 | 0.50 | 1.90 | 398 | 957 | |
| 1083 | 0.60 | 1.82 | 378 | 984 | |
| 955 | 0.70 | 1.74 | 356 | 1012 | |
| 1470 | 0.30 | 2.37 | 510 | 935 | High |
| 1390 | 0.40 | 2.31 | 492 | 957 | |
| 1310 | 0.50 | 2.25 | 476 | 978 | |
| 1206 | 0.60 | 2.17 | 454 | 1000 | |
| 1098 | 0.70 | 2.09 | 436 | 1023 | |
| 966 | 0.80 | 1.99 | 412 | 1045 | |

# Airflow Data — CPG036B (cont.)

## Standard Belt Drive — Horizontal

| ESP (" $H_2O$) | Turns Open | | | | | | | | | | | |
|---|---|---|---|---|---|---|---|---|---|---|---|---|
| | 0 | | 1 | | 2 | | 3 | | 4 | | 5 | |
| | CFM | BHP | CFM | BHP | CFM | BHP | CFM | BHP | CFM | BHP | CFM | BHP |
| 0.2 | | | | | | | | | 1524 | 0.32 | 1340 | 0.25 |
| 0.4 | | | | | 1628 | 0.41 | 1396 | 0.32 | 1171 | 0.24 | 900 | 0.16 |
| 0.6 | | | 1541 | 0.43 | 1284 | 0.32 | 1024 | 0.23 | 714 | 0.14 | | |
| 0.8 | 1444 | 0.45 | 1193 | 0.33 | 936 | 0.24 | | | | | | |
| 1.0 | 1111 | 0.34 | 806 | 0.23 | | | | | | | | |
| 1.2 | 744 | 0.22 | | | | | | | | | | |

## High-Static Belt Drive — Horizontal

| ESP (" $H_2O$) | Turns Open | | | | | | | | | | | |
|---|---|---|---|---|---|---|---|---|---|---|---|---|
| | 0 | | 1 | | 2 | | 3 | | 4 | | 5 | |
| | CFM | BHP | CFM | BHP | CFM | BHP | CFM | BHP | CFM | BHP | CFM | BHP |
| 0.6 | | | | | | | | | 1568 | 0.45 | 1266 | 0.32 |
| 0.8 | | | | | | | 1492 | 0.47 | 1194 | 0.34 | 922 | 0.23 |
| 1.0 | | | | | 1476 | 0.52 | 1163 | 0.37 | 856 | 0.24 | | |
| 1.2 | | | 1458 | 0.57 | 1146 | 0.41 | 802 | 0.25 | | | | |
| 1.4 | 1458 | 0.63 | 1139 | 0.46 | 782 | 0.30 | | | | | | |
| 1.6 | 1139 | 0.52 | 844 | 0.36 | | | | | | | | |
| 1.8 | 844 | 0.42 | | | | | | | | | | |

## Standard Belt Drive — Down Shot

| ESP (" $H_2O$) | Turns Open | | | | | | | | | | | |
|---|---|---|---|---|---|---|---|---|---|---|---|---|
| | 0 | | 1 | | 2 | | 3 | | 4 | | 5 | |
| | CFM | BHP | CFM | BHP | CFM | BHP | CFM | BHP | CFM | BHP | CFM | BHP |
| 0.2 | | | | | | | 1596 | 0.36 | 1368 | 0.28 | 1162 | 0.21 |
| 0.4 | | | | | 1468 | 0.37 | 1224 | 0.28 | 981 | 0.20 | | |
| 0.6 | 1610 | 0.51 | 1383 | 0.39 | 1124 | 0.28 | 856 | 0.19 | | | | |
| 0.8 | 1293 | 0.40 | 1021 | 0.29 | 776 | 0.20 | | | | | | |
| 1.0 | 948 | 0.29 | 614 | 0.17 | | | | | | | | |

## High-Static Belt Drive — Down Shot

| ESP (" $H_2O$) | Turns Open | | | | | | | | | | | |
|---|---|---|---|---|---|---|---|---|---|---|---|---|
| | 0 | | 1 | | 2 | | 3 | | 4 | | 5 | |
| | CFM | BHP | CFM | BHP | CFM | BHP | CFM | BHP | CFM | BHP | CFM | BHP |
| 0.6 | | | | | | | 1655 | 0.53 | 1389 | 0.39 | 1103 | 0.28 |
| 0.8 | | | | | 1640 | 0.57 | 1342 | 0.43 | 1035 | 0.29 | 775 | 0.19 |
| 1.0 | | | 1638 | 0.63 | 1326 | 0.47 | 1002 | 0.32 | 713 | 0.19 | | |
| 1.2 | 1638 | 0.69 | 1307 | 0.52 | 984 | 0.36 | | | | | | |
| 1.4 | 1307 | 0.58 | 1002 | 0.42 | | | | | | | | |
| 1.6 | 1002 | 0.48 | 717 | 0.32 | | | | | | | | |
| 1.8 | 717 | 0.38 | | | | | | | | | | |

Note: Tables represent dry coil without filter; to compensate for filter, add 0.08" to measured E.S.P. SCFM correction for wet coil = 4%.

# Airflow Data — CPG048B

## Standard Direct Drive — Horizontal

| CFM | Static | Amps | Watts | RPM | Speed Tap |
|---|---|---|---|---|---|
| 1592 | 0.1 | 2.54 | 543 | 815 | Low |
| 1528 | 0.2 | 2.43 | 521 | 858 | |
| 1464 | 0.3 | 2.32 | 499 | 901 | |
| 1380 | 0.4 | 2.21 | 475 | 930 | |
| 1296 | 0.5 | 2.10 | 451 | 959 | |
| 1828 | 0.1 | 3.08 | 665 | 892 | Med |
| 1700 | 0.2 | 2.75 | 601 | 924 | |
| 1606 | 0.3 | 2.61 | 563 | 966 | |
| 1531 | 0.4 | 2.48 | 537 | 990 | |
| 1401 | 0.5 | 2.32 | 503 | 1023 | |
| 1287 | 0.6 | 2.22 | 477 | 1045 | |
| 1123 | 0.7 | 2.05 | 441 | 1073 | |
| 1926 | 0.1 | 3.34 | 740 | 937 | High |
| 1825 | 0.2 | 3.18 | 700 | 965 | |
| 1712 | 0.3 | 3.03 | 660 | 989 | |
| 1598 | 0.4 | 2.87 | 626 | 1015 | |
| 1482 | 0.5 | 2.76 | 596 | 1032 | |
| 1357 | 0.6 | 2.62 | 564 | 1049 | |

**Note:** Assumes dry coil with filter in place; SCFM correction for wet coil = 4%

## Standard Direct Drive — Down Shot

| CFM | Static | Amps | Watts | RPM | Speed Tap |
|---|---|---|---|---|---|
| 1612 | 0.1 | 2.60 | 554 | 789 | Low |
| 1548 | 0.2 | 2.49 | 532 | 832 | |
| 1484 | 0.3 | 2.38 | 510 | 875 | |
| 1400 | 0.4 | 2.27 | 486 | 904 | |
| 1316 | 0.5 | 2.16 | 462 | 933 | |
| 1846 | 0.1 | 3.14 | 676 | 866 | Med |
| 1718 | 0.2 | 2.81 | 612 | 898 | |
| 1624 | 0.3 | 2.67 | 574 | 940 | |
| 1549 | 0.4 | 2.54 | 548 | 964 | |
| 1419 | 0.5 | 2.38 | 514 | 997 | |
| 1305 | 0.6 | 2.28 | 488 | 1019 | |
| 1141 | 0.7 | 2.11 | 452 | 1047 | |
| 1954 | 0.1 | 3.43 | 758 | 924 | High |
| 1853 | 0.2 | 3.27 | 718 | 952 | |
| 1740 | 0.3 | 3.12 | 678 | 976 | |
| 1626 | 0.4 | 2.96 | 644 | 1002 | |
| 1510 | 0.5 | 2.85 | 614 | 1019 | |
| 1385 | 0.6 | 2.71 | 582 | 1036 | |

# Airflow Data — CPG048B (cont.)

## Standard Belt Drive — Horizontal

| ESP (" $H_2O$) | Turns Open | | | | | | | | | | | |
|---|---|---|---|---|---|---|---|---|---|---|---|---|
| | 0 | | 1 | | 2 | | 3 | | 4 | | 5 | |
| | CFM | BHP | CFM | BHP | CFM | BHP | CFM | BHP | CFM | BHP | CFM | BHP |
| 0.2 | | | | | | | | | 1800 | 0.47 | 1556 | 0.35 |
| 0.4 | | | | | 2002 | 0.65 | 1708 | 0.49 | 1438 | 0.36 | 1167 | 0.22 |
| 0.6 | | | 1910 | 0.67 | 1612 | 0.50 | 1330 | 0.37 | 1030 | 0.23 | | |
| 0.8 | 1813 | 0.69 | 1571 | 0.54 | 1222 | 0.36 | 989 | 0.25 | | | | |
| 1.0 | 1478 | 0.56 | 1142 | 0.32 | | | | | | | | |
| 1.2 | 1107 | 0.41 | | | | | | | | | | |

## High-Static Belt Drive — Horizontal

| ESP (" $H_2O$) | Turns Open | | | | | | | | | | | |
|---|---|---|---|---|---|---|---|---|---|---|---|---|
| | 0 | | 1 | | 2 | | 3 | | 4 | | 5 | |
| | CFM | BHP | CFM | BHP | CFM | BHP | CFM | BHP | CFM | BHP | CFM | BHP |
| 0.6 | | | | | | | | | 1894 | 0.66 | 1585 | 0.49 |
| 0.8 | | | | | | | 1839 | 0.71 | 1532 | 0.53 | 1223 | 0.37 |
| 1.0 | | | | | 1782 | 0.73 | 1477 | 0.55 | 1170 | 0.39 | | |
| 1.2 | | | 1786 | 0.80 | 1445 | 0.59 | 1115 | 0.40 | | | | |
| 1.4 | 1764 | 0.86 | 1426 | 0.64 | 1107 | 0.46 | | | | | | |
| 1.6 | 1446 | 0.72 | 1098 | 0.50 | | | | | | | | |
| 1.8 | 1099 | 0.56 | | | | | | | | | | |

## Standard Belt Drive — Down Shot

| ESP (" $H_2O$) | Turns Open | | | | | | | | | | | |
|---|---|---|---|---|---|---|---|---|---|---|---|---|
| | 0 | | 1 | | 2 | | 3 | | 4 | | 5 | |
| | CFM | BHP | CFM | BHP | CFM | BHP | CFM | BHP | CFM | BHP | CFM | BHP |
| 0.2 | | | | | | | 1891 | 0.56 | 1632 | 0.42 | 1391 | 0.30 |
| 0.4 | | | | | 1796 | 0.57 | 1533 | 0.43 | 1290 | 0.31 | 1055 | 0.19 |
| 0.6 | 1948 | 0.74 | 1744 | 0.61 | 1446 | 0.44 | 1206 | 0.32 | 910 | 0.19 | | |
| 0.8 | 1654 | 0.63 | 1409 | 0.48 | 1096 | 0.31 | | | | | | |
| 1.0 | 1337 | 0.50 | 987 | 0.28 | | | | | | | | |

## High-Static Belt Drive — Down Shot

| ESP (" $H_2O$) | Turns Open | | | | | | | | | | | |
|---|---|---|---|---|---|---|---|---|---|---|---|---|
| | 0 | | 1 | | 2 | | 3 | | 4 | | 5 | |
| | CFM | BHP | CFM | BHP | CFM | BHP | CFM | BHP | CFM | BHP | CFM | BHP |
| 0.6 | | | | | | | 1989 | 0.77 | 1712 | 0.59 | 1433 | 0.44 |
| 0.8 | | | | | 1929 | 0.79 | 1662 | 0.63 | 1384 | 0.47 | 1106 | 0.33 |
| 1.0 | | | 1952 | 0.88 | 1622 | 0.67 | 1335 | 0.49 | 1056 | 0.34 | | |
| 1.2 | 1897 | 0.93 | 1611 | 0.73 | 1315 | 0.54 | 1008 | 0.36 | | | | |
| 1.4 | 1616 | 0.80 | 1298 | 0.59 | 1007 | 0.42 | | | | | | |
| 1.6 | 1316 | 0.66 | 1007 | 0.46 | | | | | | | | |
| 1.8 | | | | | | | | | | | | |

Note: Tables represent dry coil without filter; to compensate for filter, add 0.08" to measured E.S.P. SCFM correction for wet coil = 4%.

# Airflow Data — CPG060B

## Standard Direct-Drive — Horizontal

| CFM | Static | Amps | Watts | RPM | Speed Tap |
|---|---|---|---|---|---|
| 1416 | 0.1 | 1.63 | 176 | 588 | T1 |
| 1295 | 0.2 | 1.61 | 174 | 621 | |
| 1200 | 0.3 | 1.68 | 186 | 660 | |
| 1133 | 0.4 | 1.79 | 196 | 704 | |
| 1045 | 0.5 | 1.90 | 208 | 753 | |
| 1543 | 0.1 | 2.00 | 220 | 627 | T2 |
| 1485 | 0.2 | 2.12 | 236 | 671 | |
| 1425 | 0.3 | 2.20 | 250 | 698 | |
| 1352 | 0.4 | 2.26 | 258 | 748 | |
| 1304 | 0.5 | 2.39 | 274 | 786 | |
| 2107 | 0.1 | 4.02 | 502 | 797 | T3 |
| 2031 | 0.2 | 4.13 | 518 | 819 | |
| 1980 | 0.3 | 4.27 | 536 | 858 | |
| 1954 | 0.4 | 4.37 | 554 | 880 | |
| 1887 | 0.5 | 4.48 | 572 | 913 | |
| 1839 | 0.6 | 4.58 | 582 | 940 | |
| 1782 | 0.7 | 4.72 | 602 | 968 | |
| 2224 | 0.1 | 4.73 | 592 | 832 | T4 |
| 2165 | 0.2 | 4.79 | 612 | 860 | |
| 2123 | 0.3 | 4.91 | 630 | 891 | |
| 2079 | 0.4 | 5.01 | 642 | 913 | |
| 2029 | 0.5 | 5.14 | 666 | 946 | |
| 1978 | 0.6 | 5.26 | 676 | 969 | |
| 1926 | 0.7 | 5.38 | 698 | 1001 | |
| 1872 | 0.8 | 5.48 | 712 | 1028 | |
| 1817 | 0.9 | 5.58 | 722 | 1056 | |
| 2318 | 0.1 | 5.42 | 700 | 874 | T5 |
| 2296 | 0.2 | 5.55 | 720 | 903 | |
| 2228 | 0.3 | 5.66 | 734 | 929 | |
| 2193 | 0.4 | 5.76 | 748 | 950 | |
| 2145 | 0.5 | 5.90 | 766 | 979 | |
| 2097 | 0.6 | 5.99 | 784 | 1012 | |
| 2054 | 0.7 | 6.10 | 798 | 1034 | |
| 1991 | 0.8 | 6.15 | 810 | 1050 | |
| 1952 | 0.9 | 6.26 | 826 | 1079 | |

## Standard Direct-Drive — Down Shot

| CFM | Static | Amps | Watts | RPM | Speed Tap |
|---|---|---|---|---|---|
| 1237 | 0.1 | 1.64 | 180 | 638 | T1 |
| 1191 | 0.2 | 1.75 | 194 | 682 | |
| 1127 | 0.3 | 1.80 | 200 | 715 | |
| 1065 | 0.4 | 1.89 | 214 | 753 | |
| 994 | 0.5 | 1.97 | 220 | 797 | |
| 1437 | 0.1 | 2.13 | 248 | 687 | T2 |
| 1384 | 0.2 | 2.24 | 254 | 726 | |
| 1312 | 0.3 | 2.29 | 262 | 759 | |
| 1245 | 0.4 | 2.42 | 280 | 803 | |
| 1185 | 0.5 | 2.54 | 294 | 847 | |
| 1988 | 0.1 | 4.49 | 558 | 885 | T3 |
| 1942 | 0.2 | 4.58 | 574 | 907 | |
| 1882 | 0.3 | 4.69 | 582 | 935 | |
| 1847 | 0.4 | 4.80 | 600 | 962 | |
| 1784 | 0.5 | 4.87 | 612 | 990 | |
| 1762 | 0.6 | 4.97 | 626 | 1008 | |
| 1688 | 0.7 | 5.05 | 642 | 1039 | |
| 2106 | 0.1 | 5.14 | 650 | 924 | T4 |
| 2050 | 0.2 | 5.26 | 670 | 951 | |
| 1993 | 0.3 | 5.32 | 678 | 969 | |
| 1960 | 0.4 | 5.47 | 696 | 1001 | |
| 1920 | 0.5 | 5.54 | 706 | 1021 | |
| 1880 | 0.6 | 5.61 | 726 | 1041 | |
| 1810 | 0.7 | 5.73 | 736 | 1072 | |
| 1760 | 0.8 | 5.81 | 750 | 1093 | |
| 1694 | 0.9 | 5.84 | 752 | 1122 | |
| 2199 | 0.1 | 5.87 | 762 | 968 | T5 |
| 2146 | 0.2 | 5.96 | 772 | 989 | |
| 2121 | 0.3 | 6.06 | 788 | 1012 | |
| 2066 | 0.4 | 6.15 | 804 | 1039 | |
| 2010 | 0.5 | 6.21 | 814 | 1056 | |
| 1978 | 0.6 | 6.32 | 834 | 1084 | |
| 1919 | 0.7 | 6.28 | 830 | 1102 | |
| 1837 | 0.8 | 6.22 | 814 | 1122 | |
| 1738 | 0.9 | 6.04 | 786 | 1127 | |

**Notes**

- Assumes dry coil with filter in place; SCFM correction for wet coil = 4%
- Five-ton models are shipped from the factory with speed tap set on T4.

# Airflow Data — CPG060B (cont.)

## Standard Belt Drive — Horizontal

| ESP (" $H_2O$) | Turns Open | | | | | | | | | | | |
|---|---|---|---|---|---|---|---|---|---|---|---|---|
| | 0 | | 1 | | 2 | | 3 | | 4 | | 5 | |
| | CFM | BHP | CFM | BHP | CFM | BHP | CFM | BHP | CFM | BHP | CFM | BHP |
| 0.2 | | | | | 2460 | 0.96 | 2251 | 0.80 | 2073 | 0.65 | 1862 | 0.51 |
| 0.4 | | | 2408 | 1.00 | 2206 | 0.84 | 1982 | 0.68 | 1808 | 0.55 | 1572 | 0.41 |
| 0.6 | 2402 | 1.08 | 2173 | 0.89 | 1943 | 0.72 | 1701 | 0.55 | 1511 | 0.43 | | |
| 0.8 | 2153 | 0.95 | 1917 | 0.77 | 1667 | 0.59 | | | | | | |
| 1.0 | 1888 | 0.82 | 1634 | 0.63 | | | | | | | | |
| 1.2 | 1601 | 0.67 | | | | | | | | | | |

## High-Static Belt Drive — Horizontal

| ESP (" $H_2O$) | Turns Open | | | | | | | | | | | |
|---|---|---|---|---|---|---|---|---|---|---|---|---|
| | 0 | | 1 | | 2 | | 3 | | 4 | | 5 | |
| | CFM | BHP | CFM | BHP | CFM | BHP | CFM | BHP | CFM | BHP | CFM | BHP |
| 0.6 | | | | | | | | | 2219 | 0.95 | 1970 | 0.75 |
| 0.8 | | | | | | | 2215 | 1.04 | 1956 | 0.82 | 1697 | 0.62 |
| 1.0 | | | | | 2240 | 1.15 | 1957 | 0.90 | 1681 | 0.67 | | |
| 1.2 | | | 2260 | 1.26 | 1983 | 1.00 | 1683 | 0.74 | | | | |
| 1.4 | 2288 | 1.38 | 2009 | 1.10 | 1711 | 0.84 | | | | | | |
| 1.6 | 2032 | 1.21 | 1741 | 0.93 | | | | | | | | |
| 1.8 | 1776 | 1.04 | | | | | | | | | | |

## Standard Belt Drive — Down Shot

| ESP (" $H_2O$) | Turns Open | | | | | | | | | | | |
|---|---|---|---|---|---|---|---|---|---|---|---|---|
| | 0 | | 1 | | 2 | | 3 | | 4 | | 5 | |
| | CFM | BHP | CFM | BHP | CFM | BHP | CFM | BHP | CFM | BHP | CFM | BHP |
| 0.2 | | | 2210 | 0.91 | 2041 | 0.76 | 1869 | 0.63 | 1739 | 0.52 | 1565 | 0.40 |
| 0.4 | 2197 | 0.98 | 2021 | 0.82 | 1841 | 0.67 | 1660 | 0.54 | 1521 | 0.44 | 1339 | 0.32 |
| 0.6 | 2002 | 0.88 | 1822 | 0.72 | 1635 | 0.58 | 1445 | 0.44 | 1288 | 0.35 | | |
| 0.8 | 1799 | 0.77 | 1610 | 0.62 | 1425 | 0.48 | | | | | | |
| 1.0 | 1587 | 0.67 | 1384 | 0.51 | | | | | | | | |

## High-Static Belt Drive — Down Shot

| ESP (" $H_2O$) | Turns Open | | | | | | | | | | | |
|---|---|---|---|---|---|---|---|---|---|---|---|---|
| | 0 | | 1 | | 2 | | 3 | | 4 | | 5 | |
| | CFM | BHP | CFM | BHP | CFM | BHP | CFM | BHP | CFM | BHP | CFM | BHP |
| 0.6 | | | | | 2262 | 1.16 | 2051 | 0.95 | 1851 | 0.76 | 1657 | 0.60 |
| 0.8 | | | 2277 | 1.27 | 2070 | 1.05 | 1852 | 0.84 | 1646 | 0.66 | | |
| 1.0 | 2304 | 1.39 | 2089 | 1.15 | 1872 | 0.93 | 1647 | 0.72 | | | | |
| 1.2 | 2104 | 1.26 | 1893 | 1.03 | 1668 | 0.81 | | | | | | |
| 1.4 | 1912 | 1.13 | 1690 | 0.90 | | | | | | | | |
| 1.6 | 1720 | 1.00 | | | | | | | | | | |

**Note:** Tables represent dry coil without filter; to compensate for filter, add 0.08" to measured E.S.P. SCFM correction for wet coil = 4%.

# Airflow Data — CPG072B

## Standard Belt Drive — Horizontal

| ESP (In W.C.) | 0 Turns | | 1 Turn | | 2 Turns | | 3 Turns | | 4 Turns | | 5 Turns | |
|---|---|---|---|---|---|---|---|---|---|---|---|---|
| | CFM | BHP | CFM | BHP | CFM | BHP | CFM | BHP | CFM | BHP | CFM | BHP |
| 0.2 | | | | | | | 2749 | 1.18 | 2573 | 0.96 | 2402 | 0.79 |
| 0.4 | | | | | 2680 | 1.22 | 2544 | 1.06 | 2346 | 0.84 | 2164 | 0.68 |
| 0.6 | | | 2655 | 1.31 | 2498 | 1.10 | 2306 | 0.92 | 2094 | 0.72 | 1890 | 0.57 |
| 0.8 | 2703 | 1.47 | 2486 | 1.20 | 2263 | 0.97 | 2076 | 0.81 | | | | |
| 1 | 2515 | 1.34 | 2272 | 1.07 | 2002 | 0.83 | | | | | | |
| 1.2 | 2253 | 1.16 | 2028 | 0.93 | | | | | | | | |

## Standard Belt Drive — Down Shot

| ESP (In W.C.) | 0 Turns | | 1 Turn | | 2 Turns | | 3 Turns | | 4 Turns | | 5 Turns | |
|---|---|---|---|---|---|---|---|---|---|---|---|---|
| | CFM | BHP | CFM | BHP | CFM | BHP | CFM | BHP | CFM | BHP | CFM | BHP |
| 0.2 | | | | | 2625 | 1.18 | 2486 | 1.02 | 2322 | 0.83 | 2152 | 0.68 |
| 0.4 | 2765 | 1.52 | 2596 | 1.28 | 2476 | 1.09 | 2327 | 0.94 | 2159 | 0.75 | 1938 | 0.59 |
| 0.6 | 2650 | 1.43 | 2452 | 1.18 | 2325 | 1.00 | 2070 | 0.80 | 1898 | 0.64 | | |
| 0.8 | 2443 | 1.29 | 2251 | 1.06 | 2068 | 0.86 | 1868 | 0.71 | | | | |
| 1 | 2258 | 1.17 | 2040 | 0.94 | 1806 | 0.73 | | | | | | |
| 1.2 | 2021 | 1.02 | | | | | | | | | | |

## High Static Belt Drive — Horizontal

| ESP (In W.C.) | 0 Turns | | 1 Turn | | 2 Turns | | 3 Turns | | 4 Turns | | 5 Turns | |
|---|---|---|---|---|---|---|---|---|---|---|---|---|
| | CFM | BHP | CFM | BHP | CFM | BHP | CFM | BHP | CFM | BHP | CFM | BHP |
| 0.6 | | | | | | | | | 2677 | 1.29 | 2486 | 1.07 |
| 0.8 | | | | | | | 2690 | 1.42 | 2529 | 1.20 | 2263 | 0.94 |
| 1 | | | | | 2740 | 1.60 | 2471 | 1.27 | 2246 | 1.02 | 1972 | 0.79 |
| 1.2 | | | 2748 | 1.74 | 2518 | 1.44 | 2255 | 1.13 | 1970 | 0.87 | | |
| 1.4 | 2797 | 1.87 | 2562 | 1.59 | 2273 | 1.27 | 2025 | 0.99 | | | | |
| 1.6 | 2556 | 1.67 | 2314 | 1.40 | 2035 | 1.11 | | | | | | |
| 1.8 | 2342 | 1.50 | 2037 | 1.21 | | | | | | | | |
| 2 | 2137 | 1.35 | | | | | | | | | | |

## High Static Belt Drive — Down Shot

| ESP (In W.C.) | 0 Turns | | 1 Turn | | 2 Turns | | 3 Turns | | 4 Turns | | 5 Turns | |
|---|---|---|---|---|---|---|---|---|---|---|---|---|
| | CFM | BHP | CFM | BHP | CFM | BHP | CFM | BHP | CFM | BHP | CFM | BHP |
| 0.6 | | | | | 2793 | 1.64 | 2575 | 1.37 | 2407 | 1.15 | 2250 | 0.96 |
| 0.8 | | | 2775 | 1.76 | 2638 | 1.53 | 2407 | 1.25 | 2226 | 1.04 | 2011 | 0.84 |
| 1 | 2821 | 1.89 | 2660 | 1.67 | 2407 | 1.36 | 2194 | 1.12 | 2012 | 0.92 | | |
| 1.2 | 2696 | 1.79 | 2497 | 1.54 | 2228 | 1.23 | 1977 | 0.98 | | | | |
| 1.4 | 2455 | 1.59 | 2236 | 1.35 | 2013 | 1.10 | | | | | | |
| 1.6 | 2262 | 1.44 | 2032 | 1.20 | | | | | | | | |
| 1.8 | 2069 | 1.30 | | | | | | | | | | |

# Expanded Cooling Data — CPG036B

| | | | Outdoor Ambient Temperature | | | | | | | | | | | | | | | | | | | | | | | |
|---|---|---|---|---|---|---|---|---|---|---|---|---|---|---|---|---|---|---|---|---|---|---|---|---|---|---|
| | | | 65 | | | | 75 | | | | 85 | | | | 95 | | | | 105 | | | | 115 | | | |
| | | | Entering Indoor Wet Bulb Temperature | | | | | | | | | | | | | | | | | | | | | | | |
| IDB | Airflow | | 59 | 63 | 67 | 71 | 59 | 63 | 67 | 71 | 59 | 63 | 67 | 71 | 59 | 63 | 67 | 71 | 59 | 63 | 67 | 71 | 59 | 63 | 67 | 71 |
| 70 | 1350 | MBh | 33.9 | 35.1 | 38.5 | - | 33.1 | 34.3 | 37.6 | - | 32.3 | 33.5 | 36.7 | - | 31.5 | 32.7 | 35.8 | - | 30.0 | 31.1 | 34.0 | - | 27.8 | 28.8 | 31.5 | - |
| | | S/T | 0.72 | 0.60 | 0.42 | - | 0.75 | 0.63 | 0.43 | - | 0.77 | 0.64 | 0.44 | - | 0.79 | 0.66 | 0.46 | - | 0.82 | 0.69 | 0.48 | - | 0.83 | 0.69 | 0.48 | - |
| | | ΔT | 17 | 14 | 11 | - | 17 | 15 | 11 | - | 17 | 15 | 11 | - | 17 | 15 | 11 | - | 17 | 15 | 11 | - | 16 | 14 | 10 | - |
| | | kW | 2.44 | 2.48 | 2.56 | - | 2.61 | 2.66 | 2.74 | - | 2.76 | 2.82 | 2.90 | - | 2.90 | 2.95 | 3.05 | - | 3.01 | 3.07 | 3.17 | - | 3.11 | 3.17 | 3.27 | - |
| | | Amps | 8.5 | 8.7 | 8.9 | - | 9.0 | 9.2 | 9.4 | - | 9.6 | 9.8 | 10.0 | - | 10.1 | 10.3 | 10.5 | - | 10.6 | 10.8 | 11.0 | - | 11.1 | 11.3 | 11.6 | - |
| | | HI PR | 221 | 237 | 251 | - | 247 | 266 | 281 | - | 281 | 303 | 320 | - | 321 | 345 | 364 | - | 361 | 388 | 410 | - | 398 | 429 | 453 | - |
| | | LO PR | 107 | 114 | 124 | - | 113 | 120 | 131 | - | 118 | 125 | 137 | - | 124 | 131 | 144 | - | 130 | 138 | 150 | - | 134 | 143 | 156 | - |
| | 1200 | MBh | 32.9 | 34.1 | 37.4 | - | 32.2 | 33.3 | 36.5 | - | 31.4 | 32.5 | 35.6 | - | 30.6 | 31.7 | 34.8 | - | 29.1 | 30.2 | 33.0 | - | 26.9 | 27.9 | 30.6 | - |
| | | S/T | 0.69 | 0.58 | 0.40 | - | 0.71 | 0.60 | 0.41 | - | 0.73 | 0.61 | 0.42 | - | 0.76 | 0.63 | 0.44 | - | 0.79 | 0.66 | 0.45 | - | 0.79 | 0.66 | 0.46 | - |
| | | ΔT | 17 | 15 | 11 | - | 18 | 15 | 12 | - | 18 | 15 | 12 | - | 18 | 15 | 12 | - | 18 | 15 | 11 | - | 16 | 14 | 11 | - |
| | | kW | 2.42 | 2.47 | 2.54 | - | 2.59 | 2.64 | 2.72 | - | 2.74 | 2.80 | 2.88 | - | 2.87 | 2.93 | 3.02 | - | 2.99 | 3.05 | 3.14 | - | 3.08 | 3.15 | 3.25 | - |
| | | Amps | 8.5 | 8.6 | 8.8 | - | 8.9 | 9.1 | 9.3 | - | 9.5 | 9.7 | 9.9 | - | 10.0 | 10.2 | 10.4 | - | 10.5 | 10.7 | 11.0 | - | 11.0 | 11.2 | 11.5 | - |
| | | HI PR | 218 | 235 | 248 | - | 245 | 264 | 278 | - | 279 | 300 | 317 | - | 317 | 342 | 361 | - | 357 | 384 | 406 | - | 394 | 425 | 448 | - |
| | | LO PR | 106 | 113 | 123 | - | 112 | 119 | 130 | - | 116 | 124 | 135 | - | 122 | 130 | 142 | - | 128 | 136 | 149 | - | 133 | 141 | 154 | - |
| | 1050 | MBh | 30.4 | 31.5 | 34.5 | - | 29.7 | 30.8 | 33.7 | - | 29.0 | 30.0 | 32.9 | - | 28.3 | 29.3 | 32.1 | - | 26.9 | 27.8 | 30.5 | - | 24.9 | 25.8 | 28.2 | - |
| | | S/T | 0.67 | 0.56 | 0.38 | - | 0.69 | 0.58 | 0.40 | - | 0.71 | 0.59 | 0.41 | - | 0.73 | 0.61 | 0.42 | - | 0.76 | 0.63 | 0.44 | - | 0.76 | 0.64 | 0.44 | - |
| | | ΔT | 18 | 15 | 12 | - | 18 | 16 | 12 | - | 18 | 16 | 12 | - | 18 | 16 | 12 | - | 18 | 15 | 12 | - | 17 | 14 | 11 | - |
| | | kW | 2.37 | 2.41 | 2.48 | - | 2.53 | 2.58 | 2.66 | - | 2.68 | 2.73 | 2.81 | - | 2.81 | 2.86 | 2.95 | - | 2.92 | 2.98 | 3.07 | - | 3.01 | 3.07 | 3.17 | - |
| | | Amps | 8.3 | 8.4 | 8.6 | - | 8.8 | 8.9 | 9.1 | - | 9.3 | 9.5 | 9.7 | - | 9.8 | 10.0 | 10.2 | - | 10.3 | 10.5 | 10.7 | - | 10.7 | 10.9 | 11.2 | - |
| | | HI PR | 212 | 228 | 241 | - | 238 | 256 | 270 | - | 270 | 291 | 307 | - | 308 | 331 | 350 | - | 346 | 373 | 394 | - | 383 | 412 | 435 | - |
| | | LO PR | 103 | 109 | 120 | - | 109 | 116 | 126 | - | 113 | 120 | 131 | - | 119 | 126 | 138 | - | 124 | 132 | 144 | - | 129 | 137 | 149 | - |
| 75 | 1350 | MBh | 34.5 | 35.5 | 38.4 | 41.2 | 33.7 | 34.7 | 37.5 | 40.3 | 32.9 | 33.8 | 36.6 | 39.3 | 32.1 | 33.0 | 35.7 | 38.4 | 30.5 | 31.4 | 34.0 | 36.4 | 28.2 | 29.1 | 31.5 | 33.8 |
| | | S/T | 0.82 | 0.74 | 0.56 | 0.36 | 0.85 | 0.76 | 0.58 | 0.37 | 0.87 | 0.78 | 0.59 | 0.38 | 0.90 | 0.81 | 0.61 | 0.39 | 0.94 | 0.84 | 0.63 | 0.41 | 0.94 | 0.84 | 0.64 | 0.41 |
| | | ΔT | 19 | 18 | 15 | 10 | 20 | 18 | 15 | 10 | 20 | 18 | 15 | 10 | 20 | 18 | 15 | 10 | 19 | 18 | 15 | 10 | 18 | 17 | 14 | 9 |
| | | kW | 2.46 | 2.50 | 2.58 | 2.65 | 2.63 | 2.68 | 2.76 | 2.85 | 2.78 | 2.84 | 2.93 | 3.02 | 2.92 | 2.98 | 3.07 | 3.17 | 3.03 | 3.10 | 3.19 | 3.29 | 3.13 | 3.20 | 3.30 | 3.40 |
| | | Amps | 8.6 | 8.7 | 8.9 | 9.2 | 9.1 | 9.2 | 9.5 | 9.7 | 9.6 | 9.8 | 10.1 | 10.4 | 10.1 | 10.3 | 10.6 | 10.9 | 10.6 | 10.8 | 11.1 | 11.5 | 11.1 | 11.4 | 11.7 | 12.0 |
| | | HI PR | 223 | 240 | 253 | 264 | 250 | 269 | 284 | 296 | 284 | 306 | 323 | 337 | 324 | 348 | 368 | 384 | 364 | 392 | 414 | 432 | 402 | 433 | 457 | 477 |
| | | LO PR | 108 | 115 | 126 | 134 | 114 | 122 | 133 | 141 | 119 | 126 | 138 | 147 | 125 | 133 | 145 | 154 | 131 | 139 | 152 | 162 | 135 | 144 | 157 | 167 |
| | 1200 | MBh | 33.5 | 34.5 | 37.3 | 40.0 | 32.7 | 33.7 | 36.4 | 39.1 | 31.9 | 32.9 | 35.6 | 38.2 | 31.1 | **32.1** | 34.7 | 37.2 | 29.6 | 30.5 | 33.0 | 35.4 | 27.4 | 28.2 | 30.5 | 32.8 |
| | | S/T | 0.78 | 0.70 | 0.53 | 0.34 | 0.81 | 0.73 | 0.55 | 0.35 | 0.83 | 0.75 | 0.56 | 0.36 | 0.86 | **0.77** | 0.58 | 0.37 | 0.89 | 0.80 | 0.60 | 0.39 | 0.90 | 0.81 | 0.61 | 0.39 |
| | | ΔT | 20 | 19 | 15 | 10 | 20 | 19 | 15 | 11 | 20 | 19 | 15 | 11 | 21 | **19** | 15 | 11 | 20 | 19 | 15 | 11 | 19 | 17 | 14 | 10 |
| | | kW | 2.44 | 2.49 | 2.56 | 2.63 | 2.61 | 2.66 | 2.74 | 2.82 | 2.76 | 2.82 | 2.90 | 2.99 | 2.90 | **2.96** | 3.05 | 3.14 | 3.01 | 3.07 | 3.17 | 3.27 | 3.11 | 3.17 | 3.27 | 3.38 |
| | | Amps | 8.5 | 8.7 | 8.9 | 9.1 | 9.0 | 9.2 | 9.4 | 9.6 | 9.6 | 9.8 | 10.0 | 10.3 | 10.1 | **10.3** | 10.5 | 10.8 | 10.6 | 10.8 | 11.1 | 11.4 | 11.1 | 11.3 | 11.6 | 11.9 |
| | | HI PR | 221 | 237 | 251 | 261 | 248 | 266 | 281 | 293 | 281 | 303 | 320 | 334 | 321 | **345** | 364 | 380 | 361 | 388 | 410 | 427 | 399 | 429 | 453 | 472 |
| | | LO PR | 107 | 114 | 124 | 133 | 113 | 120 | 131 | 140 | 118 | 125 | 137 | 146 | 124 | **131** | 144 | 153 | 130 | 138 | 150 | 160 | 134 | 143 | 156 | 166 |
| | 1050 | MBh | 30.9 | 31.8 | 34.4 | 37.0 | 30.2 | 31.1 | 33.6 | 36.1 | 29.5 | 30.3 | 32.8 | 35.2 | 28.7 | 29.6 | 32.0 | 34.4 | 27.3 | 28.1 | 30.4 | 32.7 | 25.3 | 26.0 | 28.2 | 30.3 |
| | | S/T | 0.76 | 0.68 | 0.51 | 0.33 | 0.78 | 0.70 | 0.53 | 0.34 | 0.80 | 0.72 | 0.54 | 0.35 | 0.83 | 0.74 | 0.56 | 0.36 | 0.86 | 0.77 | 0.58 | 0.37 | 0.87 | 0.78 | 0.59 | 0.38 |
| | | ΔT | 20 | 19 | 15 | 11 | 21 | 19 | 16 | 11 | 21 | 19 | 16 | 11 | 21 | 19 | 16 | 11 | 21 | 19 | 16 | 11 | 19 | 18 | 15 | 10 |
| | | kW | 2.38 | 2.43 | 2.50 | 2.57 | 2.55 | 2.60 | 2.68 | 2.76 | 2.70 | 2.75 | 2.84 | 2.92 | 2.83 | 2.89 | 2.97 | 3.07 | 2.94 | 3.00 | 3.09 | 3.19 | 3.03 | 3.10 | 3.19 | 3.30 |
| | | Amps | 8.3 | 8.5 | 8.7 | 8.9 | 8.8 | 9.0 | 9.2 | 9.5 | 9.4 | 9.5 | 9.8 | 10.1 | 9.9 | 10.0 | 10.3 | 10.6 | 10.3 | 10.5 | 10.8 | 11.1 | 10.8 | 11.0 | 11.3 | 11.7 |
| | | HI PR | 214 | 230 | 243 | 254 | 240 | 258 | 273 | 285 | 273 | 294 | 310 | 324 | 311 | 335 | 353 | 369 | 350 | 376 | 398 | 415 | 387 | 416 | 439 | 458 |
| | | LO PR | 104 | 111 | 121 | 129 | 110 | 117 | 128 | 136 | 114 | 121 | 133 | 141 | 120 | 128 | 139 | 148 | 126 | 134 | 146 | 155 | 130 | 138 | 151 | 161 |

IDB = Entering Indoor Dry Bulb Temperature
High and low pressures are measured at the liquid and suction service valves.

Shaded area reflects ACCA (TVA) Rating conditions

kW = Total system power
Amps = outdoor unit amps (comp.+fan)

# Expanded Cooling Data — CPG036B (cont.)

| | | | Outdoor Ambient Temperature | | | | | | | | | | | | | | | | | | | | | | | |
|---|---|---|---|---|---|---|---|---|---|---|---|---|---|---|---|---|---|---|---|---|---|---|---|---|---|---|
| | | | 65 | | | | 75 | | | | 85 | | | | 95 | | | | 105 | | | | 115 | | | |
| | | | Entering Indoor Wet Bulb Temperature | | | | | | | | | | | | | | | | | | | | | | | |
| IDB | Airflow | | 59 | 63 | 67 | 71 | 59 | 63 | 67 | 71 | 59 | 63 | 67 | 71 | 59 | 63 | 67 | 71 | 59 | 63 | 67 | 71 | 59 | 63 | 67 | 71 |
| 80 | 1350 | MBh | 35.1 | 35.9 | 38.3 | 41.0 | 34.3 | 35.0 | 37.4 | 40.0 | 33.5 | 34.2 | 36.5 | 39.0 | 32.6 | 33.4 | 35.6 | 38.1 | 31.0 | 31.7 | 33.9 | 36.2 | 28.7 | 29.4 | 31.4 | 33.5 |
| | | S/T | 0.90 | 0.85 | 0.69 | 0.51 | 0.93 | 0.88 | 0.71 | 0.53 | 0.96 | 0.90 | 0.73 | 0.55 | 1.00 | 0.93 | 0.75 | 0.56 | 1.00 | 0.96 | 0.78 | 0.59 | 1.00 | 0.97 | 0.79 | 0.59 |
| | | ΔT | 22 | 21 | 18 | 14 | 22 | 21 | 18 | 15 | 22 | 21 | 18 | 15 | 22 | 21 | 18 | 15 | 21 | 21 | 18 | 14 | 20 | 19 | 17 | 13 |
| | | kW | 2.47 | 2.52 | 2.60 | 2.67 | 2.65 | 2.70 | 2.78 | 2.87 | 2.80 | 2.86 | 2.95 | 3.04 | 2.94 | 3.00 | 3.09 | 3.19 | 3.06 | 3.12 | 3.22 | 3.32 | 3.16 | 3.22 | 3.33 | 3.43 |
| | | Amps | 8.6 | 8.8 | 9.0 | 9.2 | 9.1 | 9.3 | 9.5 | 9.8 | 9.7 | 9.9 | 10.1 | 10.4 | 10.2 | 10.4 | 10.7 | 11.0 | 10.7 | 10.9 | 11.2 | 11.6 | 11.2 | 11.4 | 11.7 | 12.1 |
| | | HI PR | 225 | 242 | 256 | 267 | 253 | 272 | 287 | 299 | 287 | 309 | 326 | 340 | 327 | 352 | 372 | 388 | 368 | 396 | 418 | 436 | 407 | 438 | 462 | 482 |
| | | LO PR | 109 | 116 | 127 | 135 | 116 | 123 | 134 | 143 | 120 | 128 | 139 | 148 | 126 | 134 | 146 | 156 | 132 | 141 | 153 | 163 | 137 | 145 | 159 | 169 |
| | 1200 | MBh | 34.1 | 34.8 | 37.2 | 39.8 | 33.3 | 34.0 | 36.3 | 38.8 | 32.5 | 33.2 | 35.5 | 37.9 | 31.7 | 32.4 | **34.6** | 37.0 | 30.1 | 30.8 | 32.9 | 35.1 | 27.9 | 28.5 | 30.4 | 32.5 |
| | | S/T | 0.86 | 0.81 | 0.66 | 0.49 | 0.89 | 0.84 | 0.68 | 0.51 | 0.91 | 0.86 | 0.70 | 0.52 | 0.94 | 0.88 | **0.72** | 0.54 | 0.98 | 0.92 | 0.75 | 0.56 | 0.99 | 0.93 | 0.75 | 0.56 |
| | | ΔT | 22 | 22 | 19 | 15 | 23 | 22 | 19 | 15 | 23 | 22 | 19 | 15 | 23 | 22 | **19** | 15 | 23 | 22 | 19 | 15 | 21 | 20 | 18 | 14 |
| | | kW | 2.46 | 2.50 | 2.58 | 2.65 | 2.63 | 2.68 | 2.76 | 2.85 | 2.78 | 2.84 | 2.93 | 3.02 | 2.92 | 2.98 | **3.07** | 3.17 | 3.03 | 3.10 | 3.19 | 3.29 | 3.13 | 3.20 | 3.30 | 3.40 |
| | | Amps | 8.6 | 8.7 | 8.9 | 9.2 | 9.1 | 9.2 | 9.5 | 9.7 | 9.6 | 9.8 | 10.1 | 10.4 | 10.1 | 10.3 | **10.6** | 10.9 | 10.6 | 10.8 | 11.1 | 11.5 | 11.1 | 11.4 | 11.7 | 12.0 |
| | | HI PR | 223 | 240 | 253 | 264 | 250 | 269 | 284 | 296 | 284 | 306 | 323 | 337 | 324 | 348 | **368** | 384 | 364 | 392 | 414 | 432 | 403 | 433 | 457 | 477 |
| | | LO PR | 108 | 115 | 126 | 134 | 114 | 122 | 133 | 141 | 119 | 126 | 138 | 147 | 125 | 133 | **145** | 154 | 131 | 139 | 152 | 162 | 135 | 144 | 157 | 167 |
| | 1050 | MBh | 31.4 | 32.1 | 34.3 | 36.7 | 30.7 | 31.4 | 33.5 | 35.8 | 30.0 | 30.6 | 32.7 | 35.0 | 29.3 | 29.9 | 31.9 | 34.1 | 27.8 | 28.4 | 30.3 | 32.4 | 25.7 | 26.3 | 28.1 | 30.0 |
| | | S/T | 0.83 | 0.78 | 0.63 | 0.47 | 0.86 | 0.81 | 0.66 | 0.49 | 0.88 | 0.83 | 0.67 | 0.50 | 0.91 | 0.85 | 0.69 | 0.52 | 0.94 | 0.89 | 0.72 | 0.54 | 0.95 | 0.89 | 0.73 | 0.54 |
| | | ΔT | 23 | 22 | 19 | 15 | 23 | 22 | 19 | 15 | 23 | 22 | 19 | 15 | 23 | 22 | 19 | 16 | 23 | 22 | 19 | 15 | 21 | 21 | 18 | 14 |
| | | kW | 2.40 | 2.45 | 2.52 | 2.59 | 2.57 | 2.62 | 2.70 | 2.78 | 2.72 | 2.77 | 2.86 | 2.95 | 2.85 | 2.91 | 3.00 | 3.09 | 2.96 | 3.02 | 3.12 | 3.22 | 3.06 | 3.12 | 3.22 | 3.32 |
| | | Amps | 8.4 | 8.5 | 8.7 | 9.0 | 8.9 | 9.0 | 9.3 | 9.5 | 9.4 | 9.6 | 9.9 | 10.1 | 9.9 | 10.1 | 10.4 | 10.7 | 10.4 | 10.6 | 10.9 | 11.2 | 10.9 | 11.1 | 11.4 | 11.7 |
| | | HI PR | 216 | 233 | 246 | 256 | 243 | 261 | 276 | 287 | 276 | 297 | 313 | 327 | 314 | 338 | 357 | 372 | 353 | 380 | 402 | 419 | 390 | 420 | 444 | 463 |
| | | LO PR | 105 | 112 | 122 | 130 | 111 | 118 | 129 | 137 | 115 | 123 | 134 | 143 | 121 | 129 | 141 | 150 | 127 | 135 | 147 | 157 | 131 | 140 | 152 | 162 |
| 85 | 1350 | MBh | 35.7 | 36.4 | 38.1 | 40.7 | 34.9 | 35.6 | 37.2 | 39.7 | 34.0 | 34.7 | 36.3 | 38.8 | 33.2 | 33.9 | 35.5 | 37.8 | 31.6 | 32.2 | 33.7 | 35.9 | 29.2 | 29.8 | 31.2 | 33.3 |
| | | S/T | 0.95 | 0.91 | 0.82 | 0.67 | 0.98 | 0.95 | 0.85 | 0.69 | 1.00 | 0.97 | 0.87 | 0.71 | 1.00 | 1.00 | 0.90 | 0.73 | 1.00 | 1.00 | 0.94 | 0.76 | 1.00 | 1.00 | 0.94 | 0.77 |
| | | ΔT | 23 | 23 | 21 | 18 | 23 | 23 | 22 | 19 | 23 | 23 | 22 | 19 | 23 | 23 | 22 | 19 | 21 | 22 | 21 | 19 | 20 | 20 | 20 | 17 |
| | | kW | 2.49 | 2.54 | 2.61 | 2.69 | 2.67 | 2.72 | 2.80 | 2.89 | 2.83 | 2.88 | 2.97 | 3.06 | 2.96 | 3.03 | 3.12 | 3.22 | 3.08 | 3.15 | 3.24 | 3.35 | 3.18 | 3.25 | 3.35 | 3.46 |
| | | Amps | 8.7 | 8.8 | 9.0 | 9.3 | 9.2 | 9.4 | 9.6 | 9.9 | 9.8 | 10.0 | 10.2 | 10.5 | 10.3 | 10.5 | 10.8 | 11.1 | 10.8 | 11.0 | 11.3 | 11.6 | 11.3 | 11.5 | 11.8 | 12.2 |
| | | HI PR | 227 | 245 | 258 | 269 | 255 | 274 | 290 | 302 | 290 | 312 | 330 | 344 | 330 | 356 | 375 | 392 | 372 | 400 | 422 | 440 | 411 | 442 | 467 | 487 |
| | | LO PR | 110 | 117 | 128 | 137 | 117 | 124 | 135 | 144 | 121 | 129 | 141 | 150 | 127 | 135 | 148 | 158 | 133 | 142 | 155 | 165 | 138 | 147 | 160 | 171 |
| | 1200 | MBh | 34.7 | 35.3 | 37.0 | 39.5 | 33.9 | 34.5 | 36.1 | 38.6 | 33.1 | 33.7 | 35.3 | 37.6 | 32.2 | 32.9 | 34.4 | 36.7 | 30.6 | 31.2 | 32.7 | 34.9 | 28.4 | 28.9 | 30.3 | 32.3 |
| | | S/T | 0.90 | 0.87 | 0.79 | 0.64 | 0.93 | 0.90 | 0.81 | 0.66 | 0.96 | 0.92 | 0.83 | 0.68 | 0.99 | 0.95 | 0.86 | 0.70 | 1.00 | 0.99 | 0.89 | 0.73 | 1.00 | 1.00 | 0.90 | 0.73 |
| | | ΔT | 24 | 24 | 22 | 19 | 24 | 24 | 23 | 20 | 24 | 24 | 23 | 20 | 24 | 24 | 23 | 20 | 23 | 24 | 22 | 19 | 22 | 22 | 21 | 18 |
| | | kW | 2.47 | 2.52 | 2.60 | 2.67 | 2.65 | 2.70 | 2.78 | 2.87 | 2.80 | 2.86 | 2.95 | 3.04 | 2.94 | 3.00 | 3.09 | 3.19 | 3.06 | 3.12 | 3.22 | 3.32 | 3.16 | 3.22 | 3.33 | 3.43 |
| | | Amps | 8.6 | 8.8 | 9.0 | 9.2 | 9.1 | 9.3 | 9.5 | 9.8 | 9.7 | 9.9 | 10.1 | 10.4 | 10.2 | 10.4 | 10.7 | 11.0 | 10.7 | 10.9 | 11.2 | 11.6 | 11.2 | 11.4 | 11.7 | 12.1 |
| | | HI PR | 225 | 242 | 256 | 267 | 253 | 272 | 287 | 299 | 287 | 309 | 326 | 340 | 327 | 352 | 372 | 388 | 368 | 396 | 418 | 436 | 407 | 438 | 462 | 482 |
| | | LO PR | 109 | 116 | 127 | 135 | 116 | 123 | 134 | 143 | 120 | 128 | 139 | 148 | 126 | 134 | 146 | 156 | 132 | 141 | 153 | 163 | 137 | 145 | 159 | 169 |
| | 1050 | MBh | 32.0 | 32.6 | 34.2 | 36.4 | 31.3 | 31.9 | 33.4 | 35.6 | 30.5 | 31.1 | 32.6 | 34.7 | 29.8 | 30.3 | 31.8 | 33.9 | 28.3 | 28.8 | 30.2 | 32.2 | 26.2 | 26.7 | 28.0 | 29.8 |
| | | S/T | 0.87 | 0.84 | 0.76 | 0.61 | 0.90 | 0.87 | 0.78 | 0.64 | 0.92 | 0.89 | 0.80 | 0.65 | 0.95 | 0.92 | 0.83 | 0.67 | 0.99 | 0.95 | 0.86 | 0.70 | 1.00 | 0.96 | 0.87 | 0.71 |
| | | ΔT | 24 | 24 | 23 | 20 | 25 | 24 | 23 | 20 | 25 | 24 | 23 | 20 | 25 | 24 | 23 | 20 | 25 | 24 | 23 | 20 | 23 | 23 | 21 | 18 |
| | | kW | 2.42 | 2.47 | 2.54 | 2.61 | 2.59 | 2.64 | 2.72 | 2.80 | 2.74 | 2.80 | 2.88 | 2.97 | 2.87 | 2.93 | 3.02 | 3.12 | 2.99 | 3.05 | 3.14 | 3.24 | 3.08 | 3.15 | 3.25 | 3.35 |
| | | Amps | 8.5 | 8.6 | 8.8 | 9.0 | 8.9 | 9.1 | 9.3 | 9.6 | 9.5 | 9.7 | 9.9 | 10.2 | 10.0 | 10.2 | 10.4 | 10.8 | 10.5 | 10.7 | 11.0 | 11.3 | 11.0 | 11.2 | 11.5 | 11.8 |
| | | HI PR | 218 | 235 | 248 | 259 | 245 | 264 | 278 | 290 | 279 | 300 | 317 | 330 | 317 | 341 | 361 | 376 | 357 | 384 | 406 | 423 | 394 | 424 | 448 | 467 |
| | | LO PR | 106 | 113 | 123 | 131 | 112 | 119 | 130 | 139 | 116 | 124 | 135 | 144 | 122 | 130 | 142 | 151 | 128 | 136 | 149 | 159 | 133 | 141 | 154 | 164 |

IDB = Entering Indoor Dry Bulb Temperature
High and low pressures are measured at the liquid and suction service valves.

Shaded area reflects AHRI (TVA) Rating conditions

kW = Total system power
Amps = outdoor unit amps (comp.+fan)

# Expanded Cooling Data — CPG048B

| | | | Outdoor Ambient Temperature | | | | | | | | | | | | | | | | | | | | | | | |
|---|---|---|---|---|---|---|---|---|---|---|---|---|---|---|---|---|---|---|---|---|---|---|---|---|---|---|
| | | | 65 | | | | 75 | | | | 85 | | | | 95 | | | | 105 | | | | 115 | | | |
| | | | Entering Indoor Wet Bulb Temperature | | | | | | | | | | | | | | | | | | | | | | | |
| IDB | Airflow | | 59 | 63 | 67 | 71 | 59 | 63 | 67 | 71 | 59 | 63 | 67 | 71 | 59 | 63 | 67 | 71 | 59 | 63 | 67 | 71 | 59 | 63 | 67 | 71 |
| 70 | 1800 | MBh | 44.6 | 46.2 | 50.6 | - | 43.5 | 45.1 | 49.5 | - | 42.5 | 44.1 | 48.3 | - | 41.5 | 43.0 | 47.1 | - | 39.4 | 40.8 | 44.7 | - | 36.5 | 37.8 | 41.4 | - |
| | | S/T | 0.74 | 0.62 | 0.43 | - | 0.77 | 0.64 | 0.44 | - | 0.79 | 0.66 | 0.45 | - | 0.81 | 0.68 | 0.47 | - | 0.84 | 0.70 | 0.49 | - | 0.85 | 0.71 | 0.49 | - |
| | | ΔT | 17 | 15 | 11 | - | 17 | 15 | 11 | - | 17 | 15 | 11 | - | 17 | 15 | 11 | - | 17 | 15 | 11 | - | 16 | 14 | 10 | - |
| | | kW | 3.13 | 3.19 | 3.29 | - | 3.36 | 3.43 | 3.53 | - | 3.56 | 3.63 | 3.75 | - | 3.74 | 3.82 | 3.94 | - | 3.89 | 3.97 | 4.10 | - | 4.02 | 4.10 | 4.23 | - |
| | | Amps | 10.2 | 10.4 | 10.6 | - | 10.8 | 11.0 | 11.3 | - | 11.5 | 11.7 | 12.0 | - | 12.1 | 12.3 | 12.6 | - | 12.7 | 12.9 | 13.3 | - | 13.3 | 13.5 | 13.9 | - |
| | | HI PR | 239 | 257 | 271 | - | 268 | 288 | 304 | - | 305 | 328 | 346 | - | 347 | 373 | 394 | - | 390 | 420 | 444 | - | 431 | 464 | 490 | - |
| | | LO PR | 110 | 117 | 128 | - | 116 | 124 | 135 | - | 121 | 129 | 141 | - | 127 | 135 | 148 | - | 133 | 142 | 155 | - | 138 | 147 | 160 | - |
| | 1600 | MBh | 43.3 | 44.9 | 49.2 | - | 42.3 | 43.8 | 48.0 | - | 41.3 | 42.8 | 46.9 | - | 40.3 | 41.7 | 45.7 | - | 38.3 | 39.6 | 43.4 | - | 35.4 | 36.7 | 40.2 | - |
| | | S/T | 0.70 | 0.59 | 0.41 | - | 0.73 | 0.61 | 0.42 | - | 0.75 | 0.63 | 0.43 | - | 0.77 | 0.65 | 0.45 | - | 0.80 | 0.67 | 0.46 | - | 0.81 | 0.68 | 0.47 | - |
| | | ΔT | 18 | 15 | 12 | - | 18 | 15 | 12 | - | 18 | 15 | 12 | - | 18 | 15 | 12 | - | 18 | 15 | 12 | - | 16 | 14 | 11 | - |
| | | kW | 3.11 | 3.17 | 3.27 | - | 3.33 | 3.40 | 3.51 | - | 3.53 | 3.61 | 3.72 | - | 3.71 | 3.79 | 3.90 | - | 3.86 | 3.94 | 4.06 | - | 3.99 | 4.07 | 4.20 | - |
| | | Amps | 10.1 | 10.3 | 10.6 | - | 10.7 | 10.9 | 11.2 | - | 11.4 | 11.6 | 11.9 | - | 12.0 | 12.2 | 12.5 | - | 12.6 | 12.8 | 13.2 | - | 13.2 | 13.4 | 13.8 | - |
| | | HI PR | 236 | 254 | 269 | - | 265 | 285 | 301 | - | 302 | 325 | 343 | - | 344 | 370 | 390 | - | 386 | 416 | 439 | - | 427 | 460 | 485 | - |
| | | LO PR | 109 | 116 | 127 | - | 115 | 123 | 134 | - | 120 | 128 | 139 | - | 126 | 134 | 146 | - | 132 | 140 | 153 | - | 136 | 145 | 158 | - |
| | 1400 | MBh | 40.0 | 41.4 | 45.4 | - | 39.0 | 40.4 | 44.3 | - | 38.1 | 39.5 | 43.3 | - | 37.2 | 38.5 | 42.2 | - | 35.3 | 36.6 | 40.1 | - | 32.7 | 33.9 | 37.1 | - |
| | | S/T | 0.68 | 0.57 | 0.39 | - | 0.70 | 0.59 | 0.41 | - | 0.72 | 0.60 | 0.42 | - | 0.75 | 0.62 | 0.43 | - | 0.77 | 0.65 | 0.45 | - | 0.78 | 0.65 | 0.45 | - |
| | | ΔT | 18 | 15 | 12 | - | 18 | 16 | 12 | - | 18 | 16 | 12 | - | 18 | 16 | 12 | - | 18 | 16 | 12 | - | 17 | 15 | 11 | - |
| | | kW | 3.04 | 3.10 | 3.19 | - | 3.26 | 3.32 | 3.42 | - | 3.45 | 3.52 | 3.63 | - | 3.62 | 3.70 | 3.81 | - | 3.76 | 3.84 | 3.97 | - | 3.89 | 3.97 | 4.10 | - |
| | | Amps | 9.9 | 10.1 | 10.3 | - | 10.5 | 10.7 | 11.0 | - | 11.2 | 11.4 | 11.7 | - | 11.7 | 12.0 | 12.3 | - | 12.3 | 12.6 | 12.9 | - | 12.9 | 13.1 | 13.5 | - |
| | | HI PR | 229 | 247 | 261 | - | 257 | 277 | 292 | - | 293 | 315 | 332 | - | 333 | 359 | 379 | - | 375 | 403 | 426 | - | 414 | 446 | 471 | - |
| | | LO PR | 106 | 113 | 123 | - | 112 | 119 | 130 | - | 116 | 124 | 135 | - | 122 | 130 | 142 | - | 128 | 136 | 149 | - | 132 | 141 | 154 | - |
| 75 | 1800 | MBh | 45.3 | 46.7 | 50.5 | 54.2 | 44.3 | 45.6 | 49.4 | 53.0 | 43.2 | 44.5 | 48.2 | 51.7 | 42.2 | 43.4 | 47.0 | 50.4 | 40.1 | 41.3 | 44.7 | 47.9 | 37.1 | 38.2 | 41.4 | 44.4 |
| | | S/T | 0.84 | 0.75 | 0.57 | 0.37 | 0.87 | 0.78 | 0.59 | 0.38 | 0.89 | 0.80 | 0.60 | 0.39 | 0.92 | 0.82 | 0.62 | 0.40 | 0.96 | 0.86 | 0.65 | 0.42 | 0.96 | 0.86 | 0.65 | 0.42 |
| | | ΔT | 19 | 18 | 15 | 10 | 20 | 18 | 15 | 10 | 20 | 18 | 15 | 10 | 20 | 18 | 15 | 10 | 20 | 18 | 15 | 10 | 18 | 17 | 14 | 10 |
| | | kW | 3.16 | 3.22 | 3.32 | 3.42 | 3.39 | 3.46 | 3.56 | 3.67 | 3.59 | 3.66 | 3.78 | 3.90 | 3.77 | 3.85 | 3.97 | 4.09 | 3.92 | 4.00 | 4.13 | 4.26 | 4.05 | 4.14 | 4.27 | 4.41 |
| | | Amps | 10.3 | 10.4 | 10.7 | 11.0 | 10.9 | 11.1 | 11.3 | 11.7 | 11.6 | 11.8 | 12.1 | 12.4 | 12.2 | 12.4 | 12.7 | 13.1 | 12.8 | 13.0 | 13.4 | 13.8 | 13.4 | 13.6 | 14.0 | 14.4 |
| | | HI PR | 241 | 260 | 274 | 286 | 271 | 291 | 307 | 321 | 308 | 331 | 350 | 365 | 351 | 377 | 398 | 415 | 394 | 424 | 448 | 467 | 436 | 469 | 495 | 516 |
| | | LO PR | 111 | 118 | 129 | 138 | 118 | 125 | 137 | 146 | 122 | 130 | 142 | 151 | 128 | 137 | 149 | 159 | 135 | 143 | 156 | 167 | 139 | 148 | 162 | 172 |
| | 1600 | MBh | 44.0 | 45.3 | 49.1 | 52.7 | 43.0 | 44.3 | 47.9 | 51.4 | 42.0 | 43.2 | 46.8 | 50.2 | 41.0 | **42.2** | 45.6 | 49.0 | 38.9 | 40.1 | 43.4 | 46.5 | 36.0 | 37.1 | 40.2 | 43.1 |
| | | S/T | 0.80 | 0.72 | 0.54 | 0.35 | 0.83 | 0.74 | 0.56 | 0.36 | 0.85 | 0.76 | 0.58 | 0.37 | 0.88 | **0.79** | 0.59 | 0.38 | 0.91 | 0.82 | 0.62 | 0.40 | 0.92 | 0.82 | 0.62 | 0.40 |
| | | ΔT | 20 | 19 | 15 | 11 | 21 | 19 | 15 | 11 | 21 | 19 | 15 | 11 | 21 | **19** | 16 | 11 | 20 | 19 | 15 | 11 | 19 | 18 | 14 | 10 |
| | | kW | 3.13 | 3.20 | 3.29 | 3.39 | 3.36 | 3.43 | 3.53 | 3.64 | 3.56 | 3.63 | 3.75 | 3.87 | 3.74 | **3.82** | 3.94 | 4.06 | 3.89 | 3.97 | 4.10 | 4.23 | 4.02 | 4.10 | 4.24 | 4.37 |
| | | Amps | 10.2 | 10.4 | 10.6 | 10.9 | 10.8 | 11.0 | 11.3 | 11.6 | 11.5 | 11.7 | 12.0 | 12.3 | 12.1 | **12.3** | 12.6 | 13.0 | 12.7 | 12.9 | 13.3 | 13.7 | 13.3 | 13.5 | 13.9 | 14.3 |
| | | HI PR | 239 | 257 | 271 | 283 | 268 | 288 | 304 | 318 | 305 | 328 | 346 | 361 | 347 | **373** | 394 | 411 | 390 | 420 | 444 | 463 | 431 | 464 | 490 | 511 |
| | | LO PR | 110 | 117 | 128 | 136 | 116 | 124 | 135 | 144 | 121 | 129 | 141 | 150 | 127 | **135** | 148 | 157 | 133 | 142 | 155 | 165 | 138 | 147 | 160 | 171 |
| | 1400 | MBh | 40.6 | 41.8 | 45.3 | 48.6 | 39.7 | 40.9 | 44.2 | 47.5 | 38.7 | 39.9 | 43.2 | 46.3 | 37.8 | 38.9 | 42.1 | 45.2 | 35.9 | 37.0 | 40.0 | 42.9 | 33.3 | 34.2 | 37.1 | 39.8 |
| | | S/T | 0.77 | 0.69 | 0.52 | 0.34 | 0.80 | 0.72 | 0.54 | 0.35 | 0.82 | 0.73 | 0.56 | 0.36 | 0.85 | 0.76 | 0.57 | 0.37 | 0.88 | 0.79 | 0.60 | 0.38 | 0.89 | 0.79 | 0.60 | 0.39 |
| | | ΔT | 21 | 19 | 16 | 11 | 21 | 19 | 16 | 11 | 21 | 19 | 16 | 11 | 21 | 19 | 16 | 11 | 21 | 19 | 16 | 11 | 19 | 18 | 15 | 10 |
| | | kW | 3.06 | 3.12 | 3.22 | 3.31 | 3.28 | 3.35 | 3.45 | 3.56 | 3.48 | 3.55 | 3.66 | 3.77 | 3.65 | 3.73 | 3.84 | 3.96 | 3.80 | 3.88 | 4.00 | 4.13 | 3.92 | 4.00 | 4.13 | 4.27 |
| | | Amps | 10.0 | 10.2 | 10.4 | 10.7 | 10.6 | 10.8 | 11.0 | 11.3 | 11.3 | 11.5 | 11.7 | 12.1 | 11.8 | 12.1 | 12.4 | 12.7 | 12.4 | 12.6 | 13.0 | 13.4 | 13.0 | 13.2 | 13.6 | 14.0 |
| | | HI PR | 232 | 249 | 263 | 275 | 260 | 280 | 295 | 308 | 296 | 318 | 336 | 350 | 337 | 362 | 383 | 399 | 379 | 408 | 430 | 449 | 418 | 450 | 475 | 496 |
| | | LO PR | 107 | 114 | 124 | 132 | 113 | 120 | 131 | 140 | 117 | 125 | 136 | 145 | 123 | 131 | 143 | 153 | 129 | 138 | 150 | 160 | 134 | 142 | 155 | 165 |

IDB = Entering Indoor Dry Bulb Temperature

High and low pressures are measured at the liquid and suction service valves.

Shaded area reflects ACCA (TVA) Rating conditions

kW = Total system power

Amps = outdoor unit amps (comp.+fan)

# Expanded Cooling Data — CPG048B (cont.)

| | | | Outdoor Ambient Temperature | | | | | | | | | | | | | | | | | | | | | | | |
|---|---|---|---|---|---|---|---|---|---|---|---|---|---|---|---|---|---|---|---|---|---|---|---|---|---|---|
| | | | 65 | | | | 75 | | | | 85 | | | | 95 | | | | 105 | | | | 115 | | | |
| | | | Entering Indoor Wet Bulb Temperature | | | | | | | | | | | | | | | | | | | | | | | |
| IDB | Airflow | | 59 | 63 | 67 | 71 | 59 | 63 | 67 | 71 | 59 | 63 | 67 | 71 | 59 | 63 | 67 | 71 | 59 | 63 | 67 | 71 | 59 | 63 | 67 | 71 |
| 80 | 1800 | MBh | 46.1 | 47.2 | 50.4 | 53.9 | 45.1 | 46.1 | 49.2 | 52.6 | 44.0 | 45.0 | 48.0 | 51.4 | 42.9 | 43.9 | 46.9 | 50.1 | 40.8 | 41.7 | 44.5 | 47.6 | 37.8 | 38.6 | 41.2 | 44.1 |
| | | S/T | 0.92 | 0.86 | 0.70 | 0.53 | 0.95 | 0.90 | 0.73 | 0.54 | 1.00 | 0.92 | 0.75 | 0.56 | 1.00 | 0.95 | 0.77 | 0.58 | 1.00 | 1.00 | 0.80 | 0.60 | 1.00 | 1.00 | 0.81 | 0.60 |
| | | ΔT | 22 | 21 | 18 | 14 | 22 | 21 | 18 | 15 | 22 | 21 | 18 | 15 | 22 | 21 | 18 | 15 | 21 | 21 | 18 | 15 | 19 | 20 | 17 | 14 |
| | | kW | 3.18 | 3.24 | 3.34 | 3.44 | 3.41 | 3.48 | 3.59 | 3.70 | 3.62 | 3.69 | 3.81 | 3.93 | 3.80 | 3.88 | 4.00 | 4.13 | 3.95 | 4.04 | 4.16 | 4.30 | 4.08 | 4.17 | 4.31 | 4.45 |
| | | Amps | 10.3 | 10.5 | 10.8 | 11.1 | 10.9 | 11.1 | 11.4 | 11.7 | 11.7 | 11.9 | 12.2 | 12.5 | 12.3 | 12.5 | 12.8 | 13.2 | 12.9 | 13.1 | 13.5 | 13.9 | 13.5 | 13.7 | 14.1 | 14.5 |
| | | HI PR | 244 | 262 | 277 | 289 | 273 | 294 | 311 | 324 | 311 | 335 | 353 | 368 | 354 | 381 | 402 | 420 | 398 | 429 | 453 | 472 | 440 | 474 | 500 | 522 |
| | | LO PR | 112 | 120 | 131 | 139 | 119 | 126 | 138 | 147 | 124 | 131 | 143 | 153 | 130 | 138 | 151 | 160 | 136 | 145 | 158 | 168 | 141 | 150 | 163 | 174 |
| | 1600 | MBh | 44.8 | 45.8 | 48.9 | 52.3 | 43.8 | 44.7 | 47.8 | 51.1 | 42.7 | 43.7 | 46.6 | 49.9 | 41.7 | 42.6 | **45.5** | 48.6 | 39.6 | 40.5 | 43.2 | 46.2 | 36.7 | 37.5 | 40.0 | 42.8 |
| | | S/T | 0.88 | 0.82 | 0.67 | 0.50 | 0.91 | 0.85 | 0.70 | 0.52 | 0.93 | 0.88 | 0.71 | 0.53 | 0.96 | 0.90 | **0.74** | 0.55 | 1.00 | 0.94 | 0.76 | 0.57 | 1.00 | 0.95 | 0.77 | 0.58 |
| | | ΔT | 23 | 22 | 19 | 15 | 23 | 22 | 19 | 15 | 23 | 22 | 19 | 15 | 23 | 22 | **19** | 15 | 23 | 22 | 19 | 15 | 21 | 20 | 18 | 14 |
| | | kW | 3.16 | 3.22 | 3.32 | 3.42 | 3.39 | 3.46 | 3.56 | 3.67 | 3.59 | 3.66 | 3.78 | 3.90 | 3.77 | 3.85 | **3.97** | 4.10 | 3.92 | 4.00 | 4.13 | 4.26 | 4.05 | 4.14 | 4.27 | 4.41 |
| | | Amps | 10.3 | 10.4 | 10.7 | 11.0 | 10.9 | 11.1 | 11.3 | 11.7 | 11.6 | 11.8 | 12.1 | 12.4 | 12.2 | 12.4 | **12.7** | 13.1 | 12.8 | 13.0 | 13.4 | 13.8 | 13.4 | 13.6 | 14.0 | 14.4 |
| | | HI PR | 241 | 260 | 274 | 286 | 271 | 291 | 308 | 321 | 308 | 331 | 350 | 365 | 351 | 377 | **398** | 415 | 394 | 424 | 448 | 467 | 436 | 469 | 495 | 516 |
| | | LO PR | 111 | 118 | 129 | 138 | 118 | 125 | 137 | 146 | 122 | 130 | 142 | 151 | 128 | 137 | **149** | 159 | 135 | 143 | 156 | 167 | 139 | 148 | 162 | 172 |
| | 1400 | MBh | 41.4 | 42.3 | 45.1 | 48.3 | 40.4 | 41.3 | 44.1 | 47.1 | 39.4 | 40.3 | 43.0 | 46.0 | 38.5 | 39.3 | 42.0 | 44.9 | 36.5 | 37.3 | 39.9 | 42.6 | 33.9 | 34.6 | 37.0 | 39.5 |
| | | S/T | 0.85 | 0.79 | 0.65 | 0.48 | 0.88 | 0.82 | 0.67 | 0.50 | 0.90 | 0.84 | 0.69 | 0.51 | 0.93 | 0.87 | 0.71 | 0.53 | 0.96 | 0.90 | 0.74 | 0.55 | 0.97 | 0.91 | 0.74 | 0.55 |
| | | ΔT | 23 | 22 | 19 | 15 | 23 | 22 | 19 | 16 | 23 | 22 | 19 | 16 | 23 | 22 | 20 | 16 | 23 | 22 | 19 | 15 | 22 | 21 | 18 | 14 |
| | | kW | 3.09 | 3.15 | 3.24 | 3.34 | 3.31 | 3.38 | 3.48 | 3.59 | 3.50 | 3.58 | 3.69 | 3.80 | 3.68 | 3.76 | 3.87 | 4.00 | 3.83 | 3.91 | 4.03 | 4.16 | 3.95 | 4.04 | 4.17 | 4.30 |
| | | Amps | 10.1 | 10.2 | 10.5 | 10.8 | 10.7 | 10.8 | 11.1 | 11.4 | 11.3 | 11.5 | 11.8 | 12.2 | 11.9 | 12.1 | 12.4 | 12.8 | 12.5 | 12.7 | 13.1 | 13.5 | 13.1 | 13.3 | 13.7 | 14.1 |
| | | HI PR | 234 | 252 | 266 | 277 | 263 | 282 | 298 | 311 | 299 | 321 | 339 | 354 | 340 | 366 | 386 | 403 | 383 | 412 | 435 | 453 | 423 | 455 | 480 | 501 |
| | | LO PR | 108 | 115 | 125 | 134 | 114 | 121 | 133 | 141 | 119 | 126 | 138 | 147 | 125 | 133 | 145 | 154 | 131 | 139 | 152 | 162 | 135 | 144 | 157 | 167 |
| 85 | 1800 | MBh | 47.0 | 47.9 | 50.1 | 53.5 | 45.9 | 46.7 | 49.0 | 52.2 | 44.8 | 45.6 | 47.8 | 51.0 | 43.7 | 44.5 | 46.6 | 49.7 | 41.5 | 42.3 | 44.3 | 47.3 | 38.4 | 39.2 | 41.0 | 43.8 |
| | | S/T | 0.97 | 0.93 | 0.84 | 0.68 | 1.00 | 0.97 | 0.87 | 0.71 | 1.00 | 0.99 | 0.89 | 0.73 | 1.00 | 1.00 | 0.92 | 0.75 | 1.00 | 1.00 | 0.96 | 0.78 | 1.00 | 1.00 | 0.97 | 0.78 |
| | | ΔT | 23 | 23 | 22 | 19 | 23 | 23 | 22 | 19 | 23 | 23 | 22 | 19 | 22 | 23 | 22 | 19 | 21 | 22 | 22 | 19 | 20 | 20 | 20 | 18 |
| | | kW | 3.20 | 3.27 | 3.37 | 3.47 | 3.44 | 3.51 | 3.62 | 3.73 | 3.65 | 3.72 | 3.84 | 3.96 | 3.83 | 3.91 | 4.03 | 4.16 | 3.98 | 4.07 | 4.20 | 4.33 | 4.12 | 4.21 | 4.34 | 4.48 |
| | | Amps | 10.4 | 10.6 | 10.8 | 11.1 | 11.0 | 11.2 | 11.5 | 11.8 | 11.7 | 11.9 | 12.3 | 12.6 | 12.3 | 12.6 | 12.9 | 13.3 | 13.0 | 13.2 | 13.6 | 14.0 | 13.6 | 13.8 | 14.2 | 14.6 |
| | | HI PR | 246 | 265 | 280 | 292 | 276 | 297 | 314 | 327 | 314 | 338 | 357 | 372 | 358 | 385 | 406 | 424 | 402 | 433 | 457 | 477 | 444 | 478 | 505 | 527 |
| | | LO PR | 114 | 121 | 132 | 141 | 120 | 128 | 139 | 148 | 125 | 133 | 145 | 154 | 131 | 139 | 152 | 162 | 137 | 146 | 160 | 170 | 142 | 151 | 165 | 176 |
| | 1600 | MBh | 45.6 | 46.5 | 48.7 | 51.9 | 44.5 | 45.4 | 47.5 | 50.7 | 43.5 | 44.3 | 46.4 | 49.5 | 42.4 | 43.2 | 45.3 | 48.3 | 40.3 | 41.1 | 43.0 | 45.9 | 37.3 | 38.0 | 39.8 | 42.5 |
| | | S/T | 0.92 | 0.89 | 0.80 | 0.65 | 0.95 | 0.92 | 0.83 | 0.67 | 0.98 | 0.94 | 0.85 | 0.69 | 1.00 | 0.97 | 0.88 | 0.71 | 1.00 | 1.00 | 0.91 | 0.74 | 1.00 | 1.00 | 0.92 | 0.75 |
| | | ΔT | 24 | 24 | 22 | 19 | 24 | 24 | 23 | 20 | 24 | 24 | 23 | 20 | 24 | 24 | 23 | 20 | 23 | 24 | 23 | 20 | 21 | 22 | 21 | 18 |
| | | kW | 3.18 | 3.24 | 3.34 | 3.44 | 3.41 | 3.48 | 3.59 | 3.70 | 3.62 | 3.69 | 3.81 | 3.93 | 3.80 | 3.88 | 4.00 | 4.13 | 3.95 | 4.04 | 4.16 | 4.30 | 4.08 | 4.17 | 4.31 | 4.45 |
| | | Amps | 10.3 | 10.5 | 10.8 | 11.1 | 10.9 | 11.1 | 11.4 | 11.7 | 11.7 | 11.9 | 12.2 | 12.5 | 12.3 | 12.5 | 12.8 | 13.2 | 12.9 | 13.1 | 13.5 | 13.9 | 13.5 | 13.7 | 14.1 | 14.5 |
| | | HI PR | 244 | 262 | 277 | 289 | 273 | 294 | 311 | 324 | 311 | 335 | 353 | 368 | 354 | 381 | 402 | 420 | 398 | 429 | 453 | 472 | 440 | 474 | 500 | 522 |
| | | LO PR | 112 | 120 | 131 | 139 | 119 | 126 | 138 | 147 | 124 | 131 | 143 | 153 | 130 | 138 | 151 | 160 | 136 | 145 | 158 | 168 | 141 | 150 | 163 | 174 |
| | 1400 | MBh | 42.1 | 42.9 | 44.9 | 47.9 | 41.1 | 41.9 | 43.9 | 46.8 | 40.1 | 40.9 | 42.8 | 45.7 | 39.1 | 39.9 | 41.8 | 44.6 | 37.2 | 37.9 | 39.7 | 42.4 | 34.4 | 35.1 | 36.8 | 39.2 |
| | | S/T | 0.89 | 0.86 | 0.77 | 0.63 | 0.92 | 0.89 | 0.80 | 0.65 | 0.94 | 0.91 | 0.82 | 0.67 | 0.97 | 0.94 | 0.85 | 0.69 | 1.00 | 0.98 | 0.88 | 0.71 | 1.00 | 0.98 | 0.89 | 0.72 |
| | | ΔT | 25 | 24 | 23 | 20 | 25 | 24 | 23 | 20 | 25 | 24 | 23 | 20 | 25 | 25 | 23 | 20 | 24 | 24 | 23 | 20 | 23 | 23 | 21 | 19 |
| | | kW | 3.11 | 3.17 | 3.26 | 3.36 | 3.33 | 3.40 | 3.50 | 3.61 | 3.53 | 3.61 | 3.72 | 3.83 | 3.71 | 3.78 | 3.90 | 4.03 | 3.86 | 3.94 | 4.06 | 4.19 | 3.98 | 4.07 | 4.20 | 4.34 |
| | | Amps | 10.1 | 10.3 | 10.6 | 10.8 | 10.7 | 10.9 | 11.2 | 11.5 | 11.4 | 11.6 | 11.9 | 12.3 | 12.0 | 12.2 | 12.5 | 12.9 | 12.6 | 12.8 | 13.2 | 13.6 | 13.2 | 13.4 | 13.8 | 14.2 |
| | | HI PR | 236 | 254 | 269 | 280 | 265 | 285 | 301 | 314 | 302 | 324 | 343 | 357 | 343 | 370 | 390 | 407 | 386 | 416 | 439 | 458 | 427 | 459 | 485 | 506 |
| | | LO PR | 109 | 116 | 127 | 135 | 115 | 123 | 134 | 143 | 120 | 127 | 139 | 148 | 126 | 134 | 146 | 156 | 132 | 140 | 153 | 163 | 136 | 145 | 158 | 169 |

IDB = Entering Indoor Dry Bulb Temperature

High and low pressures are measured at the liquid and suction service valves.

Shaded area reflects AHRI (TVA) Rating conditions

kW = Total system power

Amps = outdoor unit amps (comp.+fan)

# Expanded Cooling Data — CPG060B

| | | | Outdoor Ambient Temperature | | | | | | | | | | | | | | | | | | | | | | | |
|---|---|---|---|---|---|---|---|---|---|---|---|---|---|---|---|---|---|---|---|---|---|---|---|---|---|---|
| | | | 65 | | | | 75 | | | | 85 | | | | 95 | | | | 105 | | | | 115 | | | |
| | | | Entering Indoor Wet Bulb Temperature | | | | | | | | | | | | | | | | | | | | | | | |
| IDB | Airflow | | 59 | 63 | 67 | 71 | 59 | 63 | 67 | 71 | 59 | 63 | 67 | 71 | 59 | 63 | 67 | 71 | 59 | 63 | 67 | 71 | 59 | 63 | 67 | 71 |
| 70 | 2250 | MBh | 58.3 | 60.4 | 66.2 | - | 56.9 | 59.0 | 64.7 | - | 55.6 | 57.6 | 63.1 | - | 54.2 | 56.2 | 61.6 | - | 51.5 | 53.4 | 58.5 | - | 47.7 | 49.5 | 54.2 | - |
| | | S/T | 0.73 | 0.61 | 0.42 | - | 0.75 | 0.63 | 0.44 | - | 0.77 | 0.65 | 0.45 | - | 0.80 | 0.67 | 0.46 | - | 0.83 | 0.69 | 0.48 | - | 0.84 | 0.70 | 0.48 | - |
| | | ΔT | 17 | 15 | 11 | - | 18 | 15 | 12 | - | 18 | 15 | 12 | - | 18 | 15 | 12 | - | 17 | 15 | 11 | - | 16 | 14 | 11 | - |
| | | kW | 3.97 | 4.06 | 4.18 | - | 4.27 | 4.36 | 4.50 | - | 4.54 | 4.64 | 4.78 | - | 4.77 | 4.88 | 5.03 | - | 4.97 | 5.08 | 5.25 | - | 5.14 | 5.25 | 5.43 | - |
| | | Amps | 12.4 | 12.7 | 13.0 | - | 13.3 | 13.5 | 13.9 | - | 14.2 | 14.5 | 14.9 | - | 15.0 | 15.3 | 15.7 | - | 15.8 | 16.1 | 16.6 | - | 16.6 | 17.0 | 17.5 | - |
| | | HI PR | 244 | 262 | 277 | - | 273 | 294 | 311 | - | 311 | 335 | 353 | - | 354 | 381 | 402 | - | 398 | 429 | 453 | - | 440 | 474 | 500 | - |
| | | LO PR | 107 | 114 | 124 | - | 113 | 120 | 131 | - | 118 | 125 | 137 | - | 124 | 131 | 144 | - | 130 | 138 | 150 | - | 134 | 143 | 156 | - |
| | 2000 | MBh | 56.6 | 58.7 | 64.3 | - | 55.3 | 57.3 | 62.8 | - | 54.0 | 55.9 | 61.3 | - | 52.7 | 54.6 | 59.8 | - | 50.0 | 51.8 | 56.8 | - | 46.3 | 48.0 | 52.6 | - |
| | | S/T | 0.69 | 0.58 | 0.40 | - | 0.72 | 0.60 | 0.42 | - | 0.74 | 0.62 | 0.43 | - | 0.76 | 0.64 | 0.44 | - | 0.79 | 0.66 | 0.46 | - | 0.80 | 0.67 | 0.46 | - |
| | | ΔT | 18 | 16 | 12 | - | 18 | 16 | 12 | - | 18 | 16 | 12 | - | 18 | 16 | 12 | - | 18 | 16 | 12 | - | 17 | 15 | 11 | - |
| | | kW | 3.94 | 4.02 | 4.15 | - | 4.24 | 4.33 | 4.47 | - | 4.50 | 4.60 | 4.75 | - | 4.73 | 4.84 | 4.99 | - | 4.93 | 5.04 | 5.20 | - | 5.10 | 5.21 | 5.38 | - |
| | | Amps | 12.4 | 12.6 | 12.9 | - | 13.2 | 13.4 | 13.8 | - | 14.1 | 14.4 | 14.8 | - | 14.9 | 15.2 | 15.6 | - | 15.7 | 16.0 | 16.5 | - | 16.5 | 16.8 | 17.3 | - |
| | | HI PR | 241 | 260 | 274 | - | 271 | 291 | 308 | - | 308 | 331 | 350 | - | 351 | 377 | 398 | - | 394 | 424 | 448 | - | 436 | 469 | 495 | - |
| | | LO PR | 106 | 113 | 123 | - | 112 | 119 | 130 | - | 116 | 124 | 135 | - | 122 | 130 | 142 | - | 128 | 136 | 149 | - | 133 | 141 | 154 | - |
| | 1750 | MBh | 52.2 | 54.2 | 59.3 | - | 51.0 | 52.9 | 58.0 | - | 49.8 | 51.6 | 56.6 | - | 48.6 | 50.4 | 55.2 | - | 46.2 | 47.9 | 52.4 | - | 42.8 | 44.3 | 48.6 | - |
| | | S/T | 0.67 | 0.56 | 0.39 | - | 0.69 | 0.58 | 0.40 | - | 0.71 | 0.59 | 0.41 | - | 0.73 | 0.61 | 0.42 | - | 0.76 | 0.64 | 0.44 | - | 0.77 | 0.64 | 0.44 | - |
| | | ΔT | 18 | 16 | 12 | - | 19 | 16 | 12 | - | 19 | 16 | 12 | - | 19 | 16 | 12 | - | 18 | 16 | 12 | - | 17 | 15 | 11 | - |
| | | kW | 3.85 | 3.93 | 4.05 | - | 4.14 | 4.23 | 4.36 | - | 4.39 | 4.49 | 4.63 | - | 4.62 | 4.72 | 4.87 | - | 4.81 | 4.91 | 5.07 | - | 4.97 | 5.08 | 5.25 | - |
| | | Amps | 12.1 | 12.3 | 12.6 | - | 12.9 | 13.1 | 13.5 | - | 13.8 | 14.0 | 14.4 | - | 14.5 | 14.8 | 15.3 | - | 15.3 | 15.6 | 16.1 | - | 16.1 | 16.4 | 16.9 | - |
| | | HI PR | 234 | 252 | 266 | - | 263 | 283 | 298 | - | 299 | 321 | 339 | - | 340 | 366 | 386 | - | 383 | 412 | 435 | - | 423 | 455 | 480 | - |
| | | LO PR | 103 | 109 | 120 | - | 109 | 116 | 126 | - | 113 | 120 | 131 | - | 119 | 126 | 138 | - | 124 | 132 | 144 | - | 129 | 137 | 149 | - |
| 75 | 2250 | MBh | 59.3 | 61.0 | 66.1 | 70.9 | 57.9 | 59.6 | 64.5 | 69.3 | 56.5 | 58.2 | 63.0 | 67.6 | 55.2 | 56.8 | 61.5 | 66.0 | 52.4 | 53.9 | 58.4 | 62.7 | 48.5 | 50.0 | 54.1 | 58.1 |
| | | S/T | 0.83 | 0.74 | 0.56 | 0.36 | 0.86 | 0.77 | 0.58 | 0.37 | 0.88 | 0.79 | 0.60 | 0.38 | 0.91 | 0.81 | 0.61 | 0.40 | 0.94 | 0.84 | 0.64 | 0.41 | 0.95 | 0.85 | 0.64 | 0.41 |
| | | ΔT | 20 | 18 | 15 | 10 | 20 | 19 | 15 | 11 | 20 | 19 | 15 | 11 | 20 | 19 | 15 | 11 | 20 | 19 | 15 | 11 | 19 | 17 | 14 | 10 |
| | | kW | 4.01 | 4.09 | 4.22 | 4.35 | 4.31 | 4.40 | 4.54 | 4.68 | 4.58 | 4.67 | 4.82 | 4.98 | 4.81 | 4.92 | 5.08 | 5.24 | 5.01 | 5.12 | 5.29 | 5.47 | 5.18 | 5.30 | 5.47 | 5.66 |
| | | Amps | 12.5 | 12.8 | 13.1 | 13.5 | 13.4 | 13.6 | 14.0 | 14.4 | 14.3 | 14.6 | 15.0 | 15.5 | 15.1 | 15.4 | 15.9 | 16.4 | 15.9 | 16.3 | 16.7 | 17.3 | 16.7 | 17.1 | 17.6 | 18.2 |
| | | HI PR | 246 | 265 | 280 | 292 | 276 | 297 | 314 | 327 | 314 | 338 | 357 | 372 | 358 | 385 | 406 | 424 | 402 | 433 | 457 | 477 | 445 | 478 | 505 | 527 |
| | | LO PR | 108 | 115 | 126 | 134 | 114 | 122 | 133 | 141 | 119 | 126 | 138 | 147 | 125 | 133 | 145 | 154 | 131 | 139 | 152 | 162 | 135 | 144 | 157 | 167 |
| | 2000 | MBh | 57.6 | 59.3 | 64.2 | 68.9 | 56.2 | 57.9 | 62.7 | 67.3 | 54.9 | 56.5 | 61.2 | 65.7 | 53.6 | **55.1** | 59.7 | 64.1 | 50.9 | 52.4 | 56.7 | 60.8 | 47.1 | 48.5 | 52.5 | 56.4 |
| | | S/T | 0.79 | 0.71 | 0.53 | 0.34 | 0.82 | 0.73 | 0.55 | 0.36 | 0.84 | 0.75 | 0.57 | 0.37 | 0.87 | **0.77** | 0.59 | 0.38 | 0.90 | 0.80 | 0.61 | 0.39 | 0.91 | 0.81 | 0.61 | 0.39 |
| | | ΔT | 21 | 19 | 16 | 11 | 21 | 19 | 16 | 11 | 21 | 19 | 16 | 11 | 21 | **20** | 16 | 11 | 21 | 19 | 16 | 11 | 20 | 18 | 15 | 10 |
| | | kW | 3.97 | 4.06 | 4.18 | 4.31 | 4.27 | 4.36 | 4.50 | 4.65 | 4.54 | 4.64 | 4.78 | 4.94 | 4.77 | **4.88** | 5.03 | 5.20 | 4.97 | 5.08 | 5.25 | 5.42 | 5.14 | 5.26 | 5.43 | 5.61 |
| | | Amps | 12.4 | 12.7 | 13.0 | 13.4 | 13.3 | 13.5 | 13.9 | 14.3 | 14.2 | 14.5 | 14.9 | 15.4 | 15.0 | **15.3** | 15.7 | 16.3 | 15.8 | 16.1 | 16.6 | 17.2 | 16.6 | 17.0 | 17.5 | 18.0 |
| | | HI PR | 244 | 262 | 277 | 289 | 273 | 294 | 311 | 324 | 311 | 335 | 353 | 369 | 354 | **381** | 402 | 420 | 398 | 429 | 453 | 472 | 440 | 474 | 500 | 522 |
| | | LO PR | 107 | 114 | 124 | 133 | 113 | 120 | 131 | 140 | 118 | 125 | 137 | 146 | 124 | **131** | 144 | 153 | 130 | 138 | 150 | 160 | 134 | 143 | 156 | 166 |
| | 1750 | MBh | 53.1 | 54.7 | 59.2 | 63.6 | 51.9 | 53.4 | 57.8 | 62.1 | 50.7 | 52.2 | 56.5 | 60.6 | 49.4 | 50.9 | 55.1 | 59.1 | 47.0 | 48.3 | 52.3 | 56.2 | 43.5 | 44.8 | 48.5 | 52.0 |
| | | S/T | 0.76 | 0.68 | 0.52 | 0.33 | 0.79 | 0.71 | 0.53 | 0.34 | 0.81 | 0.72 | 0.55 | 0.35 | 0.83 | 0.75 | 0.57 | 0.36 | 0.87 | 0.77 | 0.59 | 0.38 | 0.87 | 0.78 | 0.59 | 0.38 |
| | | ΔT | 21 | 20 | 16 | 11 | 22 | 20 | 16 | 11 | 22 | 20 | 16 | 11 | 22 | 20 | 16 | 11 | 21 | 20 | 16 | 11 | 20 | 18 | 15 | 10 |
| | | kW | 3.88 | 3.96 | 4.08 | 4.21 | 4.17 | 4.26 | 4.39 | 4.53 | 4.43 | 4.52 | 4.67 | 4.82 | 4.66 | 4.76 | 4.91 | 5.07 | 4.85 | 4.95 | 5.11 | 5.28 | 5.01 | 5.12 | 5.29 | 5.47 |
| | | Amps | 12.2 | 12.4 | 12.7 | 13.1 | 13.0 | 13.2 | 13.6 | 14.0 | 13.9 | 14.1 | 14.5 | 15.0 | 14.7 | 15.0 | 15.4 | 15.9 | 15.4 | 15.8 | 16.2 | 16.7 | 16.2 | 16.6 | 17.0 | 17.6 |
| | | HI PR | 236 | 254 | 269 | 280 | 265 | 285 | 301 | 314 | 302 | 325 | 343 | 357 | 344 | 370 | 390 | 407 | 386 | 416 | 439 | 458 | 427 | 460 | 485 | 506 |
| | | LO PR | 104 | 111 | 121 | 129 | 110 | 117 | 128 | 136 | 114 | 121 | 133 | 141 | 120 | 128 | 139 | 148 | 126 | 134 | 146 | 155 | 130 | 138 | 151 | 161 |

IDB = Entering Indoor Dry Bulb Temperature
High and low pressures are measured at the liquid and suction service valves.

Shaded area reflects ACCA (TVA) Rating conditions

kW = Total system power
Amps = outdoor unit amps (comp.+fan)

# Expanded Cooling Data — CPG060B (cont.)

| | | | Outdoor Ambient Temperature | | | | | | | | | | | | | | | | | | | | | | | |
|---|---|---|---|---|---|---|---|---|---|---|---|---|---|---|---|---|---|---|---|---|---|---|---|---|---|---|
| | | | 65 | | | | 75 | | | | 85 | | | | 95 | | | | 105 | | | | 115 | | | |
| | | | Entering Indoor Wet Bulb Temperature | | | | | | | | | | | | | | | | | | | | | | | |
| IDB | Airflow | | 59 | 63 | 67 | 71 | 59 | 63 | 67 | 71 | 59 | 63 | 67 | 71 | 59 | 63 | 67 | 71 | 59 | 63 | 67 | 71 | 59 | 63 | 67 | 71 |
| 80 | 2250 | MBh | 60.3 | 61.7 | 65.9 | 70.4 | 58.9 | 60.2 | 64.3 | 68.8 | 57.5 | 58.8 | 62.8 | 67.2 | 56.1 | 57.4 | 61.3 | 65.5 | 53.3 | 54.5 | 58.2 | 62.2 | 49.4 | 50.5 | 53.9 | 57.7 |
| | | S/T | 0.91 | 0.85 | 0.69 | 0.52 | 0.94 | 0.88 | 0.72 | 0.54 | 0.96 | 0.90 | 0.74 | 0.55 | 1.00 | 0.93 | 0.76 | 0.57 | 1.00 | 0.97 | 0.79 | 0.59 | 1.00 | 1.00 | 0.80 | 0.59 |
| | | ΔT | 22 | 21 | 19 | 15 | 23 | 22 | 19 | 15 | 23 | 22 | 19 | 15 | 23 | 22 | 19 | 15 | 22 | 22 | 19 | 15 | 20 | 21 | 18 | 14 |
| | | kW | 4.04 | 4.12 | 4.25 | 4.38 | 4.34 | 4.43 | 4.58 | 4.72 | 4.61 | 4.71 | 4.86 | 5.02 | 4.85 | 4.96 | 5.12 | 5.29 | 5.05 | 5.16 | 5.33 | 5.51 | 5.23 | 5.34 | 5.52 | 5.71 |
| | | Amps | 12.6 | 12.9 | 13.2 | 13.6 | 13.5 | 13.7 | 14.1 | 14.5 | 14.4 | 14.7 | 15.1 | 15.6 | 15.2 | 15.6 | 16.0 | 16.5 | 16.1 | 16.4 | 16.9 | 17.4 | 16.9 | 17.2 | 17.7 | 18.3 |
| | | HI PR | 249 | 267 | 282 | 295 | 279 | 300 | 317 | 331 | 317 | 341 | 360 | 376 | 361 | 389 | 411 | 428 | 406 | 437 | 462 | 482 | 449 | 483 | 510 | 532 |
| | | LO PR | 109 | 116 | 127 | 135 | 116 | 123 | 134 | 143 | 120 | 128 | 139 | 148 | 126 | 134 | 146 | 156 | 132 | 141 | 153 | 163 | 137 | 145 | 159 | 169 |
| | 2000 | MBh | 58.6 | 59.9 | 64.0 | 68.4 | 57.2 | 58.5 | 62.5 | 66.8 | 55.9 | 57.1 | 61.0 | 65.2 | 54.5 | 55.7 | **59.5** | 63.6 | 51.8 | 52.9 | 56.5 | 60.4 | 48.0 | 49.0 | 52.4 | 56.0 |
| | | S/T | 0.87 | 0.81 | 0.66 | 0.49 | 0.90 | 0.84 | 0.68 | 0.51 | 0.92 | 0.86 | 0.70 | 0.52 | 0.95 | 0.89 | **0.72** | 0.54 | 0.99 | 0.92 | 0.75 | 0.56 | 0.99 | 0.93 | 0.76 | 0.57 |
| | | ΔT | 23 | 22 | 19 | 16 | 24 | 23 | 20 | 16 | 24 | 23 | 20 | 16 | 24 | 23 | **20** | 16 | 23 | 22 | 20 | 16 | 22 | 21 | 18 | 15 |
| | | kW | 4.01 | 4.09 | 4.22 | 4.35 | 4.31 | 4.40 | 4.54 | 4.69 | 4.58 | 4.67 | 4.82 | 4.98 | 4.81 | 4.92 | **5.08** | 5.24 | 5.01 | 5.12 | 5.29 | 5.47 | 5.19 | 5.30 | 5.47 | 5.66 |
| | | Amps | 12.5 | 12.8 | 13.1 | 13.5 | 13.4 | 13.6 | 14.0 | 14.4 | 14.3 | 14.6 | 15.0 | 15.5 | 15.1 | 15.4 | **15.9** | 16.4 | 15.9 | 16.3 | 16.7 | 17.3 | 16.8 | 17.1 | 17.6 | 18.2 |
| | | HI PR | 246 | 265 | 280 | 292 | 276 | 297 | 314 | 327 | 314 | 338 | 357 | 372 | 358 | 385 | **407** | 424 | 402 | 433 | 457 | 477 | 445 | 478 | 505 | 527 |
| | | LO PR | 108 | 115 | 126 | 134 | 114 | 122 | 133 | 141 | 119 | 126 | 138 | 147 | 125 | 133 | **145** | 154 | 131 | 139 | 152 | 162 | 135 | 144 | 157 | 167 |
| | 1750 | MBh | 54.1 | 55.3 | 59.0 | 63.1 | 52.8 | 54.0 | 57.7 | 61.6 | 51.6 | 52.7 | 56.3 | 60.2 | 50.3 | 51.4 | 54.9 | 58.7 | 47.8 | 48.8 | 52.2 | 55.8 | 44.3 | 45.2 | 48.3 | 51.7 |
| | | S/T | 0.83 | 0.78 | 0.64 | 0.48 | 0.86 | 0.81 | 0.66 | 0.49 | 0.89 | 0.83 | 0.68 | 0.51 | 0.92 | 0.86 | 0.70 | 0.52 | 0.95 | 0.89 | 0.73 | 0.54 | 0.96 | 0.90 | 0.73 | 0.55 |
| | | ΔT | 24 | 23 | 20 | 16 | 24 | 23 | 20 | 16 | 24 | 23 | 20 | 16 | 24 | 23 | 20 | 16 | 24 | 23 | 20 | 16 | 22 | 21 | 19 | 15 |
| | | kW | 3.91 | 3.99 | 4.12 | 4.24 | 4.21 | 4.29 | 4.43 | 4.57 | 4.46 | 4.56 | 4.71 | 4.86 | 4.69 | 4.80 | 4.95 | 5.11 | 4.89 | 5.00 | 5.16 | 5.33 | 5.06 | 5.17 | 5.34 | 5.52 |
| | | Amps | 12.3 | 12.5 | 12.8 | 13.2 | 13.1 | 13.3 | 13.7 | 14.1 | 14.0 | 14.3 | 14.7 | 15.1 | 14.8 | 15.1 | 15.5 | 16.0 | 15.6 | 15.9 | 16.3 | 16.9 | 16.4 | 16.7 | 17.2 | 17.7 |
| | | HI PR | 239 | 257 | 271 | 283 | 268 | 288 | 304 | 317 | 305 | 328 | 346 | 361 | 347 | 373 | 394 | 411 | 390 | 420 | 444 | 463 | 431 | 464 | 490 | 511 |
| | | LO PR | 105 | 112 | 122 | 130 | 111 | 118 | 129 | 137 | 115 | 123 | 134 | 143 | 121 | 129 | 141 | 150 | 127 | 135 | 147 | 157 | 131 | 140 | 152 | 162 |
| 85 | 2250 | MBh | 61.4 | 62.6 | 65.6 | 69.9 | 60.0 | 61.1 | 64.0 | 68.3 | 58.5 | 59.7 | 62.5 | 66.7 | 57.1 | 58.2 | 61.0 | 65.1 | 54.3 | 55.3 | 57.9 | 61.8 | 50.3 | 51.2 | 53.7 | 57.2 |
| | | S/T | 0.95 | 0.92 | 0.83 | 0.67 | 0.99 | 0.95 | 0.86 | 0.70 | 1.00 | 0.98 | 0.88 | 0.71 | 1.00 | 1.00 | 0.91 | 0.74 | 1.00 | 1.00 | 0.94 | 0.77 | 1.00 | 1.00 | 0.95 | 0.77 |
| | | ΔT | 24 | 23 | 22 | 19 | 24 | 24 | 22 | 19 | 24 | 24 | 22 | 19 | 23 | 24 | 23 | 20 | 22 | 23 | 22 | 19 | 21 | 21 | 21 | 18 |
| | | kW | 4.07 | 4.15 | 4.28 | 4.42 | 4.38 | 4.47 | 4.61 | 4.76 | 4.65 | 4.75 | 4.90 | 5.06 | 4.89 | 5.00 | 5.16 | 5.33 | 5.10 | 5.21 | 5.38 | 5.56 | 5.27 | 5.39 | 5.57 | 5.75 |
| | | Amps | 12.7 | 13.0 | 13.3 | 13.7 | 13.6 | 13.8 | 14.2 | 14.6 | 14.5 | 14.8 | 15.2 | 15.7 | 15.4 | 15.7 | 16.1 | 16.6 | 16.2 | 16.5 | 17.0 | 17.6 | 17.0 | 17.4 | 17.9 | 18.5 |
| | | HI PR | 251 | 270 | 285 | 298 | 282 | 303 | 320 | 334 | 320 | 345 | 364 | 380 | 365 | 393 | 415 | 433 | 411 | 442 | 467 | 487 | 454 | 488 | 515 | 538 |
| | | LO PR | 110 | 117 | 128 | 137 | 117 | 124 | 135 | 144 | 121 | 129 | 141 | 150 | 127 | 135 | 148 | 158 | 133 | 142 | 155 | 165 | 138 | 147 | 160 | 171 |
| | 2000 | MBh | 59.6 | 60.8 | 63.6 | 67.9 | 58.2 | 59.4 | 62.2 | 66.3 | 56.8 | 57.9 | 60.7 | 64.7 | 55.5 | 56.5 | 59.2 | 63.2 | 52.7 | 53.7 | 56.2 | 60.0 | 48.8 | 49.7 | 52.1 | 55.6 |
| | | S/T | 0.91 | 0.88 | 0.79 | 0.64 | 0.94 | 0.91 | 0.82 | 0.66 | 0.96 | 0.93 | 0.84 | 0.68 | 1.00 | 0.96 | 0.87 | 0.70 | 1.00 | 1.00 | 0.90 | 0.73 | 1.00 | 1.00 | 0.91 | 0.74 |
| | | ΔT | 25 | 24 | 23 | 20 | 25 | 25 | 23 | 20 | 25 | 25 | 23 | 20 | 25 | 25 | 24 | 20 | 24 | 25 | 23 | 20 | 22 | 23 | 22 | 19 |
| | | kW | 4.04 | 4.12 | 4.25 | 4.38 | 4.34 | 4.43 | 4.58 | 4.72 | 4.61 | 4.71 | 4.86 | 5.02 | 4.85 | 4.96 | 5.12 | 5.29 | 5.05 | 5.16 | 5.33 | 5.51 | 5.23 | 5.34 | 5.52 | 5.71 |
| | | Amps | 12.6 | 12.9 | 13.2 | 13.6 | 13.5 | 13.7 | 14.1 | 14.5 | 14.4 | 14.7 | 15.1 | 15.6 | 15.2 | 15.6 | 16.0 | 16.5 | 16.1 | 16.4 | 16.9 | 17.4 | 16.9 | 17.2 | 17.7 | 18.3 |
| | | HI PR | 249 | 267 | 282 | 295 | 279 | 300 | 317 | 331 | 317 | 341 | 360 | 376 | 361 | 389 | 411 | 428 | 406 | 437 | 462 | 482 | 449 | 483 | 510 | 532 |
| | | LO PR | 109 | 116 | 127 | 135 | 116 | 123 | 134 | 143 | 120 | 128 | 139 | 148 | 126 | 134 | 146 | 156 | 132 | 141 | 153 | 163 | 137 | 145 | 159 | 169 |
| | 1750 | MBh | 55.0 | 56.1 | 58.7 | 62.7 | 53.7 | 54.8 | 57.4 | 61.2 | 52.5 | 53.5 | 56.0 | 59.8 | 51.2 | 52.2 | 54.6 | 58.3 | 48.6 | 49.6 | 51.9 | 55.4 | 45.0 | 45.9 | 48.1 | 51.3 |
| | | S/T | 0.87 | 0.84 | 0.76 | 0.62 | 0.91 | 0.87 | 0.79 | 0.64 | 0.93 | 0.90 | 0.81 | 0.66 | 0.96 | 0.93 | 0.84 | 0.68 | 1.00 | 0.96 | 0.87 | 0.70 | 1.00 | 0.97 | 0.87 | 0.71 |
| | | ΔT | 25 | 25 | 24 | 20 | 26 | 25 | 24 | 21 | 26 | 25 | 24 | 21 | 26 | 25 | 24 | 21 | 25 | 25 | 24 | 20 | 24 | 23 | 22 | 19 |
| | | kW | 3.94 | 4.02 | 4.15 | 4.28 | 4.24 | 4.33 | 4.46 | 4.61 | 4.50 | 4.60 | 4.74 | 4.90 | 4.73 | 4.83 | 4.99 | 5.16 | 4.93 | 5.04 | 5.20 | 5.37 | 5.10 | 5.21 | 5.38 | 5.56 |
| | | Amps | 12.3 | 12.6 | 12.9 | 13.3 | 13.2 | 13.4 | 13.8 | 14.2 | 14.1 | 14.4 | 14.8 | 15.2 | 14.9 | 15.2 | 15.6 | 16.1 | 15.7 | 16.0 | 16.5 | 17.0 | 16.5 | 16.8 | 17.3 | 17.9 |
| | | HI PR | 241 | 259 | 274 | 286 | 271 | 291 | 307 | 321 | 308 | 331 | 350 | 365 | 350 | 377 | 398 | 415 | 394 | 424 | 448 | 467 | 436 | 469 | 495 | 516 |
| | | LO PR | 106 | 113 | 123 | 131 | 112 | 119 | 130 | 139 | 116 | 124 | 135 | 144 | 122 | 130 | 142 | 151 | 128 | 136 | 149 | 159 | 133 | 141 | 154 | 164 |

IDB = Entering Indoor Dry Bulb Temperature
High and low pressures are measured at the liquid and suction service valves.

Shaded area reflects AHRI (TVA) Rating conditions

kW = Total system power
Amps = outdoor unit amps (comp.+fan)

# Expanded Cooling Data — CPG072B

| | | | Outdoor Ambient Temperature | | | | | | | | | | | | | | | | | | | | | | | |
|---|---|---|---|---|---|---|---|---|---|---|---|---|---|---|---|---|---|---|---|---|---|---|---|---|---|---|
| | | | 65 | | | | 75 | | | | 85 | | | | 95 | | | | 105 | | | | 115 | | | |
| | | | Entering Indoor Wet Bulb Temperature | | | | | | | | | | | | | | | | | | | | | | | |
| IDB | Airflow | | 59 | 63 | 67 | 71 | 59 | 63 | 67 | 71 | 59 | 63 | 67 | 71 | 59 | 63 | 67 | 71 | 59 | 63 | 67 | 71 | 59 | 63 | 67 | 71 |
| 70 | 2400 | MBh | 68.6 | 71.1 | 77.9 | - | 67.0 | 69.4 | 76.0 | - | 65.4 | 67.8 | 74.2 | - | 63.8 | 66.1 | 72.4 | - | 60.6 | 62.8 | 68.8 | - | 56.1 | 58.2 | 63.7 | - |
| | | S/T | 0.68 | 0.57 | 0.40 | - | 0.71 | 0.59 | 0.41 | - | 0.73 | 0.61 | 0.42 | - | 0.75 | 0.63 | 0.43 | - | 0.78 | 0.65 | 0.45 | - | 0.78 | 0.65 | 0.45 | - |
| | | ΔT | 18 | 16 | 12 | - | 18 | 16 | 12 | - | 18 | 16 | 12 | - | 18 | 16 | 12 | - | 18 | 16 | 12 | - | 17 | 15 | 11 | - |
| | | kW | 5.08 | 5.18 | 5.33 | - | 5.44 | 5.54 | 5.71 | - | 5.75 | 5.86 | 6.04 | - | 6.02 | 6.15 | 6.33 | - | 6.26 | 6.39 | 6.58 | - | 6.46 | 6.59 | 6.80 | - |
| | | HI PR | 237 | 255 | 270 | - | 266 | 286 | 302 | - | 303 | 326 | 344 | - | 345 | 371 | 392 | - | 388 | 417 | 441 | - | 429 | 461 | 487 | - |
| | | LO PR | 107 | 114 | 124 | - | 113 | 120 | 131 | - | 117 | 125 | 136 | - | 123 | 131 | 143 | - | 129 | 137 | 150 | - | 134 | 142 | 155 | - |
| | 2150 | MBh | 67.5 | 70.0 | 76.7 | - | 66.0 | 68.4 | 74.9 | - | 64.4 | 66.8 | 73.1 | - | 62.8 | 65.1 | 71.4 | - | 59.7 | 61.9 | 67.8 | - | 55.3 | 57.3 | 62.8 | - |
| | | S/T | 0.65 | 0.55 | 0.38 | - | 0.68 | 0.57 | 0.39 | - | 0.69 | 0.58 | 0.40 | - | 0.72 | 0.60 | 0.42 | - | 0.74 | 0.62 | 0.43 | - | 0.75 | 0.63 | 0.43 | - |
| | | ΔT | 19 | 16 | 12 | - | 19 | 17 | 13 | - | 19 | 17 | 13 | - | 19 | 17 | 13 | - | 19 | 16 | 12 | - | 18 | 15 | 12 | - |
| | | kW | 5.06 | 5.16 | 5.30 | - | 5.41 | 5.52 | 5.68 | - | 5.72 | 5.83 | 6.01 | - | 5.99 | 6.11 | 6.30 | - | 6.22 | 6.35 | 6.54 | - | 6.42 | 6.56 | 6.76 | - |
| | | HI PR | 236 | 253 | 268 | - | 264 | 284 | 300 | - | 301 | 323 | 342 | - | 342 | 368 | 389 | - | 385 | 414 | 438 | - | 426 | 458 | 484 | - |
| | | LO PR | 106 | 113 | 123 | - | 112 | 119 | 130 | - | 116 | 124 | 135 | - | 122 | 130 | 142 | - | 128 | 136 | 149 | - | 133 | 141 | 154 | - |
| | 1875 | MBh | 62.3 | 64.6 | 70.8 | - | 60.9 | 63.1 | 69.2 | - | 59.4 | 61.6 | 67.5 | - | 58.0 | 60.1 | 65.9 | - | 55.1 | 57.1 | 62.6 | - | 51.0 | 52.9 | 58.0 | - |
| | | S/T | 0.63 | 0.53 | 0.36 | - | 0.65 | 0.55 | 0.38 | - | 0.67 | 0.56 | 0.39 | - | 0.69 | 0.58 | 0.40 | - | 0.72 | 0.60 | 0.42 | - | 0.72 | 0.60 | 0.42 | - |
| | | ΔT | 19 | 17 | 13 | - | 20 | 17 | 13 | - | 20 | 17 | 13 | - | 20 | 17 | 13 | - | 19 | 17 | 13 | - | 18 | 16 | 12 | - |
| | | kW | 4.95 | 5.04 | 5.19 | - | 5.29 | 5.39 | 5.55 | - | 5.59 | 5.70 | 5.87 | - | 5.85 | 5.97 | 6.15 | - | 6.08 | 6.20 | 6.39 | - | 6.27 | 6.40 | 6.60 | - |
| | | HI PR | 228 | 246 | 260 | - | 256 | 276 | 291 | - | 292 | 314 | 331 | - | 332 | 357 | 377 | - | 374 | 402 | 425 | - | 413 | 444 | 469 | - |
| | | LO PR | 103 | 109 | 120 | - | 109 | 116 | 126 | - | 113 | 120 | 131 | - | 119 | 126 | 138 | - | 124 | 132 | 144 | - | 129 | 137 | 149 | - |
| 75 | 2400 | MBh | 69.7 | 71.8 | 77.7 | 83.4 | 68.1 | 70.1 | 75.9 | 81.5 | 66.5 | 68.4 | 74.1 | 79.5 | 64.9 | 66.8 | 72.3 | 77.6 | 61.6 | 63.4 | 68.7 | 73.7 | 57.1 | 58.8 | 63.6 | 68.3 |
| | | S/T | 0.78 | 0.69 | 0.53 | 0.34 | 0.80 | 0.72 | 0.54 | 0.35 | 0.82 | 0.74 | 0.56 | 0.36 | 0.85 | 0.76 | 0.58 | 0.37 | 0.88 | 0.79 | 0.60 | 0.38 | 0.89 | 0.80 | 0.60 | 0.39 |
| | | ΔT | 21 | 19 | 16 | 11 | 21 | 19 | 16 | 11 | 21 | 19 | 16 | 11 | 21 | 19 | 16 | 11 | 21 | 19 | 16 | 11 | 19 | 18 | 15 | 10 |
| | | kW | 5.12 | 5.22 | 5.37 | 5.53 | 5.48 | 5.59 | 5.75 | 5.92 | 5.79 | 5.91 | 6.08 | 6.27 | 6.07 | 6.19 | 6.38 | 6.58 | 6.31 | 6.44 | 6.63 | 6.84 | 6.51 | 6.64 | 6.85 | 7.07 |
| | | HI PR | 240 | 258 | 272 | 284 | 269 | 289 | 306 | 319 | 306 | 329 | 347 | 362 | 348 | 375 | 396 | 413 | 392 | 422 | 445 | 464 | 433 | 466 | 492 | 513 |
| | | LO PR | 108 | 115 | 125 | 133 | 114 | 121 | 132 | 141 | 118 | 126 | 138 | 147 | 124 | 132 | 145 | 154 | 130 | 139 | 151 | 161 | 135 | 144 | 157 | 167 |
| | 2150 | MBh | 68.7 | 70.7 | 76.6 | 82.2 | 67.1 | 69.1 | 74.8 | 80.3 | 65.5 | 67.4 | 73.0 | 78.3 | 63.9 | **65.8** | 71.2 | 76.4 | 60.7 | 62.5 | 67.7 | 72.6 | 56.2 | 57.9 | 62.7 | 67.3 |
| | | S/T | 0.74 | 0.66 | 0.50 | 0.32 | 0.77 | 0.69 | 0.52 | 0.34 | 0.79 | 0.71 | 0.53 | 0.34 | 0.82 | **0.73** | 0.55 | 0.36 | 0.85 | 0.76 | 0.57 | 0.37 | 0.85 | 0.76 | 0.58 | 0.37 |
| | | ΔT | 22 | 20 | 16 | 11 | 22 | 20 | 17 | 12 | 22 | 20 | 17 | 12 | 22 | **21** | 17 | 12 | 22 | 20 | 17 | 11 | 21 | 19 | 15 | 11 |
| | | kW | 5.10 | 5.19 | 5.34 | 5.50 | 5.45 | 5.56 | 5.72 | 5.89 | 5.76 | 5.88 | 6.05 | 6.24 | 6.04 | **6.16** | 6.35 | 6.54 | 6.27 | 6.40 | 6.60 | 6.80 | 6.47 | 6.61 | 6.81 | 7.03 |
| | | HI PR | 238 | 256 | 270 | 282 | 267 | 287 | 303 | 316 | 304 | 327 | 345 | 360 | 346 | **372** | 393 | 410 | 389 | 419 | 442 | 461 | 430 | 463 | 489 | 510 |
| | | LO PR | 107 | 114 | 124 | 133 | 113 | 120 | 131 | 140 | 118 | 125 | 137 | 146 | 124 | **131** | 144 | 153 | 130 | 138 | 150 | 160 | 134 | 143 | 156 | 166 |
| | 1875 | MBh | 63.4 | 65.3 | 70.7 | 75.8 | 61.9 | 63.8 | 69.0 | 74.1 | 60.5 | 62.2 | 67.4 | 72.3 | 59.0 | 60.7 | 65.7 | 70.5 | 56.0 | 57.7 | 62.4 | 67.0 | 51.9 | 53.4 | 57.8 | 62.1 |
| | | S/T | 0.72 | 0.64 | 0.49 | 0.31 | 0.74 | 0.66 | 0.50 | 0.32 | 0.76 | 0.68 | 0.52 | 0.33 | 0.79 | 0.70 | 0.53 | 0.34 | 0.82 | 0.73 | 0.55 | 0.36 | 0.82 | 0.74 | 0.56 | 0.36 |
| | | ΔT | 22 | 21 | 17 | 12 | 23 | 21 | 17 | 12 | 23 | 21 | 17 | 12 | 23 | 21 | 17 | 12 | 22 | 21 | 17 | 12 | 21 | 19 | 16 | 11 |
| | | kW | 4.99 | 5.08 | 5.22 | 5.38 | 5.33 | 5.43 | 5.59 | 5.76 | 5.63 | 5.74 | 5.91 | 6.09 | 5.90 | 6.02 | 6.20 | 6.39 | 6.13 | 6.25 | 6.44 | 6.64 | 6.32 | 6.45 | 6.65 | 6.86 |
| | | HI PR | 231 | 248 | 262 | 274 | 259 | 279 | 294 | 307 | 295 | 317 | 335 | 349 | 335 | 361 | 381 | 398 | 377 | 406 | 429 | 447 | 417 | 449 | 474 | 494 |
| | | LO PR | 104 | 111 | 121 | 129 | 110 | 117 | 128 | 136 | 114 | 121 | 133 | 141 | 120 | 128 | 139 | 148 | 126 | 134 | 146 | 155 | 130 | 138 | 151 | 161 |

IDB = Entering Indoor Dry Bulb Temperature
High and low pressures are measured at the liquid and suction service valves.

Shaded area reflects ACCA (TVA) Rating conditions

kW = Total system power
Amps = outdoor unit amps (comp.+fan)

# Expanded Cooling Data — CPG072B (cont.)

| | | | Outdoor Ambient Temperature | | | | | | | | | | | | | | | | | | | | | | | |
|---|---|---|---|---|---|---|---|---|---|---|---|---|---|---|---|---|---|---|---|---|---|---|---|---|---|---|
| | | | 65 | | | | 75 | | | | 85 | | | | 95 | | | | 105 | | | | 115 | | | |
| | | | Entering Indoor Wet Bulb Temperature | | | | | | | | | | | | | | | | | | | | | | | |
| IDB | Airflow | | 59 | 63 | 67 | 71 | 59 | 63 | 67 | 71 | 59 | 63 | 67 | 71 | 59 | 63 | 67 | 71 | 59 | 63 | 67 | 71 | 59 | 63 | 67 | 71 |
| 80 | 2400 | MBh | 71.0 | 72.5 | 77.5 | 82.8 | 69.3 | 70.8 | 75.7 | 80.9 | 67.7 | 69.1 | 73.9 | 79.0 | 66.0 | 67.5 | 72.1 | 77.0 | 62.7 | 64.1 | 68.5 | 73.2 | 58.1 | 59.4 | 63.4 | 67.8 |
| | | S/T | 0.85 | 0.80 | 0.65 | 0.49 | 0.88 | 0.83 | 0.67 | 0.50 | 0.90 | 0.85 | 0.69 | 0.52 | 0.93 | 0.88 | 0.71 | 0.53 | 0.97 | 0.91 | 0.74 | 0.55 | 0.98 | 0.92 | 0.75 | 0.56 |
| | | ΔT | 23 | 22 | 19 | 15 | 23 | 22 | 20 | 16 | 23 | 22 | 20 | 16 | 24 | 23 | 20 | 16 | 23 | 22 | 19 | 16 | 22 | 21 | 18 | 14 |
| | | kW | 5.16 | 5.26 | 5.41 | 5.57 | 5.52 | 5.63 | 5.79 | 5.97 | 5.84 | 5.95 | 6.13 | 6.32 | 6.12 | 6.24 | 6.43 | 6.63 | 6.36 | 6.49 | 6.69 | 6.90 | 6.56 | 6.70 | 6.90 | 7.12 |
| | | HI PR | 242 | 260 | 275 | 287 | 272 | 292 | 309 | 322 | 309 | 332 | 351 | 366 | 352 | 379 | 400 | 417 | 396 | 426 | 450 | 469 | 437 | 471 | 497 | 518 |
| | | LO PR | 109 | 116 | 127 | 135 | 115 | 123 | 134 | 142 | 120 | 127 | 139 | 148 | 126 | 134 | 146 | 156 | 132 | 140 | 153 | 163 | 136 | 145 | 158 | 169 |
| | 2150 | MBh | 69.9 | 71.4 | 76.3 | 81.6 | 68.3 | 69.8 | 74.6 | 79.7 | 66.7 | 68.1 | 72.8 | 77.8 | 65.0 | 66.5 | **71.0** | 75.9 | 61.8 | 63.1 | 67.5 | 72.1 | 57.2 | 58.5 | 62.5 | 66.8 |
| | | S/T | 0.82 | 0.76 | 0.62 | 0.47 | 0.84 | 0.79 | 0.64 | 0.48 | 0.87 | 0.81 | 0.66 | 0.49 | 0.89 | 0.84 | **0.68** | 0.51 | 0.93 | 0.87 | 0.71 | 0.53 | 0.94 | 0.88 | 0.71 | 0.53 |
| | | ΔT | 24 | 23 | 20 | 16 | 25 | 24 | 21 | 16 | 25 | 24 | 21 | 16 | 25 | 24 | **21** | 17 | 25 | 24 | 20 | 16 | 23 | 22 | 19 | 15 |
| | | kW | 5.13 | 5.23 | 5.38 | 5.54 | 5.49 | 5.60 | 5.76 | 5.94 | 5.81 | 5.92 | 6.10 | 6.29 | 6.08 | 6.21 | **6.40** | 6.59 | 6.32 | 6.45 | 6.65 | 6.86 | 6.53 | 6.66 | 6.87 | 7.08 |
| | | HI PR | 240 | 259 | 273 | 285 | 270 | 290 | 306 | 320 | 307 | 330 | 349 | 364 | 349 | 376 | **397** | 414 | 393 | 423 | 447 | 466 | 434 | 467 | 493 | 515 |
| | | LO PR | 108 | 115 | 126 | 134 | 114 | 122 | 133 | 141 | 119 | 126 | 138 | 147 | 125 | 133 | **145** | 154 | 131 | 139 | 152 | 162 | 135 | 144 | 157 | 167 |
| | 1875 | MBh | 64.5 | 65.9 | 70.4 | 75.3 | 63.0 | 64.4 | 68.8 | 73.6 | 61.5 | 62.9 | 67.2 | 71.8 | 60.0 | 61.3 | 65.5 | 70.1 | 57.0 | 58.3 | 62.3 | 66.6 | 52.8 | 54.0 | 57.7 | 61.6 |
| | | S/T | 0.79 | 0.74 | 0.60 | 0.45 | 0.81 | 0.76 | 0.62 | 0.46 | 0.84 | 0.78 | 0.64 | 0.48 | 0.86 | 0.81 | 0.66 | 0.49 | 0.90 | 0.84 | 0.68 | 0.51 | 0.90 | 0.85 | 0.69 | 0.51 |
| | | ΔT | 25 | 24 | 21 | 17 | 25 | 24 | 21 | 17 | 25 | 24 | 21 | 17 | 25 | 24 | 21 | 17 | 25 | 24 | 21 | 17 | 23 | 22 | 19 | 16 |
| | | kW | 5.02 | 5.12 | 5.26 | 5.42 | 5.37 | 5.47 | 5.63 | 5.80 | 5.67 | 5.79 | 5.96 | 6.14 | 5.95 | 6.07 | 6.25 | 6.44 | 6.17 | 6.30 | 6.49 | 6.69 | 6.37 | 6.50 | 6.70 | 6.91 |
| | | HI PR | 233 | 251 | 265 | 276 | 262 | 282 | 297 | 310 | 298 | 320 | 338 | 353 | 339 | 365 | 385 | 402 | 381 | 410 | 433 | 452 | 421 | 453 | 479 | 499 |
| | | LO PR | 105 | 112 | 122 | 130 | 111 | 118 | 129 | 137 | 115 | 123 | 134 | 143 | 121 | 129 | 141 | 150 | 127 | 135 | 147 | 157 | 131 | 140 | 152 | 162 |
| 85 | 2400 | MBh | 72.2 | 73.6 | 77.1 | 82.2 | 70.5 | 71.9 | 75.3 | 80.3 | 68.8 | 70.2 | 73.5 | 78.4 | 67.2 | 68.5 | 71.7 | 76.5 | 63.8 | 65.0 | 68.1 | 72.7 | 59.1 | 60.2 | 63.1 | 67.3 |
| | | S/T | 0.89 | 0.86 | 0.78 | 0.63 | 0.93 | 0.89 | 0.81 | 0.65 | 0.95 | 0.92 | 0.83 | 0.67 | 0.98 | 0.94 | 0.85 | 0.69 | 1.00 | 0.98 | 0.88 | 0.72 | 1.00 | 0.99 | 0.89 | 0.72 |
| | | ΔT | 25 | 24 | 23 | 20 | 25 | 25 | 23 | 20 | 25 | 25 | 23 | 20 | 25 | 25 | 23 | 20 | 24 | 24 | 23 | 20 | 23 | 23 | 22 | 19 |
| | | kW | 5.20 | 5.30 | 5.45 | 5.61 | 5.56 | 5.67 | 5.84 | 6.01 | 5.88 | 6.00 | 6.18 | 6.37 | 6.16 | 6.29 | 6.48 | 6.68 | 6.40 | 6.54 | 6.74 | 6.95 | 6.61 | 6.75 | 6.96 | 7.18 |
| | | HI PR | 244 | 263 | 278 | 290 | 274 | 295 | 312 | 325 | 312 | 336 | 355 | 370 | 355 | 382 | 404 | 421 | 400 | 430 | 454 | 474 | 442 | 475 | 502 | 523 |
| | | LO PR | 110 | 117 | 128 | 136 | 116 | 124 | 135 | 144 | 121 | 129 | 140 | 150 | 127 | 135 | 147 | 157 | 133 | 142 | 155 | 165 | 138 | 146 | 160 | 170 |
| | 2150 | MBh | 71.1 | 72.5 | 75.9 | 81.0 | 69.5 | 70.8 | 74.2 | 79.1 | 67.8 | 69.1 | 72.4 | 77.3 | 66.2 | 67.5 | 70.6 | 75.4 | 62.9 | 64.1 | 67.1 | 71.6 | 58.2 | 59.4 | 62.2 | 66.3 |
| | | S/T | 0.85 | 0.82 | 0.74 | 0.60 | 0.89 | 0.85 | 0.77 | 0.63 | 0.91 | 0.88 | 0.79 | 0.64 | 0.94 | 0.90 | 0.82 | 0.66 | 0.97 | 0.94 | 0.85 | 0.69 | 0.98 | 0.95 | 0.85 | 0.69 |
| | | ΔT | 26 | 26 | 24 | 21 | 26 | 26 | 24 | 21 | 26 | 26 | 24 | 21 | 27 | 26 | 25 | 21 | 26 | 26 | 24 | 21 | 24 | 24 | 23 | 20 |
| | | kW | 5.17 | 5.27 | 5.42 | 5.58 | 5.53 | 5.64 | 5.81 | 5.98 | 5.85 | 5.97 | 6.15 | 6.33 | 6.13 | 6.26 | 6.45 | 6.65 | 6.37 | 6.50 | 6.70 | 6.91 | 6.58 | 6.71 | 6.92 | 7.14 |
| | | HI PR | 243 | 261 | 276 | 288 | 272 | 293 | 310 | 323 | 310 | 333 | 352 | 367 | 353 | 380 | 401 | 418 | 397 | 427 | 451 | 470 | 439 | 472 | 498 | 520 |
| | | LO PR | 109 | 116 | 127 | 135 | 116 | 123 | 134 | 143 | 120 | 128 | 139 | 148 | 126 | 134 | 146 | 156 | 132 | 141 | 153 | 163 | 137 | 145 | 159 | 169 |
| | 1875 | MBh | 65.7 | 66.9 | 70.1 | 74.8 | 64.1 | 65.4 | 68.5 | 73.0 | 62.6 | 63.8 | 66.8 | 71.3 | 61.1 | 62.3 | 65.2 | 69.6 | 58.0 | 59.1 | 61.9 | 66.1 | 53.7 | 54.8 | 57.4 | 61.2 |
| | | S/T | 0.82 | 0.80 | 0.72 | 0.58 | 0.85 | 0.82 | 0.74 | 0.60 | 0.88 | 0.85 | 0.76 | 0.62 | 0.90 | 0.87 | 0.79 | 0.64 | 0.94 | 0.91 | 0.82 | 0.66 | 0.95 | 0.91 | 0.82 | 0.67 |
| | | ΔT | 27 | 26 | 25 | 21 | 27 | 26 | 25 | 22 | 27 | 26 | 25 | 22 | 27 | 27 | 25 | 22 | 27 | 26 | 25 | 21 | 25 | 25 | 23 | 20 |
| | | kW | 5.06 | 5.15 | 5.30 | 5.46 | 5.41 | 5.51 | 5.67 | 5.84 | 5.72 | 5.83 | 6.00 | 6.19 | 5.99 | 6.11 | 6.30 | 6.49 | 6.22 | 6.35 | 6.54 | 6.75 | 6.42 | 6.55 | 6.76 | 6.97 |
| | | HI PR | 235 | 253 | 268 | 279 | 264 | 284 | 300 | 313 | 301 | 323 | 341 | 356 | 342 | 368 | 389 | 406 | 385 | 414 | 438 | 456 | 425 | 458 | 483 | 504 |
| | | LO PR | 106 | 113 | 123 | 131 | 112 | 119 | 130 | 139 | 116 | 124 | 135 | 144 | 122 | 130 | 142 | 151 | 128 | 136 | 149 | 159 | 133 | 141 | 154 | 164 |

IDB = Entering Indoor Dry Bulb Temperature
High and low pressures are measured at the liquid and suction service valves.

Shaded area reflects AHRI (TVA) Rating conditions

kW = Total system power
Amps = outdoor unit amps (comp.+fan)

# Dimensions

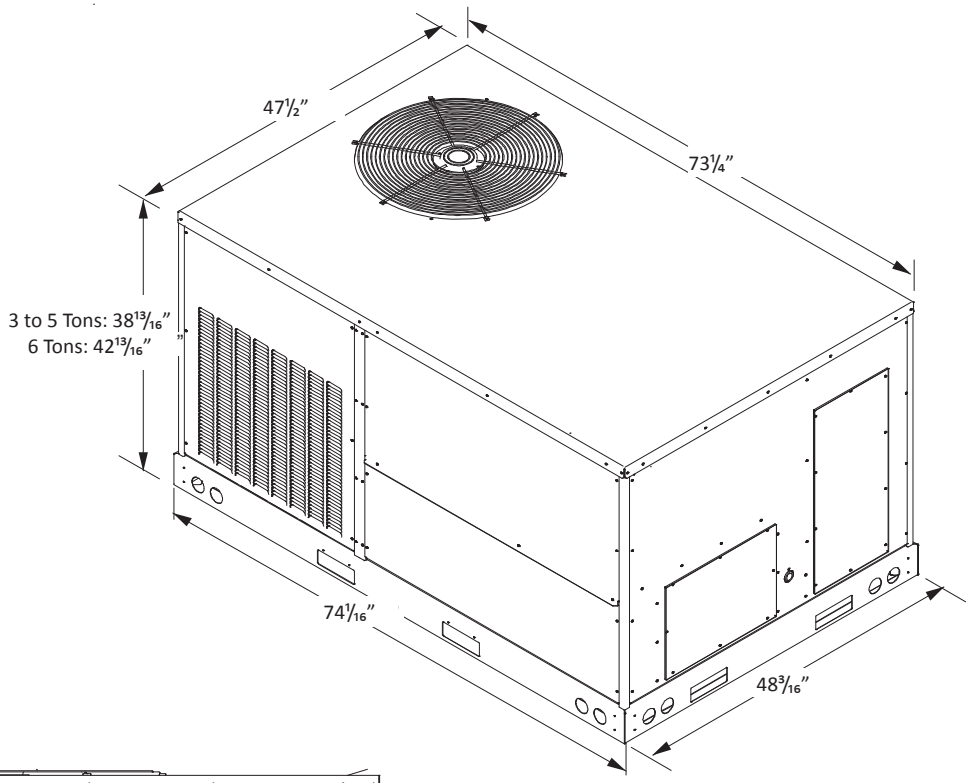


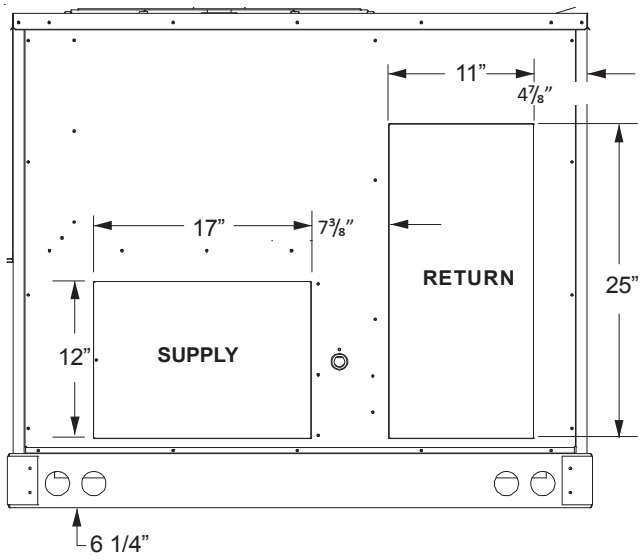


Horizontal Discharge

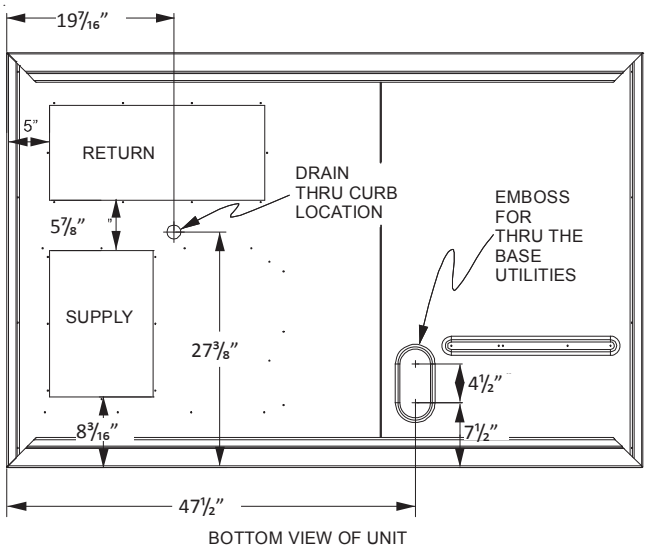


Vertical Discharge

## Unit Clearances

Maintain an adequate clearance around the unit for safety, service, maintenance, and proper unit operation. Leave a total clearance of 75” on the main control panel side of the unit for possible removal of fan shaft, coil, electric heat, and gas furnace. Leave a clearance of 48” on all other sides of the unit for possible compressor removal or service access, and to ensure proper ventilation and condenser airflow. Do not install the unit beneath any obstruction. Install the unit away from all building exhausts to inhibit ingestion of exhaust air into the unit’s fresh-air intake.

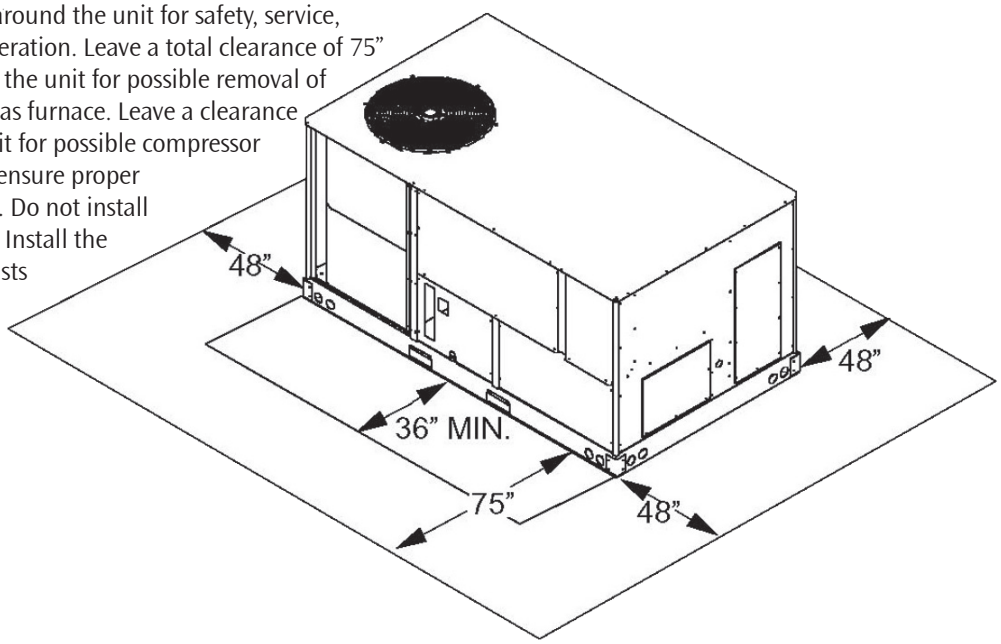


## Electrical Entrance Locations

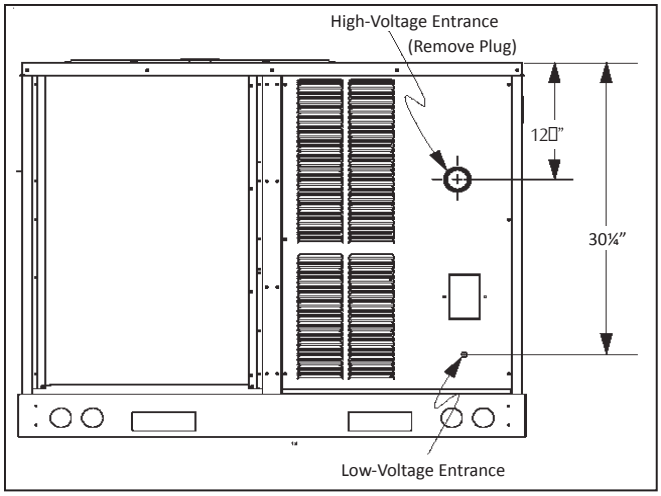


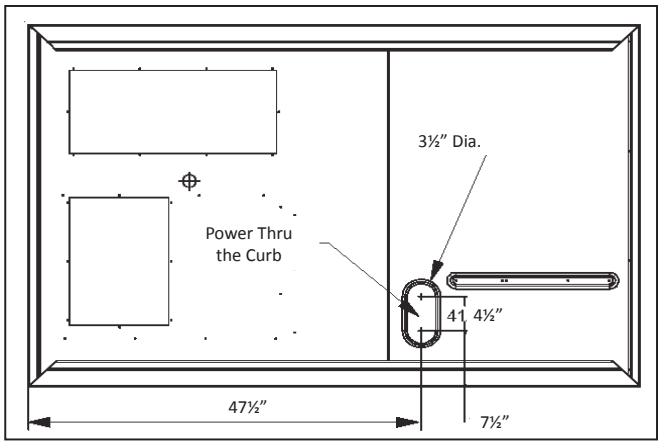

## Roof Curb Installation — Rigging

Provisions for forks have been included in the unit base frame. No other fork locations are approved.

- Unit must be lifted by the four lifting holes located at the base frame corners.
- Lifting cables should be attached to the unit with shackles.
- The distance between the crane hook and the top of the unit must not be less than 60”.
- Two spreader bars must span over the unit to prevent damage to the cabinet by the lift cables. Spreader bars must be of sufficient length so that cables do not come in contact with the unit during transport. Remove wood struts mounted beneath unit base frame before setting unit on roof curb. These struts are intended to protect unit base frame from fork lift damage. To remove the struts, extract the sheet metal retainers and pull the struts through the base of the unit. Refer to rigging label on the unit.

***Important:*** If using bottom discharge with roof curb, duct-work should be attached to the curb prior to installing the unit. Duct-work dimensions are shown in Roof Curb Installation Instructions Manual.

Refer to the Roof Curb Installation Instructions for proper curb installation. Curbing must be installed in compliance with the National Roofing Contractors Association Manual.

Lower unit carefully onto roof mounting curb. While rigging the unit, the center of gravity will cause the condenser end to be lower than the supply air end.

Bring condenser end of unit into alignment with the curb. With condenser end of the unit resting on curb member and using curb as a fulcrum, lower opposite end of the unit until entire unit is seated on the curb. When a rectangular cantilever curb is used, take care to center the unit. Check for proper alignment and orientation of supply and return openings with duct.

### Corner & Center-of-Gravity Locations

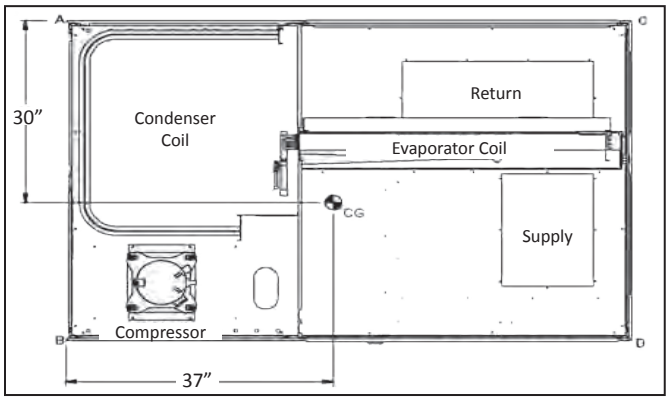


| Unit Weights | 3-Ton Weights | 4-Ton Weights | 5-Ton Weights | 6-Ton Weights |
|---|---|---|---|---|
| Corner Weight (A) | 100 | 110 | 115 | 130 |
| Corner Weight (B) | 170 | 180 | 195 | 215 |
| Corner Weight (C) | 105 | 110 | 120 | 130 |
| Corner Weight (D) | 170 | 180 | 195 | 215 |
| Unit Shipping Weight | 550 | 595 | 625 | 715 |
| Unit Operating Weight | 525 | 570 | 600 | 690 |

**Note:** Weights are calculated without accessories installed.

# Roof Curb Installation (cont.)

Curb installations must comply with local codes and should follow the established guidelines of the National Roofing Contractors Association.

Proper unit installation requires that the roof curb be firmly and permanently attached to the roof structure. Check for adequate fastening method prior to setting the unit on the curb.

Full perimeter roof curbs are available from the factory and are shipped unassembled. The installing contractor is responsible for field assembly, squaring, leveling, and mounting on the roof structure. All required hardware necessary for the assembly of the sheet metal curb is included in the curb accessory package.

- Determine sufficient structural support before locating and mounting the curb and package unit.
- Duct-work must be constructed using industry guidelines. The duct-work must be placed into the roof curb before mounting the package unit. Our full perimeter curbs include duct connection frames to be assembled with the curb. Cantilevered-type curbs are not available from the factory.
- Contractor furnishes curb insulation, cant strips, flashing, and general roofing material.
- Support curbs on parallel sides with roof members. To prevent damage to the unit, the roof members cannot penetrate supply and return duct openings.

***Note:*** The unit and curb accessories are designed to allow vertical duct installation before unit placement. Duct installation after unit placement is not recommended.

See the manual shipped with the roof curb for assembly and installation instructions.

## 3-D View

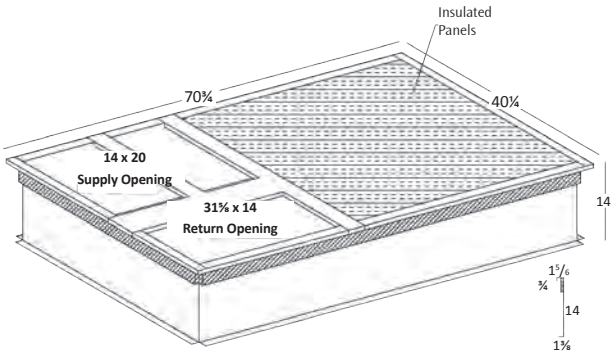


## Top View

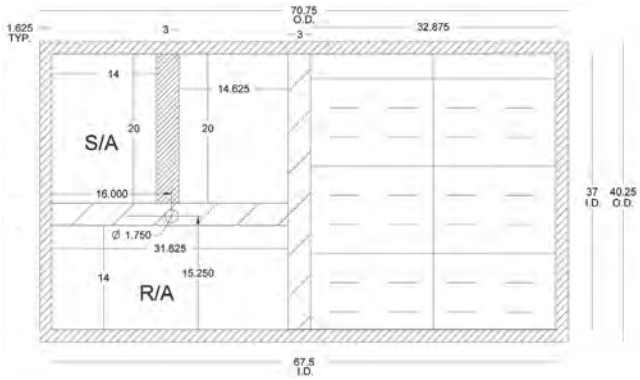

# WIRING DIAGRAM — CPG0360451D (SINGLE-PHASE, DIRECT DRIVE)

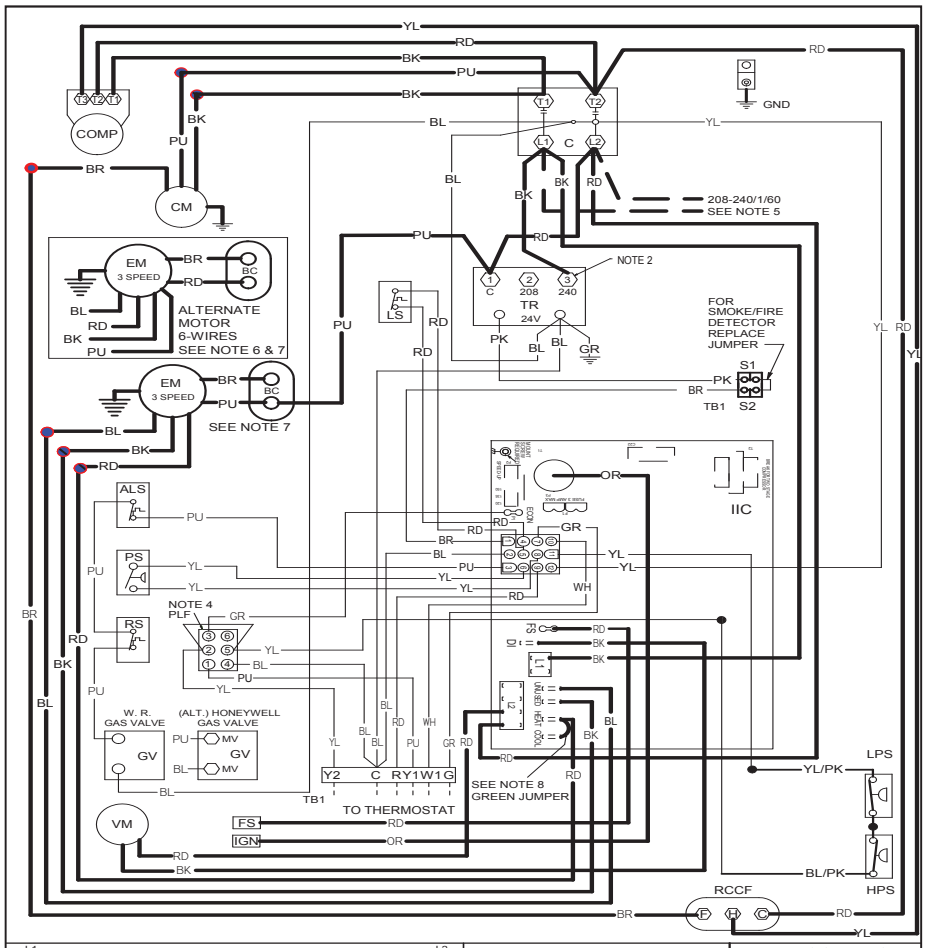


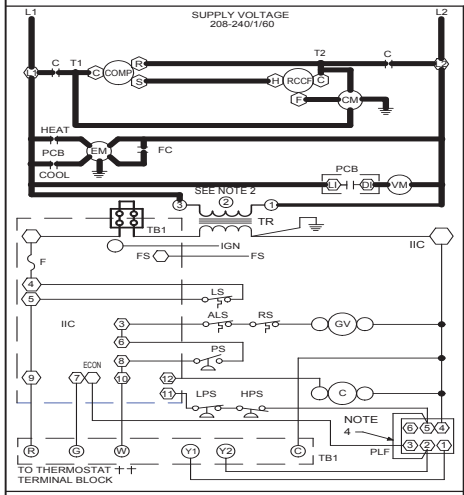


## INSTALLER/SERVICEMAN

THE STATUS LIGHT ON THE FURNACE CONTROL MAY BE USED AS A GUIDE TO TROUBLESHOOTING THIS APPLIANCE. STATUS LIGHT CODES ARE AS FOLLOWS:

| STATUS LIGHT | EQUIP. STATUS | CHECK |
|---|---|---|
| ON | NORMAL OPERATION | — |
| OFF | NO POWER OR<br>INTERNAL CONTROL FAULT | CHECK INPUT POWER<br>CHECK FUSE ON CONTROL<br>REPLACE CONTROL |
| 1 BLINK | IGNITION FAILURE<br>OR<br>OPEN ROLLOUT SWITCH<br>OR<br>OPEN AUX. LIMIT SWITCH | GAS FLOW<br>GAS PRESSURE<br>GAS VALVE<br>FLAME SENSOR<br>FLAME ROLLOUT<br>BAD SWITCH<br>AUX. LIMIT OPEN |
| 2 BLINKS | PRESSURE SWITCH OPEN | CHECK PRESSURE SWITCH |
| 3 BLINKS | PRESSURE SWITCH CLOSED WITHOUT INDUCER ON | CHECK PRESSURE SWITCH |
| 4 BLINKS | OPEN LIMIT SWITCH | MAIN LIMIT OPEN<br>BAD SWITCH |
| 5 BLINKS | FALSE FLAME SENSED | STICKING GAS VALVE |
| 6 BLINKS | COMPRESSOR OUTPUT DELAY | 3 MIN. COMP. ANTI-CYCLE TIMER |

COMPONENT LEGEND

| | |
|---|---|
| ALS | AUXILLARY LIMIT SWITCH |
| COMP | COMPRESSOR |
| CM | CONDENSER MOTOR |
| C | CONTACTOR |
| EM | EVAPORATOR MOTOR |
| F | FUSE |
| FS | FLAME SENSOR |
| GND | EQUIPMENT GROUND |
| GV | GAS VALVE |
| HPS | HIGH PRESSURE SWITCH |
| IIC | INTEGRATED IGNITION CONTROL |
| IGN | IGNITOR |
| LS | LIMIT SWITCH |
| LPS | LOW PRESSURE SWITCH |
| PLF | FEMALE PLUG/CONNECTOR |
| PS | PRESSURE SWITCH |
| RCCF | RUN CAPACITOR FOR CONDENSER FAN |
| RS | ROLLOUT SWITCH |
| TB1 | TERMINAL BLOCK (24V SIGNAL) |
| TR | TRANSFORMER |
| VM | VENT MOTOR |
| VMR | VENT MOTOR RELAY |
| BC | BLOWER CAPACITOR |

NOTES

1. REPLACEMENT WIRE MUST BE THE SAME SIZE AND TYPE OF INSULATION AS ORIGINAL. (USE COPPER CONDUCTOR ONLY).
2. FOR 208 VOLT TRANSFORMER OPERATION MOVE BLACK WIRE FROM TERMINAL (3) TO TERMINAL (2) ON TRANSFORMER.
3. FOR DIFFERENT THAN FACTORY SPEED TAP. CHANGE COOLING SPEED AT COOL TERMINAL. CHANGE HEATING SPEED AT HEAT TERMINAL ON CONTROL BOARD
   3 SPEED MOTOR
   RD - LOW SPEED
   BL - MED. SPEED
   BK - HIGH SPEED
4. ACCESSORY ECONOMIZER PLUG ADJACENT TO BLOWER HOUSING IN RETURN AIR COMPARTMENT. REMOVE MALE PLUG AND ATTACH FEMALE PLUG TO ECONOMIZER ACCESSORY.
5. USE COPPER CONDUCTORS ONLY.
   ++ USE NEC CLASS 2 WIRE.
6. PURPLE WIRE CONNECTS TO TRANSFORMER (PIN 1).
7. SPEED TAP TERMINATIONS SHOWN ON DIAGRAM ARE REPRESENTATIVE, BUT ACTUAL FACTORY SETTING MAY BE DIFFERENT BASED ON HEATING VALUE AND CAPACITY OF UNIT.
8. TO RUN DIFFERENT SPEED FOR HEATING AND COOLING, DISCONNECT GEEEN JUMPER FROM "COOL" TERMINAL AND REPLACE WITH APPROPRIATE SPEED TAP. THEN PLACE DISCONNECTED END OF JUMPER ON "UNUSED" TERMINAL LEFT OPEN BY MOVING THE SPEED TAP.

SEE UNIT RATING PLATE FOR TYPE AND SIZE OF OVERCURRENT PROTECTION.

208-240/1/60 0140L00510 REV A

FACTORY WIRING
LINE VOLTAGE
LOW VOLTAGE
OPTIONAL HIGH VOLTAGE

FIELD WIRING
HIGH VOLTAGE
LOW VOLTAGE

WIRE CODE

| | |
|---|---|
| BK | BLACK |
| BL | BLUE |
| BR | BROWN |
| GR | GREEN |
| OR | ORANGE |
| PK | PINK |
| PU | PURPLE |
| RD | RED |
| WH | WHITE |
| YL | YELLOW |
| BL/PK | BLUE WITH PINK STRIP |
| YL/PK | YELLOW WITH PINK STRIP |

THERMOSTAT FIELD WIRING ++

NO ECONOMIZER

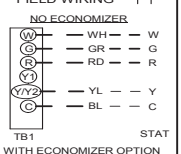


WITH ECONOMIZER OPTION

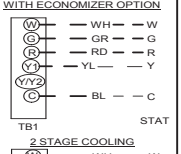


2 STAGE COOLING

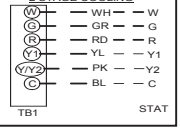


**WARNING**

**High Voltage:** Disconnect all power before servicing or installing this unit. Multiple power sources may be present. Failure to do so may cause property damage, personal injury, or death.

Wiring is subject to change. Always refer to the wiring diagram or the unit for the most up-to-date wiring.

# WIRING DIAGRAM — CPG036/480901D (SINGLE-PHASE DIRECT DRIVE)

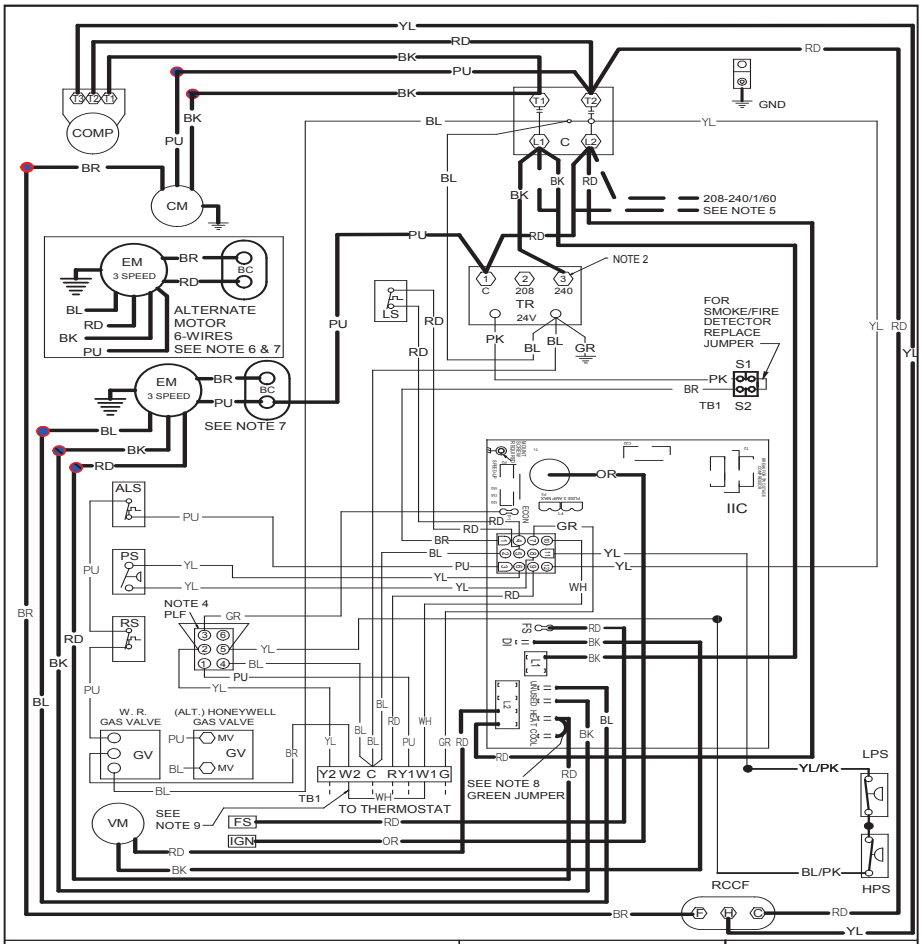


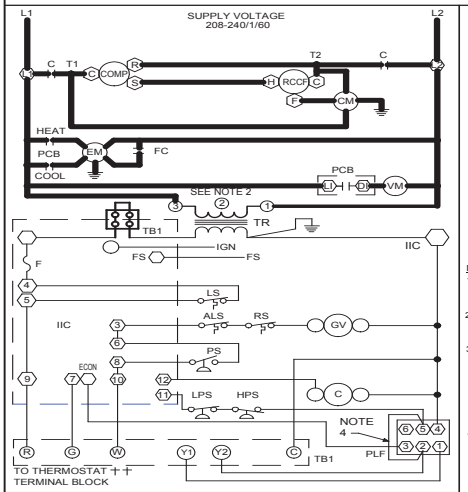


## INSTALLER/SERVICEMAN

THE STATUS LIGHT ON THE FURNACE CONTROL MAY BE USED AS A GUIDE TO TROUBLESHOOTING THIS APPLIANCE. STATUS LIGHT CODES ARE AS FOLLOWS:

| STATUS LIGHT | EQUIP. STATUS | CHECK |
|---|---|---|
| ON | NORMAL OPERATION | |
| OFF | NO POWER OR INTERNAL CONTROL FAULT | CHECK INPUT POWER CHECK FUSE ON CONTROL REPLACE CONTROL |
| 1 BLINK | IGNITION FAILURE OR OPEN ROLLOUT SWITCH OR OPEN AUX. LIMIT SWITCH | GAS FLOW GAS PRESSURE GAS VALVE FLAME SENSOR FLAME ROLLOUT BAD SWITCH AUX. LIMIT OPEN |
| 2 BLINKS | PRESSURE SWITCH OPEN | CHECK PRESSURE SWITCH |
| 3 BLINKS | PRESSURE SWITCH CLOSED WITHOUT INDUCER ON | CHECK PRESSURE SWITCH |
| 4 BLINKS | OPEN LIMIT SWITCH | MAIN LIMIT OPEN BAD SWITCH |
| 5 BLINKS | FALSE FLAME SENSED | STICKING GAS VALVE |
| 6 BLINKS | COMPRESSOR OUTPUT DELAY | 3 MIN. COMP. ANTI-CYCLE TIMER |

COMPONENT LEGEND

| | |
|---|---|
| ALS | AUXILLARY LIMIT SWITCH |
| COMP | COMPRESSOR |
| CM | CONDENSER MOTOR |
| C | CONTACTOR |
| EM | EVAPORATOR MOTOR |
| F | FUSE |
| FS | FLAME SENSOR |
| GND | EQUIPMENT GROUND |
| GV | GAS VALVE |
| HPS | HIGH PRESSURE SWITCH |
| IIC | INTEGRATED IGNITION CONTROL |
| IGN | IGNITOR |
| LS | LIMIT SWITCH |
| LPS | LOW PRESSURE SWITCH |
| PLF | FEMALE PLUG/CONNECTOR |
| RCCF | RUN CAPACITOR FOR CONDENSER FAN |
| PS | PRESSURE SWITCH |
| RS | ROLLOUT SWITCH |
| TB1 | TERMINAL BLOCK (24V SIGNAL) |
| TR | TRANSFORMER |
| VM | VENT MOTOR |
| VMR | VENT MOTOR RELAY |
| BC | BLOWER CAPACITOR |

NOTES

1. REPLACEMENT WIRE MUST BE THE SAME SIZE AND TYPE OF INSULATION AS ORIGINAL. (USE COPPER CONDUCTOR ONLY).
2. FOR 208 VOLT TRANSFORMER OPERATION MOVE BLACK WIRE FROM TERMINAL (5) TO TERMINAL (2) ON TRANSFORMER.
3. FOR DIFFERENT THAN FACTORY SPEED TAP. CHANGE COOLING SPEED AT COOL TERMINAL. CHANGE HEATING SPEED AT HEAT TERMINAL ON CONTROL BOARD
   3 SPEED MOTOR
   RD - LOW SPEED
   BL - MED. SPEED
   BK - HIGH SPEED
4. ACCESSORY ECONOMIZER PLUG ADJACENT TO BLOWER HOUSING IN RETURN AIR COMPARTMENT. REMOVE MALE PLUG AND ATTACH FEMALE PLUG TO ECONOMIZER ACCESSORY.
5. USE COPPER CONDUCTORS ONLY. ++ USE NEC CLASS 2 WIRE.
6. PURPLE WIRE CONNECTS TO TRANSFORMER (PIN 1).
7. SPEED TAP TERMINATIONS SHOWN ON DIAGRAM ARE REPRESENTATIVE, BUT ACTUAL FACTORY SETTING MAY BE DIFFERENT BASED ON HEATING VALUE AND CAPACITY OF UNIT.
8. TO RUN DIFFERENT SPEED FOR HEATING AND COOLING, DISCONNECT GEEEN JUMPER FROM "COOL" TERMINAL AND REPLACE WITH APPROPRIATE SPEED TAP. THEN PLACE DISCONNECTED END OF JUMPER ON "UNUSED" TERMINAL LEFT OPEN BY MOVING THE SPEED TAP.
9. FOR LOW STAGE OPERATION ONLY, REMOVE WHITE JUMPER. FOR 2 STAGE OPERATION, REMOVE JUMPER AND CONNECT W2 TO W1 ON THERMOSTAT.

SEE UNIT RATING PLATE FOR TYPE AND SIZE OF OVERCURRENT PROTECTION.

208-240/1/60 0140L00506 REV A

FACTORY WIRING
LINE VOLTAGE
LOW VOLTAGE
OPTIONAL HIGH VOLTAGE

FIELD WIRING
HIGH VOLTAGE
LOW VOLTAGE

WIRE CODE

| | |
|---|---|
| BK | BLACK |
| BL | BLUE |
| BR | BROWN |
| GR | GREEN |
| OR | ORANGE |
| PK | PINK |
| PU | PURPLE |
| RD | RED |
| WH | WHITE |
| YL | YELLOW |
| BL/PK | BLUE WITH PINK STRIP |
| YL/PK | YELLOW WITH PINK STRIP |

THERMOSTAT FIELD WIRING ++

NO ECONOMIZER

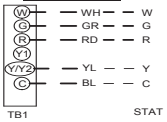


WITH ECONOMIZER OPTION

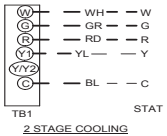


2 STAGE COOLING

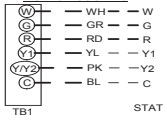


**WARNING**

**High Voltage:** Disconnect all power before servicing or installing this unit. Multiple power sources may be present. Failure to do so may cause property damage, personal injury, or death.

Wiring is subject to change. Always refer to the wiring diagram or the unit for the most up-to-date wiring.

# WIRING DIAGRAM — CPG060*1D (SINGLE-PHASE DIRECT DRIVE)

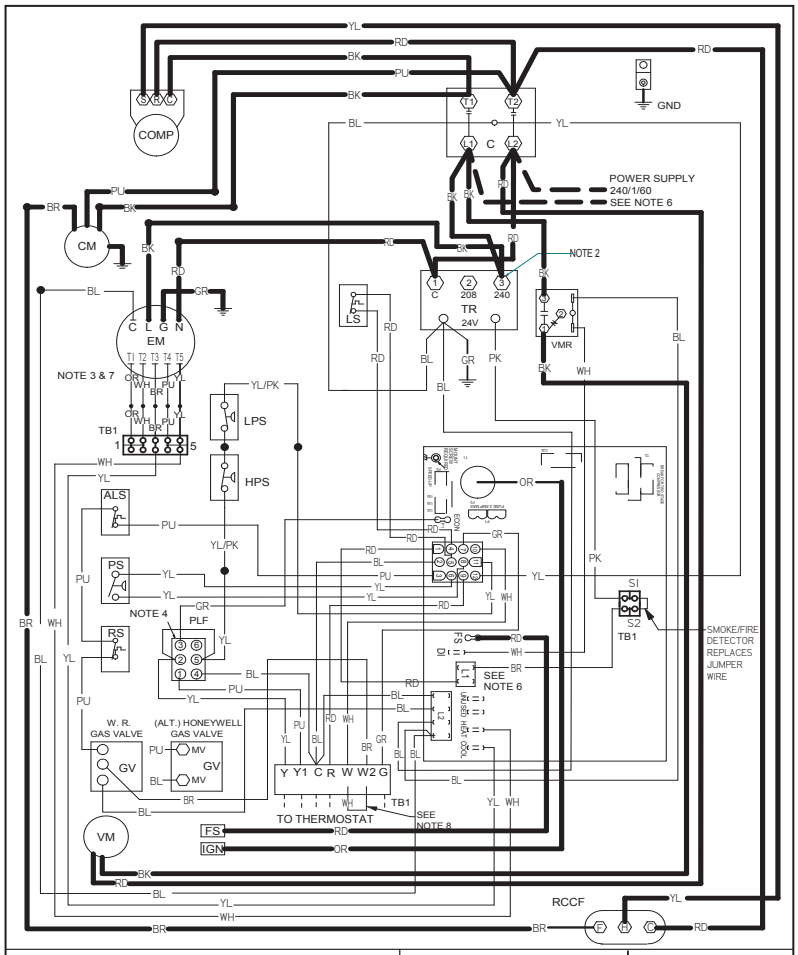


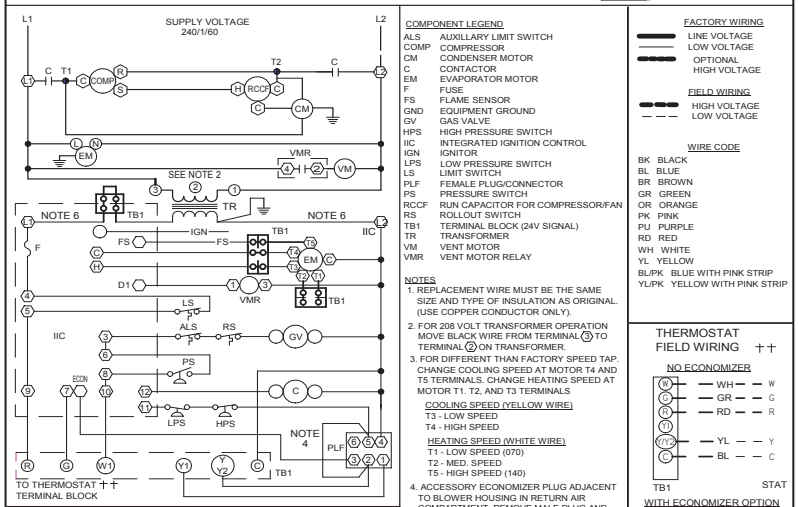


## INSTALLER/SERVICEMAN

THE STATUS LIGHT ON THE FURNACE CONTROL MAY BE USED AS A GUIDE TO TROUBLESHOOTING THIS APPLIANCE. STATUS LIGHT CODES ARE AS FOLLOWS:

| STATUS LIGHT | EQUIP. STATUS | CHECK |
|---|---|---|
| ON | NORMAL OPERATION | |
| OFF | NO POWER OR INTERNAL CONTROL FAULT | CHECK INPUT POWER CHECK FUSE ON CONTROL REPLACE CONTROL |
| 1 BLINK | IGNITION FAILURE OR OPEN ROLLOUT SWITCH OR OPEN AUX. LIMIT SWITCH | GAS FLOW GAS PRESSURE GAS VALVE FLAME SENSOR FLAME ROLLOUT BAD SWITCH AUX. LIMIT OPEN |
| 2 BLINKS | PRESSURE SWITCH OPEN | CHECK PRESSURE SWITCH |
| 3 BLINKS | PRESSURE SWITCH CLOSED WITHOUT INDUCER ON | CHECK PRESSURE SWITCH |
| 4 BLINKS | OPEN LIMIT SWITCH | MAIN LIMIT OPEN BAD SWITCH |
| 5 BLINKS | FALSE FLAME SENSED | STICKING GAS VALVE |
| 6 BLINKS | COMPRESSOR OUTPUT DELAY | 3 MIN. COMP. ANTI-CYCLE TIMER |

COMPONENT LEGEND

| | |
|---|---|
| ALS | AUXILLARY LIMIT SWITCH |
| COMP | COMPRESSOR |
| CM | CONDENSER MOTOR |
| C | CONTACTOR |
| EM | EVAPORATOR MOTOR |
| F | FUSE |
| FS | FLAME SENSOR |
| GND | EQUIPMENT GROUND |
| GV | GAS VALVE |
| HPS | HIGH PRESSURE SWITCH |
| IIC | INTEGRATED IGNITION CONTROL |
| IGN | IGNITOR |
| LPS | LOW PRESSURE SWITCH |
| LS | LIMIT SWITCH |
| PLF | FEMALE PLUG/CONNECTOR |
| PS | PRESSURE SWITCH |
| RCCF | RUN CAPACITOR FOR COMPRESSOR/FAN |
| RS | ROLLOUT SWITCH |
| TB1 | TERMINAL BLOCK (24V SIGNAL) |
| TR | TRANSFORMER |
| VM | VENT MOTOR |
| VMR | VENT MOTOR RELAY |

NOTES

1. REPLACEMENT WIRE MUST BE THE SAME SIZE AND TYPE OF INSULATION AS ORIGINAL. (USE COPPER CONDUCTOR ONLY).
2. FOR 208 VOLT TRANSFORMER OPERATION MOVE BLACK WIRE FROM TERMINAL (3) TO TERMINAL (2) ON TRANSFORMER.
3. FOR DIFFERENT THAN FACTORY SPEED TAP. CHANGE COOLING SPEED AT MOTOR T4 AND T5 TERMINALS. CHANGE HEATING SPEED AT MOTOR T1, T2, AND T3 TERMINALS

   COOLING SPEED (YELLOW WIRE)
   T3 - LOW SPEED
   T4 - HIGH SPEED

   HEATING SPEED (WHITE WIRE)
   T1 - LOW SPEED (070)
   T2 - MED. SPEED
   T5 - HIGH SPEED (140)
4. ACCESSORY ECONOMIZER PLUG ADJACENT TO BLOWER HOUSING IN RETURN AIR COMPARTMENT. REMOVE MALE PLUG AND ATTACH FEMALE PLUG TO ECONOMIZER ACCESSORY.
5. USE COPPER CONDUCTORS ONLY.
   ++ USE NEC CLASS 2 WIRE.
6. L1 AND L2 ON ICC CONTROL IS 24V INPUT.
7. SPEED TAP TERMINATIONS SHOWN ON DIAGRAM ARE REPRESENTATIVE, BUT ACTUAL FACTORY SETTINGS MAY BE DIFFERENT BASED ON THE HEATING VALUE OF THE UNIT.
8. FOR LOW STAGE OPERATION ONLY, REMOVE WHITE JUMPER. FOR 2 STAGE OPERATION, REMOVE JUMPER AND CONNECT W2 TO W2 ON THERMOSTAT.

SEE UNIT RATING PLATE FOR TYPE AND SIZE OF OVER CURRENT PROTECTION .

240/1/60 0140L00429 REV A

FACTORY WIRING
- LINE VOLTAGE
- LOW VOLTAGE
- OPTIONAL HIGH VOLTAGE

FIELD WIRING
- HIGH VOLTAGE
- LOW VOLTAGE

WIRE CODE

| | |
|---|---|
| BK | BLACK |
| BL | BLUE |
| BR | BROWN |
| GR | GREEN |
| OR | ORANGE |
| PK | PINK |
| PU | PURPLE |
| RD | RED |
| WH | WHITE |
| YL | YELLOW |
| BL/PK | BLUE WITH PINK STRIP |
| YL/PK | YELLOW WITH PINK STRIP |

THERMOSTAT FIELD WIRING ++

NO ECONOMIZER




WITH ECONOMIZER OPTION

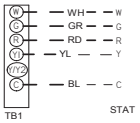


2 STAGE COOLING

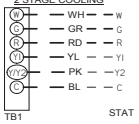


**High Voltage:** Disconnect all power before servicing or installing this unit. Multiple power sources may be present. Failure to do so may cause property damage, personal injury, or death.

**WARNING**

Wiring is subject to change. Always refer to the wiring diagram or the unit for the most up-to-date wiring.

# WIRING DIAGRAM — CPG060*3D (THREE-PHASE, DIRECT DRIVE)

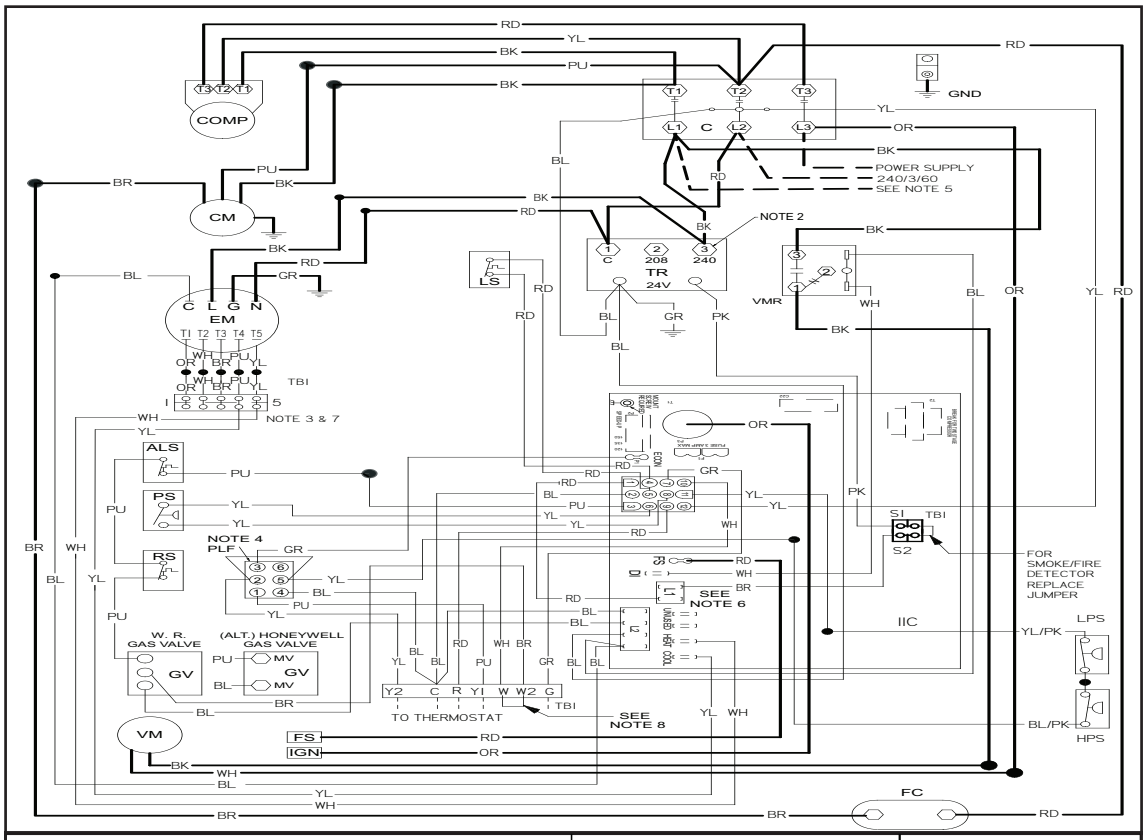


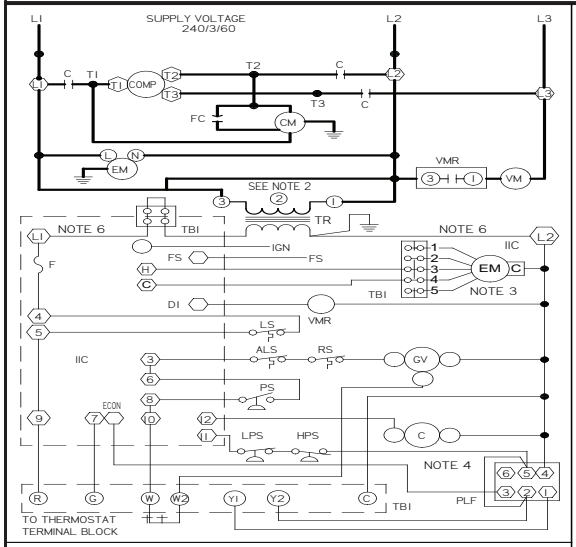


## INSTALLER/SERVICEMAN

THE STATUS LIGHT ON THE FURNACE CONTROL MAY BE USED AS A GUIDE TO TROUBLESHOOTING THIS APPLIANCE. STATUS LIGHT CODES ARE AS FOLLOWS.

| STATUS LIGHT | EQUIP. STATUS | CHECK |
|---|---|---|
| ON | NORMAL OPERATION | – |
| OFF | NO POWER OR INTERNAL CONTROL FAULT | CHECK INPUT POWER CHECK FUSE ON CONTROL REPLACE CONTROL |
| 1 BLINK | IGNITION FAILURE OR OPEN ROLLOUT SWITCH OR OPEN AUX LIMIT SWITCH | GAS FLOW GAS PRESSURE GAS VALVE FLAME SENSOR FLAME ROLLOUT BAD SWITCH AUX. LIMIT OPEN |
| 2 BLINKS | PRESSURE SWITCH OPEN | CHECK PRESSURE SWITCH |
| 3 BLINKS | PRESSURE SWITCH CLOSED WITHOUT INDUCER ON | CHECK PRESSURE SWITCH |
| 4 BLINKS | OPEN LIMIT SWITCH | MAIN LIMIT OPEN BAD SWITCH |
| 5 BLINKS | FALSE FLAME SENSED | STICKING GAS VALVE |
| 6 BLINKS | COMPRESSOR OUTPUT DELAY | 3 MIN. COMP. ANTI-CYCLE TIMER |

COMPONENT LEGEND

| | |
|---|---|
| ALS | AUXILIARY LIMIT SWITCH |
| COMP | COMPRESSOR |
| CM | CONDENSER MOTOR |
| C | CONTACTOR |
| EM | EVAPORATOR MOTOR |
| F | FUSE |
| FC | FAN CAPACITOR |
| FS | FLAME SENSOR |
| GND | EQUIPMENT GROUND |
| GV | GAS VALVE |
| HPS | HIGH PRESSURE SWITCH |
| IIC | INTEGRATED IGNITION CONTROL |
| IGN | IGNITOR |
| LS | LIMIT SWITCH |
| **LPS** | **LOW PRESSURE SWITCH** |
| PLF | FEMALE PLUG/CONNECTOR |
| PS | PRESSURE SWITCH |
| RS | ROLLOUT SWITCH |
| TBI | TERMINAL BLOCK (24V SIGNAL) |
| TR | TRANSFORMER |
| VM | VENT MOTOR |
| VMR | VENT MOTOR RELAY |

NOTES

1. REPLACEMENT WIRE MUST BE THE SAME SIZE AND TYPE OF INSULATION AS ORIGINAL. (USE COPPER CONDUCTOR ONLY).
2. FOR 208 VOLT TRANSFORMER OPERATION MOVE BLACK WIRES FROM TERMINAL (3) TO TERMINAL (2) ON TRANSFORMER.
3. FOR DIFFERENT THAN FACTORY SPEED TAP. CHANGE COOLING SPEED AT MOTOR T3 AND T4 TERMINALS. CHANGE HEATING SPEED AT MOTOR T1. T2, AND T5 TERMINALS.

   COOLING SPEED (YELLOW WIRE)
   T3 – LOW SPEED
   T4 – HIGH SPEED

   HEATING SPEED (WHITE WIRE)
   T1 – LOW SPEED (070)
   T2 – MED. SPEED
   T5 – HIGH SPEED (140)
4. ACCESSORY ECONOMIZER PLUG ADJACENT TO BLOWER HOUSING IN RETURN AIR COMPARTMENT. REMOVE MALE PLUG AND ATTACH FEMALE PLUG TO ECONOMIZER ACCESSORY.
5. USE COPPER CONDUCTORS ONLY. ++ USE NEC CLASS 2 WIRE.
6. L1 AND L2 ON ICC CONTROL IS 24V INPUT.
7. SPEED TAP TERMINATIONS SHOWN ON DIAGRAM ARE REPRESENTATIVE, BUT ACTUAL FACTORY SETTINGS MAY BE DIFFERENT BASED ON THE HEATING VALUE OF THE UNIT.
8. FOR LOW STAGE OPERATION ONLY, REMOVE WHITE JUMPER FOR 2 STAGE OPERATION, REMOVE JUMPER AND CONNECT W2 TO W2 ON THERMOSTAT.

SEE UNIT RATING PLATE FOR TYPE AND SIZE OF OVER CURRENT PROTECTION

230/3/60 0140L00980 REV B

FACTORY WIRING
- LINE VOLTAGE
- LOW VOLTAGE
- OPTIONAL HIGH VOLTAGE

FIELD WIRING
- HIGH VOLTAGE
- LOW VOLTAGE

WIRE CODE

| | |
|---|---|
| BK | BLACK |
| BL | BLUE |
| BR | BROWN |
| GR | GREEN |
| OR | ORANGE |
| PK | PINK |
| PU | PURPLE |
| RD | RED |
| WH | WHITE |
| YL | YELLOW |
| BL/PK | BLUE WITH PINK STRIP |
| YL/PK | YELLOW WITH PINK STRIP |

THERMOSTAT FIELD WIRING ++

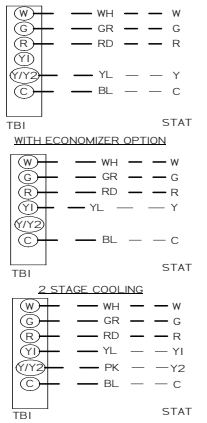


**High Voltage:** Disconnect all power before servicing or installing this unit. Multiple power sources may be present. Failure to do so may cause property damage, personal injury, or death.

**WARNING**

Wiring is subject to change. Always refer to the wiring diagram or the unit for the most up-to-date wiring.

# WIRING DIAGRAM — CPG036.48*3D (THREE-PHASE DIRECT DRIVE)

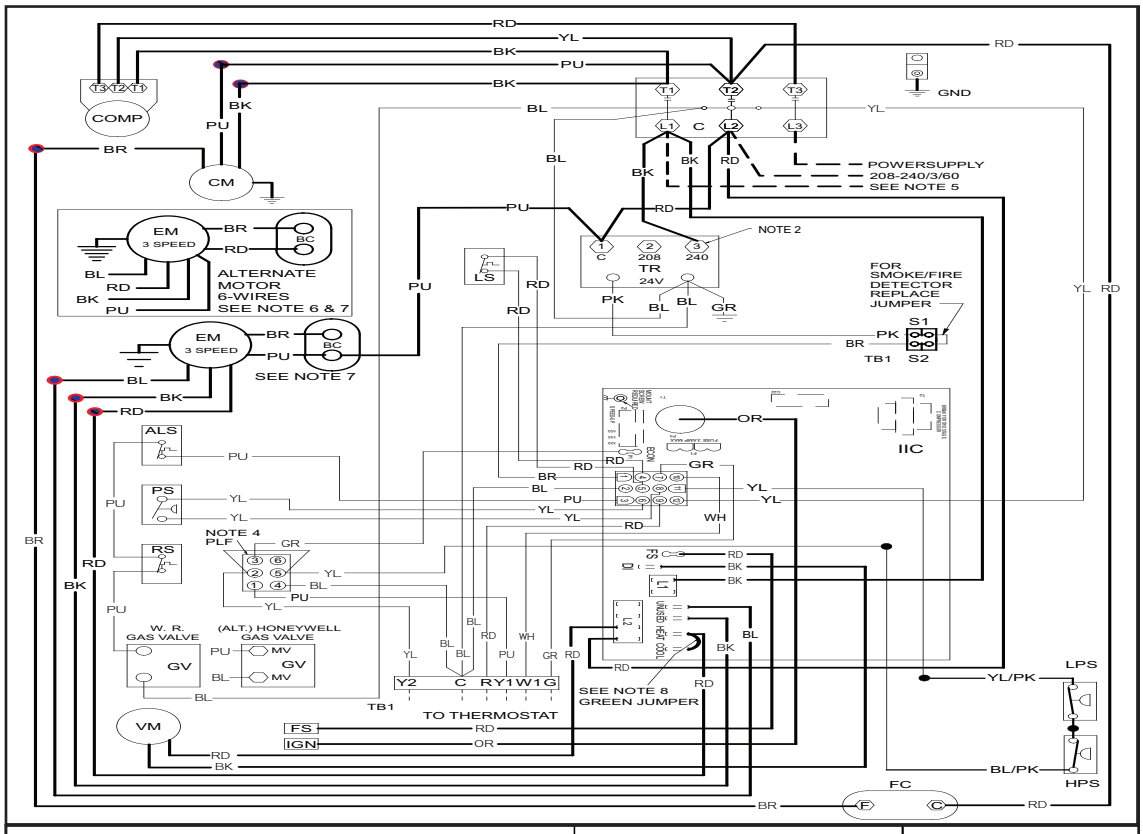


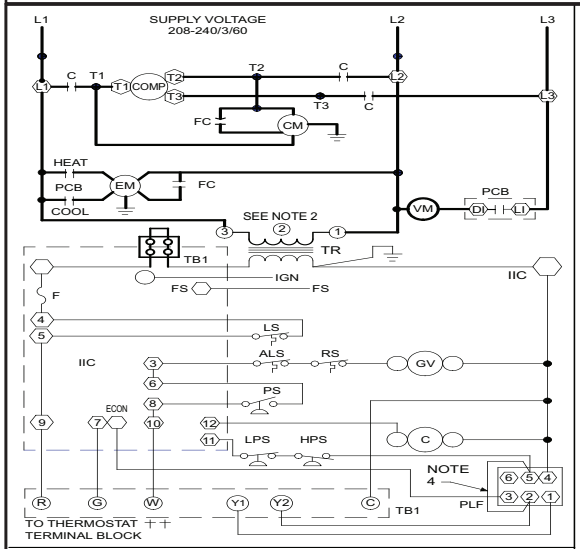


## INSTALLER/SERVICEMAN

THE STATUS LIGHT ON THE FURNACE CONTROL MAY BE USED AS A GUIDE TO TROUBLESHOOTING THIS APPLIANCE. STATUS LIGHT CODES ARE AS FOLLOWS:

| STATUS LIGHT | EQUIP. STATUS | CHECK |
|---|---|---|
| ON | NORMAL OPERATION | - |
| OFF | NO POWER OR<br>INTERNAL CONTROL FAULT | CHECK INPUT POWER<br>CHECK FUSE ON CONTROL<br>REPLACE CONTROL |
| 1 BLINK | IGNITION FAILURE<br>OR<br>OPEN ROLLOUT SWITCH<br>OR<br>OPEN AUX. LIMIT SWITCH | GAS FLOW<br>GAS PRESSURE<br>GAS VALVE<br>FLAME SENSOR<br>FLAME ROLLOUT<br>BAD SWITCH<br>AUX. LIMIT OPEN |
| 2 BLINKS | PRESSURE SWITCH OPEN | CHECK PRESSURE SWITCH |
| 3 BLINKS | PRESSURE SWITCH CLOSED WITHOUT INDUCER ON | CHECK PRESSURE SWITCH |
| 4 BLINKS | OPEN LIMIT SWITCH | MAIN LIMIT OPEN<br>BAD SWITCH |
| 5 BLINKS | FALSE FLAME SENSED | STICKING GAS VALVE |
| 6 BLINKS | COMPRESSOR OUTPUT DELAY | 3 MIN. COMP. ANTI-CYCLE TIMER |

COMPONENT LEGEND

| | |
|---|---|
| ALS | AUXILLARY LIMIT SWITCH |
| COMP | COMPRESSOR |
| CM | CONDENSER MOTOR |
| C | CONTACTOR |
| EM | EVAPORATOR MOTOR |
| F | FUSE |
| FC | FAN CAPACITOR |
| FS | FLAME SENSOR |
| GND | EQUIPMENT GROUND |
| GV | GAS VALVE |
| HPS | HIGH PRESSURE SWITCH |
| IIC | INTEGRATED IGNITION CONTROL |
| IGN | IGNITOR |
| LS | LIMIT SWITCH |
| LPS | LOW PRESSURE SWITCH |
| PLF | FEMALE PLUG/CONNECTOR |
| PS | PRESSURE SWITCH |
| RS | ROLLOUT SWITCH |
| TB1 | TERMINAL BLOCK (24V SIGNAL) |
| TR | TRANSFORMER |
| VM | VENT MOTOR |
| VMR | VENT MOTOR RELAY |
| BC | BLOWER CAPACITOR |

NOTES

1. REPLACEMENT WIRE MUST BE THE SAME SIZE AND TYPE OF INSULATION AS ORIGINAL. (USE COPPER CONDUCTOR ONLY).
2. FOR 208 VOLT TRANSFORMER OPERATION MOVE BLACK WIRE FROM TERMINAL ③ TO TERMINAL ② ON TRANSFORMER.
3. FOR DIFFERENT THAN FACTORY SPEED TAP. CHANGE COOLING SPEED AT COOL TERMINAL. CHANGE HEATING SPEED AT HEAT TERMINAL ON CONTROL BOARD
   3 SPEED MOTOR
   RD - LOW SPEED
   BL - MED. SPEED
   BK - HIGH SPEED
4. ACCESSORY ECONOMIZER PLUG ADJACENT TO BLOWER HOUSING IN RETURN AIR COMPARTMENT. REMOVE MALE PLUG AND ATTACH FEMALE PLUG TO ECONOMIZER ACCESSORY.
5. USE COPPER CONDUCTORS ONLY.
   ++ USE NEC CLASS 2 WIRE.
6. PURPLE WIRE CONNECTS TO TRANSFORMER (PIN 1).
7. SPEED TAP TERMINATIONS SHOWN ON DIAGRAM ARE REPRESENTATIVE, BUT ACTUAL FACTORY SETTING MAY BE DIFFERENT BASED ON HEATING VALUE AND CAPACITY OF UNIT.
8. TO RUN DIFFERENT SPEED FOR HEATING AND COOLING, DISCONNECT GEEEN JUMPER FROM "COOL" TERMINAL AND REPLACE WITH APPROPRIATE SPEED TAP. THEN PLACE DISCONNECTED END OF JUMPER ON "UNUSED" TERMINAL LEFT OPEN BY MOVING THE SPEED TAP.

SEE UNIT RATING PLATE FOR TYPE AND SIZE OF OVERCURRENT PROTECTION.

208-240/3/60 0140L00512 REV B

FACTORY WIRING
- LINE VOLTAGE
- LOW VOLTAGE
- OPTIONAL HIGH VOLTAGE

FIELD WIRING
- HIGH VOLTAGE
- LOW VOLTAGE

WIRE CODE

| | |
|---|---|
| BK | BLACK |
| BL | BLUE |
| BR | BROWN |
| GR | GREEN |
| OR | ORANGE |
| PK | PINK |
| PU | PURPLE |
| RD | RED |
| WH | WHITE |
| YL | YELLOW |
| BL/PK | BLUE WITH PINK STRIP |
| YL/PK | YELLOW WITH PINK STRIP |

THERMOSTAT FIELD WIRING ++

NO ECONOMIZER

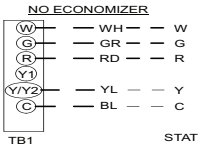


WITH ECONOMIZER OPTION

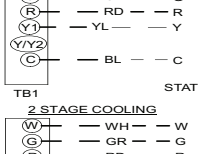


2 STAGE COOLING

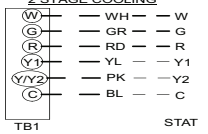


**WARNING**

**High Voltage:** Disconnect all power before servicing or installing this unit. Multiple power sources may be present. Failure to do so may cause property damage, personal injury, or death.

Wiring is subject to change. Always refer to the wiring diagram or the unit for the most up-to-date wiring.

# WIRING DIAGRAM — CPG036/48*3D (THREE-PHASE, DIRECT DRIVE)

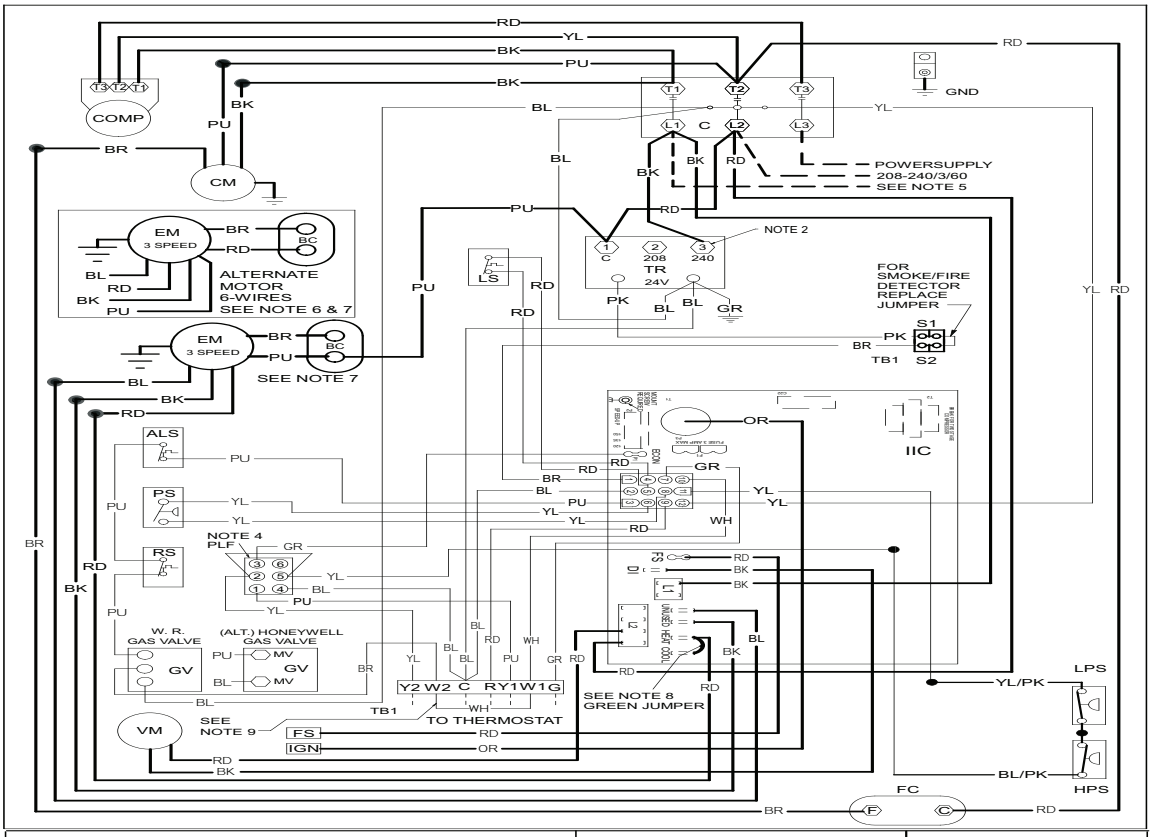


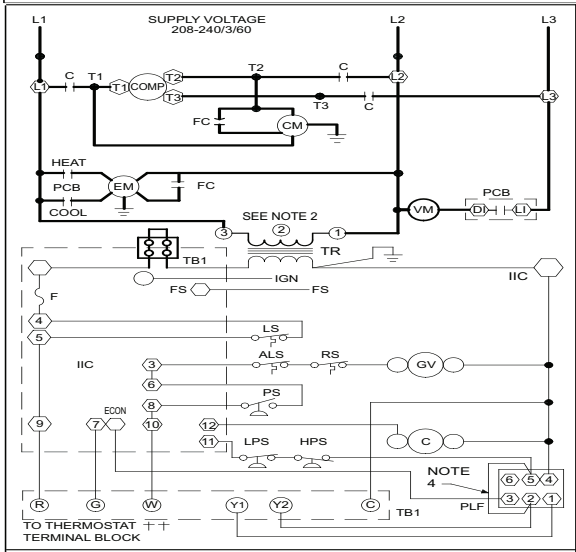


## INSTALLER/SERVICEMAN

THE STATUS LIGHT ON THE FURNACE CONTROL MAY BE USED AS A GUIDE TO TROUBLESHOOTING THIS APPLIANCE. STATUS LIGHT CODES ARE AS FOLLOWS:

| STATUS LIGHT | EQUIP. STATUS | CHECK |
|---|---|---|
| ON | NORMAL OPERATION | |
| OFF | NO POWER OR INTERNAL CONTROL FAULT | CHECK INPUT POWER CHECK FUSE ON CONTROL REPLACE CONTROL |
| 1 BLINK | IGNITION FAILURE OR OPEN ROLLOUT SWITCH OR OPEN AUX. LIMIT SWITCH | GAS FLOW GAS PRESSURE GAS VALVE FLAME SENSOR FLAME ROLLOUT BAD SWITCH AUX. LIMIT OPEN |
| 2 BLINKS | PRESSURE SWITCH OPEN | CHECK PRESSURE SWITCH |
| 3 BLINKS | PRESSURE SWITCH CLOSED WITHOUT INDUCER ON | CHECK PRESSURE SWITCH |
| 4 BLINKS | OPEN LIMIT SWITCH | MAIN LIMIT OPEN BAD SWITCH |
| 5 BLINKS | FALSE FLAME SENSED | STICKING GAS VALVE |
| 6 BLINKS | COMPRESSOR OUTPUT DELAY | 3 MIN. COMP. ANTI-CYCLE TIMER |

## COMPONENT LEGEND

| | |
|---|---|
| ALS | AUXILIARY LIMIT SWITCH |
| COMP | COMPRESSOR |
| CM | CONDENSER MOTOR |
| C | CONTACTOR |
| EM | EVAPORATOR MOTOR |
| F | FUSE |
| FC | FAN CAPACITOR |
| FS | FLAME SENSOR |
| GND | EQUIPMENT GROUND |
| GV | GAS VALVE |
| HPS | HIGH PRESSURE SWITCH |
| IIC | INTEGRATED IGNITION CONTROL |
| IGN | IGNITOR |
| LS | LIMIT SWITCH |
| LPS | LOW PRESSURE SWITCH |
| PLF | FEMALE PLUG/CONNECTOR |
| PS | PRESSURE SWITCH |
| RS | ROLLOUT SWITCH |
| TB1 | TERMINAL BLOCK (24V SIGNAL) |
| TR | TRANSFORMER |
| VM | VENT MOTOR |
| VMR | VENT MOTOR RELAY |
| BC | BLOWER CAPACITOR |

## NOTES

1. REPLACEMENT WIRE MUST BE THE SAME SIZE AND TYPE OF INSULATION AS ORIGINAL. (USE COPPER CONDUCTOR ONLY).
2. FOR 208 VOLT TRANSFORMER OPERATION MOVE BLACK WIRE FROM TERMINAL 3 TO TERMINAL 2 ON TRANSFORMER.
3. FOR DIFFERENT THAN FACTORY SPEED TAP. CHANGE COOLING SPEED AT COOL TERMINAL. CHANGE HEATING SPEED AT HEAT TERMINAL ON CONTROL BOARD
   3 SPEED MOTOR
   RD - LOW SPEED
   BL - MED. SPEED
   BK - HIGH SPEED
4. ACCESSORY ECONOMIZER PLUG ADJACENT TO BLOWER HOUSING IN RETURN AIR COMPARTMENT. REMOVE MALE PLUG AND ATTACH FEMALE PLUG TO ECONOMIZER ACCESSORY.
5. USE COPPER CONDUCTORS ONLY.
   ┼┼ USE NEC CLASS 2 WIRE.
6. PURPLE WIRE CONNECTS TO TRANSFORMER (PIN 1).
7. SPEED TAP TERMINATIONS SHOWN ON DIAGRAM ARE REPRESENTATIVE, BUT ACTUAL FACTORY SETTING MAY BE DIFFERENT BASED ON HEATING VALUE AND CAPACITY OF UNIT.
8. TO RUN DIFFERENT SPEED FOR HEATING AND COOLING, DISCONNECT GEEEN JUMPER FROM "COOL" TERMINAL AND REPLACE WITH APPROPRIATE SPEED TAP. THEN PLACE DISCONNECTED END OF JUMPER ON "UNUSED" TERMINAL LEFT OPEN BY MOVING THE SPEED TAP.
9. FOR LOW STAGE OPERATION ONLY, REMOVE WHITE JUMPER. FOR 2 STAGE OPERATION, REMOVE JUMPER AND CONNECT W2 TO W1 ON THERMOSTAT.

SEE UNIT RATING PLATE FOR TYPE AND SIZE OF OVERCURRENT PROTECTION.

208-240/3/60 0140L00507 REV B

FACTORY WIRING
LINE VOLTAGE
LOW VOLTAGE
OPTIONAL HIGH VOLTAGE

FIELD WIRING
HIGH VOLTAGE
LOW VOLTAGE

WIRE CODE

| | |
|---|---|
| BK | BLACK |
| BL | BLUE |
| BR | BROWN |
| GR | GREEN |
| OR | ORANGE |
| PK | PINK |
| PU | PURPLE |
| RD | RED |
| WH | WHITE |
| YL | YELLOW |
| BL/PK | BLUE WITH PINK STRIP |
| YL/PK | YELLOW WITH PINK STRIP |

THERMOSTAT FIELD WIRING ┼┼

NO ECONOMIZER

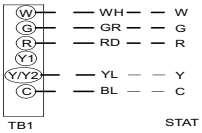


WITH ECONOMIZER OPTION

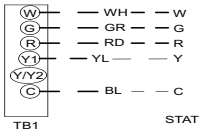


2 STAGE COOLING

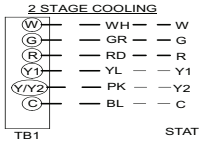


**WARNING**

**High Voltage:** Disconnect all power before servicing or installing this unit. Multiple power sources may be present. Failure to do so may cause property damage, personal injury, or death.

Wiring is subject to change. Always refer to the wiring diagram or the unit for the most up-to-date wiring.

# WIRING DIAGRAM — CPG036-600904B/7B — CPG036*4B/7B — CPG072*4B/7B (460V/575v, BELT DRIVE)

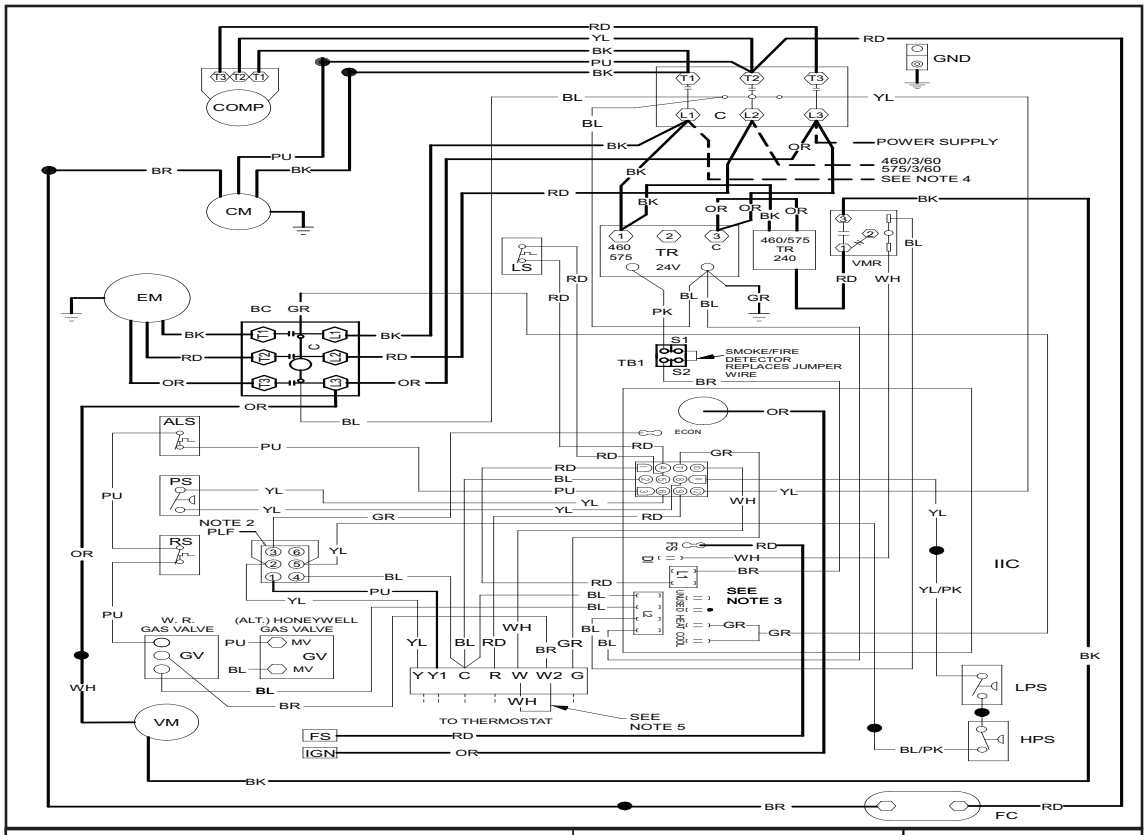


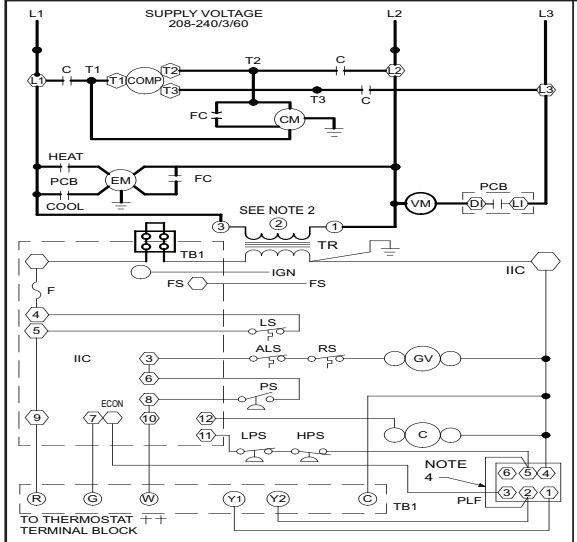


## INSTALLER/SERVICEMAN

THE STATUS LIGHT ON THE FURNACE CONTROL MAY BE USED AS A GUIDE TO TROUBLESHOOTING THIS APPLIANCE. STATUS LIGHT CODES ARE AS FOLLOWS:

| STATUS LIGHT | EQUIP. STATUS | CHECK |
|---|---|---|
| ON | NORMAL OPERATION | - |
| OFF | NO POWER OR INTERNAL CONTROL FAULT | CHECK INPUT POWER CHECK FUSE ON CONTROL REPLACE CONTROL |
| 1 BLINK | IGNITION FAILURE OR OPEN ROLLOUT SWITCH OR OPEN AUX. LIMIT SWITCH | GAS FLOW GAS PRESSURE GAS VALVE FLAME SENSOR FLAME ROLLOUT BAD SWITCH AUX. LIMIT OPEN |
| 2 BLINKS | PRESSURE SWITCH OPEN | CHECK PRESSURE SWITCH |
| 3 BLINKS | PRESSURE SWITCH CLOSED WITHOUT INDUCER ON | CHECK PRESSURE SWITCH |
| 4 BLINKS | OPEN LIMIT SWITCH | MAIN LIMIT OPEN BAD SWITCH |
| 5 BLINKS | FALSE FLAME SENSED | STICKING GAS VALVE |
| 6 BLINKS | COMPRESSOR OUTPUT DELAY | 3 MIN. COMP ANTI-CYCLE TIMER |

COMPONENT LEGEND

| | |
|---|---|
| ALS | AUXILIARY LIMIT SWITCH |
| COMP | COMPRESSOR |
| CM | CONDENSER MOTOR |
| C | CONTACTOR |
| EM | EVAPORATOR MOTOR |
| F | FUSE |
| FC | FAN CAPACITOR |
| FS | FLAME SENSOR |
| GND | EQUIPMENT GROUND |
| GV | GAS VALVE |
| HPS | HIGH PRESSURE SWITCH |
| IIC | INTEGRATED IGNITION CONTROL |
| IGN | IGNITOR |
| LS | LIMIT SWITCH |
| LPS | LOW PRESSURE SWITCH |
| PLF | FEMALE PLUG/CONNECTOR |
| PS | PRESSURE SWITCH |
| RS | ROLLOUT SWITCH |
| TB1 | TERMINAL BLOCK (24V SIGNAL) |
| TR | TRANSFORMER |
| VM | VENT MOTOR |
| VMR | VENT MOTOR RELAY |
| BC | BLOWER CAPACITOR |

NOTES

1. REPLACEMENT WIRE MUST BE THE SAME SIZE AND TYPE OF INSULATION AS ORIGINAL. (USE COPPER CONDUCTOR ONLY).
2. FOR 208 VOLT TRANSFORMER OPERATION MOVE BLACK WIRE FROM TERMINAL ③ TO TERMINAL ② ON TRANSFORMER.
3. FOR DIFFERENT THAN FACTORY SPEED TAP. CHANGE COOLING SPEED AT COOL TERMINAL. CHANGE HEATING SPEED AT HEAT TERMINAL ON CONTROL BOARD
   3 SPEED MOTOR
   RD - LOW SPEED
   BL - MED. SPEED
   BK - HIGH SPEED
4. ACCESSORY ECONOMIZER PLUG ADJACENT TO BLOWER HOUSING IN RETURN AIR COMPARTMENT. REMOVE MALE PLUG AND ATTACH FEMALE PLUG TO ECONOMIZER ACCESSORY.
5. USE COPPER CONDUCTORS ONLY.
   ++ USE NEC CLASS 2 WIRE.
6. PURPLE WIRE CONNECTS TO TRANSFORMER (PIN 1).
7. SPEED TAP TERMINATIONS SHOWN ON DIAGRAM ARE REPRESENTATIVE, BUT ACTUAL FACTORY SETTING MAY BE DIFFERENT BASED ON HEATING VALUE AND CAPACITY OF UNIT.
8. TO RUN DIFFERENT SPEED FOR HEATING AND COOLING, DISCONNECT GREEN JUMPER FROM "COOL" TERMINAL AND REPLACE WITH APPROPRIATE SPEED TAP. THEN PLACE DISCONNECTED END OF JUMPER ON "UNUSED" TERMINAL LEFT OPEN BY MOVING THE SPEED TAP.
9. FOR LOW STAGE OPERATION ONLY, REMOVE WHITE JUMPER. FOR 2 STAGE OPERATION, REMOVE JUMPER AND CONNECT W2 TO W1 ON THERMOSTAT.

SEE UNIT RATING PLATE FOR TYPE AND SIZE OF OVERCURRENT PROTECTION.

208-240/3/60 0140L00507 REV B

FACTORY WIRING
- LINE VOLTAGE
- LOW VOLTAGE
- OPTIONAL HIGH VOLTAGE

FIELD WIRING
- HIGH VOLTAGE
- LOW VOLTAGE

WIRE CODE

| | |
|---|---|
| BK | BLACK |
| BL | BLUE |
| BR | BROWN |
| GR | GREEN |
| OR | ORANGE |
| PK | PINK |
| PU | PURPLE |
| RD | RED |
| WH | WHITE |
| YL | YELLOW |
| BL/PK | BLUE WITH PINK STRIP |
| YL/PK | YELLOW WITH PINK STRIP |

THERMOSTAT FIELD WIRING ++

NO ECONOMIZER

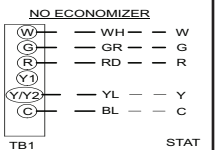


WITH ECONOMIZER OPTION

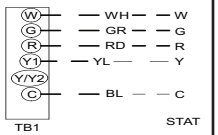


2 STAGE COOLING

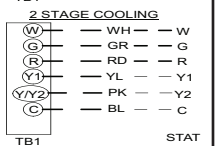


**WARNING** High Voltage: Disconnect all power before servicing or installing this unit. Multiple power sources may be present. Failure to do so may cause property damage, personal injury, or death.

Wiring is subject to change. Always refer to the wiring diagram or the unit for the most up-to-date wiring.

# WIRING DIAGRAM — CPG036/48/600903B — CPG072*3B (THREE-PHASE, BELT DRIVE)

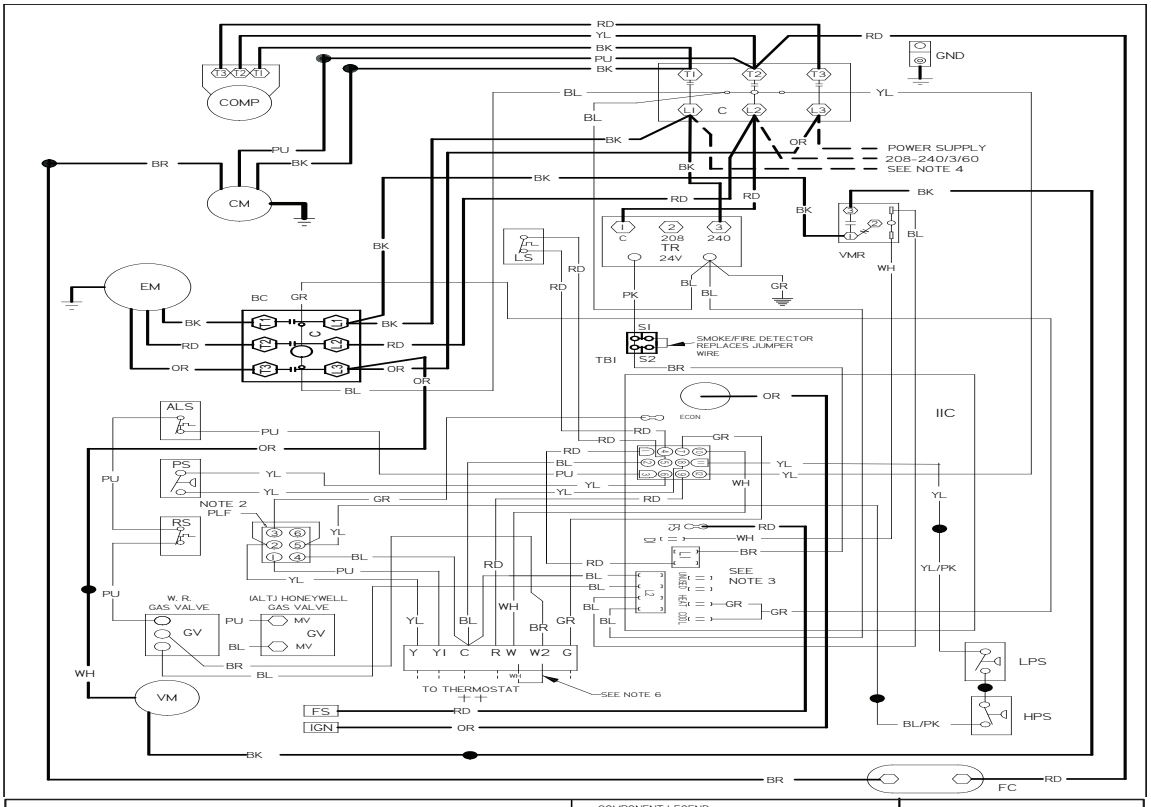


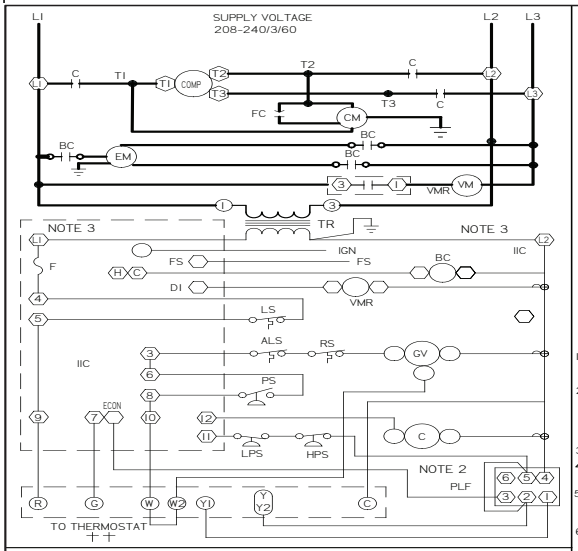


COMPONENT LEGEND

| | |
|---|---|
| ALS | AUXILIARY LIMIT SWITCH |
| BC | BLOWER CONTACTOR |
| COMP | COMPRESSOR |
| CM | CONDENSER MOTOR |
| C | CONTACTOR |
| EM | EVAPORATOR MOTOR |
| F | FUSE |
| FC | FAN CAPACITOR |
| FS | FLAME SENSOR |
| GND | EQUIPMENT GROUND |
| GV | GAS VALVE |
| HPS | HIGH PRESSURE SWITCH |
| IBR | INDOOR BLOWER RELAY |
| IIC | INTEGRATED IGNITION CONTROL |
| IGN | IGNITOR |
| LPS | LOW PRESSURE SWITCH |
| LS | LIMIT SWITCH |
| PLF | FEMALE PLUG/CONNECTOR |
| PS | PRESSURE SWITCH |
| RS | ROLLOUT SWITCH |
| TBI | TERMINAL BLOCK (24V SIGNAL) |
| TR | TRANSFORMER |
| VM | VENT MOTOR |
| VMR | VENT MOTOR RELAY |

NOTES

1. REPLACEMENT WIRE MUST BE THE SAME SIZE AND TYPE OF INSULATION AS ORIGINAL. (USE COPPER CONDUCTOR ONLY).
2. ACCESSORY ECONOMIZER PLUG ADJACENT TO BLOWER HOUSING IN RETURN AIR COMPARTMENT. REMOVE MALE PLUG AND ATTACH FEMALE PLUG TO THE ECONOMIZER ACCESSORY.
3. L1 AND L2 ON IIC CONTROL IS 24V INPUT.
4. **USE COPPER CONDUCTORS ONLY.**
   ++ USE NEC CLASS 2 WIRE.
5. FOR 208 VOLT TRANSFORMER OPERATION, MOVE BLACK WIRE FROM TERMINAL 3 TO TERMINAL 2 ON TRANSFORMER.
6. FOR LOW STAGE OPERATION ONLY, REMOVE WHITE JUMPER FOR 2 STAGE OPERATION, REMOVE JUMPER AND CONNECT W2 TO W2 ON THERMOSTAT.

SEE UNIT RATING PLATE FOR TYPE AND SIZE OF OVER CURRENT PROTECTION

208-240/3/60 0140L00981 REV B

FACTORY WIRING
- LINE VOLTAGE
- LOW VOLTAGE
- OPTIONAL HIGH VOLTAGE

FIELD WIRING
- HIGH VOLTAGE
- LOW VOLTAGE

WIRE CODE

| | |
|---|---|
| BK | BLACK |
| BL | BLUE |
| BR | BROWN |
| GR | GREEN |
| OR | ORANGE |
| PK | PINK |
| PU | PURPLE |
| RD | RED |
| WH | WHITE |
| YL | YELLOW |
| BL/PK | BLUE WITH PINK STRIP |
| YL/PK | YELLOW WITH PINK STRIP |

THERMOSTAT FIELD WIRING ++

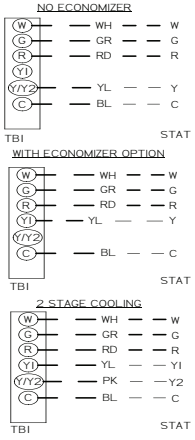


INSTALLER/SERVICEMAN

THE STATUS LIGHT ON THE FURNACE CONTROL MAY BE USED AS A GUIDE TO TROUBLESHOOTING THIS APPLIANCE. STATUS LIGHT CODES ARE AS FOLLOWS.

| STATUS LIGHT | EQUIP. STATUS | CHECK |
|---|---|---|
| ON | NORMAL OPERATION | - |
| OFF | NO POWER OR INTERNAL CONTROL | CHECK INPUT POWER<br>CHECK FUSE ON CONTROL<br>REPLACE CONTROL |
| 1 BLINK | IGNITION FAILURE<br>OPEN ROLLOUT SWITCH<br>OPEN AUX. LIMIT SWITCH | GAS FLOW<br>GAS PRESSURE<br>GAS VALVE<br>FLAME SENSOR<br>FLAME ROLLOUT BAD SWITCH<br>AUX. LIMIT OPEN |
| 2 BLINKS | PRESSURE SWITCH OPEN | CHECK PRESSURE SWITCH |
| 3 BLINKS | PRESSURE SWITCH CLOSED WITHOUT INDUCER ON | CHECK PRESSURE SWITCH |
| 4 BLINKS | OPEN LIMIT SWITCH | MAIN LIMIT OPEN BAD SWITCH |
| 5 BLINKS | FALSE FLAME SENSED | STICKING GAS VALVE |
| 6 BLINKS | COMPRESSOR OUTPUT DELAY | 3 MIN. COMP. ANTI-CYCLE TIMER |

**WARNING**

High Voltage: Disconnect all power before servicing or installing this unit. Multiple power sources may be present. Failure to do so may cause property damage, personal injury, or death.

Wiring is subject to change. Always refer to the wiring diagram or the unit for the most up-to-date wiring.

# WIRING DIAGRAM —CPG036/480454B —CPG072*4B/7B (460V/ 575V BELT DRIVE)

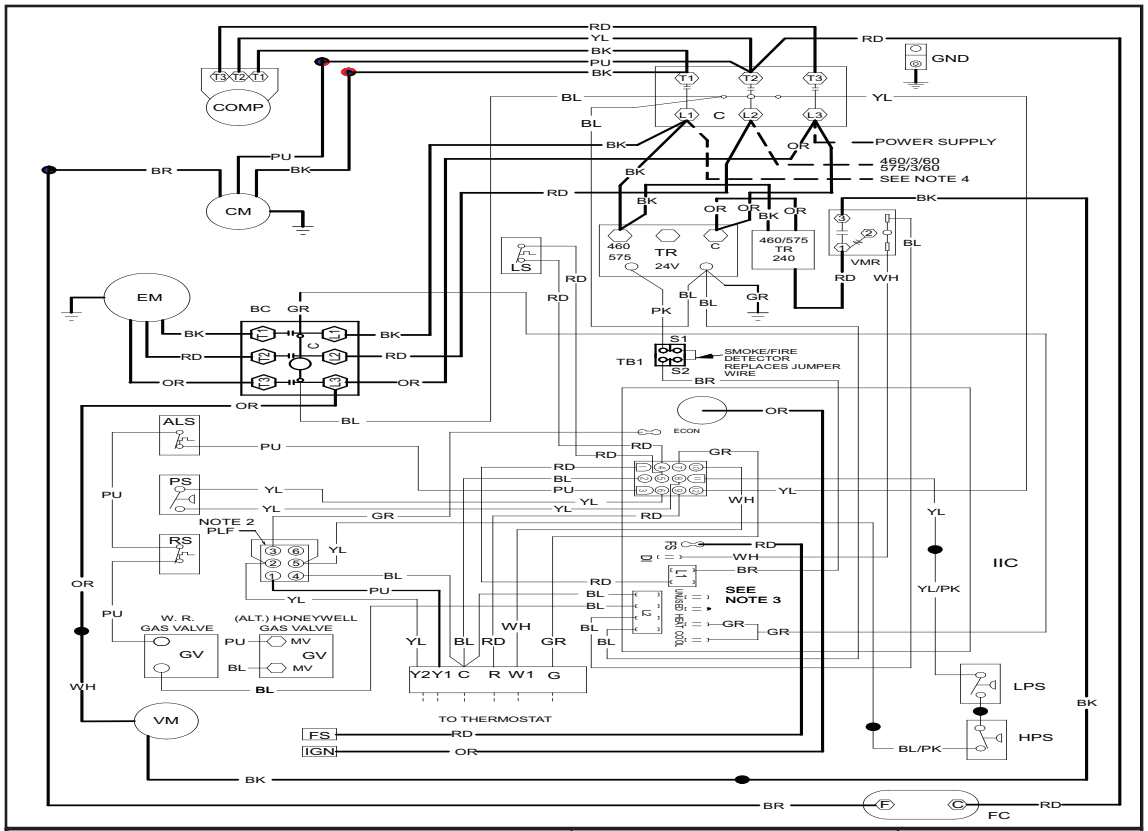


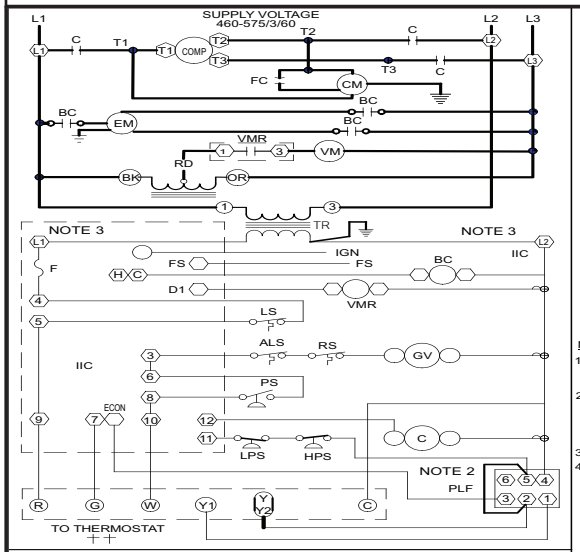


## INSTALLER/SERVICEMAN

THE STATUS LIGHT ON THE FURNACE CONTROL MAY BE USED AS A GUIDE TO TROUBLESHOOTING THIS APPLIANCE. STATUS LIGHT CODES ARE AS FOLLOWS:

| STATUS LIGHT | EQUIP. STATUS | CHECK |
|---|---|---|
| ON | NORMAL OPERATION | - |
| OFF | NO POWER OR INTERNAL CONTROL | CHECK INPUT POWER<br>CHECK FUSE ON CONTROL<br>REPLACE CONTROL |
| 1 BLINK | IGNITION FAILURE<br>OPEN ROLLOUT SWITCH<br>OPEN AUX. LIMIT SWITCH | GAS FLOW<br>GAS PRESSURE<br>GAS VALVE<br>FLAME SENSOR<br>FLAME ROLLOUT<br>BAD SWITCH<br>AUX. LIMIT OPEN |
| 2 BLINKS | PRESSURE SWITCH OPEN | CHECK PRESSURE SWITCH |
| 3 BLINKS | PRESSURE SWITCH CLOSED WITHOUT INDUCER ON | CHECK PRESSURE SWITCH |
| 4 BLINKS | OPEN LIMIT SWITCH | MAIN LIMIT OPEN<br>BAD SWITCH |
| 5 BLINKS | FALSE FLAME SENSED | STICKING GAS VALVE |
| 6 BLINKS | COMPRESSOR OUTPUT DELAY | 3 MIN. COMP. ANTI-CYCLE TIMER |

COMPONENT LEGEND

| | |
|---|---|
| ALS | AUXILLARY LIMIT SWITCH |
| BC | BLOWER CONTACTOR |
| COMP | COMPRESSOR |
| CM | CONDENSER MOTOR |
| C | CONTACTOR |
| EM | EVAPORATOR MOTOR |
| F | FUSE |
| FC | FAN CAPACITOR |
| FS | FLAME SENSOR |
| GND | EQUIPMENT GROUND |
| GV | GAS VALVE |
| HPS | HIGH PRESSURE SWITCH |
| IBR | INDOOR BLOWER RELAY |
| IIC | INTEGRATED IGNITION CONTROL |
| IGN | IGNITOR |
| LPS | LOW PRESSURE SWITCH |
| LS | LIMIT SWITCH |
| PLF | FEMALE PLUG/CONNECTOR |
| PS | PRESSURE SWITCH |
| RS | ROLLOUT SWITCH |
| TB1 | TERMINAL BLOCK (24V SIGNAL) |
| TR | TRANSFORMER |
| VM | VENT MOTOR |
| VMR | VENT MOTOR RELAY |

NOTES

1. REPLACEMENT WIRE MUST BE THE SAME SIZE AND TYPE OF INSULATION AS ORIGINAL. (USE COPPER CONDUCTOR ONLY).
2. ACCESSORY ECONOMIZER PLUG ADJACENT TO BLOWER HOUSING IN RETURN AIR COMPARTMENT. REMOVE MALE PLUG AND ATTACH FEMALE PLUG TO THE ECONOMIZER ACCESSORY.
3. L1 AND L2 ON IIC CONTROL IS 24V INPUT.
4. USE COPPER CONDUCTORS ONLY.

++ USE NEC CLASS 2 WIRE.

SEE UNIT RATING PLATE FOR TYPE AND SIZE OF OVER CURRENT PROTECTION.

460-575/3/60 0140L00871 REV B

FACTORY WIRING
- LINE VOLTAGE
- LOW VOLTAGE
- OPTIONAL HIGH VOLTAGE

FIELD WIRING
- HIGH VOLTAGE
- LOW VOLTAGE

WIRE CODE

| | |
|---|---|
| BK | BLACK |
| BL | BLUE |
| BR | BROWN |
| GR | GREEN |
| OR | ORANGE |
| PK | PINK |
| PU | PURPLE |
| RD | RED |
| WH | WHITE |
| YL | YELLOW |
| BL/PK | BLUE WITH PINK STRIP |
| YL/PK | YELLOW WITH PINK STRIP |

THERMOSTAT FIELD WIRING ++

NO ECONOMIZER

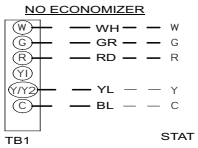


WITH ECONOMIZER OPTION

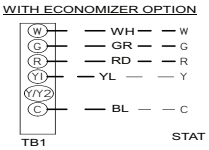


2 STAGE COOLING

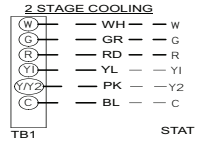


**High Voltage:** Disconnect all power before servicing or installing this unit. Multiple power sources may be present. Failure to do so may cause property damage, personal injury, or death.

**WARNING**

Wiring is subject to change. Always refer to the wiring diagram or the unit for the most up-to-date wiring.

# WIRING DIAGRAM — CPG036/480453B (THREE-PHASE, BELT DRIVE)

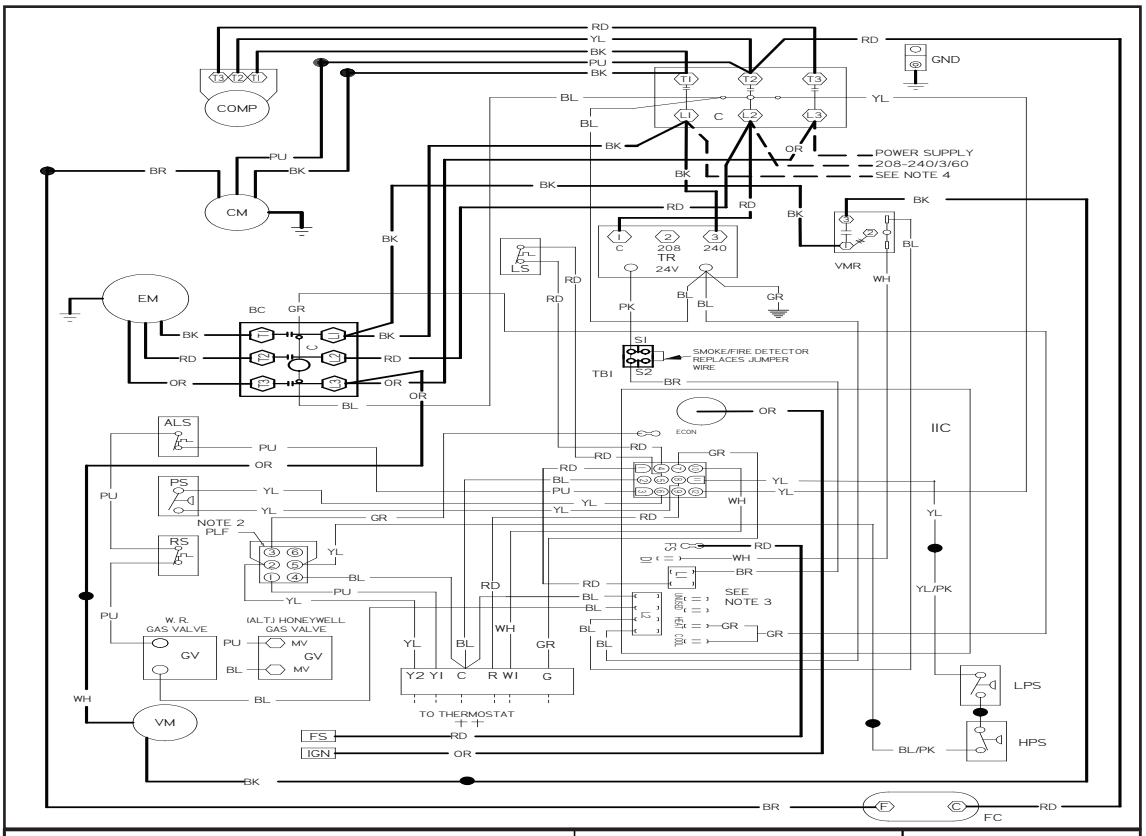


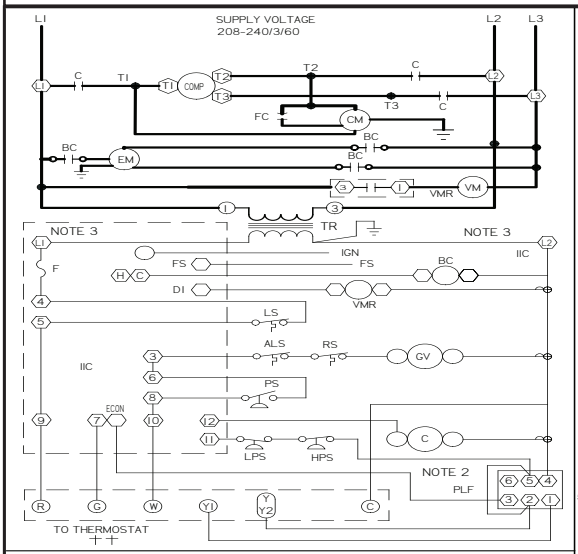


INSTALLER/SERVICEMAN

THE STATUS LIGHT ON THE FURNACE CONTROL MAY BE USED AS A GUIDE TO TROUBLESHOOTING THIS APPLIANCE. STATUS LIGHT CODES ARE AS FOLLOWS.

| STATUS LIGHT | EQUIP. STATUS | CHECK |
|---|---|---|
| ON | NORMAL OPERATION | - |
| OFF | NO POWER OR INTERNAL CONTROL | CHECK INPUT POWER<br>CHECK FUSE ON CONTROL<br>REPLACE CONTROL |
| 1 BLINK | IGNITION FAILURE<br>OPEN ROLLOUT SWITCH<br>OPEN AUX. LIMIT SWITCH | GAS FLOW<br>GAS PRESSURE<br>GAS VALVE<br>FLAME SENSOR<br>FLAME ROLLOUT<br>BAD SWITCH<br>AUX. LIMIT OPEN |
| 2 BLINKS | PRESSURE SWITCH OPEN | CHECK PRESSURE SWITCH |
| 3 BLINKS | PRESSURE SWITCH CLOSED WITHOUT INDUCER ON | CHECK PRESSURE SWITCH |
| 4 BLINKS | OPEN LIMIT SWITCH | MAIN LIMIT OPEN<br>BAD SWITCH |
| 5 BLINKS | FALSE FLAME SENSED | STICKING GAS VALVE |
| 6 BLINKS | COMPRESSOR OUTPUT DELAY | 3 MIN. COMP. ANTI-CYCLE TIMER |

COMPONENT LEGEND

| | |
|---|---|
| ALS | AUXILIARY LIMIT SWITCH |
| BC | BLOWER CONTACTOR |
| COMP | COMPRESSOR |
| CM | CONDENSER MOTOR |
| C | CONTACTOR |
| EM | EVAPORATOR MOTOR |
| F | FUSE |
| FC | FAN CAPACITOR |
| FS | FLAME SENSOR |
| GND | EQUIPMENT GROUND |
| GV | GAS VALVE |
| HPS | HIGH PRESSURE SWITCH |
| IBR | INDOOR BLOWER RELAY |
| IIC | INTEGRATED IGNITION CONTROL |
| IGN | IGNITOR |
| LPS | LOW PRESSURE SWITCH |
| LS | LIMIT SWITCH |
| PLF | FEMALE PLUG/CONNECTOR |
| PS | PRESSURE SWITCH |
| RS | ROLLOUT SWITCH |
| TBI | TERMINAL BLOCK (24V SIGNAL) |
| TR | TRANSFORMER |
| VM | VENT MOTOR |
| VMR | VENT MOTOR RELAY |

NOTES

1. REPLACEMENT WIRE MUST BE THE SAME SIZE AND TYPE OF INSULATION AS ORIGINAL. (USE COPPER CONDUCTOR ONLY).
2. ACCESSORY ECONOMIZER PLUG ADJACENT TO BLOWER HOUSING IN RETURN AIR COMPARTMENT. REMOVE MALE PLUG AND ATTACH FEMALE PLUG TO THE ECONOMIZER ACCESSORY.
3. L1 AND L2 ON IIC CONTROL IS 24V INPUT.
4. **USE COPPER CONDUCTORS ONLY.**
   ++ USE NEC CLASS 2 WIRE.
5. FOR 208 VOLT TRANSFORMER OPERATION, MOVE BLACK WIRE FROM TERMINAL (3) TO TERMINAL (2) ON TRANSFORMER.

SEE UNIT RATING PLATE FOR TYPE AND SIZE OF OVER CURRENT PROTECTION

208-240/3/60 0140L00979 REV B

FACTORY WIRING
- LINE VOLTAGE
- LOW VOLTAGE
- OPTIONAL HIGH VOLTAGE

FIELD WIRING
- HIGH VOLTAGE
- LOW VOLTAGE

WIRE CODE

| | |
|---|---|
| BK | BLACK |
| BL | BLUE |
| BR | BROWN |
| GR | GREEN |
| OR | ORANGE |
| PK | PINK |
| PU | PURPLE |
| RD | RED |
| WH | WHITE |
| YL | YELLOW |
| BL/PK | BLUE WITH PINK STRIP |
| YL/PK | YELLOW WITH PINK STRIP |

THERMOSTAT FIELD WIRING ++

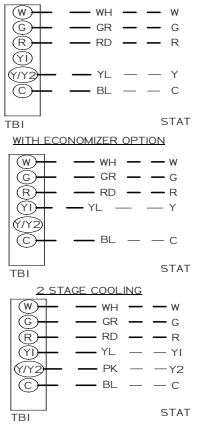


**WARNING** High Voltage: Disconnect all power before servicing or installing this unit. Multiple power sources may be present. Failure to do so may cause property damage, personal injury, or death.

Wiring is subject to change. Always refer to the wiring diagram or the unit for the most up-to-date wiring.

# Accessories

| Item # | Description | Fits Model Sizes |
|---|---|---|
| 14CURB3672B | Roof Curb – 14" Tall | 3-6 tons |
| 25FD3672 | 25% Manual Fresh Air Damper | 3-6 tons |
| 25MFD3672 | 25% Motorized Fresh Air Damper | 3-6 tons |
| BRD3672 | Horizontal Barometric Relief Damper | 3-6 tons |
| CDK36 | Concentric Duct Kit | 3 tons |
| CDK4872 | Concentric Duct Kit | 4-6 tons |
| DNECONGS3672B | Downflow Economizer | 3-6 tons |
| DNECONGS3672B-NR | Downflow Economizer w/o Barometric Relief | 3-6 tons |
| DNSQRRND36B | Downflow Square-to-Round Adapter 16" Round | 3 tons |
| DNSQRRND4872B | Downflow Square-to-Round Adapter 18" Round | 4-6 tons |
| DNBBS3672B | Burglar Bar Sleeves Includes Supply & Return | 3-6 tons |
| GHRC-1 | Hurricane Restraint Clip | All Models |
| HAILGD03 | Condenser Coil Hail Guard | 3-5 tons |
| HAILGD04 | Condenser Coil Hail Guard | 6 tons |
| HA-02 | High-Altitude Kit | All Models |
| HSKT036B / 048B /0 60B | High-Static Kits (230/460v) | 3-5 tons |
| HSKT072B | High-Static Kit (230/460v) | 6 tons |
| HZECONGS3672B | Horizontal Economizer | 3-6 tons |
| LAKT01 | Low-Ambient Kit | 3-6 tons |
| LPM-05 | LP Conversion Kit | 3-6 tons |
| LPT-00A | LP Conversion Kit for CPG036045 only | 3 tons |
| PE36722B | Power Exhaust 208/230v CPX Unit | 3-6 tons |
| PE36724B | Power Exhaust 460v CPX Unit | 3-6 tons |

# Notes

Goodman Manufacturing Company, L.P., reserves the right to discontinue, or change at any time, specifications or designs without notice or without incurring obligations. © 2011 • Goodman Manufacturing Company, L.P. • Houston, Texas • Printed in the USA.