Goodman®
Air Conditioning & Heating

CPG Commercial

3- to 6-Ton Packaged Gas/Electric Units

13 SEER / 11.3 EER

80% AFUE

Cooling Capacity:
35,000 — 71,000 BTU/h

Heating Capacity:
56,000 — 112,000 BTU/h

R-410A REFRIGERANT

Standard Features

- R-410A chlorine-free refrigerant
- TuffTube™ tubular heat exchanger
- High-efficiency scroll compressor
- HIgh- and low-pressure switches
- Copper tube / aluminum fin coils
- Contactor with lugs
- High-capacity, steel-cased filter dryer
- 24-volt terminal strip
- Convertible
- Easy to service
- Built-in filter rack with standard 2” filters
- Bottom utility entry
- Complies with California NOx emissions standards
- AHRI Certified; ETL Listed

Cabinet Features

- Heavy-gauge, galvanized-steel cabinet with UV-resistant powder-paint finish
- Full Perimeter Rail

Contents

Nomenclature 2
Product Specifications 3
Airflow Data 10
Expanded Cooling Data 17
Dimensions 25
Wiring Diagrams 29
Accessories 39

20 YEAR HEAT EXCHANGER LIMITED WARRANTY* | 5 YEAR PARTS LIMITED WARRANTY* | AHRI CERTIFIED | AHRI CERTIFIED | INTERTEK ETL LISTED US

* Complete warranty details available from your local dealer or at www.goodmanmfg.com.

DARE TO COMPARE

Nomenclature

C	P	G	036	045	3	B	X	X	X
1	2	3	4,5,6	7,8,9	10	11	12	13	14

Brand

C	Commercial

Configuration

P	Packaged Unit

Application

C	Cooling
G	Gas Heat
H	Heat Pump

Nominal Gross Cooling Capacity

036	3 Tons	102	8½ Tons
048	4 Tons	120	10 Tons
060	5 Tons	150	12½ tons
072	6 Tons	180	15 Tons
090	7½ Tons	240	20 Tons

Nominal Heating Capacity

CPG		CPC/CPH (Factory-Installed Electric Heat)			
045	45,000 BTU/h	XXX	No Heat		
090	90,000 BTU/h	010	10 kW	030	30 kW
115	115,000 BTU/h	015	15 kW	031	30 kW
140	140,000 BTU/h	016	15 kW	045	45 kW
210	210,000 BTU/h	018	18 kW	046	45 kW
350	350,000 BTU/h	020	20 kW	060	60 kW
400	400,000 BTU/h	025	25 kW	075	75 kW

Voltage

1	208V 1-Phase	4	460V 3-Phase
2	220/240V 1-Phase 50 Hz	5	380/415V 3-Phase 50 Hz
3	208/230V 3-Phase	7	575V 3-Phase

Factory-Installed Options

X	No Options
A	Non-powered convenience outlet
B	Powered convenience outlet
C	Low-ambient kit
F	Non-powered convenience outlet; Low-ambient kit
M	Powered convenience outlet; Low-ambient kit

Factory-Installed Options

X	Standard Aluminized Heat Exchanger
A	Condenser Coil Hail Guard
B	Condenser Coil Hail Guard Treated Condenser Coil (UltraGold)
C	Condenser Coil Hail Guard Stainless Steel Heat Exchanger
D	Condenser Coil Hail Guard Treated Condenser Coil (UltraGold) Stainless-Steel Heat Exchanger
J	Treated Condenser Coil (UltraGold)
S	Stainless-Steel Heat Exchanger
T	Treated Condenser Coil (UltraGold) Stainless-Steel Heat Exchanger

Factory-Installed Options

X	No Options
A	Downflow Economizer

Supply Fan/Drive Type/Motors

B	Belt Drive
D	Direct Drive
H	High-Static Belt Drive (Factory-Installed)

Factory-Installed Options

- Condenser Hail Guards: Louvered metal guards help protect the condenser coil from damage from hail and debris. Available as a factory-installed option on 3- to 12½-ton units. Hail guards are standard on 15- and 20-ton units.
- Stainless-Steel Heat Exchanger (CPG units only): A tubular heat exchanger made of 409-type stainless steel is installed in the unit.
- Ultra-Gold Condenser Coil: Offers increased corrosion resistance of the condenser coil.
- Low-Ambient Kit: Allows for cooling operation at lower outdoor temperatures. On the 3- to 6-ton units, cooling operation is extended from 60°F ambient temperature to 35°F outside air temperature. On 7½- to 20-ton units, cooling operation is extended from 35°F ambient temperature to 0°F outside air temperature.
- Economizers (Downflow): Based on air conditions, can provide outside air to cool the space.
- High Static Kits: Provides airflow in higher static applications.
- Electric Heat Kits (CPC and CPH units only): Available in all voltage options.
- Non-powered Convenience Outlet: A 120V, 15A, GFCI outlet makes it easier for technicians to service the unit once an electrician runs power to the outlet.
- Powered Convenience Outlet: A 120V, 15A, GFCI outlet powered with a transformer built into the unit.

Product Specifications — CPG036 B Models

	CPG036 0451DXXX	CPG036 0453DXXX	CPG036 0453BXXX	CPG036 0454BXXX
Cooling Capacity				
Total BTU/h	34,600	34,600	34,600	34,600
Sensible BTU/h	25,600	25,600	25,600	25,600
SEER / EER	13 / 11.3	13 / 11.3	13 / 11.3	13 / 11.3
Decibels	78	78	78	78
AHRI Reference #s	4385059	4385060	4385060	4385061
Heating Capacity				
High Input / Output kBTU/h	46 / 36.8	46 / 36.8	46 / 36.8	46 / 36.8
Steady State Efficiency (AFUE)	80	80	80	80
Temperature Rise Range (°F)	25-55	25-55	25-55	25-55
No. of Burners	2	2	2	2
Evaporator Motor / Coil				
Motor Type	Direct Drive	Direct Drive	Belt Drive	Belt Drive
# of Wheels (D x W)	1 (10” x 9”)	1 (10” x 9”)	1 (11” x 10”)	1 (11” x 10”)
Indoor Nominal CFM	1,200	1,200	1,200	1,200
Motor Speed Tap (Cooling)	Low Speed	Low Speed	---	---
Indoor Motor FLA (Cooling)	2.50	2.50	3.8	1.9
Horsepower - RPM	⅓ - 890	⅓ - 890	1.0 - 1725	1.0 - 1725
Piston Size (Cooling)	0.072	0.072	0.072	0.072
Filter Size (“)	(1) 24 x 24 x 2	(1) 24 x 24 x 2	(1) 24 x 24 x 2	(1) 24 x 24 x 2
Drain Size (NPT)	¾”	¾”	¾”	¾”
R-410A Refrigerant Charge Cir #1(oz.)	83	83	83	83
Evaporator Coil Face Area (ft^2)	5.4	5.4	5.4	5.4
Rows Deep/ Fins per Inch	3/16	3/16	3/16	3/16
Belt Drive Evap Fan Data				
# of Wheels (D x W)	---	---	1 (11” x 10”)	1 (11” x 10”)
Motor Sheave / Blower Sheave	---	---	1VL40 X ⅝ / AK69 X 1	
Belt	---	---	AX55	AX55
Condenser Fan / Coil				
Quantity of Condenser Fan Motors	1	1	1	1
Horsepower - RPM	¼ / 1,090	¼ / 1,090	¼ / 1,090	¼ - 890
Fan Diameter/ # Fan Blades	22/4	22/4	22/4	22/4
Outdoor Nominal CFM	3,800	3,800	3,800	3,800
Face Area (ft^2)	17.0	17.0	17.0	17.0
Rows Deep/ Fins per Inch	1 / 24	1 / 24	1 / 24	1 / 24
Compressor				
Quantity / Stage	1 / Single	1 / Single	1 / Single	1 / Single
Type	Scroll	Scroll	Scroll	Scroll
Compressor RLA / LRA	16.7 / 79.0	10.4 / 73.0	10.4 / 73.0	5.8 / 38.0
Electrical Data				
Voltage-Phase-Frequency	208/230-1-60	208/230-3-60	208/230-3-60	460-3-60
Indoor Blower HP / FLA	⅓ / 2.5	⅓ / 2.5	1 / 3.8	1 / 1.9
Outdoor Fan HP / FLA	¼ / 1.4	¼ / 1.4	¼ / 1.4	¼ / 0.8
Total Unit Amps	20.57	14.35	15.65	8.47
Min. Circuit Ampacity[1]	25	17	18	10
Max. Overcurrent Protection (amps)[2]	40	25	25	15
Power Supply Conduit Hole / Knockout	1.125	1.125	1.125	1.125
Low-Voltage Conduit Hole	½”	½”	½”	½”
Operating Weight (lbs)	525	525	525	525
Ship Weight (lbs)	550	550	550	550

[1] Wire size should be determined in accordance with National Electrical Codes. Extensive wire runs will require larger wire sizes.
[2] May use fuses or HACR-type circuit breakers of the same size as noted.
Note: Always check the S&R plate for electrical data on the unit being installed.

Product Specifications — CPG036 B Models (cont.)

	CPG036 0901DXXX	CPG036 0903DXXX	CPG036 0903BXXX	CPG036 0904BXXX	CPG036 0907BXXX
Cooling Capacity					
Total BTU/h	34,600	34,600	34,600	34,600	35,000
Sensible BTU/h	25,600	25,600	25,600	25,600	25,900
SEER / EER	13 / 11.3	13 / 11.3	13 / 11.3	13 / 11.3	13 / 11.3
Decibels	78	78	78	78	78
AHRI #s	4385059	4385060	4385060	4385061	4397607
Heating Capacity					
High Input / Output BTU/h	92 / 74	92 / 74	92 / 74	92 / 74	92 / 74
Low. Input / Output kBTU/h	69 / 55	69 / 55	69 / 55	69 / 55	69 / 55
Steady State Efficiency (AFUE)	80	80	80	80	80
Temperature Rise Range (°F) Hi / Low	40-70 / 30-60	40-70 / 30-60	40-70 / 30-60	40-70 / 30-60	40-70 / 30-60
No. of Burners	4	4	4	4	3
Evaporator Motor / Coil					
Motor Type	Direct Drive	Direct Drive	Belt Drive	Belt Drive	Belt Drive
# of Wheels (D x W)	1 (10” x 9”)	1 (10” x 9”)	1 (11” x 10”)	1 (11” x 10”)	1 (11” x 10”)
Indoor Nominal CFM	1,200	1,200	1,200	1,200	1,200
Motor Speed Tap (Cooling)	Low Speed	Low Speed	---	---	---
Indoor Motor FLA (Cooling)	2.50	2.50	3.8	1.9	1.9
Horsepower - RPM	⅓ - 890	⅓ - 890	1.0 - 1,725	1.0 - 1,725	1.0 - 1,725
Piston Size (Cooling)	0.068	0.068	0.068	0.068	0.068
Filter Size (“)	(1) 24 x 24 x 2	(1) 24 x 24 x 2	(1) 24 x 24 x 2	(1) 24 x 24 x 2	(1) 24 x 24 x 2
Drain Size (NPT)	¾”	¾”	¾”	¾”	¾”
R-410A Refrigerant Charge Cir #1(oz.)	90	83	83	90	90
Evaporator Coil Face Area (ft²)	5.4	5.4	5.4	5.4	5.4
Rows Deep / Fins per Inch	3 / 16	3 / 16	3 / 16	3 / 16	3 / 16
Belt Drive Evap Fan Data					
# of Wheels (D x W)	---	---	1 (11” x 10”)	1 (11” x 10”)	1 (11” x 10”)
Motor Sheave / Blower Sheave	---	---	1VL40 X ⅝ / AK69 X 1		
Belt	---	---	AX55	AX55	AX55
Condenser Fan / Coil					
Quantity of Condenser Fan Motors	1	1	1	1	1
Horsepower - RPM	¼ / 1,090	¼ / 1,090	¼ / 1,090	¼ - 890	¼ - 1,075
Fan Diameter/ # Fan Blades	22 / 4	22 / 4	22 / 4	22 / 4	22 / 4
Outdoor Nominal CFM	3,800	3,800	3,800	3,800	3,800
Face Area (ft²)	18.0	18.0	18	18	13
Rows Deep/ Fins per Inch	1 / 22	1 / 22	1 / 22	1 / 22	2 / 16
Compressor					
Quantity / Stage	1 / Single	1 / Single	1 / Single	1 / Single	1 / Single
Type	Scroll	Scroll	Scroll	Scroll	Scroll
Compressor RLA / LRA	16.7 / 79.0	10.4 / 73.0	10.4 / 73.0	5.8 / 38.0	3.8 / 36.5
Electrical Data					
Voltage-Phase-Frequency	208/230-1-60	208/230-3-60	208/230-3-60	460-3-60	575-3-60
Indoor Blower HP / FLA	⅓ / 2.5	⅓ / 2.5	1 / 3.8	1 / 1.9	1 / 1.9
Outdoor Fan HP / FLA	¼ / 1.4	¼ / 1.4	¼ / 1.4	¼ / 0.8	¼ / 0.8
Total Unit Amps	20.57	14.35	15.65	8.47	6.68
Min. Circuit Ampacity[1]	25	17	18	10	8
Max. Overcurrent Protection (amps)[2]	40	25	25	15	15
Power Supply Conduit Hole	1.125	1.125	1.125	1.125	1.125
Low-Voltage Conduit Hole	½”	½”	½”	½”	½”
Operating Weight (lbs)	535	535	535	535	535
Ship Weight (lbs)	560	560	560	560	560

[1] Wire size should be determined in accordance with National Electrical Codes. Extensive wire runs will require larger wire sizes.
[2] May use fuses or HACR-type circuit breakers of the same size as noted.
Note: Always check the S&R plate for electrical data on the unit being installed.

Product Specifications — CPG048 B Models

	CPG048 0901DXXX	CPG048 0903DXXX	CPG048 0903BXXX	CPG048 0904BXXX
Cooling Capacity				
Total BTU/h	45,500	45,500	45,500	45,500
Sensible BTU/h	35,000	35,000	35,000	35,000
SEER / EER	13.0 / 11.3	13.0 / 11.3	13.0 / 11.3	13.0 / 11.3
Decibels	78	78	78	78
AHRI Reference #s	4385062	4385063	4385063	4385064
Heating Capacity				
High Input /Output kBTU/h	92 / 74	92 / 74	92 / 74	92 / 74
Low Input /Output kBTU/h	69 / 55	69 / 55	69 / 55	69 / 55
Steady State Efficiency (AFUE)	80	80	80	80
Temperature Rise Range (°F) Hi / Low	30-60 / 15-45	30-60 / 15-45	30-60 / 15-45	30-60 / 15-45
No. of Burners	4	4	4	4
Evaporator Motor / Coil				
Motor Type	Direct Drive	Direct Drive	Belt Drive	Belt Drive
Indoor Nominal CFM	1,600	1,600	1,600	1,600
Motor Speed Tap (Cooling)	Medium	Medium	---	---
Indoor Motor FLA (Cooling)	2.87	2.87	3.8	1.9
Horsepower - RPM	½ - 1,000	½ - 1,000	1.0 / 1,725	1.0 / 1,725
Piston Size (Cooling)	0.076	0.076	0.076	0.076
Filter Size (#)	14 x 20 x 2 (4)	14 x 20 x 2 (4)	14 x 20 x 2 (4)	14 x 20 x 2 (4)
Drain Size (NPT)	¾"	¾"	¾"	¾"
R-410A Refrigerant Charge (oz.)	103	103	105	103
Evaporator Coil Face Area (ft^2)	7.0	7.0	7.0	7.0
Rows Deep / Fins per Inch	4 / 16	4 / 16	4 / 16	4 / 16
Belt Drive Evap Fan Data				
# of Wheels (D" x W")	---	---	(1) 11 x 10	(1) 11 x 10
Motor Sheave / Blower Sheave	---	---	VL44 X ⅝ / AK66 X 1	
Belt	---	---	AX55	AX55
Condenser Fan / Coil				
Quantity of Condenser Fan Motors	1	1	1	1
Horsepower - RPM	¼ - 1,090	¼ - 1,090	¼ - 1,090	¼ - 890
Fan Diameter / # Fan Blades	22 / 4	22 / 4	22 / 4	22 / 4
Outdoor Nominal CFM	3,800	3,800	3,800	3,800
Face Area (ft^2)	17.0	17.0	17.0	17.0
Rows Deep / Fins per Inch	1 / 24	1 / 24	1 / 24	1 / 24
Compressor				
Quantity / Stage	1 / Single	1 / Single	1 / Single	1 / Single
Type	Scroll	Scroll	Scroll	Scroll
Compressor RLA / LRA	19.9 / 109	13.1 / 83.1	13.1 / 83.1	6.1 / 41
Electrical Data				
Voltage-Phase-Frequency	208/230-1-60	208/230-3-60	208/230-3-60	460-3-60
Outdoor Fan FLA	1.40	1.40	1.40	0.80
Total Unit Amps	24.1	17.4	18.3	8.8
Min. Circuit Ampacity[1]	29	21	22	10
Max. Overcurrent Protection (amps)[2]	45	30	30	15
Power Supply Conduit Hole	1.125	1.125	1.125	1.125
Low-Voltage Conduit Hole	½"	½"	½"	½"
Operating Weight (lbs)	575	575	575	575
Ship Weight (lbs)	600	600	600	600

[1] Wire size should be determined in accordance with National Electrical Codes. Extensive wire runs will require larger wire sizes.
[2] May use fuses or HACR-type circuit breakers of the same size as noted.
Note: Always check the S&R plate for electrical data on the unit being installed.

Product Specifications — CPG048 B Models (cont.)

	CPG048 1151DXXX	CPG048 1153DXXX	CPG048 1153BXXX	CPG048 1154BXXX	CPG048 1157BXXX
Cooling Capacity					
Total BTU/h	45,500	45,500	45,500	45,500	45,500
Sensible BTU/h	35,000	35,000	35,000	35,000	35,000
SEER / EER	13.0 / 11.3	13.0 / 11.3	13.0 / 11.3	13.0 / 11.3	13.0 / 11.3
Decibels	78	78	78	78	78
AHRI Reference #s	4385062	4385063	4385063	4385064	4397608
Heating Capacity					
High Input /Output kBTU/h	115 / 92	115 / 92	115 / 92	115 / 92	115 / 92
Low Input /Output kBTU/h	86.25 / 69	86.25 / 69	86.25 / 69	86.25 / 69	86.25 / 69
Steady State Efficiency (AFUE)	80	80	80	80	80
Temperature Rise Range (°F) Hi / Low	40-70 / 25-55	40-70 / 25-55	40-70 / 25-55	40-70 / 25-55	40-70 / 25-55
No. of Burners	5	5	5	5	5
Evaporator Motor / Coil					
Motor Type	Direct Drive	Direct Drive	Belt Drive	Belt Drive	Belt Drive
Indoor Nominal CFM	1,600	1,600	1,600	1,600	1,600
Motor Speed Tap (Cooling)	Medium	Medium	--	--	--
Indoor Motor FLA (Cooling)	2.87	2.87	3.8	1.9	2.3
Horsepower - RPM	½ - 1,000	½ - 1,000	1.0 / 1,725	1.0 / 1,725	1½ / 1,725
Piston Size (Cooling)	0.076	0.076	0.076	0.076	0.076
Filter Size (#)	14 x 20 x 2 (4)	14 x 20 x 2 (4)	14 x 20 x 2 (4)	14 x 20 x 2 (4)	14 x 20 x 2 (4)
Drain Size (NPT)	¾"	¾"	¾"	¾"	¾"
R-410A Refrigerant Charge Cir #1(oz.)	103	103	103	103	105
Evaporator Coil Face Area (ft^2)	7.0	7.0	7.0	7.0	7.0
Rows Deep / Fins per Inch	4 / 16	4 / 16	4 / 16	4 / 16	4 / 16
Belt Drive Evap Fan Data					
# of Wheels (D" x W")	---	---	(1) 11 x 10	(1) 11 x 10	(1) 11 x 10
Motor Sheave / Blower Sheave	---	---	VL44 X ⅝ / AK66 X 1		
Belt	---	---	AX55	AX55	AX55
Condenser Fan / Coil					
Quantity of Condenser Fan Motors	1	1	1	1	1
Horsepower - RPM	¼ - 1,090	¼ - 1,090	¼ - 1,090	¼ - 890	¼ - 1,075
Fan Diameter / # Fan Blades	22 / 4	22 / 4	22 / 4	22 / 4	22 / 4
Outdoor Nominal CFM	3,800	3,800	3,800	3,800	3,800
Face Area (ft^2)	17.0	17.0	17.0	17.0	17.0
Rows Deep/ Fins per Inch	1 / 24	1 / 24	1 / 24	1 / 24	1 / 24
Compressor					
Quantity / Stage	1 / Single	1 / Single	1 / Single	1 / Single	1 / Single
Type	Scroll	Scroll	Scroll	Scroll	Scroll
Compressor RLA / LRA	19.9 / 109	13.1 / 83.1	13.1 / 83.1	6.1 / 41	4.4 / 33
Electrical Data					
Voltage-Phase-Frequency	208/230-1-60	208/230-3-60	208/230-3-60	460-3-60	575-3-60
Outdoor Fan FLA	1.40	1.40	1.40	0.80	0.60
Total Unit Amps	24.1	17.4	18.3	8.8	7.3
Min. Circuit Ampacity[1]	29	21	22	10	8
Max. Overcurrent Protection (amps)[2]	45	30	30	15	15
Power Supply Conduit Hole	1.125	1.125	1.125	1.125	1.125
Low-Voltage Conduit Hole	½"	½"	½"	½"	½"
Operating Weight (lbs)	580	580	580	580	580
Ship Weight (lbs)	605	605	605	605	605

[1] Wire size should be determined in accordance with National Electrical Codes. Extensive wire runs will require larger wire sizes.
[2] May use fuses or HACR-type circuit breakers of the same size as noted.
Note: Always check the S&R plate for electrical data on the unit being installed.

Product Specifications — CPG060 B Models

	CPG060 0901DXXX	CPG060 0903DXXX	CPG060 0903BXXX	CPG060 0904BXXX
Cooling Capacity				
Total BTU/h	59,500	59,500	59,500	59,500
Sensible BTU/h	43,200	43,200	43,200	43,200
SEER / EER	13 / 11.3	13 / 11.3	13 / 11.3	13 / 11.3
Decibels	78	78	78	78
ARI Reference Nos.	4385065	4385066	4385066	4385067
Gas Heating Capacity				
High Input /Output kBTU/h	92 / 74	92 / 74	92 / 74	92 / 74
Low Input /Output kBTU/h	69 / 55	69 / 55	69 / 55	69 / 55
Steady State Efficiency (AFUE)	80	80	80	80
Temperature Rise Range (°F)	20-50 / 15-45	20-50 / 15-45	20-50 / 15-45	20-50 / 15-45
No. of Burners	4	4	4	4
Evaporator Motor / Coil				
Motor Type	Direct	Direct	Belt	Belt
Indoor Nominal CFM	2,000	2,000	2,000	2,000
Piston Size (Cooling)	0.086	0.086	0.086	0.086
Filter Size (#)	14 x 20 x 2 (4)	14 x 20 x 2 (4)	14 x 20 x 2 (4)	14 x 20 x 2 (4)
Drain Size (NPT)	¾”	¾”	¾”	¾”
R-410A Refrigerant Charge (oz.)	162	162	162	165
Face Area (ft²)	7.8	7.8	7.8	7.8
Rows Deep/ Fins per Inch	4 / 16	4 / 16	4 / 16	4 / 16
Tube Diameter - Material	5/16 - Copper	5/16 - Copper	5/16 - Copper	5/16 - Copper
Belt Drive Evap Fan Data				
# of Wheels (D x W)	---	---	1 (11” x 10”)	1 (11” x 10”)
Motor Sheave / Blower Sheave	---	---	VL44 X ⅝ / AK61 X 1	
Belt	---	---	AX53	AX53
Condenser Fan / Coil				
Horsepower / RPM	¼ / 1,090	¼ / 1,090	¼ / 1,090	¼ / 1,090
Fan Diameter/ # Fan Blades	22 / 4	22 / 4	22 / 4	22 / 4
Outdoor Nominal CFM	3,800	3,800	3,800	3,800
Face Area (ft²)	17.0	17.0	17.0	17.0
Rows Deep/ Fins per Inch	2 / 18	2 / 18	2 / 18	2 / 18
Tube Diameter - Material	5/16 - Copper	5/16 - Copper	5/16 - Copper	5/16 - Copper
Compressor				
Quantity / Stage	1 / Single	1 / Single	1 / Single	1 / Single
Type	Scroll	Scroll	Scroll	Scroll
Compressor RLA / LRA	26.4 / 134	16 / 110	16 / 110	7.8 / 52
Electrical Data				
Voltage-Phase-Frequency	208/230-1-60	208/230-3-60	208/230-3-60	460-3-60
Indoor Blower HP / FLA)STD Static)	1.0 / 7.6	1.0 / 7.6	1.0 / 3.8	1.0 / 1.9
Indoor Blower LRA	----	----	24	13
Outdoor Fan HP / FLA	¼ / 1.40	¼ / 1.40	¼ / 1.40	¼ / 0.8
Min. Circuit Ampacity[1]	42	29	25	13
Max. Overcurrent Protection (amps)[2]	60	45	40	20
Power Supply Conduit Hole	1.125	1.125	1.125	1.125
Low-Voltage Conduit Hole	½”	½”	½”	½”
Operating Weight (lbs)	620	620	620	620
Ship Weight (lbs)	645	645	645	645

[1] Wire size should be determined in accordance with National Electrical Codes. Extensive wire runs will require larger wire sizes.
[2] May use fuses or HACR-type circuit breakers of the same size as noted.
Note: Always check the S&R plate for electrical data on the unit being installed.

Product Specifications — CPG060 B Models (cont.)

	CPG060 1401DXXX	CPG060 1403DXXX	CPG060 1403BXXX	CPG060 1404BXXX	CPG060 1407BXXX
Cooling Capacity					
Total BTU/h	59,500	59,500	59,500	59,500	59,500
Sensible BTU/h	43,200	43,200	43,200	43,200	43,200
SEER / EER	13 / 11.3	13 / 11.3	13 / 11.3	13 / 11.3	13 / 11.3
Decibels	78	78	78	78	78
AHRI Nos.	4385065	4385066	4385066	4385067	4397609
Gas Heating Capacity					
High Input / Output kBTU/h	138 / 110.4	138 / 110.4	138 / 110.4	138 / 110.4	138 / 110.4
Low. Input / Output kBTU/h	103 / 83	103 / 83	103 / 83	103 / 83	103 / 83
Steady State Efficiency (AFUE)	80	80	80	80	80
Temperature Rise Range (°F) Hi / Low	35-65 / 25-55	35-65 / 25-55	35-65 / 25-55	35-65 / 25-55	35-65 / 25-55
No. of Burners	6	6	6	6	6
Evaporator Motor / Coil					
Motor Type	Direct	Direct	Belt	Belt	Belt
Indoor Nominal CFM	2,000	2,000	2,000	2,000	2,000
Piston Size (Cooling)	0.086	0.086	0.086	0.086	0.086
Filter Size (#)	14 x 20 x 2 (4)	14 x 20 x 2 (4)	14 x 20 x 2 (4)	14 x 20 x 2 (4)	14 x 20 x 2 (4)
Drain Size (NPT)	¾”	¾”	¾”	¾”	¾"
R-410A Refrigerant Charge (oz.)	162	162	162	162	162
Face Area (ft²)	7.8	7.8	7.8	7.8	7.8
Rows Deep/ Fins per Inch	4 / 16	4 / 16	4 / 16	4 / 16	4 / 16
Tube Diameter - Material	5/16 - Copper	5/16 - Copper	5/16 - Copper	5/16 - Copper	5/16 - Copper
Belt Drive Evap Fan Data					
# of Wheels (D x W)	---	---	1 (11” x 10”)	1 (11” x 10”)	1 (11" x 10")
Motor Sheave / Blower Sheave	---	---	VL44 X ⅝ / AK61 X 1		
Belt	---	---	AX53	AX53	AX53
Condenser Fan / Coil					
Horsepower / RPM	¼ / 1,090	¼ / 1,090	¼ / 1,090	¼ / 1,090	¼ / 1,075
Fan Diameter/ # Fan Blades	22 / 4	22 / 4	22 / 4	22 / 4	22 / 1
Outdoor Nominal CFM	3,800	3,800	3,800	3,800	3,800
Face Area (ft²)	17.0	17.0	17.0	17.0	17½
Rows Deep/ Fins per Inch	2 / 18	2 / 18	2 / 18	2 / 18	2 / 18
Tube Diameter - Material	5/16 - Copper	5/16 - Copper	5/16 - Copper	5/16 - Copper	5/16 - Copper
Compressor					
Quantity / Stage	1 / Single	1 / Single	1 / Single	1 / Single	1 / Single
Type	Scroll	Scroll	Scroll	Scroll	Scroll
Compressor RLA / LRA	26.4 / 134	16 / 110	16 / 110	7.8 / 52	5.7 / 38.9
Electrical Data					
Voltage-Phase-Frequency	208/230-1-60	208/230-3-60	208/230-3-60	460-3-60	575-3-60
Indoor Blower HP / FLA (STD Static)	1.0 / 7.6	1.0 / 7.6	1.0 / 3.8	1.0 / 1.9	1.5 / 2.3
Indoor Blower LRA	----	----	24	13	12
Outdoor Fan HP / FLA	¼ / 1.40	¼ / 1.40	¼ / 1.40	¼ / 0.8	¼ / 0.6
Min. Circuit Ampacity[1]	42	29	25	12	10
Max. Overcurrent Protection (amps)[2]	60	40	40	20	15
Power Supply Conduit Hole	1.125	1.125	1.125	1.125	1.125
Low-Voltage Conduit Hole	½”	½”	½”	½”	½"
Operating Weight (lbs)	630	630	630	630	630
Ship Weight (lbs)	655	655	655	655	655

[1] Wire size should be determined in accordance with National Electrical Codes. Extensive wire runs will require larger wire sizes.
[2] May use fuses or HACR-type circuit breakers of the same size as noted.
Note: Always check the S&R plate for electrical data on the unit being installed.

Product Specifications — CPG072 B Models

	CPG072 1403BXXX	CPG072 1404BXXX	CPG072 1407BXXX
Cooling Capacity			
Total BTU/h	71,000	71,000	71,000
Sensible BTU/h	48,280	48,280	48,280
EER	11.1	11.1	11.1
Decibels	78.0	78.0	78.0
AHRI Number	3397632	3397632	3397632
Heating Capacity			
High Input / Output KBTU/h	138 / 110.4	138 / 110.4	138 / 110.4
Low Input/ Output KBTU/h	103 / 83	103 / 83	103 / 83
Steady State Efficiency	80	80	80
Temperature Rise Range (°F)	30-60 / 15-45	30-60 / 15-45	30-60 / 15-45
No. of Burners	6	6	6
Evaporator Motor / Coil			
Motor Type	Belt Drive	Belt Drive	Belt Drive
# of Wheels (D x W)	1 (11" x 10")	1 (11" x 10")	1 (11" x 10")
Indoor Nominal CFM	2,400	2,400	2,400
Indoor Motor FLA (Cooling)	5.0	2.5	2.3
Horsepower - RPM	1.5-1,725	1.5-1,725	1.5-1,725
Piston Size (Cooling)	0.094	0.094	t
Filter Size (Qty)	(4) 16" x 20" x 2"	(4) 16" x 20" x 2"	(4) 16" x 20" x 2"
Drain Size (NPT)	¾"	¾"	¾"
R-410A Refrigerant Charge (oz.)	213.0	213.0	213.0
Evaporator Coil Face Area (ft^2)	8.9	8.9	8.9
Rows Deep/ Fins per Inch	4/ 16	4/ 16	4/ 16
Motor Sheave	VL44 x 7/8	VL44 x 7/8	VL44 x 7/8
Blower Sheave / Belt	AK59x1 / AX53	AK59x1 / AX53	AK59x1 / AX53
Condenser Fan / Coil			
Quantity of Condenser Fan Motors	1	1	1
Horsepower - RPM	⅓ - 1,075	⅓ - 1,075	⅓ - 1,075
Fan Diameter/ # Fan Blades	22/ 4	22/ 4	22/ 4
Outdoor Nominal CFM	4,300	4,300	4,300
Face Area (ft^2)	18.7	18.7	18.7
Rows Deep/ Fins per Inch	2/ 20	2/ 20	2/ 20
Compressor			
Quantity / Stage	1 / Single	1 / Single	1 / Single
Type	Scroll	Scroll	Scroll
Compressor RLA / LRA	19/ 123	9.7/ 62	7.4/ 50
Electrical Data			
Voltage/ Phase/ Frequency	208-230/ 3/ 60	460/ 3/ 60	575/ 3/ 60
Belt-Driven Standard Max Static	1.0	1.0	1.0
Outdoor Fan FLA	1.90	1.20	0.90
Total Unit Amps	25.9	13.4	10.6
Min. Circuit Ampacity[1]	31	16	12
Max. Overcurrent Protection (amps)[2]	45	25	15
Entrance Power Supply	1.125"	1.125”	1.125”
Entrance Control Voltage	½"	½"	½"
Operating Weight (lbs)	690	690	690
Ship Weight (lbs)	715	715	715

[1] Wire size should be determined in accordance with National Electrical Codes. Extensive wire runs will require larger wire sizes.

[2] May use fuses or HACR-type circuit breakers of the same size as noted.

Note: Always check the S&R plate for electrical data on the unit being installed.

Airflow Data — CPG036B

Standard Direct Drive — Horizontal

CFM	Static	Amps	Watts	RPM	Speed Tap
1293	0.1	1.72	364	715	Low
1235	0.2	1.67	354	759	
1173	0.3	1.62	342	803	
1124	0.4	1.58	330	841	
1056	0.5	1.54	316	880	
978	0.6	1.47	298	913	
1500	0.1	2.13	462	808	Med
1434	0.2	2.10	448	838	
1381	0.3	2.04	436	869	
1318	0.4	2.00	424	902	
1238	0.5	1.94	406	929	
1163	0.6	1.88	392	951	
1055	0.7	1.80	370	990	
936	0.8	1.72	350	1017	
1441	0.4	2.35	504	940	High
1355	0.5	2.28	484	962	
1264	0.6	2.21	468	989	
1157	0.7	2.13	446	1012	
1027	0.8	2.03	418	1034	
840	0.9	1.90	388	1067	

Note: Assumes dry coil with filter in place; SCFM correction for wet coil = 4%

Standard Direct Drive — Down Shot

CFM	Static	Amps	Watts	RPM	Speed Tap
1313	0.10	1.68	356	748	Low
1247	0.20	1.63	344	786	
1178	0.30	1.59	334	832	
1094	0.40	1.55	324	869	
1002	0.50	1.50	312	913	
919	0.60	1.45	296	940	
1471	0.10	2.11	454	830	Med
1400	0.20	2.06	440	863	
1354	0.30	2.02	432	896	
1271	0.40	1.95	416	929	
1188	0.50	1.90	398	957	
1083	0.60	1.82	378	984	
955	0.70	1.74	356	1012	
1470	0.30	2.37	510	935	High
1390	0.40	2.31	492	957	
1310	0.50	2.25	476	978	
1206	0.60	2.17	454	1000	
1098	0.70	2.09	436	1023	
966	0.80	1.99	412	1045	

Airflow Data — CPG036B (cont.)

Standard Belt Drive — Horizontal

ESP (" H_2O)	Turns Open											
	0		1		2		3		4		5	
	CFM	BHP	CFM	BHP	CFM	BHP	CFM	BHP	CFM	BHP	CFM	BHP
0.2									1524	0.32	1340	0.25
0.4					1628	0.41	1396	0.32	1171	0.24	900	0.16
0.6			1541	0.43	1284	0.32	1024	0.23	714	0.14		
0.8	1444	0.45	1193	0.33	936	0.24						
1.0	1111	0.34	806	0.23								
1.2	744	0.22										

High-Static Belt Drive — Horizontal

ESP (" H_2O)	Turns Open											
	0		1		2		3		4		5	
	CFM	BHP	CFM	BHP	CFM	BHP	CFM	BHP	CFM	BHP	CFM	BHP
0.6									1568	0.45	1266	0.32
0.8							1492	0.47	1194	0.34	922	0.23
1.0					1476	0.52	1163	0.37	856	0.24		
1.2			1458	0.57	1146	0.41	802	0.25				
1.4	1458	0.63	1139	0.46	782	0.30						
1.6	1139	0.52	844	0.36								
1.8	844	0.42										

Standard Belt Drive — Down Shot

ESP (" H_2O)	Turns Open											
	0		1		2		3		4		5	
	CFM	BHP	CFM	BHP	CFM	BHP	CFM	BHP	CFM	BHP	CFM	BHP
0.2							1596	0.36	1368	0.28	1162	0.21
0.4					1468	0.37	1224	0.28	981	0.20		
0.6	1610	0.51	1383	0.39	1124	0.28	856	0.19				
0.8	1293	0.40	1021	0.29	776	0.20						
1.0	948	0.29	614	0.17								

High-Static Belt Drive — Down Shot

ESP (" H_2O)	Turns Open											
	0		1		2		3		4		5	
	CFM	BHP	CFM	BHP	CFM	BHP	CFM	BHP	CFM	BHP	CFM	BHP
0.6							1655	0.53	1389	0.39	1103	0.28
0.8					1640	0.57	1342	0.43	1035	0.29	775	0.19
1.0			1638	0.63	1326	0.47	1002	0.32	713	0.19		
1.2	1638	0.69	1307	0.52	984	0.36						
1.4	1307	0.58	1002	0.42								
1.6	1002	0.48	717	0.32								
1.8	717	0.38										

Note: Tables represent dry coil without filter; to compensate for filter, add 0.08" to measured E.S.P. SCFM correction for wet coil = 4%.

Airflow Data — CPG048B

Standard Direct Drive — Horizontal

CFM	Static	Amps	Watts	RPM	Speed Tap
1592	0.1	2.54	543	815	Low
1528	0.2	2.43	521	858	
1464	0.3	2.32	499	901	
1380	0.4	2.21	475	930	
1296	0.5	2.10	451	959	
1828	0.1	3.08	665	892	Med
1700	0.2	2.75	601	924	
1606	0.3	2.61	563	966	
1531	0.4	2.48	537	990	
1401	0.5	2.32	503	1023	
1287	0.6	2.22	477	1045	
1123	0.7	2.05	441	1073	
1926	0.1	3.34	740	937	High
1825	0.2	3.18	700	965	
1712	0.3	3.03	660	989	
1598	0.4	2.87	626	1015	
1482	0.5	2.76	596	1032	
1357	0.6	2.62	564	1049	

Note: Assumes dry coil with filter in place; SCFM correction for wet coil = 4%

Standard Direct Drive — Down Shot

CFM	Static	Amps	Watts	RPM	Speed Tap
1612	0.1	2.60	554	789	Low
1548	0.2	2.49	532	832	
1484	0.3	2.38	510	875	
1400	0.4	2.27	486	904	
1316	0.5	2.16	462	933	
1846	0.1	3.14	676	866	Med
1718	0.2	2.81	612	898	
1624	0.3	2.67	574	940	
1549	0.4	2.54	548	964	
1419	0.5	2.38	514	997	
1305	0.6	2.28	488	1019	
1141	0.7	2.11	452	1047	
1954	0.1	3.43	758	924	High
1853	0.2	3.27	718	952	
1740	0.3	3.12	678	976	
1626	0.4	2.96	644	1002	
1510	0.5	2.85	614	1019	
1385	0.6	2.71	582	1036	

Airflow Data — CPG048B (cont.)

Standard Belt Drive — Horizontal

ESP (" H_2O)	Turns Open											
	0		1		2		3		4		5	
	CFM	BHP	CFM	BHP	CFM	BHP	CFM	BHP	CFM	BHP	CFM	BHP
0.2									1800	0.47	1556	0.35
0.4					2002	0.65	1708	0.49	1438	0.36	1167	0.22
0.6			1910	0.67	1612	0.50	1330	0.37	1030	0.23		
0.8	1813	0.69	1571	0.54	1222	0.36	989	0.25				
1.0	1478	0.56	1142	0.32								
1.2	1107	0.41										

High-Static Belt Drive — Horizontal

ESP (" H_2O)	Turns Open											
	0		1		2		3		4		5	
	CFM	BHP	CFM	BHP	CFM	BHP	CFM	BHP	CFM	BHP	CFM	BHP
0.6									1894	0.66	1585	0.49
0.8							1839	0.71	1532	0.53	1223	0.37
1.0					1782	0.73	1477	0.55	1170	0.39		
1.2			1786	0.80	1445	0.59	1115	0.40				
1.4	1764	0.86	1426	0.64	1107	0.46						
1.6	1446	0.72	1098	0.50								
1.8	1099	0.56										

Standard Belt Drive — Down Shot

ESP (" H_2O)	Turns Open											
	0		1		2		3		4		5	
	CFM	BHP	CFM	BHP	CFM	BHP	CFM	BHP	CFM	BHP	CFM	BHP
0.2							1891	0.56	1632	0.42	1391	0.30
0.4					1796	0.57	1533	0.43	1290	0.31	1055	0.19
0.6	1948	0.74	1744	0.61	1446	0.44	1206	0.32	910	0.19		
0.8	1654	0.63	1409	0.48	1096	0.31						
1.0	1337	0.50	987	0.28								

High-Static Belt Drive — Down Shot

ESP (" H_2O)	Turns Open											
	0		1		2		3		4		5	
	CFM	BHP	CFM	BHP	CFM	BHP	CFM	BHP	CFM	BHP	CFM	BHP
0.6							1989	0.77	1712	0.59	1433	0.44
0.8					1929	0.79	1662	0.63	1384	0.47	1106	0.33
1.0			1952	0.88	1622	0.67	1335	0.49	1056	0.34		
1.2	1897	0.93	1611	0.73	1315	0.54	1008	0.36				
1.4	1616	0.80	1298	0.59	1007	0.42						
1.6	1316	0.66	1007	0.46								
1.8												

Note: Tables represent dry coil without filter; to compensate for filter, add 0.08" to measured E.S.P. SCFM correction for wet coil = 4%.

Airflow Data — CPG060B

Standard Direct-Drive — Horizontal

CFM	Static	Amps	Watts	RPM	Speed Tap
1416	0.1	1.63	176	588	T1
1295	0.2	1.61	174	621	
1200	0.3	1.68	186	660	
1133	0.4	1.79	196	704	
1045	0.5	1.90	208	753	
1543	0.1	2.00	220	627	T2
1485	0.2	2.12	236	671	
1425	0.3	2.20	250	698	
1352	0.4	2.26	258	748	
1304	0.5	2.39	274	786	
2107	0.1	4.02	502	797	T3
2031	0.2	4.13	518	819	
1980	0.3	4.27	536	858	
1954	0.4	4.37	554	880	
1887	0.5	4.48	572	913	
1839	0.6	4.58	582	940	
1782	0.7	4.72	602	968	
2224	0.1	4.73	592	832	T4
2165	0.2	4.79	612	860	
2123	0.3	4.91	630	891	
2079	0.4	5.01	642	913	
2029	0.5	5.14	666	946	
1978	0.6	5.26	676	969	
1926	0.7	5.38	698	1001	
1872	0.8	5.48	712	1028	
1817	0.9	5.58	722	1056	
2318	0.1	5.42	700	874	T5
2296	0.2	5.55	720	903	
2228	0.3	5.66	734	929	
2193	0.4	5.76	748	950	
2145	0.5	5.90	766	979	
2097	0.6	5.99	784	1012	
2054	0.7	6.10	798	1034	
1991	0.8	6.15	810	1050	
1952	0.9	6.26	826	1079	

Standard Direct-Drive — Down Shot

CFM	Static	Amps	Watts	RPM	Speed Tap
1237	0.1	1.64	180	638	T1
1191	0.2	1.75	194	682	
1127	0.3	1.80	200	715	
1065	0.4	1.89	214	753	
994	0.5	1.97	220	797	
1437	0.1	2.13	248	687	T2
1384	0.2	2.24	254	726	
1312	0.3	2.29	262	759	
1245	0.4	2.42	280	803	
1185	0.5	2.54	294	847	
1988	0.1	4.49	558	885	T3
1942	0.2	4.58	574	907	
1882	0.3	4.69	582	935	
1847	0.4	4.80	600	962	
1784	0.5	4.87	612	990	
1762	0.6	4.97	626	1008	
1688	0.7	5.05	642	1039	
2106	0.1	5.14	650	924	T4
2050	0.2	5.26	670	951	
1993	0.3	5.32	678	969	
1960	0.4	5.47	696	1001	
1920	0.5	5.54	706	1021	
1880	0.6	5.61	726	1041	
1810	0.7	5.73	736	1072	
1760	0.8	5.81	750	1093	
1694	0.9	5.84	752	1122	
2199	0.1	5.87	762	968	T5
2146	0.2	5.96	772	989	
2121	0.3	6.06	788	1012	
2066	0.4	6.15	804	1039	
2010	0.5	6.21	814	1056	
1978	0.6	6.32	834	1084	
1919	0.7	6.28	830	1102	
1837	0.8	6.22	814	1122	
1738	0.9	6.04	786	1127	

Notes

- Assumes dry coil with filter in place; SCFM correction for wet coil = 4%
- Five-ton models are shipped from the factory with speed tap set on T4.

Airflow Data — CPG060B (cont.)

Standard Belt Drive — Horizontal

ESP (" H_2O)	Turns Open											
	0		1		2		3		4		5	
	CFM	BHP	CFM	BHP	CFM	BHP	CFM	BHP	CFM	BHP	CFM	BHP
0.2					2460	0.96	2251	0.80	2073	0.65	1862	0.51
0.4			2408	1.00	2206	0.84	1982	0.68	1808	0.55	1572	0.41
0.6	2402	1.08	2173	0.89	1943	0.72	1701	0.55	1511	0.43		
0.8	2153	0.95	1917	0.77	1667	0.59						
1.0	1888	0.82	1634	0.63								
1.2	1601	0.67										

High-Static Belt Drive — Horizontal

ESP (" H_2O)	Turns Open											
	0		1		2		3		4		5	
	CFM	BHP	CFM	BHP	CFM	BHP	CFM	BHP	CFM	BHP	CFM	BHP
0.6									2219	0.95	1970	0.75
0.8							2215	1.04	1956	0.82	1697	0.62
1.0					2240	1.15	1957	0.90	1681	0.67		
1.2			2260	1.26	1983	1.00	1683	0.74				
1.4	2288	1.38	2009	1.10	1711	0.84						
1.6	2032	1.21	1741	0.93								
1.8	1776	1.04										

Standard Belt Drive — Down Shot

ESP (" H_2O)	Turns Open											
	0		1		2		3		4		5	
	CFM	BHP	CFM	BHP	CFM	BHP	CFM	BHP	CFM	BHP	CFM	BHP
0.2			2210	0.91	2041	0.76	1869	0.63	1739	0.52	1565	0.40
0.4	2197	0.98	2021	0.82	1841	0.67	1660	0.54	1521	0.44	1339	0.32
0.6	2002	0.88	1822	0.72	1635	0.58	1445	0.44	1288	0.35		
0.8	1799	0.77	1610	0.62	1425	0.48						
1.0	1587	0.67	1384	0.51								

High-Static Belt Drive — Down Shot

ESP (" H_2O)	Turns Open											
	0		1		2		3		4		5	
	CFM	BHP	CFM	BHP	CFM	BHP	CFM	BHP	CFM	BHP	CFM	BHP
0.6					2262	1.16	2051	0.95	1851	0.76	1657	0.60
0.8			2277	1.27	2070	1.05	1852	0.84	1646	0.66		
1.0	2304	1.39	2089	1.15	1872	0.93	1647	0.72				
1.2	2104	1.26	1893	1.03	1668	0.81						
1.4	1912	1.13	1690	0.90								
1.6	1720	1.00										

Note: Tables represent dry coil without filter; to compensate for filter, add 0.08" to measured E.S.P. SCFM correction for wet coil = 4%.

Airflow Data — CPG072B

Standard Belt Drive — Horizontal

ESP (In W.C.)	0 Turns		1 Turn		2 Turns		3 Turns		4 Turns		5 Turns	
	CFM	BHP	CFM	BHP	CFM	BHP	CFM	BHP	CFM	BHP	CFM	BHP
0.2							2749	1.18	2573	0.96	2402	0.79
0.4					2680	1.22	2544	1.06	2346	0.84	2164	0.68
0.6			2655	1.31	2498	1.10	2306	0.92	2094	0.72	1890	0.57
0.8	2703	1.47	2486	1.20	2263	0.97	2076	0.81				
1	2515	1.34	2272	1.07	2002	0.83						
1.2	2253	1.16	2028	0.93								

Standard Belt Drive — Down Shot

ESP (In W.C.)	0 Turns		1 Turn		2 Turns		3 Turns		4 Turns		5 Turns	
	CFM	BHP	CFM	BHP	CFM	BHP	CFM	BHP	CFM	BHP	CFM	BHP
0.2					2625	1.18	2486	1.02	2322	0.83	2152	0.68
0.4	2765	1.52	2596	1.28	2476	1.09	2327	0.94	2159	0.75	1938	0.59
0.6	2650	1.43	2452	1.18	2325	1.00	2070	0.80	1898	0.64		
0.8	2443	1.29	2251	1.06	2068	0.86	1868	0.71				
1	2258	1.17	2040	0.94	1806	0.73						
1.2	2021	1.02										

High Static Belt Drive — Horizontal

ESP (In W.C.)	0 Turns		1 Turn		2 Turns		3 Turns		4 Turns		5 Turns	
	CFM	BHP	CFM	BHP	CFM	BHP	CFM	BHP	CFM	BHP	CFM	BHP
0.6									2677	1.29	2486	1.07
0.8							2690	1.42	2529	1.20	2263	0.94
1					2740	1.60	2471	1.27	2246	1.02	1972	0.79
1.2			2748	1.74	2518	1.44	2255	1.13	1970	0.87		
1.4	2797	1.87	2562	1.59	2273	1.27	2025	0.99				
1.6	2556	1.67	2314	1.40	2035	1.11						
1.8	2342	1.50	2037	1.21								
2	2137	1.35										

High Static Belt Drive — Down Shot

ESP (In W.C.)	0 Turns		1 Turn		2 Turns		3 Turns		4 Turns		5 Turns	
	CFM	BHP	CFM	BHP	CFM	BHP	CFM	BHP	CFM	BHP	CFM	BHP
0.6					2793	1.64	2575	1.37	2407	1.15	2250	0.96
0.8			2775	1.76	2638	1.53	2407	1.25	2226	1.04	2011	0.84
1	2821	1.89	2660	1.67	2407	1.36	2194	1.12	2012	0.92		
1.2	2696	1.79	2497	1.54	2228	1.23	1977	0.98				
1.4	2455	1.59	2236	1.35	2013	1.10						
1.6	2262	1.44	2032	1.20								
1.8	2069	1.30										

Expanded Cooling Data — CPG036B

			Outdoor Ambient Temperature																							
			65				75				85				95				105				115			
			Entering Indoor Wet Bulb Temperature																							
IDB	Airflow		59	63	67	71	59	63	67	71	59	63	67	71	59	63	67	71	59	63	67	71	59	63	67	71
70	1350	MBh	33.9	35.1	38.5	-	33.1	34.3	37.6	-	32.3	33.5	36.7	-	31.5	32.7	35.8	-	30.0	31.1	34.0	-	27.8	28.8	31.5	-
		S/T	0.72	0.60	0.42	-	0.75	0.63	0.43	-	0.77	0.64	0.44	-	0.79	0.66	0.46	-	0.82	0.69	0.48	-	0.83	0.69	0.48	-
		ΔT	17	14	11	-	17	15	11	-	17	15	11	-	17	15	11	-	17	15	11	-	16	14	10	-
		kW	2.44	2.48	2.56	-	2.61	2.66	2.74	-	2.76	2.82	2.90	-	2.90	2.95	3.05	-	3.01	3.07	3.17	-	3.11	3.17	3.27	-
		Amps	8.5	8.7	8.9	-	9.0	9.2	9.4	-	9.6	9.8	10.0	-	10.1	10.3	10.5	-	10.6	10.8	11.0	-	11.1	11.3	11.6	-
		HI PR	221	237	251	-	247	266	281	-	281	303	320	-	321	345	364	-	361	388	410	-	398	429	453	-
		LO PR	107	114	124	-	113	120	131	-	118	125	137	-	124	131	144	-	130	138	150	-	134	143	156	-
	1200	MBh	32.9	34.1	37.4	-	32.2	33.3	36.5	-	31.4	32.5	35.6	-	30.6	31.7	34.8	-	29.1	30.2	33.0	-	26.9	27.9	30.6	-
		S/T	0.69	0.58	0.40	-	0.71	0.60	0.41	-	0.73	0.61	0.42	-	0.76	0.63	0.44	-	0.79	0.66	0.45	-	0.79	0.66	0.46	-
		ΔT	17	15	11	-	18	15	12	-	18	15	12	-	18	15	12	-	18	15	11	-	16	14	11	-
		kW	2.42	2.47	2.54	-	2.59	2.64	2.72	-	2.74	2.80	2.88	-	2.87	2.93	3.02	-	2.99	3.05	3.14	-	3.08	3.15	3.25	-
		Amps	8.5	8.6	8.8	-	8.9	9.1	9.3	-	9.5	9.7	9.9	-	10.0	10.2	10.4	-	10.5	10.7	11.0	-	11.0	11.2	11.5	-
		HI PR	218	235	248	-	245	264	278	-	279	300	317	-	317	342	361	-	357	384	406	-	394	425	448	-
		LO PR	106	113	123	-	112	119	130	-	116	124	135	-	122	130	142	-	128	136	149	-	133	141	154	-
	1050	MBh	30.4	31.5	34.5	-	29.7	30.8	33.7	-	29.0	30.0	32.9	-	28.3	29.3	32.1	-	26.9	27.8	30.5	-	24.9	25.8	28.2	-
		S/T	0.67	0.56	0.38	-	0.69	0.58	0.40	-	0.71	0.59	0.41	-	0.73	0.61	0.42	-	0.76	0.63	0.44	-	0.76	0.64	0.44	-
		ΔT	18	15	12	-	18	16	12	-	18	16	12	-	18	16	12	-	18	15	12	-	17	14	11	-
		kW	2.37	2.41	2.48	-	2.53	2.58	2.66	-	2.68	2.73	2.81	-	2.81	2.86	2.95	-	2.92	2.98	3.07	-	3.01	3.07	3.17	-
		Amps	8.3	8.4	8.6	-	8.8	8.9	9.1	-	9.3	9.5	9.7	-	9.8	10.0	10.2	-	10.3	10.5	10.7	-	10.7	10.9	11.2	-
		HI PR	212	228	241	-	238	256	270	-	270	291	307	-	308	331	350	-	346	373	394	-	383	412	435	-
		LO PR	103	109	120	-	109	116	126	-	113	120	131	-	119	126	138	-	124	132	144	-	129	137	149	-
75	1350	MBh	34.5	35.5	38.4	41.2	33.7	34.7	37.5	40.3	32.9	33.8	36.6	39.3	32.1	33.0	35.7	38.4	30.5	31.4	34.0	36.4	28.2	29.1	31.5	33.8
		S/T	0.82	0.74	0.56	0.36	0.85	0.76	0.58	0.37	0.87	0.78	0.59	0.38	0.90	0.81	0.61	0.39	0.94	0.84	0.63	0.41	0.94	0.84	0.64	0.41
		ΔT	19	18	15	10	20	18	15	10	20	18	15	10	20	18	15	10	19	18	15	10	18	17	14	9
		kW	2.46	2.50	2.58	2.65	2.63	2.68	2.76	2.85	2.78	2.84	2.93	3.02	2.92	2.98	3.07	3.17	3.03	3.10	3.19	3.29	3.13	3.20	3.30	3.40
		Amps	8.6	8.7	8.9	9.2	9.1	9.2	9.5	9.7	9.6	9.8	10.1	10.4	10.1	10.3	10.6	10.9	10.6	10.8	11.1	11.5	11.1	11.4	11.7	12.0
		HI PR	223	240	253	264	250	269	284	296	284	306	323	337	324	348	368	384	364	392	414	432	402	433	457	477
		LO PR	108	115	126	134	114	122	133	141	119	126	138	147	125	133	145	154	131	139	152	162	135	144	157	167
	1200	MBh	33.5	34.5	37.3	40.0	32.7	33.7	36.4	39.1	31.9	32.9	35.6	38.2	31.1	**32.1**	34.7	37.2	29.6	30.5	33.0	35.4	27.4	28.2	30.5	32.8
		S/T	0.78	0.70	0.53	0.34	0.81	0.73	0.55	0.35	0.83	0.75	0.56	0.36	0.86	**0.77**	0.58	0.37	0.89	0.80	0.60	0.39	0.90	0.81	0.61	0.39
		ΔT	20	19	15	10	20	19	15	11	20	19	15	11	21	**19**	15	11	20	19	15	11	19	17	14	10
		kW	2.44	2.49	2.56	2.63	2.61	2.66	2.74	2.82	2.76	2.82	2.90	2.99	2.90	**2.96**	3.05	3.14	3.01	3.07	3.17	3.27	3.11	3.17	3.27	3.38
		Amps	8.5	8.7	8.9	9.1	9.0	9.2	9.4	9.6	9.6	9.8	10.0	10.3	10.1	**10.3**	10.5	10.8	10.6	10.8	11.1	11.4	11.1	11.3	11.6	11.9
		HI PR	221	237	251	261	248	266	281	293	281	303	320	334	321	**345**	364	380	361	388	410	427	399	429	453	472
		LO PR	107	114	124	133	113	120	131	140	118	125	137	146	124	**131**	144	153	130	138	150	160	134	143	156	166
	1050	MBh	30.9	31.8	34.4	37.0	30.2	31.1	33.6	36.1	29.5	30.3	32.8	35.2	28.7	29.6	32.0	34.4	27.3	28.1	30.4	32.7	25.3	26.0	28.2	30.3
		S/T	0.76	0.68	0.51	0.33	0.78	0.70	0.53	0.34	0.80	0.72	0.54	0.35	0.83	0.74	0.56	0.36	0.86	0.77	0.58	0.37	0.87	0.78	0.59	0.38
		ΔT	20	19	15	11	21	19	16	11	21	19	16	11	21	19	16	11	21	19	16	11	19	18	15	10
		kW	2.38	2.43	2.50	2.57	2.55	2.60	2.68	2.76	2.70	2.75	2.84	2.92	2.83	2.89	2.97	3.07	2.94	3.00	3.09	3.19	3.03	3.10	3.19	3.30
		Amps	8.3	8.5	8.7	8.9	8.8	9.0	9.2	9.5	9.4	9.5	9.8	10.1	9.9	10.0	10.3	10.6	10.3	10.5	10.8	11.1	10.8	11.0	11.3	11.7
		HI PR	214	230	243	254	240	258	273	285	273	294	310	324	311	335	353	369	350	376	398	415	387	416	439	458
		LO PR	104	111	121	129	110	117	128	136	114	121	133	141	120	128	139	148	126	134	146	155	130	138	151	161

IDB = Entering Indoor Dry Bulb Temperature
High and low pressures are measured at the liquid and suction service valves.

Shaded area reflects ACCA (TVA) Rating conditions

kW = Total system power
Amps = outdoor unit amps (comp.+fan)

Expanded Cooling Data — CPG036B (cont.)

			Outdoor Ambient Temperature																							
			65				75				85				95				105				115			
			Entering Indoor Wet Bulb Temperature																							
IDB	Airflow		59	63	67	71	59	63	67	71	59	63	67	71	59	63	67	71	59	63	67	71	59	63	67	71
80	1350	MBh	35.1	35.9	38.3	41.0	34.3	35.0	37.4	40.0	33.5	34.2	36.5	39.0	32.6	33.4	35.6	38.1	31.0	31.7	33.9	36.2	28.7	29.4	31.4	33.5
		S/T	0.90	0.85	0.69	0.51	0.93	0.88	0.71	0.53	0.96	0.90	0.73	0.55	1.00	0.93	0.75	0.56	1.00	0.96	0.78	0.59	1.00	0.97	0.79	0.59
		ΔT	22	21	18	14	22	21	18	15	22	21	18	15	22	21	18	15	21	21	18	14	20	19	17	13
		kW	2.47	2.52	2.60	2.67	2.65	2.70	2.78	2.87	2.80	2.86	2.95	3.04	2.94	3.00	3.09	3.19	3.06	3.12	3.22	3.32	3.16	3.22	3.33	3.43
		Amps	8.6	8.8	9.0	9.2	9.1	9.3	9.5	9.8	9.7	9.9	10.1	10.4	10.2	10.4	10.7	11.0	10.7	10.9	11.2	11.6	11.2	11.4	11.7	12.1
		HI PR	225	242	256	267	253	272	287	299	287	309	326	340	327	352	372	388	368	396	418	436	407	438	462	482
		LO PR	109	116	127	135	116	123	134	143	120	128	139	148	126	134	146	156	132	141	153	163	137	145	159	169
	1200	MBh	34.1	34.8	37.2	39.8	33.3	34.0	36.3	38.8	32.5	33.2	35.5	37.9	31.7	32.4	**34.6**	37.0	30.1	30.8	32.9	35.1	27.9	28.5	30.4	32.5
		S/T	0.86	0.81	0.66	0.49	0.89	0.84	0.68	0.51	0.91	0.86	0.70	0.52	0.94	0.88	**0.72**	0.54	0.98	0.92	0.75	0.56	0.99	0.93	0.75	0.56
		ΔT	22	22	19	15	23	22	19	15	23	22	19	15	23	22	**19**	15	23	22	19	15	21	20	18	14
		kW	2.46	2.50	2.58	2.65	2.63	2.68	2.76	2.85	2.78	2.84	2.93	3.02	2.92	2.98	**3.07**	3.17	3.03	3.10	3.19	3.29	3.13	3.20	3.30	3.40
		Amps	8.6	8.7	8.9	9.2	9.1	9.2	9.5	9.7	9.6	9.8	10.1	10.4	10.1	10.3	**10.6**	10.9	10.6	10.8	11.1	11.5	11.1	11.4	11.7	12.0
		HI PR	223	240	253	264	250	269	284	296	284	306	323	337	324	348	**368**	384	364	392	414	432	403	433	457	477
		LO PR	108	115	126	134	114	122	133	141	119	126	138	147	125	133	**145**	154	131	139	152	162	135	144	157	167
	1050	MBh	31.4	32.1	34.3	36.7	30.7	31.4	33.5	35.8	30.0	30.6	32.7	35.0	29.3	29.9	31.9	34.1	27.8	28.4	30.3	32.4	25.7	26.3	28.1	30.0
		S/T	0.83	0.78	0.63	0.47	0.86	0.81	0.66	0.49	0.88	0.83	0.67	0.50	0.91	0.85	0.69	0.52	0.94	0.89	0.72	0.54	0.95	0.89	0.73	0.54
		ΔT	23	22	19	15	23	22	19	15	23	22	19	15	23	22	19	16	23	22	19	15	21	21	18	14
		kW	2.40	2.45	2.52	2.59	2.57	2.62	2.70	2.78	2.72	2.77	2.86	2.95	2.85	2.91	3.00	3.09	2.96	3.02	3.12	3.22	3.06	3.12	3.22	3.32
		Amps	8.4	8.5	8.7	9.0	8.9	9.0	9.3	9.5	9.4	9.6	9.9	10.1	9.9	10.1	10.4	10.7	10.4	10.6	10.9	11.2	10.9	11.1	11.4	11.7
		HI PR	216	233	246	256	243	261	276	287	276	297	313	327	314	338	357	372	353	380	402	419	390	420	444	463
		LO PR	105	112	122	130	111	118	129	137	115	123	134	143	121	129	141	150	127	135	147	157	131	140	152	162
85	1350	MBh	35.7	36.4	38.1	40.7	34.9	35.6	37.2	39.7	34.0	34.7	36.3	38.8	33.2	33.9	35.5	37.8	31.6	32.2	33.7	35.9	29.2	29.8	31.2	33.3
		S/T	0.95	0.91	0.82	0.67	0.98	0.95	0.85	0.69	1.00	0.97	0.87	0.71	1.00	1.00	0.90	0.73	1.00	1.00	0.94	0.76	1.00	1.00	0.94	0.77
		ΔT	23	23	21	18	23	23	22	19	23	23	22	19	23	23	22	19	21	22	21	19	20	20	20	17
		kW	2.49	2.54	2.61	2.69	2.67	2.72	2.80	2.89	2.83	2.88	2.97	3.06	2.96	3.03	3.12	3.22	3.08	3.15	3.24	3.35	3.18	3.25	3.35	3.46
		Amps	8.7	8.8	9.0	9.3	9.2	9.4	9.6	9.9	9.8	10.0	10.2	10.5	10.3	10.5	10.8	11.1	10.8	11.0	11.3	11.6	11.3	11.5	11.8	12.2
		HI PR	227	245	258	269	255	274	290	302	290	312	330	344	330	356	375	392	372	400	422	440	411	442	467	487
		LO PR	110	117	128	137	117	124	135	144	121	129	141	150	127	135	148	158	133	142	155	165	138	147	160	171
	1200	MBh	34.7	35.3	37.0	39.5	33.9	34.5	36.1	38.6	33.1	33.7	35.3	37.6	32.2	32.9	34.4	36.7	30.6	31.2	32.7	34.9	28.4	28.9	30.3	32.3
		S/T	0.90	0.87	0.79	0.64	0.93	0.90	0.81	0.66	0.96	0.92	0.83	0.68	0.99	0.95	0.86	0.70	1.00	0.99	0.89	0.73	1.00	1.00	0.90	0.73
		ΔT	24	24	22	19	24	24	23	20	24	24	23	20	24	24	23	20	23	24	22	19	22	22	21	18
		kW	2.47	2.52	2.60	2.67	2.65	2.70	2.78	2.87	2.80	2.86	2.95	3.04	2.94	3.00	3.09	3.19	3.06	3.12	3.22	3.32	3.16	3.22	3.33	3.43
		Amps	8.6	8.8	9.0	9.2	9.1	9.3	9.5	9.8	9.7	9.9	10.1	10.4	10.2	10.4	10.7	11.0	10.7	10.9	11.2	11.6	11.2	11.4	11.7	12.1
		HI PR	225	242	256	267	253	272	287	299	287	309	326	340	327	352	372	388	368	396	418	436	407	438	462	482
		LO PR	109	116	127	135	116	123	134	143	120	128	139	148	126	134	146	156	132	141	153	163	137	145	159	169
	1050	MBh	32.0	32.6	34.2	36.4	31.3	31.9	33.4	35.6	30.5	31.1	32.6	34.7	29.8	30.3	31.8	33.9	28.3	28.8	30.2	32.2	26.2	26.7	28.0	29.8
		S/T	0.87	0.84	0.76	0.61	0.90	0.87	0.78	0.64	0.92	0.89	0.80	0.65	0.95	0.92	0.83	0.67	0.99	0.95	0.86	0.70	1.00	0.96	0.87	0.71
		ΔT	24	24	23	20	25	24	23	20	25	24	23	20	25	24	23	20	25	24	23	20	23	23	21	18
		kW	2.42	2.47	2.54	2.61	2.59	2.64	2.72	2.80	2.74	2.80	2.88	2.97	2.87	2.93	3.02	3.12	2.99	3.05	3.14	3.24	3.08	3.15	3.25	3.35
		Amps	8.5	8.6	8.8	9.0	8.9	9.1	9.3	9.6	9.5	9.7	9.9	10.2	10.0	10.2	10.4	10.8	10.5	10.7	11.0	11.3	11.0	11.2	11.5	11.8
		HI PR	218	235	248	259	245	264	278	290	279	300	317	330	317	341	361	376	357	384	406	423	394	424	448	467
		LO PR	106	113	123	131	112	119	130	139	116	124	135	144	122	130	142	151	128	136	149	159	133	141	154	164

IDB = Entering Indoor Dry Bulb Temperature
High and low pressures are measured at the liquid and suction service valves.

Shaded area reflects AHRI (TVA) Rating conditions

kW = Total system power
Amps = outdoor unit amps (comp.+fan)

Expanded Cooling Data — CPG048B

			Outdoor Ambient Temperature																							
			65				75				85				95				105				115			
			Entering Indoor Wet Bulb Temperature																							
IDB	Airflow		59	63	67	71	59	63	67	71	59	63	67	71	59	63	67	71	59	63	67	71	59	63	67	71
70	1800	MBh	44.6	46.2	50.6	-	43.5	45.1	49.5	-	42.5	44.1	48.3	-	41.5	43.0	47.1	-	39.4	40.8	44.7	-	36.5	37.8	41.4	-
		S/T	0.74	0.62	0.43	-	0.77	0.64	0.44	-	0.79	0.66	0.45	-	0.81	0.68	0.47	-	0.84	0.70	0.49	-	0.85	0.71	0.49	-
		ΔT	17	15	11	-	17	15	11	-	17	15	11	-	17	15	11	-	17	15	11	-	16	14	10	-
		kW	3.13	3.19	3.29	-	3.36	3.43	3.53	-	3.56	3.63	3.75	-	3.74	3.82	3.94	-	3.89	3.97	4.10	-	4.02	4.10	4.23	-
		Amps	10.2	10.4	10.6	-	10.8	11.0	11.3	-	11.5	11.7	12.0	-	12.1	12.3	12.6	-	12.7	12.9	13.3	-	13.3	13.5	13.9	-
		HI PR	239	257	271	-	268	288	304	-	305	328	346	-	347	373	394	-	390	420	444	-	431	464	490	-
		LO PR	110	117	128	-	116	124	135	-	121	129	141	-	127	135	148	-	133	142	155	-	138	147	160	-
	1600	MBh	43.3	44.9	49.2	-	42.3	43.8	48.0	-	41.3	42.8	46.9	-	40.3	41.7	45.7	-	38.3	39.6	43.4	-	35.4	36.7	40.2	-
		S/T	0.70	0.59	0.41	-	0.73	0.61	0.42	-	0.75	0.63	0.43	-	0.77	0.65	0.45	-	0.80	0.67	0.46	-	0.81	0.68	0.47	-
		ΔT	18	15	12	-	18	15	12	-	18	15	12	-	18	15	12	-	18	15	12	-	16	14	11	-
		kW	3.11	3.17	3.27	-	3.33	3.40	3.51	-	3.53	3.61	3.72	-	3.71	3.79	3.90	-	3.86	3.94	4.06	-	3.99	4.07	4.20	-
		Amps	10.1	10.3	10.6	-	10.7	10.9	11.2	-	11.4	11.6	11.9	-	12.0	12.2	12.5	-	12.6	12.8	13.2	-	13.2	13.4	13.8	-
		HI PR	236	254	269	-	265	285	301	-	302	325	343	-	344	370	390	-	386	416	439	-	427	460	485	-
		LO PR	109	116	127	-	115	123	134	-	120	128	139	-	126	134	146	-	132	140	153	-	136	145	158	-
	1400	MBh	40.0	41.4	45.4	-	39.0	40.4	44.3	-	38.1	39.5	43.3	-	37.2	38.5	42.2	-	35.3	36.6	40.1	-	32.7	33.9	37.1	-
		S/T	0.68	0.57	0.39	-	0.70	0.59	0.41	-	0.72	0.60	0.42	-	0.75	0.62	0.43	-	0.77	0.65	0.45	-	0.78	0.65	0.45	-
		ΔT	18	15	12	-	18	16	12	-	18	16	12	-	18	16	12	-	18	16	12	-	17	15	11	-
		kW	3.04	3.10	3.19	-	3.26	3.32	3.42	-	3.45	3.52	3.63	-	3.62	3.70	3.81	-	3.76	3.84	3.97	-	3.89	3.97	4.10	-
		Amps	9.9	10.1	10.3	-	10.5	10.7	11.0	-	11.2	11.4	11.7	-	11.7	12.0	12.3	-	12.3	12.6	12.9	-	12.9	13.1	13.5	-
		HI PR	229	247	261	-	257	277	292	-	293	315	332	-	333	359	379	-	375	403	426	-	414	446	471	-
		LO PR	106	113	123	-	112	119	130	-	116	124	135	-	122	130	142	-	128	136	149	-	132	141	154	-
75	1800	MBh	45.3	46.7	50.5	54.2	44.3	45.6	49.4	53.0	43.2	44.5	48.2	51.7	42.2	43.4	47.0	50.4	40.1	41.3	44.7	47.9	37.1	38.2	41.4	44.4
		S/T	0.84	0.75	0.57	0.37	0.87	0.78	0.59	0.38	0.89	0.80	0.60	0.39	0.92	0.82	0.62	0.40	0.96	0.86	0.65	0.42	0.96	0.86	0.65	0.42
		ΔT	19	18	15	10	20	18	15	10	20	18	15	10	20	18	15	10	20	18	15	10	18	17	14	10
		kW	3.16	3.22	3.32	3.42	3.39	3.46	3.56	3.67	3.59	3.66	3.78	3.90	3.77	3.85	3.97	4.09	3.92	4.00	4.13	4.26	4.05	4.14	4.27	4.41
		Amps	10.3	10.4	10.7	11.0	10.9	11.1	11.3	11.7	11.6	11.8	12.1	12.4	12.2	12.4	12.7	13.1	12.8	13.0	13.4	13.8	13.4	13.6	14.0	14.4
		HI PR	241	260	274	286	271	291	307	321	308	331	350	365	351	377	398	415	394	424	448	467	436	469	495	516
		LO PR	111	118	129	138	118	125	137	146	122	130	142	151	128	137	149	159	135	143	156	167	139	148	162	172
	1600	MBh	44.0	45.3	49.1	52.7	43.0	44.3	47.9	51.4	42.0	43.2	46.8	50.2	41.0	**42.2**	45.6	49.0	38.9	40.1	43.4	46.5	36.0	37.1	40.2	43.1
		S/T	0.80	0.72	0.54	0.35	0.83	0.74	0.56	0.36	0.85	0.76	0.58	0.37	0.88	**0.79**	0.59	0.38	0.91	0.82	0.62	0.40	0.92	0.82	0.62	0.40
		ΔT	20	19	15	11	21	19	15	11	21	19	15	11	21	**19**	16	11	20	19	15	11	19	18	14	10
		kW	3.13	3.20	3.29	3.39	3.36	3.43	3.53	3.64	3.56	3.63	3.75	3.87	3.74	**3.82**	3.94	4.06	3.89	3.97	4.10	4.23	4.02	4.10	4.24	4.37
		Amps	10.2	10.4	10.6	10.9	10.8	11.0	11.3	11.6	11.5	11.7	12.0	12.3	12.1	**12.3**	12.6	13.0	12.7	12.9	13.3	13.7	13.3	13.5	13.9	14.3
		HI PR	239	257	271	283	268	288	304	318	305	328	346	361	347	**373**	394	411	390	420	444	463	431	464	490	511
		LO PR	110	117	128	136	116	124	135	144	121	129	141	150	127	**135**	148	157	133	142	155	165	138	147	160	171
	1400	MBh	40.6	41.8	45.3	48.6	39.7	40.9	44.2	47.5	38.7	39.9	43.2	46.3	37.8	38.9	42.1	45.2	35.9	37.0	40.0	42.9	33.3	34.2	37.1	39.8
		S/T	0.77	0.69	0.52	0.34	0.80	0.72	0.54	0.35	0.82	0.73	0.56	0.36	0.85	0.76	0.57	0.37	0.88	0.79	0.60	0.38	0.89	0.79	0.60	0.39
		ΔT	21	19	16	11	21	19	16	11	21	19	16	11	21	19	16	11	21	19	16	11	19	18	15	10
		kW	3.06	3.12	3.22	3.31	3.28	3.35	3.45	3.56	3.48	3.55	3.66	3.77	3.65	3.73	3.84	3.96	3.80	3.88	4.00	4.13	3.92	4.00	4.13	4.27
		Amps	10.0	10.2	10.4	10.7	10.6	10.8	11.0	11.3	11.3	11.5	11.7	12.1	11.8	12.1	12.4	12.7	12.4	12.6	13.0	13.4	13.0	13.2	13.6	14.0
		HI PR	232	249	263	275	260	280	295	308	296	318	336	350	337	362	383	399	379	408	430	449	418	450	475	496
		LO PR	107	114	124	132	113	120	131	140	117	125	136	145	123	131	143	153	129	138	150	160	134	142	155	165

IDB = Entering Indoor Dry Bulb Temperature

High and low pressures are measured at the liquid and suction service valves.

Shaded area reflects ACCA (TVA) Rating conditions

kW = Total system power

Amps = outdoor unit amps (comp.+fan)

Expanded Cooling Data — CPG048B (cont.)

			Outdoor Ambient Temperature																							
			65				75				85				95				105				115			
			Entering Indoor Wet Bulb Temperature																							
IDB	Airflow		59	63	67	71	59	63	67	71	59	63	67	71	59	63	67	71	59	63	67	71	59	63	67	71
80	1800	MBh	46.1	47.2	50.4	53.9	45.1	46.1	49.2	52.6	44.0	45.0	48.0	51.4	42.9	43.9	46.9	50.1	40.8	41.7	44.5	47.6	37.8	38.6	41.2	44.1
		S/T	0.92	0.86	0.70	0.53	0.95	0.90	0.73	0.54	1.00	0.92	0.75	0.56	1.00	0.95	0.77	0.58	1.00	1.00	0.80	0.60	1.00	1.00	0.81	0.60
		ΔT	22	21	18	14	22	21	18	15	22	21	18	15	22	21	18	15	21	21	18	15	19	20	17	14
		kW	3.18	3.24	3.34	3.44	3.41	3.48	3.59	3.70	3.62	3.69	3.81	3.93	3.80	3.88	4.00	4.13	3.95	4.04	4.16	4.30	4.08	4.17	4.31	4.45
		Amps	10.3	10.5	10.8	11.1	10.9	11.1	11.4	11.7	11.7	11.9	12.2	12.5	12.3	12.5	12.8	13.2	12.9	13.1	13.5	13.9	13.5	13.7	14.1	14.5
		HI PR	244	262	277	289	273	294	311	324	311	335	353	368	354	381	402	420	398	429	453	472	440	474	500	522
		LO PR	112	120	131	139	119	126	138	147	124	131	143	153	130	138	151	160	136	145	158	168	141	150	163	174
	1600	MBh	44.8	45.8	48.9	52.3	43.8	44.7	47.8	51.1	42.7	43.7	46.6	49.9	41.7	42.6	**45.5**	48.6	39.6	40.5	43.2	46.2	36.7	37.5	40.0	42.8
		S/T	0.88	0.82	0.67	0.50	0.91	0.85	0.70	0.52	0.93	0.88	0.71	0.53	0.96	0.90	**0.74**	0.55	1.00	0.94	0.76	0.57	1.00	0.95	0.77	0.58
		ΔT	23	22	19	15	23	22	19	15	23	22	19	15	23	22	**19**	15	23	22	19	15	21	20	18	14
		kW	3.16	3.22	3.32	3.42	3.39	3.46	3.56	3.67	3.59	3.66	3.78	3.90	3.77	3.85	**3.97**	4.10	3.92	4.00	4.13	4.26	4.05	4.14	4.27	4.41
		Amps	10.3	10.4	10.7	11.0	10.9	11.1	11.3	11.7	11.6	11.8	12.1	12.4	12.2	12.4	**12.7**	13.1	12.8	13.0	13.4	13.8	13.4	13.6	14.0	14.4
		HI PR	241	260	274	286	271	291	308	321	308	331	350	365	351	377	**398**	415	394	424	448	467	436	469	495	516
		LO PR	111	118	129	138	118	125	137	146	122	130	142	151	128	137	**149**	159	135	143	156	167	139	148	162	172
	1400	MBh	41.4	42.3	45.1	48.3	40.4	41.3	44.1	47.1	39.4	40.3	43.0	46.0	38.5	39.3	42.0	44.9	36.5	37.3	39.9	42.6	33.9	34.6	37.0	39.5
		S/T	0.85	0.79	0.65	0.48	0.88	0.82	0.67	0.50	0.90	0.84	0.69	0.51	0.93	0.87	0.71	0.53	0.96	0.90	0.74	0.55	0.97	0.91	0.74	0.55
		ΔT	23	22	19	15	23	22	19	16	23	22	19	16	23	22	20	16	23	22	19	15	22	21	18	14
		kW	3.09	3.15	3.24	3.34	3.31	3.38	3.48	3.59	3.50	3.58	3.69	3.80	3.68	3.76	3.87	4.00	3.83	3.91	4.03	4.16	3.95	4.04	4.17	4.30
		Amps	10.1	10.2	10.5	10.8	10.7	10.8	11.1	11.4	11.3	11.5	11.8	12.2	11.9	12.1	12.4	12.8	12.5	12.7	13.1	13.5	13.1	13.3	13.7	14.1
		HI PR	234	252	266	277	263	282	298	311	299	321	339	354	340	366	386	403	383	412	435	453	423	455	480	501
		LO PR	108	115	125	134	114	121	133	141	119	126	138	147	125	133	145	154	131	139	152	162	135	144	157	167
85	1800	MBh	47.0	47.9	50.1	53.5	45.9	46.7	49.0	52.2	44.8	45.6	47.8	51.0	43.7	44.5	46.6	49.7	41.5	42.3	44.3	47.3	38.4	39.2	41.0	43.8
		S/T	0.97	0.93	0.84	0.68	1.00	0.97	0.87	0.71	1.00	0.99	0.89	0.73	1.00	1.00	0.92	0.75	1.00	1.00	0.96	0.78	1.00	1.00	0.97	0.78
		ΔT	23	23	22	19	23	23	22	19	23	23	22	19	22	23	22	19	21	22	22	19	20	20	20	18
		kW	3.20	3.27	3.37	3.47	3.44	3.51	3.62	3.73	3.65	3.72	3.84	3.96	3.83	3.91	4.03	4.16	3.98	4.07	4.20	4.33	4.12	4.21	4.34	4.48
		Amps	10.4	10.6	10.8	11.1	11.0	11.2	11.5	11.8	11.7	11.9	12.3	12.6	12.3	12.6	12.9	13.3	13.0	13.2	13.6	14.0	13.6	13.8	14.2	14.6
		HI PR	246	265	280	292	276	297	314	327	314	338	357	372	358	385	406	424	402	433	457	477	444	478	505	527
		LO PR	114	121	132	141	120	128	139	148	125	133	145	154	131	139	152	162	137	146	160	170	142	151	165	176
	1600	MBh	45.6	46.5	48.7	51.9	44.5	45.4	47.5	50.7	43.5	44.3	46.4	49.5	42.4	43.2	45.3	48.3	40.3	41.1	43.0	45.9	37.3	38.0	39.8	42.5
		S/T	0.92	0.89	0.80	0.65	0.95	0.92	0.83	0.67	0.98	0.94	0.85	0.69	1.00	0.97	0.88	0.71	1.00	1.00	0.91	0.74	1.00	1.00	0.92	0.75
		ΔT	24	24	22	19	24	24	23	20	24	24	23	20	24	24	23	20	23	24	23	20	21	22	21	18
		kW	3.18	3.24	3.34	3.44	3.41	3.48	3.59	3.70	3.62	3.69	3.81	3.93	3.80	3.88	4.00	4.13	3.95	4.04	4.16	4.30	4.08	4.17	4.31	4.45
		Amps	10.3	10.5	10.8	11.1	10.9	11.1	11.4	11.7	11.7	11.9	12.2	12.5	12.3	12.5	12.8	13.2	12.9	13.1	13.5	13.9	13.5	13.7	14.1	14.5
		HI PR	244	262	277	289	273	294	311	324	311	335	353	368	354	381	402	420	398	429	453	472	440	474	500	522
		LO PR	112	120	131	139	119	126	138	147	124	131	143	153	130	138	151	160	136	145	158	168	141	150	163	174
	1400	MBh	42.1	42.9	44.9	47.9	41.1	41.9	43.9	46.8	40.1	40.9	42.8	45.7	39.1	39.9	41.8	44.6	37.2	37.9	39.7	42.4	34.4	35.1	36.8	39.2
		S/T	0.89	0.86	0.77	0.63	0.92	0.89	0.80	0.65	0.94	0.91	0.82	0.67	0.97	0.94	0.85	0.69	1.00	0.98	0.88	0.71	1.00	0.98	0.89	0.72
		ΔT	25	24	23	20	25	24	23	20	25	24	23	20	25	25	23	20	24	24	23	20	23	23	21	19
		kW	3.11	3.17	3.26	3.36	3.33	3.40	3.50	3.61	3.53	3.61	3.72	3.83	3.71	3.78	3.90	4.03	3.86	3.94	4.06	4.19	3.98	4.07	4.20	4.34
		Amps	10.1	10.3	10.6	10.8	10.7	10.9	11.2	11.5	11.4	11.6	11.9	12.3	12.0	12.2	12.5	12.9	12.6	12.8	13.2	13.6	13.2	13.4	13.8	14.2
		HI PR	236	254	269	280	265	285	301	314	302	324	343	357	343	370	390	407	386	416	439	458	427	459	485	506
		LO PR	109	116	127	135	115	123	134	143	120	127	139	148	126	134	146	156	132	140	153	163	136	145	158	169

IDB = Entering Indoor Dry Bulb Temperature

High and low pressures are measured at the liquid and suction service valves.

Shaded area reflects AHRI (TVA) Rating conditions

kW = Total system power

Amps = outdoor unit amps (comp.+fan)

Expanded Cooling Data — CPG060B

			Outdoor Ambient Temperature																							
			65				75				85				95				105				115			
			Entering Indoor Wet Bulb Temperature																							
IDB	Airflow		59	63	67	71	59	63	67	71	59	63	67	71	59	63	67	71	59	63	67	71	59	63	67	71
70	2250	MBh	58.3	60.4	66.2	-	56.9	59.0	64.7	-	55.6	57.6	63.1	-	54.2	56.2	61.6	-	51.5	53.4	58.5	-	47.7	49.5	54.2	-
		S/T	0.73	0.61	0.42	-	0.75	0.63	0.44	-	0.77	0.65	0.45	-	0.80	0.67	0.46	-	0.83	0.69	0.48	-	0.84	0.70	0.48	-
		ΔT	17	15	11	-	18	15	12	-	18	15	12	-	18	15	12	-	17	15	11	-	16	14	11	-
		kW	3.97	4.06	4.18	-	4.27	4.36	4.50	-	4.54	4.64	4.78	-	4.77	4.88	5.03	-	4.97	5.08	5.25	-	5.14	5.25	5.43	-
		Amps	12.4	12.7	13.0	-	13.3	13.5	13.9	-	14.2	14.5	14.9	-	15.0	15.3	15.7	-	15.8	16.1	16.6	-	16.6	17.0	17.5	-
		HI PR	244	262	277	-	273	294	311	-	311	335	353	-	354	381	402	-	398	429	453	-	440	474	500	-
		LO PR	107	114	124	-	113	120	131	-	118	125	137	-	124	131	144	-	130	138	150	-	134	143	156	-
	2000	MBh	56.6	58.7	64.3	-	55.3	57.3	62.8	-	54.0	55.9	61.3	-	52.7	54.6	59.8	-	50.0	51.8	56.8	-	46.3	48.0	52.6	-
		S/T	0.69	0.58	0.40	-	0.72	0.60	0.42	-	0.74	0.62	0.43	-	0.76	0.64	0.44	-	0.79	0.66	0.46	-	0.80	0.67	0.46	-
		ΔT	18	16	12	-	18	16	12	-	18	16	12	-	18	16	12	-	18	16	12	-	17	15	11	-
		kW	3.94	4.02	4.15	-	4.24	4.33	4.47	-	4.50	4.60	4.75	-	4.73	4.84	4.99	-	4.93	5.04	5.20	-	5.10	5.21	5.38	-
		Amps	12.4	12.6	12.9	-	13.2	13.4	13.8	-	14.1	14.4	14.8	-	14.9	15.2	15.6	-	15.7	16.0	16.5	-	16.5	16.8	17.3	-
		HI PR	241	260	274	-	271	291	308	-	308	331	350	-	351	377	398	-	394	424	448	-	436	469	495	-
		LO PR	106	113	123	-	112	119	130	-	116	124	135	-	122	130	142	-	128	136	149	-	133	141	154	-
	1750	MBh	52.2	54.2	59.3	-	51.0	52.9	58.0	-	49.8	51.6	56.6	-	48.6	50.4	55.2	-	46.2	47.9	52.4	-	42.8	44.3	48.6	-
		S/T	0.67	0.56	0.39	-	0.69	0.58	0.40	-	0.71	0.59	0.41	-	0.73	0.61	0.42	-	0.76	0.64	0.44	-	0.77	0.64	0.44	-
		ΔT	18	16	12	-	19	16	12	-	19	16	12	-	19	16	12	-	18	16	12	-	17	15	11	-
		kW	3.85	3.93	4.05	-	4.14	4.23	4.36	-	4.39	4.49	4.63	-	4.62	4.72	4.87	-	4.81	4.91	5.07	-	4.97	5.08	5.25	-
		Amps	12.1	12.3	12.6	-	12.9	13.1	13.5	-	13.8	14.0	14.4	-	14.5	14.8	15.3	-	15.3	15.6	16.1	-	16.1	16.4	16.9	-
		HI PR	234	252	266	-	263	283	298	-	299	321	339	-	340	366	386	-	383	412	435	-	423	455	480	-
		LO PR	103	109	120	-	109	116	126	-	113	120	131	-	119	126	138	-	124	132	144	-	129	137	149	-
75	2250	MBh	59.3	61.0	66.1	70.9	57.9	59.6	64.5	69.3	56.5	58.2	63.0	67.6	55.2	56.8	61.5	66.0	52.4	53.9	58.4	62.7	48.5	50.0	54.1	58.1
		S/T	0.83	0.74	0.56	0.36	0.86	0.77	0.58	0.37	0.88	0.79	0.60	0.38	0.91	0.81	0.61	0.40	0.94	0.84	0.64	0.41	0.95	0.85	0.64	0.41
		ΔT	20	18	15	10	20	19	15	11	20	19	15	11	20	19	15	11	20	19	15	11	19	17	14	10
		kW	4.01	4.09	4.22	4.35	4.31	4.40	4.54	4.68	4.58	4.67	4.82	4.98	4.81	4.92	5.08	5.24	5.01	5.12	5.29	5.47	5.18	5.30	5.47	5.66
		Amps	12.5	12.8	13.1	13.5	13.4	13.6	14.0	14.4	14.3	14.6	15.0	15.5	15.1	15.4	15.9	16.4	15.9	16.3	16.7	17.3	16.7	17.1	17.6	18.2
		HI PR	246	265	280	292	276	297	314	327	314	338	357	372	358	385	406	424	402	433	457	477	445	478	505	527
		LO PR	108	115	126	134	114	122	133	141	119	126	138	147	125	133	145	154	131	139	152	162	135	144	157	167
	2000	MBh	57.6	59.3	64.2	68.9	56.2	57.9	62.7	67.3	54.9	56.5	61.2	65.7	53.6	**55.1**	59.7	64.1	50.9	52.4	56.7	60.8	47.1	48.5	52.5	56.4
		S/T	0.79	0.71	0.53	0.34	0.82	0.73	0.55	0.36	0.84	0.75	0.57	0.37	0.87	**0.77**	0.59	0.38	0.90	0.80	0.61	0.39	0.91	0.81	0.61	0.39
		ΔT	21	19	16	11	21	19	16	11	21	19	16	11	21	**20**	16	11	21	19	16	11	20	18	15	10
		kW	3.97	4.06	4.18	4.31	4.27	4.36	4.50	4.65	4.54	4.64	4.78	4.94	4.77	**4.88**	5.03	5.20	4.97	5.08	5.25	5.42	5.14	5.26	5.43	5.61
		Amps	12.4	12.7	13.0	13.4	13.3	13.5	13.9	14.3	14.2	14.5	14.9	15.4	15.0	**15.3**	15.7	16.3	15.8	16.1	16.6	17.2	16.6	17.0	17.5	18.0
		HI PR	244	262	277	289	273	294	311	324	311	335	353	369	354	**381**	402	420	398	429	453	472	440	474	500	522
		LO PR	107	114	124	133	113	120	131	140	118	125	137	146	124	**131**	144	153	130	138	150	160	134	143	156	166
	1750	MBh	53.1	54.7	59.2	63.6	51.9	53.4	57.8	62.1	50.7	52.2	56.5	60.6	49.4	50.9	55.1	59.1	47.0	48.3	52.3	56.2	43.5	44.8	48.5	52.0
		S/T	0.76	0.68	0.52	0.33	0.79	0.71	0.53	0.34	0.81	0.72	0.55	0.35	0.83	0.75	0.57	0.36	0.87	0.77	0.59	0.38	0.87	0.78	0.59	0.38
		ΔT	21	20	16	11	22	20	16	11	22	20	16	11	22	20	16	11	21	20	16	11	20	18	15	10
		kW	3.88	3.96	4.08	4.21	4.17	4.26	4.39	4.53	4.43	4.52	4.67	4.82	4.66	4.76	4.91	5.07	4.85	4.95	5.11	5.28	5.01	5.12	5.29	5.47
		Amps	12.2	12.4	12.7	13.1	13.0	13.2	13.6	14.0	13.9	14.1	14.5	15.0	14.7	15.0	15.4	15.9	15.4	15.8	16.2	16.7	16.2	16.6	17.0	17.6
		HI PR	236	254	269	280	265	285	301	314	302	325	343	357	344	370	390	407	386	416	439	458	427	460	485	506
		LO PR	104	111	121	129	110	117	128	136	114	121	133	141	120	128	139	148	126	134	146	155	130	138	151	161

IDB = Entering Indoor Dry Bulb Temperature
High and low pressures are measured at the liquid and suction service valves.

Shaded area reflects ACCA (TVA) Rating conditions

kW = Total system power
Amps = outdoor unit amps (comp.+fan)

Expanded Cooling Data — CPG060B (cont.)

			Outdoor Ambient Temperature																							
			65				75				85				95				105				115			
			Entering Indoor Wet Bulb Temperature																							
IDB	Airflow		59	63	67	71	59	63	67	71	59	63	67	71	59	63	67	71	59	63	67	71	59	63	67	71
80	2250	MBh	60.3	61.7	65.9	70.4	58.9	60.2	64.3	68.8	57.5	58.8	62.8	67.2	56.1	57.4	61.3	65.5	53.3	54.5	58.2	62.2	49.4	50.5	53.9	57.7
		S/T	0.91	0.85	0.69	0.52	0.94	0.88	0.72	0.54	0.96	0.90	0.74	0.55	1.00	0.93	0.76	0.57	1.00	0.97	0.79	0.59	1.00	1.00	0.80	0.59
		ΔT	22	21	19	15	23	22	19	15	23	22	19	15	23	22	19	15	22	22	19	15	20	21	18	14
		kW	4.04	4.12	4.25	4.38	4.34	4.43	4.58	4.72	4.61	4.71	4.86	5.02	4.85	4.96	5.12	5.29	5.05	5.16	5.33	5.51	5.23	5.34	5.52	5.71
		Amps	12.6	12.9	13.2	13.6	13.5	13.7	14.1	14.5	14.4	14.7	15.1	15.6	15.2	15.6	16.0	16.5	16.1	16.4	16.9	17.4	16.9	17.2	17.7	18.3
		HI PR	249	267	282	295	279	300	317	331	317	341	360	376	361	389	411	428	406	437	462	482	449	483	510	532
		LO PR	109	116	127	135	116	123	134	143	120	128	139	148	126	134	146	156	132	141	153	163	137	145	159	169
	2000	MBh	58.6	59.9	64.0	68.4	57.2	58.5	62.5	66.8	55.9	57.1	61.0	65.2	54.5	55.7	**59.5**	63.6	51.8	52.9	56.5	60.4	48.0	49.0	52.4	56.0
		S/T	0.87	0.81	0.66	0.49	0.90	0.84	0.68	0.51	0.92	0.86	0.70	0.52	0.95	0.89	**0.72**	0.54	0.99	0.92	0.75	0.56	0.99	0.93	0.76	0.57
		ΔT	23	22	19	16	24	23	20	16	24	23	20	16	24	23	**20**	16	23	22	20	16	22	21	18	15
		kW	4.01	4.09	4.22	4.35	4.31	4.40	4.54	4.69	4.58	4.67	4.82	4.98	4.81	4.92	**5.08**	5.24	5.01	5.12	5.29	5.47	5.19	5.30	5.47	5.66
		Amps	12.5	12.8	13.1	13.5	13.4	13.6	14.0	14.4	14.3	14.6	15.0	15.5	15.1	15.4	**15.9**	16.4	15.9	16.3	16.7	17.3	16.8	17.1	17.6	18.2
		HI PR	246	265	280	292	276	297	314	327	314	338	357	372	358	385	**407**	424	402	433	457	477	445	478	505	527
		LO PR	108	115	126	134	114	122	133	141	119	126	138	147	125	133	**145**	154	131	139	152	162	135	144	157	167
	1750	MBh	54.1	55.3	59.0	63.1	52.8	54.0	57.7	61.6	51.6	52.7	56.3	60.2	50.3	51.4	54.9	58.7	47.8	48.8	52.2	55.8	44.3	45.2	48.3	51.7
		S/T	0.83	0.78	0.64	0.48	0.86	0.81	0.66	0.49	0.89	0.83	0.68	0.51	0.92	0.86	0.70	0.52	0.95	0.89	0.73	0.54	0.96	0.90	0.73	0.55
		ΔT	24	23	20	16	24	23	20	16	24	23	20	16	24	23	20	16	24	23	20	16	22	21	19	15
		kW	3.91	3.99	4.12	4.24	4.21	4.29	4.43	4.57	4.46	4.56	4.71	4.86	4.69	4.80	4.95	5.11	4.89	5.00	5.16	5.33	5.06	5.17	5.34	5.52
		Amps	12.3	12.5	12.8	13.2	13.1	13.3	13.7	14.1	14.0	14.3	14.7	15.1	14.8	15.1	15.5	16.0	15.6	15.9	16.3	16.9	16.4	16.7	17.2	17.7
		HI PR	239	257	271	283	268	288	304	317	305	328	346	361	347	373	394	411	390	420	444	463	431	464	490	511
		LO PR	105	112	122	130	111	118	129	137	115	123	134	143	121	129	141	150	127	135	147	157	131	140	152	162
85	2250	MBh	61.4	62.6	65.6	69.9	60.0	61.1	64.0	68.3	58.5	59.7	62.5	66.7	57.1	58.2	61.0	65.1	54.3	55.3	57.9	61.8	50.3	51.2	53.7	57.2
		S/T	0.95	0.92	0.83	0.67	0.99	0.95	0.86	0.70	1.00	0.98	0.88	0.71	1.00	1.00	0.91	0.74	1.00	1.00	0.94	0.77	1.00	1.00	0.95	0.77
		ΔT	24	23	22	19	24	24	22	19	24	24	22	19	23	24	23	20	22	23	22	19	21	21	21	18
		kW	4.07	4.15	4.28	4.42	4.38	4.47	4.61	4.76	4.65	4.75	4.90	5.06	4.89	5.00	5.16	5.33	5.10	5.21	5.38	5.56	5.27	5.39	5.57	5.75
		Amps	12.7	13.0	13.3	13.7	13.6	13.8	14.2	14.6	14.5	14.8	15.2	15.7	15.4	15.7	16.1	16.6	16.2	16.5	17.0	17.6	17.0	17.4	17.9	18.5
		HI PR	251	270	285	298	282	303	320	334	320	345	364	380	365	393	415	433	411	442	467	487	454	488	515	538
		LO PR	110	117	128	137	117	124	135	144	121	129	141	150	127	135	148	158	133	142	155	165	138	147	160	171
	2000	MBh	59.6	60.8	63.6	67.9	58.2	59.4	62.2	66.3	56.8	57.9	60.7	64.7	55.5	56.5	59.2	63.2	52.7	53.7	56.2	60.0	48.8	49.7	52.1	55.6
		S/T	0.91	0.88	0.79	0.64	0.94	0.91	0.82	0.66	0.96	0.93	0.84	0.68	1.00	0.96	0.87	0.70	1.00	1.00	0.90	0.73	1.00	1.00	0.91	0.74
		ΔT	25	24	23	20	25	25	23	20	25	25	23	20	25	25	24	20	24	25	23	20	22	23	22	19
		kW	4.04	4.12	4.25	4.38	4.34	4.43	4.58	4.72	4.61	4.71	4.86	5.02	4.85	4.96	5.12	5.29	5.05	5.16	5.33	5.51	5.23	5.34	5.52	5.71
		Amps	12.6	12.9	13.2	13.6	13.5	13.7	14.1	14.5	14.4	14.7	15.1	15.6	15.2	15.6	16.0	16.5	16.1	16.4	16.9	17.4	16.9	17.2	17.7	18.3
		HI PR	249	267	282	295	279	300	317	331	317	341	360	376	361	389	411	428	406	437	462	482	449	483	510	532
		LO PR	109	116	127	135	116	123	134	143	120	128	139	148	126	134	146	156	132	141	153	163	137	145	159	169
	1750	MBh	55.0	56.1	58.7	62.7	53.7	54.8	57.4	61.2	52.5	53.5	56.0	59.8	51.2	52.2	54.6	58.3	48.6	49.6	51.9	55.4	45.0	45.9	48.1	51.3
		S/T	0.87	0.84	0.76	0.62	0.91	0.87	0.79	0.64	0.93	0.90	0.81	0.66	0.96	0.93	0.84	0.68	1.00	0.96	0.87	0.70	1.00	0.97	0.87	0.71
		ΔT	25	25	24	20	26	25	24	21	26	25	24	21	26	25	24	21	25	25	24	20	24	23	22	19
		kW	3.94	4.02	4.15	4.28	4.24	4.33	4.46	4.61	4.50	4.60	4.74	4.90	4.73	4.83	4.99	5.16	4.93	5.04	5.20	5.37	5.10	5.21	5.38	5.56
		Amps	12.3	12.6	12.9	13.3	13.2	13.4	13.8	14.2	14.1	14.4	14.8	15.2	14.9	15.2	15.6	16.1	15.7	16.0	16.5	17.0	16.5	16.8	17.3	17.9
		HI PR	241	259	274	286	271	291	307	321	308	331	350	365	350	377	398	415	394	424	448	467	436	469	495	516
		LO PR	106	113	123	131	112	119	130	139	116	124	135	144	122	130	142	151	128	136	149	159	133	141	154	164

IDB = Entering Indoor Dry Bulb Temperature
High and low pressures are measured at the liquid and suction service valves.

Shaded area reflects AHRI (TVA) Rating conditions

kW = Total system power
Amps = outdoor unit amps (comp.+fan)

Expanded Cooling Data — CPG072B

			Outdoor Ambient Temperature																							
			65				75				85				95				105				115			
			Entering Indoor Wet Bulb Temperature																							
IDB	Airflow		59	63	67	71	59	63	67	71	59	63	67	71	59	63	67	71	59	63	67	71	59	63	67	71
70	2400	MBh	68.6	71.1	77.9	-	67.0	69.4	76.0	-	65.4	67.8	74.2	-	63.8	66.1	72.4	-	60.6	62.8	68.8	-	56.1	58.2	63.7	-
		S/T	0.68	0.57	0.40	-	0.71	0.59	0.41	-	0.73	0.61	0.42	-	0.75	0.63	0.43	-	0.78	0.65	0.45	-	0.78	0.65	0.45	-
		ΔT	18	16	12	-	18	16	12	-	18	16	12	-	18	16	12	-	18	16	12	-	17	15	11	-
		kW	5.08	5.18	5.33	-	5.44	5.54	5.71	-	5.75	5.86	6.04	-	6.02	6.15	6.33	-	6.26	6.39	6.58	-	6.46	6.59	6.80	-
		HI PR	237	255	270	-	266	286	302	-	303	326	344	-	345	371	392	-	388	417	441	-	429	461	487	-
		LO PR	107	114	124	-	113	120	131	-	117	125	136	-	123	131	143	-	129	137	150	-	134	142	155	-
	2150	MBh	67.5	70.0	76.7	-	66.0	68.4	74.9	-	64.4	66.8	73.1	-	62.8	65.1	71.4	-	59.7	61.9	67.8	-	55.3	57.3	62.8	-
		S/T	0.65	0.55	0.38	-	0.68	0.57	0.39	-	0.69	0.58	0.40	-	0.72	0.60	0.42	-	0.74	0.62	0.43	-	0.75	0.63	0.43	-
		ΔT	19	16	12	-	19	17	13	-	19	17	13	-	19	17	13	-	19	16	12	-	18	15	12	-
		kW	5.06	5.16	5.30	-	5.41	5.52	5.68	-	5.72	5.83	6.01	-	5.99	6.11	6.30	-	6.22	6.35	6.54	-	6.42	6.56	6.76	-
		HI PR	236	253	268	-	264	284	300	-	301	323	342	-	342	368	389	-	385	414	438	-	426	458	484	-
		LO PR	106	113	123	-	112	119	130	-	116	124	135	-	122	130	142	-	128	136	149	-	133	141	154	-
	1875	MBh	62.3	64.6	70.8	-	60.9	63.1	69.2	-	59.4	61.6	67.5	-	58.0	60.1	65.9	-	55.1	57.1	62.6	-	51.0	52.9	58.0	-
		S/T	0.63	0.53	0.36	-	0.65	0.55	0.38	-	0.67	0.56	0.39	-	0.69	0.58	0.40	-	0.72	0.60	0.42	-	0.72	0.60	0.42	-
		ΔT	19	17	13	-	20	17	13	-	20	17	13	-	20	17	13	-	19	17	13	-	18	16	12	-
		kW	4.95	5.04	5.19	-	5.29	5.39	5.55	-	5.59	5.70	5.87	-	5.85	5.97	6.15	-	6.08	6.20	6.39	-	6.27	6.40	6.60	-
		HI PR	228	246	260	-	256	276	291	-	292	314	331	-	332	357	377	-	374	402	425	-	413	444	469	-
		LO PR	103	109	120	-	109	116	126	-	113	120	131	-	119	126	138	-	124	132	144	-	129	137	149	-
75	2400	MBh	69.7	71.8	77.7	83.4	68.1	70.1	75.9	81.5	66.5	68.4	74.1	79.5	64.9	66.8	72.3	77.6	61.6	63.4	68.7	73.7	57.1	58.8	63.6	68.3
		S/T	0.78	0.69	0.53	0.34	0.80	0.72	0.54	0.35	0.82	0.74	0.56	0.36	0.85	0.76	0.58	0.37	0.88	0.79	0.60	0.38	0.89	0.80	0.60	0.39
		ΔT	21	19	16	11	21	19	16	11	21	19	16	11	21	19	16	11	21	19	16	11	19	18	15	10
		kW	5.12	5.22	5.37	5.53	5.48	5.59	5.75	5.92	5.79	5.91	6.08	6.27	6.07	6.19	6.38	6.58	6.31	6.44	6.63	6.84	6.51	6.64	6.85	7.07
		HI PR	240	258	272	284	269	289	306	319	306	329	347	362	348	375	396	413	392	422	445	464	433	466	492	513
		LO PR	108	115	125	133	114	121	132	141	118	126	138	147	124	132	145	154	130	139	151	161	135	144	157	167
	2150	MBh	68.7	70.7	76.6	82.2	67.1	69.1	74.8	80.3	65.5	67.4	73.0	78.3	63.9	**65.8**	71.2	76.4	60.7	62.5	67.7	72.6	56.2	57.9	62.7	67.3
		S/T	0.74	0.66	0.50	0.32	0.77	0.69	0.52	0.34	0.79	0.71	0.53	0.34	0.82	**0.73**	0.55	0.36	0.85	0.76	0.57	0.37	0.85	0.76	0.58	0.37
		ΔT	22	20	16	11	22	20	17	12	22	20	17	12	22	**21**	17	12	22	20	17	11	21	19	15	11
		kW	5.10	5.19	5.34	5.50	5.45	5.56	5.72	5.89	5.76	5.88	6.05	6.24	6.04	**6.16**	6.35	6.54	6.27	6.40	6.60	6.80	6.47	6.61	6.81	7.03
		HI PR	238	256	270	282	267	287	303	316	304	327	345	360	346	**372**	393	410	389	419	442	461	430	463	489	510
		LO PR	107	114	124	133	113	120	131	140	118	125	137	146	124	**131**	144	153	130	138	150	160	134	143	156	166
	1875	MBh	63.4	65.3	70.7	75.8	61.9	63.8	69.0	74.1	60.5	62.2	67.4	72.3	59.0	60.7	65.7	70.5	56.0	57.7	62.4	67.0	51.9	53.4	57.8	62.1
		S/T	0.72	0.64	0.49	0.31	0.74	0.66	0.50	0.32	0.76	0.68	0.52	0.33	0.79	0.70	0.53	0.34	0.82	0.73	0.55	0.36	0.82	0.74	0.56	0.36
		ΔT	22	21	17	12	23	21	17	12	23	21	17	12	23	21	17	12	22	21	17	12	21	19	16	11
		kW	4.99	5.08	5.22	5.38	5.33	5.43	5.59	5.76	5.63	5.74	5.91	6.09	5.90	6.02	6.20	6.39	6.13	6.25	6.44	6.64	6.32	6.45	6.65	6.86
		HI PR	231	248	262	274	259	279	294	307	295	317	335	349	335	361	381	398	377	406	429	447	417	449	474	494
		LO PR	104	111	121	129	110	117	128	136	114	121	133	141	120	128	139	148	126	134	146	155	130	138	151	161

IDB = Entering Indoor Dry Bulb Temperature
High and low pressures are measured at the liquid and suction service valves.

Shaded area reflects ACCA (TVA) Rating conditions

kW = Total system power
Amps = outdoor unit amps (comp.+fan)

Expanded Cooling Data — CPG072B (cont.)

			Outdoor Ambient Temperature																							
			65				75				85				95				105				115			
			Entering Indoor Wet Bulb Temperature																							
IDB	Airflow		59	63	67	71	59	63	67	71	59	63	67	71	59	63	67	71	59	63	67	71	59	63	67	71
80	2400	MBh	71.0	72.5	77.5	82.8	69.3	70.8	75.7	80.9	67.7	69.1	73.9	79.0	66.0	67.5	72.1	77.0	62.7	64.1	68.5	73.2	58.1	59.4	63.4	67.8
		S/T	0.85	0.80	0.65	0.49	0.88	0.83	0.67	0.50	0.90	0.85	0.69	0.52	0.93	0.88	0.71	0.53	0.97	0.91	0.74	0.55	0.98	0.92	0.75	0.56
		ΔT	23	22	19	15	23	22	20	16	23	22	20	16	24	23	20	16	23	22	19	16	22	21	18	14
		kW	5.16	5.26	5.41	5.57	5.52	5.63	5.79	5.97	5.84	5.95	6.13	6.32	6.12	6.24	6.43	6.63	6.36	6.49	6.69	6.90	6.56	6.70	6.90	7.12
		HI PR	242	260	275	287	272	292	309	322	309	332	351	366	352	379	400	417	396	426	450	469	437	471	497	518
		LO PR	109	116	127	135	115	123	134	142	120	127	139	148	126	134	146	156	132	140	153	163	136	145	158	169
	2150	MBh	69.9	71.4	76.3	81.6	68.3	69.8	74.6	79.7	66.7	68.1	72.8	77.8	65.0	66.5	**71.0**	75.9	61.8	63.1	67.5	72.1	57.2	58.5	62.5	66.8
		S/T	0.82	0.76	0.62	0.47	0.84	0.79	0.64	0.48	0.87	0.81	0.66	0.49	0.89	0.84	**0.68**	0.51	0.93	0.87	0.71	0.53	0.94	0.88	0.71	0.53
		ΔT	24	23	20	16	25	24	21	16	25	24	21	16	25	24	**21**	17	25	24	20	16	23	22	19	15
		kW	5.13	5.23	5.38	5.54	5.49	5.60	5.76	5.94	5.81	5.92	6.10	6.29	6.08	6.21	**6.40**	6.59	6.32	6.45	6.65	6.86	6.53	6.66	6.87	7.08
		HI PR	240	259	273	285	270	290	306	320	307	330	349	364	349	376	**397**	414	393	423	447	466	434	467	493	515
		LO PR	108	115	126	134	114	122	133	141	119	126	138	147	125	133	**145**	154	131	139	152	162	135	144	157	167
	1875	MBh	64.5	65.9	70.4	75.3	63.0	64.4	68.8	73.6	61.5	62.9	67.2	71.8	60.0	61.3	65.5	70.1	57.0	58.3	62.3	66.6	52.8	54.0	57.7	61.6
		S/T	0.79	0.74	0.60	0.45	0.81	0.76	0.62	0.46	0.84	0.78	0.64	0.48	0.86	0.81	0.66	0.49	0.90	0.84	0.68	0.51	0.90	0.85	0.69	0.51
		ΔT	25	24	21	17	25	24	21	17	25	24	21	17	25	24	21	17	25	24	21	17	23	22	19	16
		kW	5.02	5.12	5.26	5.42	5.37	5.47	5.63	5.80	5.67	5.79	5.96	6.14	5.95	6.07	6.25	6.44	6.17	6.30	6.49	6.69	6.37	6.50	6.70	6.91
		HI PR	233	251	265	276	262	282	297	310	298	320	338	353	339	365	385	402	381	410	433	452	421	453	479	499
		LO PR	105	112	122	130	111	118	129	137	115	123	134	143	121	129	141	150	127	135	147	157	131	140	152	162
85	2400	MBh	72.2	73.6	77.1	82.2	70.5	71.9	75.3	80.3	68.8	70.2	73.5	78.4	67.2	68.5	71.7	76.5	63.8	65.0	68.1	72.7	59.1	60.2	63.1	67.3
		S/T	0.89	0.86	0.78	0.63	0.93	0.89	0.81	0.65	0.95	0.92	0.83	0.67	0.98	0.94	0.85	0.69	1.00	0.98	0.88	0.72	1.00	0.99	0.89	0.72
		ΔT	25	24	23	20	25	25	23	20	25	25	23	20	25	25	23	20	24	24	23	20	23	23	22	19
		kW	5.20	5.30	5.45	5.61	5.56	5.67	5.84	6.01	5.88	6.00	6.18	6.37	6.16	6.29	6.48	6.68	6.40	6.54	6.74	6.95	6.61	6.75	6.96	7.18
		HI PR	244	263	278	290	274	295	312	325	312	336	355	370	355	382	404	421	400	430	454	474	442	475	502	523
		LO PR	110	117	128	136	116	124	135	144	121	129	140	150	127	135	147	157	133	142	155	165	138	146	160	170
	2150	MBh	71.1	72.5	75.9	81.0	69.5	70.8	74.2	79.1	67.8	69.1	72.4	77.3	66.2	67.5	70.6	75.4	62.9	64.1	67.1	71.6	58.2	59.4	62.2	66.3
		S/T	0.85	0.82	0.74	0.60	0.89	0.85	0.77	0.63	0.91	0.88	0.79	0.64	0.94	0.90	0.82	0.66	0.97	0.94	0.85	0.69	0.98	0.95	0.85	0.69
		ΔT	26	26	24	21	26	26	24	21	26	26	24	21	27	26	25	21	26	26	24	21	24	24	23	20
		kW	5.17	5.27	5.42	5.58	5.53	5.64	5.81	5.98	5.85	5.97	6.15	6.33	6.13	6.26	6.45	6.65	6.37	6.50	6.70	6.91	6.58	6.71	6.92	7.14
		HI PR	243	261	276	288	272	293	310	323	310	333	352	367	353	380	401	418	397	427	451	470	439	472	498	520
		LO PR	109	116	127	135	116	123	134	143	120	128	139	148	126	134	146	156	132	141	153	163	137	145	159	169
	1875	MBh	65.7	66.9	70.1	74.8	64.1	65.4	68.5	73.0	62.6	63.8	66.8	71.3	61.1	62.3	65.2	69.6	58.0	59.1	61.9	66.1	53.7	54.8	57.4	61.2
		S/T	0.82	0.80	0.72	0.58	0.85	0.82	0.74	0.60	0.88	0.85	0.76	0.62	0.90	0.87	0.79	0.64	0.94	0.91	0.82	0.66	0.95	0.91	0.82	0.67
		ΔT	27	26	25	21	27	26	25	22	27	26	25	22	27	27	25	22	27	26	25	21	25	25	23	20
		kW	5.06	5.15	5.30	5.46	5.41	5.51	5.67	5.84	5.72	5.83	6.00	6.19	5.99	6.11	6.30	6.49	6.22	6.35	6.54	6.75	6.42	6.55	6.76	6.97
		HI PR	235	253	268	279	264	284	300	313	301	323	341	356	342	368	389	406	385	414	438	456	425	458	483	504
		LO PR	106	113	123	131	112	119	130	139	116	124	135	144	122	130	142	151	128	136	149	159	133	141	154	164

IDB = Entering Indoor Dry Bulb Temperature
High and low pressures are measured at the liquid and suction service valves.

Shaded area reflects AHRI (TVA) Rating conditions

kW = Total system power
Amps = outdoor unit amps (comp.+fan)

Dimensions

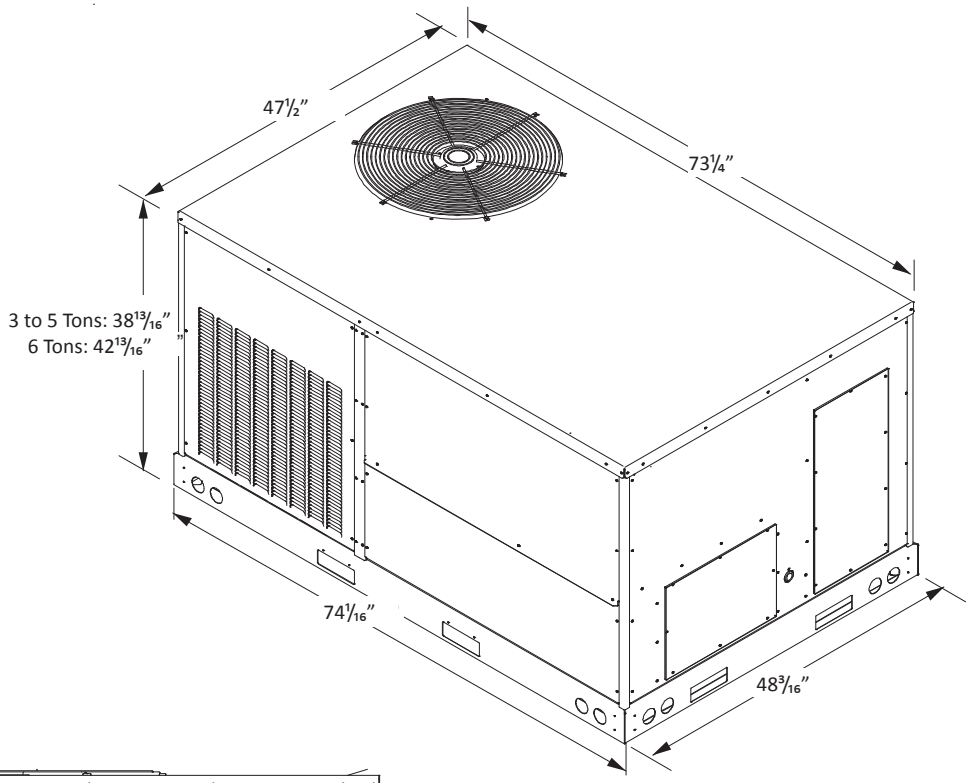

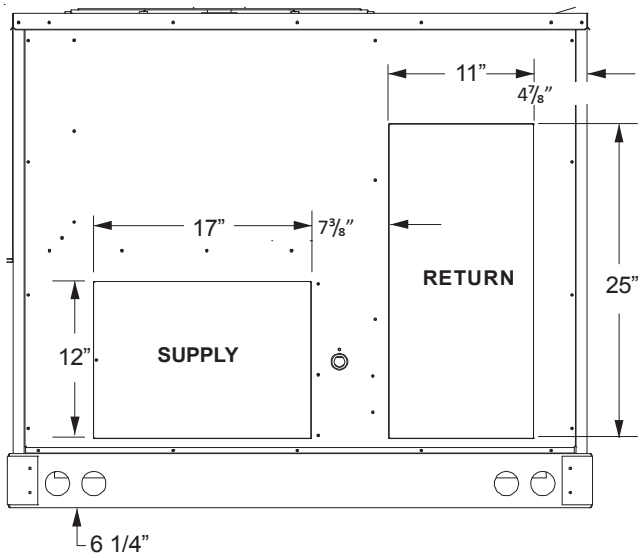

Horizontal Discharge

Unit Clearances

Maintain an adequate clearance around the unit for safety, service, maintenance, and proper unit operation. Leave a total clearance of 75” on the main control panel side of the unit for possible removal of fan shaft, coil, electric heat, and gas furnace. Leave a clearance of 48” on all other sides of the unit for possible compressor removal or service access, and to ensure proper ventilation and condenser airflow. Do not install the unit beneath any obstruction. Install the unit away from all building exhausts to inhibit ingestion of exhaust air into the unit’s fresh-air intake.

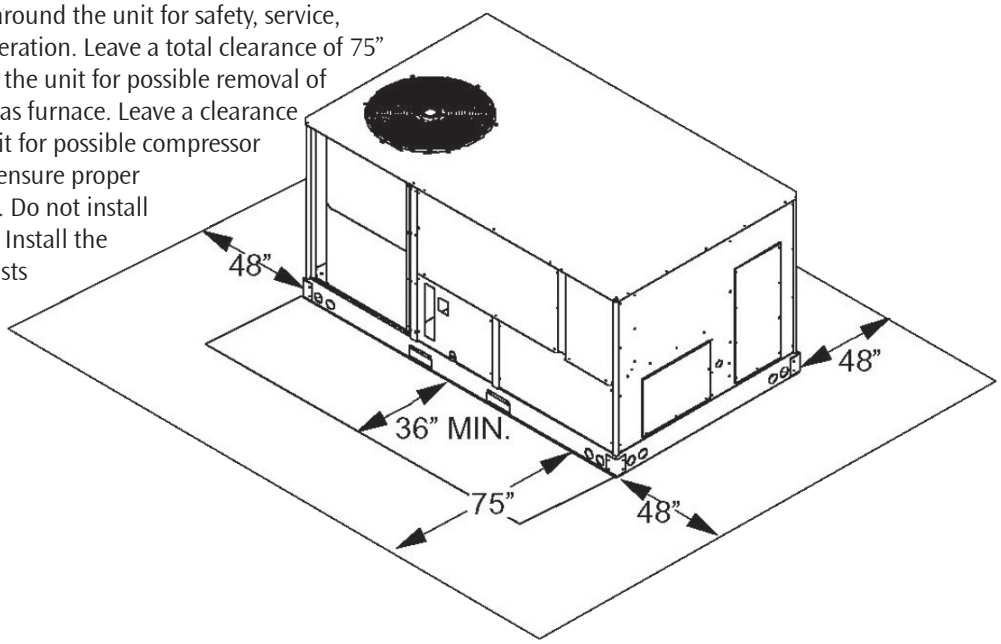

Electrical Entrance Locations

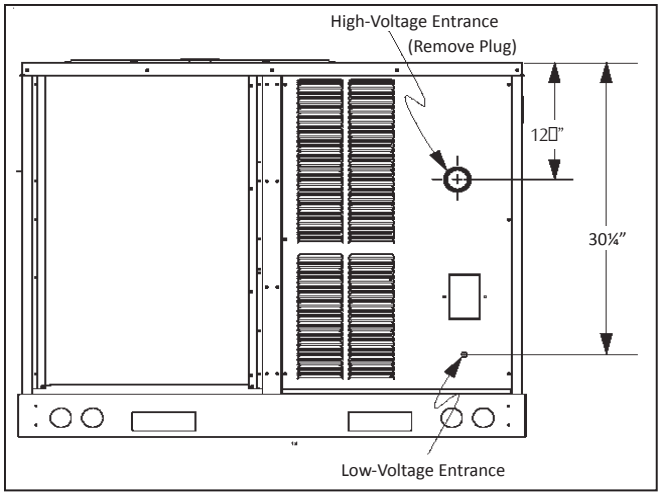

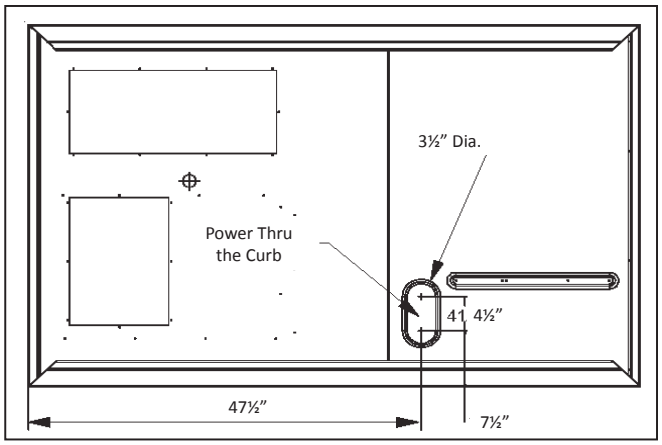

Roof Curb Installation — Rigging

Provisions for forks have been included in the unit base frame. No other fork locations are approved.

- Unit must be lifted by the four lifting holes located at the base frame corners.
- Lifting cables should be attached to the unit with shackles.
- The distance between the crane hook and the top of the unit must not be less than 60”.
- Two spreader bars must span over the unit to prevent damage to the cabinet by the lift cables. Spreader bars must be of sufficient length so that cables do not come in contact with the unit during transport. Remove wood struts mounted beneath unit base frame before setting unit on roof curb. These struts are intended to protect unit base frame from fork lift damage. To remove the struts, extract the sheet metal retainers and pull the struts through the base of the unit. Refer to rigging label on the unit.

Important: If using bottom discharge with roof curb, duct-work should be attached to the curb prior to installing the unit. Duct-work dimensions are shown in Roof Curb Installation Instructions Manual.

Refer to the Roof Curb Installation Instructions for proper curb installation. Curbing must be installed in compliance with the National Roofing Contractors Association Manual.

Lower unit carefully onto roof mounting curb. While rigging the unit, the center of gravity will cause the condenser end to be lower than the supply air end.

Bring condenser end of unit into alignment with the curb. With condenser end of the unit resting on curb member and using curb as a fulcrum, lower opposite end of the unit until entire unit is seated on the curb. When a rectangular cantilever curb is used, take care to center the unit. Check for proper alignment and orientation of supply and return openings with duct.

Corner & Center-of-Gravity Locations

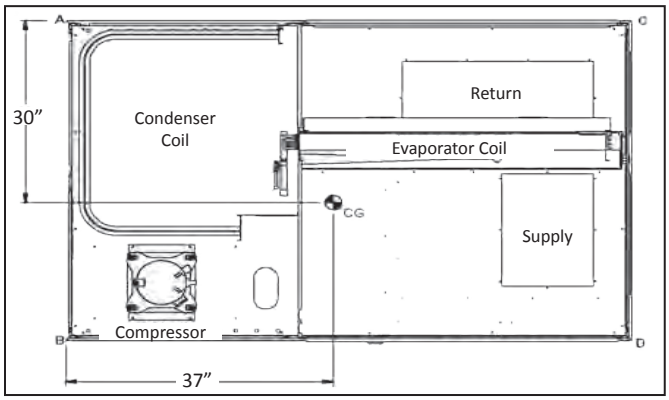

Unit Weights	3-Ton Weights	4-Ton Weights	5-Ton Weights	6-Ton Weights
Corner Weight (A)	100	110	115	130
Corner Weight (B)	170	180	195	215
Corner Weight (C)	105	110	120	130
Corner Weight (D)	170	180	195	215
Unit Shipping Weight	550	595	625	715
Unit Operating Weight	525	570	600	690

Note: Weights are calculated without accessories installed.

Roof Curb Installation (cont.)

Curb installations must comply with local codes and should follow the established guidelines of the National Roofing Contractors Association.

Proper unit installation requires that the roof curb be firmly and permanently attached to the roof structure. Check for adequate fastening method prior to setting the unit on the curb.

Full perimeter roof curbs are available from the factory and are shipped unassembled. The installing contractor is responsible for field assembly, squaring, leveling, and mounting on the roof structure. All required hardware necessary for the assembly of the sheet metal curb is included in the curb accessory package.

- Determine sufficient structural support before locating and mounting the curb and package unit.
- Duct-work must be constructed using industry guidelines. The duct-work must be placed into the roof curb before mounting the package unit. Our full perimeter curbs include duct connection frames to be assembled with the curb. Cantilevered-type curbs are not available from the factory.
- Contractor furnishes curb insulation, cant strips, flashing, and general roofing material.
- Support curbs on parallel sides with roof members. To prevent damage to the unit, the roof members cannot penetrate supply and return duct openings.

Note: The unit and curb accessories are designed to allow vertical duct installation before unit placement. Duct installation after unit placement is not recommended.

See the manual shipped with the roof curb for assembly and installation instructions.

3-D View

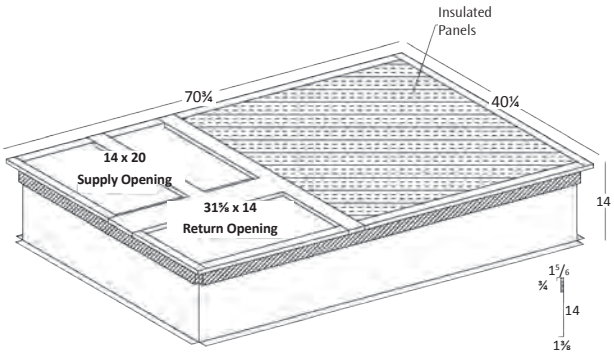

Top View

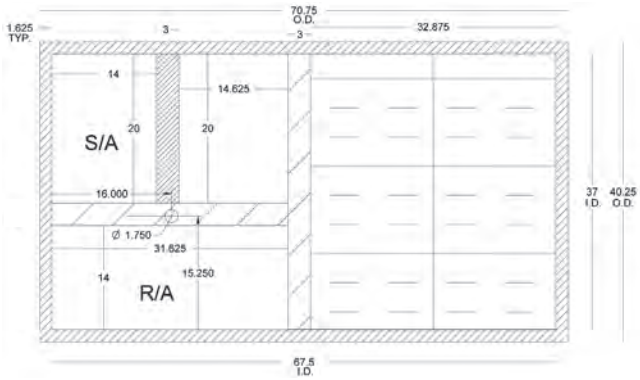

WIRING DIAGRAM — CPG0360451D (SINGLE-PHASE, DIRECT DRIVE)

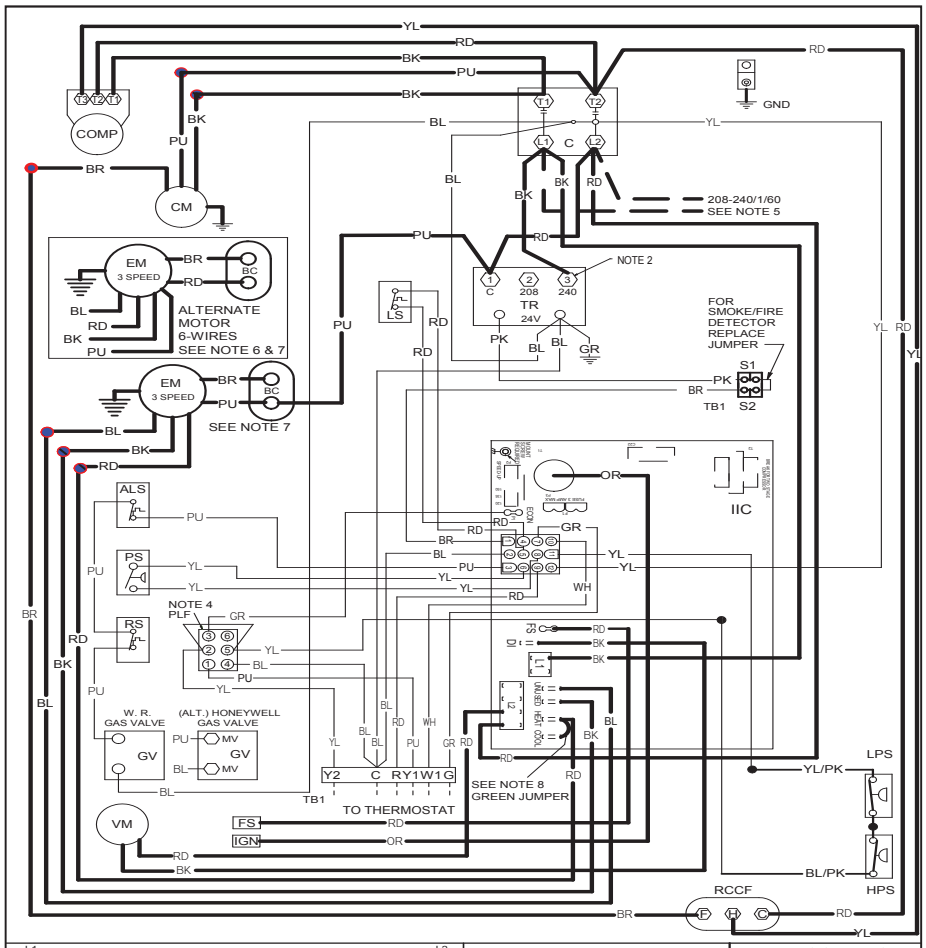

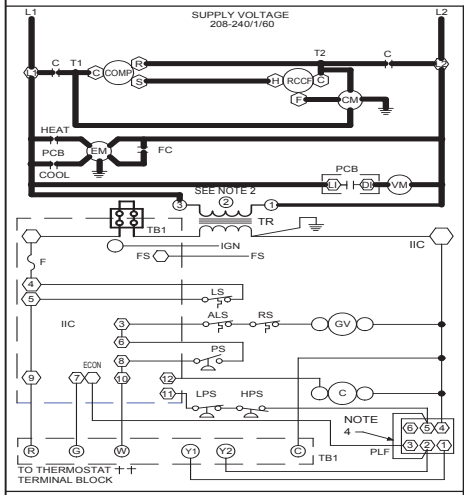

INSTALLER/SERVICEMAN

THE STATUS LIGHT ON THE FURNACE CONTROL MAY BE USED AS A GUIDE TO TROUBLESHOOTING THIS APPLIANCE. STATUS LIGHT CODES ARE AS FOLLOWS:

STATUS LIGHT	EQUIP. STATUS	CHECK
ON	NORMAL OPERATION	—
OFF	NO POWER OR INTERNAL CONTROL FAULT	CHECK INPUT POWER CHECK FUSE ON CONTROL REPLACE CONTROL
1 BLINK	IGNITION FAILURE OR OPEN ROLLOUT SWITCH OR OPEN AUX. LIMIT SWITCH	GAS FLOW GAS PRESSURE GAS VALVE FLAME SENSOR FLAME ROLLOUT BAD SWITCH AUX. LIMIT OPEN
2 BLINKS	PRESSURE SWITCH OPEN	CHECK PRESSURE SWITCH
3 BLINKS	PRESSURE SWITCH CLOSED WITHOUT INDUCER ON	CHECK PRESSURE SWITCH
4 BLINKS	OPEN LIMIT SWITCH	MAIN LIMIT OPEN BAD SWITCH
5 BLINKS	FALSE FLAME SENSED	STICKING GAS VALVE
6 BLINKS	COMPRESSOR OUTPUT DELAY	3 MIN. COMP. ANTI-CYCLE TIMER

COMPONENT LEGEND

ALS	AUXILLARY LIMIT SWITCH
COMP	COMPRESSOR
CM	CONDENSER MOTOR
C	CONTACTOR
EM	EVAPORATOR MOTOR
F	FUSE
FS	FLAME SENSOR
GND	EQUIPMENT GROUND
GV	GAS VALVE
HPS	HIGH PRESSURE SWITCH
IIC	INTEGRATED IGNITION CONTROL
IGN	IGNITOR
LS	LIMIT SWITCH
LPS	LOW PRESSURE SWITCH
PLF	FEMALE PLUG/CONNECTOR
PS	PRESSURE SWITCH
RCCF	RUN CAPACITOR FOR CONDENSER FAN
RS	ROLLOUT SWITCH
TB1	TERMINAL BLOCK (24V SIGNAL)
TR	TRANSFORMER
VM	VENT MOTOR
VMR	VENT MOTOR RELAY
BC	BLOWER CAPACITOR

NOTES

1. REPLACEMENT WIRE MUST BE THE SAME SIZE AND TYPE OF INSULATION AS ORIGINAL. (USE COPPER CONDUCTOR ONLY).
2. FOR 208 VOLT TRANSFORMER OPERATION MOVE BLACK WIRE FROM TERMINAL (3) TO TERMINAL (2) ON TRANSFORMER.
3. FOR DIFFERENT THAN FACTORY SPEED TAP. CHANGE COOLING SPEED AT COOL TERMINAL. CHANGE HEATING SPEED AT HEAT TERMINAL ON CONTROL BOARD
   3 SPEED MOTOR
   RD - LOW SPEED
   BL - MED. SPEED
   BK - HIGH SPEED
4. ACCESSORY ECONOMIZER PLUG ADJACENT TO BLOWER HOUSING IN RETURN AIR COMPARTMENT. REMOVE MALE PLUG AND ATTACH FEMALE PLUG TO ECONOMIZER ACCESSORY.
5. USE COPPER CONDUCTORS ONLY.
   ++ USE NEC CLASS 2 WIRE.
6. PURPLE WIRE CONNECTS TO TRANSFORMER (PIN 1).
7. SPEED TAP TERMINATIONS SHOWN ON DIAGRAM ARE REPRESENTATIVE, BUT ACTUAL FACTORY SETTING MAY BE DIFFERENT BASED ON HEATING VALUE AND CAPACITY OF UNIT.
8. TO RUN DIFFERENT SPEED FOR HEATING AND COOLING, DISCONNECT GEEEN JUMPER FROM "COOL" TERMINAL AND REPLACE WITH APPROPRIATE SPEED TAP. THEN PLACE DISCONNECTED END OF JUMPER ON "UNUSED" TERMINAL LEFT OPEN BY MOVING THE SPEED TAP.

SEE UNIT RATING PLATE FOR TYPE AND SIZE OF OVERCURRENT PROTECTION.

208-240/1/60 0140L00510 REV A

FACTORY WIRING
LINE VOLTAGE
LOW VOLTAGE
OPTIONAL HIGH VOLTAGE

FIELD WIRING
HIGH VOLTAGE
LOW VOLTAGE

WIRE CODE

BK	BLACK
BL	BLUE
BR	BROWN
GR	GREEN
OR	ORANGE
PK	PINK
PU	PURPLE
RD	RED
WH	WHITE
YL	YELLOW
BL/PK	BLUE WITH PINK STRIP
YL/PK	YELLOW WITH PINK STRIP

THERMOSTAT FIELD WIRING ++

NO ECONOMIZER

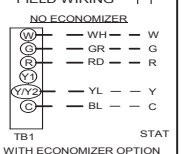

WITH ECONOMIZER OPTION

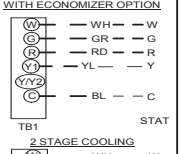

2 STAGE COOLING

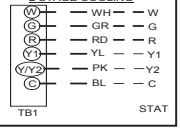

WARNING

High Voltage: Disconnect all power before servicing or installing this unit. Multiple power sources may be present. Failure to do so may cause property damage, personal injury, or death.

Wiring is subject to change. Always refer to the wiring diagram or the unit for the most up-to-date wiring.

WIRING DIAGRAM — CPG036/480901D (SINGLE-PHASE DIRECT DRIVE)

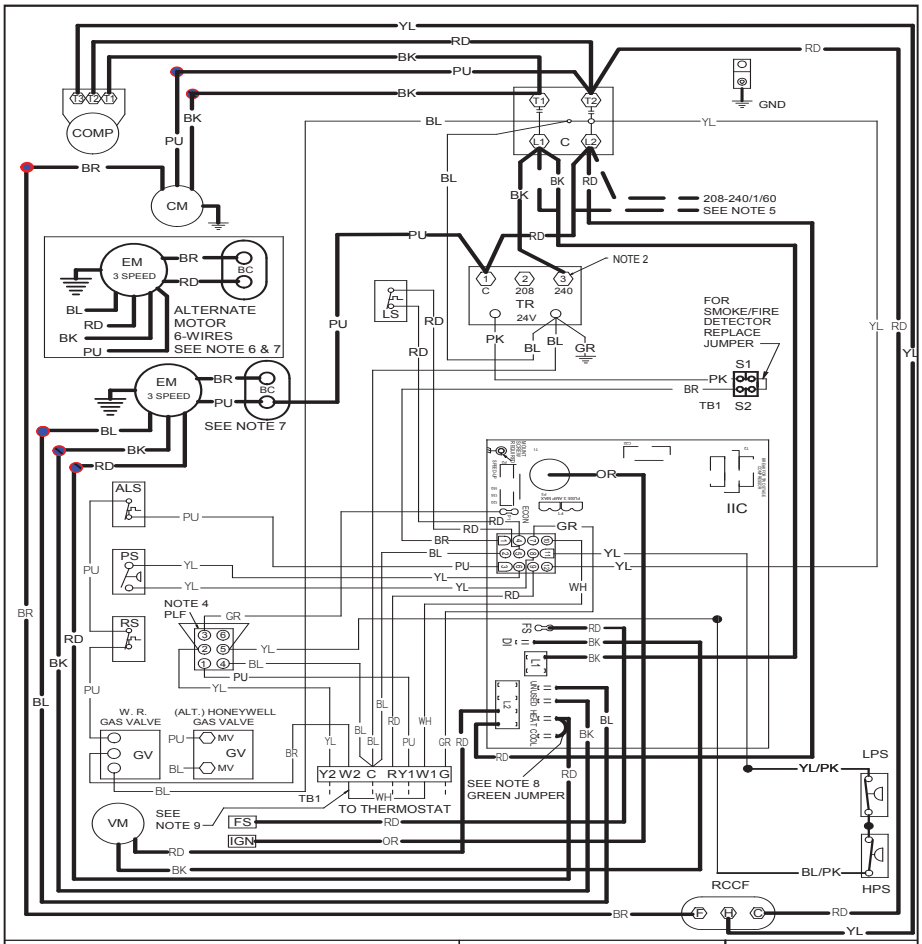

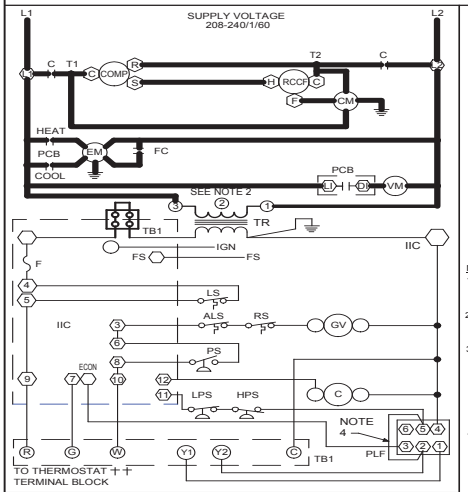

INSTALLER/SERVICEMAN

THE STATUS LIGHT ON THE FURNACE CONTROL MAY BE USED AS A GUIDE TO TROUBLESHOOTING THIS APPLIANCE. STATUS LIGHT CODES ARE AS FOLLOWS:

STATUS LIGHT	EQUIP. STATUS	CHECK
ON	NORMAL OPERATION	
OFF	NO POWER OR INTERNAL CONTROL FAULT	CHECK INPUT POWER CHECK FUSE ON CONTROL REPLACE CONTROL
1 BLINK	IGNITION FAILURE OR OPEN ROLLOUT SWITCH OR OPEN AUX. LIMIT SWITCH	GAS FLOW GAS PRESSURE GAS VALVE FLAME SENSOR FLAME ROLLOUT BAD SWITCH AUX. LIMIT OPEN
2 BLINKS	PRESSURE SWITCH OPEN	CHECK PRESSURE SWITCH
3 BLINKS	PRESSURE SWITCH CLOSED WITHOUT INDUCER ON	CHECK PRESSURE SWITCH
4 BLINKS	OPEN LIMIT SWITCH	MAIN LIMIT OPEN BAD SWITCH
5 BLINKS	FALSE FLAME SENSED	STICKING GAS VALVE
6 BLINKS	COMPRESSOR OUTPUT DELAY	3 MIN. COMP. ANTI-CYCLE TIMER

COMPONENT LEGEND

ALS	AUXILLARY LIMIT SWITCH
COMP	COMPRESSOR
CM	CONDENSER MOTOR
C	CONTACTOR
EM	EVAPORATOR MOTOR
F	FUSE
FS	FLAME SENSOR
GND	EQUIPMENT GROUND
GV	GAS VALVE
HPS	HIGH PRESSURE SWITCH
IIC	INTEGRATED IGNITION CONTROL
IGN	IGNITOR
LS	LIMIT SWITCH
LPS	LOW PRESSURE SWITCH
PLF	FEMALE PLUG/CONNECTOR
RCCF	RUN CAPACITOR FOR CONDENSER FAN
PS	PRESSURE SWITCH
RS	ROLLOUT SWITCH
TB1	TERMINAL BLOCK (24V SIGNAL)
TR	TRANSFORMER
VM	VENT MOTOR
VMR	VENT MOTOR RELAY
BC	BLOWER CAPACITOR

NOTES

1. REPLACEMENT WIRE MUST BE THE SAME SIZE AND TYPE OF INSULATION AS ORIGINAL. (USE COPPER CONDUCTOR ONLY).
2. FOR 208 VOLT TRANSFORMER OPERATION MOVE BLACK WIRE FROM TERMINAL (5) TO TERMINAL (2) ON TRANSFORMER.
3. FOR DIFFERENT THAN FACTORY SPEED TAP. CHANGE COOLING SPEED AT COOL TERMINAL. CHANGE HEATING SPEED AT HEAT TERMINAL ON CONTROL BOARD
   3 SPEED MOTOR
   RD - LOW SPEED
   BL - MED. SPEED
   BK - HIGH SPEED
4. ACCESSORY ECONOMIZER PLUG ADJACENT TO BLOWER HOUSING IN RETURN AIR COMPARTMENT. REMOVE MALE PLUG AND ATTACH FEMALE PLUG TO ECONOMIZER ACCESSORY.
5. USE COPPER CONDUCTORS ONLY. ++ USE NEC CLASS 2 WIRE.
6. PURPLE WIRE CONNECTS TO TRANSFORMER (PIN 1).
7. SPEED TAP TERMINATIONS SHOWN ON DIAGRAM ARE REPRESENTATIVE, BUT ACTUAL FACTORY SETTING MAY BE DIFFERENT BASED ON HEATING VALUE AND CAPACITY OF UNIT.
8. TO RUN DIFFERENT SPEED FOR HEATING AND COOLING, DISCONNECT GEEEN JUMPER FROM "COOL" TERMINAL AND REPLACE WITH APPROPRIATE SPEED TAP. THEN PLACE DISCONNECTED END OF JUMPER ON "UNUSED" TERMINAL LEFT OPEN BY MOVING THE SPEED TAP.
9. FOR LOW STAGE OPERATION ONLY, REMOVE WHITE JUMPER. FOR 2 STAGE OPERATION, REMOVE JUMPER AND CONNECT W2 TO W1 ON THERMOSTAT.

SEE UNIT RATING PLATE FOR TYPE AND SIZE OF OVERCURRENT PROTECTION.

208-240/1/60 0140L00506 REV A

FACTORY WIRING
LINE VOLTAGE
LOW VOLTAGE
OPTIONAL HIGH VOLTAGE

FIELD WIRING
HIGH VOLTAGE
LOW VOLTAGE

WIRE CODE

BK	BLACK
BL	BLUE
BR	BROWN
GR	GREEN
OR	ORANGE
PK	PINK
PU	PURPLE
RD	RED
WH	WHITE
YL	YELLOW
BL/PK	BLUE WITH PINK STRIP
YL/PK	YELLOW WITH PINK STRIP

THERMOSTAT FIELD WIRING ++

NO ECONOMIZER

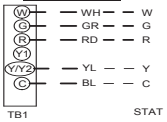

WITH ECONOMIZER OPTION

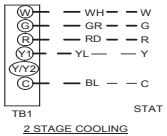

2 STAGE COOLING

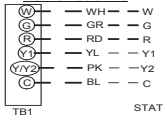

WARNING

High Voltage: Disconnect all power before servicing or installing this unit. Multiple power sources may be present. Failure to do so may cause property damage, personal injury, or death.

Wiring is subject to change. Always refer to the wiring diagram or the unit for the most up-to-date wiring.

WIRING DIAGRAM — CPG060*1D (SINGLE-PHASE DIRECT DRIVE)

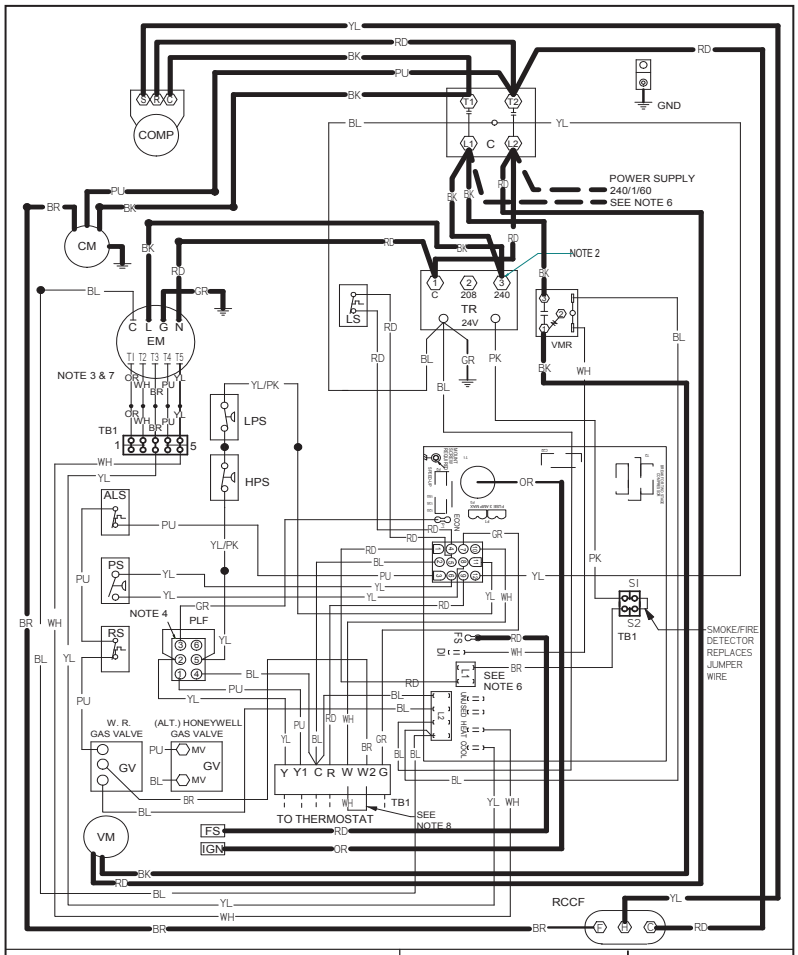

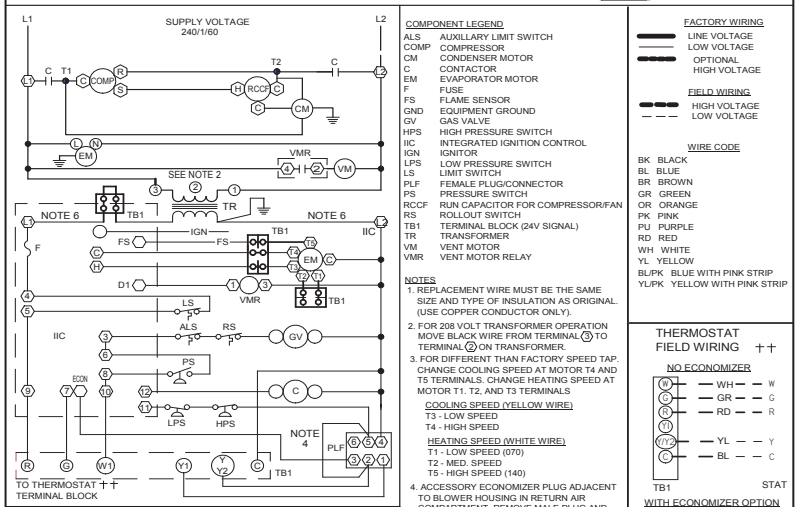

INSTALLER/SERVICEMAN

THE STATUS LIGHT ON THE FURNACE CONTROL MAY BE USED AS A GUIDE TO TROUBLESHOOTING THIS APPLIANCE. STATUS LIGHT CODES ARE AS FOLLOWS:

STATUS LIGHT	EQUIP. STATUS	CHECK
ON	NORMAL OPERATION	
OFF	NO POWER OR INTERNAL CONTROL FAULT	CHECK INPUT POWER CHECK FUSE ON CONTROL REPLACE CONTROL
1 BLINK	IGNITION FAILURE OR OPEN ROLLOUT SWITCH OR OPEN AUX. LIMIT SWITCH	GAS FLOW GAS PRESSURE GAS VALVE FLAME SENSOR FLAME ROLLOUT BAD SWITCH AUX. LIMIT OPEN
2 BLINKS	PRESSURE SWITCH OPEN	CHECK PRESSURE SWITCH
3 BLINKS	PRESSURE SWITCH CLOSED WITHOUT INDUCER ON	CHECK PRESSURE SWITCH
4 BLINKS	OPEN LIMIT SWITCH	MAIN LIMIT OPEN BAD SWITCH
5 BLINKS	FALSE FLAME SENSED	STICKING GAS VALVE
6 BLINKS	COMPRESSOR OUTPUT DELAY	3 MIN. COMP. ANTI-CYCLE TIMER

COMPONENT LEGEND

ALS	AUXILLARY LIMIT SWITCH
COMP	COMPRESSOR
CM	CONDENSER MOTOR
C	CONTACTOR
EM	EVAPORATOR MOTOR
F	FUSE
FS	FLAME SENSOR
GND	EQUIPMENT GROUND
GV	GAS VALVE
HPS	HIGH PRESSURE SWITCH
IIC	INTEGRATED IGNITION CONTROL
IGN	IGNITOR
LPS	LOW PRESSURE SWITCH
LS	LIMIT SWITCH
PLF	FEMALE PLUG/CONNECTOR
PS	PRESSURE SWITCH
RCCF	RUN CAPACITOR FOR COMPRESSOR/FAN
RS	ROLLOUT SWITCH
TB1	TERMINAL BLOCK (24V SIGNAL)
TR	TRANSFORMER
VM	VENT MOTOR
VMR	VENT MOTOR RELAY

NOTES

1. REPLACEMENT WIRE MUST BE THE SAME SIZE AND TYPE OF INSULATION AS ORIGINAL. (USE COPPER CONDUCTOR ONLY).
2. FOR 208 VOLT TRANSFORMER OPERATION MOVE BLACK WIRE FROM TERMINAL (3) TO TERMINAL (2) ON TRANSFORMER.
3. FOR DIFFERENT THAN FACTORY SPEED TAP. CHANGE COOLING SPEED AT MOTOR T4 AND T5 TERMINALS. CHANGE HEATING SPEED AT MOTOR T1, T2, AND T3 TERMINALS

   COOLING SPEED (YELLOW WIRE)
   T3 - LOW SPEED
   T4 - HIGH SPEED

   HEATING SPEED (WHITE WIRE)
   T1 - LOW SPEED (070)
   T2 - MED. SPEED
   T5 - HIGH SPEED (140)
4. ACCESSORY ECONOMIZER PLUG ADJACENT TO BLOWER HOUSING IN RETURN AIR COMPARTMENT. REMOVE MALE PLUG AND ATTACH FEMALE PLUG TO ECONOMIZER ACCESSORY.
5. USE COPPER CONDUCTORS ONLY.
   ++ USE NEC CLASS 2 WIRE.
6. L1 AND L2 ON ICC CONTROL IS 24V INPUT.
7. SPEED TAP TERMINATIONS SHOWN ON DIAGRAM ARE REPRESENTATIVE, BUT ACTUAL FACTORY SETTINGS MAY BE DIFFERENT BASED ON THE HEATING VALUE OF THE UNIT.
8. FOR LOW STAGE OPERATION ONLY, REMOVE WHITE JUMPER. FOR 2 STAGE OPERATION, REMOVE JUMPER AND CONNECT W2 TO W2 ON THERMOSTAT.

SEE UNIT RATING PLATE FOR TYPE AND SIZE OF OVER CURRENT PROTECTION .

240/1/60 0140L00429 REV A

FACTORY WIRING
- LINE VOLTAGE
- LOW VOLTAGE
- OPTIONAL HIGH VOLTAGE

FIELD WIRING
- HIGH VOLTAGE
- LOW VOLTAGE

WIRE CODE

BK	BLACK
BL	BLUE
BR	BROWN
GR	GREEN
OR	ORANGE
PK	PINK
PU	PURPLE
RD	RED
WH	WHITE
YL	YELLOW
BL/PK	BLUE WITH PINK STRIP
YL/PK	YELLOW WITH PINK STRIP

THERMOSTAT FIELD WIRING ++

NO ECONOMIZER

WITH ECONOMIZER OPTION

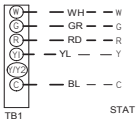

2 STAGE COOLING

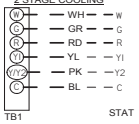

High Voltage: Disconnect all power before servicing or installing this unit. Multiple power sources may be present. Failure to do so may cause property damage, personal injury, or death.

WARNING

Wiring is subject to change. Always refer to the wiring diagram or the unit for the most up-to-date wiring.

WIRING DIAGRAM — CPG060*3D (THREE-PHASE, DIRECT DRIVE)

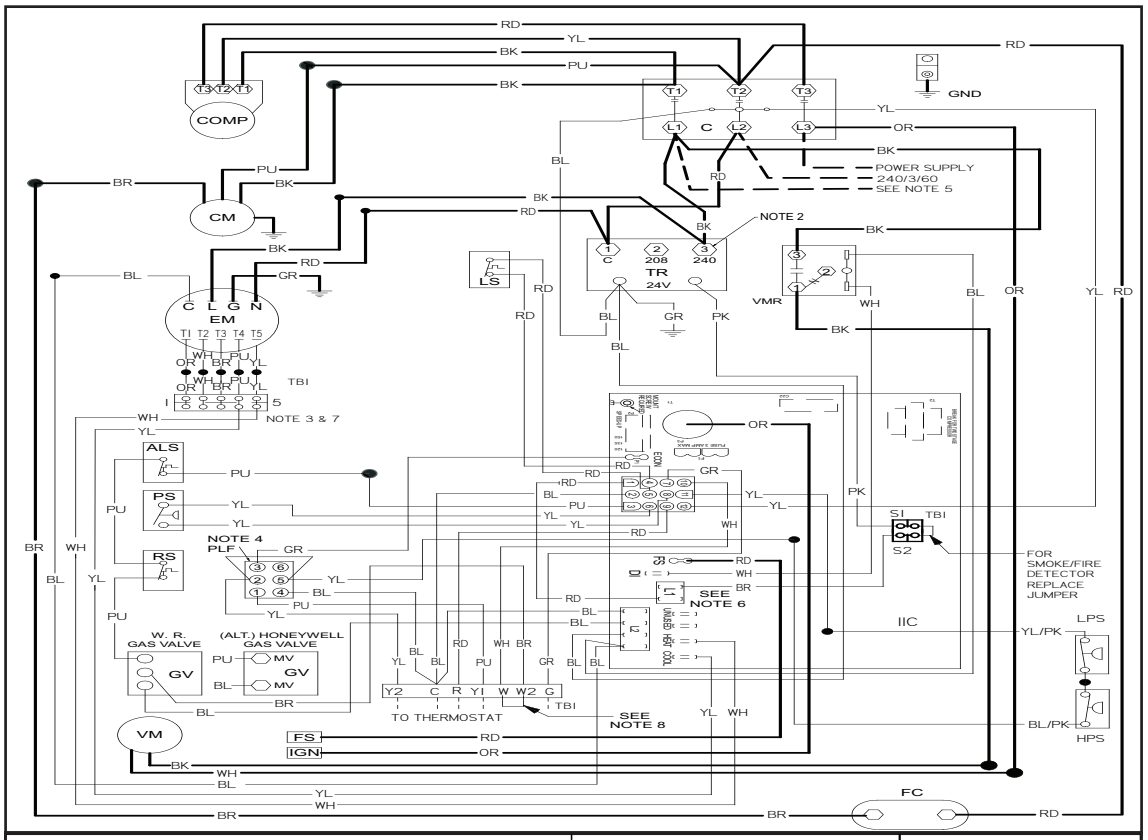

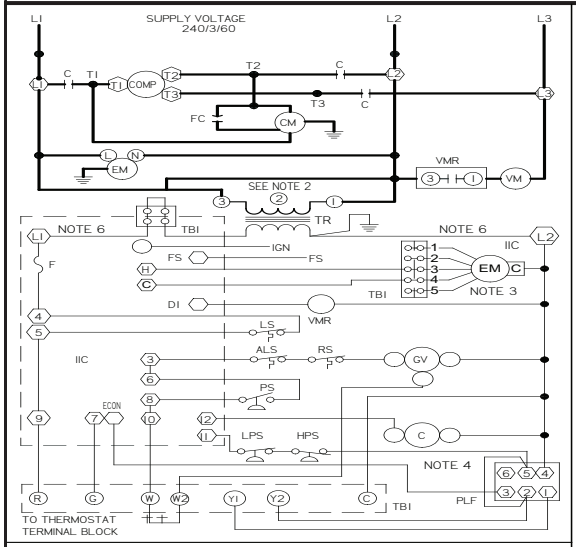

INSTALLER/SERVICEMAN

THE STATUS LIGHT ON THE FURNACE CONTROL MAY BE USED AS A GUIDE TO TROUBLESHOOTING THIS APPLIANCE. STATUS LIGHT CODES ARE AS FOLLOWS.

STATUS LIGHT	EQUIP. STATUS	CHECK
ON	NORMAL OPERATION	–
OFF	NO POWER OR INTERNAL CONTROL FAULT	CHECK INPUT POWER CHECK FUSE ON CONTROL REPLACE CONTROL
1 BLINK	IGNITION FAILURE OR OPEN ROLLOUT SWITCH OR OPEN AUX LIMIT SWITCH	GAS FLOW GAS PRESSURE GAS VALVE FLAME SENSOR FLAME ROLLOUT BAD SWITCH AUX. LIMIT OPEN
2 BLINKS	PRESSURE SWITCH OPEN	CHECK PRESSURE SWITCH
3 BLINKS	PRESSURE SWITCH CLOSED WITHOUT INDUCER ON	CHECK PRESSURE SWITCH
4 BLINKS	OPEN LIMIT SWITCH	MAIN LIMIT OPEN BAD SWITCH
5 BLINKS	FALSE FLAME SENSED	STICKING GAS VALVE
6 BLINKS	COMPRESSOR OUTPUT DELAY	3 MIN. COMP. ANTI-CYCLE TIMER

COMPONENT LEGEND

ALS	AUXILIARY LIMIT SWITCH
COMP	COMPRESSOR
CM	CONDENSER MOTOR
C	CONTACTOR
EM	EVAPORATOR MOTOR
F	FUSE
FC	FAN CAPACITOR
FS	FLAME SENSOR
GND	EQUIPMENT GROUND
GV	GAS VALVE
HPS	HIGH PRESSURE SWITCH
IIC	INTEGRATED IGNITION CONTROL
IGN	IGNITOR
LS	LIMIT SWITCH
LPS	**LOW PRESSURE SWITCH**
PLF	FEMALE PLUG/CONNECTOR
PS	PRESSURE SWITCH
RS	ROLLOUT SWITCH
TBI	TERMINAL BLOCK (24V SIGNAL)
TR	TRANSFORMER
VM	VENT MOTOR
VMR	VENT MOTOR RELAY

NOTES

1. REPLACEMENT WIRE MUST BE THE SAME SIZE AND TYPE OF INSULATION AS ORIGINAL. (USE COPPER CONDUCTOR ONLY).
2. FOR 208 VOLT TRANSFORMER OPERATION MOVE BLACK WIRES FROM TERMINAL (3) TO TERMINAL (2) ON TRANSFORMER.
3. FOR DIFFERENT THAN FACTORY SPEED TAP. CHANGE COOLING SPEED AT MOTOR T3 AND T4 TERMINALS. CHANGE HEATING SPEED AT MOTOR T1. T2, AND T5 TERMINALS.

   COOLING SPEED (YELLOW WIRE)
   T3 – LOW SPEED
   T4 – HIGH SPEED

   HEATING SPEED (WHITE WIRE)
   T1 – LOW SPEED (070)
   T2 – MED. SPEED
   T5 – HIGH SPEED (140)
4. ACCESSORY ECONOMIZER PLUG ADJACENT TO BLOWER HOUSING IN RETURN AIR COMPARTMENT. REMOVE MALE PLUG AND ATTACH FEMALE PLUG TO ECONOMIZER ACCESSORY.
5. USE COPPER CONDUCTORS ONLY. ++ USE NEC CLASS 2 WIRE.
6. L1 AND L2 ON ICC CONTROL IS 24V INPUT.
7. SPEED TAP TERMINATIONS SHOWN ON DIAGRAM ARE REPRESENTATIVE, BUT ACTUAL FACTORY SETTINGS MAY BE DIFFERENT BASED ON THE HEATING VALUE OF THE UNIT.
8. FOR LOW STAGE OPERATION ONLY, REMOVE WHITE JUMPER FOR 2 STAGE OPERATION, REMOVE JUMPER AND CONNECT W2 TO W2 ON THERMOSTAT.

SEE UNIT RATING PLATE FOR TYPE AND SIZE OF OVER CURRENT PROTECTION

230/3/60 0140L00980 REV B

FACTORY WIRING
- LINE VOLTAGE
- LOW VOLTAGE
- OPTIONAL HIGH VOLTAGE

FIELD WIRING
- HIGH VOLTAGE
- LOW VOLTAGE

WIRE CODE

BK	BLACK
BL	BLUE
BR	BROWN
GR	GREEN
OR	ORANGE
PK	PINK
PU	PURPLE
RD	RED
WH	WHITE
YL	YELLOW
BL/PK	BLUE WITH PINK STRIP
YL/PK	YELLOW WITH PINK STRIP

THERMOSTAT FIELD WIRING ++

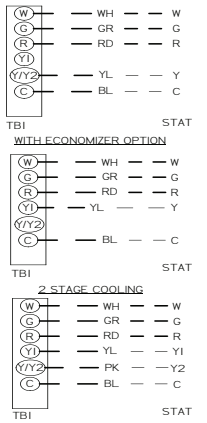

High Voltage: Disconnect all power before servicing or installing this unit. Multiple power sources may be present. Failure to do so may cause property damage, personal injury, or death.

WARNING

Wiring is subject to change. Always refer to the wiring diagram or the unit for the most up-to-date wiring.

WIRING DIAGRAM — CPG036.48*3D (THREE-PHASE DIRECT DRIVE)

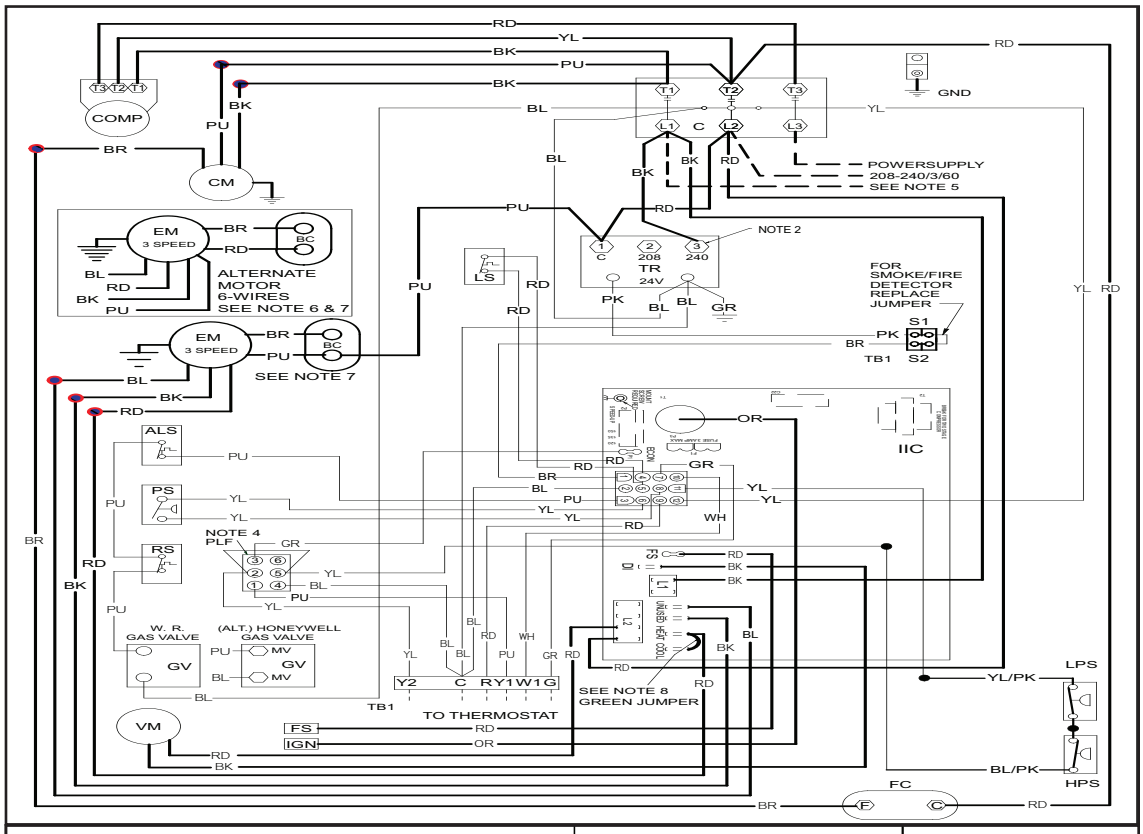

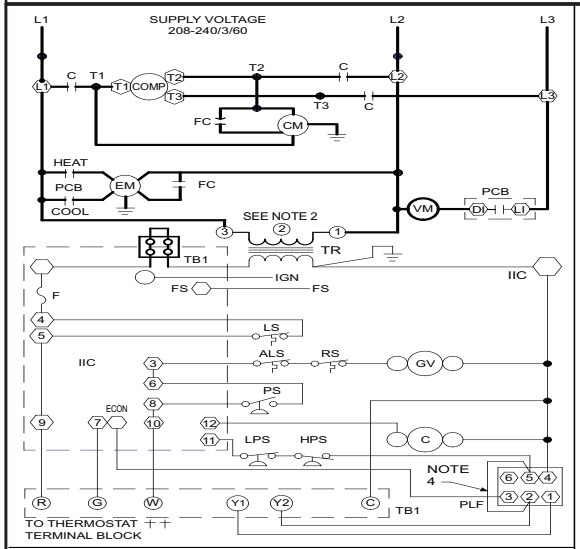

INSTALLER/SERVICEMAN

THE STATUS LIGHT ON THE FURNACE CONTROL MAY BE USED AS A GUIDE TO TROUBLESHOOTING THIS APPLIANCE. STATUS LIGHT CODES ARE AS FOLLOWS:

STATUS LIGHT	EQUIP. STATUS	CHECK
ON	NORMAL OPERATION	-
OFF	NO POWER OR INTERNAL CONTROL FAULT	CHECK INPUT POWER CHECK FUSE ON CONTROL REPLACE CONTROL
1 BLINK	IGNITION FAILURE OR OPEN ROLLOUT SWITCH OR OPEN AUX. LIMIT SWITCH	GAS FLOW GAS PRESSURE GAS VALVE FLAME SENSOR FLAME ROLLOUT BAD SWITCH AUX. LIMIT OPEN
2 BLINKS	PRESSURE SWITCH OPEN	CHECK PRESSURE SWITCH
3 BLINKS	PRESSURE SWITCH CLOSED WITHOUT INDUCER ON	CHECK PRESSURE SWITCH
4 BLINKS	OPEN LIMIT SWITCH	MAIN LIMIT OPEN BAD SWITCH
5 BLINKS	FALSE FLAME SENSED	STICKING GAS VALVE
6 BLINKS	COMPRESSOR OUTPUT DELAY	3 MIN. COMP. ANTI-CYCLE TIMER

COMPONENT LEGEND

ALS	AUXILLARY LIMIT SWITCH
COMP	COMPRESSOR
CM	CONDENSER MOTOR
C	CONTACTOR
EM	EVAPORATOR MOTOR
F	FUSE
FC	FAN CAPACITOR
FS	FLAME SENSOR
GND	EQUIPMENT GROUND
GV	GAS VALVE
HPS	HIGH PRESSURE SWITCH
IIC	INTEGRATED IGNITION CONTROL
IGN	IGNITOR
LS	LIMIT SWITCH
LPS	LOW PRESSURE SWITCH
PLF	FEMALE PLUG/CONNECTOR
PS	PRESSURE SWITCH
RS	ROLLOUT SWITCH
TB1	TERMINAL BLOCK (24V SIGNAL)
TR	TRANSFORMER
VM	VENT MOTOR
VMR	VENT MOTOR RELAY
BC	BLOWER CAPACITOR

NOTES

1. REPLACEMENT WIRE MUST BE THE SAME SIZE AND TYPE OF INSULATION AS ORIGINAL. (USE COPPER CONDUCTOR ONLY).
2. FOR 208 VOLT TRANSFORMER OPERATION MOVE BLACK WIRE FROM TERMINAL ③ TO TERMINAL ② ON TRANSFORMER.
3. FOR DIFFERENT THAN FACTORY SPEED TAP. CHANGE COOLING SPEED AT COOL TERMINAL. CHANGE HEATING SPEED AT HEAT TERMINAL ON CONTROL BOARD
   3 SPEED MOTOR
   RD - LOW SPEED
   BL - MED. SPEED
   BK - HIGH SPEED
4. ACCESSORY ECONOMIZER PLUG ADJACENT TO BLOWER HOUSING IN RETURN AIR COMPARTMENT. REMOVE MALE PLUG AND ATTACH FEMALE PLUG TO ECONOMIZER ACCESSORY.
5. USE COPPER CONDUCTORS ONLY.
   ++ USE NEC CLASS 2 WIRE.
6. PURPLE WIRE CONNECTS TO TRANSFORMER (PIN 1).
7. SPEED TAP TERMINATIONS SHOWN ON DIAGRAM ARE REPRESENTATIVE, BUT ACTUAL FACTORY SETTING MAY BE DIFFERENT BASED ON HEATING VALUE AND CAPACITY OF UNIT.
8. TO RUN DIFFERENT SPEED FOR HEATING AND COOLING, DISCONNECT GEEEN JUMPER FROM "COOL" TERMINAL AND REPLACE WITH APPROPRIATE SPEED TAP. THEN PLACE DISCONNECTED END OF JUMPER ON "UNUSED" TERMINAL LEFT OPEN BY MOVING THE SPEED TAP.

SEE UNIT RATING PLATE FOR TYPE AND SIZE OF OVERCURRENT PROTECTION.

208-240/3/60 0140L00512 REV B

FACTORY WIRING
- LINE VOLTAGE
- LOW VOLTAGE
- OPTIONAL HIGH VOLTAGE

FIELD WIRING
- HIGH VOLTAGE
- LOW VOLTAGE

WIRE CODE

BK	BLACK
BL	BLUE
BR	BROWN
GR	GREEN
OR	ORANGE
PK	PINK
PU	PURPLE
RD	RED
WH	WHITE
YL	YELLOW
BL/PK	BLUE WITH PINK STRIP
YL/PK	YELLOW WITH PINK STRIP

THERMOSTAT FIELD WIRING ++

NO ECONOMIZER

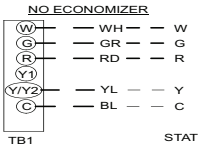

WITH ECONOMIZER OPTION

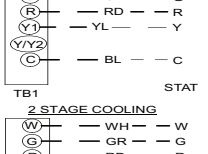

2 STAGE COOLING

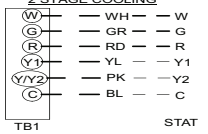

WARNING

High Voltage: Disconnect all power before servicing or installing this unit. Multiple power sources may be present. Failure to do so may cause property damage, personal injury, or death.

Wiring is subject to change. Always refer to the wiring diagram or the unit for the most up-to-date wiring.

WIRING DIAGRAM — CPG036/48*3D (THREE-PHASE, DIRECT DRIVE)

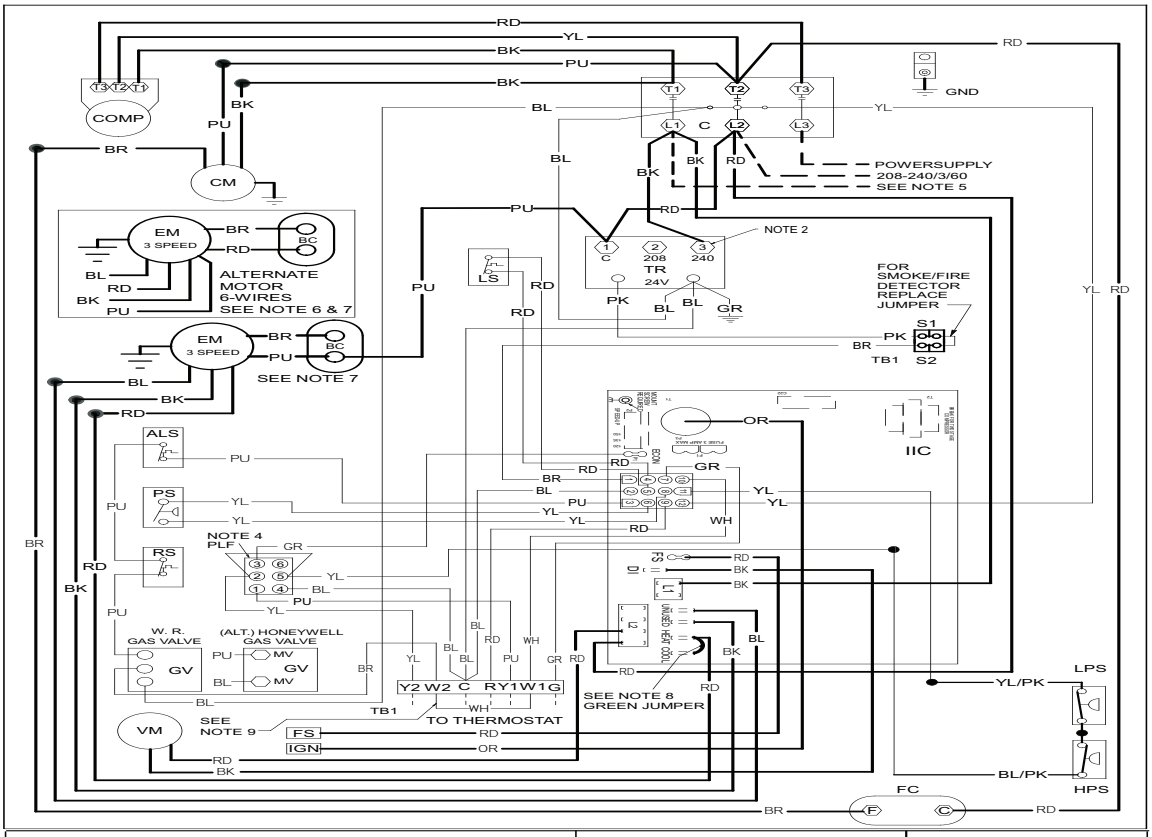

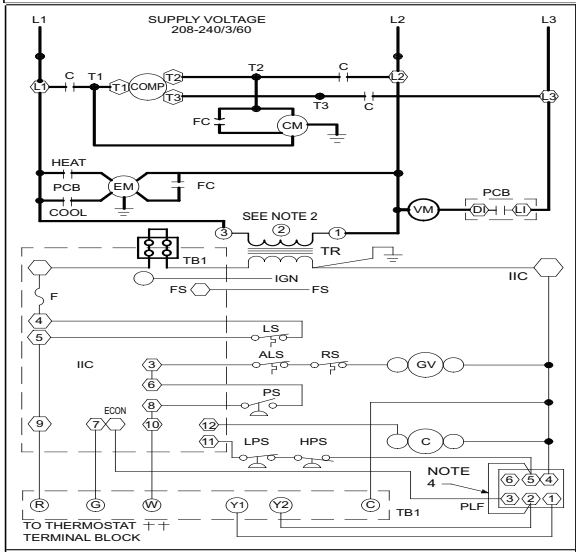

INSTALLER/SERVICEMAN

THE STATUS LIGHT ON THE FURNACE CONTROL MAY BE USED AS A GUIDE TO TROUBLESHOOTING THIS APPLIANCE. STATUS LIGHT CODES ARE AS FOLLOWS:

STATUS LIGHT	EQUIP. STATUS	CHECK
ON	NORMAL OPERATION	
OFF	NO POWER OR INTERNAL CONTROL FAULT	CHECK INPUT POWER CHECK FUSE ON CONTROL REPLACE CONTROL
1 BLINK	IGNITION FAILURE OR OPEN ROLLOUT SWITCH OR OPEN AUX. LIMIT SWITCH	GAS FLOW GAS PRESSURE GAS VALVE FLAME SENSOR FLAME ROLLOUT BAD SWITCH AUX. LIMIT OPEN
2 BLINKS	PRESSURE SWITCH OPEN	CHECK PRESSURE SWITCH
3 BLINKS	PRESSURE SWITCH CLOSED WITHOUT INDUCER ON	CHECK PRESSURE SWITCH
4 BLINKS	OPEN LIMIT SWITCH	MAIN LIMIT OPEN BAD SWITCH
5 BLINKS	FALSE FLAME SENSED	STICKING GAS VALVE
6 BLINKS	COMPRESSOR OUTPUT DELAY	3 MIN. COMP. ANTI-CYCLE TIMER

COMPONENT LEGEND

ALS	AUXILIARY LIMIT SWITCH
COMP	COMPRESSOR
CM	CONDENSER MOTOR
C	CONTACTOR
EM	EVAPORATOR MOTOR
F	FUSE
FC	FAN CAPACITOR
FS	FLAME SENSOR
GND	EQUIPMENT GROUND
GV	GAS VALVE
HPS	HIGH PRESSURE SWITCH
IIC	INTEGRATED IGNITION CONTROL
IGN	IGNITOR
LS	LIMIT SWITCH
LPS	LOW PRESSURE SWITCH
PLF	FEMALE PLUG/CONNECTOR
PS	PRESSURE SWITCH
RS	ROLLOUT SWITCH
TB1	TERMINAL BLOCK (24V SIGNAL)
TR	TRANSFORMER
VM	VENT MOTOR
VMR	VENT MOTOR RELAY
BC	BLOWER CAPACITOR

NOTES

1. REPLACEMENT WIRE MUST BE THE SAME SIZE AND TYPE OF INSULATION AS ORIGINAL. (USE COPPER CONDUCTOR ONLY).
2. FOR 208 VOLT TRANSFORMER OPERATION MOVE BLACK WIRE FROM TERMINAL 3 TO TERMINAL 2 ON TRANSFORMER.
3. FOR DIFFERENT THAN FACTORY SPEED TAP. CHANGE COOLING SPEED AT COOL TERMINAL. CHANGE HEATING SPEED AT HEAT TERMINAL ON CONTROL BOARD
   3 SPEED MOTOR
   RD - LOW SPEED
   BL - MED. SPEED
   BK - HIGH SPEED
4. ACCESSORY ECONOMIZER PLUG ADJACENT TO BLOWER HOUSING IN RETURN AIR COMPARTMENT. REMOVE MALE PLUG AND ATTACH FEMALE PLUG TO ECONOMIZER ACCESSORY.
5. USE COPPER CONDUCTORS ONLY.
   ┼┼ USE NEC CLASS 2 WIRE.
6. PURPLE WIRE CONNECTS TO TRANSFORMER (PIN 1).
7. SPEED TAP TERMINATIONS SHOWN ON DIAGRAM ARE REPRESENTATIVE, BUT ACTUAL FACTORY SETTING MAY BE DIFFERENT BASED ON HEATING VALUE AND CAPACITY OF UNIT.
8. TO RUN DIFFERENT SPEED FOR HEATING AND COOLING, DISCONNECT GEEEN JUMPER FROM "COOL" TERMINAL AND REPLACE WITH APPROPRIATE SPEED TAP. THEN PLACE DISCONNECTED END OF JUMPER ON "UNUSED" TERMINAL LEFT OPEN BY MOVING THE SPEED TAP.
9. FOR LOW STAGE OPERATION ONLY, REMOVE WHITE JUMPER. FOR 2 STAGE OPERATION, REMOVE JUMPER AND CONNECT W2 TO W1 ON THERMOSTAT.

SEE UNIT RATING PLATE FOR TYPE AND SIZE OF OVERCURRENT PROTECTION.

208-240/3/60 0140L00507 REV B

FACTORY WIRING
LINE VOLTAGE
LOW VOLTAGE
OPTIONAL HIGH VOLTAGE

FIELD WIRING
HIGH VOLTAGE
LOW VOLTAGE

WIRE CODE

BK	BLACK
BL	BLUE
BR	BROWN
GR	GREEN
OR	ORANGE
PK	PINK
PU	PURPLE
RD	RED
WH	WHITE
YL	YELLOW
BL/PK	BLUE WITH PINK STRIP
YL/PK	YELLOW WITH PINK STRIP

THERMOSTAT FIELD WIRING ┼┼

NO ECONOMIZER

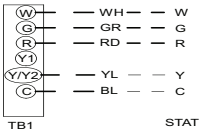

WITH ECONOMIZER OPTION

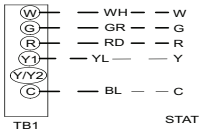

2 STAGE COOLING

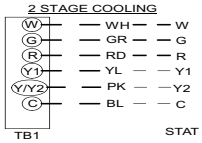

WARNING

High Voltage: Disconnect all power before servicing or installing this unit. Multiple power sources may be present. Failure to do so may cause property damage, personal injury, or death.

Wiring is subject to change. Always refer to the wiring diagram or the unit for the most up-to-date wiring.

WIRING DIAGRAM — CPG036-600904B/7B — CPG036*4B/7B — CPG072*4B/7B (460V/575v, BELT DRIVE)

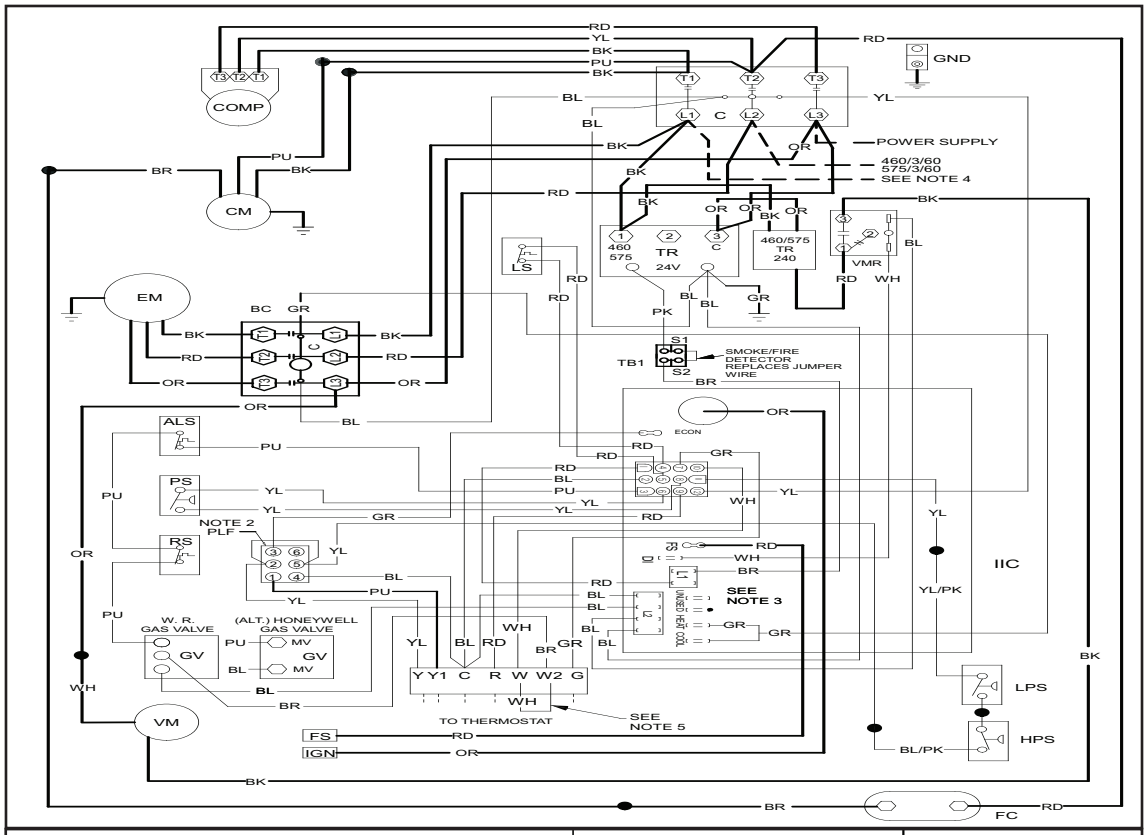

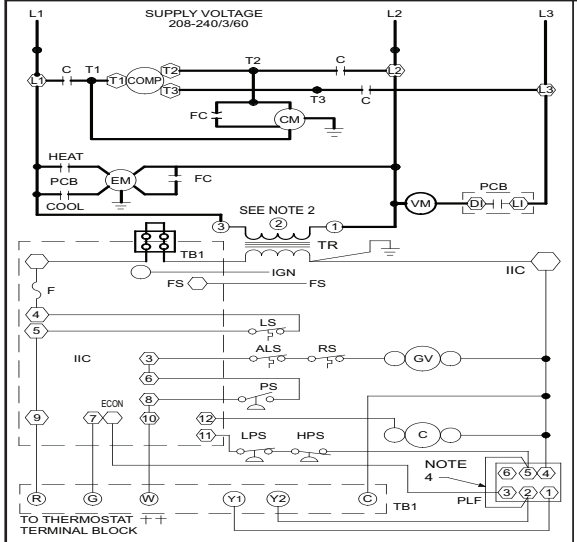

INSTALLER/SERVICEMAN

THE STATUS LIGHT ON THE FURNACE CONTROL MAY BE USED AS A GUIDE TO TROUBLESHOOTING THIS APPLIANCE. STATUS LIGHT CODES ARE AS FOLLOWS:

STATUS LIGHT	EQUIP. STATUS	CHECK
ON	NORMAL OPERATION	-
OFF	NO POWER OR INTERNAL CONTROL FAULT	CHECK INPUT POWER CHECK FUSE ON CONTROL REPLACE CONTROL
1 BLINK	IGNITION FAILURE OR OPEN ROLLOUT SWITCH OR OPEN AUX. LIMIT SWITCH	GAS FLOW GAS PRESSURE GAS VALVE FLAME SENSOR FLAME ROLLOUT BAD SWITCH AUX. LIMIT OPEN
2 BLINKS	PRESSURE SWITCH OPEN	CHECK PRESSURE SWITCH
3 BLINKS	PRESSURE SWITCH CLOSED WITHOUT INDUCER ON	CHECK PRESSURE SWITCH
4 BLINKS	OPEN LIMIT SWITCH	MAIN LIMIT OPEN BAD SWITCH
5 BLINKS	FALSE FLAME SENSED	STICKING GAS VALVE
6 BLINKS	COMPRESSOR OUTPUT DELAY	3 MIN. COMP ANTI-CYCLE TIMER

COMPONENT LEGEND

ALS	AUXILIARY LIMIT SWITCH
COMP	COMPRESSOR
CM	CONDENSER MOTOR
C	CONTACTOR
EM	EVAPORATOR MOTOR
F	FUSE
FC	FAN CAPACITOR
FS	FLAME SENSOR
GND	EQUIPMENT GROUND
GV	GAS VALVE
HPS	HIGH PRESSURE SWITCH
IIC	INTEGRATED IGNITION CONTROL
IGN	IGNITOR
LS	LIMIT SWITCH
LPS	LOW PRESSURE SWITCH
PLF	FEMALE PLUG/CONNECTOR
PS	PRESSURE SWITCH
RS	ROLLOUT SWITCH
TB1	TERMINAL BLOCK (24V SIGNAL)
TR	TRANSFORMER
VM	VENT MOTOR
VMR	VENT MOTOR RELAY
BC	BLOWER CAPACITOR

NOTES

1. REPLACEMENT WIRE MUST BE THE SAME SIZE AND TYPE OF INSULATION AS ORIGINAL. (USE COPPER CONDUCTOR ONLY).
2. FOR 208 VOLT TRANSFORMER OPERATION MOVE BLACK WIRE FROM TERMINAL ③ TO TERMINAL ② ON TRANSFORMER.
3. FOR DIFFERENT THAN FACTORY SPEED TAP. CHANGE COOLING SPEED AT COOL TERMINAL. CHANGE HEATING SPEED AT HEAT TERMINAL ON CONTROL BOARD
   3 SPEED MOTOR
   RD - LOW SPEED
   BL - MED. SPEED
   BK - HIGH SPEED
4. ACCESSORY ECONOMIZER PLUG ADJACENT TO BLOWER HOUSING IN RETURN AIR COMPARTMENT. REMOVE MALE PLUG AND ATTACH FEMALE PLUG TO ECONOMIZER ACCESSORY.
5. USE COPPER CONDUCTORS ONLY.
   ++ USE NEC CLASS 2 WIRE.
6. PURPLE WIRE CONNECTS TO TRANSFORMER (PIN 1).
7. SPEED TAP TERMINATIONS SHOWN ON DIAGRAM ARE REPRESENTATIVE, BUT ACTUAL FACTORY SETTING MAY BE DIFFERENT BASED ON HEATING VALUE AND CAPACITY OF UNIT.
8. TO RUN DIFFERENT SPEED FOR HEATING AND COOLING, DISCONNECT GREEN JUMPER FROM "COOL" TERMINAL AND REPLACE WITH APPROPRIATE SPEED TAP. THEN PLACE DISCONNECTED END OF JUMPER ON "UNUSED" TERMINAL LEFT OPEN BY MOVING THE SPEED TAP.
9. FOR LOW STAGE OPERATION ONLY, REMOVE WHITE JUMPER. FOR 2 STAGE OPERATION, REMOVE JUMPER AND CONNECT W2 TO W1 ON THERMOSTAT.

SEE UNIT RATING PLATE FOR TYPE AND SIZE OF OVERCURRENT PROTECTION.

208-240/3/60 0140L00507 REV B

FACTORY WIRING
- LINE VOLTAGE
- LOW VOLTAGE
- OPTIONAL HIGH VOLTAGE

FIELD WIRING
- HIGH VOLTAGE
- LOW VOLTAGE

WIRE CODE

BK	BLACK
BL	BLUE
BR	BROWN
GR	GREEN
OR	ORANGE
PK	PINK
PU	PURPLE
RD	RED
WH	WHITE
YL	YELLOW
BL/PK	BLUE WITH PINK STRIP
YL/PK	YELLOW WITH PINK STRIP

THERMOSTAT FIELD WIRING ++

NO ECONOMIZER

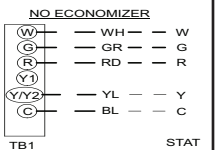

WITH ECONOMIZER OPTION

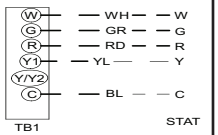

2 STAGE COOLING

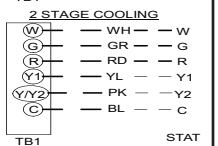

WARNING High Voltage: Disconnect all power before servicing or installing this unit. Multiple power sources may be present. Failure to do so may cause property damage, personal injury, or death.

Wiring is subject to change. Always refer to the wiring diagram or the unit for the most up-to-date wiring.

WIRING DIAGRAM — CPG036/48/600903B — CPG072*3B (THREE-PHASE, BELT DRIVE)

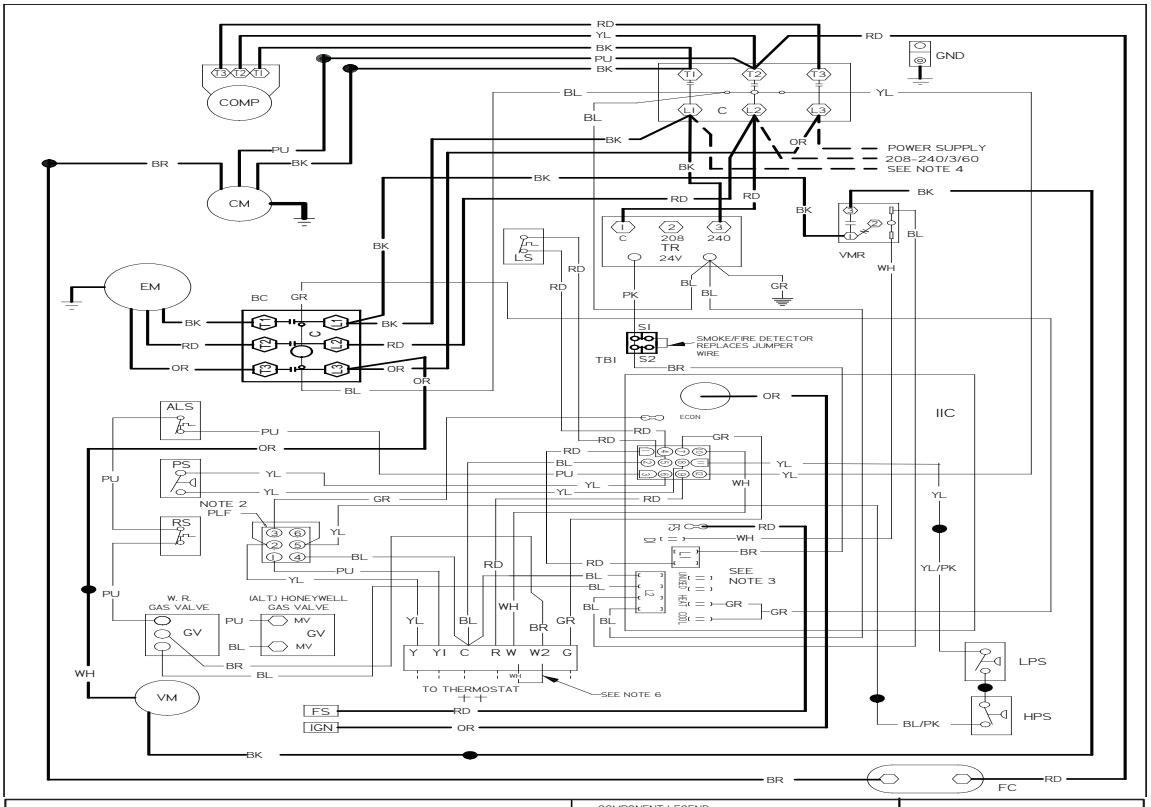

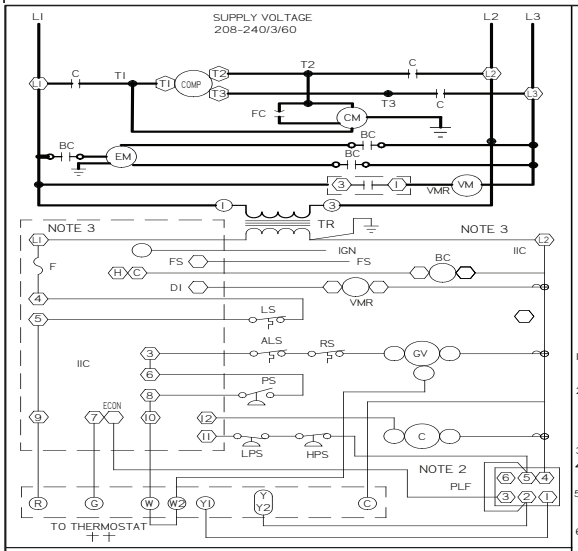

COMPONENT LEGEND

ALS	AUXILIARY LIMIT SWITCH
BC	BLOWER CONTACTOR
COMP	COMPRESSOR
CM	CONDENSER MOTOR
C	CONTACTOR
EM	EVAPORATOR MOTOR
F	FUSE
FC	FAN CAPACITOR
FS	FLAME SENSOR
GND	EQUIPMENT GROUND
GV	GAS VALVE
HPS	HIGH PRESSURE SWITCH
IBR	INDOOR BLOWER RELAY
IIC	INTEGRATED IGNITION CONTROL
IGN	IGNITOR
LPS	LOW PRESSURE SWITCH
LS	LIMIT SWITCH
PLF	FEMALE PLUG/CONNECTOR
PS	PRESSURE SWITCH
RS	ROLLOUT SWITCH
TBI	TERMINAL BLOCK (24V SIGNAL)
TR	TRANSFORMER
VM	VENT MOTOR
VMR	VENT MOTOR RELAY

NOTES

1. REPLACEMENT WIRE MUST BE THE SAME SIZE AND TYPE OF INSULATION AS ORIGINAL. (USE COPPER CONDUCTOR ONLY).
2. ACCESSORY ECONOMIZER PLUG ADJACENT TO BLOWER HOUSING IN RETURN AIR COMPARTMENT. REMOVE MALE PLUG AND ATTACH FEMALE PLUG TO THE ECONOMIZER ACCESSORY.
3. L1 AND L2 ON IIC CONTROL IS 24V INPUT.
4. **USE COPPER CONDUCTORS ONLY.**
   ++ USE NEC CLASS 2 WIRE.
5. FOR 208 VOLT TRANSFORMER OPERATION, MOVE BLACK WIRE FROM TERMINAL 3 TO TERMINAL 2 ON TRANSFORMER.
6. FOR LOW STAGE OPERATION ONLY, REMOVE WHITE JUMPER FOR 2 STAGE OPERATION, REMOVE JUMPER AND CONNECT W2 TO W2 ON THERMOSTAT.

SEE UNIT RATING PLATE FOR TYPE AND SIZE OF OVER CURRENT PROTECTION

208-240/3/60 0140L00981 REV B

FACTORY WIRING
- LINE VOLTAGE
- LOW VOLTAGE
- OPTIONAL HIGH VOLTAGE

FIELD WIRING
- HIGH VOLTAGE
- LOW VOLTAGE

WIRE CODE

BK	BLACK
BL	BLUE
BR	BROWN
GR	GREEN
OR	ORANGE
PK	PINK
PU	PURPLE
RD	RED
WH	WHITE
YL	YELLOW
BL/PK	BLUE WITH PINK STRIP
YL/PK	YELLOW WITH PINK STRIP

THERMOSTAT FIELD WIRING ++

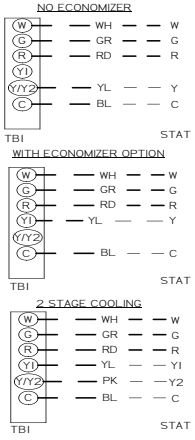

INSTALLER/SERVICEMAN

THE STATUS LIGHT ON THE FURNACE CONTROL MAY BE USED AS A GUIDE TO TROUBLESHOOTING THIS APPLIANCE. STATUS LIGHT CODES ARE AS FOLLOWS.

STATUS LIGHT	EQUIP. STATUS	CHECK
ON	NORMAL OPERATION	-
OFF	NO POWER OR INTERNAL CONTROL	CHECK INPUT POWER CHECK FUSE ON CONTROL REPLACE CONTROL
1 BLINK	IGNITION FAILURE OPEN ROLLOUT SWITCH OPEN AUX. LIMIT SWITCH	GAS FLOW GAS PRESSURE GAS VALVE FLAME SENSOR FLAME ROLLOUT BAD SWITCH AUX. LIMIT OPEN
2 BLINKS	PRESSURE SWITCH OPEN	CHECK PRESSURE SWITCH
3 BLINKS	PRESSURE SWITCH CLOSED WITHOUT INDUCER ON	CHECK PRESSURE SWITCH
4 BLINKS	OPEN LIMIT SWITCH	MAIN LIMIT OPEN BAD SWITCH
5 BLINKS	FALSE FLAME SENSED	STICKING GAS VALVE
6 BLINKS	COMPRESSOR OUTPUT DELAY	3 MIN. COMP. ANTI-CYCLE TIMER

WARNING

High Voltage: Disconnect all power before servicing or installing this unit. Multiple power sources may be present. Failure to do so may cause property damage, personal injury, or death.

Wiring is subject to change. Always refer to the wiring diagram or the unit for the most up-to-date wiring.

WIRING DIAGRAM —CPG036/480454B —CPG072*4B/7B (460V/ 575V BELT DRIVE)

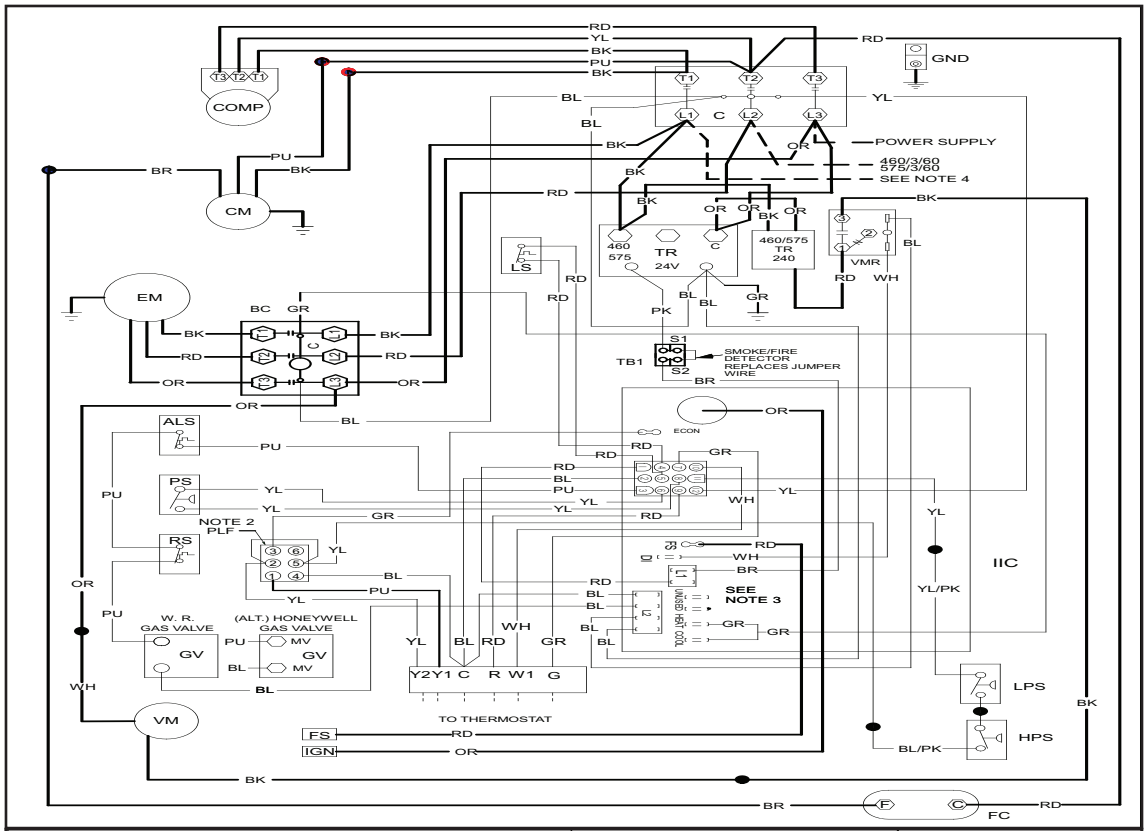

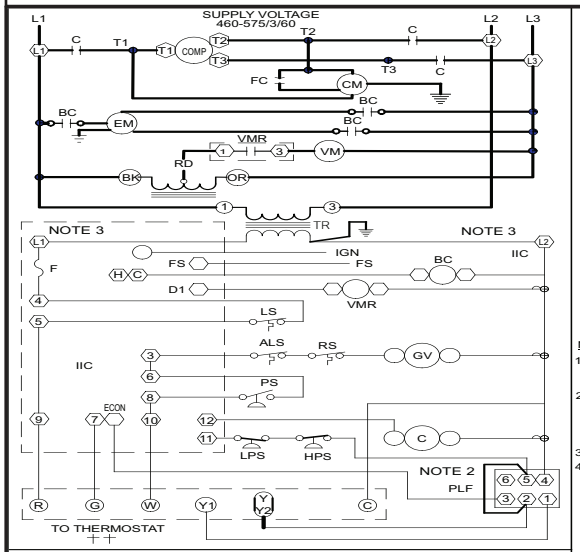

INSTALLER/SERVICEMAN

THE STATUS LIGHT ON THE FURNACE CONTROL MAY BE USED AS A GUIDE TO TROUBLESHOOTING THIS APPLIANCE. STATUS LIGHT CODES ARE AS FOLLOWS:

STATUS LIGHT	EQUIP. STATUS	CHECK
ON	NORMAL OPERATION	-
OFF	NO POWER OR INTERNAL CONTROL	CHECK INPUT POWER CHECK FUSE ON CONTROL REPLACE CONTROL
1 BLINK	IGNITION FAILURE OPEN ROLLOUT SWITCH OPEN AUX. LIMIT SWITCH	GAS FLOW GAS PRESSURE GAS VALVE FLAME SENSOR FLAME ROLLOUT BAD SWITCH AUX. LIMIT OPEN
2 BLINKS	PRESSURE SWITCH OPEN	CHECK PRESSURE SWITCH
3 BLINKS	PRESSURE SWITCH CLOSED WITHOUT INDUCER ON	CHECK PRESSURE SWITCH
4 BLINKS	OPEN LIMIT SWITCH	MAIN LIMIT OPEN BAD SWITCH
5 BLINKS	FALSE FLAME SENSED	STICKING GAS VALVE
6 BLINKS	COMPRESSOR OUTPUT DELAY	3 MIN. COMP. ANTI-CYCLE TIMER

COMPONENT LEGEND

ALS	AUXILLARY LIMIT SWITCH
BC	BLOWER CONTACTOR
COMP	COMPRESSOR
CM	CONDENSER MOTOR
C	CONTACTOR
EM	EVAPORATOR MOTOR
F	FUSE
FC	FAN CAPACITOR
FS	FLAME SENSOR
GND	EQUIPMENT GROUND
GV	GAS VALVE
HPS	HIGH PRESSURE SWITCH
IBR	INDOOR BLOWER RELAY
IIC	INTEGRATED IGNITION CONTROL
IGN	IGNITOR
LPS	LOW PRESSURE SWITCH
LS	LIMIT SWITCH
PLF	FEMALE PLUG/CONNECTOR
PS	PRESSURE SWITCH
RS	ROLLOUT SWITCH
TB1	TERMINAL BLOCK (24V SIGNAL)
TR	TRANSFORMER
VM	VENT MOTOR
VMR	VENT MOTOR RELAY

NOTES

1. REPLACEMENT WIRE MUST BE THE SAME SIZE AND TYPE OF INSULATION AS ORIGINAL. (USE COPPER CONDUCTOR ONLY).
2. ACCESSORY ECONOMIZER PLUG ADJACENT TO BLOWER HOUSING IN RETURN AIR COMPARTMENT. REMOVE MALE PLUG AND ATTACH FEMALE PLUG TO THE ECONOMIZER ACCESSORY.
3. L1 AND L2 ON IIC CONTROL IS 24V INPUT.
4. USE COPPER CONDUCTORS ONLY.

++ USE NEC CLASS 2 WIRE.

SEE UNIT RATING PLATE FOR TYPE AND SIZE OF OVER CURRENT PROTECTION.

460-575/3/60 0140L00871 REV B

FACTORY WIRING
- LINE VOLTAGE
- LOW VOLTAGE
- OPTIONAL HIGH VOLTAGE

FIELD WIRING
- HIGH VOLTAGE
- LOW VOLTAGE

WIRE CODE

BK	BLACK
BL	BLUE
BR	BROWN
GR	GREEN
OR	ORANGE
PK	PINK
PU	PURPLE
RD	RED
WH	WHITE
YL	YELLOW
BL/PK	BLUE WITH PINK STRIP
YL/PK	YELLOW WITH PINK STRIP

THERMOSTAT FIELD WIRING ++

NO ECONOMIZER

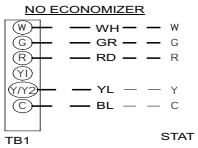

WITH ECONOMIZER OPTION

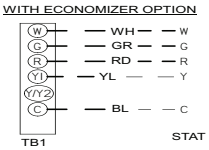

2 STAGE COOLING

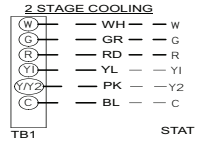

High Voltage: Disconnect all power before servicing or installing this unit. Multiple power sources may be present. Failure to do so may cause property damage, personal injury, or death.

WARNING

Wiring is subject to change. Always refer to the wiring diagram or the unit for the most up-to-date wiring.

WIRING DIAGRAM — CPG036/480453B (THREE-PHASE, BELT DRIVE)

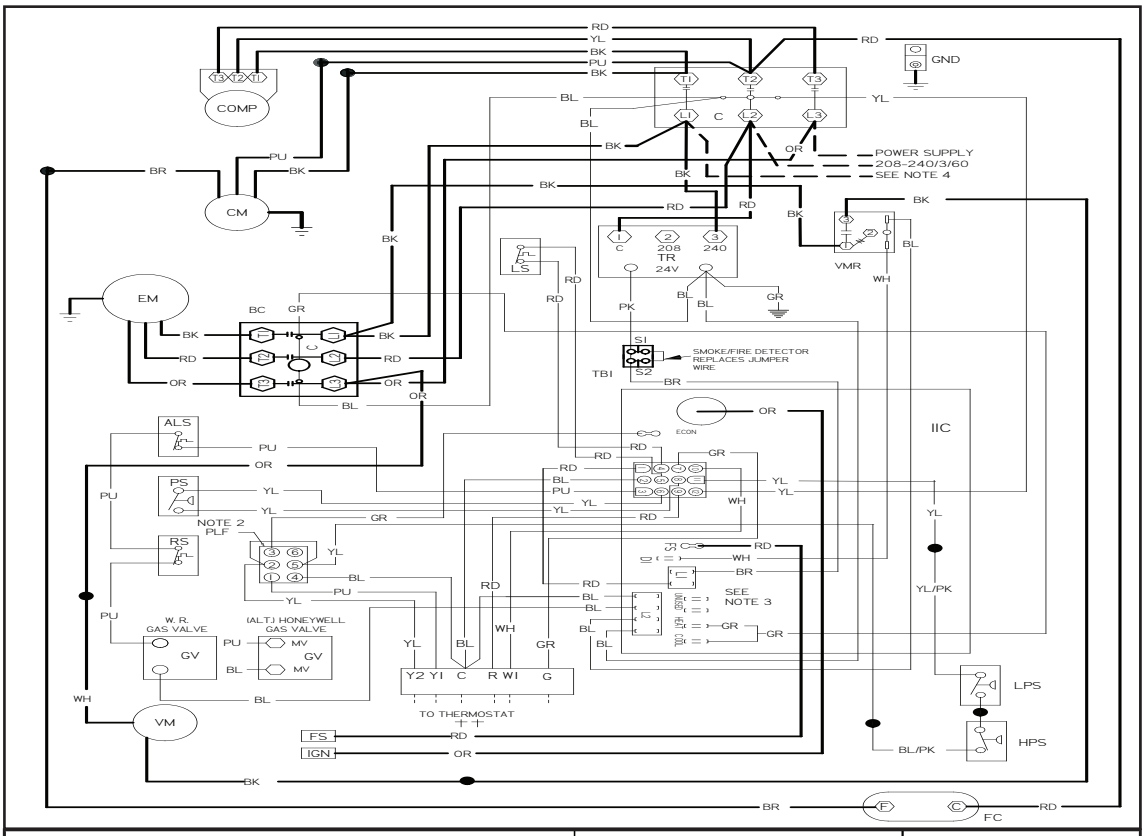

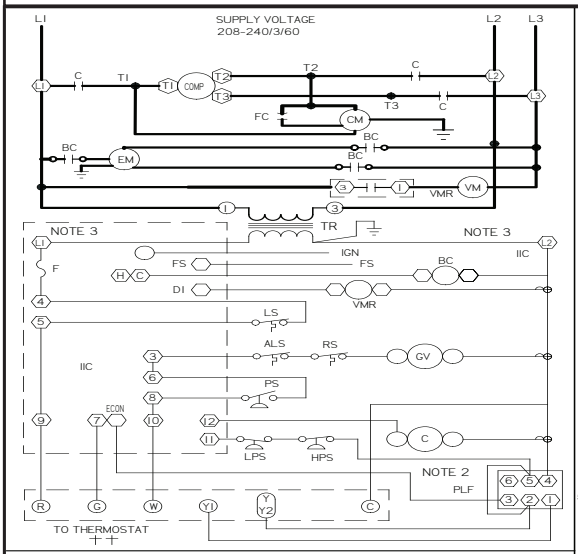

INSTALLER/SERVICEMAN

THE STATUS LIGHT ON THE FURNACE CONTROL MAY BE USED AS A GUIDE TO TROUBLESHOOTING THIS APPLIANCE. STATUS LIGHT CODES ARE AS FOLLOWS.

STATUS LIGHT	EQUIP. STATUS	CHECK
ON	NORMAL OPERATION	-
OFF	NO POWER OR INTERNAL CONTROL	CHECK INPUT POWER CHECK FUSE ON CONTROL REPLACE CONTROL
1 BLINK	IGNITION FAILURE OPEN ROLLOUT SWITCH OPEN AUX. LIMIT SWITCH	GAS FLOW GAS PRESSURE GAS VALVE FLAME SENSOR FLAME ROLLOUT BAD SWITCH AUX. LIMIT OPEN
2 BLINKS	PRESSURE SWITCH OPEN	CHECK PRESSURE SWITCH
3 BLINKS	PRESSURE SWITCH CLOSED WITHOUT INDUCER ON	CHECK PRESSURE SWITCH
4 BLINKS	OPEN LIMIT SWITCH	MAIN LIMIT OPEN BAD SWITCH
5 BLINKS	FALSE FLAME SENSED	STICKING GAS VALVE
6 BLINKS	COMPRESSOR OUTPUT DELAY	3 MIN. COMP. ANTI-CYCLE TIMER

COMPONENT LEGEND

ALS	AUXILIARY LIMIT SWITCH
BC	BLOWER CONTACTOR
COMP	COMPRESSOR
CM	CONDENSER MOTOR
C	CONTACTOR
EM	EVAPORATOR MOTOR
F	FUSE
FC	FAN CAPACITOR
FS	FLAME SENSOR
GND	EQUIPMENT GROUND
GV	GAS VALVE
HPS	HIGH PRESSURE SWITCH
IBR	INDOOR BLOWER RELAY
IIC	INTEGRATED IGNITION CONTROL
IGN	IGNITOR
LPS	LOW PRESSURE SWITCH
LS	LIMIT SWITCH
PLF	FEMALE PLUG/CONNECTOR
PS	PRESSURE SWITCH
RS	ROLLOUT SWITCH
TBI	TERMINAL BLOCK (24V SIGNAL)
TR	TRANSFORMER
VM	VENT MOTOR
VMR	VENT MOTOR RELAY

NOTES

1. REPLACEMENT WIRE MUST BE THE SAME SIZE AND TYPE OF INSULATION AS ORIGINAL. (USE COPPER CONDUCTOR ONLY).
2. ACCESSORY ECONOMIZER PLUG ADJACENT TO BLOWER HOUSING IN RETURN AIR COMPARTMENT. REMOVE MALE PLUG AND ATTACH FEMALE PLUG TO THE ECONOMIZER ACCESSORY.
3. L1 AND L2 ON IIC CONTROL IS 24V INPUT.
4. **USE COPPER CONDUCTORS ONLY.**
   ++ USE NEC CLASS 2 WIRE.
5. FOR 208 VOLT TRANSFORMER OPERATION, MOVE BLACK WIRE FROM TERMINAL (3) TO TERMINAL (2) ON TRANSFORMER.

SEE UNIT RATING PLATE FOR TYPE AND SIZE OF OVER CURRENT PROTECTION

208-240/3/60 0140L00979 REV B

FACTORY WIRING
- LINE VOLTAGE
- LOW VOLTAGE
- OPTIONAL HIGH VOLTAGE

FIELD WIRING
- HIGH VOLTAGE
- LOW VOLTAGE

WIRE CODE

BK	BLACK
BL	BLUE
BR	BROWN
GR	GREEN
OR	ORANGE
PK	PINK
PU	PURPLE
RD	RED
WH	WHITE
YL	YELLOW
BL/PK	BLUE WITH PINK STRIP
YL/PK	YELLOW WITH PINK STRIP

THERMOSTAT FIELD WIRING ++

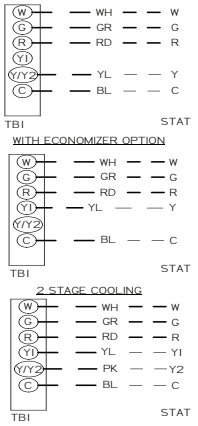

WARNING High Voltage: Disconnect all power before servicing or installing this unit. Multiple power sources may be present. Failure to do so may cause property damage, personal injury, or death.

Wiring is subject to change. Always refer to the wiring diagram or the unit for the most up-to-date wiring.

Accessories

Item #	Description	Fits Model Sizes	Field-Installed	Factory-Installed
14CURB3672B	14" Roof Curb	3-6 tons	√	
25FD3672	25% Manual Fresh Air Damper	3-6 tons	√	
25MFD3672	25% Motorized Fresh Air Damper	3-6 tons	√	
DNBBS3672B	Burglar Bar Sleeves Includes Supply & Return	3-6 tons	√	
CDK36	Concentric Duct Kit	3 tons	√	
CDK4872	Concentric Duct Kit	4-6 tons	√	
HAILGD03	Condenser Coil Hail Guard	3-5 tons	√	√
HAILGD04	Condenser Coil Hail Guard	6 tons	√	√
	Convenience Outlet: Non Powered			√
	Convenience Outlet: Powered			√
DNECONGS3672B	Downflow Economizer	3-6 tons	√	√
DNSQRRND36B	Downflow Square-to-Round Adapter 16" Round	3 tons	√	
DNSQRRND4872B	Downflow Square-to-Round Adapter 18" Round	4-6 tons	√	
HA-02	High-Altitude Kit	All Models	√	
HSKT036B	High-Static Kit (230/460v)	3 tons	√	√
HSKT048B	High-Static Kit (230/460v)	4 tons	√	√
HSKT060B	High-Static Kit (230/460v)	5 tons	√	√
HSKT072B	High-Static Kit (230/460v)	6 tons	√	√
BRD3672	Horizontal Barometric Relief Damper	3-6 tons	√	
HZECONGS3672B	Horizontal Economizer	3-6 tons	√	
GHRC-1	Hurricane Restraint Clip	All Models	√	
LAKT01	Low-Ambient Kit	3-6 tons	√	√
LPM-06	LP Conversion Kit	3-6 tons	√	√
LPT-00A	LP Conversion Kit (CPG036045 only)	3 tons	√	√
PE36722B	Power Exhaust 208/230 Volt	3-6 tons	√	
PE36724B	Power Exhaust 460 Volt	3-6 tons	√	
	Smoke Detector		√	
	Stainless-Steel Heat Exchanger (Type 409)			√
	UltraGold Condenser Coil			√

Notes

Goodman Manufacturing Company, L.P., reserves the right to discontinue, or change at any time, specifications or designs without notice or without incurring obligations. © 2011 • Goodman Manufacturing Company, L.P. • Houston, Texas • Printed in the USA.