Goodman
Air Conditioning & Heating

CPC Commercial

3- to 6-Ton Packaged Air Conditioners

13 SEER / Up to 11.3 EER

Cooling Capacity:
34,600 — 71,000 BTU/h

Standard Features

- R-410A chlorine-free refrigerant
- High-efficiency scroll compressor
- Copper tube/aluminum fin coils
- High- and low-pressure switches
- Contactor with lugs
- High-capacity, steel-cased filter drier
- Heater kits with single-point entry
- 24-volt terminal strip
- Convertible
- Easy to service
- Built-in filter rack with standard 2” filters
- Bottom utility entry
- AHRI Certified; ETL Listed

Cabinet Features

- Heavy-gauge, galvanized-steel cabinet with UV-resistant powder-paint finish
- Full Perimeter Rail

Contents

Nomenclature 2
Product Specifications 3
Expanded Cooling Data 8
Heat Kit Electrical Data 20
Airflow Data 24
Dimensions 31
Wiring Diagrams 34
Accessories 40

5 YEAR PARTS LIMITED WARRANTY* R-410A REFRIGERANT ETL US AHRI CERTIFIED BBB ACCREDITED BUSINESS BETTER VALUE

* Complete warranty details available from your local dealer or at www.goodmanmfg.com.

NOMENCLATURE

C	P	C	060	020	3	B	*	*	*	A	*
1	2	3	4,5,6	7,8,9	10	11	12	13	14	15	16

Revision Levels
Major & Minor

Brand
- C Commercial

Configuration
- P Packaged Unit

Application
- C Cooling
- G Gas Heat
- H Heat Pump

Nominal Gross Cooling Capacity

036	3 Tons	102	8½ Tons
048	4 Tons	120	10 Tons
060	5 Tons	150	12½ tons
072	6 Tons	180 & 181	15 Tons
090	7½ Tons	240	20 Tons

Nominal Heating Capacity

CPG		CPC/CPH (Factory-Installed Electric Heat)		
045	45,000 BTU/h	XXX	No Heat	
090	90,000 BTU/h	010	10 kW	030 30 kW
115	115,000 BTU/h	015	15 kW	031 30 kW
140	140,000 BTU/h	016	15 kW	045 45 kW
210	210,000 BTU/h	018	18 kW	046 45 kW
350	350,000 BTU/h	020	20 kW	060 60 kW
400	400,000 BTU/h	025	25 kW	

See product specifications for heat size(s) available for each capacity.

Voltage

1	208-230/1/60	4	460/3/60
3	208-230/3/60	7	575/3/60

Supply Fan/Drive Type/Motor
- B Belt Drive
- D Direct Drive

Factory-Installed Options
- X No Options
- A Downflow Economizer
- H Disconnect Switch (non-fused)
- J Downflow Economizer; Disconnect Switch (non-fused)

Note: Not all options available for all products.

Factory-Installed Options
- X No Options
- A Non-powered convenience outlet
- B Powered convenience outlet
- C Low-ambient kit
- D Return air smoke detector
- E Supply air smoke detector
- F Non-powered convenience outlet; Low-ambient kit
- G Non-powered convenience outlet; Return air smoke detector
- H Non-powered convenience outlet; Supply air smoke detector
- J Non-powered convenience outlet; Return & Supply air smoke detectors
- K Non-powered convenience outlet; Low-ambient kit; Supply air smoke detector
- L Non-powered convenience outlet; Low-ambient kit Return & Supply air smoke detectors
- M Powered convenience outlet; Low-ambient kit
- N Powered convenience outlet; Return air smoke detector
- O Powered convenience outlet; Return & Supply air smoke detectors
- P Powered convenience outlet; Supply air smoke detector
- Q Powered convenience outlet; Low-ambient kit; Return air smoke detector
- R Powered convenience outlet; Low-ambient kit; Supply air smoke detector
- T Powered convenience outlet; Low-ambient kit; Return & Supply air smoke detectors
- U Non-powered convenience outlet; Low-ambient kit; Return air smoke detector
- V Low-ambient kit; Return air smoke detector
- W Low-ambient kit; Supply air smoke detector
- Y Low-ambient kit; Return & Supply air smoke detectors
- Z Return & Supply air smoke detectors

Factory-Installed Options
- X Standard Aluminized Heat Exchanger
- S Stainless-Steel Heat Exchanger

Factory-Installed Options
- Stainless-Steel Heat Exchanger (CPG units only): A tubular heat exchanger made of 409-type stainless steel is installed in the unit.
- Low-Ambient Kit: Allows for cooling operation at lower outdoor temperatures. On the 3- to 6-ton units, cooling operation is extended from 60°F ambient temperature to 35°F outside air temperature. On 7½- to 20-ton units, cooling operation is extended from 35°F ambient temperature to 0°F outside air temperature.
- Economizers (Downflow): Based on air conditions, can provide outside air to cool the space.
- Electric Heat Kits (CPC and CPH units only): Available in all voltage options.
- Non-powered Convenience Outlet: A 120V, 15A, GFCI outlet makes it easier for technicians to service the unit once an electrician runs power to the outlet.
- Powered Convenience Outlet: A 120V, 15A, GFCI outlet powered with a transformer built into the unit; for use when unit is not running. When a factory-installed powered convenience outlet is installed in the equipment, the unit MCA (Min. Circuit Ampacity) will increase by 7.5A for 208/230V units, increase by 3.75A for 460V units, and increase by 3A for 575V units. The MOP (Max. Overcurrent Protection) device must be sized accordingly.
- Disconnect Switch (non-fused): A disconnect switch is installed in the unit and factory wiring will be complete from the switch to the unit. Please note that for air conditioning (CPC units) and heat pump models (CPH units), the appropriate electric heat kit must be ordered to be factory-installed along with the disconnect switch (non-fused) when it is ordered. Please note that for models with a powered convenience outlet option and a disconnect switch (non-fused) option, the power to the powered convenience outlet will be shut off when the disconnect switch (non-fused) is in the off position.
- Return Air and/or Supply Air Smoke Detectors: Return air and/or supply air smoke detectors are installed in the unit.

Product Specifications — CPC036

	CPC036 ***1D***B*	CPC036 ***3D***B*	CPC036 ***3B***B*	CPC036 ***4B***B*	CPC036 ***7B***B*
Cooling Capacity					
Total BTU/h	34,600	34,600	34,600	34,600	34,600
Sensible BTU/h	25,600	25,600	25,600	25,600	25,600
SEER / EER	13 / 11.0	13 / 11.0	13 / 11.0	13 / 11.0	13 / 11.0
Decibels	78	78	78	78	78
ARI Reference #s	4385050	4385051	4385051	4385052	4397604
Evaporator Motor / Coil					
Motor Type	Direct Drive	Direct Drive	Belt Drive	Belt Drive	Belt Drive
Indoor Nominal CFM	1,200	1,200	1,200	1,200	1,200
Motor Speed Tap (Cooling)	Low Speed	Low Speed	---	---	---
Indoor motor FLA (Cooling)	2.50	2.50	3.8	1.9	2.3
Horsepower - RPM	⅓ - 890	⅓ - 890	1.0 - 1725	1.0 - 1725	1.5 - 1725
Piston Size (Cooling)	0.068	0.068	0.068	0.068	0.068
Filter Size (Qty)	(1) 24" x 24" x 2"	(1) 24" x 24" x 2"	(1) 24" x 24" x 2"	(1) 24" x 24" x 2"	(1) 24" x 24" x 2"
Drain Size (NPT)	¾"	¾"	¾"	¾"	¾"
R-410A Refrigerant Charge (oz.)	83	83	83	83	125
Evaporator Coil Face Area (ft^2)	5.4	5.4	5.4	5.4	5.4
Rows Deep/ Fins per Inch	3 / 16	3 / 16	3 / 16	3 / 16	3 / 16
Evaporator Fan					
Standard Direct Drive (D x W) HP	(10" X 9") ½	(10" X 9") ½	---	---	---
Standard Belt Drive (D x W) HP	---	---	(11" X 10") 1	(11" X 10") 1	(11" X 10") 1½
High-Static Belt Drive (D x W) HP	---	---	(11" X 10") 1½	(11" X 10") 1½	(11" X 10") 1½
# of Wheels (D x W)	---	---	1 (11" x 10")	1 (11" x 10")	1 (11" x 10")
Motor Sheave	---	---	1VL40 X ⅝	1VL40 X ⅝	1VL40 X ⅝
Blower Sheave / Belt	---	---	AK69 x 1 / AX52	AK69 x 1 / AX52	AK69 x 1 / AX52
Condenser Fan / Coil					
Quantity of Condenser Fan Motors	1	1	1	1	1
Horsepower - RPM	¼ / 1,090	¼ / 1,090	¼ / 1,090	¼ - 890	¼ - 1,075
Fan Diameter/ # Fan Blades	22 / 4	22 / 4	22 / 4	22 / 4	22 / 4
Outdoor Nominal CFM	3,800	3,800	3,800	3,800	3,800
Face Area (ft^2)	17.0	17.0	17.0	17.0	13.0
Rows Deep/ Fins per Inch	1 / 24	1 / 24	1 / 24	1 / 24	2 / 16
Compressor					
Quantity / Type	1 / Scroll	1 / Scroll	1 / Scroll	1 / Scroll	1 / Scroll
Stage	Single	Single	Single	Single	Single
Compressor RLA / LRA	16.7 / 79.0	10.5 / 73.0	10.5 / 73.0	5.8 / 38.0	3.8 / 36.5
Electrical Data					
Voltage-Phase-Frequency	208/230-1-60	208/230-3-60	208/230-3-60	460-3-60	575-3-60
Indoor Blower HP / FLA	⅓ / 2.5	⅓ / 2.5	1 / 3.8	1 / 1.9	1.5 / 2.3
Outdoor Fan HP / FLA	¼ / 1.4	¼ / 1.4	¼ / 1.4	¼ / 0.8	0.60
Total Unit Amps	20.57	14.35	15.65	8.47	6.68
Min. Circuit Ampacity[1]	25	17	18	10	8
Max. Overcurrent Protection (amps)[2]	40	25	25	15	15
Power Supply Conduit Hole	1.125"	1.125"	1.125"	1.125"	1.125"
Low Voltage Conduit Hole	½"	½"	½"	½"	½"
Operating Weight (lbs)	500	500	500	500	500
Ship Weight (lbs)	525	525	525	525	525

[1] Wire size should be determined in accordance with National Electrical Codes. Extensive wire runs will require larger wire sizes.
[2] May use fuses or HACR-type circuit breakers of the same size as noted.

Notes

- Always check the S&R plate for electrical data on the unit being installed.
- When a factory-installed powered convenience outlet is installed in the equipment, the unit MCA (Min. Circuit Ampacity) will increase by 7.5A for 208/230V units, increase by 3.75A for 460V units, and by 3A for 575V units. The MOP (Max. Overcurrent Protection) device must be sized accordingly.

Product Specifications — CPC048

	CPC048 ***1D***B*	CPC048 ***3D***B*	CPC048 ***3B***B*	CPC048 ***4B***B*	CPC048 ***7B***B*
Cooling Capacity					
Total BTU/h	45,500	45,500	45,500	45,500	45,500
Sensible BTU/h	35,000	35,000	35,000	35,000	35,000
SEER / EER	13.0 / 11.3	13.0 / 11.3	13.0 / 11.3	13.0 / 11.3	13.0 / 11.3
Decibels	78	78	78	78	78
ARI Reference #s	4385053	4385054	4385054	4385055	4397605
Evaporator Motor / Coil					
Motor Type	Direct Drive	Direct Drive	Belt Drive	Belt Drive	Belt Drive
Indoor Nominal CFM	1,600	1,600	1,600	1,600	1,600
Motor Speed Tap (Cooling)	Medium	Medium	--	--	--
Indoor Motor FLA (Cooling)	2.87	2.87	3.8	1.9	2.3
Horsepower - RPM	½ -1,000	½ -1,000	1.0 - 1,725	1.0 - 1,725	1.5 - 1,725
Piston Size (Cooling)	0.076	0.076	0.076	0.076	0.076
Filter Size (Qty)	(4) 14" x 20" x 2"	(4) 14" x 20" x 2"	(4) 14" x 20" x 2"	(4) 14" x 20" x 2"	(4) 14" x 20" x 2"
Drain Size (NPT)	¾"	¾"	¾"	¾"	¾"
R-410A Refrigerant Charge (oz.)	103	103	103	103	105
Evaporator Coil Face Area (ft^2)	7.0	7.0	7.0	7.0	7.0
Rows Deep / Fins per Inch	4 / 16	4 / 16	4 / 16	4 / 16	4 / 16
Belt Drive Evap Fan Data					
# of Wheels (D x W)	---	---	1 (11" x 10")	1 (11" x 10")	1 (11" x 10")
Motor Sheave	---	---	VL44 X 5/8	VL44 X 5/8	VL44 X 5/8
Blower Sheave / Belt	---	---	AK66 x 1 / AX52	AK66 X 1	AK66 X 1
Condenser Fan / Coil					
Quantity of Condenser Fan Motors	1	1	1	1	1
Horsepower - RPM	¼ - 1,090	¼ - 1,090	¼ - 1,090	¼ - 1,090	¼ - 1,075
Fan Diameter / # Fan Blades	22 / 4	22 / 4	22 / 4	22 / 4	22 / 4
Outdoor Nominal CFM	3,800	3,800	3,800	3,800	3,800
Face Area (ft^2)	17	17	17	17	17
Rows Deep / Fins per Inch	1 / 24	1 / 24	1 / 24	1 / 24	1 / 24
Compressor					
Quantity / Stage	1 / Single	1 / Single	1 / Single	1 / Single	1 / Single
Type	Scroll	Scroll	Scroll	Scroll	Scroll
Compressor RLA / LRA	20 / 109	13.1/ 83.1	13.1/ 83.1	6.1/ 41	4.4/ 33
Electrical Data					
Voltage-Phase-Frequency	208/230-1-60	208/230-3-60	208/230-3-60	460-3-60	575-3-60
Outdoor Fan FLA	1.40	1.40	1.40	0.80	0.60
Total Unit Amps	24.1	17.4	18.3	8.8	7.3
Min. Circuit Ampacity[1]	29	21	22	10	8
Max. Overcurrent Protection (amps)[2]	45	30	30	15	15
Power Supply Conduit Hole	1.125"	1.125"	1.125"	1.125"	1.125"
Low-Voltage Conduit Hole	½"	½"	½"	½"	½"
Operating Weight (lbs)	535	535	535	535	535
Ship Weight (lbs)	560	560	560	560	560

[1] Wire size should be determined in accordance with National Electrical Codes. Extensive wire runs will require larger wire sizes.
[2] May use fuses or HACR-type circuit breakers of the same size as noted.

Notes

- Always check the S&R plate for electrical data on the unit being installed.
- When a factory-installed powered convenience outlet is installed in the equipment, the unit MCA (Min. Circuit Ampacity) will increase by 7.5A for 208/230V units, increase by 3.75A for 460V units, and by 3A for 575V units. The MOP (Max. Overcurrent Protection) device must be sized accordingly.

Product Specifications — CPC060

	CPC060 ***1D***B*	CPC060 ***1D***C*	CPC060 ***3D***B*	CPC060 ***3D***C*	CPC060 ***3B***B*
Cooling Capacity					
Total BTU/h	59,500	58,000	59,500	58,000	59,500
Sensible BTU/h	43,200	42,800	43,200	42,800	43,200
SEER / EER	13 / 11.0	13 / 11.1	13 / 11.0	13 / 11.1	13 / 11.0
Decibels	78	78	78	78	78
ARI Reference #s	4385056	5368221	4385057	5368222	4385057
Evaporator Motor / Coil					
Motor Type	Direct	Direct	Direct	Direct	Belt
Indoor Nominal CFM	2,000	2,000	2,000	2,000	2,000
Expansion Device	Piston	Piston	Piston	Piston	Piston
Piston Size (Cooling)	0.086	0.086	0.086	0.086	0.086
Filter Size (")	(4) 14 x 20 x 2	(4) 14 x 20 x 2	(4) 14 x 20 x 2	(4) 14 x 20 x 2	(4) 14 x 20 x 2
Drain Size (NPT)	¾"	¾"	¾"	¾"	¾"
R-410A Refrigerant Charge (oz.)	162	100.8	162	100.8	162
Face Area (ft^2)	7.8	7.8	7.8	7.8	7.8
Rows Deep/ Fins per Inch	4 / 16	4 / 16	4 / 16	4 / 16	4 / 16
Tube Diameter - Material	5/16 - Copper	5/16 - Copper	5/16 - Copper	5/16 - Copper	5/16 - Copper
Evaporator Fan					
Standard Direct Drive (D x W) HP	(11" X 10") 1	(11" X 10") 1	(11" X 10") 1	(11" X 10") 1	---
Standard Belt Drive (D x W) HP	---	---	---	---	(11" X 10") 1
High-Static Belt Drive (D x W) HP	---	---	---	---	(11" X 10") 1½
Belt Drive Evap Fan Data					
# of Wheels (D x W)	---	---	---	---	1 (11" x 10")
Motor Sheave	---	---	---	---	VL44 x ⅝
Blower Sheave / Belt	---	---	---	---	AK61 x 1 / AX55
Condenser Fan / Coil					
Horsepower / RPM	¼ / 1,090	¼ / 1,090	¼ / 1,090	¼ / 1,090	¼ / 1,090
Fan Diameter/ # Fan Blades	22 / 4	22 / 4	22 / 4	22 / 4	22 / 4
Outdoor Nominal CFM	3,800	3,800	3,800	3,800	3,800
Face Area (ft^2)	17.0	13.0	17.0	13.0	17.0
Rows Deep/ Fins per Inch	2 / 18	2 / 27	2 / 18	2 / 27	2 / 18
Tube Diameter - Material	5/16 - Copper	5MM - Copper	5/16 - Copper	5MM - Copper	5/16 - Copper
Compressor					
Quantity / Stage	1 / Scroll	1 / Scroll	1 / Scroll	1 / Scroll	1 / Scroll
Type	Single	Single	Single	Single	Single
Compressor RLA / LRA	26.4 / 134	26.4 / 134	16 / 110	16 / 110	16 / 110
Electrical Data					
Voltage-Phase-Frequency	208/230-1-60	208/230-1-60	208/230-3-60	208/230-3-60	208/230-3-60
Indoor Blower HP / FLA	1.0 / 7.6	1.0 / 7.6	1.0 / 7.6	1.0 / 7.6	1.0 / 3.8
Indoor Blower LRA	24	24	----	----	24
Max External Static	0.9	0.9	0.9	0.9	1.0
Outdoor Fan HP / FLA	¼ / 1.40	¼ / 1.40	¼ / 1.40	¼ / 1.40	¼ / 1.40
Min. Circuit Ampacity[1]	42	42	29	29	25
Max. Overcurrent Protection (amps)[2]	60	60	45	45	40
Power Supply Conduit Hole	1.125"	1.125"	1.125"	1.125"	1.125"
Low-Voltage Conduit Hole	½"	½"	½"	½"	½"
Operating/Shipping Weight (lbs)	580/ 605	570/ 595	580/ 605	570/ 595	580/ 605

[1] Wire size should be determined in accordance with National Electrical Codes. Extensive wire runs will require larger wire sizes.
[2] May use fuses or HACR-type circuit breakers of the same size as noted.

Notes

- Always check the S&R plate for electrical data on the unit being installed.
- When a factory-installed powered convenience outlet is installed in the equipment, the unit MCA (Min. Circuit Ampacity) will increase by 7.5A for 208/230V units, increase by 3.75A for 460V units, and by 3A for 575V units. The MOP (Max. Overcurrent Protection) device must be sized accordingly.

Product Specifications — CPC060 (cont.)

	CPC060 ***3B***C*	CPC060 ***4B***B*	CPC060 ***4B***C*	CPC060 ***7B***B*	CPC060 ***7B***C*
Cooling Capacity					
Total BTU/h	58,000	59,500	58,000	59,500	58,000
Sensible BTU/h	42,800	43,200	42,800	43,200	42,800
SEER / EER	13 / 11.1	13 / 11.0	13 / 11.1	13 / 11.0	13 / 11.1
Decibels	78	78	78	78	78
ARI Reference #s	5368222	4385058	5368223	4397606	5368224
Evaporator Motor / Coil					
Motor Type	Belt	Belt	Belt	Belt	Belt
Indoor Nominal CFM	2,000	2,000	2,000	2,000	2,000
Expansion Device	Piston	Piston	Piston	Piston	Piston
Piston Size (Cooling)	0.086	0.086	0.086	0.082	0.086
Filter Size (")	(4) 14 x 20 x 2	(4) 14 x 20 x 2	(4) 14 x 20 x 2	(4) 14 x 20 x 2	(4) 14 x 20 x 2
Drain Size (NPT)	¾"	¾"	¾"	¾"	¾"
R-410A Refrigerant Charge (oz.)	100.8	162	100.8	162	100.8
Face Area (ft²)	7.8	7.8	7.8	7.8	7.8
Rows Deep/ Fins per Inch	4 / 16	4 / 16	4 / 16	4 / 16	4 / 16
Tube Diameter - Material	5/16 - Copper	5/16 - Copper	5/16 - Copper	5/16 - Copper	5/16 - Copper
Evaporator Fan					
Standard Belt Drive (D x W) HP	(11" X 10") 1	(11" X 10") 1	(11" X 10") 1	(11" X 10") 1½	(11" X 10") 1½
High-Static Belt Drive (D x W) HP	(11" X 10") 1½	(11" X 10") 1½	(11" X 10") 1½	(11" X 10") 1½	(11" X 10") 1½
Belt Drive Evap Fan Data					
# of Wheels (D x W)	1 (11" x 10")	1 (11" x 10")	1 (11" x 10")	1 (11" x 10")	1 (11" x 10")
Motor Sheave	VL44 x ⅝	VL44 x ⅝	VL44 x ⅝	VL44 x ⅝	VL44 x ⅝
Blower Sheave / Belt	AK61 x 1 / AX55	AK61 x 1 / AX55	AK61 x 1 / AX55	AK61 x 1 / AX55	AK61 x 1 / AX55
Condenser Fan / Coil					
Horsepower / RPM	¼ / 1,090	¼ / 1,090	¼ / 1,090	¼ / 1,075	¼ / 1,075
Fan Diameter/ # Fan Blades	22 / 4	22 / 4	22 / 4	22 / 4	22 / 4
Outdoor Nominal CFM	3,800	3,800	3,800	3,800	3,800
Face Area (ft²)	13.0	17.0	13.0	17.0	13.0
Rows Deep/ Fins per Inch	2 / 27	2 / 18	2 / 27	2 / 18	2 / 27
Tube Diameter - Material	5MM - Copper	5/16 - Copper	5MM - Copper	5/16 - Copper	5MM - Copper
Compressor					
Quantity / Stage	1 / Scroll	1 / Scroll	1 / Scroll	1 / Scroll	1 / Scroll
Type	Single	Single	Single	Single	Single
Compressor RLA / LRA	16 / 110	7.8 / 52	7.8 / 52	5.7 / 38.9	5.7 / 38.9
Electrical Data					
Voltage-Phase-Frequency	208/230-3-60	460-3-60	460-3-60	575-3-60	575-3-60
Indoor Blower HP / FLA	1.0 / 3.8	1.0 / 1.9	1.0 / 1.9	1.5 / 2.3	1.5 / 2.3
Indoor Blower LRA	24	12	12	12	12
Max External Static	1.0	1.0	1.0	1.0	1.0
Outdoor Fan HP / FLA	¼ / 1.40	¼ / 0.80	¼ / 0.80	¼ / 0.60	¼ / 0.60
Min. Circuit Ampacity[1]	25	12	12	10	10
Max. Overcurrent Protection (amps)[2]	40	20	20	15	15
Power Supply Conduit Hole	1.125"	1.125"	1.125"	1.125"	1.125"
Low-Voltage Conduit Hole	½"	½"	½"	½"	½"
Operating Weight (lbs)	570	580	570	580	570
Ship Weight (lbs)	595	605	595	605	595

[1] Wire size should be determined in accordance with National Electrical Codes. Extensive wire runs will require larger wire sizes.
[2] May use fuses or HACR-type circuit breakers of the same size as noted.

Notes

- Always check the S&R plate for electrical data on the unit being installed.
- When a factory-installed powered convenience outlet is installed in the equipment, the unit MCA (Min. Circuit Ampacity) will increase by 7.5A for 208/230V units, increase by 3.75A for 460V units, and by 3A for 575V units. The MOP (Max. Overcurrent Protection) device must be sized accordingly.

Product Specifications — CPC072

	CPC072 ***3B***B*	CPC072 ***3B***C*	CPC072 ***4B***B*	CPC072 ***4B***C*	CPC072 ***7B***B*	CPC072 ***7B***C*
Cooling Capacity						
Total BTU/h	71,000	71,000	71,000	71,000	71,000	71,000
Sensible BTU/h	48,280	49,800	48,280	49,800	48,280	49,800
EER / IEER	11.2 / 11.4	11.2 / 11.4	11.2 / 11.4	11.2 / 11.4	11.2 / 11.4	11.2 / 11.4
Decibels	78.0	78.0	78.0	78.0	78.0	78.0
AHRI Number	3397631	5582881	3397631	5582881	3397631	5582881
Evaporator Motor / Coil						
Motor Type	Belt Drive	Belt Drive	Belt Drive	Belt Drive	Belt Drive	Belt Drive
Wheel (D x W)	1 (11" x 10")	1 (11" x 10")	1 (11" x 10")	1 (11" x 10")	1 (11" x 10")	1 (11" x 10")
Indoor Nominal CFM	2,350	2,350	2,350	2,350	2,350	2,350
Indoor Motor FLA (Cooling)	5.0	5.0	2.5	2.5	2.3	2.3
Horsepower - RPM	1.5-1,725	1.5-1,725	1.5-1,725	1.5-1,725	1.5-1,725	1.5-1,725
Piston Size (Cooling)	0.094	0.094	0.094	0.094	0.094	0.094
Filter Size	(4) 16" x 20" x 2"	(4) 16" x 20" x 2"	(4) 16" x 20" x 2"	(4) 16" x 20" x 2"	(4) 16" x 20" x 2"	(4) 16" x 20" x 2"
Drain Size (NPT)	¾"	¾"	¾"	¾"	¾"	¾"
R-410A Refrigerant Charge Cir #1(oz.)	213.0	146.0	213.0	146.0	213.0	146.0
Evaporator Coil Face Area (ft^2)	8.9	8.9	8.9	8.9	8.9	8.9
Rows Deep/ Fins per Inch	4/ 16	4/ 16	4/ 16	4/ 16	4/ 16	4/ 16
Motor Sheave	VL44 X 7/8	VL44 X 7/8	VL44 X 7/8	VL44 X 7/8	VL44 X 7/8	VL44 X 7/8
Blower Sheave	AK59 X 1	AK59 X 1	AK59 X 1	AK59 X 1	AK59 X 1	AK59 X 1
Belt	AX53	AX53	AX53	AX53	AX53	AX53
Condenser Fan / Coil						
Quantity of condenser Fan Motors	1	1	1	1	1	1
Horsepower - RPM	⅓ - 1,075	⅓ - 1,075	⅓ - 1,075	⅓ - 1,075	⅓ - 1,075	⅓ - 1,075
Fan Diameter/ # Fan Blades	22/ 4	22/ 4	22/ 4	22/ 4	22/ 4	22/ 4
Outdoor Nominal CFM	4,200	4,200	4,200	4,200	4,200	4,200
Face Area (ft^2)	18.7	19	18.7	19	18.7	19
Rows Deep/ Fins per Inch	2/ 20	2 /27	2/ 20	2 /27	2/ 20	2 /27
Compressor						
Quantity / Type	1 / Scroll	1 / Scroll	1 / Scroll	1 / Scroll	1 / Scroll	1 / Scroll
Stage	Single	Single	Single	Single	Single	Single
Compressor RLA / LRA	19/123.0	19/123.0	9.7/62.0	9.7/62.0	7.4/50.0	7.4/50.0
Electrical Data						
Voltage/Phase/ Frequency	208-230/3/60	208-230/3/60	460/3/60	460/3/60	575/3/60	575/3/60
Quantity of Compressors	1	1	1	1	1	1
Belt-Driven Standard Max Static	1.0	1.0	1.0	1.0	1.0	1.0
Outdoor Fan FLA	1.90	1.90	1.20	1.20	0.90	0.90
Total Unit Amps	25.9	25.9	13.4	13.4	10.6	10.6
Min. Circuit Ampacity[1]	31	31	16	16	12	12
Max. Overcurrent Protection (amps)[2]	45	45	25	25	15	15
Entrance Power Supply	1.125"	1.125"	1.125"	1.125"	1.125"	1.125"
Entrance Control Voltage	½"	½"	½"	½"	½"	½"
Operating Weight (lbs)	640	625	640	625	640	625
Ship Weight (lbs)	665	650	665	650	665	650

[1] Wire size should be determined in accordance with National Electrical Codes. Extensive wire runs will require larger wire sizes.
[2] May use fuses or HACR-type circuit breakers of the same size as noted.

Notes

- Always check the S&R plate for electrical data on the unit being installed.
- When a factory-installed powered convenience outlet is installed in the equipment, the unit MCA (Min. Circuit Ampacity) will increase by 7.5A for 208/230V units, increase by 3.75A for 460V units, and by 3A for 575V units. The MOP (Max. Overcurrent Protection) device must be sized accordingly.

Expanded Cooling Data — CPC036

			Outdoor Ambient Temperature																							
			65°F				75°F				85°F				95°F				105°F				115°F			
			Entering Indoor Wet Bulb Temperature																							
IDB	Airflow		59	63	67	71	59	63	67	71	59	63	67	71	59	63	67	71	59	63	67	71	59	63	67	71
70	1350	MBh	33.9	35.1	38.5	-	33.1	34.3	37.6	-	32.3	33.5	36.7	-	31.5	32.7	35.8	-	30.0	31.1	34.0	-	27.8	28.8	31.5	-
		S/T	0.72	0.60	0.42	-	0.75	0.63	0.43	-	0.77	0.64	0.44	-	0.79	0.66	0.46	-	0.82	0.69	0.48	-	0.83	0.69	0.48	-
		ΔT	17	14	11	-	17	15	11	-	17	15	11	-	17	15	11	-	17	15	11	-	16	14	10	-
		kW	2.44	2.48	2.56	-	2.61	2.66	2.74	-	2.76	2.82	2.90	-	2.90	2.95	3.05	-	3.01	3.07	3.17	-	3.11	3.17	3.27	-
		Amps	8.5	8.7	8.9	-	9.0	9.2	9.4	-	9.6	9.8	10.0	-	10.1	10.3	10.5	-	10.6	10.8	11.0	-	11.1	11.3	11.6	-
		HI PR	221	237	251	-	247	266	281	-	281	303	320	-	321	345	364	-	361	388	410	-	398	429	453	-
		LO PR	107	114	124	-	113	120	131	-	118	125	137	-	124	131	144	-	130	138	150	-	134	143	156	-
	1200	MBh	32.9	34.1	37.4	-	32.2	33.3	36.5	-	31.4	32.5	35.6	-	30.6	31.7	34.8	-	29.1	30.2	33.0	-	26.9	27.9	30.6	-
		S/T	0.69	0.58	0.40	-	0.71	0.60	0.41	-	0.73	0.61	0.42	-	0.76	0.63	0.44	-	0.79	0.66	0.45	-	0.79	0.66	0.46	-
		ΔT	17	15	11	-	18	15	12	-	18	15	12	-	18	15	12	-	18	15	11	-	16	14	11	-
		kW	2.42	2.47	2.54	-	2.59	2.64	2.72	-	2.74	2.80	2.88	-	2.87	2.93	3.02	-	2.99	3.05	3.14	-	3.08	3.15	3.25	-
		Amps	8.5	8.6	8.8	-	8.9	9.1	9.3	-	9.5	9.7	9.9	-	10.0	10.2	10.4	-	10.5	10.7	11.0	-	11.0	11.2	11.5	-
		HI PR	218	235	248	-	245	264	278	-	279	300	317	-	317	342	361	-	357	384	406	-	394	425	448	-
		LO PR	106	113	123	-	112	119	130	-	116	124	135	-	122	130	142	-	128	136	149	-	133	141	154	-
	1050	MBh	30.4	31.5	34.5	-	29.7	30.8	33.7	-	29.0	30.0	32.9	-	28.3	29.3	32.1	-	26.9	27.8	30.5	-	24.9	25.8	28.2	-
		S/T	0.67	0.56	0.38	-	0.69	0.58	0.40	-	0.71	0.59	0.41	-	0.73	0.61	0.42	-	0.76	0.63	0.44	-	0.76	0.64	0.44	-
		ΔT	18	15	12	-	18	16	12	-	18	16	12	-	18	16	12	-	18	15	12	-	17	14	11	-
		kW	2.37	2.41	2.48	-	2.53	2.58	2.66	-	2.68	2.73	2.81	-	2.81	2.86	2.95	-	2.92	2.98	3.07	-	3.01	3.07	3.17	-
		Amps	8.3	8.4	8.6	-	8.8	8.9	9.1	-	9.3	9.5	9.7	-	9.8	10.0	10.2	-	10.3	10.5	10.7	-	10.7	10.9	11.2	-
		HI PR	212	228	241	-	238	256	270	-	270	291	307	-	308	331	350	-	346	373	394	-	383	412	435	-
		LO PR	103	109	120	-	109	116	126	-	113	120	131	-	119	126	138	-	124	132	144	-	129	137	149	-
75	1350	MBh	34.5	35.5	38.4	41.2	33.7	34.7	37.5	40.3	32.9	33.8	36.6	39.3	32.1	**33.0**	35.7	38.4	30.5	31.4	34.0	36.4	28.2	29.1	31.5	33.8
		S/T	0.82	0.74	0.56	0.36	0.85	0.76	0.58	0.37	0.87	0.78	0.59	0.38	0.90	**0.81**	0.61	0.39	0.94	0.84	0.63	0.41	0.94	0.84	0.64	0.41
		ΔT	19	18	15	10	20	18	15	10	20	18	15	10	20	**18**	15	10	19	18	15	10	18	17	14	9
		kW	2.46	2.50	2.58	2.65	2.63	2.68	2.76	2.85	2.78	2.84	2.93	3.02	2.92	**2.98**	3.07	3.17	3.03	3.10	3.19	3.29	3.13	3.20	3.30	3.40
		Amps	8.6	8.7	8.9	9.2	9.1	9.2	9.5	9.7	9.6	9.8	10.1	10.4	10.1	**10.3**	10.6	10.9	10.6	10.8	11.1	11.5	11.1	11.4	11.7	12.0
		HI PR	223	240	253	264	250	269	284	296	284	306	323	337	324	**348**	368	384	364	392	414	432	402	433	457	477
		LO PR	108	115	126	134	114	122	133	141	119	126	138	147	125	**133**	145	154	131	139	152	162	135	144	157	167
	1200	MBh	33.5	34.5	37.3	40.0	32.7	33.7	36.4	39.1	31.9	32.9	35.6	38.2	31.1	**32.1**	34.7	37.2	29.6	30.5	33.0	35.4	27.4	28.2	30.5	32.8
		S/T	0.78	0.70	0.53	0.34	0.81	0.73	0.55	0.35	0.83	0.75	0.56	0.36	0.86	**0.77**	0.58	0.37	0.89	0.80	0.60	0.39	0.90	0.81	0.61	0.39
		ΔT	20	19	15	10	20	19	15	11	20	19	15	11	21	**19**	15	11	20	19	15	11	19	17	14	10
		kW	2.44	2.49	2.56	2.63	2.61	2.66	2.74	2.82	2.76	2.82	2.90	2.99	2.90	**2.96**	3.05	3.14	3.01	3.07	3.17	3.27	3.11	3.17	3.27	3.38
		Amps	8.5	8.7	8.9	9.1	9.0	9.2	9.4	9.6	9.6	9.8	10.0	10.3	10.1	**10.3**	10.5	10.8	10.6	10.8	11.1	11.4	11.1	11.3	11.6	11.9
		HI PR	221	237	251	261	248	266	281	293	281	303	320	334	321	**345**	364	380	361	388	410	427	399	429	453	472
		LO PR	107	114	124	133	113	120	131	140	118	125	137	146	124	**131**	144	153	130	138	150	160	134	143	156	166
	1050	MBh	30.9	31.8	34.4	37.0	30.2	31.1	33.6	36.1	29.5	30.3	32.8	35.2	28.7	**29.6**	32.0	34.4	27.3	28.1	30.4	32.7	25.3	26.0	28.2	30.3
		S/T	0.76	0.68	0.51	0.33	0.78	0.70	0.53	0.34	0.80	0.72	0.54	0.35	0.83	**0.74**	0.56	0.36	0.86	0.77	0.58	0.37	0.87	0.78	0.59	0.38
		ΔT	20	19	15	11	21	19	16	11	21	19	16	11	21	**19**	16	11	21	19	16	11	19	18	15	10
		kW	2.38	2.43	2.50	2.57	2.55	2.60	2.68	2.76	2.70	2.75	2.84	2.92	2.83	**2.89**	2.97	3.07	2.94	3.00	3.09	3.19	3.03	3.10	3.19	3.30
		Amps	8.3	8.5	8.7	8.9	8.8	9.0	9.2	9.5	9.4	9.5	9.8	10.1	9.9	**10.0**	10.3	10.6	10.3	10.5	10.8	11.1	10.8	11.0	11.3	11.7
		HI PR	214	230	243	254	240	258	273	285	273	294	310	324	311	**335**	353	369	350	376	398	415	387	416	439	458
		LO PR	104	111	121	129	110	117	128	136	114	121	133	141	120	**128**	139	148	126	134	146	155	130	138	151	161

IDB = Entering Indoor Dry Bulb Temperature

Shaded area reflects ACCA (TVA) conditions

kW = Total system power

High and low pressures are measured at the liquid and suction service ports.

Amps: Unit amps (comp.+ evaporator + condenser fan motors)

Expanded Cooling Data — CPC036 (cont.)

			Outdoor Ambient Temperature																							
			65°F				75°F				85°F				95°F				105°F				115°F			
			Entering Indoor Wet Bulb Temperature																							
IDB	Airflow		59	63	67	71	59	63	67	71	59	63	67	71	59	63	67	71	59	63	67	71	59	63	67	71
80	1350	MBh	35.1	35.9	38.3	41.0	34.3	35.0	37.4	40.0	33.5	34.2	36.5	39.0	32.6	33.4	35.6	38.1	31.0	31.7	33.9	36.2	28.7	29.4	31.4	33.5
		S/T	0.90	0.85	0.69	0.51	0.93	0.88	0.71	0.53	0.96	0.90	0.73	0.55	1.00	0.93	0.75	0.56	1.00	0.96	0.78	0.59	1.00	0.97	0.79	0.59
		ΔT	22	21	18	14	22	21	18	15	22	21	18	15	22	21	18	15	21	21	18	14	20	19	17	13
		kW	2.47	2.52	2.60	2.67	2.65	2.70	2.78	2.87	2.80	2.86	2.95	3.04	2.94	3.00	3.09	3.19	3.06	3.12	3.22	3.32	3.16	3.22	3.33	3.43
		Amps	8.6	8.8	9.0	9.2	9.1	9.3	9.5	9.8	9.7	9.9	10.1	10.4	10.2	10.4	10.7	11.0	10.7	10.9	11.2	11.6	11.2	11.4	11.7	12.1
		HI PR	225	242	256	267	253	272	287	299	287	309	326	340	327	352	372	388	368	396	418	436	407	438	462	482
		LO PR	109	116	127	135	116	123	134	143	120	128	139	148	126	134	146	156	132	141	153	163	137	145	159	169
	1200	MBh	34.1	34.8	37.2	39.8	33.3	34.0	36.3	38.8	32.5	33.2	35.5	37.9	31.7	32.4	**34.6**	37.0	30.1	30.8	32.9	35.1	27.9	28.5	30.4	32.5
		S/T	0.86	0.81	0.66	0.49	0.89	0.84	0.68	0.51	0.91	0.86	0.70	0.52	0.94	0.88	**0.72**	0.54	0.98	0.92	0.75	0.56	0.99	0.93	0.75	0.56
		ΔT	22	22	19	15	23	22	19	15	23	22	19	15	23	22	**19**	15	23	22	19	15	21	20	18	14
		kW	2.46	2.50	2.58	2.65	2.63	2.68	2.76	2.85	2.78	2.84	2.93	3.02	2.92	2.98	**3.07**	3.17	3.03	3.10	3.19	3.29	3.13	3.20	3.30	3.40
		Amps	8.6	8.7	8.9	9.2	9.1	9.2	9.5	9.7	9.6	9.8	10.1	10.4	10.1	10.3	**10.6**	10.9	10.6	10.8	11.1	11.5	11.1	11.4	11.7	12.0
		HI PR	223	240	253	264	250	269	284	296	284	306	323	337	324	348	**368**	384	364	392	414	432	403	433	457	477
		LO PR	108	115	126	134	114	122	133	141	119	126	138	147	125	133	**145**	154	131	139	152	162	135	144	157	167
	1050	MBh	31.4	32.1	34.3	36.7	30.7	31.4	33.5	35.8	30.0	30.6	32.7	35.0	29.3	29.9	31.9	34.1	27.8	28.4	30.3	32.4	25.7	26.3	28.1	30.0
		S/T	0.83	0.78	0.63	0.47	0.86	0.81	0.66	0.49	0.88	0.83	0.67	0.50	0.91	0.85	0.69	0.52	0.94	0.89	0.72	0.54	0.95	0.89	0.73	0.54
		ΔT	23	22	19	15	23	22	19	15	23	22	19	15	23	22	19	16	23	22	19	15	21	21	18	14
		kW	2.40	2.45	2.52	2.59	2.57	2.62	2.70	2.78	2.72	2.77	2.86	2.95	2.85	2.91	3.00	3.09	2.96	3.02	3.12	3.22	3.06	3.12	3.22	3.32
		Amps	8.4	8.5	8.7	9.0	8.9	9.0	9.3	9.5	9.4	9.6	9.9	10.1	9.9	10.1	10.4	10.7	10.4	10.6	10.9	11.2	10.9	11.1	11.4	11.7
		HI PR	216	233	246	256	243	261	276	287	276	297	313	327	314	338	357	372	353	380	402	419	390	420	444	463
		LO PR	105	112	122	130	111	118	129	137	115	123	134	143	121	129	141	150	127	135	147	157	131	140	152	162
85	1350	MBh	35.7	36.4	38.1	40.7	34.9	35.6	37.2	39.7	34.0	34.7	36.3	38.8	33.2	33.9	35.5	37.8	31.6	32.2	33.7	35.9	29.2	29.8	31.2	33.3
		S/T	0.95	0.91	0.82	0.67	0.98	0.95	0.85	0.69	1.00	0.97	0.87	0.71	1.00	1.00	0.90	0.73	1.00	1.00	0.94	0.76	1.00	1.00	0.94	0.77
		ΔT	23	23	21	18	23	23	22	19	23	23	22	19	23	23	22	19	21	22	21	19	20	20	20	17
		kW	2.49	2.54	2.61	2.69	2.67	2.72	2.80	2.89	2.83	2.88	2.97	3.06	2.96	3.03	3.12	3.22	3.08	3.15	3.24	3.35	3.18	3.25	3.35	3.46
		Amps	8.7	8.8	9.0	9.3	9.2	9.4	9.6	9.9	9.8	10.0	10.2	10.5	10.3	10.5	10.8	11.1	10.8	11.0	11.3	11.6	11.3	11.5	11.8	12.2
		HI PR	227	245	258	269	255	274	290	302	290	312	330	344	330	356	375	392	372	400	422	440	411	442	467	487
		LO PR	110	117	128	137	117	124	135	144	121	129	141	150	127	135	148	158	133	142	155	165	138	147	160	171
	1200	MBh	34.7	35.3	37.0	39.5	33.9	34.5	36.1	38.6	33.1	33.7	35.3	37.6	32.2	32.9	34.4	36.7	30.6	31.2	32.7	34.9	28.4	28.9	30.3	32.3
		S/T	0.90	0.87	0.79	0.64	0.93	0.90	0.81	0.66	0.96	0.92	0.83	0.68	0.99	0.95	0.86	0.70	1.00	0.99	0.89	0.73	1.00	1.00	0.90	0.73
		ΔT	24	24	22	19	24	24	23	20	24	24	23	20	24	24	23	20	23	24	22	19	22	22	21	18
		kW	2.47	2.52	2.60	2.67	2.65	2.70	2.78	2.87	2.80	2.86	2.95	3.04	2.94	3.00	3.09	3.19	3.06	3.12	3.22	3.32	3.16	3.22	3.33	3.43
		Amps	8.6	8.8	9.0	9.2	9.1	9.3	9.5	9.8	9.7	9.9	10.1	10.4	10.2	10.4	10.7	11.0	10.7	10.9	11.2	11.6	11.2	11.4	11.7	12.1
		HI PR	225	242	256	267	253	272	287	299	287	309	326	340	327	352	372	388	368	396	418	436	407	438	462	482
		LO PR	109	116	127	135	116	123	134	143	120	128	139	148	126	134	146	156	132	141	153	163	137	145	159	169
	1050	MBh	32.0	32.6	34.2	36.4	31.3	31.9	33.4	35.6	30.5	31.1	32.6	34.7	29.8	30.3	31.8	33.9	28.3	28.8	30.2	32.2	26.2	26.7	28.0	29.8
		S/T	0.87	0.84	0.76	0.61	0.90	0.87	0.78	0.64	0.92	0.89	0.80	0.65	0.95	0.92	0.83	0.67	0.99	0.95	0.86	0.70	1.00	0.96	0.87	0.71
		ΔT	24	24	23	20	25	24	23	20	25	24	23	20	25	24	23	20	25	24	23	20	23	23	21	18
		kW	2.42	2.47	2.54	2.61	2.59	2.64	2.72	2.80	2.74	2.80	2.88	2.97	2.87	2.93	3.02	3.12	2.99	3.05	3.14	3.24	3.08	3.15	3.25	3.35
		Amps	8.5	8.6	8.8	9.0	8.9	9.1	9.3	9.6	9.5	9.7	9.9	10.2	10.0	10.2	10.4	10.8	10.5	10.7	11.0	11.3	11.0	11.2	11.5	11.8
		HI PR	218	235	248	259	245	264	278	290	279	300	317	330	317	341	361	376	357	384	406	423	394	424	448	467
		LO PR	106	113	123	131	112	119	130	139	116	124	135	144	122	130	142	151	128	136	149	159	133	141	154	164

IDB = Entering Indoor Dry Bulb Temperature

Shaded area reflects AHRI Ratings conditions

kW = Total system power

High and low pressures are measured at the liquid and suction service ports.

Amps: Unit amps (comp.+ evaporator + condenser fan motors)

Expanded Cooling Data — CPC048

			Outdoor Ambient Temperature																							
			65°F				75°F				85°F				95°F				105°F				115°F			
			Entering Indoor Wet Bulb Temperature																							
IDB	Airflow		59	63	67	71	59	63	67	71	59	63	67	71	59	63	67	71	59	63	67	71	59	63	67	71
70	1800	MBh	44.6	46.2	50.6	-	43.5	45.1	49.5	-	42.5	44.1	48.3	-	41.5	43.0	47.1	-	39.4	40.8	44.7	-	36.5	37.8	41.4	-
		S/T	0.74	0.62	0.43	-	0.77	0.64	0.44	-	0.79	0.66	0.45	-	0.81	0.68	0.47	-	0.84	0.70	0.49	-	0.85	0.71	0.49	-
		ΔT	17	15	11	-	17	15	11	-	17	15	11	-	17	15	11	-	17	15	11	-	16	14	10	-
		kW	3.13	3.19	3.29	-	3.36	3.43	3.53	-	3.56	3.63	3.75	-	3.74	3.82	3.94	-	3.89	3.97	4.10	-	4.02	4.10	4.23	-
		Amps	10.2	10.4	10.6	-	10.8	11.0	11.3	-	11.5	11.7	12.0	-	12.1	12.3	12.6	-	12.7	12.9	13.3	-	13.3	13.5	13.9	-
		HI PR	239	257	271	-	268	288	304	-	305	328	346	-	347	373	394	-	390	420	444	-	431	464	490	-
		LO PR	110	117	128	-	116	124	135	-	121	129	141	-	127	135	148	-	133	142	155	-	138	147	160	-
	1600	MBh	43.3	44.9	49.2	-	42.3	43.8	48.0	-	41.3	42.8	46.9	-	40.3	41.7	45.7	-	38.3	39.6	43.4	-	35.4	36.7	40.2	-
		S/T	0.70	0.59	0.41	-	0.73	0.61	0.42	-	0.75	0.63	0.43	-	0.77	0.65	0.45	-	0.80	0.67	0.46	-	0.81	0.68	0.47	-
		ΔT	18	15	12	-	18	15	12	-	18	15	12	-	18	15	12	-	18	15	12	-	16	14	11	-
		kW	3.11	3.17	3.27	-	3.33	3.40	3.51	-	3.53	3.61	3.72	-	3.71	3.79	3.90	-	3.86	3.94	4.06	-	3.99	4.07	4.20	-
		Amps	10.1	10.3	10.6	-	10.7	10.9	11.2	-	11.4	11.6	11.9	-	12.0	12.2	12.5	-	12.6	12.8	13.2	-	13.2	13.4	13.8	-
		HI PR	236	254	269	-	265	285	301	-	302	325	343	-	344	370	390	-	386	416	439	-	427	460	485	-
		LO PR	109	116	127	-	115	123	134	-	120	128	139	-	126	134	146	-	132	140	153	-	136	145	158	-
	1400	MBh	40.0	41.4	45.4	-	39.0	40.4	44.3	-	38.1	39.5	43.3	-	37.2	38.5	42.2	-	35.3	36.6	40.1	-	32.7	33.9	37.1	-
		S/T	0.68	0.57	0.39	-	0.70	0.59	0.41	-	0.72	0.60	0.42	-	0.75	0.62	0.43	-	0.77	0.65	0.45	-	0.78	0.65	0.45	-
		ΔT	18	15	12	-	18	16	12	-	18	16	12	-	18	16	12	-	18	16	12	-	17	15	11	-
		kW	3.04	3.10	3.19	-	3.26	3.32	3.42	-	3.45	3.52	3.63	-	3.62	3.70	3.81	-	3.76	3.84	3.97	-	3.89	3.97	4.10	-
		Amps	9.9	10.1	10.3	-	10.5	10.7	11.0	-	11.2	11.4	11.7	-	11.7	12.0	12.3	-	12.3	12.6	12.9	-	12.9	13.1	13.5	-
		HI PR	229	247	261	-	257	277	292	-	293	315	332	-	333	359	379	-	375	403	426	-	414	446	471	-
		LO PR	106	113	123	-	112	119	130	-	116	124	135	-	122	130	142	-	128	136	149	-	132	141	154	-
75	1800	MBh	45.3	46.7	50.5	54.2	44.3	45.6	49.4	53.0	43.2	44.5	48.2	51.7	42.2	**43.4**	47.0	50.4	40.1	41.3	44.7	47.9	37.1	38.2	41.4	44.4
		S/T	0.84	0.75	0.57	0.37	0.87	0.78	0.59	0.38	0.89	0.80	0.60	0.39	0.92	**0.82**	0.62	0.40	0.96	0.86	0.65	0.42	0.96	0.86	0.65	0.42
		ΔT	19	18	15	10	20	18	15	10	20	18	15	10	20	**18**	15	10	20	18	15	10	18	17	14	10
		kW	3.16	3.22	3.32	3.42	3.39	3.46	3.56	3.67	3.59	3.66	3.78	3.90	3.77	**3.85**	3.97	4.09	3.92	4.00	4.13	4.26	4.05	4.14	4.27	4.41
		Amps	10.3	10.4	10.7	11.0	10.9	11.1	11.3	11.7	11.6	11.8	12.1	12.4	12.2	**12.4**	12.7	13.1	12.8	13.0	13.4	13.8	13.4	13.6	14.0	14.4
		HI PR	241	260	274	286	271	291	307	321	308	331	350	365	351	**377**	398	415	394	424	448	467	436	469	495	516
		LO PR	111	118	129	138	118	125	137	146	122	130	142	151	128	**137**	149	159	135	143	156	167	139	148	162	172
	1600	MBh	44.0	45.3	49.1	52.7	43.0	44.3	47.9	51.4	42.0	43.2	46.8	50.2	41.0	**42.2**	45.6	49.0	38.9	40.1	43.4	46.5	36.0	37.1	40.2	43.1
		S/T	0.80	0.72	0.54	0.35	0.83	0.74	0.56	0.36	0.85	0.76	0.58	0.37	0.88	**0.79**	0.59	0.38	0.91	0.82	0.62	0.40	0.92	0.82	0.62	0.40
		ΔT	20	19	15	11	21	19	15	11	21	19	15	11	21	**19**	16	11	20	19	15	11	19	18	14	10
		kW	3.13	3.20	3.29	3.39	3.36	3.43	3.53	3.64	3.56	3.63	3.75	3.87	3.74	**3.82**	3.94	4.06	3.89	3.97	4.10	4.23	4.02	4.10	4.24	4.37
		Amps	10.2	10.4	10.6	10.9	10.8	11.0	11.3	11.6	11.5	11.7	12.0	12.3	12.1	**12.3**	12.6	13.0	12.7	12.9	13.3	13.7	13.3	13.5	13.9	14.3
		HI PR	239	257	271	283	268	288	304	318	305	328	346	361	347	**373**	394	411	390	420	444	463	431	464	490	511
		LO PR	110	117	128	136	116	124	135	144	121	129	141	150	127	**135**	148	157	133	142	155	165	138	147	160	171
	1400	MBh	40.6	41.8	45.3	48.6	39.7	40.9	44.2	47.5	38.7	39.9	43.2	46.3	37.8	**38.9**	42.1	45.2	35.9	37.0	40.0	42.9	33.3	34.2	37.1	39.8
		S/T	0.77	0.69	0.52	0.34	0.80	0.72	0.54	0.35	0.82	0.73	0.56	0.36	0.85	**0.76**	0.57	0.37	0.88	0.79	0.60	0.38	0.89	0.79	0.60	0.39
		ΔT	21	19	16	11	21	19	16	11	21	19	16	11	21	**19**	16	11	21	19	16	11	19	18	15	10
		kW	3.06	3.12	3.22	3.31	3.28	3.35	3.45	3.56	3.48	3.55	3.66	3.77	3.65	**3.73**	3.84	3.96	3.80	3.88	4.00	4.13	3.92	4.00	4.13	4.27
		Amps	10.0	10.2	10.4	10.7	10.6	10.8	11.0	11.3	11.3	11.5	11.7	12.1	11.8	**12.1**	12.4	12.7	12.4	12.6	13.0	13.4	13.0	13.2	13.6	14.0
		HI PR	232	249	263	275	260	280	295	308	296	318	336	350	337	**362**	383	399	379	408	430	449	418	450	475	496
		LO PR	107	114	124	132	113	120	131	140	117	125	136	145	123	**131**	143	153	129	138	150	160	134	142	155	165

IDB = Entering Indoor Dry Bulb Temperature

Shaded area reflects ACCA (TVA) conditions

kW = Total system power

High and low pressures are measured at the liquid and suction service ports.

Amps: Unit amps (comp.+ evaporator + condenser fan motors)

Expanded Cooling Data — CPC048 (cont.)

IDB	Airflow		Outdoor Ambient Temperature 65°F				75°F				85°F				95°F				105°F				115°F			
			Entering Indoor Wet Bulb Temperature																							
			59	63	67	71	59	63	67	71	59	63	67	71	59	63	67	71	59	63	67	71	59	63	67	71
80	1800	MBh	46.1	47.2	50.4	53.9	45.1	46.1	49.2	52.6	44.0	45.0	48.0	51.4	42.9	43.9	46.9	50.1	40.8	41.7	44.5	47.6	37.8	38.6	41.2	44.1
		S/T	0.92	0.86	0.70	0.53	0.95	0.90	0.73	0.54	1.00	0.92	0.75	0.56	1.00	0.95	0.77	0.58	1.00	1.00	0.80	0.60	1.00	1.00	0.81	0.60
		ΔT	22	21	18	14	22	21	18	15	22	21	18	15	22	21	18	15	21	21	18	15	19	20	17	14
		kW	3.18	3.24	3.34	3.44	3.41	3.48	3.59	3.70	3.62	3.69	3.81	3.93	3.80	3.88	4.00	4.13	3.95	4.04	4.16	4.30	4.08	4.17	4.31	4.45
		Amps	10.3	10.5	10.8	11.1	10.9	11.1	11.4	11.7	11.7	11.9	12.2	12.5	12.3	12.5	12.8	13.2	12.9	13.1	13.5	13.9	13.5	13.7	14.1	14.5
		HI PR	244	262	277	289	273	294	311	324	311	335	353	368	354	381	402	420	398	429	453	472	440	474	500	522
		LO PR	112	120	131	139	119	126	138	147	124	131	143	153	130	138	151	160	136	145	158	168	141	150	163	174
	1600	MBh	44.8	45.8	48.9	52.3	43.8	44.7	47.8	51.1	42.7	43.7	46.6	49.9	41.7	42.6	**45.5**	48.6	39.6	40.5	43.2	46.2	36.7	37.5	40.0	42.8
		S/T	0.88	0.82	0.67	0.50	0.91	0.85	0.70	0.52	0.93	0.88	0.71	0.53	0.96	0.90	**0.74**	0.55	1.00	0.94	0.76	0.57	1.00	0.95	0.77	0.58
		ΔT	23	22	19	15	23	22	19	15	23	22	19	15	23	22	**19**	15	23	22	19	15	21	20	18	14
		kW	3.16	3.22	3.32	3.42	3.39	3.46	3.56	3.67	3.59	3.66	3.78	3.90	3.77	3.85	**3.97**	4.10	3.92	4.00	4.13	4.26	4.05	4.14	4.27	4.41
		Amps	10.3	10.4	10.7	11.0	10.9	11.1	11.3	11.7	11.6	11.8	12.1	12.4	12.2	12.4	**12.7**	13.1	12.8	13.0	13.4	13.8	13.4	13.6	14.0	14.4
		HI PR	241	260	274	286	271	291	308	321	308	331	350	365	351	377	**398**	415	394	424	448	467	436	469	495	516
		LO PR	111	118	129	138	118	125	137	146	122	130	142	151	128	137	**149**	159	135	143	156	167	139	148	162	172
	1400	MBh	41.4	42.3	45.1	48.3	40.4	41.3	44.1	47.1	39.4	40.3	43.0	46.0	38.5	39.3	42.0	44.9	36.5	37.3	39.9	42.6	33.9	34.6	37.0	39.5
		S/T	0.85	0.79	0.65	0.48	0.88	0.82	0.67	0.50	0.90	0.84	0.69	0.51	0.93	0.87	0.71	0.53	0.96	0.90	0.74	0.55	0.97	0.91	0.74	0.55
		ΔT	23	22	19	15	23	22	19	16	23	22	19	16	23	22	20	16	23	22	19	15	22	21	18	14
		kW	3.09	3.15	3.24	3.34	3.31	3.38	3.48	3.59	3.50	3.58	3.69	3.80	3.68	3.76	3.87	4.00	3.83	3.91	4.03	4.16	3.95	4.04	4.17	4.30
		Amps	10.1	10.2	10.5	10.8	10.7	10.8	11.1	11.4	11.3	11.5	11.8	12.2	11.9	12.1	12.4	12.8	12.5	12.7	13.1	13.5	13.1	13.3	13.7	14.1
		HI PR	234	252	266	277	263	282	298	311	299	321	339	354	340	366	386	403	383	412	435	453	423	455	480	501
		LO PR	108	115	125	134	114	121	133	141	119	126	138	147	125	133	145	154	131	139	152	162	135	144	157	167
85	1800	MBh	47.0	47.9	50.1	53.5	45.9	46.7	49.0	52.2	44.8	45.6	47.8	51.0	43.7	44.5	46.6	49.7	41.5	42.3	44.3	47.3	38.4	39.2	41.0	43.8
		S/T	0.97	0.93	0.84	0.68	1.00	0.97	0.87	0.71	1.00	0.99	0.89	0.73	1.00	1.00	0.92	0.75	1.00	1.00	0.96	0.78	1.00	1.00	0.97	0.78
		ΔT	23	23	22	19	23	23	22	19	23	23	22	19	22	23	22	19	21	22	22	19	20	20	20	18
		kW	3.20	3.27	3.37	3.47	3.44	3.51	3.62	3.73	3.65	3.72	3.84	3.96	3.83	3.91	4.03	4.16	3.98	4.07	4.20	4.33	4.12	4.21	4.34	4.48
		Amps	10.4	10.6	10.8	11.1	11.0	11.2	11.5	11.8	11.7	11.9	12.3	12.6	12.3	12.6	12.9	13.3	13.0	13.2	13.6	14.0	13.6	13.8	14.2	14.6
		HI PR	246	265	280	292	276	297	314	327	314	338	357	372	358	385	406	424	402	433	457	477	444	478	505	527
		LO PR	114	121	132	141	120	128	139	148	125	133	145	154	131	139	152	162	137	146	160	170	142	151	165	176
	1600	MBh	45.6	46.5	48.7	51.9	44.5	45.4	47.5	50.7	43.5	44.3	46.4	49.5	42.4	43.2	45.3	48.3	40.3	41.1	43.0	45.9	37.3	38.0	39.8	42.5
		S/T	0.92	0.89	0.80	0.65	0.95	0.92	0.83	0.67	0.98	0.94	0.85	0.69	1.00	0.97	0.88	0.71	1.00	1.00	0.91	0.74	1.00	1.00	0.92	0.75
		ΔT	24	24	22	19	24	24	23	20	24	24	23	20	24	24	23	20	23	24	23	20	21	22	21	18
		kW	3.18	3.24	3.34	3.44	3.41	3.48	3.59	3.70	3.62	3.69	3.81	3.93	3.80	3.88	4.00	4.13	3.95	4.04	4.16	4.30	4.08	4.17	4.31	4.45
		Amps	10.3	10.5	10.8	11.1	10.9	11.1	11.4	11.7	11.7	11.9	12.2	12.5	12.3	12.5	12.8	13.2	12.9	13.1	13.5	13.9	13.5	13.7	14.1	14.5
		HI PR	244	262	277	289	273	294	311	324	311	335	353	368	354	381	402	420	398	429	453	472	440	474	500	522
		LO PR	112	120	131	139	119	126	138	147	124	131	143	153	130	138	151	160	136	145	158	168	141	150	163	174
	1400	MBh	42.1	42.9	44.9	47.9	41.1	41.9	43.9	46.8	40.1	40.9	42.8	45.7	39.1	39.9	41.8	44.6	37.2	37.9	39.7	42.4	34.4	35.1	36.8	39.2
		S/T	0.89	0.86	0.77	0.63	0.92	0.89	0.80	0.65	0.94	0.91	0.82	0.67	0.97	0.94	0.85	0.69	1.00	0.98	0.88	0.71	1.00	0.98	0.89	0.72
		ΔT	25	24	23	20	25	24	23	20	25	24	23	20	25	25	23	20	24	24	23	20	23	23	21	19
		kW	3.11	3.17	3.26	3.36	3.33	3.40	3.50	3.61	3.53	3.61	3.72	3.83	3.71	3.78	3.90	4.03	3.86	3.94	4.06	4.19	3.98	4.07	4.20	4.34
		Amps	10.1	10.3	10.6	10.8	10.7	10.9	11.2	11.5	11.4	11.6	11.9	12.3	12.0	12.2	12.5	12.9	12.6	12.8	13.2	13.6	13.2	13.4	13.8	14.2
		HI PR	236	254	269	280	265	285	301	314	302	324	343	357	343	370	390	407	386	416	439	458	427	459	485	506
		LO PR	109	116	127	135	115	123	134	143	120	127	139	148	126	134	146	156	132	140	153	163	136	145	158	169

IDB = Entering Indoor Dry Bulb Temperature

Shaded area reflects AHRI Ratings conditions

kW = Total system power

High and low pressures are measured at the liquid and suction service ports.

Amps: Unit amps (comp.+ evaporator + condenser fan motors)

Expanded Cooling Data — CPC060 B Models

			Outdoor Ambient Temperature																							
			65°F				75°F				85°F				95°F				105°F				115°F			
			Entering Indoor Wet Bulb Temperature																							
IDB	Airflow		59	63	67	71	59	63	67	71	59	63	67	71	59	63	67	71	59	63	67	71	59	63	67	71
70	2250	MBh	58.3	60.4	66.2	-	56.9	59.0	64.7	-	55.6	57.6	63.1	-	54.2	56.2	61.6	-	51.5	53.4	58.5	-	47.7	49.5	54.2	-
		S/T	0.73	0.61	0.42	-	0.75	0.63	0.44	-	0.77	0.65	0.45	-	0.80	0.67	0.46	-	0.83	0.69	0.48	-	0.84	0.70	0.48	-
		ΔT	17	15	11	-	18	15	12	-	18	15	12	-	18	15	12	-	17	15	11	-	16	14	11	-
		kW	3.97	4.06	4.18	-	4.27	4.36	4.50	-	4.54	4.64	4.78	-	4.77	4.88	5.03	-	4.97	5.08	5.25	-	5.14	5.25	5.43	-
		Amps	12.4	12.7	13.0	-	13.3	13.5	13.9	-	14.2	14.5	14.9	-	15.0	15.3	15.7	-	15.8	16.1	16.6	-	16.6	17.0	17.5	-
		HI PR	244	262	277	-	273	294	311	-	311	335	353	-	354	381	402	-	398	429	453	-	440	474	500	-
		LO PR	107	114	124	-	113	120	131	-	118	125	137	-	124	131	144	-	130	138	150	-	134	143	156	-
	2000	MBh	56.6	58.7	64.3	-	55.3	57.3	62.8	-	54.0	55.9	61.3	-	52.7	54.6	59.8	-	50.0	51.8	56.8	-	46.3	48.0	52.6	-
		S/T	0.69	0.58	0.40	-	0.72	0.60	0.42	-	0.74	0.62	0.43	-	0.76	0.64	0.44	-	0.79	0.66	0.46	-	0.80	0.67	0.46	-
		ΔT	18	16	12	-	18	16	12	-	18	16	12	-	18	16	12	-	18	16	12	-	17	15	11	-
		kW	3.94	4.02	4.15	-	4.24	4.33	4.47	-	4.50	4.60	4.75	-	4.73	4.84	4.99	-	4.93	5.04	5.20	-	5.10	5.21	5.38	-
		Amps	12.4	12.6	12.9	-	13.2	13.4	13.8	-	14.1	14.4	14.8	-	14.9	15.2	15.6	-	15.7	16.0	16.5	-	16.5	16.8	17.3	-
		HI PR	241	260	274	-	271	291	308	-	308	331	350	-	351	377	398	-	394	424	448	-	436	469	495	-
		LO PR	106	113	123	-	112	119	130	-	116	124	135	-	122	130	142	-	128	136	149	-	133	141	154	-
	1750	MBh	52.2	54.2	59.3	-	51.0	52.9	58.0	-	49.8	51.6	56.6	-	48.6	50.4	55.2	-	46.2	47.9	52.4	-	42.8	44.3	48.6	-
		S/T	0.67	0.56	0.39	-	0.69	0.58	0.40	-	0.71	0.59	0.41	-	0.73	0.61	0.42	-	0.76	0.64	0.44	-	0.77	0.64	0.44	-
		ΔT	18	16	12	-	19	16	12	-	19	16	12	-	19	16	12	-	18	16	12	-	17	15	11	-
		kW	3.85	3.93	4.05	-	4.14	4.23	4.36	-	4.39	4.49	4.63	-	4.62	4.72	4.87	-	4.81	4.91	5.07	-	4.97	5.08	5.25	-
		Amps	12.1	12.3	12.6	-	12.9	13.1	13.5	-	13.8	14.0	14.4	-	14.5	14.8	15.3	-	15.3	15.6	16.1	-	16.1	16.4	16.9	-
		HI PR	234	252	266	-	263	283	298	-	299	321	339	-	340	366	386	-	383	412	435	-	423	455	480	-
		LO PR	103	109	120	-	109	116	126	-	113	120	131	-	119	126	138	-	124	132	144	-	129	137	149	-
75	2250	MBh	59.3	61.0	66.1	70.9	57.9	59.6	64.5	69.3	56.5	58.2	63.0	67.6	55.2	**56.8**	61.5	66.0	52.4	53.9	58.4	62.7	48.5	50.0	54.1	58.1
		S/T	0.83	0.74	0.56	0.36	0.86	0.77	0.58	0.37	0.88	0.79	0.60	0.38	0.91	**0.81**	0.61	0.40	0.94	0.84	0.64	0.41	0.95	0.85	0.64	0.41
		ΔT	20	18	15	10	20	19	15	11	20	19	15	11	20	**19**	15	11	20	19	15	11	19	17	14	10
		kW	4.01	4.09	4.22	4.35	4.31	4.40	4.54	4.68	4.58	4.67	4.82	4.98	4.81	**4.92**	5.08	5.24	5.01	5.12	5.29	5.47	5.18	5.30	5.47	5.66
		Amps	12.5	12.8	13.1	13.5	13.4	13.6	14.0	14.4	14.3	14.6	15.0	15.5	15.1	**15.4**	15.9	16.4	15.9	16.3	16.7	17.3	16.7	17.1	17.6	18.2
		HI PR	246	265	280	292	276	297	314	327	314	338	357	372	358	**385**	406	424	402	433	457	477	445	478	505	527
		LO PR	108	115	126	134	114	122	133	141	119	126	138	147	125	**133**	145	154	131	139	152	162	135	144	157	167
	2000	MBh	57.6	59.3	64.2	68.9	56.2	57.9	62.7	67.3	54.9	56.5	61.2	65.7	53.6	**55.1**	59.7	64.1	50.9	52.4	56.7	60.8	47.1	48.5	52.5	56.4
		S/T	0.79	0.71	0.53	0.34	0.82	0.73	0.55	0.36	0.84	0.75	0.57	0.37	0.87	**0.77**	0.59	0.38	0.90	0.80	0.61	0.39	0.91	0.81	0.61	0.39
		ΔT	21	19	16	11	21	19	16	11	21	19	16	11	21	**20**	16	11	21	19	16	11	20	18	15	10
		kW	3.97	4.06	4.18	4.31	4.27	4.36	4.50	4.65	4.54	4.64	4.78	4.94	4.77	**4.88**	5.03	5.20	4.97	5.08	5.25	5.42	5.14	5.26	5.43	5.61
		Amps	12.4	12.7	13.0	13.4	13.3	13.5	13.9	14.3	14.2	14.5	14.9	15.4	15.0	**15.3**	15.7	16.3	15.8	16.1	16.6	17.2	16.6	17.0	17.5	18.0
		HI PR	244	262	277	289	273	294	311	324	311	335	353	369	354	**381**	402	420	398	429	453	472	440	474	500	522
		LO PR	107	114	124	133	113	120	131	140	118	125	137	146	124	**131**	144	153	130	138	150	160	134	143	156	166
	1750	MBh	53.1	54.7	59.2	63.6	51.9	53.4	57.8	62.1	50.7	52.2	56.5	60.6	49.4	**50.9**	55.1	59.1	47.0	48.3	52.3	56.2	43.5	44.8	48.5	52.0
		S/T	0.76	0.68	0.52	0.33	0.79	0.71	0.53	0.34	0.81	0.72	0.55	0.35	0.83	**0.75**	0.57	0.36	0.87	0.77	0.59	0.38	0.87	0.78	0.59	0.38
		ΔT	21	20	16	11	22	20	16	11	22	20	16	11	22	**20**	16	11	21	20	16	11	20	18	15	10
		kW	3.88	3.96	4.08	4.21	4.17	4.26	4.39	4.53	4.43	4.52	4.67	4.82	4.66	**4.76**	4.91	5.07	4.85	4.95	5.11	5.28	5.01	5.12	5.29	5.47
		Amps	12.2	12.4	12.7	13.1	13.0	13.2	13.6	14.0	13.9	14.1	14.5	15.0	14.7	**15.0**	15.4	15.9	15.4	15.8	16.2	16.7	16.2	16.6	17.0	17.6
		HI PR	236	254	269	280	265	285	301	314	302	325	343	357	344	**370**	390	407	386	416	439	458	427	460	485	506
		LO PR	104	111	121	129	110	117	128	136	114	121	133	141	120	**128**	139	148	126	134	146	155	130	138	151	161

IDB = Entering Indoor Dry Bulb Temperature

Shaded area reflects ACCA (TVA) conditions

kW = Total system power

High and low pressures are measured at the liquid and suction service ports.

Amps: Unit amps (comp.+ evaporator + condenser fan motors)

Expanded Cooling Data — CPC060 B Models (cont.)

			Outdoor Ambient Temperature																							
			65°F				75°F				85°F				95°F				105°F				115°F			
			Entering Indoor Wet Bulb Temperature																							
IDB	Airflow		59	63	67	71	59	63	67	71	59	63	67	71	59	63	67	71	59	63	67	71	59	63	67	71
80	2250	MBh	60.3	61.7	65.9	70.4	58.9	60.2	64.3	68.8	57.5	58.8	62.8	67.2	56.1	57.4	61.3	65.5	53.3	54.5	58.2	62.2	49.4	50.5	53.9	57.7
		S/T	0.91	0.85	0.69	0.52	0.94	0.88	0.72	0.54	0.96	0.90	0.74	0.55	1.00	0.93	0.76	0.57	1.00	0.97	0.79	0.59	1.00	1.00	0.80	0.59
		ΔT	22	21	19	15	23	22	19	15	23	22	19	15	23	22	19	15	22	22	19	15	20	21	18	14
		kW	4.04	4.12	4.25	4.38	4.34	4.43	4.58	4.72	4.61	4.71	4.86	5.02	4.85	4.96	5.12	5.29	5.05	5.16	5.33	5.51	5.23	5.34	5.52	5.71
		Amps	12.6	12.9	13.2	13.6	13.5	13.7	14.1	14.5	14.4	14.7	15.1	15.6	15.2	15.6	16.0	16.5	16.1	16.4	16.9	17.4	16.9	17.2	17.7	18.3
		HI PR	249	267	282	295	279	300	317	331	317	341	360	376	361	389	411	428	406	437	462	482	449	483	510	532
		LO PR	109	116	127	135	116	123	134	143	120	128	139	148	126	134	146	156	132	141	153	163	137	145	159	169
	2000	MBh	58.6	59.9	64.0	68.4	57.2	58.5	62.5	66.8	55.9	57.1	61.0	65.2	54.5	55.7	**59.5**	63.6	51.8	52.9	56.5	60.4	48.0	49.0	52.4	56.0
		S/T	0.87	0.81	0.66	0.49	0.90	0.84	0.68	0.51	0.92	0.86	0.70	0.52	0.95	0.89	**0.72**	0.54	0.99	0.92	0.75	0.56	0.99	0.93	0.76	0.57
		ΔT	23	22	19	16	24	23	20	16	24	23	20	16	24	23	**20**	16	23	22	20	16	22	21	18	15
		kW	4.01	4.09	4.22	4.35	4.31	4.40	4.54	4.69	4.58	4.67	4.82	4.98	4.81	4.92	**5.08**	5.24	5.01	5.12	5.29	5.47	5.19	5.30	5.47	5.66
		Amps	12.5	12.8	13.1	13.5	13.4	13.6	14.0	14.4	14.3	14.6	15.0	15.5	15.1	15.4	**15.9**	16.4	15.9	16.3	16.7	17.3	16.8	17.1	17.6	18.2
		HI PR	246	265	280	292	276	297	314	327	314	338	357	372	358	385	**407**	424	402	433	457	477	445	478	505	527
		LO PR	108	115	126	134	114	122	133	141	119	126	138	147	125	133	**145**	154	131	139	152	162	135	144	157	167
	1750	MBh	54.1	55.3	59.0	63.1	52.8	54.0	57.7	61.6	51.6	52.7	56.3	60.2	50.3	51.4	54.9	58.7	47.8	48.8	52.2	55.8	44.3	45.2	48.3	51.7
		S/T	0.83	0.78	0.64	0.48	0.86	0.81	0.66	0.49	0.89	0.83	0.68	0.51	0.92	0.86	0.70	0.52	0.95	0.89	0.73	0.54	0.96	0.90	0.73	0.55
		ΔT	24	23	20	16	24	23	20	16	24	23	20	16	24	23	20	16	24	23	20	16	22	21	19	15
		kW	3.91	3.99	4.12	4.24	4.21	4.29	4.43	4.57	4.46	4.56	4.71	4.86	4.69	4.80	4.95	5.11	4.89	5.00	5.16	5.33	5.06	5.17	5.34	5.52
		Amps	12.3	12.5	12.8	13.2	13.1	13.3	13.7	14.1	14.0	14.3	14.7	15.1	14.8	15.1	15.5	16.0	15.6	15.9	16.3	16.9	16.4	16.7	17.2	17.7
		HI PR	239	257	271	283	268	288	304	317	305	328	346	361	347	373	394	411	390	420	444	463	431	464	490	511
		LO PR	105	112	122	130	111	118	129	137	115	123	134	143	121	129	141	150	127	135	147	157	131	140	152	162
85	2250	MBh	61.4	62.6	65.6	69.9	60.0	61.1	64.0	68.3	58.5	59.7	62.5	66.7	57.1	58.2	61.0	65.1	54.3	55.3	57.9	61.8	50.3	51.2	53.7	57.2
		S/T	0.95	0.92	0.83	0.67	0.99	0.95	0.86	0.70	1.00	0.98	0.88	0.71	1.00	1.00	0.91	0.74	1.00	1.00	0.94	0.77	1.00	1.00	0.95	0.77
		ΔT	24	23	22	19	24	24	22	19	24	24	22	19	23	24	23	20	22	23	22	19	21	21	21	18
		kW	4.07	4.15	4.28	4.42	4.38	4.47	4.61	4.76	4.65	4.75	4.90	5.06	4.89	5.00	5.16	5.33	5.10	5.21	5.38	5.56	5.27	5.39	5.57	5.75
		Amps	12.7	13.0	13.3	13.7	13.6	13.8	14.2	14.6	14.5	14.8	15.2	15.7	15.4	15.7	16.1	16.6	16.2	16.5	17.0	17.6	17.0	17.4	17.9	18.5
		HI PR	251	270	285	298	282	303	320	334	320	345	364	380	365	393	415	433	411	442	467	487	454	488	515	538
		LO PR	110	117	128	137	117	124	135	144	121	129	141	150	127	135	148	158	133	142	155	165	138	147	160	171
	2000	MBh	59.6	60.8	63.6	67.9	58.2	59.4	62.2	66.3	56.8	57.9	60.7	64.7	55.5	56.5	59.2	63.2	52.7	53.7	56.2	60.0	48.8	49.7	52.1	55.6
		S/T	0.91	0.88	0.79	0.64	0.94	0.91	0.82	0.66	0.96	0.93	0.84	0.68	1.00	0.96	0.87	0.70	1.00	1.00	0.90	0.73	1.00	1.00	0.91	0.74
		ΔT	25	24	23	20	25	25	23	20	25	25	23	20	25	25	24	20	24	25	23	20	22	23	22	19
		kW	4.04	4.12	4.25	4.38	4.34	4.43	4.58	4.72	4.61	4.71	4.86	5.02	4.85	4.96	5.12	5.29	5.05	5.16	5.33	5.51	5.23	5.34	5.52	5.71
		Amps	12.6	12.9	13.2	13.6	13.5	13.7	14.1	14.5	14.4	14.7	15.1	15.6	15.2	15.6	16.0	16.5	16.1	16.4	16.9	17.4	16.9	17.2	17.7	18.3
		HI PR	249	267	282	295	279	300	317	331	317	341	360	376	361	389	411	428	406	437	462	482	449	483	510	532
		LO PR	109	116	127	135	116	123	134	143	120	128	139	148	126	134	146	156	132	141	153	163	137	145	159	169
	1750	MBh	55.0	56.1	58.7	62.7	53.7	54.8	57.4	61.2	52.5	53.5	56.0	59.8	51.2	52.2	54.6	58.3	48.6	49.6	51.9	55.4	45.0	45.9	48.1	51.3
		S/T	0.87	0.84	0.76	0.62	0.91	0.87	0.79	0.64	0.93	0.90	0.81	0.66	0.96	0.93	0.84	0.68	1.00	0.96	0.87	0.70	1.00	0.97	0.87	0.71
		ΔT	25	25	24	20	26	25	24	21	26	25	24	21	26	25	24	21	25	25	24	20	24	23	22	19
		kW	3.94	4.02	4.15	4.28	4.24	4.33	4.46	4.61	4.50	4.60	4.74	4.90	4.73	4.83	4.99	5.16	4.93	5.04	5.20	5.37	5.10	5.21	5.38	5.56
		Amps	12.3	12.6	12.9	13.3	13.2	13.4	13.8	14.2	14.1	14.4	14.8	15.2	14.9	15.2	15.6	16.1	15.7	16.0	16.5	17.0	16.5	16.8	17.3	17.9
		HI PR	241	259	274	286	271	291	307	321	308	331	350	365	350	377	398	415	394	424	448	467	436	469	495	516
		LO PR	106	113	123	131	112	119	130	139	116	124	135	144	122	130	142	151	128	136	149	159	133	141	154	164

IDB = Entering Indoor Dry Bulb Temperature

Shaded area reflects AHRI Ratings conditions

kW = Total system power

High and low pressures are measured at the liquid and suction service ports.

Amps: Unit amps (comp.+ evaporator + condenser fan motors)

Expanded Cooling Data — CPC060 C Models

			Outdoor Ambient Temperature																							
			65°F				75°F				85°F				95°F				105°F				115°F			
			Entering Indoor Wet Bulb Temperature																							
IDB	Airflow		59	63	67	71	59	63	67	71	59	63	67	71	59	63	67	71	59	63	67	71	59	63	67	71
70	2250	MBh	56.8	58.9	64.5	-	55.5	57.5	63.0	-	54.2	56.2	61.5	-	52.9	54.8	60.0	-	50.2	52.1	57.0	-	46.5	48.2	52.8	-
		S/T	0.74	0.62	0.43	-	0.77	0.64	0.44	-	0.79	0.66	0.46	-	0.81	0.68	0.47	-	0.84	0.70	0.49	-	0.85	0.71	0.49	-
		ΔT	17	15	11	-	17	15	11	-	17	15	11	-	18	15	12	-	17	15	11	-	16	14	11	-
		kW	4.10	4.19	4.32	-	4.41	4.50	4.64	-	4.68	4.78	4.93	-	4.92	5.02	5.18	-	5.12	5.23	5.40	-	5.29	5.41	5.58	-
		HI PR	244	262	277	-	273	294	311	-	311	335	353	-	354	381	402	-	398	429	453	-	440	474	500	-
		LO PR	107	114	125	-	113	121	132	-	118	125	137	-	124	132	144	-	130	138	151	-	134	143	156	-
	2000	MBh	55.2	57.2	62.7	-	53.9	55.9	61.2	-	52.6	54.5	59.7	-	51.3	53.2	58.3	-	48.8	50.5	55.4	-	45.2	46.8	51.3	-
		S/T	0.71	0.59	0.41	-	0.73	0.61	0.42	-	0.75	0.63	0.43	-	0.77	0.65	0.45	-	0.80	0.67	0.47	-	0.81	0.68	0.47	-
		ΔT	18	16	12	-	18	16	12	-	18	16	12	-	18	16	12	-	18	16	12	-	17	15	11	-
		kW	4.07	4.16	4.28	-	4.37	4.47	4.60	-	4.64	4.74	4.89	-	4.88	4.98	5.14	-	5.08	5.19	5.35	-	5.25	5.36	5.54	-
		HI PR	241	260	274	-	271	291	308	-	308	331	350	-	351	377	398	-	394	424	448	-	436	469	495	-
		LO PR	106	113	123	-	112	119	130	-	117	124	136	-	123	130	142	-	128	137	149	-	133	141	154	-
	1750	MBh	50.9	52.8	57.8	-	49.7	51.6	56.5	-	48.6	50.3	55.1	-	47.4	49.1	53.8	-	45.0	46.7	51.1	-	41.7	43.2	47.3	-
		S/T	0.68	0.57	0.39	-	0.71	0.59	0.41	-	0.72	0.60	0.42	-	0.75	0.62	0.43	-	0.78	0.65	0.45	-	0.78	0.65	0.45	-
		ΔT	18	16	12	-	18	16	12	-	18	16	12	-	19	16	12	-	18	16	12	-	17	15	11	-
		kW	3.98	4.06	4.18	-	4.27	4.36	4.50	-	4.53	4.63	4.77	-	4.76	4.86	5.01	-	4.95	5.06	5.22	-	5.12	5.23	5.40	-
		HI PR	234	252	266	-	263	283	298	-	299	321	339	-	340	366	386	-	383	412	435	-	423	455	480	-
		LO PR	103	110	120	-	109	116	127	-	113	120	131	-	119	127	138	-	125	133	145	-	129	137	150	-
75	2250	MBh	57.8	59.5	64.4	69.1	56.5	58.1	62.9	67.5	55.1	56.7	61.4	65.9	53.8	55.4	59.9	64.3	51.1	52.6	56.9	61.1	47.3	48.7	52.7	56.6
		S/T	0.84	0.75	0.57	0.37	0.87	0.78	0.59	0.38	0.89	0.80	0.61	0.39	0.92	0.83	0.63	0.40	0.96	0.86	0.65	0.42	0.97	0.86	0.65	0.42
		ΔT	20	18	15	10	20	19	15	10	20	19	15	10	20	19	15	11	20	18	15	10	19	17	14	10
		kW	4.14	4.22	4.35	4.49	4.44	4.54	4.68	4.83	4.72	4.82	4.97	5.13	4.96	5.06	5.22	5.40	5.16	5.27	5.44	5.62	5.34	5.45	5.63	5.82
		HI PR	246	265	280	292	276	297	314	327	314	338	357	372	358	385	407	424	402	433	457	477	445	479	505	527
		LO PR	108	115	126	134	115	122	133	142	119	127	138	147	125	133	145	155	131	139	152	162	136	144	157	168
	2000	MBh	56.1	57.8	62.5	67.1	54.8	56.4	61.1	65.6	53.5	55.1	59.6	64.0	52.2	**53.7**	58.2	62.4	49.6	51.1	55.3	59.3	45.9	47.3	51.2	54.9
		S/T	0.80	0.72	0.54	0.35	0.83	0.74	0.56	0.36	0.85	0.76	0.58	0.37	0.88	**0.79**	0.60	0.38	0.91	0.82	0.62	0.40	0.92	0.82	0.62	0.40
		ΔT	21	19	16	11	21	19	16	11	21	19	16	11	21	**19**	16	11	21	19	16	11	19	18	15	10
		kW	4.11	4.19	4.32	4.45	4.41	4.50	4.64	4.79	4.68	4.78	4.93	5.09	4.92	**5.02**	5.18	5.35	5.12	5.23	5.40	5.58	5.29	5.41	5.58	5.77
		HI PR	244	262	277	289	273	294	311	324	311	335	353	369	354	**381**	402	420	398	429	453	472	440	474	500	522
		LO PR	107	114	125	133	113	121	132	140	118	125	137	146	124	**132**	144	153	130	138	151	161	134	143	156	166
	1750	MBh	51.8	53.3	57.7	62.0	50.6	52.1	56.4	60.5	49.4	50.8	55.0	59.1	48.2	49.6	53.7	57.6	45.8	47.1	51.0	54.7	42.4	43.7	47.3	50.7
		S/T	0.77	0.69	0.52	0.34	0.80	0.72	0.54	0.35	0.82	0.74	0.56	0.36	0.85	0.76	0.57	0.37	0.88	0.79	0.60	0.38	0.89	0.79	0.60	0.39
		ΔT	21	19	16	11	21	20	16	11	21	20	16	11	21	20	16	11	21	20	16	11	20	18	15	10
		kW	4.01	4.09	4.22	4.35	4.31	4.40	4.53	4.67	4.57	4.66	4.81	4.96	4.80	4.90	5.06	5.22	4.99	5.10	5.26	5.44	5.16	5.27	5.44	5.62
		HI PR	236	254	269	280	265	285	301	314	302	325	343	358	344	370	390	407	387	416	439	458	427	460	485	506
		LO PR	104	111	121	129	110	117	128	136	114	122	133	141	120	128	140	149	126	134	146	156	130	139	151	161

IDB = Entering Indoor Dry Bulb Temperature
High and low pressures are measured at the liquid and suction service ports.

Shaded area reflects ACCA (TVA) conditions

kW = Total system power
Amps: Unit amps (comp.+ evaporator + condenser fan motors)

Expanded Cooling Data — CPC060 C Models (cont.)

			Outdoor Ambient Temperature																							
			65°F				75°F				85°F				95°F				105°F				115°F			
			Entering Indoor Wet Bulb Temperature																							
IDB	Airflow		59	63	67	71	59	63	67	71	59	63	67	71	59	63	67	71	59	63	67	71	59	63	67	71
80	2250	MBh	58.8	60.1	64.2	68.7	57.5	58.7	62.7	67.1	56.1	57.3	61.2	65.5	54.7	55.9	59.7	63.9	52.0	53.1	56.8	60.7	48.2	49.2	52.6	56.2
		S/T	0.92	0.87	0.70	0.5	0.96	0.90	0.73	0.5	1.00	0.92	0.75	0.6	1.00	0.95	0.77	0.6	1.00	1.00	0.80	0.6	1.00	1.00	0.81	0.6
		ΔT	22	21	18	15	22	22	19	15	23	22	19	15	22	22	19	15	21	22	19	15	20	20	17	13.9
		kW	4.17	4.25	4.38	4.5	4.48	4.57	4.72	4.9	4.75	4.86	5.01	5.2	5.00	5.10	5.27	5.4	5.20	5.32	5.49	5.7	5.38	5.50	5.68	5.9
		HI PR	249	268	283	294.7	279	300	317	330.6	317	341	361	376.0	361	389	411	428.3	407	437	462	481.8	449	483	510	532.3
		LO PR	110	117	127	135.5	116	123	134	143.2	120	128	140	148.8	126	134	147	156.3	132	141	154	163.8	137	146	159	169.4
	2000	MBh	57.1	58.4	62.4	66.7	55.8	57.0	60.9	65.1	54.5	55.6	59.5	63.6	53.1	54.3	**58.0**	62.0	50.5	51.6	55.1	58.9	46.8	47.8	51.0	54.6
		S/T	0.88	0.83	0.67	0.5	0.91	0.86	0.70	0.5	0.94	0.88	0.71	0.5	0.97	0.91	**0.74**	0.6	1.00	0.94	0.77	0.6	1.00	0.95	0.77	0.6
		ΔT	23	22	19	15	23	22	20	16	23	22	20	16	24	23	**20**	16	23	22	19	15	21	21	18	14.5
		kW	4.14	4.22	4.35	4.5	4.44	4.54	4.68	4.8	4.72	4.82	4.97	5.1	4.96	5.06	**5.23**	5.4	5.16	5.27	5.44	5.6	5.34	5.45	5.63	5.8
		HI PR	246	265	280	291.7	276	297	314	327.4	314	338	357	372.3	358	385	**407**	424.0	402	433	457	477.0	445	479	505	527.1
		LO PR	108	115	126	134.2	115	122	133	141.7	119	127	138	147.3	125	133	**145**	154.7	131	139	152	162.2	136	144	158	167.7
	1750	MBh	52.7	53.9	57.5	61.5	51.5	52.6	56.2	60.1	50.3	51.4	54.9	58.7	49.0	50.1	53.5	57.2	46.6	47.6	50.9	54.4	43.2	44.1	47.1	50.4
		S/T	0.85	0.80	0.65	0.5	0.88	0.83	0.67	0.5	0.90	0.85	0.69	0.5	0.93	0.87	0.71	0.5	0.97	0.91	0.74	0.6	0.97	0.91	0.74	0.6
		ΔT	24	23	20	16	24	23	20	16	24	23	20	16	24	23	20	16	24	23	20	16	22	21	18	14.7
		kW	4.04	4.12	4.25	4.4	4.34	4.43	4.57	4.7	4.60	4.70	4.85	5.0	4.84	4.94	5.10	5.3	5.03	5.14	5.31	5.5	5.20	5.32	5.49	5.7
		HI PR	239	257	271	283.0	268	288	304	317.5	305	328	346	361.1	347	373	394	411.3	390	420	444	462.7	431	464	490	511.3
		LO PR	105	112	122	130.1	111	118	129	137.5	116	123	134	142.9	121	129	141	150.1	127	135	148	157.3	132	140	153	162.7
85	2250	MBh	59.9	61.0	63.9	68.2	58.5	59.6	62.4	66.6	57.1	58.2	60.9	65.0	55.7	56.8	59.4	63.4	52.9	53.9	56.5	60.2	49.0	49.9	52.3	55.8
		S/T	0.97	0.93	0.84	0.7	1.00	0.97	0.87	0.7	1.00	0.99	0.90	0.7	1.00	1.00	0.92	0.8	1.00	1.00	0.96	0.8	1.00	1.00	0.97	0.8
		ΔT	24	23	22	19	24	24	22	19	23	24	22	19	23	23	22	19	22	22	22	19	20	20	21	17.9
		kW	4.20	4.29	4.42	4.6	4.51	4.61	4.75	4.9	4.79	4.89	5.05	5.2	5.04	5.15	5.31	5.5	5.24	5.36	5.53	5.7	5.42	5.54	5.72	5.9
		HI PR	251	270	285	297.6	282	303	320	333.9	320	345	364	379.8	365	393	415	432.6	411	442	467	486.6	454	488	515	537.7
		LO PR	111	118	129	136.9	117	124	136	144.6	121	129	141	150.3	128	136	148	157.9	134	142	155	165.4	138	147	161	171.1
	2000	MBh	58.1	59.2	62.0	66.2	56.8	57.9	60.6	64.6	55.4	56.5	59.2	63.1	54.1	55.1	57.7	61.6	51.4	52.3	54.8	58.5	47.6	48.5	50.8	54.2
		S/T	0.92	0.89	0.80	0.7	0.96	0.92	0.83	0.7	0.98	0.95	0.85	0.7	1.00	0.98	0.88	0.7	1.00	1.00	0.92	0.7	1.00	1.00	0.92	0.7
		ΔT	25	24	23	20	25	25	23	20	25	25	23	20	25	25	23	20	24	24	23	20	22	22	22	18.6
		kW	4.17	4.25	4.38	4.5	4.48	4.57	4.72	4.9	4.75	4.86	5.01	5.2	5.00	5.10	5.27	5.4	5.20	5.32	5.49	5.7	5.38	5.50	5.68	5.9
		HI PR	249	268	283	294.7	279	300	317	330.6	317	341	361	376.0	361	389	411	428.3	407	437	462	481.8	449	483	510	532.3
		LO PR	110	117	127	135.5	116	123	134	143.2	120	128	140	148.8	126	134	147	156.3	132	141	154	163.8	137	146	159	169.4
	1750	MBh	53.6	54.7	57.3	61.1	52.4	53.4	55.9	59.7	51.1	52.1	54.6	58.2	49.9	50.9	53.3	56.8	47.4	48.3	50.6	54.0	43.9	44.8	46.9	50.0
		S/T	0.89	0.86	0.78	0.6	0.92	0.89	0.80	0.7	0.95	0.91	0.82	0.7	0.98	0.94	0.85	0.7	1.00	0.98	0.88	0.7	1.00	0.99	0.89	0.7
		ΔT	25	25	23	20	25	25	24	20	25	25	24	20	26	25	24	21	25	25	23	20	23	23	22	19.0
		kW	4.07	4.16	4.28	4.4	4.37	4.47	4.60	4.7	4.64	4.74	4.89	5.0	4.88	4.98	5.14	5.3	5.07	5.18	5.35	5.5	5.25	5.36	5.54	5.7
		HI PR	241	260	274	285.8	271	291	307	320.7	308	331	350	364.7	351	377	398	415.4	394	424	448	467.4	436	469	495	516.4
		LO PR	106	113	123	131.4	112	119	130	138.9	117	124	136	144.3	123	130	142	151.6	128	137	149	158.9	133	141	154	164.3

IDB = Entering Indoor Dry Bulb Temperature

High and low pressures are measured at the liquid and suction service ports.

Shaded area reflects AHRI Ratings conditions

kW = Total system power

Amps: Unit amps (comp.+ evaporator + condenser fan motors)

Expanded Cooling Data — CPC072 B Models

			Outdoor Ambient Temperature																							
			65°F				75°F				85°F				95°F				105°F				115°F			
			Entering Indoor Wet Bulb Temperature																							
IDB	Airflow		59	63	67	71	59	63	67	71	59	63	67	71	59	63	67	71	59	63	67	71	59	63	67	71
70	2400	MBh	68.6	71.1	77.9	-	67.0	69.4	76.0	-	65.4	67.8	74.2	-	63.8	66.1	72.4	-	60.6	62.8	68.8	-	56.1	58.2	63.7	-
		S/T	0.68	0.57	0.40	-	0.71	0.59	0.41	-	0.73	0.61	0.42	-	0.75	0.63	0.43	-	0.78	0.65	0.45	-	0.78	0.65	0.45	-
		ΔT	18	16	12	-	18	16	12	-	18	16	12	-	18	16	12	-	18	16	12	-	17	15	11	-
		kW	5.08	5.18	5.33	-	5.44	5.54	5.71	-	5.75	5.86	6.04	-	6.02	6.15	6.33	-	6.26	6.39	6.58	-	6.46	6.59	6.80	-
		HI PR	237	255	270	-	266	286	302	-	303	326	344	-	345	371	392	-	388	417	441	-	429	461	487	-
		LO PR	107	114	124	-	113	120	131	-	117	125	136	-	123	131	143	-	129	137	150	-	134	142	155	-
	2150	MBh	67.5	70.0	76.7	-	66.0	68.4	74.9	-	64.4	66.8	73.1	-	62.8	65.1	71.4	-	59.7	61.9	67.8	-	55.3	57.3	62.8	-
		S/T	0.65	0.55	0.38	-	0.68	0.57	0.39	-	0.69	0.58	0.40	-	0.72	0.60	0.42	-	0.74	0.62	0.43	-	0.75	0.63	0.43	-
		ΔT	19	16	12	-	19	17	13	-	19	17	13	-	19	17	13	-	19	16	12	-	18	15	12	-
		kW	5.06	5.16	5.30	-	5.41	5.52	5.68	-	5.72	5.83	6.01	-	5.99	6.11	6.30	-	6.22	6.35	6.54	-	6.42	6.56	6.76	-
		HI PR	236	253	268	-	264	284	300	-	301	323	342	-	342	368	389	-	385	414	438	-	426	458	484	-
		LO PR	106	113	123	-	112	119	130	-	116	124	135	-	122	130	142	-	128	136	149	-	133	141	154	-
	1875	MBh	62.3	64.6	70.8	-	60.9	63.1	69.2	-	59.4	61.6	67.5	-	58.0	60.1	65.9	-	55.1	57.1	62.6	-	51.0	52.9	58.0	-
		S/T	0.63	0.53	0.36	-	0.65	0.55	0.38	-	0.67	0.56	0.39	-	0.69	0.58	0.40	-	0.72	0.60	0.42	-	0.72	0.60	0.42	-
		ΔT	19	17	13	-	20	17	13	-	20	17	13	-	20	17	13	-	19	17	13	-	18	16	12	-
		kW	4.95	5.04	5.19	-	5.29	5.39	5.55	-	5.59	5.70	5.87	-	5.85	5.97	6.15	-	6.08	6.20	6.39	-	6.27	6.40	6.60	-
		HI PR	228	246	260	-	256	276	291	-	292	314	331	-	332	357	377	-	374	402	425	-	413	444	469	-
		LO PR	103	109	120	-	109	116	126	-	113	120	131	-	119	126	138	-	124	132	144	-	129	137	149	-
75	2400	MBh	69.7	71.8	77.7	83.4	68.1	70.1	75.9	81.5	66.5	68.4	74.1	79.5	64.9	**66.8**	72.3	77.6	61.6	63.4	68.7	73.7	57.1	58.8	63.6	68.3
		S/T	0.78	0.69	0.53	0.34	0.80	0.72	0.54	0.35	0.82	0.74	0.56	0.36	0.85	**0.76**	0.58	0.37	0.88	0.79	0.60	0.38	0.89	0.80	0.60	0.39
		ΔT	21	19	16	11	21	19	16	11	21	19	16	11	21	**19**	16	11	21	19	16	11	19	18	15	10
		kW	5.12	5.22	5.37	5.53	5.48	5.59	5.75	5.92	5.79	5.91	6.08	6.27	6.07	**6.19**	6.38	6.58	6.31	6.44	6.63	6.84	6.51	6.64	6.85	7.07
		HI PR	240	258	272	284	269	289	306	319	306	329	347	362	348	**375**	396	413	392	422	445	464	433	466	492	513
		LO PR	108	115	125	133	114	121	132	141	118	126	138	147	124	**132**	145	154	130	139	151	161	135	144	157	167
	2150	MBh	68.7	70.7	76.6	82.2	67.1	69.1	74.8	80.3	65.5	67.4	73.0	78.3	63.9	**65.8**	71.2	76.4	60.7	62.5	67.7	72.6	56.2	57.9	62.7	67.3
		S/T	0.74	0.66	0.50	0.32	0.77	0.69	0.52	0.34	0.79	0.71	0.53	0.34	0.82	**0.73**	0.55	0.36	0.85	0.76	0.57	0.37	0.85	0.76	0.58	0.37
		ΔT	22	20	16	11	22	20	17	12	22	20	17	12	22	**21**	17	12	22	20	17	11	21	19	15	11
		kW	5.10	5.19	5.34	5.50	5.45	5.56	5.72	5.89	5.76	5.88	6.05	6.24	6.04	**6.16**	6.35	6.54	6.27	6.40	6.60	6.80	6.47	6.61	6.81	7.03
		HI PR	238	256	270	282	267	287	303	316	304	327	345	360	346	**372**	393	410	389	419	442	461	430	463	489	510
		LO PR	107	114	124	133	113	120	131	140	118	125	137	146	124	**131**	144	153	130	138	150	160	134	143	156	166
	1875	MBh	63.4	65.3	70.7	75.8	61.9	63.8	69.0	74.1	60.5	62.2	67.4	72.3	59.0	**60.7**	65.7	70.5	56.0	57.7	62.4	67.0	51.9	53.4	57.8	62.1
		S/T	0.72	0.64	0.49	0.31	0.74	0.66	0.50	0.32	0.76	0.68	0.52	0.33	0.79	**0.70**	0.53	0.34	0.82	0.73	0.55	0.36	0.82	0.74	0.56	0.36
		ΔT	22	21	17	12	23	21	17	12	23	21	17	12	23	**21**	17	12	22	21	17	12	21	19	16	11
		kW	4.99	5.08	5.22	5.38	5.33	5.43	5.59	5.76	5.63	5.74	5.91	6.09	5.90	**6.02**	6.20	6.39	6.13	6.25	6.44	6.64	6.32	6.45	6.65	6.86
		HI PR	231	248	262	274	259	279	294	307	295	317	335	349	335	**361**	381	398	377	406	429	447	417	449	474	494
		LO PR	104	111	121	129	110	117	128	136	114	121	133	141	120	**128**	139	148	126	134	146	155	130	138	151	161

IDB = Entering Indoor Dry Bulb Temperature

Shaded area reflects ACCA (TVA) conditions

kW = Total system power

High and low pressures are measured at the liquid and suction service ports.

Amps: Unit amps (comp.+ evaporator + condenser fan motors)

Expanded Cooling Data — CPC072 B Models (cont.)

			Outdoor Ambient Temperature																							
			65°F				75°F				85°F				95°F				105°F				115°F			
			Entering Indoor Wet Bulb Temperature																							
IDB	Airflow		59	63	67	71	59	63	67	71	59	63	67	71	59	63	67	71	59	63	67	71	59	63	67	71
80	2400	MBh	71.0	72.5	77.5	82.8	69.3	70.8	75.7	80.9	67.7	69.1	73.9	79.0	66.0	67.5	72.1	77.0	62.7	64.1	68.5	73.2	58.1	59.4	63.4	67.8
		S/T	0.85	0.80	0.65	0.49	0.88	0.83	0.67	0.50	0.90	0.85	0.69	0.52	0.93	0.88	0.71	0.53	0.97	0.91	0.74	0.55	0.98	0.92	0.75	0.56
		ΔT	23	22	19	15	23	22	20	16	23	22	20	16	24	23	20	16	23	22	19	16	22	21	18	14
		kW	5.16	5.26	5.41	5.57	5.52	5.63	5.79	5.97	5.84	5.95	6.13	6.32	6.12	6.24	6.43	6.63	6.36	6.49	6.69	6.90	6.56	6.70	6.90	7.12
		HI PR	242	260	275	287	272	292	309	322	309	332	351	366	352	379	400	417	396	426	450	469	437	471	497	518
		LO PR	109	116	127	135	115	123	134	142	120	127	139	148	126	134	146	156	132	140	153	163	136	145	158	169
	2150	MBh	69.9	71.4	76.3	81.6	68.3	69.8	74.6	79.7	66.7	68.1	72.8	77.8	65.0	66.5	**71.0**	75.9	61.8	63.1	67.5	72.1	57.2	58.5	62.5	66.8
		S/T	0.82	0.76	0.62	0.47	0.84	0.79	0.64	0.48	0.87	0.81	0.66	0.49	0.89	0.84	**0.68**	0.51	0.93	0.87	0.71	0.53	0.94	0.88	0.71	0.53
		ΔT	24	23	20	16	25	24	21	16	25	24	21	16	25	24	**21**	17	25	24	20	16	23	22	19	15
		kW	5.13	5.23	5.38	5.54	5.49	5.60	5.76	5.94	5.81	5.92	6.10	6.29	6.08	6.21	**6.40**	6.59	6.32	6.45	6.65	6.86	6.53	6.66	6.87	7.08
		HI PR	240	259	273	285	270	290	306	320	307	330	349	364	349	376	**397**	414	393	423	447	466	434	467	493	515
		LO PR	108	115	126	134	114	122	133	141	119	126	138	147	125	133	**145**	154	131	139	152	162	135	144	157	167
	1875	MBh	64.5	65.9	70.4	75.3	63.0	64.4	68.8	73.6	61.5	62.9	67.2	71.8	60.0	61.3	65.5	70.1	57.0	58.3	62.3	66.6	52.8	54.0	57.7	61.6
		S/T	0.79	0.74	0.60	0.45	0.81	0.76	0.62	0.46	0.84	0.78	0.64	0.48	0.86	0.81	0.66	0.49	0.90	0.84	0.68	0.51	0.90	0.85	0.69	0.51
		ΔT	25	24	21	17	25	24	21	17	25	24	21	17	25	24	21	17	25	24	21	17	23	22	19	16
		kW	5.02	5.12	5.26	5.42	5.37	5.47	5.63	5.80	5.67	5.79	5.96	6.14	5.95	6.07	6.25	6.44	6.17	6.30	6.49	6.69	6.37	6.50	6.70	6.91
		HI PR	233	251	265	276	262	282	297	310	298	320	338	353	339	365	385	402	381	410	433	452	421	453	479	499
		LO PR	105	112	122	130	111	118	129	137	115	123	134	143	121	129	141	150	127	135	147	157	131	140	152	162
85	2400	MBh	72.2	73.6	77.1	82.2	70.5	71.9	75.3	80.3	68.8	70.2	73.5	78.4	67.2	68.5	71.7	76.5	63.8	65.0	68.1	72.7	59.1	60.2	63.1	67.3
		S/T	0.89	0.86	0.78	0.63	0.93	0.89	0.81	0.65	0.95	0.92	0.83	0.67	0.98	0.94	0.85	0.69	1.00	0.98	0.88	0.72	1.00	0.99	0.89	0.72
		ΔT	25	24	23	20	25	25	23	20	25	25	23	20	25	25	23	20	24	24	23	20	23	23	22	19
		kW	5.20	5.30	5.45	5.61	5.56	5.67	5.84	6.01	5.88	6.00	6.18	6.37	6.16	6.29	6.48	6.68	6.40	6.54	6.74	6.95	6.61	6.75	6.96	7.18
		HI PR	244	263	278	290	274	295	312	325	312	336	355	370	355	382	404	421	400	430	454	474	442	475	502	523
		LO PR	110	117	128	136	116	124	135	144	121	129	140	150	127	135	147	157	133	142	155	165	138	146	160	170
	2150	MBh	71.1	72.5	75.9	81.0	69.5	70.8	74.2	79.1	67.8	69.1	72.4	77.3	66.2	67.5	70.6	75.4	62.9	64.1	67.1	71.6	58.2	59.4	62.2	66.3
		S/T	0.85	0.82	0.74	0.60	0.89	0.85	0.77	0.63	0.91	0.88	0.79	0.64	0.94	0.90	0.82	0.66	0.97	0.94	0.85	0.69	0.98	0.95	0.85	0.69
		ΔT	26	26	24	21	26	26	24	21	26	26	24	21	27	26	25	21	26	26	24	21	24	24	23	20
		kW	5.17	5.27	5.42	5.58	5.53	5.64	5.81	5.98	5.85	5.97	6.15	6.33	6.13	6.26	6.45	6.65	6.37	6.50	6.70	6.91	6.58	6.71	6.92	7.14
		HI PR	243	261	276	288	272	293	310	323	310	333	352	367	353	380	401	418	397	427	451	470	439	472	498	520
		LO PR	109	116	127	135	116	123	134	143	120	128	139	148	126	134	146	156	132	141	153	163	137	145	159	169
	1875	MBh	65.7	66.9	70.1	74.8	64.1	65.4	68.5	73.0	62.6	63.8	66.8	71.3	61.1	62.3	65.2	69.6	58.0	59.1	61.9	66.1	53.7	54.8	57.4	61.2
		S/T	0.82	0.80	0.72	0.58	0.85	0.82	0.74	0.60	0.88	0.85	0.76	0.62	0.90	0.87	0.79	0.64	0.94	0.91	0.82	0.66	0.95	0.91	0.82	0.67
		ΔT	27	26	25	21	27	26	25	22	27	26	25	22	27	27	25	22	27	26	25	21	25	25	23	20
		kW	5.06	5.15	5.30	5.46	5.41	5.51	5.67	5.84	5.72	5.83	6.00	6.19	5.99	6.11	6.30	6.49	6.22	6.35	6.54	6.75	6.42	6.55	6.76	6.97
		HI PR	235	253	268	279	264	284	300	313	301	323	341	356	342	368	389	406	385	414	438	456	425	458	483	504
		LO PR	106	113	123	131	112	119	130	139	116	124	135	144	122	130	142	151	128	136	149	159	133	141	154	164

IDB = Entering Indoor Dry Bulb Temperature

High and low pressures are measured at the liquid and suction service ports.

Shaded area reflects AHRI Ratings conditions

kW = Total system power

Amps: Unit amps (comp.+ evaporator + condenser fan motors)

Expanded Cooling Data — CPC072 C Models

			Outdoor Ambient Temperature																							
			65°F				75°F				85°F				95°F				105°F				115°F			
			Entering Indoor Wet Bulb Temperature																							
IDB	Airflow		59	63	67	71	59	63	67	71	59	63	67	71	59	63	67	71	59	63	67	71	59	63	67	71
70	2650	MBh	69.6	72.1	79.0	-	68.0	70.4	77.2	-	66.3	68.8	75.3	-	64.7	67.1	73.5	-	61.5	63.7	69.8	-	57.0	59.0	64.7	-
		S/T	0.71	0.60	0.41	-	0.74	0.62	0.43	-	0.76	0.63	0.44	-	0.78	0.65	0.45	-	0.81	0.68	0.47	-	0.82	0.68	0.47	-
		ΔT	17	15	11	-	17	15	11	-	17	15	11	-	18	15	12	-	17	15	11	-	16	14	11	-
		kW	5.00	5.10	5.25	-	5.36	5.47	5.64	-	5.68	5.80	5.98	-	5.97	6.10	6.29	-	6.21	6.34	6.54	-	6.42	6.56	6.77	-
		HI PR	231	248	262	-	259	279	294	-	295	317	335	-	336	361	381	-	377	406	429	-	417	449	474	-
		LO PR	107	114	124	-	113	120	131	-	117	125	136	-	123	131	143	-	129	138	150	-	134	142	155	-
	2350	MBh	67.5	70.0	76.7	-	66.0	68.4	74.9	-	64.4	66.8	73.1	-	62.8	65.1	71.4	-	59.7	61.9	67.8	-	55.3	57.3	62.8	-
		S/T	0.68	0.57	0.39	-	0.70	0.59	0.41	-	0.72	0.60	0.42	-	0.75	0.62	0.43	-	0.77	0.65	0.45	-	0.78	0.65	0.45	-
		ΔT	18	16	12	-	18	16	12	-	18	16	12	-	18	16	12	-	18	16	12	-	17	15	11	-
		kW	4.96	5.06	5.21	-	5.32	5.43	5.60	-	5.64	5.76	5.94	-	5.92	6.05	6.24	-	6.16	6.29	6.49	-	6.37	6.50	6.71	-
		HI PR	229	246	260	-	256	276	291	-	292	314	331	-	332	357	377	-	374	402	425	-	413	444	469	-
		LO PR	106	113	123	-	112	119	130	-	116	124	135	-	122	130	142	-	128	136	149	-	132	141	154	-
	2050	MBh	62.3	64.6	70.8	-	60.9	63.1	69.2	-	59.4	61.6	67.5	-	58.0	60.1	65.9	-	55.1	57.1	62.6	-	51.0	52.9	58.0	-
		S/T	0.66	0.55	0.38	-	0.68	0.57	0.39	-	0.70	0.58	0.40	-	0.72	0.60	0.42	-	0.75	0.62	0.43	-	0.75	0.63	0.44	-
		ΔT	18	16	12	-	19	16	12	-	19	16	12	-	19	16	12	-	18	16	12	-	17	15	11	-
		kW	4.85	4.95	5.09	-	5.20	5.31	5.47	-	5.51	5.62	5.80	-	5.78	5.90	6.09	-	6.01	6.14	6.33	-	6.21	6.35	6.55	-
		HI PR	222	239	252	-	249	268	283	-	283	304	321	-	322	347	366	-	363	390	412	-	401	431	455	-
		LO PR	103	109	119	-	109	115	126	-	113	120	131	-	119	126	138	-	124	132	144	-	128	137	149	-
75	2650	MBh	70.8	72.8	78.9	84.6	69.1	71.2	77.0	82.7	67.5	69.5	75.2	80.7	65.8	67.8	73.3	78.7	62.5	64.4	69.7	74.8	57.9	59.6	64.5	69.3
		S/T	0.81	0.73	0.55	0.35	0.84	0.75	0.57	0.37	0.86	0.77	0.58	0.38	0.89	0.80	0.60	0.39	0.92	0.83	0.62	0.40	0.93	0.83	0.63	0.41
		ΔT	20	18	15	10	20	19	15	10	20	19	15	11	20	19	15	11	20	18	15	10	19	17	14	10
		kW	5.04	5.14	5.29	5.45	5.41	5.52	5.69	5.86	5.73	5.85	6.03	6.22	6.02	6.14	6.34	6.54	6.26	6.39	6.60	6.81	6.47	6.61	6.82	7.05
		HI PR	233	251	265	276	262	282	297	310	298	320	338	353	339	365	385	402	381	410	433	452	421	453	479	499
		LO PR	108	115	126	134	114	121	133	141	119	126	138	147	125	133	145	154	131	139	152	162	135	144	157	167
	2350	MBh	68.7	70.7	76.6	82.2	67.1	69.1	74.8	80.3	65.5	67.4	73.0	78.3	63.9	**65.8**	71.2	76.4	60.7	62.5	67.7	72.6	56.2	57.9	62.7	67.3
		S/T	0.77	0.69	0.52	0.34	0.80	0.72	0.54	0.35	0.82	0.73	0.56	0.36	0.85	**0.76**	0.57	0.37	0.88	0.79	0.60	0.38	0.89	0.79	0.60	0.39
		ΔT	21	19	16	11	21	19	16	11	21	19	16	11	21	**20**	16	11	21	19	16	11	20	18	15	10
		kW	5.00	5.10	5.25	5.41	5.36	5.47	5.64	5.82	5.69	5.80	5.98	6.17	5.97	**6.10**	6.29	6.49	6.21	6.34	6.55	6.76	6.42	6.56	6.77	6.99
		HI PR	231	248	262	274	259	279	294	307	295	317	335	349	336	**361**	381	398	378	406	429	447	417	449	474	494
		LO PR	107	114	124	132	113	120	131	140	118	125	136	145	123	**131**	143	153	129	138	150	160	134	142	155	165
	2050	MBh	63.4	65.3	70.7	75.8	61.9	63.8	69.0	74.1	60.5	62.2	67.4	72.3	59.0	60.7	65.7	70.5	56.0	57.7	62.4	67.0	51.9	53.4	57.8	62.1
		S/T	0.75	0.67	0.50	0.32	0.77	0.69	0.52	0.34	0.79	0.71	0.54	0.35	0.82	0.73	0.55	0.36	0.85	0.76	0.57	0.37	0.86	0.77	0.58	0.37
		ΔT	21	20	16	11	21	20	16	11	21	20	16	11	22	20	16	11	21	20	16	11	20	18	15	10
		kW	4.89	4.98	5.13	5.29	5.24	5.35	5.51	5.68	5.55	5.67	5.84	6.03	5.83	5.95	6.14	6.33	6.06	6.19	6.39	6.59	6.26	6.40	6.60	6.82
		HI PR	224	241	254	265	251	270	286	298	286	308	325	339	326	350	370	386	366	394	416	434	405	435	460	480
		LO PR	104	110	121	128	110	117	127	136	114	121	132	141	120	127	139	148	125	133	146	155	130	138	151	161

IDB = Entering Indoor Dry Bulb Temperature

High and low pressures are measured at the liquid and suction service ports.

Shaded area reflects ACCA (TVA) conditions

kW = Total system power

Amps: Unit amps (comp.+ evaporator + condenser fan motors)

Expanded Cooling Data — CPC072 C Models (cont.)

			Outdoor Ambient Temperature																							
			65°F				75°F				85°F				95°F				105°F				115°F			
			Entering Indoor Wet Bulb Temperature																							
IDB	Airflow		59	63	67	71	59	63	67	71	59	63	67	71	59	63	67	71	59	63	67	71	59	63	67	71
80	2650	MBh	72.0	73.6	78.6	84.0	70.3	71.9	76.8	82.1	68.7	70.2	75.0	80.1	67.0	68.4	73.1	78.2	63.6	65.0	69.5	74.3	58.9	60.2	64.4	68.8
		S/T	0.89	0.83	0.68	0.5	0.92	0.86	0.70	0.5	0.94	0.89	0.72	0.5	1.00	0.91	0.74	0.6	1.00	0.95	0.77	0.6	1.00	0.96	0.78	0.6
		ΔT	22	21	19	15	22	22	19	15	23	22	19	15	23	22	19	15	22	21	19	15	20	20	17	13.9
		kW	5.08	5.18	5.33	5.5	5.45	5.56	5.73	5.9	5.78	5.90	6.08	6.3	6.07	6.19	6.39	6.6	6.31	6.45	6.65	6.9	6.52	6.67	6.88	7.1
		HI PR	236	253	268	279.2	264	284	300	313.3	301	323	342	356.3	342	368	389	405.8	385	414	438	456.5	426	458	484	504.4
		LO PR	109	116	127	135.0	115	123	134	142.7	120	128	139	148.3	126	134	146	155.8	132	140	153	163.2	136	145	159	168.8
	2350	MBh	69.9	71.4	76.3	81.6	68.3	69.8	74.6	79.7	66.7	68.1	72.8	77.8	65.0	66.5	**71.0**	75.9	61.8	63.1	67.5	72.1	57.2	58.5	62.5	66.8
		S/T	0.85	0.80	0.65	0.5	0.88	0.82	0.67	0.5	0.90	0.85	0.69	0.5	0.93	0.87	**0.71**	0.5	0.97	0.91	0.74	0.6	0.97	0.91	0.74	0.6
		ΔT	23	22	19	15	23	22	20	16	23	23	20	16	24	23	**20**	16	23	22	19	16	22	21	18	14.5
		kW	5.04	5.14	5.29	5.5	5.41	5.52	5.69	5.9	5.73	5.85	6.03	6.2	6.02	6.15	**6.34**	6.5	6.26	6.40	6.60	6.8	6.47	6.61	6.82	7.0
		HI PR	233	251	265	276.4	262	282	297	310.2	298	320	338	352.7	339	365	**385**	401.8	381	410	433	452.0	421	453	479	499.4
		LO PR	108	115	126	133.7	114	121	133	141.3	119	126	138	146.8	125	133	**145**	154.2	131	139	152	161.6	135	144	157	167.2
	2050	MBh	64.5	65.9	70.4	75.3	63.0	64.4	68.8	73.6	61.5	62.9	67.2	71.8	60.0	61.3	65.5	70.1	57.0	58.3	62.3	66.6	52.8	54.0	57.7	61.6
		S/T	0.82	0.77	0.62	0.5	0.85	0.79	0.65	0.5	0.87	0.81	0.66	0.5	0.90	0.84	0.68	0.5	0.93	0.87	0.71	0.5	0.94	0.88	0.72	0.5
		ΔT	24	23	20	16	24	23	20	16	24	23	20	16	24	23	20	16	24	23	20	16	22	21	19	14.8
		kW	4.92	5.02	5.17	5.3	5.28	5.39	5.55	5.7	5.60	5.71	5.89	6.1	5.87	6.00	6.19	6.4	6.11	6.24	6.44	6.6	6.31	6.45	6.66	6.9
		HI PR	226	243	257	268.1	254	273	288	300.9	289	311	328	342.2	329	354	374	389.7	370	398	420	438.4	409	440	464	484.4
		LO PR	105	112	122	129.7	111	118	129	137.0	115	122	134	142.4	121	129	140	149.6	127	135	147	156.8	131	139	152	162.2
85	2650	MBh	73.3	74.7	78.2	83.5	71.6	73.0	76.4	81.5	69.9	71.2	74.6	79.6	68.2	69.5	72.8	77.6	64.7	66.0	69.1	73.7	60.0	61.1	64.0	68.3
		S/T	0.93	0.90	0.81	0.7	0.97	0.93	0.84	0.7	0.99	0.96	0.86	0.7	1.00	0.99	0.89	0.7	1.00	1.00	0.92	0.7	1.00	1.00	0.93	0.8
		ΔT	24	23	22	19	24	24	22	19	24	24	22	19	24	24	22	19	22	23	22	19	21	21	21	17.9
		kW	5.11	5.22	5.37	5.5	5.49	5.60	5.78	6.0	5.82	5.94	6.13	6.3	6.11	6.24	6.44	6.6	6.36	6.50	6.71	6.9	6.58	6.72	6.94	7.2
		HI PR	238	256	270	282.0	267	287	303	316.4	304	327	345	359.8	346	372	393	409.8	389	419	442	461.1	430	463	488	509.4
		LO PR	110	117	128	136.4	116	124	135	144.1	121	129	141	149.8	127	135	148	157.3	133	142	155	164.9	138	147	160	170.5
	2350	MBh	71.1	72.5	75.9	81.0	69.5	70.8	74.2	79.1	67.8	69.1	72.4	77.3	66.2	67.5	70.6	75.4	62.9	64.1	67.1	71.6	58.2	59.4	62.2	66.3
		S/T	0.89	0.86	0.77	0.6	0.92	0.89	0.80	0.7	0.94	0.91	0.82	0.7	0.98	0.94	0.85	0.7	1.00	0.98	0.88	0.7	1.00	0.98	0.89	0.7
		ΔT	25	24	23	20	25	25	23	20	25	25	23	20	25	25	23	20	25	24	23	20	23	23	22	18.7
		kW	5.08	5.18	5.33	5.5	5.45	5.56	5.73	5.9	5.78	5.90	6.08	6.3	6.07	6.19	6.39	6.6	6.31	6.45	6.65	6.9	6.52	6.67	6.88	7.1
		HI PR	236	253	268	279.2	264	284	300	313.3	301	323	342	356.3	342	368	389	405.8	385	414	438	456.5	426	458	484	504.4
		LO PR	109	116	127	135.0	115	123	134	142.7	120	128	139	148.3	126	134	146	155.8	132	140	153	163.2	136	145	159	168.8
	2050	MBh	65.7	66.9	70.1	74.8	64.1	65.4	68.5	73.0	62.6	63.8	66.8	71.3	61.1	62.3	65.2	69.6	58.0	59.1	61.9	66.1	53.7	54.8	57.4	61.2
		S/T	0.86	0.83	0.75	0.6	0.89	0.86	0.77	0.6	0.91	0.88	0.79	0.6	0.94	0.91	0.82	0.7	0.98	0.94	0.85	0.7	0.98	0.95	0.86	0.7
		ΔT	25	25	23	20	26	25	24	21	26	25	24	21	26	25	24	21	25	25	24	20	24	23	22	19.1
		kW	4.96	5.06	5.21	5.4	5.32	5.43	5.60	5.8	5.64	5.76	5.94	6.1	5.92	6.05	6.24	6.4	6.16	6.29	6.49	6.7	6.37	6.50	6.71	6.9
		HI PR	228	246	260	270.8	256	276	291	303.9	292	314	331	345.6	332	357	377	393.6	374	402	425	442.8	413	444	469	489.3
		LO PR	106	113	123	131.0	112	119	130	138.4	116	124	135	143.8	122	130	142	151.1	128	136	149	158.3	132	141	154	163.8

IDB = Entering Indoor Dry Bulb Temperature

Shaded area reflects AHRI Ratings conditions

kW = Total system power

High and low pressures are measured at the liquid and suction service ports.

Amps: Unit amps (comp.+ evaporator + condenser fan motors)

Heat Kit Electrical Data (Blower Only, Heat Mode) — 3 Tons

Model and Heat Kit Usage	MCA[1] at 208 / 240V	MOP[2] (amps) at 208 / 240V	Actual kW & BTU at 240V	Recommended Airflow Range
CPC036***1D***	25	40	---	---
EHK1-10	48 / 55	50 / 60	10	1250-1350 CFM
EHK1-15	70 / 81	80 / 90	15	1400-1440 CFM
CPC036***3D***	17	25	---	---
EHK3-10	29 / 33	30 / 35	10	1250-1350 CFM
EHK3-15	42 / 48	45 / 50	15	1400-1440 CFM
CPC036***3B***	18	25	---	---
EHK3-10	30 / 33	35 / 35	10	1250-1350 CFM
EHK3-15	43 / 48	45 / 50	15	1400-1440 CFM

Model and Heat Kit Usage	MCA[1] at 480V	MOP[2] (amps) at 480V	Actual kW & BTU at 480V	Recommended Airflow Range
CPC036***4B***	10	15	---	---
EHK4-10	17	20	10	1250-1350 CFM
EHK4-15	25	25	15	1400-1440 CFM

Model and Heat Kit Usage	MCA[1] at 575V	MOP[2] (amps) at 575V	Actual kW & BTU at 575V	Recommended Airflow Range
CPC036***7B***	8	15	---	---
EHK7-10	15	20	10	1250-1350 CFM
EHK7-15	22	25	15	1400-1440 CFM

[1] Minimum Circuit Ampacity
[2] Maximum Overcurrent Protection device

kW Correction Factor

kW Correction Factor for 1- & 3-Phase Units					
Supply Voltage	240	230	220	210	208
Correction Factor	1	0.93	0.82	0.78	0.76

Multiply rated kW by correction factor to get actual kW

kW Correction Factor for 480V Units			
Actual Voltage	460	440	430
Correction Factor	0.92	0.84	0.8

For other voltage use voltage^2 / 480^2

kW Correction Factor for 575V Units			
Supply Voltage	560	550	540
Correction Factor	0.95	0.91	0.88

Multiply rated kW by correction factor to get actual kW

Minimum Airflow for Electric Heat

Heater Size	Minimum CFM	
	A Models	B Models
10 kW	1,250	1,250
15 kW	1,400	1,250

Heat Kit Electrical Data (Blower Only, Heat Mode) — 4 Tons

Model and Heat Kit Usage	MCA[1] at 208 / 240V	MOP[2] (amps) at 208 / 240V	Actual kW & BTU at 240V	Recommended Airflow Range
CPC048***1D***	29	45	---	---
EHK1-10	48 / 56	50 / 60	10	1400-1800 CFM
EHK1-15	71 / 82	80 / 90	15	1575-1800 CFM
EHK1-18	84 / 97	90 / 100	18	1575-1800 CFM
CPC048***3D***	21	30	---	---
EHK3-10	29 / 34	35 / 35	10	1400-1800 CFM
EHK3-15	42 / 49	45 / 50	15	1575-1800 CFM
EHK3-18	50 / 58	60 / 60	18	1575-1800 CFM
CPC048***3B***	22	30	---	---
EHK3-10	30 / 35	35 / 35	10	1400-1800 CFM
EHK3-15	43 / 50	45 / 50	15	1575-1800 CFM
EHK3-18	51 / 59	60 / 60	18	1575-1800 CFM

Model and Heat Kit Usage	MCA[1] at 480V	MOP[2] (amps) at 480V	Actual kW & BTU at 480V	Recommended Airflow Range
CPC048***4B***	10	15	---	---
EHK4-10	17	20	10	1400-1800 CFM
EHK4-15	25	25	15	1575-1800 CFM
EHK4-18	29	30	18	1575-1800 CFM

Model and Heat Kit Usage	MCA[1] at 575V	MOP[2] (amps) at 575V	Actual kW & BTU at 575V	Recommended Airflow Range
CPC048***7B***	8	15	---	---
EHK7-10	15	20	10	1400-1800 CFM
EHK7-15	22	25	15	1575-1800 CFM
EHK7-18	25	30	18	1575-1800 CFM

[1] Minimum Circuit Ampacity
[2] Maximum Overcurrent Protection device

kW Correction Factor

kW Correction Factor for 1- & 3-Phase Units					
Supply Voltage	240	230	220	210	208
Correction Factor	1	0.93	0.82	0.78	0.76

Multiply rated kW by correction factor to get actual kW

kW Correction Factor for 480V Units			
Actual Voltage	460	440	430
Correction Factor	0.92	0.84	0.8

For other voltage use voltage^2 / 480^2

kW Correction Factor for 575V Units			
Supply Voltage	560	550	540
Correction Factor	0.95	0.91	0.88

Multiply rated kW by correction factor to get actual kW.

Minimum Airflow for Electric Heat

Heater Size	Minimum CFM	
	A Models	B Models
10 kW	1,400	1,300
15 kW	1,575	1,400
18 kW	1,575	1,400

Heat Kit Electrical Data (Blower Only, Heat Mode) — 5 Tons

Model and Heat Kit Usage	MCA[1] at 208 / 240V	MOP[2] (amps) at 208 / 240V	Actual kW & BTU at 240V	Recommended Airflow Range	Speed Tap
CPC060***1D***	42	60	---	---	
EHK1-10	53 / 62	60 / 70	10	1750-2250 CFM	T3, T4, T5
EHK1-15	76 / 88	80 / 90	15	1750-2250 CFM	T3, T4, T5
EHK1-20	99 / 114	100 / 120	20	1850-2250 CFM	T5
CPC060***3D***	29	45	---	---	
EHK3-10	34 / 40	35 / 45	10	1750-2250 CFM	T3, T4, T5
EHK3-15	47 / 55	50 / 60	15	1750-2250 CFM	T3, T4, T5
EHK3-20	60 / 70	70 / 70	20	1850-2250 CFM	T5
CPC060***3B***	25	40	---	---	---
EHK3-10	30 / 35	35 / 40	10	1750 - 2250 CFM	---
EHK3-15	43 / 50	45 / 50	15	1750 - 2250 CFM	---
EHK3-20	56 / 65	60 / 70	20	1850 - 2250 CFM	---

Model and Heat Kit Usage	MCA[1] at 480V	MOP[2] (amps) at 480V	Actual kW & BTU at 480V	Recommended Airflow Range
CPC060***4B***	12	20	---	---
EHK4-10	19	20	10	1750 - 2250 CFM
EHK4-15	25	25	15	1750 - 2250 CFM
EHK4-20	35	35	20	1850 - 2250 CFM

Model and Heat Kit Usage	MCA[1] at 575V	MOP[2] (amps) at 575V	Actual kW & BTU at 575V	Recommended Airflow Range
CPC060***7B***	10	15	---	---
EHK7-10	15	20	10	1750-2250 CFM
EHK7-15	22	25	15	1750-2250 CFM
EHK7-20	28	30	20	1850-2250 CFM
EHK7-25	34	35	25	---

[1] Minimum Circuit Ampacity
[2] Maximum Overcurrent Protection Device

kW Correction Factor

kW Correction Factor for 1- & 3-Phase Units					
Supply Voltage	240	230	220	210	208
Correction Factor	1	0.93	0.82	0.78	0.76

kW Correction Factor for 480V Units			
Actual Voltage	460	440	430
Correction Factor	0.92	0.84	0.8

For other voltage use voltage^2 / 480^2

kW Correction Factor for 575V Units			
Supply Voltage	560	550	540
Correction Factor	0.95	0.91	0.88

Multiply rated kW by correction factor to get actual kW

Minimum Airflow for Electric Heat

Heater Size	Minimum CFM	
	A Models	B Models
10	1,750	1,700
15	1,750	1,700
20	1,850	1,880

Heat Kit Electrical Data (Blower Only, Heat Mode) — 6 Tons

Model and Heat Kit Usage	MCA[1] @ 208 / 240V	MOP[2] (amps) @ 208 / 240V	Actual kW & BTU @ 240V	Recommended Airflow Range
CPC072*3B*** **	31	45	---	---
EHK3-10	36	45	10	2,100 - 2,700 CFM
EHK3-15	51	60	15	2,100 - 2,700 CFM
EHK3-20	66	70	20	2,100 - 2,700 CFM
EHK3-25	81	90	25	2,100 - 2,700 CFM

Model and Heat Kit Usage	MCA[1] @ 480V	MOP[2] (amps) @ 480V	Actual kW & BTU @ 480V	Recommended Airflow Range
CPC072*4B*** **	16	25	---	---
EHK4-10	18	25	10	2,100 - 2,700 CFM
EHK4-15	26	30	15	2,100 - 2,700 CFM
EHK4-20	33	35	20	2,100 - 2,700 CFM
EHK4-25	41	45	25	2,100 - 2,700 CFM

Model and Heat Kit Usage	MCA[1] @ 575V	MOP[2] (amps) @ 575V	Actual kW & BTU @ 575V	Recommended Airflow Range
CPC072*7B*** **	13	15	---	---
EHK7-10	15	20	10	2,100 - 2,700 CFM
EHK7-15	22	25	15	2,100 - 2,700 CFM
EHK7-20	28	30	20	2,100 - 2,700 CFM
EHK7-25	34	35	25	2,100 - 2,700 CFM

[1] Minimum Circuit Ampacity

[2] Maximum Overcurrent Protection Device

Note: All heaters have single-point entry kit

kW Correction Factor for 3-Phase Units				
Supply Voltage	240	230	220	210
Correction Factor	1	0.92	0.84	0.77

kW Correction Factor for 480V Units			
Actual Voltage	460	440	430
Correction Factor	0.92	0.84	0.8

For other voltage use voltage^2 / 480^2

kW Correction Factor for 575V Units			
Supply Voltage	560	550	540
Correction Factor	0.95	0.91	0.88

Multiply rated kW by correction factor to get actual kW.

Minimum Airflow for Electric Heat

Heater Size	Minimum CFM
10	2,100
15	2,100
20	2,100
25	2,100

Airflow Data — CPC036

Direct Drive — Horizontal

CFM	Static	Amps	Watts	RPM	Speed Tap
1296	0.1	1.67	356	764	Low
1245	0.2	1.60	334	830	
1174	0.3	1.56	325	861	
1103	0.4	1.52	316	891	
1013	0.5	1.46	300	935	
1502	0.1	2.10	456	836	Med
1449	0.2	2.06	444	864	
1396	0.3	2.02	432	891	
1335	0.4	1.97	418	916	
1273	0.5	1.91	404	940	
1153	0.6	1.83	380	973	
996	0.7	1.71	346	1017	
1516	0.2	2.36	506	940	High
1454	0.3	2.31	496	960	
1392	0.4	2.26	486	979	
1273	0.5	2.17	458	1006	
1183	0.6	2.09	441	1023	
1092	0.7	2.02	424	1039	
920	0.8	1.90	390	1067	

Direct Drive — Down Shot

CFM	Static	Amps	Watts	RPM	Speed Tap
1287	0.1	1.66	350	770	Low
1233	0.2	1.63	342	815	
1176	0.3	1.59	332	858	
1107	0.4	1.55	320	891	
1044	0.5	1.51	312	924	
965	0.6	1.45	296	957	
1476	0.1	2.08	446	866	Med
1421	0.2	2.03	432	885	
1334	0.3	1.96	414	918	
1255	0.4	1.90	396	945	
1180	0.5	1.84	386	971	
1085	0.6	1.78	368	990	
964	0.7	1.70	344	1023	
1455	0.3	2.31	490	962	High
1367	0.4	2.25	476	984	
1277	0.5	2.16	454	1006	
1180	0.6	2.09	438	1025	
1080	0.7	2.02	418	1039	
922	0.8	1.90	386	1067	

Notes:
- Assumes dry coil with filter in place
- SCFM correction for wet coil = 4%

Airflow Data — CPC036 (cont.)

Standard Belt Drive — Horizontal

ESP (" W.C.)	Turns Open											
	0		1		2		3		4		5	
	CFM	BHP	CFM	BHP	CFM	BHP	CFM	BHP	CFM	BHP	CFM	BHP
0.2	---	---	---	---	---	---	---	---	1658	0.35	1489	0.28
0.4	---	---	---	---	---	---	1560	0.36	1339	0.28	1129	0.21
0.6	---	---	1682	0.47	1436	0.36	1196	0.27	949	0.19	---	---
0.8	1581	0.50	1354	0.38	1096	0.28	828	0.18	---	---	---	---
1.0	1266	0.39	994	0.28	756	0.19	---	---	---	---	---	---
1.2	923	0.28	---	---	---	---	---	---	---	---	---	---

High-Static Belt Drive — Horizontal

ESP (" W.C.)	Turns Open											
	0		1		2		3		4		5	
	CFM	BHP	CFM	BHP	CFM	BHP	CFM	BHP	CFM	BHP	CFM	BHP
0.6	---	---	---	---	---	---	---	---	1742	0.50	1431	0.36
0.8	---	---	---	---	---	---	1626	0.52	1357	0.39	1078	0.27
1.0	---	---	---	---	1611	0.56	1315	0.42	1011	0.28	---	---
1.2	---	---	1605	0.62	1299	0.46	976	0.31	---	---	---	---
1.4	1605	0.68	1281	0.51	959	0.35	---	---	---	---	---	---
1.6	1281	0.57	981	0.41	---	---	---	---	---	---	---	---
1.8	981	0.47	---	---	---	---	---	---	---	---	---	---

Standard Belt Drive — Down Shot

ESP (" W.C.)	Turns Open											
	0		1		2		3		4		5	
	CFM	BHP	CFM	BHP	CFM	BHP	CFM	BHP	CFM	BHP	CFM	BHP
0.2	---	---	---	---	---	---	---	---	1424	0.30	1239	0.23
0.4	---	---	---	---	1520	0.39	1292	0.29	1073	0.22	779	0.14
0.6	---	---	1439	0.40	1192	0.30	944	0.21	619	0.12	---	---
0.8	1350	0.42	1101	0.31	864	0.22	---	---	---	---	---	---
1.0	1028	0.31	729	0.21	---	---	---	---	---	---	---	---
1.2	675	0.20	---	---	---	---	---	---	---	---	---	---

High-Static Belt Drive — Down Shot

ESP (" W.C.)	Turns Open											
	0		1		2		3		4		5	
	CFM	BHP	CFM	BHP	CFM	BHP	CFM	BHP	CFM	BHP	CFM	BHP
0.6	---	---	---	---	---	---	1692	0.54	1449	0.41	1173	0.29
0.8	---	---	---	---	1678	0.58	1397	0.44	1107	0.31	854	0.21
1.0	---	---	1681	0.65	1381	0.49	1078	0.34	794	0.22	---	---
1.2	1681	0.71	1362	0.54	1062	0.39	---	---	---	---	---	---
1.4	1362	0.60	1066	0.44	---	---	---	---	---	---	---	---
1.6	1066	0.50	789	0.34	---	---	---	---	---	---	---	---
1.8	789	0.40	---	---	---	---	---	---	---	---	---	---

Airflow Data —CPC048

Standard Direct Drive — Horizontal

CFM	Static	Amps	Watts	RPM	Speed Tap
1622	0.1	2.54	539	809	Low
1558	0.2	2.43	517	852	
1494	0.3	2.32	495	895	
1410	0.4	2.21	471	924	
1326	0.5	2.10	447	953	
1861	0.1	3.11	670	886	Med
1733	0.2	2.78	606	918	
1639	0.3	2.64	568	960	
1564	0.4	2.51	542	984	
1434	0.5	2.35	508	1017	
1320	0.6	2.25	482	1039	
1156	0.7	2.08	446	1067	
1984	0.1	3.34	734	949	High
1883	0.2	3.18	694	977	
1770	0.3	3.03	654	1001	
1656	0.4	2.87	620	1027	
1540	0.5	2.76	590	1044	
1415	0.6	2.62	558	1061	

Standard Direct Drive — Down Shot

CFM	Static	Amps	Watts	RPM	Speed Tap
1602	0.1	2.48	528	835	Low
1538	0.2	2.37	506	878	
1474	0.3	2.26	484	921	
1390	0.4	2.15	460	950	
1306	0.5	2.04	436	979	
1805	0.1	2.84	620	935	Med
1704	0.2	2.71	590	967	
1625	0.3	2.59	558	990	
1549	0.4	2.47	540	1012	
1437	0.5	2.38	516	1030	
1301	0.6	2.23	480	1050	
1158	0.7	2.09	444	1072	
1971	0.1	3.22	706	968	High
1828	0.2	3.03	664	998	
1744	0.3	2.94	632	1017	
1628	0.4	2.80	606	1034	
1510	0.5	2.69	582	1050	
1402	0.6	2.57	552	1067	

Notes:
- Assumes dry coil with filter in place
- SCFM correction for wet coil = 4%

Airflow Data —CPC048 (cont.)

Standard Belt Drive — Horizontal

ESP (" W.C.)	0 Turns		1 Turn		2 Turns		3 Turns		4 Turns		5 Turns	
	CFM	BHP	CFM	BHP	CFM	BHP	CFM	BHP	CFM	BHP	CFM	BHP
0.2	---	---	---	---	---	---	---	---	1943	0.52	1714	0.40
0.4	---	---	---	---	2187	0.72	1876	0.55	1566	0.40	1270	0.26
0.6	---	---	2044	0.72	1761	0.56	1444	0.40	1136	0.26	---	---
0.8	1947	0.74	1704	0.59	1335	0.40	---	---	---	---	---	---
1.0	1598	0.60	1275	0.36	---	---	---	---	---	---	---	---
1.2	1208	0.45	---	---	---	---	---	---	---	---	---	---

High-Static Belt Drive — Horizontal

ESP (" W.C.)	0 Turns		1 Turn		2 Turns		3 Turns		4 Turns		5 Turns	
	CFM	BHP	CFM	BHP	CFM	BHP	CFM	BHP	CFM	BHP	CFM	BHP
0.6	---	---	---	---	---	---	---	---	2056	0.72	1721	0.54
0.8	---	---	---	---	---	---	1996	0.77	1662	0.57	1328	0.40
1.0	---	---	---	---	1924	0.79	1603	0.61	1270	0.43	---	---
1.2	---	---	1952	0.88	1559	0.64	1210	0.44	---	---	---	---
1.4	1888	0.92	1543	0.70	1195	0.49	---	---	---	---	---	---
1.6	1557	0.77	1180	0.54	---	---	---	---	---	---	---	---
1.8	1192	0.60	---	---	---	---	---	---	---	---	---	---

Standard Belt Drive — Down Shot

ESP (" W.C.)	0 Turns		1 Turn		2 Turns		3 Turns		4 Turns		5 Turns	
	CFM	BHP	CFM	BHP	CFM	BHP	CFM	BHP	CFM	BHP	CFM	BHP
0.2	---	---	---	---	---	---	2129	0.64	1795	0.47	1550	0.35
0.4	---	---	---	---	1994	0.65	1701	0.49	1433	0.36	1163	0.22
0.6			1905	0.67	1606	0.50	1326	0.36	1025	0.22	---	---
0.8	1808	0.69	1565	0.54	1216	0.36	---	---	---	---	---	---
1.0	1473	0.55	1137	0.32	---	---	---	---	---	---	---	---
1.2	1103	0.41	---	---	---	---	---	---	---	---	---	---

High-Static Belt Drive — Down Shot

ESP (" W.C.)	0 Turns		1 Turn		2 Turns		3 Turns		4 Turns		5 Turns	
	CFM	BHP	CFM	BHP	CFM	BHP	CFM	BHP	CFM	BHP	CFM	BHP
0.6	---	---	---	---	---	---	2194	0.85	1886	0.66	1580	0.49
0.8	---	---	---	---	2113	0.86	1832	0.70	1526	0.52	1219	0.37
1.0	---	---	2182	0.98	1776	0.73	1472	0.55	1166	0.39	---	---
1.2	2053	1.00	1780	0.80	1440	0.59	1111	0.40	---	---	---	---
1.4	1759	0.86	1421	0.64	1104	0.46	---	---	---	---	---	---
1.6	1442	0.72	1095	0.50	---	---	---	---	---	---	---	---
1.8	1095	0.56	---	---	---	---	---	---	---	---	---	---

Airflow Data — CPC060******B/C*

Standard Direct Drive Motor — Horizontal

CFM	Static	Amps	Watts	RPM	Speed Tap
1355	0.1	1.57	174	599	
1281	0.2	1.66	182	651	
1235	0.3	1.76	196	693	
1168	0.4	1.81	202	726	
1118	0.5	1.94	218	775	T1
1049	0.6	2.03	232	819	
982	0.7	2.10	240	858	
922	0.8	2.14	246	885	
871	0.9	2.25	260	927	
1544	0.1	2.04	234	660	
1490	0.2	2.17	250	704	
1427	0.3	2.25	260	742	
1370	0.4	2.35	276	781	
1319	0.5	2.42	282	809	T2
1274	0.6	2.52	296	849	
1210	0.7	2.62	316	891	
1137	0.8	2.73	326	935	
1106	0.9	2.77	336	957	
2099	0.1	4.13	516	825	
2068	0.2	4.25	536	852	
2029	0.3	4.37	552	885	
1971	0.4	4.48	568	913	
1911	0.5	4.61	586	950	T3
1876	0.6	4.73	604	973	
1821	0.7	4.86	622	1012	
1792	0.8	4.91	630	1028	
1740	0.9	5.03	648	1067	
2233	0.1	4.76	608	863	
2168	0.2	4.91	628	896	
2125	0.3	5.02	640	924	
2070	0.4	5.14	660	951	
2050	0.5	5.27	678	979	T4
1980	0.6	5.41	696	1012	
1954	0.7	5.47	704	1034	
1893	0.8	5.60	724	1067	
1852	0.9	5.70	736	1089	
2322	0.1	5.44	710	904	
2294	0.2	5.55	726	934	
2254	0.3	5.68	742	958	
2201	0.4	5.80	766	990	
2147	0.5	5.93	782	1017	T5
2117	0.6	6.01	788	1039	
2081	0.7	6.12	808	1060	
2017	0.8	6.22	822	1094	
1932	0.9	6.10	804	1111	

Standard Direct Drive Motor — Down Shot

CFM	Static	Amps	Watts	RPM	Speed Tap
1334	0.1	1.65	180	627	
1286	0.2	1.75	192	665	
1212	0.3	1.83	202	715	
1144	0.4	1.94	216	759	
1077	0.5	1.99	222	792	T1
1039	0.6	2.10	238	830	
953	0.7	2.17	248	874	
904	0.8	2.27	258	913	
825	0.9	2.30	266	940	
1512	0.1	2.12	240	682	
1469	0.2	2.24	254	720	
1397	0.3	2.31	264	759	
1333	0.4	2.44	282	803	
1285	0.5	2.54	296	836	T2
1221	0.6	2.59	304	874	
1173	0.7	2.72	322	913	
1118	0.8	2.77	328	946	
1049	0.9	2.90	344	984	
2053	0.1	4.27	540	869	
2014	0.2	4.39	558	896	
1999	0.3	4.60	576	929	
1947	0.4	4.68	588	957	
1897	0.5	4.79	608	989	T3
1857	0.6	4.87	620	1012	
1763	0.7	4.99	640	1050	
1741	0.8	5.06	650	1072	
1669	0.9	5.19	668	1105	
2137	0.1	4.95	634	913	
2093	0.2	5.07	652	940	
2095	0.3	5.19	670	962	
2026	0.4	5.28	682	990	
1980	0.5	5.40	698	1018	T4
1961	0.6	5.49	720	1039	
1914	0.7	5.58	732	1072	
1845	0.8	5.70	742	1100	
1766	0.9	5.69	740	1127	
2299	0.1	5.70	742	942	
2233	0.2	5.80	748	969	
2217	0.3	5.90	768	990	
2157	0.4	6.07	786	1018	
2131	0.5	6.12	804	1045	T5
2060	0.6	6.21	816	1073	
2015	0.7	6.30	820	1095	
1940	0.8	6.27	816	1111	
1862	0.9	6.13	790	1128	

Notes

Assumes dry coil with filter in place; SCFM correction for wet coil = 4%

Five-ton models are shipped from the factory with speed tap set on T4.

Airflow Data — CPC060******B/C* (cont.)

Standard Belt Drive — Horizontal

ESP (" W.C.)	Turns Open											
	0		1		2		3		4		5	
	CFM	BHP	CFM	BHP	CFM	BHP	CFM	BHP	CFM	BHP	CFM	BHP
0.2	---	---	---	---	---	---	---	---	2420	0.79	2198	0.64
0.4	---	---	---	---	2605	1.02	2358	0.84	2133	0.67	1874	0.52
0.6	---	---	2526	1.06	2300	0.88	2026	0.70	1806	0.55	---	---
0.8	2529	1.15	2252	0.93	1975	0.73	1670	0.54	---	---	---	---
1.0	2233	0.99	1943	0.78	1628	0.57	---	---	---	---	---	---
1.2	1907	0.83	1582	0.61	---	---	---	---	---	---	---	---

High-Static Belt Drive — Horizontal

ESP (" W.C.)	Turns Open											
	0		1		2		3		4		5	
	CFM	BHP	CFM	BHP	CFM	BHP	CFM	BHP	CFM	BHP	CFM	BHP
0.6	---	---	---	---	---	---	---	---	---	---	2323	0.92
0.8	---	---	---	---	---	---	---	---	2315	1.00	2009	0.77
1.0	---	---	---	---	---	---	2308	1.09	1992	0.84	1666	0.60
1.2	---	---	---	---	2338	1.21	1992	0.92	1646	0.66	---	---
1.4			2359	1.32	2025	1.02	1648	0.72	---	---	---	---
1.6	2404	1.45	2056	1.13	1684	0.82	---	---	---	---	---	---
1.8	2088	1.24	1722	0.92	---	---	---	---	---	---	---	---

Standard Belt Drive — Down Shot

ESP (" W.C.)	Turns Open											
	0		1		2		3		4		5	
	CFM	BHP	CFM	BHP	CFM	BHP	CFM	BHP	CFM	BHP	CFM	BHP
0.2	---	---	---	---	2579	1.01	2368	0.85	2175	0.69	1961	0.55
0.4	---	---	2513	1.05	2318	0.89	2089	0.73	1906	0.59	1666	0.44
0.6	2514	1.14	2276	0.94	2045	0.77	1797	0.60	1604	0.47	---	---
0.8	2261	1.01	2017	0.82	1760	0.63	---	---	---	---	---	---
1.0	1989	0.87	1730	0.68	---	---	---	---	---	---	---	---
1.2	1695	0.72	---	---	---	---	---	---	---	---	---	---

High-Static Belt Drive — Down Shot

ESP (" W.C.)	Turns Open											
	0		1		2		3		4		5	
	CFM	BHP	CFM	BHP	CFM	BHP	CFM	BHP	CFM	BHP	CFM	BHP
0.6	---	---	---	---	---	---	---	---	2331	1.01	2072	0.80
0.8	---	---	---	---	---	---	2324	1.10	2059	0.87	1791	0.66
1.0	---	---	---	---	2350	1.21	2058	0.95	1774	0.72	---	---
1.2	---	---	2367	1.33	2086	1.06	1776	0.79	---	---	---	---
1.4	2404	1.45	2111	1.17	1805	0.89	---	---	---	---	---	---
1.6	2136	1.28	1835	0.99	---	---	---	---	---	---	---	---
1.8	1868	1.10	---	---	---	---	---	---	---	---	---	---

Airflow Data — CPC072

Standard Belt Drive — Horizontal

ESP (In W.C.)	0 Turns		1 Turn		2 Turns		3 Turns		4 Turns		5 Turns	
	CFM	BHP	CFM	BHP	CFM	BHP	CFM	BHP	CFM	BHP	CFM	BHP
0.2	---	---	---	---	---	---	2784	1.30	2582	0.83	2411	0.79
0.4	---	---	---	---	2814	1.34	2620	1.19	2342	0.72	2105	0.66
0.6	---	---	2665	1.34	2583	1.19	2398	1.06	2103	0.62	1902	0.57
0.8	2689	1.38	2492	1.22	2370	1.07	2142	0.91	1816	0.51	---	---
1	2438	1.22	2275	1.09	2098	0.92	1883	0.78	---	---	---	---
1.2	2250	1.10	1996	0.92	---	---	---	---	---	---	---	---

Standard Belt Drive — Down Shot

ESP (In W.C.)	0 Turns		1 Turn		2 Turns		3 Turns		4 Turns		5 Turns	
	CFM	BHP	CFM	BHP	CFM	BHP	CFM	BHP	CFM	BHP	CFM	BHP
0.2	---	---	---	---	2771	1.27	2567	1.05	2421	0.88	2220	0.71
0.4	---	---	2753	1.38	2573	1.15	2382	0.95	2186	0.77	1980	0.61
0.6	2655	1.42	2548	1.24	2360	1.02	2119	0.81	1934	0.65	---	---
0.8	2470	1.30	2331	1.11	2111	0.89	1868	0.69	---	---	---	---
1	2296	1.18	2078	0.96	1840	0.75	---	---	---	---	---	---
1.2	2040	1.02	---	---	---	---	---	---	---	---	---	---

High-Static Belt Drive — Horizontal

ESP (In W.C.)	0 Turns		1 Turn		2 Turns		3 Turns		4 Turns		5 Turns	
	CFM	BHP	CFM	BHP	CFM	BHP	CFM	BHP	CFM	BHP	CFM	BHP
0.6	---	---	---	---	---	---	---	---	2746	1.38	2515	1.12
0.8	---	---	---	---	---	---	2721	1.47	2494	1.21	2261	0.97
1	---	---	---	---	2689	1.56	2500	1.32	2255	1.06	1994	0.83
1.2	---	---	2752	1.74	2473	1.40	2252	1.15	1996	0.91	---	---
1.4	2802	1.88	2487	1.53	2286	1.27	2037	1.02	---	---	---	---
1.6	2553	1.67	2308	1.40	1997	1.08	---	---	---	---	---	---
1.8	2355	1.51	2014	1.19	---	---	---	---	---	---	---	---
2	2055	1.29	---	---	---	---	---	---	---	---	---	---

High-Static Belt Drive — Down Shot

ESP (In W.C.)	0 Turns		1 Turn		2 Turns		3 Turns		4 Turns		5 Turns	
	CFM	BHP	CFM	BHP	CFM	BHP	CFM	BHP	CFM	BHP	CFM	BHP
0.6	---	---	---	---	2793	1.64	2603	1.39	2450	1.18	2270	0.97
0.8	---	---	2903	1.87	2696	1.57	2369	1.23	2236	1.05	1987	0.82
1	2776	1.86	2682.5	1.69	2445	1.38	2196	1.12	1968	0.90	---	---
1.2	2599	1.71	2539	1.57	2310	1.29	1932	0.96	---	---	---	---
1.4	2424	1.57	2305	1.40	2032	1.11	---	---	---	---	---	---
1.6	2172	1.38	2017	1.19	---	---	---	---	---	---	---	---
1.8	1953	1.22	---	---	---	---	---	---	---	---	---	---

Dimensions

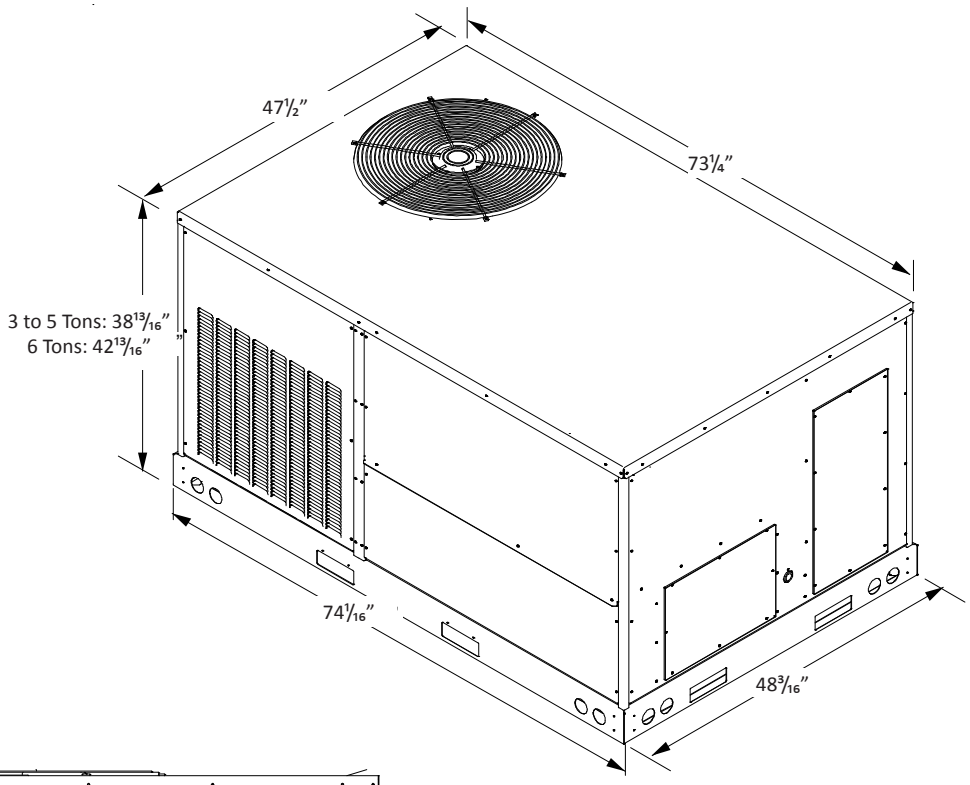

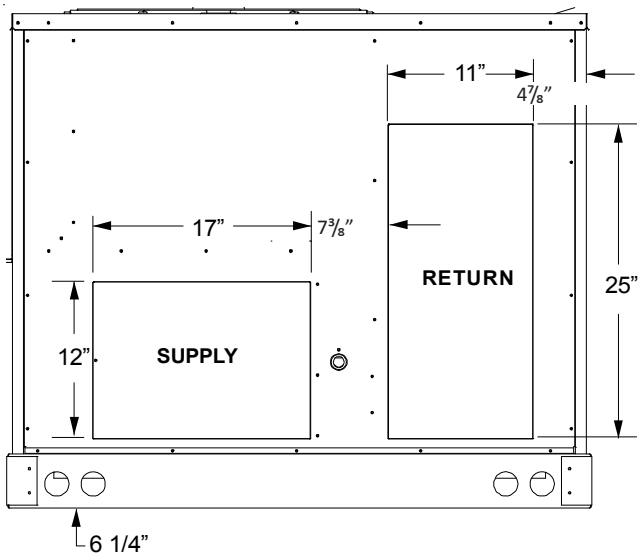

Horizontal Discharge

Unit Clearances

Maintain an adequate clearance around the unit for safety, service, maintenance, and proper unit operation. Leave a total clearance of 75” on the main control panel side of the unit for possible removal of fan shaft, coil, electric heat, and gas furnace. Leave a clearance of 48” on all other sides of the unit for possible compressor removal or service access, and to ensure proper ventilation and condenser airflow. Do not install the unit Beneath any obstruction. Install the unit away from all building exhausts to inhibit ingestion of exhaust air into the unit’s fresh-air intake.

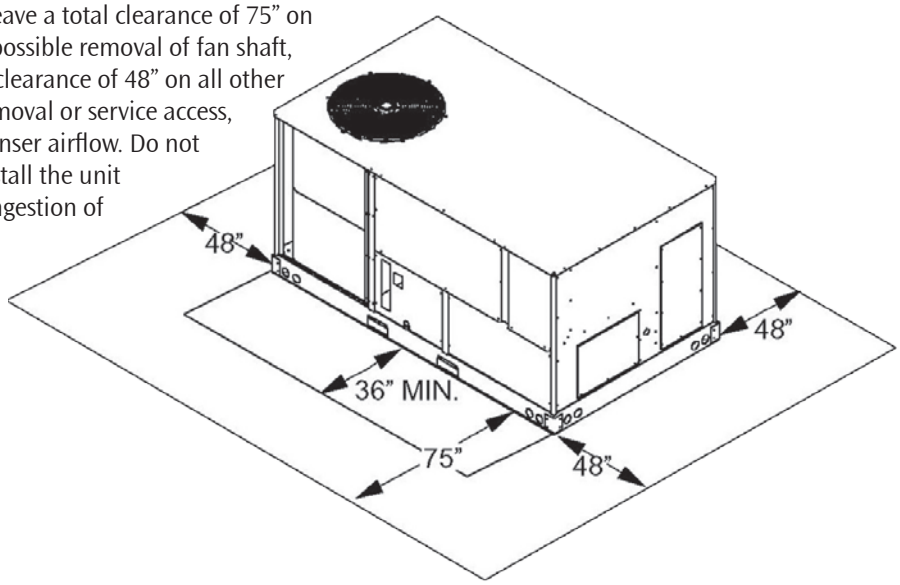

Electrical Entrance Locations

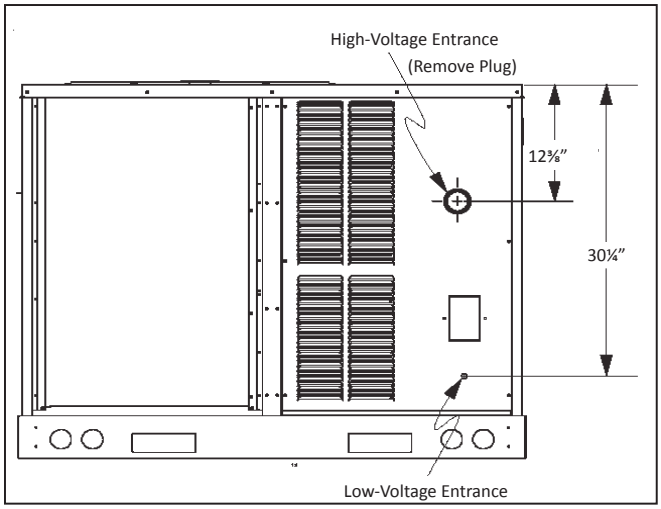

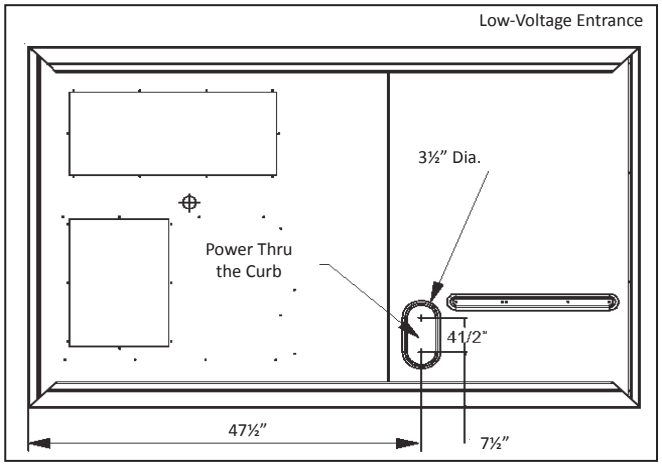

Roof Curb Installation — Rigging

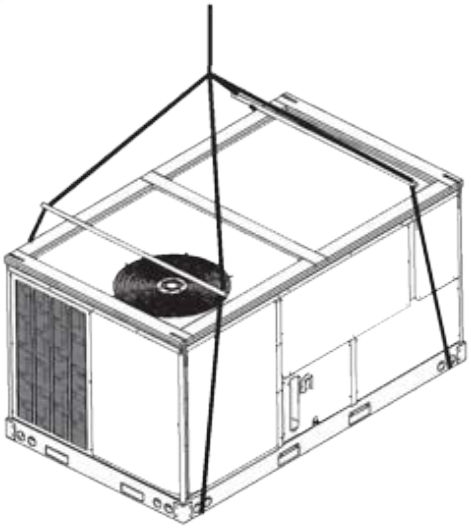

Provisions for forks have been included in the unit base frame. No other fork locations are approved.

- Unit must be lifted by the four lifting holes located at the base frame corners.
- Lifting cables should be attached to the unit with shackles.
- The distance between the crane hook and the top of the unit must not be less than 60”.
- Two spreader bars must span over the unit to prevent damage to the cabinet by the lift cables. Spreader bars must be of sufficient length so that cables do not come in contact with the unit during transport. Remove wood struts mounted beneath unit base frame before setting unit on roof curb. These struts are intended to protect unit base frame from fork lift damage. To remove the struts, extract the sheet metal retainers and pull the struts through the base of the unit. Refer to rigging label on the unit.

Important: If using bottom discharge with roof curb, duct-work should be attached to the curb prior to installing the unit. Duct-work dimensions are shown in Roof Curb Installation Instructions Manual.

Refer to the Roof Curb Installation Instructions for proper curb installation. Curbing must be installed in compliance with the National Roofing Contractors Association Manual.

Lower unit carefully onto roof mounting curb. While rigging the unit, the center of gravity will cause the condenser end to be lower than the supply air end.

Bring condenser end of unit into alignment with the curb. With condenser end of the unit resting on curb member and using curb as a fulcrum, lower opposite end of the unit until entire unit is seated on the curb. When a rectangular cantilever curb is used, take care to center the unit. Check for proper alignment and orientation of supply and return openings with duct.

To assist in determining rigging requirements, unit weights are shown below.

Corner & Center-of-Gravity Locations

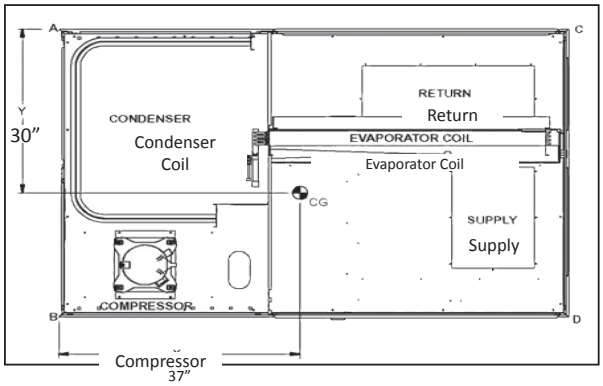

Unit Weights	3-Ton Weights	4-Ton Weights	5-Ton Weights	6-Ton Weights
Corner Weight (A)	115	120	130	150
Corner Weight (B)	150	150	160	190
Corner Weight (C)	105	105	115	130
Corner Weight (D)	130	135	150	170
Unit Shipping Weight	525	540	580	665
Unit Operating Weight	500	515	555	640

Note: Weights are calculated without accessories installed.

Curb installations must comply with local codes and should follow the established guidelines of the National Roofing Contractors Association.

Proper unit installation requires that the roof curb be firmly and permanently attached to the roof structure. Check for adequate fastening method prior to setting the unit on the curb.

Full perimeter roof curbs are available from the factory and are shipped unassembled. The installing contractor is responsible for field assembly, squaring, leveling, and mounting on the roof structure. All required hardware necessary for the assembly of the sheet metal curb is included in the curb accessory package.

- Determine sufficient structural support before locating and mounting the curb and package unit.
- Duct-work must be constructed using industry guidelines. The duct-work must be placed into the roof curb before mounting the package unit. Our full perimeter curbs include duct connection frames to be assembled with the curb. Cantilevered-type curbs are not available from the factory.
- Contractor furnishes curb insulation, cant strips, flashing, and general roofing material.
- Support curbs on parallel sides with roof members. To prevent damage to the unit, the roof members cannot penetrate supply and return duct openings.

Note: The unit and curb accessories are designed to allow Down Shot duct installation before unit placement. Duct installation after unit placement is not recommended. See the manual shipped with the roof curb for assembly and installation instructions.

WIRING DIAGRAM — CPC036/48*1D (SINGLE PHASE, DIRECT DRIVE)

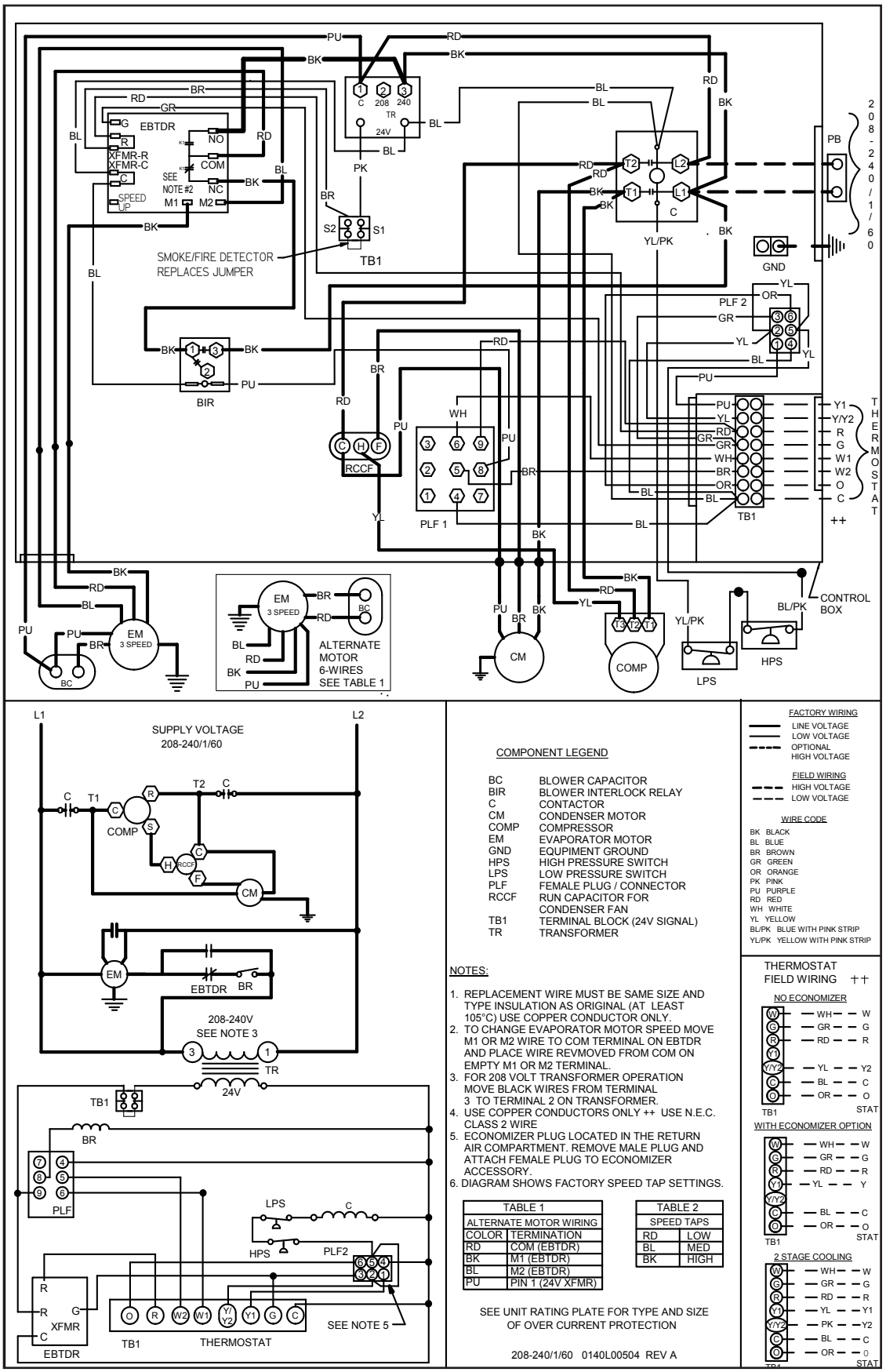

COMPONENT LEGEND

BC	BLOWER CAPACITOR
BIR	BLOWER INTERLOCK RELAY
C	CONTACTOR
CM	CONDENSER MOTOR
COMP	COMPRESSOR
EM	EVAPORATOR MOTOR
GND	EQUIPMENT GROUND
HPS	HIGH PRESSURE SWITCH
LPS	LOW PRESSURE SWITCH
PLF	FEMALE PLUG / CONNECTOR
RCCF	RUN CAPACITOR FOR CONDENSER FAN
TB1	TERMINAL BLOCK (24V SIGNAL)
TR	TRANSFORMER

NOTES:

1. REPLACEMENT WIRE MUST BE SAME SIZE AND TYPE INSULATION AS ORIGINAL (AT LEAST 105°C) USE COPPER CONDUCTOR ONLY.
2. TO CHANGE EVAPORATOR MOTOR SPEED MOVE M1 OR M2 WIRE TO COM TERMINAL ON EBTDR AND PLACE WIRE REVMOVED FROM COM ON EMPTY M1 OR M2 TERMINAL.
3. FOR 208 VOLT TRANSFORMER OPERATION MOVE BLACK WIRES FROM TERMINAL 3 TO TERMINAL 2 ON TRANSFORMER.
4. USE COPPER CONDUCTORS ONLY ++ USE N.E.C. CLASS 2 WIRE
5. ECONOMIZER PLUG LOCATED IN THE RETURN AIR COMPARTMENT. REMOVE MALE PLUG AND ATTACH FEMALE PLUG TO ECONOMIZER ACCESSORY.
6. DIAGRAM SHOWS FACTORY SPEED TAP SETTINGS.

TABLE 1

ALTERNATE MOTOR WIRING	
COLOR	TERMINATION
RD	COM (EBTDR)
BK	M1 (EBTDR)
BL	M2 (EBTDR)
PU	PIN 1 (24V XFMR)

TABLE 2

SPEED TAPS	
RD	LOW
BL	MED
BK	HIGH

SEE UNIT RATING PLATE FOR TYPE AND SIZE OF OVER CURRENT PROTECTION

208-240/1/60 0140L00504 REV A

FACTORY WIRING
- LINE VOLTAGE
- LOW VOLTAGE
- OPTIONAL HIGH VOLTAGE

FIELD WIRING
- HIGH VOLTAGE
- LOW VOLTAGE

WIRE CODE

BK BLACK
BL BLUE
BR BROWN
GR GREEN
OR ORANGE
PK PINK
PU PURPLE
RD RED
WH WHITE
YL YELLOW
BL/PK BLUE WITH PINK STRIP
YL/PK YELLOW WITH PINK STRIP

THERMOSTAT FIELD WIRING ++

NO ECONOMIZER

WITH ECONOMIZER OPTION

2 STAGE COOLING

WARNING

High Voltage: Disconnect all power before servicing or installing this unit. Multiple power sources may be present. Failure to do so may cause property damage, personal injury, or death.

Wiring is subject to change. Always refer to the wiring diagram or the unit for the most up-to-date wiring.

WIRING DIAGRAM — CPC036/48*3D (THREE PHASE, DIRECT DRIVE)

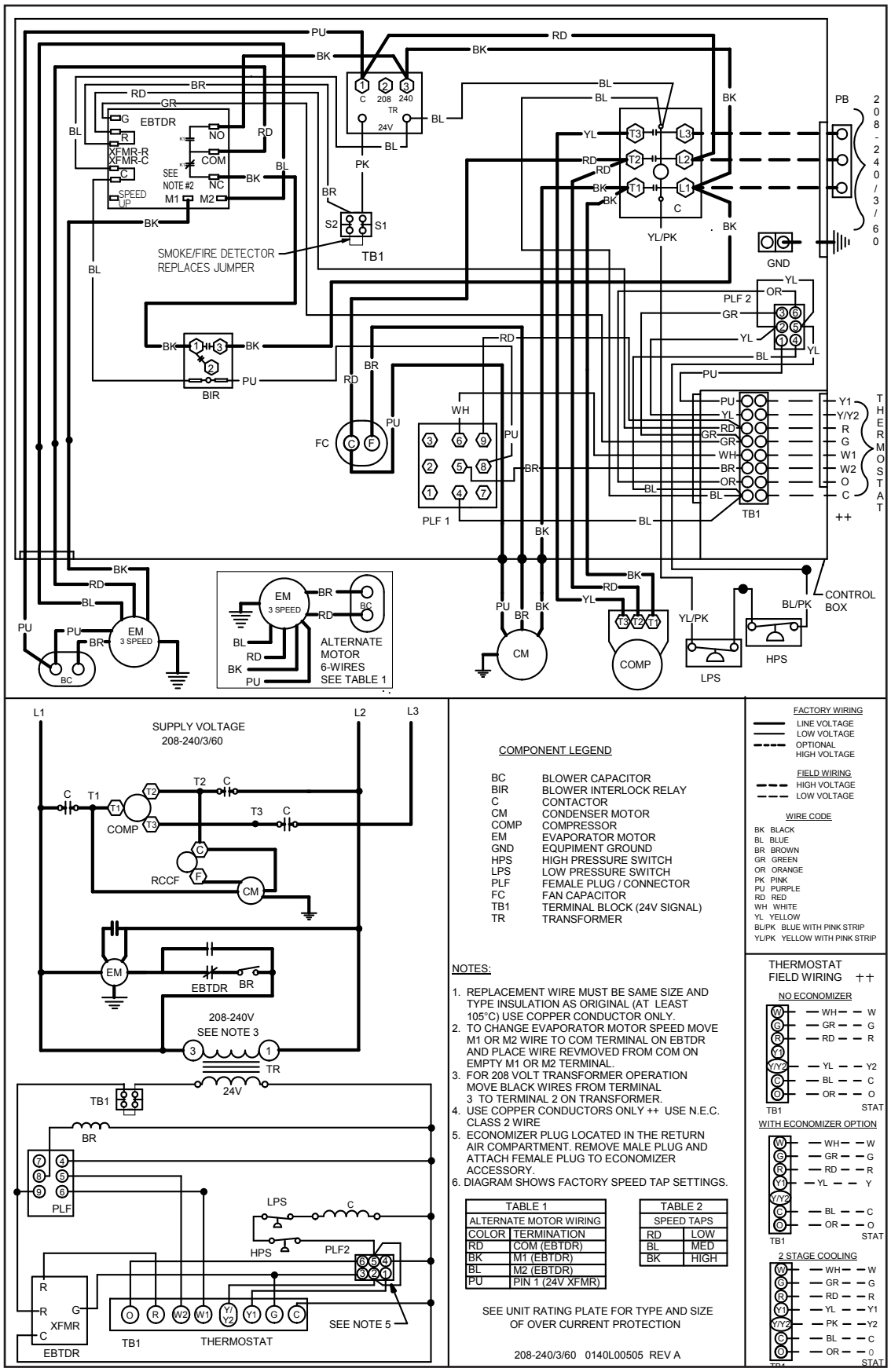

COMPONENT LEGEND

BC	BLOWER CAPACITOR
BIR	BLOWER INTERLOCK RELAY
C	CONTACTOR
CM	CONDENSER MOTOR
COMP	COMPRESSOR
EM	EVAPORATOR MOTOR
GND	EQUIPMENT GROUND
HPS	HIGH PRESSURE SWITCH
LPS	LOW PRESSURE SWITCH
PLF	FEMALE PLUG / CONNECTOR
FC	FAN CAPACITOR
TB1	TERMINAL BLOCK (24V SIGNAL)
TR	TRANSFORMER

NOTES:

1. REPLACEMENT WIRE MUST BE SAME SIZE AND TYPE INSULATION AS ORIGINAL (AT LEAST 105°C) USE COPPER CONDUCTOR ONLY.
2. TO CHANGE EVAPORATOR MOTOR SPEED MOVE M1 OR M2 WIRE TO COM TERMINAL ON EBTDR AND PLACE WIRE REVMOVED FROM COM ON EMPTY M1 OR M2 TERMINAL.
3. FOR 208 VOLT TRANSFORMER OPERATION MOVE BLACK WIRES FROM TERMINAL 3 TO TERMINAL 2 ON TRANSFORMER.
4. USE COPPER CONDUCTORS ONLY ++ USE N.E.C. CLASS 2 WIRE
5. ECONOMIZER PLUG LOCATED IN THE RETURN AIR COMPARTMENT. REMOVE MALE PLUG AND ATTACH FEMALE PLUG TO ECONOMIZER ACCESSORY.
6. DIAGRAM SHOWS FACTORY SPEED TAP SETTINGS.

TABLE 1
ALTERNATE MOTOR WIRING

COLOR	TERMINATION
RD	COM (EBTDR)
BK	M1 (EBTDR)
BL	M2 (EBTDR)
PU	PIN 1 (24V XFMR)

TABLE 2
SPEED TAPS

RD	LOW
BL	MED
BK	HIGH

SEE UNIT RATING PLATE FOR TYPE AND SIZE OF OVER CURRENT PROTECTION

208-240/3/60 0140L00505 REV A

FACTORY WIRING
LINE VOLTAGE
LOW VOLTAGE
OPTIONAL HIGH VOLTAGE

FIELD WIRING
HIGH VOLTAGE
LOW VOLTAGE

WIRE CODE

BK	BLACK
BL	BLUE
BR	BROWN
GR	GREEN
OR	ORANGE
PK	PINK
PU	PURPLE
RD	RED
WH	WHITE
YL	YELLOW
BL/PK	BLUE WITH PINK STRIP
YL/PK	YELLOW WITH PINK STRIP

THERMOSTAT FIELD WIRING ++

NO ECONOMIZER

WITH ECONOMIZER OPTION

2 STAGE COOLING

WARNING

High Voltage: Disconnect all power before servicing or installing this unit. Multiple power sources may be present. Failure to do so may cause property damage, personal injury, or death.

Wiring is subject to change. Always refer to the wiring diagram or the unit for the most up-to-date wiring.

WIRING DIAGRAM — CPC036-72*3B (THREE PHASE, BELT DRIVE)

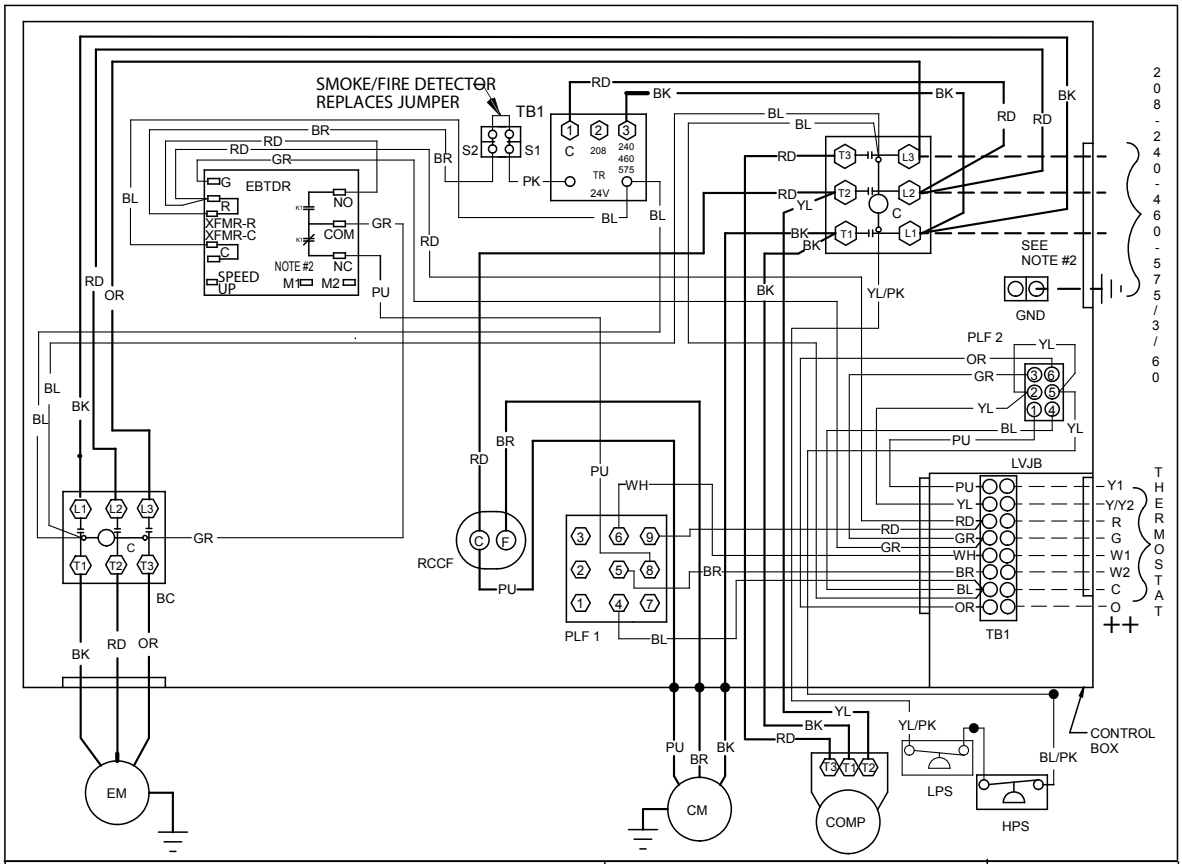

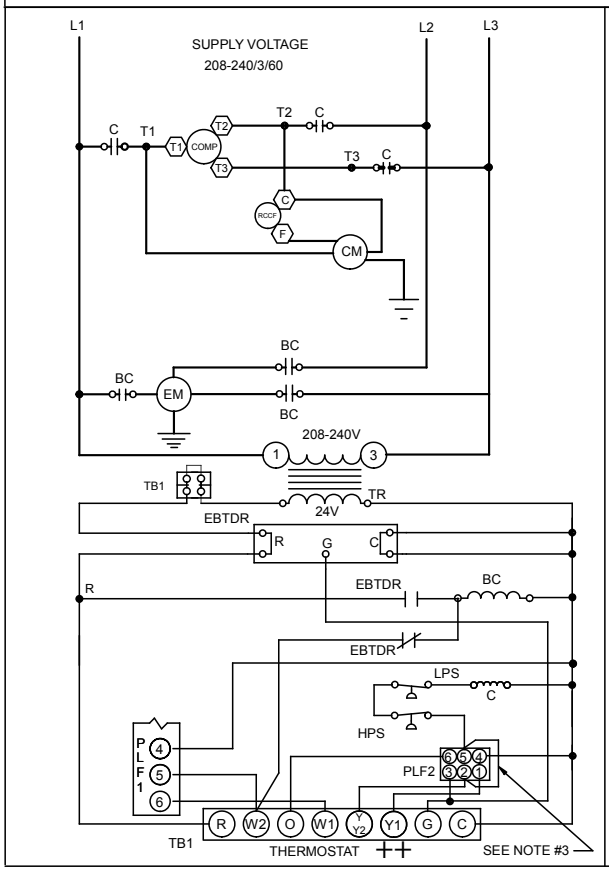

COMPONENT LEGEND

BC	BLOWER CONTACTOR
C	CONTACTOR
CM	CONDENSER MOTOR
CMR	CONDENSER MOTOR RELAY
COMP	COMPRESSOR
DC	DEFROST CONTROL
DFT	DEFROST THERMOSTAT
ECON	ECONOMIZER
EBTD	ELECTRONIC BLOWER TIME DELAY
EMR	EVAPORATOR MOTOR RELAY
R	RELAY
EM	EVAPORATOR MOTOR
FC	FAN CAPACITOR
GND	EQUIPMENT GROUND
HPS	HIGH PRESSURE SWITCH
HVDR	HIGH VOLTAGE DEFROST RELAY
LPS	LOW PRESSURE SWITCH
LVDR	LOW VOLTAGE DEFROST RELAY
LVJB	LOW VOLTAGE JUNCTION BOX
PB	POWER DISTRUBTION BLOCK
PLF	FEMALE PLUG / CONNECTOR
RVC	REVERSING VAVLE COIL
RCCF	RUN CAPACITOR FOR COMPRESSOR AND FAN
TB1	TERMINAL BLOCK (24V SIGNAL)
TR	TRANSFORMER

NOTES:

1. REPLACEMENT WIRE MUST BE SAME SIZE AND TYPE INSULATION AS ORIGINAL (AT LEAST 105°C) USE COPPER CONDUCTOR ONLY.
2. USE COPPER CONDUCTORS ONLY
   ++ USE N.E.C. CLASS 2 WIRE
3. ECONOMIZER PLUG LOCATED IN THE RETURN AIR COMPARTMENT, REMOVE MALE PLUG, ATTACH FEMALE PLUG TO THE ECONOMIZER ACCESSORY.
4. FOR 208 VOLT TRANSFORMER OPERATION MOVE BLACK WIRES FROM TERMINAL 3 TO TERMINAL 2 ON TRANSFORMER.

SEE UNIT RATING PLATE FOR TYPE AND SIZE OF OVER CURRENT PROTECTION

208-240-460-575/3/60 0140L00427 REV. B

FACTORY WIRING
- LINE VOLTAGE
- LOW VOLTAGE
- OPTIONAL HIGH VOLTAGE

FIELD WIRING
- HIGH VOLTAGE
- LOW VOLTAGE

WIRE CODE

BK	BLACK
BL	BLUE
BR	BROWN
GR	GREEN
OR	ORANGE
PK	PINK
PU	PURPLE
RD	RED
WH	WHITE
YL	YELLOW
BL/PK	BLUE WITH PINK STRIP
YL/PK	YELLOW WITH PINK STRIP

THERMOSTAT FIELD WIRING ++

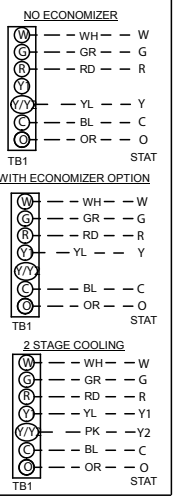

High Voltage: Disconnect all power before servicing or installing this unit. Multiple power sources may be present. Failure to do so may cause property damage, personal injury, or death.

WARNING

Wiring is subject to change. Always refer to the wiring diagram or the unit for the most up-to-date wiring.

WIRING DIAGRAM — CPC060*1D (SINGLE PHASE, DIRECT DRIVE)

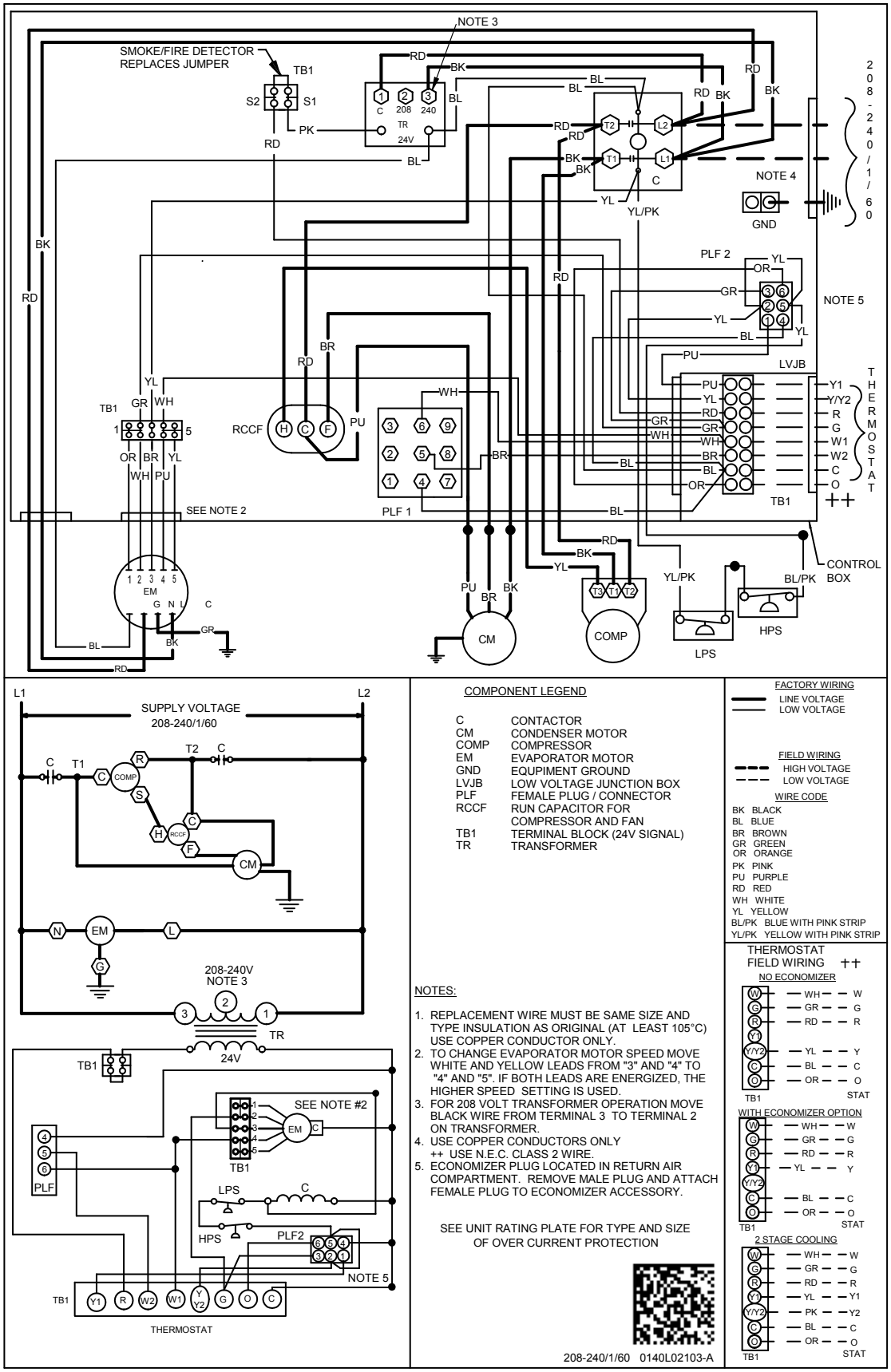

COMPONENT LEGEND

C	CONTACTOR
CM	CONDENSER MOTOR
COMP	COMPRESSOR
EM	EVAPORATOR MOTOR
GND	EQUPIMENT GROUND
LVJB	LOW VOLTAGE JUNCTION BOX
PLF	FEMALE PLUG / CONNECTOR
RCCF	RUN CAPACITOR FOR COMPRESSOR AND FAN
TB1	TERMINAL BLOCK (24V SIGNAL)
TR	TRANSFORMER

NOTES:

1. REPLACEMENT WIRE MUST BE SAME SIZE AND TYPE INSULATION AS ORIGINAL (AT LEAST 105°C) USE COPPER CONDUCTOR ONLY.
2. TO CHANGE EVAPORATOR MOTOR SPEED MOVE WHITE AND YELLOW LEADS FROM "3" AND "4" TO "4" AND "5". IF BOTH LEADS ARE ENERGIZED, THE HIGHER SPEED SETTING IS USED.
3. FOR 208 VOLT TRANSFORMER OPERATION MOVE BLACK WIRE FROM TERMINAL 3 TO TERMINAL 2 ON TRANSFORMER.
4. USE COPPER CONDUCTORS ONLY
   ++ USE N.E.C. CLASS 2 WIRE.
5. ECONOMIZER PLUG LOCATED IN RETURN AIR COMPARTMENT. REMOVE MALE PLUG AND ATTACH FEMALE PLUG TO ECONOMIZER ACCESSORY.

SEE UNIT RATING PLATE FOR TYPE AND SIZE OF OVER CURRENT PROTECTION

208-240/1/60 0140L02103-A

FACTORY WIRING
LINE VOLTAGE
LOW VOLTAGE

FIELD WIRING
HIGH VOLTAGE
LOW VOLTAGE

WIRE CODE

BK	BLACK
BL	BLUE
BR	BROWN
GR	GREEN
OR	ORANGE
PK	PINK
PU	PURPLE
RD	RED
WH	WHITE
YL	YELLOW
BL/PK	BLUE WITH PINK STRIP
YL/PK	YELLOW WITH PINK STRIP

THERMOSTAT FIELD WIRING ++

WARNING

High Voltage: Disconnect all power before servicing or installing this unit. Multiple power sources may be present. Failure to do so may cause property damage, personal injury, or death.

Wiring is subject to change. Always refer to the wiring diagram or the unit for the most up-to-date wiring.

WIRING DIAGRAM — CPC036-72*4B/7B (460V/575v, BELT DRIVE)

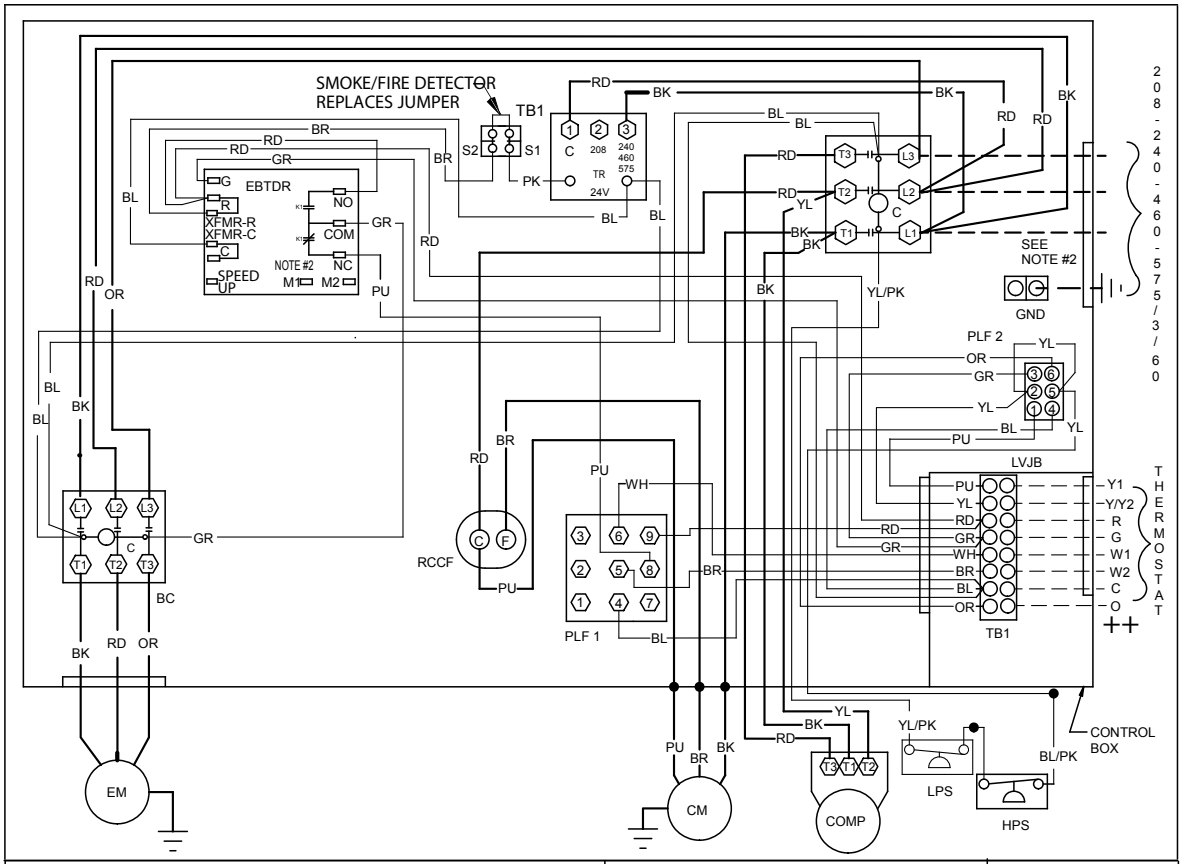

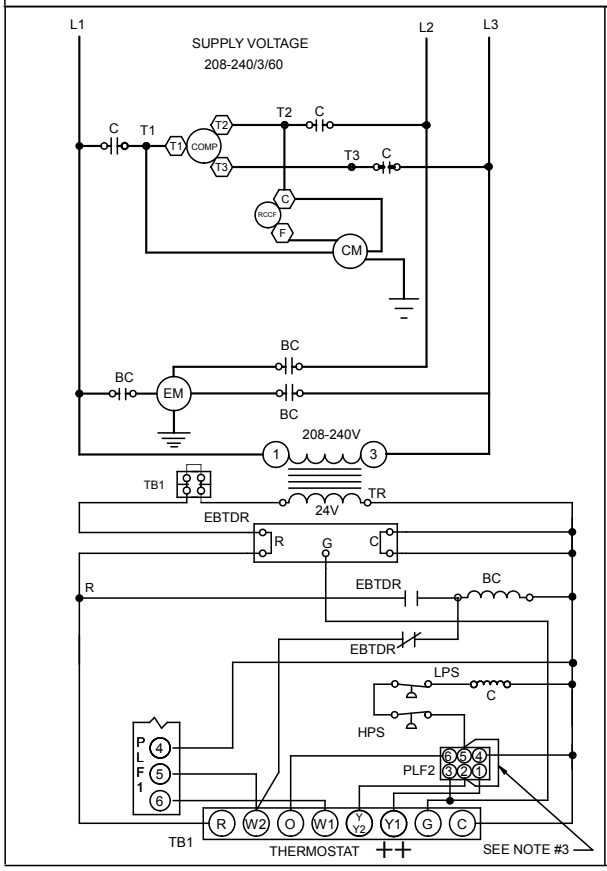

COMPONENT LEGEND

BC	BLOWER CONTACTOR
C	CONTACTOR
CM	CONDENSER MOTOR
CMR	CONDENSER MOTOR RELAY
COMP	COMPRESSOR
DC	DEFROST CONTROL
DFT	DEFROST THERMOSTAT
ECON	ECONOMIZER
EBTD	ELECTRONIC BLOWER TIME DELAY
EMR	EVAPORATOR MOTOR RELAY
R	RELAY
EM	EVAPORATOR MOTOR
FC	FAN CAPACITOR
GND	EQUPIMENT GROUND
HPS	HIGH PRESSURE SWITCH
HVDR	HIGH VOLTAGE DEFROST RELAY
LPS	LOW PRESSURE SWITCH
LVDR	LOW VOLTAGE DEFROST RELAY
LVJB	LOW VOLTAGE JUNCTION BOX
PB	POWER DISTRUBTION BLOCK
PLF	FEMALE PLUG / CONNECTOR
RVC	REVERSING VAVLE COIL
RCCF	RUN CAPACITOR FOR COMPRESSOR AND FAN
TB1	TERMINAL BLOCK (24V SIGNAL)
TR	TRANSFORMER

NOTES:

1. REPLACEMENT WIRE MUST BE SAME SIZE AND TYPE INSULATION AS ORIGINAL (AT LEAST 105°C) USE COPPER CONDUCTOR ONLY.
2. USE COPPER CONDUCTORS ONLY
   ++ USE N.E.C. CLASS 2 WIRE
3. ECONOMIZER PLUG LOCATED IN THE RETURN AIR COMPARTMENT, REMOVE MALE PLUG, ATTACH FEMALE PLUG TO THE ECONOMIZER ACCESSORY.
4. FOR 208 VOLT TRANSFORMER OPERATION MOVE BLACK WIRES FROM TERMINAL (3) TO TERMINAL (2) ON TRANSFORMER.

SEE UNIT RATING PLATE FOR TYPE AND SIZE OF OVER CURRENT PROTECTION

208-240-460-575/3/60 0140L00427 REV. B

FACTORY WIRING
- LINE VOLTAGE
- LOW VOLTAGE
- OPTIONAL HIGH VOLTAGE

FIELD WIRING
- HIGH VOLTAGE
- LOW VOLTAGE

WIRE CODE

BK	BLACK
BL	BLUE
BR	BROWN
GR	GREEN
OR	ORANGE
PK	PINK
PU	PURPLE
RD	RED
WH	WHITE
YL	YELLOW
BL/PK	BLUE WITH PINK STRIP
YL/PK	YELLOW WITH PINK STRIP

THERMOSTAT FIELD WIRING ++

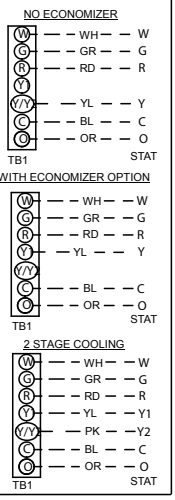

High Voltage: Disconnect all power before servicing or installing this unit. Multiple power sources may be present. Failure to do so may cause property damage, personal injury, or death.

WARNING

Wiring is subject to change. Always refer to the wiring diagram or the unit for the most up-to-date wiring.

WIRING DIAGRAM — CPC060*3D (SINGLE PHASE, DIRECT DRIVE)

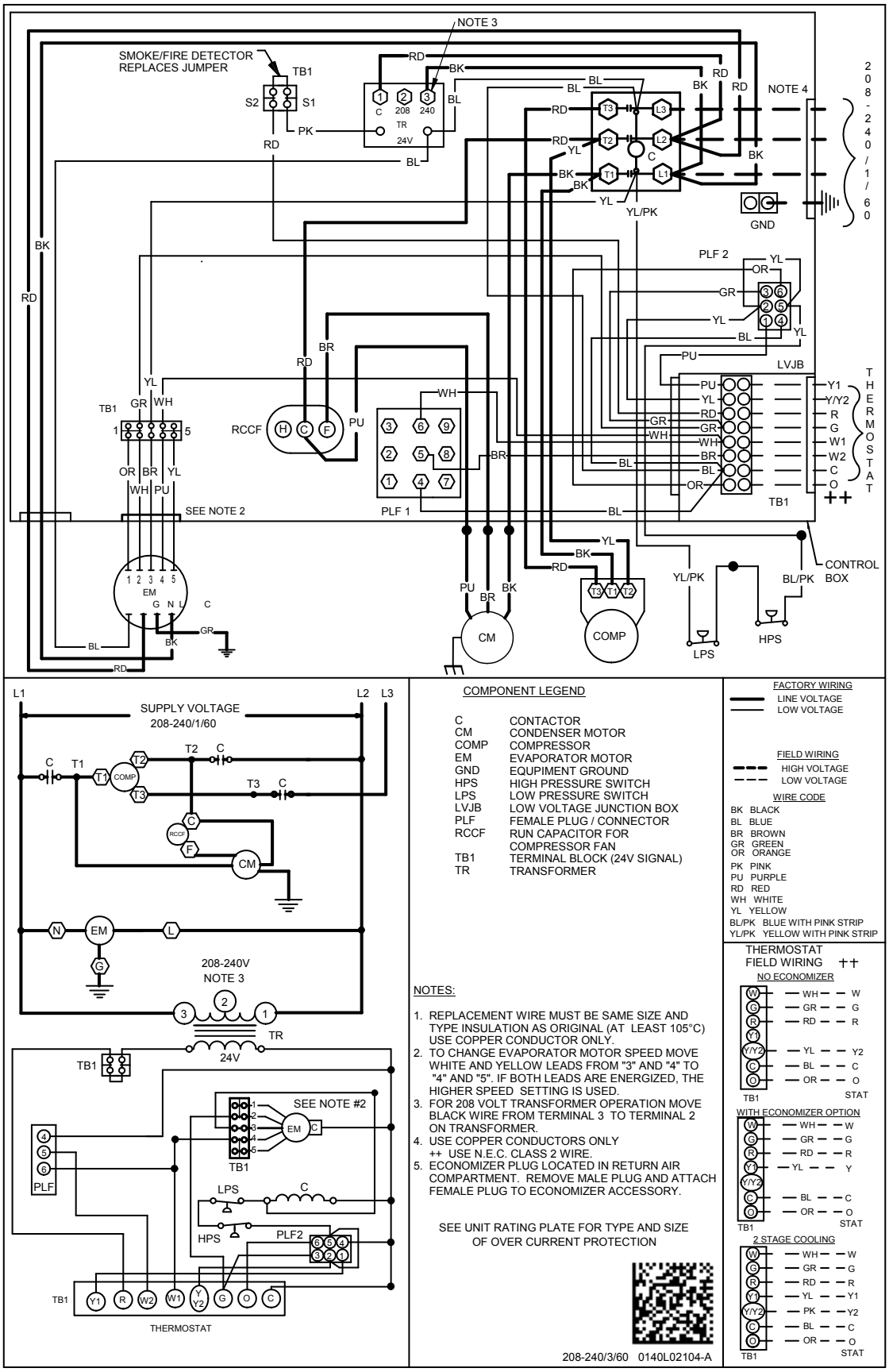

COMPONENT LEGEND

C	CONTACTOR
CM	CONDENSER MOTOR
COMP	COMPRESSOR
EM	EVAPORATOR MOTOR
GND	EQUIPMENT GROUND
HPS	HIGH PRESSURE SWITCH
LPS	LOW PRESSURE SWITCH
LVJB	LOW VOLTAGE JUNCTION BOX
PLF	FEMALE PLUG / CONNECTOR
RCCF	RUN CAPACITOR FOR COMPRESSOR FAN
TB1	TERMINAL BLOCK (24V SIGNAL)
TR	TRANSFORMER

NOTES:

1. REPLACEMENT WIRE MUST BE SAME SIZE AND TYPE INSULATION AS ORIGINAL (AT LEAST 105°C) USE COPPER CONDUCTOR ONLY.
2. TO CHANGE EVAPORATOR MOTOR SPEED MOVE WHITE AND YELLOW LEADS FROM "3" AND "4" TO "4" AND "5". IF BOTH LEADS ARE ENERGIZED, THE HIGHER SPEED SETTING IS USED.
3. FOR 208 VOLT TRANSFORMER OPERATION MOVE BLACK WIRE FROM TERMINAL 3 TO TERMINAL 2 ON TRANSFORMER.
4. USE COPPER CONDUCTORS ONLY ++ USE N.E.C. CLASS 2 WIRE.
5. ECONOMIZER PLUG LOCATED IN RETURN AIR COMPARTMENT. REMOVE MALE PLUG AND ATTACH FEMALE PLUG TO ECONOMIZER ACCESSORY.

SEE UNIT RATING PLATE FOR TYPE AND SIZE OF OVER CURRENT PROTECTION

208-240/3/60 0140L02104-A

FACTORY WIRING
LINE VOLTAGE
LOW VOLTAGE

FIELD WIRING
HIGH VOLTAGE
LOW VOLTAGE

WIRE CODE

BK	BLACK
BL	BLUE
BR	BROWN
GR	GREEN
OR	ORANGE
PK	PINK
PU	PURPLE
RD	RED
WH	WHITE
YL	YELLOW
BL/PK	BLUE WITH PINK STRIP
YL/PK	YELLOW WITH PINK STRIP

THERMOSTAT FIELD WIRING ++

NO ECONOMIZER

TB1	STAT
W	W
G	G
R	R
Y1	Y2
Y/Y2	C
C	O
O	

WITH ECONOMIZER OPTION

TB1	STAT
W	W
G	G
R	R
Y1	Y
Y/Y2	
C	C
O	O

2 STAGE COOLING

TB1	STAT
W	W
G	G
R	R
Y1	Y1
Y/Y2	Y2
C	C
O	O

High Voltage: Disconnect all power before servicing or installing this unit. Multiple power sources may be present. Failure to do so may cause property damage, personal injury, or death.

WARNING

Wiring is subject to change. Always refer to the wiring diagram or the unit for the most up-to-date wiring.

Accessories

Field Accessory Item #	Description	Fits Model Sizes	Field-Installed	Factory-Installed
14CURB3672B	14" Roof Curb	3-6 tons	√	
25FD3672	25% Manual Fresh Air Damper	3-6 tons	√	
25MFD3672	25% Motorized Fresh Air Damper	3-6 tons	√	
DNBBS3672B	Burglar Bar Sleeves Includes Supply & Return	3-6 tons	√	
CDK36	Concentric Duct Kit	3 tons	√	
CDK4872	Concentric Duct Kit	4-6 tons	√	
HAILGD03	Condenser Coil Hail Guard	3-5 tons	√	
HAILGD04	Condenser Coil Hail Guard	6 tons	√	
	Convenience Outlet: Non Powered	All Models		√
	Convenience Outlet: Powered	All Models		√
	Disconnect Switch (non-fused)	All Models		√
DNECONGS3672B	Downflow Economizer	3-6 tons	√	√
DNSQRRND36B	Downflow Square-to-Round Adapter 16" Round	3 tons	√	
DNSQRRND4872B	Downflow Square-to-Round Adapter 18" Round	4-6 tons	√	
	Electric Heat Kits	All Models	√	√
HSKT036B	High-Static Kit (230/460v)	3 tons	√	
HSKT048B	High-Static Kit (230/460v)	4 tons	√	
HSKT060B	High-Static Kit (230/460v)	5 tons	√	
HSKT072B	High-Static Kit (230/460v)	6 tons	√	
BRD3672	Horizontal Barometric Relief Damper	3-6 tons	√	
HZECONGS3672B	Horizontal Economizer	3-6 tons	√	
GHRC-1	Hurricane Restraint Clip	All Models	√	
LAKT01	Low-Ambient Kit	3-6 tons	√	√
PE36722B	Power Exhaust 208/230 Volt	3-6 tons	√	
PE36724B	Power Exhaust 460 Volt	3-6 tons	√	
	Smoke Detector	All Models		√
	Stainless-Steel Heat Exchanger (Type 409)	All Models		√

Goodman Manufacturing Company, L.P., reserves the right to discontinue, or change at any time, specifications or designs without notice or without incurring obligations. © 2013 • Goodman Manufacturing Company, L.P. • Houston, Texas • Printed in the USA.