Heating & Air Conditioning
Amana®
AMERICA'S BRAND FOR COMFORT™

ASX13

Cooling Capacity: 17,800 - 56,500 BTU/h

Energy-Efficient Split System Air Conditioner Up to 14 SEER / 12 EER

Contents

Nomenclature 2
Product Specifications 3
Expanded Cooling Data 4
Dimensions 22
Wiring Diagrams 23
Accessories 25

Standard Features

- Energy-efficient scroll compressor
- High-density foam compressor sound blanket
- Copeland® ComfortAlert™ diagnostics
- Factory-installed filter drier
- Copper tube / enhanced aluminum fin coil
- Sweat connection service valves with easy access to gauge ports
- Contactor with lug connection
- Ground lug connection
- AHRI Certified; ETL Listed

Cabinet Features

- Heavy-gauge, galvanized-steel cabinet with sound control top design
- Attractive Architectural Gray powder-paint finish with 500-hour salt-spray approval
- Wire fan discharge grille
- Steel louver coil guard
- Compact footprint
- Top and side maintenance access
- Single-panel access to controls with space provided for field-installed accessories

10 YEAR PARTS LIMITED WARRANTY*

Intertek

COMPANY WITH QUALITY SYSTEM CERTIFIED BY DNV GL = ISO 9001 =

COMPANY WITH ENVIRONMENTAL SYSTEM CERTIFIED BY DNV GL = ISO 14001 =

* Complete warranty details available from your local dealer or at www.amana-hac.com. To receive the 10-Year Parts Limited Warranty, online registration must be completed within 60 days of installation. Online registration is not required in California or Québec.

Amana® is a trademark of Maytag Corporation or its related companies and used under license to Goodman Company, L.P., Houston, Texas.

A	S	X	13	036	1	AA
1	2	3	4,5	6,7,8	9	10,11

Brand

A Amana® Brand

Product Category

S Split System

N Nominal Split System

Unit Type

X Condenser R-410A

Z Heat Pump R-410A

Efficiency

13	13 SEER	16	16 SEER
14	14 SEER	18	18 SEER

Engineering *

Major/ Minor Revisions

* Not used for order or inventory control

Electrical

1- 208/230 V, 1 Phase, 60 Hz

Nominal Capacity

018	1½ Tons	042	3½ Tons
024	2 Tons	048	4 Tons
030	2½ Tons	060	5 Tons
036	3 Tons		

	ASX13 0181E	ASX13 0241D	ASX13 0301D	ASX13 0361E	ASX13 0421D	ASX13 0481D	ASX13 0601D	ASX13 0611B*
CAPACITIES								
Nominal Cooling (BTU/h)	17,800	23,000	28,400	33,600	40,000	46,000	57,000	56,500
SEER / EER	13 / 11	13 / 11	13 / 11	13 / 11	13 / 11	13 / 11	13 / 11	13 / 11
Decibels	75	75	73	74	75	76	77	77
COMPRESSOR								
RLA	9.0	13.5	12.8	14.1	17.9	19.9	25.0	26.4
LRA	48	58.3	64	77	112	109	134	134
CONDENSER FAN MOTOR								
Horsepower	1/8	1/8	1/8	1/4	1/4	1/4	1/4	1/4
FLA	0.7	0.7	0.7	1.2	1.3	1.3	1.3	1.3
REFRIGERATION SYSTEM								
Refrigerant Line Size								
Liquid Line Size (“O.D.)	⅜"	⅜"	⅜"	⅜"	⅜"	⅜"	⅜"	⅜"
Suction Line Size (“O.D.)	¾"	¾"	¾"	⅞"	1⅛"	1⅛"	1⅛"	⅞"
Refrigerant Connection Size								
Liquid Valve Size (“O.D.)	⅜"	⅜"	⅜"	⅜"	⅜"	⅜"	⅜"	⅜"
Suction Valve Size (“O.D.) [3] [4]	¾"	¾"	¾"	¾" [4]	⅞" [5]	⅞" [5]	⅞" [5]	¾"
Valve Type	Sweat	Sweat	Sweat	Sweat	Sweat	Sweat	Sweat	Sweat
Refrigerant Charge	69	60	60	62	80	91	94	111
Shipped with Orifice Size	0.051	0.057	0.061	0.070	0.076	0.080	0.086	0.086
ELECTRICAL DATA								
Voltage / Phase (60 Hz)	208/230-1	208/230-1	208/230-1	208/230-1	208/230-1	208/230-1	208/230-1	208/230-1
Minimum Circuit Ampacity [1]	12	17.6	16.7	18.8	23.7	26.2	32.6	34.3
Max. Overcurrent Protection [2]	20	30	25	30	40	45	50	60
Min / Max Volts	197/253	197/253	197/253	197/253	197/253	197/253	197/253	197/253
Electrical Conduit Size	½" or ¾"	½" or ¾"	½" or ¾"	½" or ¾"	½" or ¾"	½" or ¾"	½" or ¾"	½" or ¾"
Equipment Weight (lbs)	102	115	115	118	171	175	184	211
Ship Weight (lbs)	117	128	132	135	189	193	202	233

[1] Line sizes denoted for 25’ line sets, tested and rated in accordance with AHRI Standard 210/240. For other line-set lengths or sizes, refer to the installation & Operating instructions and/or the long line-set guidelines.

[2] Wire size should be determined in accordance with National Electrical Codes; extensive wire runs will require larger wire sizes

[3] Must use time-delay fuses or HACR-type circuit breakers of the same size as noted.

[4] Installer will need to supply ¾” to ⅞” adapters for suction line connections.

[5] Installer will need to supply ⅞” to 1⅛” adapters for suction line connections.

NOTES

- Always check the S&R plate for electrical data on the unit being installed.
- Unit is charged with refrigerant for 15’ of ⅜” liquid line. System charge must be adjusted per Installation Instructions Final Charge Procedure.
- This product may not be installed in the Southeast (including Hawaii) or Southwest Regions as of Jan. 1, 2015.

			Outdoor Ambient Temperature																							
			65				75				85				95				105				115			
			Entering Indoor Wet Bulb Temperature																							
IDB	Airflow		59	63	67	71	59	63	67	71	59	63	67	71	59	63	67	71	59	63	67	71	59	63	67	71
70	525	MBh	15.8	16.4	17.9	-	15.4	16.0	17.5	-	15.1	15.6	17.1	-	14.7	15.2	16.7	-	14.0	14.5	15.9	-	12.9	13.4	14.7	-
		S/T	0.67	0.56	0.39	-	0.69	0.58	0.40	-	0.71	0.59	0.41	-	0.73	0.61	0.42	-	0.76	0.63	0.44	-	0.77	0.64	0.44	-
		ΔT	18	16	12	-	19	16	12	-	19	16	12	-	19	16	12	-	19	16	12	-	17	15	11	-
		kW	1.27	1.30	1.34	-	1.36	1.39	1.43	-	1.44	1.47	1.51	-	1.51	1.54	1.59	-	1.57	1.60	1.65	-	1.62	1.65	1.71	-
		Amps	4.6	4.7	4.8	-	4.9	5.0	5.2	-	5.3	5.5	5.6	-	5.7	5.8	6.0	-	6.0	6.2	6.4	-	6.4	6.6	6.8	-
		HI PR	203	218	230	-	228	245	259	-	259	279	294	-	295	317	335	-	332	357	377	-	366	394	416	-
		LO PR	103	109	119	-	109	116	126	-	113	120	131	-	119	126	138	-	124	132	144	-	129	137	149	-
	600	MBh	17.1	17.7	19.4	-	16.7	17.3	19.0	-	16.3	16.9	18.5	-	15.9	16.5	18.1	-	15.1	15.7	17.2	-	14.0	14.5	15.9	-
		S/T	0.69	0.58	0.40	-	0.72	0.60	0.41	-	0.74	0.61	0.43	-	0.76	0.63	0.44	-	0.79	0.66	0.46	-	0.79	0.66	0.46	-
		ΔT	18	16	12	-	18	16	12	-	18	16	12	-	19	16	12	-	18	16	12	-	17	15	11	-
		kW	1.30	1.33	1.37	-	1.39	1.42	1.46	-	1.48	1.51	1.55	-	1.55	1.58	1.63	-	1.61	1.64	1.69	-	1.66	1.70	1.75	-
		Amps	4.7	4.8	5.0	-	5.1	5.2	5.3	-	5.5	5.6	5.8	-	5.9	6.0	6.2	-	6.2	6.4	6.6	-	6.6	6.7	7.0	-
		HI PR	209	225	238	-	235	252	267	-	267	287	303	-	304	327	345	-	342	368	389	-	378	407	429	-
		LO PR	106	113	123	-	112	119	130	-	116	124	135	-	122	130	142	-	128	136	149	-	133	141	154	-
	675	MBh	17.6	18.3	20.0	-	17.2	17.9	19.6	-	16.8	17.4	19.1	-	16.4	17.0	18.6	-	15.6	16.2	17.7	-	14.4	15.0	16.4	-
		S/T	0.73	0.61	0.42	-	0.75	0.63	0.43	-	0.77	0.64	0.45	-	0.80	0.66	0.46	-	0.83	0.69	0.48	-	0.83	0.70	0.48	-
		ΔT	17	15	11	-	18	15	12	-	18	15	12	-	18	15	12	-	18	15	12	-	16	14	11	-
		kW	1.31	1.34	1.38	-	1.40	1.43	1.48	-	1.49	1.52	1.56	-	1.56	1.59	1.64	-	1.62	1.65	1.71	-	1.67	1.71	1.76	-
		Amps	4.7	4.8	5.0	-	5.1	5.2	5.4	-	5.5	5.7	5.8	-	5.9	6.0	6.2	-	6.3	6.4	6.6	-	6.6	6.8	7.0	-
		HI PR	211	227	240	-	237	255	269	-	270	290	306	-	307	330	349	-	345	372	392	-	382	411	434	-
		LO PR	107	114	124	-	113	120	131	-	118	125	137	-	123	131	143	-	129	138	150	-	134	142	155	-
75	525	MBh	16.1	16.5	17.9	19.2	15.7	16.2	17.5	18.8	15.3	15.8	17.1	18.3	15.0	**15.4**	16.7	17.9	14.2	14.6	15.8	17.0	13.2	13.5	14.7	15.7
		S/T	0.76	0.68	0.51	0.33	0.79	0.70	0.53	0.34	0.81	0.72	0.55	0.35	0.83	**0.74**	0.56	0.36	0.86	0.77	0.58	0.38	0.87	0.78	0.59	0.38
		ΔT	21	20	16	11	22	20	16	11	22	20	16	11	22	**20**	16	11	21	20	16	11	20	18	15	10
		kW	1.28	1.31	1.35	1.39	1.37	1.40	1.44	1.49	1.45	1.48	1.53	1.57	1.52	**1.55**	1.60	1.65	1.58	1.62	1.67	1.72	1.63	1.67	1.72	1.77
		Amps	4.6	4.7	4.9	5.0	5.0	5.1	5.2	5.4	5.4	5.5	5.7	5.9	5.7	**5.9**	6.1	6.3	6.1	6.3	6.5	6.7	6.5	6.6	6.8	7.1
		HI PR	205	220	233	243	230	247	261	272	261	281	297	310	298	**320**	338	353	335	361	381	397	370	398	421	439
		LO PR	104	111	121	128	110	117	127	136	114	121	132	141	120	**127**	139	148	126	134	146	155	130	138	151	161
	600	MBh	17.4	17.9	19.4	20.8	17.0	17.5	19.0	20.3	16.6	17.1	18.5	19.9	16.2	**16.7**	18.1	19.4	15.4	15.8	17.2	18.4	14.3	14.7	15.9	17.1
		S/T	0.79	0.70	0.53	0.34	0.81	0.73	0.55	0.35	0.84	0.75	0.57	0.36	0.86	**0.77**	0.58	0.38	0.90	0.80	0.61	0.39	0.90	0.81	0.61	0.39
		ΔT	21	19	16	11	21	20	16	11	21	20	16	11	21	**20**	16	11	21	19	16	11	20	18	15	10
		kW	1.31	1.34	1.38	1.42	1.40	1.43	1.48	1.52	1.49	1.52	1.56	1.61	1.56	**1.59**	1.64	1.69	1.62	1.65	1.71	1.76	1.67	1.71	1.76	1.82
		Amps	4.7	4.8	5.0	5.2	5.1	5.2	5.4	5.6	5.5	5.7	5.8	6.1	5.9	**6.0**	6.2	6.5	6.3	6.4	6.6	6.9	6.6	6.8	7.0	7.3
		HI PR	211	227	240	250	237	255	269	281	270	290	306	319	307	**330**	349	364	345	372	392	409	382	411	434	452
		LO PR	107	114	124	132	113	120	131	140	118	125	137	145	124	**131**	143	153	129	138	150	160	134	142	156	166
	675	MBh	17.9	18.5	20.0	21.5	17.5	18.0	19.5	21.0	17.1	17.6	19.1	20.5	16.7	**17.2**	18.6	20.0	15.9	16.3	17.7	19.0	14.7	15.1	16.4	17.6
		S/T	0.82	0.74	0.56	0.36	0.85	0.76	0.58	0.37	0.88	0.78	0.59	0.38	0.90	**0.81**	0.61	0.39	0.94	0.84	0.64	0.41	0.95	0.85	0.64	0.41
		ΔT	20	19	15	10	20	19	15	11	20	19	15	11	21	**19**	16	11	20	19	15	11	19	17	14	10
		kW	1.32	1.35	1.39	1.43	1.42	1.44	1.49	1.53	1.50	1.53	1.57	1.62	1.57	**1.60**	1.65	1.70	1.63	1.67	1.72	1.77	1.69	1.72	1.78	1.83
		Amps	4.8	4.9	5.0	5.2	5.1	5.3	5.4	5.6	5.6	5.7	5.9	6.1	6.0	**6.1**	6.3	6.5	6.3	6.5	6.7	6.9	6.7	6.9	7.1	7.4
		HI PR	213	230	242	253	239	258	272	284	272	293	309	323	310	**334**	352	368	349	375	396	413	385	415	438	457
		LO PR	108	115	126	134	114	122	133	141	119	126	138	147	125	**133**	145	154	131	139	152	162	135	144	157	167

IDB: Entering Indoor Dry Bulb Temperature

Shaded area reflects ACCA (TVA) conditions

Amps = outdoor unit amps (comp.+fan)

High and low pressures are measured at the liquid and suction service valves.

kW = Total system power

Expanded Cooling Data — ASX130181** (cont.)

			Outdoor Ambient Temperature																							
			65				75				85				95				105				115			
			Entering Indoor Wet Bulb Temperature																							
IDB	Airflow		59	63	67	71	59	63	67	71	59	63	67	71	59	63	67	71	59	63	67	71	59	63	67	71
80	525	MBh	16.4	16.7	17.9	19.1	16.0	16.3	17.4	18.6	15.6	15.9	17.0	18.2	15.2	15.6	16.6	17.8	14.5	14.8	15.8	16.9	13.4	13.7	14.6	15.6
		S/T	0.83	0.78	0.63	0.47	0.86	0.81	0.66	0.49	0.88	0.83	0.67	0.50	0.91	0.86	0.70	0.52	0.95	0.89	0.72	0.54	0.95	0.90	0.73	0.54
		ΔT	24	23	20	16	24	23	20	16	24	23	20	16	24	23	20	16	24	23	20	16	22	21	19	15
		kW	1.29	1.32	1.36	1.40	1.38	1.41	1.45	1.50	1.46	1.49	1.54	1.59	1.53	1.57	1.61	1.66	1.59	1.63	1.68	1.73	1.65	1.68	1.73	1.79
		Amps	4.6	4.8	4.9	5.1	5.0	5.1	5.3	5.5	5.4	5.6	5.7	6.0	5.8	5.9	6.1	6.4	6.2	6.3	6.5	6.8	6.5	6.7	6.9	7.2
		HI PR	207	223	235	245	232	250	264	275	264	284	300	313	301	324	342	357	338	364	385	401	374	402	425	443
		LO PR	105	112	122	130	111	118	129	137	115	123	134	143	121	129	141	150	127	135	147	157	131	140	152	162
	600	MBh	17.7	18.1	19.4	20.7	17.3	17.7	18.9	20.2	16.9	17.3	18.5	19.7	16.5	16.8	**18.0**	19.2	15.7	16.0	17.1	18.3	14.5	14.8	15.8	16.9
		S/T	0.86	0.81	0.66	0.49	0.89	0.84	0.68	0.51	0.92	0.86	0.70	0.52	0.95	0.89	**0.72**	0.54	0.98	0.92	0.75	0.56	0.99	0.93	0.76	0.56
		ΔT	23	22	20	16	24	23	20	16	24	23	20	16	24	23	**20**	16	24	23	20	16	22	21	18	15
		kW	1.32	1.35	1.39	1.43	1.42	1.44	1.49	1.53	1.50	1.53	1.58	1.62	1.57	1.60	**1.65**	1.71	1.63	1.67	1.72	1.77	1.69	1.72	1.78	1.83
		Amps	4.8	4.9	5.0	5.2	5.1	5.3	5.4	5.6	5.6	5.7	5.9	6.1	6.0	6.1	**6.3**	6.5	6.3	6.5	6.7	6.9	6.7	6.9	7.1	7.4
		HI PR	213	230	242	253	239	258	272	284	272	293	309	323	310	334	**352**	368	349	375	396	413	385	415	438	457
		LO PR	108	115	126	134	114	122	133	141	119	126	138	147	125	133	**145**	154	131	139	152	162	135	144	157	167
	675	MBh	18.3	18.7	19.9	21.3	17.8	18.2	19.5	20.8	17.4	17.8	19.0	20.3	17.0	17.4	18.5	19.8	16.1	16.5	17.6	18.8	14.9	15.3	16.3	17.4
		S/T	0.90	0.85	0.69	0.52	0.94	0.88	0.72	0.53	0.96	0.90	0.73	0.55	1.00	0.93	0.76	0.57	1.00	0.97	0.79	0.59	1.00	1.00	0.79	0.59
		ΔT	22	22	19	15	23	22	19	15	23	22	19	15	23	22	19	15	22	22	19	15	20	21	18	14
		kW	1.33	1.36	1.40	1.44	1.43	1.45	1.50	1.54	1.51	1.54	1.59	1.64	1.58	1.62	1.67	1.72	1.65	1.68	1.73	1.79	1.70	1.74	1.79	1.85
		Amps	4.8	4.9	5.1	5.3	5.2	5.3	5.5	5.7	5.6	5.8	6.0	6.2	6.0	6.2	6.4	6.6	6.4	6.5	6.8	7.0	6.8	6.9	7.2	7.4
		HI PR	215	232	245	255	242	260	275	287	275	296	313	326	313	337	356	371	352	379	400	418	389	419	442	461
		LO PR	109	116	127	135	115	123	134	143	120	128	139	148	126	134	146	156	132	140	153	163	137	145	159	169
85	525	MBh	16.6	17.0	17.8	19.0	16.3	16.6	17.4	18.5	15.9	16.2	16.9	18.1	15.5	15.8	16.5	17.6	14.7	15.0	15.7	16.8	13.6	13.9	14.5	15.5
		S/T	0.87	0.84	0.76	0.62	0.90	0.87	0.79	0.64	0.93	0.89	0.81	0.65	0.96	0.92	0.83	0.68	0.99	0.96	0.86	0.70	1.00	0.97	0.87	0.71
		ΔT	25	25	24	20	26	25	24	21	26	25	24	21	26	26	24	21	26	25	24	21	24	23	22	19
		kW	1.30	1.33	1.37	1.41	1.39	1.42	1.46	1.51	1.47	1.50	1.55	1.60	1.55	1.58	1.63	1.68	1.61	1.64	1.69	1.75	1.66	1.69	1.75	1.80
		Amps	4.7	4.8	5.0	5.1	5.1	5.2	5.3	5.5	5.5	5.6	5.8	6.0	5.8	6.0	6.2	6.4	6.2	6.4	6.6	6.8	6.6	6.7	7.0	7.2
		HI PR	209	225	238	248	235	252	267	278	267	287	303	316	304	327	345	360	342	368	388	405	378	406	429	448
		LO PR	106	113	123	131	112	119	130	138	116	124	135	144	122	130	142	151	128	136	149	158	132	141	154	164
	600	MBh	18.0	18.4	19.3	20.5	17.6	18.0	18.8	20.1	17.2	17.5	18.4	19.6	16.8	17.1	17.9	19.1	15.9	16.2	17.0	18.2	14.8	15.0	15.8	16.8
		S/T	0.90	0.87	0.79	0.64	0.94	0.90	0.82	0.66	0.96	0.93	0.84	0.68	0.99	0.96	0.86	0.70	1.00	0.99	0.90	0.73	1.00	1.00	0.90	0.73
		ΔT	25	25	23	20	25	25	24	20	25	25	24	20	25	25	24	21	24	25	23	20	23	23	22	19
		kW	1.33	1.36	1.40	1.44	1.43	1.45	1.50	1.54	1.51	1.54	1.59	1.64	1.58	1.62	1.67	1.72	1.65	1.68	1.73	1.79	1.70	1.74	1.79	1.85
		Amps	4.8	4.9	5.1	5.3	5.2	5.3	5.5	5.7	5.6	5.8	6.0	6.2	6.0	6.2	6.4	6.6	6.4	6.5	6.8	7.0	6.8	6.9	7.2	7.4
		HI PR	215	232	245	255	242	260	275	287	275	296	313	326	313	337	356	371	352	379	400	418	389	419	442	461
		LO PR	109	116	127	135	115	123	134	143	120	128	139	148	126	134	146	156	132	140	153	163	137	145	159	169
	675	MBh	18.6	18.9	19.8	21.2	18.1	18.5	19.4	20.7	17.7	18.1	18.9	20.2	17.3	17.6	18.4	19.7	16.4	16.7	17.5	18.7	15.2	15.5	16.2	17.3
		S/T	0.95	0.91	0.83	0.67	0.98	0.95	0.86	0.69	1.00	0.97	0.88	0.71	1.00	1.00	0.91	0.73	1.00	1.00	0.94	0.76	1.00	1.00	0.95	0.77
		ΔT	24	24	22	19	24	24	23	20	24	24	23	20	24	24	23	20	22	23	22	19	21	21	21	18
		kW	1.34	1.37	1.41	1.45	1.44	1.47	1.51	1.56	1.52	1.55	1.60	1.65	1.60	1.63	1.68	1.73	1.66	1.69	1.75	1.80	1.71	1.75	1.81	1.86
		Amps	4.9	5.0	5.1	5.3	5.2	5.4	5.5	5.7	5.7	5.8	6.0	6.2	6.1	6.2	6.4	6.7	6.4	6.6	6.8	7.1	6.8	7.0	7.2	7.5
		HI PR	218	234	247	258	244	263	278	289	278	299	316	329	316	340	359	375	356	383	404	422	393	423	447	466
		LO PR	110	117	128	136	117	124	135	144	121	129	141	150	127	135	148	157	133	142	155	165	138	147	160	171

IDB: Entering Indoor Dry Bulb Temperature

High and low pressures are measured at the liquid and suction service valves.

Shaded area reflects AHRI conditions

Amps = outdoor unit amps (comp.+fan)

kW = Total system power

Expanded Cooling Data — ASX130241**

			Outdoor Ambient Temperature																							
			65				75				85				95				105				115			
			Entering Indoor Wet Bulb Temperature																							
IDB	Airflow		59	63	67	71	59	63	67	71	59	63	67	71	59	63	67	71	59	63	67	71	59	63	67	71
70	700	MBh	21.1	21.8	23.9	-	20.6	21.3	23.4	-	20.1	20.8	22.8	-	19.6	20.3	22.3	-	18.6	19.3	21.1	-	17.3	17.9	19.6	-
		S/T	0.67	0.56	0.39	-	0.70	0.58	0.40	-	0.72	0.60	0.41	-	0.74	0.62	0.43	-	0.77	0.64	0.44	-	0.77	0.65	0.45	-
		ΔT	19	16	12	-	19	16	12	-	19	16	12	-	19	16	13	-	19	16	12	-	18	15	12	-
		kW	1.68	1.70	1.74	-	1.77	1.79	1.83	-	1.84	1.87	1.92	-	1.91	1.94	1.99	-	1.97	2.01	2.05	-	2.02	2.06	2.11	-
		Amps	5.7	5.8	6.0	-	6.1	6.3	6.5	-	6.7	6.8	7.1	-	7.1	7.3	7.5	-	7.6	7.8	8.0	-	8.0	8.2	8.5	-
		HI PR	209	225	237	-	234	252	266	-	267	287	303	-	304	327	345	-	342	368	388	-	377	406	429	-
		LO PR	100	107	116	-	106	113	123	-	110	117	128	-	116	123	134	-	121	129	141	-	125	133	146	-
	800	MBh	22.8	23.7	25.9	-	22.3	23.1	25.3	-	21.8	22.6	24.7	-	21.2	22.0	24.1	-	20.2	20.9	22.9	-	18.7	19.4	21.2	-
		S/T	0.70	0.58	0.40	-	0.72	0.61	0.42	-	0.74	0.62	0.43	-	0.77	0.64	0.44	-	0.80	0.66	0.46	-	0.80	0.67	0.46	-
		ΔT	18	16	12	-	19	16	12	-	19	16	12	-	19	16	12	-	18	16	12	-	17	15	11	-
		kW	1.71	1.73	1.77	-	1.80	1.82	1.87	-	1.88	1.91	1.95	-	1.95	1.98	2.03	-	2.01	2.04	2.09	-	2.06	2.10	2.15	-
		Amps	5.8	6.0	6.2	-	6.3	6.5	6.7	-	6.9	7.0	7.3	-	7.3	7.5	7.8	-	7.8	8.0	8.3	-	8.3	8.5	8.7	-
		HI PR	215	232	245	-	242	260	275	-	275	296	312	-	313	337	356	-	352	379	400	-	389	419	442	-
		LO PR	103	110	120	-	109	116	127	-	114	121	132	-	119	127	138	-	125	133	145	-	129	137	150	-
	900	MBh	23.5	24.4	26.7	-	23.0	23.8	26.1	-	22.4	23.2	25.5	-	21.9	22.7	24.8	-	20.8	21.5	23.6	-	19.3	20.0	21.9	-
		S/T	0.73	0.61	0.42	-	0.76	0.63	0.44	-	0.78	0.65	0.45	-	0.80	0.67	0.47	-	0.83	0.70	0.48	-	0.84	0.70	0.49	-
		ΔT	18	15	12	-	18	15	12	-	18	15	12	-	18	16	12	-	18	15	12	-	17	14	11	-
		kW	1.71	1.74	1.78	-	1.81	1.84	1.88	-	1.89	1.92	1.97	-	1.96	1.99	2.04	-	2.02	2.06	2.11	-	2.08	2.11	2.16	-
		Amps	5.9	6.0	6.2	-	6.4	6.5	6.7	-	6.9	7.1	7.3	-	7.4	7.6	7.8	-	7.9	8.1	8.3	-	8.3	8.5	8.8	-
		HI PR	217	234	247	-	244	263	277	-	278	299	315	-	316	340	359	-	356	383	404	-	393	423	446	-
		LO PR	104	111	121	-	110	117	128	-	115	122	133	-	120	128	140	-	126	134	147	-	131	139	152	-
75	700	MBh	21.4	22.1	23.9	25.6	20.9	21.6	23.3	25.0	20.4	21.0	22.8	24.4	19.9	**20.5**	22.2	23.8	18.9	19.5	21.1	22.7	17.5	18.1	19.6	21.0
		S/T	0.77	0.69	0.52	0.33	0.79	0.71	0.54	0.35	0.81	0.73	0.55	0.35	0.84	**0.75**	0.57	0.37	0.87	0.78	0.59	0.38	0.88	0.79	0.60	0.38
		ΔT	22	20	16	11	22	20	16	11	22	20	16	11	22	**20**	17	11	22	20	16	11	20	19	15	11
		kW	1.69	1.71	1.75	1.79	1.78	1.80	1.84	1.89	1.86	1.88	1.93	1.98	1.93	**1.96**	2.00	2.05	1.99	2.02	2.07	2.12	2.04	2.07	2.12	2.18
		Amps	5.7	5.9	6.1	6.3	6.2	6.3	6.6	6.8	6.7	6.9	7.1	7.4	7.2	**7.4**	7.6	7.9	7.7	7.8	8.1	8.4	8.1	8.3	8.6	8.9
		HI PR	211	227	240	250	237	255	269	281	269	290	306	319	307	**330**	348	363	345	371	392	409	381	410	433	452
		LO PR	101	108	118	125	107	114	124	132	111	118	129	138	117	**124**	136	145	122	130	142	151	127	135	147	157
	800	MBh	23.2	23.9	25.9	27.8	22.7	23.4	25.3	27.1	22.1	22.8	24.7	26.5	21.6	**22.2**	24.1	25.8	20.5	21.1	22.9	24.5	19.0	19.6	21.2	22.7
		S/T	0.79	0.71	0.54	0.35	0.82	0.74	0.56	0.36	0.84	0.76	0.57	0.37	0.87	**0.78**	0.59	0.38	0.90	0.81	0.61	0.39	0.91	0.82	0.62	0.40
		ΔT	21	20	16	11	21	20	16	11	21	20	16	11	22	**20**	16	11	21	20	16	11	20	18	15	10
		kW	1.71	1.74	1.78	1.82	1.81	1.84	1.88	1.92	1.89	1.92	1.97	2.01	1.96	**1.99**	2.04	2.09	2.02	2.06	2.11	2.16	2.08	2.11	2.17	2.22
		Amps	5.9	6.0	6.2	6.5	6.4	6.5	6.7	7.0	6.9	7.1	7.3	7.6	7.4	**7.6**	7.8	8.1	7.9	8.1	8.3	8.6	8.3	8.5	8.8	9.2
		HI PR	218	234	247	258	244	263	277	289	278	299	315	329	316	**340**	359	375	356	383	404	422	393	423	447	466
		LO PR	104	111	121	129	110	117	128	136	115	122	133	142	120	**128**	140	149	126	134	147	156	131	139	152	161
	900	MBh	23.9	24.6	26.7	28.6	23.4	24.1	26.0	27.9	22.8	23.5	25.4	27.3	22.2	**22.9**	24.8	26.6	21.1	21.8	23.6	25.3	19.6	20.2	21.8	23.4
		S/T	0.83	0.75	0.56	0.36	0.86	0.77	0.58	0.38	0.89	0.79	0.60	0.39	0.91	**0.82**	0.62	0.40	0.95	0.85	0.64	0.41	0.96	0.86	0.65	0.42
		ΔT	20	19	15	11	21	19	16	11	21	19	16	11	21	**19**	16	11	20	19	15	11	19	18	14	10
		kW	1.72	1.75	1.79	1.83	1.82	1.85	1.89	1.93	1.90	1.93	1.98	2.03	1.97	**2.01**	2.06	2.11	2.04	2.07	2.12	2.18	2.09	2.13	2.18	2.24
		Amps	5.9	6.1	6.3	6.5	6.4	6.6	6.8	7.1	7.0	7.2	7.4	7.7	7.5	**7.6**	7.9	8.2	7.9	8.1	8.4	8.7	8.4	8.6	8.9	9.3
		HI PR	220	236	250	260	247	265	280	292	280	302	319	332	319	**344**	363	378	359	387	408	426	397	427	451	470
		LO PR	105	112	122	130	111	119	129	138	116	123	135	143	122	**129**	141	150	127	136	148	158	132	140	153	163

IDB: Entering Indoor Dry Bulb Temperature

Shaded area reflects ACCA (TVA) conditions

Amps = outdoor unit amps (comp.+fan)

High and low pressures are measured at the liquid and suction service valves.

kW = Total system power

Expanded Cooling Data — ASX130241** (cont.)

			Outdoor Ambient Temperature																							
			65				75				85				95				105				115			
			Entering Indoor Wet Bulb Temperature																							
IDB	Airflow		59	63	67	71	59	63	67	71	59	63	67	71	59	63	67	71	59	63	67	71	59	63	67	71
80	700	MBh	21.8	22.3	23.8	25.5	21.3	21.8	23.3	24.9	20.8	21.3	22.7	24.3	20.3	20.7	22.2	23.7	19.3	19.7	21.0	22.5	17.9	18.2	19.5	20.8
		S/T	0.84	0.79	0.64	0.48	0.87	0.82	0.67	0.50	0.89	0.84	0.68	0.51	0.92	0.86	0.70	0.53	0.96	0.90	0.73	0.55	0.97	0.91	0.74	0.55
		ΔT	24	23	20	16	24	23	20	16	24	23	20	16	25	24	20	16	24	23	20	16	23	22	19	15
		kW	1.70	1.72	1.76	1.80	1.79	1.81	1.86	1.90	1.87	1.90	1.94	1.99	1.94	1.97	2.02	2.07	2.00	2.03	2.08	2.13	2.05	2.08	2.14	2.19
		Amps	5.8	5.9	6.1	6.3	6.3	6.4	6.6	6.9	6.8	7.0	7.2	7.5	7.3	7.4	7.7	8.0	7.7	7.9	8.2	8.5	8.2	8.4	8.7	9.0
		HI PR	213	229	242	253	239	257	272	283	272	293	309	322	310	333	352	367	348	375	396	413	385	414	438	456
		LO PR	102	109	119	127	108	115	126	134	112	120	130	139	118	126	137	146	124	132	144	153	128	136	149	158
	800	MBh	23.6	24.1	25.8	27.6	23.1	23.6	25.2	26.9	22.5	23.0	24.6	26.3	22.0	22.5	**24.0**	25.7	20.9	21.3	22.8	24.4	19.3	19.8	21.1	22.6
		S/T	0.87	0.82	0.67	0.50	0.90	0.85	0.69	0.52	0.93	0.87	0.71	0.53	0.96	0.90	**0.73**	0.55	0.99	0.93	0.76	0.57	1.00	0.94	0.76	0.57
		ΔT	24	23	20	16	24	23	20	16	24	23	20	16	24	23	**20**	16	24	23	20	16	22	21	19	15
		kW	1.72	1.75	1.79	1.83	1.82	1.85	1.89	1.93	1.90	1.93	1.98	2.03	1.97	2.01	**2.06**	2.11	2.04	2.07	2.12	2.18	2.09	2.13	2.18	2.24
		Amps	5.9	6.1	6.3	6.5	6.4	6.6	6.8	7.1	7.0	7.2	7.4	7.7	7.5	7.6	**7.9**	8.2	7.9	8.1	8.4	8.7	8.4	8.6	8.9	9.3
		HI PR	220	236	250	260	247	265	280	292	280	302	319	332	319	344	**363**	379	359	387	408	426	397	427	451	470
		LO PR	105	112	123	130	111	119	129	138	116	123	135	143	122	129	**141**	150	127	136	148	158	132	140	153	163
	900	MBh	24.3	24.9	26.6	28.4	23.8	24.3	26.0	27.7	23.2	23.7	25.3	27.1	22.6	23.1	24.7	26.4	21.5	22.0	23.5	25.1	19.9	20.4	21.8	23.3
		S/T	0.91	0.86	0.70	0.52	0.95	0.89	0.72	0.54	1.00	0.91	0.74	0.55	1.00	0.94	0.77	0.57	1.00	1.00	0.79	0.59	1.00	1.00	0.80	0.60
		ΔT	23	22	19	15	23	22	19	15	24	22	19	15	23	22	19	15	22	22	19	15	20	21	18	14
		kW	1.73	1.76	1.80	1.84	1.83	1.86	1.90	1.95	1.91	1.94	1.99	2.04	1.99	2.02	2.07	2.12	2.05	2.08	2.14	2.19	2.10	2.14	2.19	2.25
		Amps	6.0	6.1	6.3	6.6	6.5	6.6	6.9	7.1	7.0	7.2	7.5	7.7	7.5	7.7	8.0	8.3	8.0	8.2	8.5	8.8	8.5	8.7	9.0	9.3
		HI PR	222	239	252	263	249	268	283	295	283	305	322	336	323	347	367	382	363	390	412	430	401	431	456	475
		LO PR	107	113	124	132	113	120	131	139	117	124	136	145	123	131	143	152	129	137	150	159	133	142	155	165
85	700	MBh	22.2	22.6	23.7	25.3	21.7	22.1	23.1	24.7	21.2	21.6	22.6	24.1	20.6	21.0	22.0	23.5	19.6	20.0	20.9	22.3	18.2	18.5	19.4	20.7
		S/T	0.88	0.85	0.77	0.62	0.91	0.88	0.80	0.65	0.94	0.90	0.82	0.66	0.97	0.93	0.84	0.68	1.00	0.97	0.87	0.71	1.00	0.98	0.88	0.71
		ΔT	26	25	24	21	26	26	24	21	26	26	24	21	26	26	24	21	26	25	24	21	24	24	22	19
		kW	1.70	1.73	1.77	1.81	1.80	1.82	1.87	1.91	1.88	1.91	1.95	2.00	1.95	1.98	2.03	2.08	2.01	2.04	2.09	2.15	2.06	2.10	2.15	2.21
		Amps	5.8	6.0	6.2	6.4	6.3	6.5	6.7	6.9	6.9	7.0	7.3	7.5	7.3	7.5	7.8	8.0	7.8	8.0	8.3	8.6	8.3	8.5	8.7	9.1
		HI PR	215	232	245	255	242	260	274	286	275	296	312	326	313	337	356	371	352	379	400	417	389	419	442	461
		LO PR	103	110	120	128	109	116	127	135	113	121	132	140	119	127	138	147	125	133	145	155	129	137	150	160
	800	MBh	24.0	24.5	25.7	27.4	23.5	23.9	25.1	26.8	22.9	23.4	24.5	26.1	22.4	22.8	23.9	25.5	21.2	21.7	22.7	24.2	19.7	20.1	21.0	22.4
		S/T	0.91	0.88	0.80	0.65	0.95	0.91	0.82	0.67	0.97	0.94	0.85	0.69	1.00	0.97	0.87	0.71	1.00	1.00	0.91	0.74	1.00	1.00	0.91	0.74
		ΔT	25	25	23	20	26	25	24	21	26	25	24	21	26	25	24	21	24	25	24	20	23	23	22	19
		kW	1.73	1.76	1.80	1.84	1.83	1.86	1.90	1.95	1.91	1.94	1.99	2.04	1.99	2.02	2.07	2.12	2.05	2.08	2.14	2.19	2.10	2.14	2.19	2.25
		Amps	6.0	6.1	6.3	6.6	6.5	6.6	6.9	7.1	7.0	7.2	7.5	7.7	7.5	7.7	8.0	8.3	8.0	8.2	8.5	8.8	8.5	8.7	9.0	9.3
		HI PR	222	239	252	263	249	268	283	295	283	305	322	336	323	347	367	382	363	390	412	430	401	431	456	475
		LO PR	107	113	124	132	113	120	131	139	117	124	136	145	123	131	143	152	129	137	150	159	133	142	155	165
	900	MBh	24.8	25.2	26.4	28.2	24.2	24.7	25.8	27.6	23.6	24.1	25.2	26.9	23.0	23.5	24.6	26.2	21.9	22.3	23.4	24.9	20.3	20.7	21.6	23.1
		S/T	0.96	0.92	0.83	0.68	0.99	0.96	0.86	0.70	1.00	0.98	0.89	0.72	1.00	1.00	0.92	0.74	1.00	1.00	0.95	0.77	1.00	1.00	0.96	0.78
		ΔT	24	24	23	20	25	24	23	20	24	24	23	20	24	24	23	20	22	23	23	20	21	21	21	18
		kW	1.74	1.77	1.81	1.85	1.84	1.87	1.91	1.96	1.92	1.96	2.00	2.05	2.00	2.03	2.08	2.14	2.06	2.10	2.15	2.21	2.12	2.15	2.21	2.27
		Amps	6.1	6.2	6.4	6.6	6.5	6.7	6.9	7.2	7.1	7.3	7.5	7.8	7.6	7.8	8.0	8.4	8.1	8.3	8.6	8.9	8.6	8.8	9.1	9.4
		HI PR	224	241	255	266	251	271	286	298	286	308	325	339	326	351	370	386	366	394	416	434	405	436	460	480
		LO PR	108	114	125	133	114	121	132	141	118	126	137	146	124	132	144	154	130	138	151	161	135	143	156	166

IDB: Entering Indoor Dry Bulb Temperature

Shaded area reflects AHRI conditions

Amps = outdoor unit amps (comp.+fan)

High and low pressures are measured at the liquid and suction service valves.

kW = Total system power

			Outdoor Ambient Temperature																							
			65				75				85				95				105				115			
			Entering Indoor Wet Bulb Temperature																							
IDB	Airflow		59	63	67	71	59	63	67	71	59	63	67	71	59	63	67	71	59	63	67	71	59	63	67	71
70	1181	MBh	24.9	25.8	28.3	-	24.4	25.2	27.7	-	23.8	24.6	27.0	-	23.2	24.0	26.3	-	22.0	22.8	25.0	-	20.4	21.2	23.2	-
		S/T	0.69	0.58	0.40	-	0.72	0.60	0.42	-	0.74	0.61	0.43	-	0.76	0.63	0.44	-	0.79	0.66	0.46	-	0.80	0.66	0.46	-
		ΔT	18	16	12	-	18	16	12	-	18	16	12	-	19	16	12	-	18	16	12	-	17	15	11	-
		kW	1.94	1.98	2.03	-	2.08	2.12	2.18	-	2.20	2.25	2.32	-	2.31	2.36	2.43	-	2.40	2.45	2.53	-	2.48	2.54	2.62	-
		Amps	6.8	7.0	7.2	-	7.4	7.6	7.8	-	8.0	8.2	8.5	-	8.6	8.8	9.1	-	9.1	9.3	9.7	-	9.7	9.9	10.2	-
		HI PR	228	245	259	-	256	275	291	-	291	313	331	-	332	357	377	-	373	401	424	-	412	443	468	-
		LO PR	102	109	119	-	108	115	125	-	112	119	130	-	118	125	137	-	124	131	143	-	128	136	148	-
	1050	MBh	27.0	28.0	30.7	-	26.4	27.4	30.0	-	25.8	26.7	29.3	-	25.1	26.1	28.5	-	23.9	24.7	27.1	-	22.1	22.9	25.1	-
		S/T	0.72	0.60	0.42	-	0.74	0.62	0.43	-	0.76	0.64	0.44	-	0.79	0.66	0.46	-	0.82	0.68	0.47	-	0.82	0.69	0.48	-
		ΔT	18	15	12	-	18	16	12	-	18	16	12	-	18	16	12	-	18	16	12	-	17	15	11	-
		kW	1.98	2.02	2.08	-	2.13	2.17	2.24	-	2.25	2.30	2.37	-	2.37	2.42	2.49	-	2.46	2.51	2.59	-	2.54	2.60	2.68	-
		Amps	7.0	7.2	7.4	-	7.6	7.8	8.0	-	8.2	8.4	8.7	-	8.8	9.0	9.3	-	9.4	9.6	9.9	-	9.9	10.2	10.5	-
		HI PR	235	253	267	-	264	284	300	-	300	323	341	-	342	368	388	-	384	414	437	-	425	457	483	-
		LO PR	105	112	122	-	111	118	129	-	116	123	134	-	122	129	141	-	127	135	148	-	132	140	153	-
	919	MBh	27.8	28.8	31.6	-	27.2	28.2	30.9	-	26.5	27.5	30.1	-	25.9	26.8	29.4	-	24.6	25.5	27.9	-	22.8	23.6	25.9	-
		S/T	0.75	0.63	0.44	-	0.78	0.65	0.45	-	0.80	0.67	0.46	-	0.83	0.69	0.48	-	0.86	0.72	0.50	-	0.86	0.72	0.50	-
		ΔT	17	15	11	-	17	15	11	-	17	15	11	-	17	15	11	-	17	15	11	-	16	14	11	-
		kW	2.00	2.04	2.10	-	2.14	2.19	2.25	-	2.27	2.32	2.39	-	2.39	2.44	2.51	-	2.48	2.53	2.62	-	2.56	2.62	2.70	-
		Amps	7.1	7.2	7.5	-	7.7	7.8	8.1	-	8.3	8.5	8.8	-	8.9	9.1	9.4	-	9.5	9.7	10.0	-	10.0	10.3	10.6	-
		HI PR	237	256	270	-	266	287	303	-	303	326	344	-	345	371	392	-	388	418	441	-	429	462	488	-
		LO PR	106	113	124	-	112	120	131	-	117	124	136	-	123	131	143	-	129	137	149	-	133	142	155	-
75	1181	MBh	25.4	26.1	28.3	30.3	24.8	25.5	27.6	29.6	24.2	24.9	26.9	28.9	23.6	**24.3**	26.3	28.2	22.4	23.1	25.0	26.8	20.8	21.4	23.1	24.8
		S/T	0.79	0.70	0.53	0.34	0.82	0.73	0.55	0.36	0.84	0.75	0.57	0.36	0.86	**0.77**	0.58	0.38	0.90	0.80	0.61	0.39	0.90	0.81	0.61	0.39
		ΔT	21	19	16	11	21	20	16	11	21	20	16	11	21	**20**	16	11	21	19	16	11	20	18	15	10
		kW	1.95	1.99	2.05	2.11	2.09	2.14	2.20	2.27	2.22	2.26	2.33	2.41	2.33	**2.38**	2.45	2.53	2.42	2.47	2.55	2.63	2.50	2.56	2.64	2.72
		Amps	6.9	7.1	7.3	7.6	7.4	7.6	7.9	8.2	8.1	8.3	8.6	8.9	8.6	**8.9**	9.2	9.5	9.2	9.4	9.7	10.1	9.7	10.0	10.3	10.7
		HI PR	230	248	262	273	259	278	294	306	294	316	334	349	335	**360**	381	397	377	405	428	447	416	448	473	493
		LO PR	103	110	120	128	109	116	127	135	113	121	132	140	119	**127**	138	147	125	133	145	154	129	137	150	160
	1050	MBh	27.5	28.3	30.6	32.9	26.8	27.6	29.9	32.1	26.2	27.0	29.2	31.3	25.6	**26.3**	28.5	30.6	24.3	25.0	27.1	29.0	22.5	23.2	25.1	26.9
		S/T	0.82	0.73	0.55	0.36	0.85	0.76	0.57	0.37	0.87	0.78	0.59	0.38	0.90	**0.80**	0.61	0.39	0.93	0.83	0.63	0.40	0.94	0.84	0.63	0.41
		ΔT	21	19	16	11	21	19	16	11	21	19	16	11	21	**19**	16	11	21	19	16	11	19	18	15	10
		kW	2.00	2.04	2.10	2.16	2.14	2.19	2.25	2.32	2.27	2.32	2.39	2.47	2.39	**2.44**	2.51	2.59	2.48	2.53	2.62	2.70	2.57	2.62	2.70	2.79
		Amps	7.1	7.2	7.5	7.8	7.7	7.8	8.1	8.4	8.3	8.5	8.8	9.1	8.9	**9.1**	9.4	9.8	9.5	9.7	10.0	10.4	10.0	10.3	10.6	11.0
		HI PR	238	256	270	282	267	287	303	316	303	326	344	359	345	**372**	392	409	388	418	441	460	429	462	488	509
		LO PR	106	113	124	132	112	120	131	139	117	124	136	145	123	**131**	143	152	129	137	149	159	133	142	155	165
	919	MBh	28.3	29.1	31.5	33.9	27.6	28.5	30.8	33.1	27.0	27.8	30.1	32.3	26.3	**27.1**	29.3	31.5	25.0	25.8	27.9	29.9	23.2	23.9	25.8	27.7
		S/T	0.86	0.77	0.58	0.37	0.89	0.79	0.60	0.39	0.91	0.81	0.62	0.40	0.94	**0.84**	0.64	0.41	0.97	0.87	0.66	0.42	0.98	0.88	0.67	0.43
		ΔT	20	18	15	10	20	18	15	10	20	18	15	10	20	**19**	15	11	20	18	15	10	19	17	14	10
		kW	2.01	2.05	2.11	2.18	2.16	2.20	2.27	2.34	2.29	2.34	2.41	2.49	2.40	**2.46**	2.53	2.61	2.50	2.56	2.64	2.72	2.59	2.64	2.73	2.82
		Amps	7.1	7.3	7.6	7.8	7.7	7.9	8.2	8.5	8.4	8.6	8.9	9.2	9.0	**9.2**	9.5	9.9	9.6	9.8	10.1	10.5	10.1	10.4	10.7	11.1
		HI PR	240	258	273	284	269	290	306	319	306	329	348	363	349	**375**	396	413	392	422	446	465	433	466	493	514
		LO PR	107	114	125	133	114	121	132	140	118	126	137	146	124	**132**	144	153	130	138	151	161	134	143	156	166

IDB: Entering Indoor Dry Bulb Temperature

Shaded area reflects ACCA (TVA) conditions

Amps = outdoor unit amps (comp.+fan)

High and low pressures are measured at the liquid and suction service valves.

kW = Total system power

Expanded Expanded Cooling Data — ASX130301** (cont.)

			Outdoor Ambient Temperature																							
			65				75				85				95				105				115			
			Entering Indoor Wet Bulb Temperature																							
IDB	Airflow		59	63	67	71	59	63	67	71	59	63	67	71	59	63	67	71	59	63	67	71	59	63	67	71
80	1181	MBh	25.8	26.4	28.2	30.1	25.2	25.8	27.5	29.4	24.6	25.1	26.9	28.7	24.0	24.5	26.2	28.0	22.8	23.3	24.9	26.6	21.1	21.6	23.1	24.7
		S/T	0.86	0.81	0.66	0.49	0.90	0.84	0.68	0.51	0.92	0.86	0.70	0.52	0.95	0.89	0.72	0.54	0.98	0.92	0.75	0.56	0.99	0.93	0.76	0.57
		ΔT	23	22	20	16	24	23	20	16	24	23	20	16	24	23	20	16	24	23	20	16	22	21	18	15
		kW	1.97	2.01	2.07	2.13	2.11	2.15	2.22	2.29	2.24	2.28	2.35	2.43	2.35	2.40	2.47	2.55	2.44	2.49	2.57	2.66	2.52	2.58	2.66	2.75
		Amps	7.0	7.1	7.3	7.6	7.5	7.7	7.9	8.2	8.2	8.4	8.6	9.0	8.7	8.9	9.2	9.6	9.3	9.5	9.8	10.2	9.8	10.1	10.4	10.8
		HI PR	233	250	264	276	261	281	297	310	297	320	338	352	338	364	384	401	381	410	432	451	420	452	478	498
		LO PR	104	111	121	129	110	117	128	136	114	122	133	142	120	128	140	149	126	134	146	156	130	139	151	161
	1050	MBh	28.0	28.6	30.5	32.6	27.3	27.9	29.8	31.9	26.7	27.2	29.1	31.1	26.0	26.6	**28.4**	30.4	24.7	25.3	27.0	28.8	22.9	23.4	25.0	26.7
		S/T	0.90	0.84	0.68	0.51	0.93	0.87	0.71	0.53	0.95	0.89	0.73	0.54	0.98	0.92	**0.75**	0.56	1.00	0.96	0.78	0.58	1.00	0.96	0.78	0.59
		ΔT	23	22	19	15	23	22	19	16	23	22	19	16	23	23	**20**	16	23	22	19	15	21	21	18	14
		kW	2.01	2.05	2.12	2.18	2.16	2.20	2.27	2.34	2.29	2.34	2.41	2.49	2.40	2.46	**2.53**	2.61	2.50	2.56	2.64	2.72	2.59	2.64	2.73	2.82
		Amps	7.1	7.3	7.6	7.8	7.7	7.9	8.2	8.5	8.4	8.6	8.9	9.2	9.0	9.2	**9.5**	9.9	9.6	9.8	10.1	10.5	10.1	10.4	10.7	11.1
		HI PR	240	258	273	284	269	290	306	319	306	330	348	363	349	375	**396**	413	392	422	446	465	433	466	493	514
		LO PR	107	114	125	133	114	121	132	140	118	126	137	146	124	132	**144**	153	130	138	151	161	134	143	156	166
	919	MBh	28.8	29.4	31.4	33.6	28.1	28.7	30.7	32.8	27.5	28.1	30.0	32.1	26.8	27.4	29.3	31.3	25.5	26.0	27.8	29.7	23.6	24.1	25.7	27.5
		S/T	0.94	0.88	0.72	0.54	1.00	0.91	0.74	0.56	1.00	0.94	0.76	0.57	1.00	0.97	0.79	0.59	1.00	1.00	0.82	0.61	1.00	1.00	0.82	0.62
		ΔT	22	21	18	15	23	21	19	15	22	21	19	15	22	22	19	15	21	21	19	15	19	20	17	14
		kW	2.03	2.07	2.13	2.20	2.18	2.22	2.29	2.36	2.31	2.36	2.43	2.51	2.42	2.48	2.55	2.64	2.52	2.58	2.66	2.74	2.61	2.66	2.75	2.84
		Amps	7.2	7.4	7.6	7.9	7.8	8.0	8.2	8.6	8.5	8.7	9.0	9.3	9.1	9.3	9.6	10.0	9.6	9.9	10.2	10.6	10.2	10.5	10.8	11.2
		HI PR	242	261	275	287	272	293	309	322	309	333	351	367	352	379	400	417	396	426	450	470	438	471	498	519
		LO PR	109	116	126	134	115	122	133	142	119	127	138	147	125	133	145	155	131	140	152	162	136	144	158	168
85	1181	MBh	26.3	26.8	28.0	29.9	25.7	26.1	27.4	29.2	25.0	25.5	26.7	28.5	24.4	24.9	26.1	27.8	23.2	23.7	24.8	26.4	21.5	21.9	23.0	24.5
		S/T	0.91	0.87	0.79	0.64	0.94	0.91	0.82	0.66	0.96	0.93	0.84	0.68	0.99	0.96	0.86	0.70	1.00	0.99	0.90	0.73	1.00	1.00	0.91	0.73
		ΔT	25	25	23	20	25	25	24	20	25	25	24	20	25	25	24	21	24	25	23	20	23	23	22	19
		kW	1.98	2.02	2.08	2.15	2.13	2.17	2.24	2.31	2.25	2.30	2.37	2.45	2.37	2.42	2.49	2.57	2.46	2.51	2.59	2.68	2.54	2.60	2.68	2.77
		Amps	7.0	7.2	7.4	7.7	7.6	7.8	8.0	8.3	8.2	8.4	8.7	9.0	8.8	9.0	9.3	9.7	9.4	9.6	9.9	10.3	9.9	10.2	10.5	10.9
		HI PR	235	253	267	279	264	284	300	313	300	323	341	356	342	368	388	405	384	414	437	456	425	457	483	503
		LO PR	105	112	122	130	111	118	129	138	116	123	134	143	121	129	141	150	127	135	148	157	132	140	153	163
	1050	MBh	28.5	29.0	30.4	32.4	27.8	28.3	29.7	31.7	27.1	27.7	29.0	30.9	26.5	27.0	28.3	30.1	25.1	25.6	26.8	28.6	23.3	23.7	24.9	26.5
		S/T	0.94	0.91	0.82	0.66	0.97	0.94	0.85	0.69	1.00	0.96	0.87	0.71	1.00	0.99	0.90	0.73	1.00	1.00	0.93	0.76	1.00	1.00	0.94	0.76
		ΔT	25	24	23	20	25	24	23	20	25	24	23	20	24	25	23	20	23	24	23	20	21	22	21	19
		kW	2.03	2.07	2.13	2.20	2.18	2.22	2.29	2.36	2.31	2.36	2.43	2.51	2.42	2.48	2.55	2.64	2.52	2.58	2.66	2.74	2.61	2.66	2.75	2.84
		Amps	7.2	7.4	7.6	7.9	7.8	8.0	8.2	8.6	8.5	8.7	9.0	9.3	9.1	9.3	9.6	10.0	9.6	9.9	10.2	10.6	10.2	10.5	10.8	11.2
		HI PR	242	261	275	287	272	293	309	322	309	333	351	367	352	379	400	417	396	426	450	470	438	471	498	519
		LO PR	109	116	126	134	115	122	133	142	119	127	138	147	125	133	145	155	131	140	152	162	136	144	158	168
	919	MBh	29.3	29.9	31.3	33.4	28.6	29.2	30.6	32.6	27.9	28.5	29.8	31.8	27.3	27.8	29.1	31.1	25.9	26.4	27.7	29.5	24.0	24.5	25.6	27.3
		S/T	0.98	0.95	0.86	0.70	1.00	0.98	0.89	0.72	1.00	1.00	0.91	0.74	1.00	1.00	0.94	0.76	1.00	1.00	0.98	0.79	1.00	1.00	0.98	0.80
		ΔT	24	23	22	19	23	23	22	19	23	23	22	19	22	23	22	19	21	22	22	19	20	20	21	18
		kW	2.04	2.08	2.15	2.21	2.19	2.24	2.31	2.38	2.33	2.37	2.45	2.53	2.44	2.49	2.57	2.66	2.54	2.60	2.68	2.77	2.63	2.69	2.77	2.86
		Amps	7.3	7.4	7.7	8.0	7.9	8.1	8.3	8.6	8.5	8.8	9.0	9.4	9.1	9.4	9.7	10.0	9.7	10.0	10.3	10.7	10.3	10.6	10.9	11.3
		HI PR	245	263	278	290	275	296	312	326	312	336	355	370	356	383	404	422	400	431	455	474	442	476	503	524
		LO PR	110	117	127	136	116	123	135	143	120	128	140	149	126	135	147	156	133	141	154	164	137	146	159	170

IDB: Entering Indoor Dry Bulb Temperature

Shaded area reflects AHRI conditions

Amps = outdoor unit amps (comp.+fan)

High and low pressures are measured at the liquid and suction service valves.

kW = Total system power

			Outdoor Ambient Temperature																							
			65				75				85				95				105				115			
			Entering Indoor Wet Bulb Temperature																							
IDB	Airflow		59	63	67	71	59	63	67	71	59	63	67	71	59	63	67	71	59	63	67	71	59	63	67	71
70	1050	MBh	31.1	32.2	35.3	-	30.4	31.5	34.5	-	29.6	30.7	33.7	-	28.9	30.0	32.8	-	27.5	28.5	31.2	-	25.4	26.4	28.9	-
		S/T	0.70	0.58	0.40	-	0.72	0.60	0.42	-	0.74	0.62	0.43	-	0.76	0.64	0.44	-	0.79	0.66	0.46	-	0.80	0.67	0.46	-
		ΔT	19	16	12	-	19	17	13	-	19	17	13	-	19	17	13	-	19	16	13	-	18	15	12	-
		kW	2.40	2.44	2.52	-	2.57	2.63	2.71	-	2.73	2.78	2.87	-	2.86	2.92	3.02	-	2.98	3.04	3.14	-	3.08	3.15	3.25	-
		Amps	8.7	8.9	9.2	-	9.4	9.7	10.0	-	10.3	10.5	10.9	-	11.0	11.3	11.6	-	11.7	12.0	12.4	-	12.4	12.7	13.1	-
		HI PR	214	231	244	-	241	259	273	-	274	294	311	-	312	335	354	-	351	377	398	-	387	417	440	-
		LO PR	99	106	115	-	105	112	122	-	109	116	127	-	115	122	133	-	120	128	139	-	124	132	144	-
	1200	MBh	33.7	34.9	38.2	-	32.9	34.1	37.4	-	32.1	33.3	36.5	-	31.3	32.5	35.6	-	29.8	30.8	33.8	-	27.6	28.6	31.3	-
		S/T	0.72	0.60	0.42	-	0.75	0.62	0.43	-	0.77	0.64	0.44	-	0.79	0.66	0.46	-	0.82	0.69	0.48	-	0.83	0.69	0.48	-
		ΔT	19	16	12	-	19	16	12	-	19	16	12	-	19	16	12	-	19	16	12	-	17	15	11	-
		kW	2.45	2.50	2.58	-	2.63	2.69	2.77	-	2.79	2.85	2.94	-	2.93	3.00	3.09	-	3.05	3.12	3.22	-	3.16	3.23	3.33	-
		Amps	9.0	9.2	9.5	-	9.7	10.0	10.3	-	10.6	10.8	11.2	-	11.3	11.6	12.0	-	12.0	12.3	12.8	-	12.8	13.1	13.5	-
		HI PR	221	238	251	-	248	267	282	-	282	304	321	-	321	346	365	-	361	389	411	-	399	430	454	-
		LO PR	102	109	119	-	108	115	126	-	112	120	131	-	118	126	137	-	124	132	144	-	128	136	149	-
	1350	MBh	34.7	36.0	39.4	-	33.9	35.1	38.5	-	33.1	34.3	37.6	-	32.3	33.4	36.6	-	30.7	31.8	34.8	-	28.4	29.4	32.2	-
		S/T	0.76	0.63	0.44	-	0.78	0.65	0.45	-	0.80	0.67	0.47	-	0.83	0.69	0.48	-	0.86	0.72	0.50	-	0.87	0.73	0.50	-
		ΔT	18	15	12	-	18	16	12	-	18	16	12	-	18	16	12	-	18	16	12	-	17	15	11	-
		kW	2.47	2.52	2.60	-	2.65	2.71	2.79	-	2.82	2.88	2.97	-	2.96	3.02	3.12	-	3.08	3.15	3.25	-	3.18	3.25	3.36	-
		Amps	9.1	9.3	9.6	-	9.8	10.0	10.4	-	10.7	10.9	11.3	-	11.4	11.7	12.1	-	12.1	12.5	12.9	-	12.9	13.2	13.7	-
		HI PR	223	240	254	-	250	270	285	-	285	307	324	-	324	349	369	-	365	393	415	-	403	434	458	-
		LO PR	103	110	120	-	109	116	127	-	114	121	132	-	119	127	139	-	125	133	145	-	129	138	150	-
75	1050	MBh	31.6	32.5	35.2	37.8	30.9	31.8	34.4	36.9	30.1	31.0	33.6	36.1	29.4	**30.3**	32.8	35.2	27.9	28.8	31.1	33.4	25.9	26.6	28.8	31.0
		S/T	0.79	0.71	0.54	0.34	0.82	0.73	0.55	0.36	0.84	0.75	0.57	0.37	0.87	**0.78**	0.59	0.38	0.90	0.81	0.61	0.39	0.91	0.81	0.61	0.40
		ΔT	22	20	17	11	22	20	17	12	22	20	17	12	22	**21**	17	12	22	20	17	11	21	19	16	11
		kW	2.41	2.46	2.54	2.62	2.59	2.65	2.73	2.81	2.75	2.81	2.89	2.99	2.89	**2.95**	3.04	3.14	3.00	3.07	3.17	3.27	3.11	3.17	3.28	3.38
		Amps	8.8	9.0	9.3	9.7	9.5	9.8	10.1	10.5	10.4	10.6	11.0	11.4	11.1	**11.4**	11.7	12.2	11.8	12.1	12.5	13.0	12.5	12.8	13.3	13.8
		HI PR	217	233	246	257	243	262	276	288	276	297	314	328	315	**339**	358	373	354	381	402	420	391	421	445	464
		LO PR	100	107	117	124	106	113	123	131	110	117	128	136	116	**123**	134	143	121	129	141	150	125	133	146	155
	1200	MBh	34.2	35.3	38.2	41.0	33.5	34.4	37.3	40.0	32.7	33.6	36.4	39.1	31.9	**32.8**	35.5	38.1	30.3	31.2	33.7	36.2	28.0	28.9	31.2	33.5
		S/T	0.82	0.73	0.56	0.36	0.85	0.76	0.58	0.37	0.87	0.78	0.59	0.38	0.90	**0.80**	0.61	0.39	0.93	0.83	0.63	0.41	0.94	0.84	0.64	0.41
		ΔT	22	20	16	11	22	20	16	11	22	20	16	11	22	**20**	17	11	22	20	16	11	20	19	15	11
		kW	2.47	2.52	2.60	2.68	2.65	2.71	2.79	2.88	2.82	2.88	2.97	3.06	2.96	**3.02**	3.12	3.22	3.08	3.15	3.25	3.35	3.18	3.25	3.36	3.47
		Amps	9.1	9.3	9.6	10.0	9.8	10.0	10.4	10.8	10.7	10.9	11.3	11.7	11.4	**11.7**	12.1	12.5	12.2	12.5	12.9	13.4	12.9	13.2	13.7	14.2
		HI PR	223	240	254	265	251	270	285	297	285	307	324	338	325	**349**	369	385	365	393	415	433	403	434	458	478
		LO PR	103	110	120	128	109	116	127	135	114	121	132	141	119	**127**	139	148	125	133	145	155	129	138	150	160
	1350	MBh	35.3	36.3	39.3	42.2	34.5	35.5	38.4	41.2	33.6	34.6	37.5	40.2	32.8	**33.8**	36.6	39.3	31.2	32.1	34.7	37.3	28.9	29.7	32.2	34.5
		S/T	0.86	0.77	0.58	0.37	0.89	0.80	0.60	0.39	0.91	0.82	0.62	0.40	0.94	**0.84**	0.64	0.41	0.98	0.88	0.66	0.43	0.99	0.88	0.67	0.43
		ΔT	21	19	16	11	21	19	16	11	21	19	16	11	21	**19**	16	11	21	19	16	11	19	18	15	10
		kW	2.49	2.54	2.62	2.70	2.68	2.73	2.82	2.91	2.84	2.90	2.99	3.09	2.98	**3.05**	3.14	3.25	3.10	3.17	3.27	3.38	3.21	3.28	3.39	3.50
		Amps	9.1	9.4	9.7	10.0	9.9	10.1	10.5	10.9	10.8	11.0	11.4	11.8	11.5	**11.8**	12.2	12.7	12.3	12.6	13.0	13.5	13.0	13.3	13.8	14.3
		HI PR	226	243	256	267	253	272	288	300	288	310	327	341	328	**353**	372	388	369	397	419	437	407	438	463	483
		LO PR	104	111	121	129	110	117	128	137	115	122	133	142	121	**128**	140	149	126	134	147	156	131	139	152	162

IDB: Entering Indoor Dry Bulb Temperature

Shaded area reflects ACCA (TVA) conditions

Amps = outdoor unit amps (comp.+fan)

High and low pressures are measured at the liquid and suction service valves.

kW = Total system power

Expanded Cooling Data — ASX130361F* (cont.)

			Outdoor Ambient Temperature																							
			65				75				85				95				105				115			
			Entering Indoor Wet Bulb Temperature																							
IDB	Airflow		59	63	67	71	59	63	67	71	59	63	67	71	59	63	67	71	59	63	67	71	59	63	67	71
80	1050	MBh	32.2	32.9	35.1	37.5	31.4	32.1	34.3	36.7	30.7	31.3	33.5	35.8	29.9	30.6	32.7	34.9	28.4	29.1	31.0	33.2	26.3	26.9	28.8	30.7
		S/T	0.87	0.81	0.66	0.49	0.90	0.84	0.69	0.51	0.92	0.86	0.70	0.53	0.95	0.89	0.73	0.54	0.99	0.93	0.75	0.56	1.00	0.93	0.76	0.57
		ΔT	24	23	20	16	25	24	21	16	25	24	21	16	25	24	21	17	25	24	20	16	23	22	19	15
		kW	2.43	2.48	2.56	2.64	2.61	2.67	2.75	2.84	2.77	2.83	2.92	3.01	2.91	2.97	3.07	3.17	3.03	3.09	3.19	3.30	3.13	3.20	3.30	3.41
		Amps	8.9	9.1	9.4	9.8	9.6	9.9	10.2	10.6	10.5	10.7	11.1	11.5	11.2	11.5	11.9	12.3	11.9	12.2	12.6	13.1	12.6	13.0	13.4	13.9
		Hi PR	219	235	249	259	245	264	279	291	279	300	317	331	318	342	361	377	358	385	406	424	395	425	449	468
		Lo PR	101	108	118	125	107	114	124	132	111	118	129	138	117	124	136	145	123	130	142	152	127	135	147	157
	1200	MBh	34.9	35.6	38.1	40.7	34.0	34.8	37.2	39.7	33.2	34.0	36.3	38.8	32.4	33.1	**35.4**	37.8	30.8	31.5	33.6	36.0	28.5	29.2	31.2	33.3
		S/T	0.90	0.84	0.69	0.51	0.93	0.87	0.71	0.53	0.96	0.90	0.73	0.55	0.99	0.93	**0.75**	0.56	1.00	0.96	0.78	0.58	1.00	0.97	0.79	0.59
		ΔT	24	23	20	16	24	23	20	16	24	23	20	16	25	23	**20**	16	24	23	20	16	22	22	19	15
		kW	2.49	2.54	2.62	2.70	2.68	2.73	2.82	2.91	2.84	2.90	2.99	3.09	2.98	3.05	**3.14**	3.25	3.11	3.17	3.27	3.38	3.21	3.28	3.39	3.50
		Amps	9.1	9.4	9.7	10.0	9.9	10.1	10.5	10.9	10.8	11.0	11.4	11.8	11.5	11.8	**12.2**	12.7	12.3	12.6	13.0	13.5	13.0	13.3	13.8	14.3
		Hi PR	226	243	256	267	253	272	288	300	288	310	327	341	328	353	**373**	389	369	397	419	437	407	438	463	483
		Lo PR	105	111	121	129	110	117	128	137	115	122	133	142	121	128	**140**	149	126	134	147	156	131	139	152	162
	1350	MBh	35.9	36.7	39.2	41.9	35.1	35.8	38.3	40.9	34.2	35.0	37.4	40.0	33.4	34.1	36.5	39.0	31.7	32.4	34.6	37.0	29.4	30.0	32.1	34.3
		S/T	0.94	0.88	0.72	0.54	1.00	0.92	0.75	0.56	1.00	0.94	0.76	0.57	1.00	0.97	0.79	0.59	1.00	1.00	0.82	0.61	1.00	1.00	0.83	0.62
		ΔT	23	22	19	15	24	22	19	16	23	22	19	16	23	23	20	16	22	22	19	15	20	20	18	14
		kW	2.51	2.56	2.64	2.72	2.70	2.75	2.84	2.93	2.86	2.92	3.01	3.11	3.01	3.07	3.17	3.27	3.13	3.20	3.30	3.41	3.24	3.31	3.42	3.53
		Amps	9.2	9.5	9.8	10.1	10.0	10.2	10.6	11.0	10.9	11.1	11.5	11.9	11.6	11.9	12.3	12.8	12.4	12.7	13.1	13.6	13.1	13.5	13.9	14.5
		Hi PR	228	245	259	270	256	275	290	303	291	313	330	345	331	356	376	392	372	401	423	441	412	443	468	488
		Lo PR	106	112	123	131	112	119	130	138	116	123	135	143	122	130	141	151	128	136	148	158	132	140	153	163
85	1050	MBh	32.7	33.4	34.9	37.3	32.0	32.6	34.1	36.4	31.2	31.8	33.3	35.6	30.5	31.0	32.5	34.7	28.9	29.5	30.9	33.0	26.8	27.3	28.6	30.5
		S/T	0.91	0.88	0.79	0.64	0.94	0.91	0.82	0.67	0.97	0.93	0.84	0.68	1.00	0.96	0.87	0.70	1.00	1.00	0.90	0.73	1.00	1.00	0.91	0.74
		ΔT	26	26	24	21	26	26	25	21	26	26	25	21	27	26	25	21	25	26	24	21	23	24	23	20
		kW	2.45	2.50	2.58	2.66	2.63	2.69	2.77	2.86	2.79	2.85	2.94	3.04	2.93	3.00	3.09	3.19	3.05	3.12	3.22	3.33	3.16	3.23	3.33	3.44
		Amps	9.0	9.2	9.5	9.9	9.7	10.0	10.3	10.7	10.6	10.8	11.2	11.6	11.3	11.6	12.0	12.4	12.0	12.3	12.8	13.2	12.8	13.1	13.5	14.0
		Hi PR	221	238	251	262	248	267	282	294	282	303	320	334	321	346	365	381	361	389	411	428	399	430	454	473
		Lo PR	102	109	119	127	108	115	126	134	112	120	131	139	118	126	137	146	124	132	144	153	128	136	149	158
	1200	MBh	35.5	36.2	37.9	40.4	34.6	35.3	37.0	39.5	33.8	34.5	36.1	38.5	33.0	33.6	35.2	37.6	31.3	31.9	33.5	35.7	29.0	29.6	31.0	33.1
		S/T	0.94	0.91	0.82	0.67	0.98	0.94	0.85	0.69	1.00	0.97	0.87	0.71	1.00	1.00	0.90	0.73	1.00	1.00	0.93	0.76	1.00	1.00	0.94	0.76
		ΔT	26	25	24	21	26	26	24	21	26	26	24	21	25	26	24	21	24	24	24	21	22	23	22	19
		kW	2.51	2.56	2.64	2.72	2.70	2.75	2.84	2.93	2.86	2.92	3.01	3.11	3.01	3.07	3.17	3.27	3.13	3.20	3.30	3.41	3.24	3.31	3.42	3.53
		Amps	9.2	9.5	9.8	10.1	10.0	10.2	10.6	11.0	10.9	11.1	11.5	11.9	11.6	11.9	12.3	12.8	12.4	12.7	13.1	13.6	13.1	13.5	13.9	14.5
		Hi PR	228	245	259	270	256	275	290	303	291	313	330	345	331	356	376	392	372	401	423	441	412	443	468	488
		Lo PR	106	112	123	131	112	119	130	138	116	123	135	143	122	130	141	151	128	136	148	158	132	140	153	163
	1350	MBh	36.5	37.2	39.0	41.6	35.7	36.4	38.1	40.6	34.8	35.5	37.2	39.7	34.0	34.6	36.3	38.7	32.3	32.9	34.5	36.8	29.9	30.5	31.9	34.1
		S/T	0.99	0.95	0.86	0.70	1.00	0.99	0.89	0.72	1.00	1.00	0.91	0.74	1.00	1.00	0.94	0.77	1.00	1.00	0.98	0.80	1.00	1.00	0.99	0.80
		ΔT	25	24	23	20	24	24	23	20	24	24	23	20	23	24	23	20	22	22	23	20	20	21	21	19
		kW	2.53	2.58	2.66	2.74	2.72	2.77	2.86	2.95	2.88	2.95	3.04	3.14	3.03	3.10	3.20	3.30	3.16	3.22	3.33	3.44	3.26	3.33	3.44	3.56
		Amps	9.3	9.5	9.9	10.2	10.1	10.3	10.7	11.1	11.0	11.2	11.6	12.1	11.7	12.0	12.4	12.9	12.5	12.8	13.2	13.8	13.3	13.6	14.0	14.6
		Hi PR	230	248	261	273	258	278	293	306	294	316	334	348	334	360	380	396	376	405	427	446	416	447	472	493
		Lo PR	107	113	124	132	113	120	131	139	117	125	136	145	123	131	143	152	129	137	150	159	133	142	155	165

IDB: Entering Indoor Dry Bulb Temperature

High and low pressures are measured at the liquid and suction service valves.

Shaded area reflects AHRI conditions

Amps = outdoor unit amps (comp.+fan)

kW = Total system power

			Outdoor Ambient Temperature																							
			65				75				85				95				105				115			
			Entering Indoor Wet Bulb Temperature																							
IDB	Airflow		59	63	67	71	59	63	67	71	59	63	67	71	59	63	67	71	59	63	67	71	59	63	67	71
70	1350	MBh	32.9	34.1	37.4	-	32.2	33.3	36.5	-	31.4	32.5	35.7	-	30.6	31.7	34.8	-	29.1	30.2	33.0	-	27.0	27.9	30.6	-
		S/T	0.77	0.65	0.45	-	0.80	0.67	0.46	-	0.82	0.69	0.48	-	0.85	0.71	0.49	-	0.88	0.74	0.51	-	0.89	0.74	0.51	-
		ΔT	17	15	11	-	18	15	12	-	18	15	12	-	18	15	12	-	17	15	11	-	16	14	11	-
		kW	2.44	2.49	2.55	-	2.61	2.65	2.73	-	2.75	2.80	2.88	-	2.88	2.94	3.02	-	2.99	3.05	3.14	-	3.08	3.14	3.24	-
		Amps	9.7	9.9	10.0	-	10.1	10.3	10.5	-	10.6	10.8	11.0	-	11.0	11.2	11.4	-	11.4	11.6	11.8	-	11.8	12.0	12.2	-
		HI PR	183	197	208	-	205	221	234	-	234	252	266	-	266	286	302	-	299	322	340	-	331	356	376	-
		LO PR	95	101	110	-	100	107	117	-	104	111	121	-	110	117	127	-	115	122	134	-	119	126	138	-
	1200	MBh	32.0	33.1	36.3	-	31.2	32.4	35.5	-	30.5	31.6	34.6	-	29.7	30.8	33.8	-	28.2	29.3	32.1	-	26.2	27.1	29.7	-
		S/T	0.74	0.62	0.43	-	0.76	0.64	0.44	-	0.78	0.65	0.45	-	0.81	0.68	0.47	-	0.84	0.70	0.49	-	0.85	0.71	0.49	-
		ΔT	18	16	12	-	18	16	12	-	18	16	12	-	18	16	12	-	18	16	12	-	17	15	11	-
		kW	2.42	2.47	2.54	-	2.59	2.64	2.71	-	2.73	2.78	2.86	-	2.86	2.91	3.00	-	2.96	3.02	3.11	-	3.06	3.12	3.21	-
		Amps	9.7	9.8	10.0	-	10.1	10.2	10.4	-	10.6	10.7	10.9	-	11.0	11.1	11.3	-	11.4	11.5	11.8	-	11.8	11.9	12.2	-
		HI PR	181	195	206	-	203	219	231	-	231	249	263	-	264	284	299	-	296	319	337	-	328	353	372	-
		LO PR	94	100	109	-	99	106	116	-	103	110	120	-	109	116	126	-	114	121	132	-	118	125	137	-
	1050	MBh	29.5	30.6	33.5	-	28.8	29.9	32.7	-	28.1	29.2	31.9	-	27.4	28.4	31.2	-	26.1	27.0	29.6	-	24.2	25.0	27.4	-
		S/T	0.71	0.59	0.41	-	0.74	0.62	0.43	-	0.76	0.63	0.44	-	0.78	0.65	0.45	-	0.81	0.68	0.47	-	0.82	0.68	0.47	-
		ΔT	18	16	12	-	19	16	12	-	19	16	12	-	19	16	12	-	18	16	12	-	17	15	11	-
		kW	2.37	2.42	2.48	-	2.53	2.58	2.65	-	2.67	2.72	2.80	-	2.79	2.85	2.93	-	2.90	2.96	3.04	-	2.99	3.05	3.14	-
		Amps	9.6	9.7	9.8	-	10.0	10.1	10.3	-	10.4	10.5	10.7	-	10.8	10.9	11.1	-	11.2	11.3	11.6	-	11.6	11.7	12.0	-
		HI PR	176	189	200	-	197	212	224	-	224	242	255	-	256	275	291	-	288	309	327	-	318	342	361	-
		LO PR	91	97	106	-	96	103	112	-	100	107	116	-	105	112	122	-	110	117	128	-	114	121	133	-
75	1350	MBh	33.5	34.5	37.3	40.0	32.7	33.7	36.4	39.1	31.9	32.9	35.6	38.2	31.1	32.1	34.7	37.3	29.6	30.5	33.0	35.4	27.4	28.2	30.5	32.8
		S/T	0.88	0.79	0.60	0.38	0.91	0.81	0.62	0.40	0.93	0.84	0.63	0.41	0.96	0.86	0.65	0.42	1.00	0.90	0.68	0.44	1.00	0.90	0.68	0.44
		ΔT	20	18	15	10	20	19	15	11	20	19	15	11	20	19	15	11	20	19	15	11	19	17	14	10
		kW	2.46	2.50	2.57	2.65	2.62	2.67	2.75	2.83	2.77	2.82	2.91	2.99	2.90	2.96	3.04	3.14	3.01	3.07	3.16	3.26	3.10	3.17	3.26	3.36
		Amps	9.8	9.9	10.1	10.3	10.2	10.3	10.5	10.7	10.7	10.8	11.0	11.3	11.1	11.2	11.4	11.7	11.5	11.7	11.9	12.2	11.9	12.1	12.3	12.6
		HI PR	185	199	210	219	208	223	236	246	236	254	268	280	269	289	306	319	303	326	344	359	334	360	380	396
		LO PR	96	102	112	119	101	108	118	126	105	112	123	130	111	118	129	137	116	124	135	144	120	128	139	149
	1200	MBh	32.5	33.5	36.2	38.9	31.8	32.7	35.4	38.0	31.0	31.9	34.5	37.1	30.2	**31.1**	33.7	36.2	28.7	29.6	32.0	34.4	26.6	27.4	29.7	31.8
		S/T	0.84	0.75	0.57	0.37	0.87	0.78	0.59	0.38	0.89	0.80	0.60	0.39	0.92	**0.82**	0.62	0.40	0.95	0.85	0.65	0.42	0.96	0.86	0.65	0.42
		ΔT	21	19	16	11	21	19	16	11	21	19	16	11	21	**20**	16	11	21	19	16	11	20	18	15	10
		kW	2.44	2.49	2.56	2.63	2.61	2.66	2.73	2.81	2.75	2.80	2.89	2.97	2.88	**2.94**	3.02	3.11	2.99	3.05	3.14	3.23	3.08	3.14	3.24	3.34
		Amps	9.7	9.9	10.0	10.2	10.1	10.3	10.5	10.7	10.6	10.8	11.0	11.2	11.0	**11.2**	11.4	11.6	11.4	11.6	11.8	12.1	11.8	12.0	12.2	12.5
		HI PR	183	197	208	217	206	221	234	244	234	252	266	277	266	**287**	303	316	300	322	340	355	331	356	376	392
		LO PR	95	101	110	118	100	107	117	124	104	111	121	129	110	**117**	127	136	115	122	134	142	119	127	138	147
	1050	MBh	30.0	30.9	33.4	35.9	29.3	30.2	32.7	35.1	28.6	29.5	31.9	34.2	27.9	28.7	31.1	33.4	26.5	27.3	29.6	31.7	24.6	25.3	27.4	29.4
		S/T	0.81	0.72	0.55	0.35	0.84	0.75	0.57	0.36	0.86	0.77	0.58	0.37	0.89	0.79	0.60	0.39	0.92	0.82	0.62	0.40	0.93	0.83	0.63	0.40
		ΔT	21	20	16	11	21	20	16	11	22	20	16	11	22	20	16	11	21	20	16	11	20	18	15	10
		kW	2.39	2.43	2.50	2.57	2.55	2.60	2.67	2.75	2.69	2.74	2.82	2.90	2.81	2.87	2.95	3.04	2.92	2.98	3.07	3.16	3.01	3.07	3.16	3.26
		Amps	9.6	9.7	9.9	10.1	10.0	10.1	10.3	10.5	10.5	10.6	10.8	11.0	10.8	11.0	11.2	11.4	11.2	11.4	11.6	11.9	11.6	11.8	12.0	12.3
		HI PR	178	191	202	211	199	215	227	236	227	244	258	269	258	278	293	306	291	313	330	344	321	345	365	380
		LO PR	92	98	107	114	97	104	113	121	101	108	118	125	106	113	124	132	112	119	130	138	115	123	134	143

IDB: Entering Indoor Dry Bulb Temperature

High and low pressures are measured at the liquid and suction service valves.

Shaded area reflects ACCA (TVA) conditions

kW = Total system power

Amps = outdoor unit amps (comp.+fan)

Design Subcooling 9 ±3 °F @ the liquid service valve, ARI 95 test conditions

Expanded Cooling Data — ASX130361F* (cont.)

			Outdoor Ambient Temperature																							
			65ºF				75ºF				85ºF				95ºF				105ºF				115ºF			
			Entering Indoor Wet Bulb Temperature																							
IDB	**Airflow**		**59**	**63**	**67**	**71**	**59**	**63**	**67**	**71**	**59**	**63**	**67**	**71**	**59**	**63**	**67**	**71**	**59**	**63**	**67**	**71**	**59**	**63**	**67**	**71**
		MBh	34.1	34.8	37.2	39.8	33.3	34.0	36.3	38.8	32.5	33.2	35.5	37.9	31.7	32.4	34.6	37.0	30.1	30.8	32.9	35.1	27.9	28.5	30.5	32.6
		S/T	0.96	0.90	0.74	0.6	1.00	0.94	0.76	0.57	1.00	0.96	0.78	0.6	1.00	1.00	0.81	0.60	1.00	1.00	0.84	0.6	1.00	1.00	0.84	0.63
		Δ T	22	21	19	15	23	22	19	15	22	22	19	15	22	22	19	15	21	21	19	15	19	19	18	14
	1350	kW	2.48	2.52	2.59	2.7	2.64	2.69	2.77	2.85	2.79	2.85	2.93	3.0	2.92	2.98	3.07	3.16	3.03	3.09	3.19	3.3	3.13	3.19	3.29	3.39
		/anos	9.8	10.0	10.1	10.3	10.2	10.4	10.6	10.8	10.7	10.9	11.1	11.3	11.1	11.3	11.5	11.8	11.5	11.7	12.0	12.2	12.0	12.1	12.4	12.7
		Hi PR	187	201	212	221.5	210	226	238	249	238	257	271	282.7	272	292	309	322	306	329	347	362.2	338	363	384	400
		Lo PR	97	103	113	120.0	103	109	119	127	107	113	124	131.8	112	119	130	138	117	125	136	145.1	121	129	141	150
		MBh	33.1	33.8	36.1	38.6	32.3	33.0	35.3	37.7	31.5	32.2	34.4	36.8	30.8	31.4	**33.6**	35.9	29.2	29.9	31.9	34.1	27.1	27.7	29.6	31.6
		S/T	0.92	0.86	0.70	0.5	0.95	0.89	0.73	0.54	0.98	0.92	0.75	0.6	1.00	0.95	**0.77**	0.58	1.00	0.98	0.80	0.6	1.00	0.99	0.81	0.60
		Δ T	23	22	19	16	24	23	20	16	24	23	20	16	24	23	**20**	16	22	22	20	16	21	21	18	15
80	**1200**	kW	2.46	2.50	2.57	2.6	2.62	2.67	2.75	2.83	2.77	2.82	2.91	3.0	2.90	2.96	**3.05**	3.14	3.01	3.07	3.16	3.3	3.10	3.17	3.26	3.36
		/anos	9.8	9.9	10.1	10.3	10.2	10.3	10.5	10.7	10.7	10.8	11.0	11.3	11.1	11.2	**11.5**	11.7	11.5	11.7	11.9	12.2	11.9	12.1	12.3	12.6
		Hi PR	185	199	210	219.3	208	223	236	246	236	254	268	279.9	269	289	**306**	319	303	326	344	358.6	334	360	380	396
		Lo PR	96	102	112	118.8	102	108	118	126	105	112	123	130.5	111	118	**129**	137	116	124	135	143.6	120	128	140	149
		MBh	30.5	31.2	33.3	35.6	29.8	30.5	32.6	34.8	29.1	29.8	31.8	34.0	28.4	29.0	31.0	33.2	27.0	27.6	29.5	31.5	25.0	25.5	27.3	29.2
		S/T	0.89	0.83	0.68	0.5	0.92	0.86	0.70	0.52	0.94	0.88	0.72	0.5	0.97	0.91	0.74	0.55	1.01	0.95	0.77	0.6	1.02	0.95	0.78	0.58
		Δ T	24	23	20	16	24	23	20	16	24	23	20	16	24	23	20	16	24	23	20	16	22	21	19	15
	1050	kW	2.41	2.45	2.52	2.6	2.57	2.62	2.69	2.77	2.71	2.76	2.84	2.9	2.84	2.89	2.98	3.07	2.94	3.00	3.09	3.2	3.03	3.10	3.19	3.29
		/anos	9.7	9.8	9.9	10.1	10.0	10.2	10.4	10.6	10.5	10.6	10.8	11.1	10.9	11.1	11.3	11.5	11.3	11.5	11.7	11.9	11.7	11.9	12.1	12.4
		Hi PR	179	193	204	212.7	201	217	229	239	229	246	260	271.5	261	281	296	309	293	316	333	347.8	324	349	368	384
		Lo PR	93	99	108	115.3	98	105	114	122	102	109	119	126.6	107	114	125	133	113	120	131	139.3	117	124	135	144
		MBh	34.7	35.3	37.0	39.5	33.9	34.5	36.2	38.6	33.1	33.7	35.3	37.7	32.3	32.9	34.4	36.7	30.6	31.2	32.7	34.9	28.4	28.9	30.3	32.3
		S/T	1.00	0.98	0.88	0.71	1.00	1.00	0.91	0.74	1.00	1.00	0.94	0.76	1.00	1.00	0.97	0.78	1.00	1.00	1.00	0.81	1.00	1.00	1.00	0.82
		Δ T	24	23	22	19	23	24	22	19	23	23	22	19	22	22	23	20	21	21	22	19	19	20	21	18
	1350	kW	2.49	2.54	2.61	2.68	2.66	2.71	2.79	2.87	2.81	2.87	2.95	3.04	2.94	3.00	3.09	3.19	3.06	3.12	3.21	3.31	3.15	3.22	3.31	3.42
		/anos	9.9	10.0	10.2	10.4	10.3	10.4	10.6	10.8	10.8	10.9	11.1	11.4	11.2	11.4	11.6	11.8	11.6	11.8	12.0	12.3	12.0	12.2	12.5	12.7
		Hi PR	189	203	214	224	212	228	241	251	241	259	274	285	274	295	312	325	309	332	351	366	341	367	387	404
		Lo PR	98	104	114	121	104	110	120	128	108	114	125	133	113	120	131	140	118	126	138	147	123	130	142	152
		MBh	33.7	34.3	35.9	38.3	32.9	33.5	35.1	37.5	32.1	32.7	34.3	36.6	31.3	31.9	33.4	35.7	29.7	30.3	31.8	33.9	27.6	28.1	29.4	31.4
		S/T	0.96	0.93	0.84	0.68	1.00	0.96	0.87	0.71	1.00	0.99	0.89	0.72	1.00	1.00	0.92	0.75	1.00	1.00	0.96	0.78	1.00	1.00	0.96	0.78
		Δ T	25	24	23	20	25	25	23	20	25	25	23	20	24	24	24	20	23	23	23	20	21	22	22	19
85	**1200**	kW	2.48	2.52	2.59	2.67	2.64	2.69	2.77	2.85	2.79	2.85	2.93	3.02	2.92	2.98	3.07	3.16	3.03	3.09	3.19	3.28	3.13	3.19	3.29	3.39
		/anos	9.8	10.0	10.1	10.3	10.2	10.4	10.6	10.8	10.7	10.9	11.1	11.3	11.1	11.3	11.5	11.8	11.5	11.7	12.0	12.2	12.0	12.1	12.4	12.7
		Hi PR	187	201	212	221	210	226	238	249	238	257	271	283	272	292	309	322	306	329	347	362	338	363	384	400
		Lo PR	97	103	113	120	103	109	119	127	107	113	124	132	112	119	130	138	117	125	136	145	121	129	141	150
		MBh	31.1	31.7	33.2	35.4	30.3	30.9	32.4	34.6	29.6	30.2	31.6	33.7	28.9	29.5	30.9	32.9	27.5	28.0	29.3	31.3	25.4	25.9	27.2	29.0
		S/T	0.93	0.90	0.81	0.66	0.96	0.93	0.84	0.68	0.99	0.95	0.86	0.70	1.00	0.98	0.89	0.72	1.00	1.00	0.92	0.75	1.00	1.00	0.93	0.75
		Δ T	25	25	24	20	26	25	24	21	26	25	24	21	25	25	24	21	24	25	24	20	22	23	22	19
	1050	kW	2.42	2.47	2.54	2.61	2.59	2.64	2.71	2.79	2.73	2.78	2.86	2.95	2.86	2.91	3.00	3.09	2.96	3.02	3.11	3.21	3.06	3.12	3.21	3.31
		/anos	9.7	9.8	10.0	10.2	10.1	10.2	10.4	10.6	10.6	10.7	10.9	11.1	11.0	11.1	11.3	11.6	11.4	11.5	11.7	12.0	11.8	11.9	12.2	12.5
		Hi PR	181	195	206	215	203	219	231	241	231	249	263	274	263	284	299	312	296	319	337	351	327	352	372	388
		Lo PR	94	100	109	116	99	106	115	123	103	110	120	128	109	115	126	134	114	121	132	141	118	125	137	146

IDB: Entering Indoor Dry Bulb Temperature
High and low pressures are measured at the liquid and suction service valves.

Shaded area reflects AHRI conditions
kW = Total system power

Amps = outdoor unit amps (comp.+fan)
Design Subcooling 9 ±3 °F @ the liquid service valve, ARI 95 test conditions

			Outdoor Ambient Temperature																							
			65				75				85				95				105				115			
			Entering Indoor Wet Bulb Temperature																							
IDB	Airflow		59	63	67	71	59	63	67	71	59	63	67	71	59	63	67	71	59	63	67	71	59	63	67	71
70	1225	MBh	36.0	37.3	40.9	-	35.2	36.4	39.9	-	34.3	35.6	39.0	-	33.5	34.7	38.0	-	31.8	33.0	36.1	-	29.5	30.5	33.5	-
		S/T	0.69	0.57	0.40	-	0.71	0.59	0.41	-	0.73	0.61	0.42	-	0.75	0.63	0.44	-	0.78	0.65	0.45	-	0.79	0.66	0.46	-
		ΔT	19	16	12	-	19	16	12	-	19	16	12	-	19	16	12	-	19	16	12	-	17	15	11	-
		kW	2.78	2.84	2.92	-	2.98	3.04	3.13	-	3.15	3.21	3.31	-	3.30	3.37	3.47	-	3.43	3.50	3.61	-	3.54	3.61	3.73	-
		Amps	10.7	10.9	11.2	-	11.5	11.8	12.1	-	12.5	12.7	13.2	-	13.3	13.6	14.0	-	14.1	14.5	14.9	-	14.9	15.3	15.8	-
		Hi PR	209	225	238	-	235	253	267	-	267	288	304	-	304	328	346	-	343	369	389	-	378	407	430	-
		Lo PR	101	107	117	-	106	113	124	-	111	118	129	-	116	124	135	-	122	130	141	-	126	134	146	-
	1400	MBh	39.0	40.4	44.3	-	38.1	39.5	43.3	-	37.2	38.5	42.2	-	36.3	37.6	41.2	-	34.5	35.7	39.1	-	31.9	33.1	36.3	-
		S/T	0.71	0.59	0.41	-	0.74	0.62	0.43	-	0.76	0.63	0.44	-	0.78	0.65	0.45	-	0.81	0.68	0.47	-	0.82	0.68	0.47	-
		ΔT	18	16	12	-	18	16	12	-	18	16	12	-	19	16	12	-	18	16	12	-	17	15	11	-
		kW	2.84	2.90	2.98	-	3.05	3.11	3.20	-	3.22	3.29	3.39	-	3.38	3.45	3.55	-	3.51	3.58	3.70	-	3.63	3.70	3.82	-
		Amps	10.9	11.2	11.6	-	11.8	12.1	12.5	-	12.8	13.1	13.5	-	13.7	14.0	14.4	-	14.5	14.9	15.3	-	15.4	15.7	16.2	-
		Hi PR	216	232	245	-	242	261	275	-	276	297	313	-	314	338	357	-	353	380	401	-	390	420	443	-
		Lo PR	104	111	121	-	110	117	127	-	114	121	132	-	120	127	139	-	126	134	146	-	130	138	151	-
	1575	MBh	40.2	41.6	45.6	-	39.2	40.7	44.6	-	38.3	39.7	43.5	-	37.4	38.7	42.4	-	35.5	36.8	40.3	-	32.9	34.1	37.3	-
		S/T	0.75	0.62	0.43	-	0.77	0.65	0.45	-	0.79	0.66	0.46	-	0.82	0.68	0.47	-	0.85	0.71	0.49	-	0.86	0.72	0.50	-
		ΔT	18	15	11	-	18	15	12	-	18	15	12	-	18	15	12	-	18	15	12	-	16	14	11	-
		kW	2.87	2.92	3.01	-	3.07	3.13	3.22	-	3.25	3.31	3.41	-	3.41	3.48	3.58	-	3.54	3.61	3.73	-	3.66	3.73	3.85	-
		Amps	11.0	11.3	11.7	-	11.9	12.2	12.6	-	12.9	13.2	13.6	-	13.8	14.1	14.6	-	14.6	15.0	15.5	-	15.5	15.9	16.4	-
		Hi PR	218	235	248	-	245	263	278	-	278	300	316	-	317	341	360	-	357	384	405	-	394	424	448	-
		Lo PR	105	112	122	-	111	118	129	-	115	123	134	-	121	129	141	-	127	135	147	-	131	140	152	-
75	1225	MBh	36.6	37.7	40.8	43.8	35.8	36.8	39.9	42.8	34.9	35.9	38.9	41.8	34.1	**35.1**	38.0	40.7	32.4	33.3	36.1	38.7	30.0	30.9	33.4	35.8
		S/T	0.78	0.70	0.53	0.34	0.81	0.72	0.55	0.35	0.83	0.74	0.56	0.36	0.86	**0.77**	0.58	0.37	0.89	0.79	0.60	0.39	0.90	0.80	0.61	0.39
		ΔT	21	20	16	11	22	20	16	11	22	20	16	11	22	**20**	17	11	22	20	16	11	20	19	15	10
		kW	2.80	2.86	2.94	3.03	3.00	3.06	3.15	3.24	3.17	3.24	3.33	3.44	3.33	**3.39**	3.50	3.61	3.46	3.53	3.64	3.75	3.57	3.64	3.76	3.88
		Amps	10.8	11.0	11.3	11.8	11.6	11.9	12.2	12.7	12.6	12.9	13.3	13.8	13.4	**13.7**	14.2	14.7	14.2	14.6	15.1	15.6	15.1	15.4	15.9	16.5
		Hi PR	212	228	240	251	237	256	270	281	270	291	307	320	308	**331**	350	365	346	372	393	410	382	411	434	453
		Lo PR	102	108	118	126	108	114	125	133	112	119	130	138	117	**125**	136	145	123	131	143	152	127	135	148	157
	1400	MBh	39.7	40.8	44.2	47.4	38.7	39.9	43.2	46.3	37.8	38.9	42.2	45.2	36.9	**38.0**	41.1	44.1	35.1	36.1	39.1	41.9	32.5	33.4	36.2	38.8
		S/T	0.81	0.72	0.55	0.35	0.84	0.75	0.57	0.37	0.86	0.77	0.58	0.37	0.89	**0.79**	0.60	0.39	0.92	0.82	0.62	0.40	0.93	0.83	0.63	0.40
		ΔT	21	19	16	11	21	20	16	11	21	20	16	11	22	**20**	16	11	21	20	16	11	20	18	15	10
		kW	2.87	2.92	3.01	3.10	3.07	3.13	3.22	3.32	3.25	3.31	3.41	3.52	3.41	**3.48**	3.58	3.70	3.54	3.61	3.73	3.84	3.66	3.73	3.85	3.97
		Amps	11.0	11.3	11.7	12.1	11.9	12.2	12.6	13.0	12.9	13.2	13.6	14.1	13.8	**14.1**	14.6	15.1	14.6	15.0	15.5	16.1	15.5	15.9	16.4	17.0
		Hi PR	218	235	248	259	245	263	278	290	278	300	316	330	317	**341**	360	376	357	384	405	423	394	424	448	467
		Lo PR	105	112	122	130	111	118	129	137	115	123	134	143	121	**129**	141	150	127	135	147	157	131	140	152	162
	1575	MBh	40.9	42.1	45.5	48.9	39.9	41.1	44.5	47.7	39.0	40.1	43.4	46.6	38.0	**39.1**	42.4	45.5	36.1	37.2	40.2	43.2	33.4	34.4	37.3	40.0
		S/T	0.85	0.76	0.57	0.37	0.88	0.79	0.60	0.38	0.90	0.81	0.61	0.39	0.93	**0.83**	0.63	0.41	0.97	0.86	0.65	0.42	0.97	0.87	0.66	0.42
		ΔT	20	19	15	11	20	19	15	11	21	19	15	11	21	**19**	16	11	20	19	15	11	19	18	14	10
		kW	2.89	2.94	3.03	3.12	3.09	3.15	3.25	3.35	3.27	3.34	3.44	3.55	3.43	**3.50**	3.61	3.72	3.57	3.64	3.76	3.87	3.68	3.76	3.88	4.00
		Amps	11.1	11.4	11.8	12.2	12.0	12.3	12.7	13.2	13.0	13.3	13.8	14.3	13.9	**14.2**	14.7	15.2	14.8	15.1	15.6	16.2	15.6	16.0	16.5	17.2
		Hi PR	220	237	250	261	247	266	281	293	281	303	320	333	320	**345**	364	380	360	388	409	427	398	428	452	472
		Lo PR	106	113	123	131	112	119	130	139	116	124	135	144	122	**130**	142	151	128	136	149	158	133	141	154	164

IDB: Entering Indoor Dry Bulb Temperature

Shaded area reflects ACCA (TVA) conditions

Amps = outdoor unit amps (comp.+fan)

High and low pressures are measured at the liquid and suction service valves.

kW = Total system power

Expanded Expanded Cooling Data — ASX130421** (cont.)

			Outdoor Ambient Temperature																							
			65				75				85				95				105				115			
			Entering Indoor Wet Bulb Temperature																							
IDB	Airflow		59	63	67	71	59	63	67	71	59	63	67	71	59	63	67	71	59	63	67	71	59	63	67	71
80	1225	MBh	37.3	38.1	40.7	43.5	36.4	37.2	39.7	42.5	35.5	36.3	38.8	41.5	34.7	35.4	37.8	40.5	32.9	33.6	36.0	38.4	30.5	31.2	33.3	35.6
		S/T	0.86	0.80	0.65	0.49	0.89	0.83	0.68	0.51	0.91	0.85	0.69	0.52	0.94	0.88	0.72	0.54	0.97	0.91	0.74	0.56	0.98	0.92	0.75	0.56
		ΔT	24	23	20	16	24	23	20	16	24	23	20	16	24	23	20	16	24	23	20	16	22	22	19	15
		kW	2.82	2.88	2.96	3.05	3.02	3.08	3.17	3.27	3.20	3.26	3.36	3.46	3.35	3.42	3.53	3.64	3.48	3.56	3.67	3.78	3.60	3.67	3.79	3.91
		Amps	10.8	11.1	11.4	11.9	11.7	12.0	12.4	12.8	12.7	13.0	13.4	13.9	13.5	13.8	14.3	14.8	14.4	14.7	15.2	15.8	15.2	15.6	16.1	16.7
		Hi PR	214	230	243	253	240	258	273	284	273	294	310	323	311	334	353	368	350	376	397	414	386	416	439	458
		Lo PR	103	109	119	127	109	116	126	134	113	120	131	140	119	126	138	147	124	132	144	154	129	137	149	159
	1400	MBh	40.4	41.3	44.1	47.1	39.4	40.3	43.1	46.0	38.5	39.3	42.0	44.9	37.6	38.4	**41.0**	43.8	35.7	36.5	39.0	41.6	33.0	33.8	36.1	38.6
		S/T	0.89	0.83	0.68	0.51	0.92	0.86	0.70	0.52	0.94	0.88	0.72	0.54	0.97	0.91	**0.74**	0.56	1.00	0.95	0.77	0.58	1.00	0.96	0.78	0.58
		ΔT	24	23	20	16	24	23	20	16	24	23	20	16	24	23	**20**	16	23	23	20	16	22	21	18	15
		kW	2.89	2.94	3.03	3.12	3.09	3.15	3.25	3.35	3.27	3.34	3.44	3.55	3.43	3.50	**3.61**	3.72	3.57	3.64	3.76	3.88	3.68	3.76	3.88	4.01
		Amps	11.1	11.4	11.8	12.2	12.0	12.3	12.7	13.2	13.0	13.3	13.8	14.3	13.9	14.2	**14.7**	15.2	14.8	15.1	15.6	16.2	15.6	16.0	16.5	17.2
		Hi PR	220	237	250	261	247	266	281	293	281	303	320	333	320	345	**364**	380	360	388	410	427	398	428	452	472
		Lo PR	106	113	123	131	112	119	130	139	116	124	135	144	122	130	**142**	151	128	136	149	158	133	141	154	164
	1575	MBh	41.6	42.5	45.4	48.5	40.6	41.5	44.3	47.4	39.6	40.5	43.3	46.3	38.7	39.5	42.2	45.1	36.7	37.6	40.1	42.9	34.0	34.8	37.2	39.7
		S/T	0.93	0.87	0.71	0.53	0.96	0.90	0.74	0.55	1.00	0.93	0.75	0.56	1.00	0.96	0.78	0.58	1.00	1.00	0.81	0.60	1.00	1.00	0.82	0.61
		ΔT	23	22	19	15	23	22	19	15	23	22	19	15	23	22	19	15	21	22	19	15	20	20	18	14
		kW	2.91	2.96	3.05	3.14	3.11	3.18	3.27	3.37	3.30	3.36	3.47	3.58	3.46	3.53	3.64	3.75	3.60	3.67	3.79	3.91	3.71	3.79	3.91	4.04
		Amps	11.2	11.5	11.9	12.3	12.1	12.4	12.8	13.3	13.1	13.5	13.9	14.4	14.0	14.4	14.8	15.4	14.9	15.3	15.8	16.4	15.8	16.2	16.7	17.3
		Hi PR	223	240	253	264	250	269	284	296	284	306	323	337	324	348	368	383	364	392	414	431	402	433	457	477
		Lo PR	107	114	124	132	113	120	131	140	118	125	137	145	123	131	143	153	129	138	150	160	134	142	155	166
85	1225	MBh	37.9	38.6	40.5	43.2	37.0	37.7	39.5	42.2	36.2	36.9	38.6	41.2	35.3	36.0	37.7	40.2	33.5	34.2	35.8	38.2	31.0	31.6	33.1	35.4
		S/T	0.90	0.87	0.78	0.63	0.93	0.90	0.81	0.66	0.95	0.92	0.83	0.67	0.98	0.95	0.86	0.70	1.00	0.99	0.89	0.72	1.00	0.99	0.90	0.73
		ΔT	26	25	24	21	26	25	24	21	26	25	24	21	26	26	24	21	25	25	24	21	23	24	22	19
		kW	2.84	2.90	2.98	3.07	3.04	3.11	3.20	3.29	3.22	3.29	3.39	3.49	3.38	3.45	3.55	3.66	3.51	3.58	3.70	3.81	3.63	3.70	3.82	3.94
		Amps	10.9	11.2	11.6	12.0	11.8	12.1	12.5	12.9	12.8	13.1	13.5	14.0	13.6	14.0	14.4	15.0	14.5	14.9	15.3	15.9	15.4	15.7	16.2	16.8
		Hi PR	216	232	245	256	242	261	275	287	276	297	313	327	314	338	357	372	353	380	401	418	390	420	443	462
		Lo PR	104	110	121	128	110	117	127	136	114	121	132	141	120	127	139	148	126	134	146	155	130	138	151	161
	1400	MBh	41.1	41.9	43.9	46.8	40.1	40.9	42.8	45.7	39.2	39.9	41.8	44.6	38.2	39.0	40.8	43.5	36.3	37.0	38.8	41.3	33.6	34.3	35.9	38.3
		S/T	0.93	0.90	0.81	0.66	0.96	0.93	0.84	0.68	0.99	0.95	0.86	0.70	1.00	0.98	0.89	0.72	1.00	1.00	0.92	0.75	1.00	1.00	0.93	0.75
		ΔT	25	25	23	20	25	25	24	20	25	25	24	20	25	25	24	21	24	24	23	20	22	23	22	19
		kW	2.91	2.96	3.05	3.14	3.11	3.18	3.27	3.37	3.30	3.36	3.47	3.58	3.46	3.53	3.64	3.75	3.60	3.67	3.79	3.91	3.71	3.79	3.91	4.04
		Amps	11.2	11.5	11.9	12.3	12.1	12.4	12.8	13.3	13.1	13.5	13.9	14.4	14.0	14.4	14.8	15.4	14.9	15.3	15.8	16.4	15.8	16.2	16.7	17.3
		Hi PR	223	240	253	264	250	269	284	296	284	306	323	337	324	348	368	383	364	392	414	431	402	433	457	477
		Lo PR	107	114	124	132	113	120	131	140	118	125	137	145	123	131	143	153	129	138	150	160	134	142	155	166
	1575	MBh	42.3	43.1	45.2	48.2	41.3	42.1	44.1	47.1	40.3	41.1	43.1	45.9	39.4	40.1	42.0	44.8	37.4	38.1	39.9	42.6	34.6	35.3	37.0	39.4
		S/T	0.98	0.94	0.85	0.69	1.00	0.98	0.88	0.71	1.00	1.00	0.90	0.73	1.00	1.00	0.93	0.76	1.00	1.00	0.97	0.78	1.00	1.00	0.98	0.79
		ΔT	24	24	22	19	24	24	23	20	24	24	23	20	23	23	23	20	22	22	23	20	20	21	21	18
		kW	2.93	2.99	3.07	3.17	3.14	3.20	3.30	3.40	3.32	3.39	3.49	3.60	3.49	3.56	3.67	3.78	3.62	3.70	3.82	3.94	3.74	3.82	3.94	4.07
		Amps	11.3	11.6	12.0	12.4	12.2	12.5	12.9	13.4	13.3	13.6	14.0	14.5	14.2	14.5	15.0	15.5	15.0	15.4	15.9	16.5	15.9	16.3	16.9	17.5
		Hi PR	225	242	255	266	252	271	287	299	287	309	326	340	327	352	371	387	368	396	418	436	406	437	462	481
		Lo PR	108	115	126	134	114	122	133	141	119	126	138	147	125	133	145	154	131	139	152	162	135	144	157	167

IDB: Entering Indoor Dry Bulb Temperature

Shaded area reflects AHRI conditions

Amps = outdoor unit amps (comp.+fan)

High and low pressures are measured at the liquid and suction service valves.

kW = Total system power

			Outdoor Ambient Temperature																							
			65				75				85				95				105				115			
			Entering Indoor Wet Bulb Temperature																							
IDB	Airflow		59	63	67	71	59	63	67	71	59	63	67	71	59	63	67	71	59	63	67	71	59	63	67	71
70	1400	MBh	40.4	41.9	45.9	-	39.5	40.9	44.8	-	38.5	39.9	43.7	-	37.6	38.9	42.7	-	35.7	37.0	40.5	-	33.1	34.3	37.5	-
		S/T	0.71	0.59	0.41	-	0.73	0.61	0.42	-	0.75	0.63	0.44	-	0.78	0.65	0.45	-	0.81	0.67	0.47	-	0.81	0.68	0.47	-
		ΔT	19	16	12	-	19	16	12	-	19	16	13	-	19	17	13	-	19	16	12	-	18	15	12	-
		kW	3.17	3.23	3.32	-	3.39	3.46	3.56	-	3.59	3.66	3.77	-	3.77	3.84	3.96	-	3.91	4.00	4.12	-	4.04	4.13	4.26	-
		Amps	11.6	11.9	12.3	-	12.6	12.9	13.3	-	13.7	14.0	14.5	-	14.6	15.0	15.5	-	15.5	15.9	16.5	-	16.5	16.9	17.4	-
		Hi PR	215	231	244	-	241	259	274	-	274	295	311	-	312	336	354	-	351	377	399	-	388	417	440	-
		Lo PR	104	111	121	-	110	117	128	-	115	122	133	-	120	128	140	-	126	134	146	-	130	139	151	-
	1600	MBh	43.8	45.4	49.7	-	42.7	44.3	48.5	-	41.7	43.2	47.4	-	40.7	42.2	46.2	-	38.7	40.1	43.9	-	35.8	37.1	40.7	-
		S/T	0.73	0.61	0.43	-	0.76	0.64	0.44	-	0.78	0.65	0.45	-	0.81	0.67	0.47	-	0.84	0.70	0.48	-	0.84	0.70	0.49	-
		ΔT	18	16	12	-	19	16	12	-	19	16	12	-	19	16	12	-	19	16	12	-	17	15	11	-
		kW	3.24	3.30	3.40	-	3.47	3.54	3.65	-	3.67	3.75	3.87	-	3.86	3.94	4.06	-	4.01	4.09	4.22	-	4.14	4.23	4.36	-
		Amps	12.0	12.3	12.7	-	12.9	13.2	13.7	-	14.1	14.4	14.9	-	15.0	15.4	15.9	-	16.0	16.4	16.9	-	16.9	17.4	17.9	-
		Hi PR	221	238	251	-	248	267	282	-	282	304	321	-	321	346	365	-	362	389	411	-	400	430	454	-
		Lo PR	108	114	125	-	114	121	132	-	118	126	137	-	124	132	144	-	130	138	151	-	134	143	156	-
	1800	MBh	45.1	46.7	51.2	-	44.0	45.6	50.0	-	43.0	44.5	48.8	-	41.9	43.5	47.6	-	39.8	41.3	45.2	-	36.9	38.2	41.9	-
		S/T	0.77	0.64	0.45	-	0.80	0.67	0.46	-	0.82	0.68	0.47	-	0.85	0.71	0.49	-	0.88	0.73	0.51	-	0.88	0.74	0.51	-
		ΔT	18	15	12	-	18	16	12	-	18	16	12	-	18	16	12	-	18	15	12	-	17	14	11	-
		kW	3.26	3.33	3.42	-	3.50	3.57	3.67	-	3.70	3.78	3.90	-	3.89	3.97	4.09	-	4.04	4.13	4.26	-	4.18	4.26	4.40	-
		Amps	12.1	12.4	12.8	-	13.0	13.4	13.8	-	14.2	14.5	15.0	-	15.2	15.5	16.0	-	16.1	16.5	17.1	-	17.1	17.5	18.1	-
		Hi PR	223	240	254	-	251	270	285	-	285	307	324	-	325	349	369	-	365	393	415	-	404	434	459	-
		Lo PR	109	116	126	-	115	122	133	-	119	127	139	-	125	133	146	-	131	140	152	-	136	144	158	-
75	1400	MBh	41.1	42.3	45.8	49.1	40.1	41.3	44.7	48.0	39.2	40.3	43.7	46.8	38.2	**39.3**	42.6	45.7	36.3	37.4	40.5	43.4	33.6	34.6	37.5	40.2
		S/T	0.81	0.72	0.55	0.35	0.83	0.75	0.56	0.36	0.86	0.77	0.58	0.37	0.88	**0.79**	0.60	0.38	0.92	0.82	0.62	0.40	0.92	0.83	0.63	0.40
		ΔT	22	20	16	11	22	20	17	11	22	20	17	11	22	**20**	17	12	22	20	16	11	20	19	15	11
		kW	3.19	3.25	3.35	3.45	3.42	3.49	3.59	3.70	3.62	3.69	3.80	3.92	3.79	**3.87**	3.99	4.12	3.95	4.03	4.15	4.29	4.08	4.16	4.29	4.43
		Amps	11.7	12.0	12.4	12.9	12.7	13.0	13.4	13.9	13.8	14.1	14.6	15.1	14.7	**15.1**	15.6	16.2	15.7	16.1	16.6	17.2	16.6	17.0	17.6	18.3
		Hi PR	217	233	246	257	243	262	276	288	277	298	314	328	315	**339**	358	373	354	381	403	420	391	421	445	464
		Lo PR	105	112	122	130	111	118	129	138	116	123	134	143	122	**129**	141	150	127	136	148	158	132	140	153	163
	1600	MBh	44.5	45.8	49.6	53.2	43.5	44.8	48.4	52.0	42.4	43.7	47.3	50.8	41.4	**42.6**	46.1	49.5	39.3	40.5	43.8	47.0	36.4	37.5	40.6	43.6
		S/T	0.84	0.75	0.57	0.36	0.87	0.77	0.59	0.38	0.89	0.79	0.60	0.39	0.92	**0.82**	0.62	0.40	0.95	0.85	0.64	0.41	0.96	0.86	0.65	0.42
		ΔT	21	20	16	11	22	20	16	11	22	20	16	11	22	**20**	16	11	21	20	16	11	20	18	15	10
		kW	3.26	3.33	3.42	3.53	3.50	3.57	3.68	3.79	3.70	3.78	3.90	4.02	3.89	**3.97**	4.09	4.22	4.04	4.13	4.26	4.39	4.18	4.26	4.40	4.54
		Amps	12.1	12.4	12.8	13.2	13.1	13.4	13.8	14.3	14.2	14.5	15.0	15.6	15.2	**15.5**	16.1	16.7	16.1	16.5	17.1	17.7	17.1	17.5	18.1	18.8
		Hi PR	223	240	254	265	251	270	285	297	285	307	324	338	325	**349**	369	385	365	393	415	433	404	434	459	478
		Lo PR	109	116	126	134	115	122	133	142	119	127	139	148	125	**133**	146	155	131	140	153	162	136	145	158	168
	1800	MBh	45.8	47.2	51.1	54.8	44.8	46.1	49.9	53.6	43.7	45.0	48.7	52.3	42.6	**43.9**	47.5	51.0	40.5	41.7	45.1	48.5	37.5	38.6	41.8	44.9
		S/T	0.88	0.78	0.59	0.38	0.91	0.81	0.61	0.40	0.93	0.83	0.63	0.41	0.96	**0.86**	0.65	0.42	1.00	0.89	0.67	0.43	1.00	0.90	0.68	0.44
		ΔT	21	19	15	11	21	19	16	11	21	19	16	11	21	**19**	16	11	21	19	16	11	19	18	15	10
		kW	3.29	3.35	3.45	3.55	3.52	3.59	3.70	3.82	3.73	3.81	3.93	4.05	3.92	**4.00**	4.12	4.26	4.07	4.16	4.29	4.43	4.21	4.30	4.44	4.58
		Amps	12.2	12.5	12.9	13.4	13.2	13.5	13.9	14.5	14.3	14.7	15.1	15.7	15.3	**15.7**	16.2	16.8	16.3	16.7	17.2	17.9	17.3	17.7	18.3	19.0
		Hi PR	226	243	256	267	253	272	288	300	288	310	327	341	328	**353**	373	389	369	397	419	437	408	439	463	483
		Lo PR	110	117	127	136	116	123	135	143	120	128	140	149	127	**135**	147	157	133	141	154	164	137	146	159	170

IDB: Entering Indoor Dry Bulb Temperature

Shaded area reflects ACCA (TVA) conditions

Amps = outdoor unit amps (comp.+fan)

High and low pressures are measured at the liquid and suction service valves.

kW = Total system power

Expanded Cooling Data — ASX130481** (cont.)

			Outdoor Ambient Temperature																							
			65				75				85				95				105				115			
			Entering Indoor Wet Bulb Temperature																							
IDB	Airflow		59	63	67	71	59	63	67	71	59	63	67	71	59	63	67	71	59	63	67	71	59	63	67	71
80	1400	MBh	41.8	42.7	45.6	48.8	40.8	41.7	44.6	47.7	39.9	40.7	43.5	46.5	38.9	39.7	42.5	45.4	36.9	37.8	40.3	43.1	34.2	35.0	37.4	39.9
		S/T	0.88	0.83	0.67	0.50	0.92	0.86	0.70	0.52	0.94	0.88	0.72	0.54	0.97	0.91	0.74	0.55	1.01	0.94	0.77	0.57	1.01	0.95	0.77	0.58
		ΔT	24	23	20	16	25	24	20	16	25	24	20	16	25	24	21	16	24	23	20	16	23	22	19	15
		kW	3.21	3.28	3.37	3.47	3.44	3.51	3.62	3.73	3.65	3.72	3.83	3.95	3.82	3.90	4.03	4.15	3.98	4.06	4.19	4.32	4.11	4.20	4.33	4.47
		Amps	11.9	12.1	12.5	13.0	12.8	13.1	13.6	14.1	13.9	14.3	14.7	15.3	14.9	15.2	15.8	16.3	15.8	16.2	16.8	17.4	16.8	17.2	17.8	18.5
		Hi PR	219	236	249	259	246	264	279	291	279	301	317	331	318	342	362	377	358	385	407	424	395	426	449	469
		Lo PR	106	113	124	132	112	120	131	139	117	124	136	145	123	131	143	152	129	137	149	159	133	142	155	165
	1600	MBh	45.3	46.3	49.5	52.9	44.2	45.2	48.3	51.6	43.2	44.1	47.2	50.4	42.1	43.1	**46.0**	49.2	40.0	40.9	43.7	46.7	37.1	37.9	40.5	43.3
		S/T	0.92	0.86	0.70	0.52	0.95	0.89	0.72	0.54	0.97	0.91	0.74	0.56	1.00	0.94	**0.77**	0.57	1.00	0.98	0.80	0.60	1.00	0.99	0.80	0.60
		ΔT	24	23	20	16	24	23	20	16	24	23	20	16	24	23	**20**	16	23	23	20	16	21	21	19	15
		kW	3.29	3.35	3.45	3.56	3.52	3.59	3.70	3.82	3.73	3.81	3.93	4.05	3.92	4.00	**4.12**	4.26	4.07	4.16	4.29	4.43	4.21	4.30	4.44	4.58
		Amps	12.2	12.5	12.9	13.4	13.2	13.5	13.9	14.5	14.3	14.7	15.2	15.7	15.3	15.7	**16.2**	16.8	16.3	16.7	17.3	17.9	17.3	17.7	18.3	19.0
		Hi PR	226	243	256	267	253	272	288	300	288	310	327	341	328	353	**373**	389	369	397	419	437	408	439	463	483
		Lo PR	110	117	127	136	116	123	135	143	120	128	140	149	127	135	**147**	157	133	141	154	164	137	146	159	170
	1800	MBh	46.7	47.7	50.9	54.4	45.6	46.6	49.7	53.2	44.5	45.5	48.6	51.9	43.4	44.3	47.4	50.6	41.2	42.1	45.0	48.1	38.2	39.0	41.7	44.6
		S/T	0.96	0.90	0.73	0.55	1.00	0.93	0.76	0.57	1.00	0.96	0.78	0.58	1.00	1.00	0.80	0.60	1.00	1.00	0.83	0.62	1.00	1.00	0.84	0.63
		ΔT	23	22	19	15	23	22	19	15	23	22	19	15	22	23	19	16	21	22	19	15	20	20	18	14
		kW	3.31	3.38	3.48	3.58	3.55	3.62	3.73	3.85	3.76	3.84	3.96	4.08	3.95	4.03	4.16	4.29	4.11	4.19	4.33	4.47	4.24	4.33	4.47	4.62
		Amps	12.3	12.6	13.0	13.5	13.3	13.6	14.1	14.6	14.4	14.8	15.3	15.9	15.4	15.8	16.4	17.0	16.4	16.8	17.4	18.1	17.4	17.9	18.5	19.2
		Hi PR	228	245	259	270	256	275	291	303	291	313	331	345	331	356	376	393	373	401	423	442	412	443	468	488
		Lo PR	111	118	129	137	117	125	136	145	122	129	141	151	128	136	148	158	134	143	156	166	139	147	161	171
85	1400	MBh	42.5	43.4	45.4	48.5	41.5	42.4	44.4	47.3	40.6	41.3	43.3	46.2	39.6	40.3	42.2	45.1	37.6	38.3	40.1	42.8	34.8	35.5	37.2	39.7
		S/T	0.93	0.89	0.81	0.65	0.96	0.93	0.84	0.68	0.98	0.95	0.86	0.70	1.00	0.98	0.88	0.72	1.00	1.00	0.92	0.74	1.00	1.00	0.93	0.75
		ΔT	26	25	24	21	26	26	24	21	26	26	24	21	26	26	25	21	25	25	24	21	23	23	23	20
		kW	3.24	3.30	3.40	3.50	3.47	3.54	3.65	3.76	3.67	3.75	3.86	3.99	3.85	3.94	4.06	4.19	4.01	4.09	4.22	4.36	4.14	4.23	4.36	4.50
		Amps	12.0	12.2	12.6	13.1	12.9	13.2	13.7	14.2	14.0	14.4	14.9	15.4	15.0	15.4	15.9	16.5	16.0	16.4	16.9	17.6	16.9	17.4	17.9	18.6
		Hi PR	221	238	251	262	248	267	282	294	282	304	321	334	321	346	365	381	361	389	411	428	399	430	454	473
		Lo PR	108	114	125	133	114	121	132	140	118	126	137	146	124	132	144	153	130	138	151	161	134	143	156	166
	1600	MBh	46.1	47.0	49.2	52.5	45.0	45.9	48.1	51.3	43.9	44.8	46.9	50.1	42.9	43.7	45.8	48.8	40.7	41.5	43.5	46.4	37.7	38.5	40.3	43.0
		S/T	0.96	0.93	0.84	0.68	1.00	0.96	0.87	0.70	1.00	0.98	0.89	0.72	1.00	1.00	0.92	0.74	1.00	1.00	0.95	0.77	1.00	1.00	0.96	0.78
		ΔT	25	25	24	20	26	25	24	21	25	25	24	21	25	25	24	21	23	24	24	21	22	22	22	19
		kW	3.31	3.38	3.48	3.58	3.55	3.62	3.73	3.85	3.76	3.84	3.96	4.08	3.95	4.03	4.16	4.29	4.11	4.19	4.33	4.47	4.24	4.33	4.47	4.62
		Amps	12.3	12.6	13.0	13.5	13.3	13.6	14.1	14.6	14.4	14.8	15.3	15.9	15.4	15.8	16.4	17.0	16.4	16.8	17.4	18.1	17.4	17.9	18.5	19.2
		Hi PR	228	245	259	270	256	275	291	303	291	313	331	345	331	356	376	393	373	401	423	442	412	443	468	488
		Lo PR	111	118	129	137	117	125	136	145	122	129	141	151	128	136	148	158	134	143	156	166	139	147	161	171
	1800	MBh	47.5	48.4	50.7	54.1	46.4	47.3	49.5	52.8	45.3	46.1	48.3	51.6	44.2	45.0	47.1	50.3	42.0	42.8	44.8	47.8	38.9	39.6	41.5	44.3
		S/T	1.00	0.97	0.88	0.71	1.00	1.00	0.91	0.74	1.00	1.00	0.93	0.76	1.00	1.00	0.96	0.78	1.00	1.00	1.00	0.81	1.00	1.00	1.00	0.82
		ΔT	24	24	23	20	24	24	23	20	23	24	23	20	23	23	23	20	21	22	23	20	20	20	21	18
		kW	3.34	3.40	3.50	3.61	3.58	3.65	3.76	3.88	3.79	3.87	3.99	4.11	3.98	4.06	4.19	4.32	4.14	4.23	4.36	4.50	4.28	4.37	4.51	4.65
		Amps	12.4	12.7	13.1	13.6	13.4	13.7	14.2	14.7	14.6	14.9	15.4	16.0	15.6	16.0	16.5	17.1	16.6	17.0	17.6	18.2	17.6	18.0	18.6	19.3
		Hi PR	230	248	262	273	258	278	294	306	294	316	334	348	335	360	380	397	376	405	428	446	416	448	473	493
		Lo PR	112	119	130	138	118	126	137	146	123	131	143	152	129	137	150	160	135	144	157	167	140	149	163	173

IDB: Entering Indoor Dry Bulb Temperature

Shaded area reflects AHRI conditions

Amps = outdoor unit amps (comp.+fan)

High and low pressures are measured at the liquid and suction service valves.

kW = Total system power

			Outdoor Ambient Temperature																							
			65				75				85				95				105				115			
			Entering Indoor Wet Bulb Temperature																							
IDB	Airflow		59	63	67	71	59	63	67	71	59	63	67	71	59	63	67	71	59	63	67	71	59	63	67	71
70	1500	MBh	50.1	51.9	56.8	-	48.9	50.7	55.5	-	47.7	49.5	54.2	-	46.6	48.3	52.9	-	44.2	45.8	50.2	-	41.0	42.5	46.5	-
		S/T	0.67	0.56	0.39	-	0.69	0.58	0.40	-	0.71	0.59	0.41	-	0.73	0.61	0.42	-	0.76	0.64	0.44	-	0.77	0.64	0.44	-
		ΔT	21	18	13	-	21	18	14	-	21	18	14	-	21	18	14	-	21	18	14	-	19	17	13	-
		kW	3.87	3.95	4.07	-	4.16	4.24	4.38	-	4.41	4.50	4.65	-	4.63	4.73	4.89	-	4.82	4.93	5.09	-	4.99	5.10	5.26	-
		Amps	14.4	14.8	15.3	-	15.6	16.0	16.5	-	17.0	17.4	18.0	-	18.2	18.6	19.2	-	19.3	19.8	20.5	-	20.5	21.0	21.7	-
		HI PR	229	246	260	-	257	276	292	-	292	314	332	-	333	358	378	-	374	403	425	-	413	445	470	-
		LO PR	101	108	118	-	107	114	125	-	111	119	129	-	117	125	136	-	123	130	142	-	127	135	147	-
	1750	MBh	54.2	56.2	61.6	-	53.0	54.9	60.1	-	51.7	53.6	58.7	-	50.4	52.3	57.3	-	47.9	49.7	54.4	-	44.4	46.0	50.4	-
		S/T	0.69	0.58	0.40	-	0.72	0.60	0.42	-	0.74	0.62	0.43	-	0.76	0.64	0.44	-	0.79	0.66	0.46	-	0.80	0.66	0.46	-
		ΔT	20	17	13	-	20	17	13	-	20	17	13	-	20	17	13	-	20	17	13	-	19	16	12	-
		kW	3.96	4.04	4.17	-	4.26	4.35	4.48	-	4.52	4.62	4.76	-	4.75	4.85	5.01	-	4.95	5.05	5.22	-	5.12	5.23	5.40	-
		Amps	14.8	15.2	15.7	-	16.1	16.4	17.0	-	17.5	17.9	18.5	-	18.7	19.1	19.8	-	19.9	20.4	21.1	-	21.1	21.6	22.4	-
		HI PR	236	254	268	-	265	285	301	-	301	324	342	-	343	369	390	-	386	415	438	-	426	459	484	-
		LO PR	105	111	122	-	111	118	128	-	115	122	133	-	121	128	140	-	126	135	147	-	131	139	152	-
	2000	MBh	55.9	57.9	63.4	-	54.6	56.5	62.0	-	53.3	55.2	60.5	-	52.0	53.9	59.0	-	49.4	51.2	56.1	-	45.7	47.4	51.9	-
		S/T	0.73	0.61	0.42	-	0.75	0.63	0.44	-	0.77	0.65	0.45	-	0.80	0.67	0.46	-	0.83	0.69	0.48	-	0.83	0.70	0.48	-
		ΔT	19	16	12	-	19	16	12	-	19	16	12	-	19	16	13	-	19	16	12	-	18	15	12	-
		kW	3.99	4.07	4.20	-	4.29	4.38	4.52	-	4.56	4.65	4.80	-	4.79	4.89	5.05	-	4.99	5.10	5.26	-	5.16	5.27	5.44	-
		Amps	15.0	15.3	15.8	-	16.2	16.6	17.2	-	17.6	18.1	18.7	-	18.9	19.3	20.0	-	20.1	20.6	21.3	-	21.3	21.8	22.6	-
		HI PR	238	256	271	-	267	288	304	-	304	327	346	-	346	373	394	-	390	419	443	-	430	463	489	-
		LO PR	106	112	123	-	112	119	130	-	116	123	135	-	122	130	142	-	128	136	148	-	132	141	153	-
75	1500	MBh	50.9	52.4	56.7	60.9	49.7	51.2	55.4	59.5	48.5	50.0	54.1	58.1	47.3	**48.8**	52.8	56.6	45.0	46.3	50.1	53.8	41.7	42.9	46.4	49.8
		S/T	0.76	0.68	0.51	0.33	0.79	0.70	0.53	0.34	0.81	0.72	0.55	0.35	0.83	**0.75**	0.56	0.36	0.87	0.77	0.59	0.38	0.87	0.78	0.59	0.38
		ΔT	24	22	18	12	24	22	18	13	24	22	18	13	24	**22**	18	13	24	22	18	12	22	21	17	12
		kW	3.90	3.98	4.10	4.23	4.19	4.28	4.41	4.55	4.45	4.54	4.68	4.84	4.67	**4.77**	4.93	5.09	4.86	4.97	5.13	5.30	5.03	5.14	5.31	5.48
		Amps	14.6	14.9	15.4	16.0	15.8	16.1	16.7	17.3	17.1	17.6	18.1	18.8	18.3	**18.8**	19.4	20.2	19.5	20.0	20.7	21.5	20.7	21.2	21.9	22.8
		HI PR	231	249	263	274	259	279	295	307	295	317	335	350	336	**362**	382	398	378	407	430	448	418	449	475	495
		LO PR	103	109	119	127	108	115	126	134	113	120	131	139	118	**126**	137	146	124	132	144	153	128	136	149	159
	1750	MBh	55.1	56.8	61.5	66.0	53.9	55.5	60.0	64.4	52.6	54.1	58.6	62.9	51.3	**52.8**	57.2	61.4	48.7	50.2	54.3	58.3	45.1	46.5	50.3	54.0
		S/T	0.79	0.71	0.53	0.34	0.82	0.73	0.55	0.36	0.84	0.75	0.57	0.36	0.86	**0.77**	0.59	0.38	0.90	0.80	0.61	0.39	0.91	0.81	0.61	0.39
		ΔT	23	21	17	12	23	21	17	12	23	21	17	12	23	**21**	18	12	23	21	17	12	21	20	16	11
		kW	3.99	4.07	4.20	4.33	4.29	4.38	4.52	4.66	4.56	4.65	4.80	4.96	4.79	**4.89**	5.05	5.22	4.99	5.10	5.26	5.44	5.16	5.27	5.44	5.63
		Amps	15.0	15.3	15.8	16.4	16.2	16.6	17.2	17.8	17.6	18.1	18.7	19.4	18.9	**19.3**	20.0	20.8	20.1	20.6	21.3	22.1	21.3	21.8	22.6	23.5
		HI PR	238	256	271	282	267	288	304	317	304	327	346	360	346	**373**	394	411	390	419	443	462	431	463	489	510
		LO PR	106	112	123	131	112	119	130	138	116	123	135	144	122	**130**	142	151	128	136	148	158	132	141	153	163
	2000	MBh	56.8	58.5	63.3	67.9	55.5	57.1	61.8	66.4	54.2	55.8	60.4	64.8	52.8	**54.4**	58.9	63.2	50.2	51.7	55.9	60.0	46.5	47.9	51.8	55.6
		S/T	0.83	0.74	0.56	0.36	0.86	0.77	0.58	0.37	0.88	0.79	0.59	0.38	0.91	**0.81**	0.61	0.39	0.94	0.84	0.64	0.41	0.95	0.85	0.64	0.41
		ΔT	22	20	16	11	22	20	16	11	22	20	16	11	22	**20**	17	11	22	20	16	11	20	19	15	11
		kW	4.02	4.11	4.23	4.37	4.33	4.42	4.56	4.70	4.59	4.69	4.84	5.00	4.83	**4.93**	5.09	5.26	5.03	5.14	5.31	5.48	5.20	5.32	5.49	5.67
		Amps	15.1	15.5	16.0	16.6	16.4	16.8	17.3	18.0	17.8	18.2	18.8	19.6	19.0	**19.5**	20.2	20.9	20.3	20.8	21.5	22.3	21.5	22.0	22.8	23.7
		HI PR	241	259	274	285	270	291	307	320	307	331	349	364	350	**376**	398	415	394	424	447	466	435	468	494	515
		LO PR	107	114	124	132	113	120	131	139	117	125	136	145	123	**131**	143	152	129	137	150	160	133	142	155	165

IDB: Entering Indoor Dry Bulb Temperature

Shaded area reflects ACCA (TVA) conditions

Amps = outdoor unit amps (comp.+fan)

High and low pressures are measured at the liquid and suction service valves.

kW = Total system power

Expanded Cooling Data — ASX130601** (cont.)

			Outdoor Ambient Temperature																							
			65				75				85				95				105				115			
			Entering Indoor Wet Bulb Temperature																							
IDB	Airflow		59	63	67	71	59	63	67	71	59	63	67	71	59	63	67	71	59	63	67	71	59	63	67	71
80	1500	MBh	51.8	52.9	56.6	60.5	50.6	51.7	55.2	59.1	49.4	50.5	53.9	57.6	48.2	49.2	52.6	56.2	45.8	46.8	50.0	53.4	42.4	43.3	46.3	49.5
		S/T	0.83	0.78	0.64	0.48	0.86	0.81	0.66	0.49	0.89	0.83	0.68	0.51	0.91	0.86	0.70	0.52	0.95	0.89	0.72	0.54	0.96	0.90	0.73	0.55
		ΔT	26	25	22	18	27	26	22	18	27	26	22	18	27	26	23	18	27	26	22	18	25	24	21	17
		kW	3.93	4.01	4.13	4.26	4.22	4.31	4.45	4.59	4.48	4.58	4.72	4.88	4.71	4.81	4.97	5.13	4.90	5.01	5.17	5.34	5.07	5.18	5.35	5.53
		Amps	14.7	15.1	15.6	16.1	15.9	16.3	16.8	17.5	17.3	17.7	18.3	19.0	18.5	19.0	19.6	20.4	19.7	20.2	20.9	21.7	20.9	21.4	22.2	23.0
		HI PR	234	251	265	277	262	282	298	311	298	321	339	353	339	365	386	402	382	411	434	453	422	454	479	500
		LO PR	104	110	120	128	109	116	127	135	114	121	132	141	119	127	139	148	125	133	145	155	129	138	150	160
	1750	MBh	56.1	57.4	61.3	65.5	54.8	56.0	59.9	64.0	53.5	54.7	58.4	62.5	52.2	53.4	**57.0**	60.9	49.6	50.7	54.2	57.9	45.9	46.9	50.2	53.6
		S/T	0.86	0.81	0.66	0.49	0.90	0.84	0.68	0.51	0.92	0.86	0.70	0.52	0.95	0.89	**0.72**	0.54	0.98	0.92	0.75	0.56	0.99	0.93	0.76	0.57
		ΔT	25	24	21	17	26	25	22	17	26	25	22	17	26	25	**22**	17	26	25	21	17	24	23	20	16
		kW	4.02	4.11	4.23	4.37	4.33	4.42	4.56	4.70	4.59	4.69	4.84	5.00	4.83	4.93	**5.09**	5.26	5.03	5.14	5.31	5.48	5.20	5.32	5.49	5.67
		Amps	15.1	15.5	16.0	16.6	16.4	16.8	17.3	18.0	17.8	18.2	18.8	19.6	19.0	19.5	**20.2**	20.9	20.3	20.8	21.5	22.3	21.5	22.0	22.8	23.7
		HI PR	241	259	274	285	270	291	307	320	307	331	349	364	350	377	**398**	415	394	424	447	467	435	468	494	515
		LO PR	107	114	124	132	113	120	131	140	117	125	136	145	123	131	**143**	152	129	137	150	160	133	142	155	165
	2000	MBh	57.8	59.1	63.1	67.5	56.5	57.7	61.6	65.9	55.1	56.3	60.2	64.3	53.8	55.0	58.7	62.8	51.1	52.2	55.8	59.6	47.3	48.4	51.7	55.2
		S/T	0.91	0.85	0.69	0.52	0.94	0.88	0.72	0.54	0.96	0.90	0.74	0.55	1.00	0.93	0.76	0.57	1.00	0.97	0.79	0.59	1.00	1.00	0.79	0.59
		ΔT	24	23	20	16	24	23	20	16	24	23	20	16	25	24	20	16	23	23	20	16	22	22	19	15
		kW	4.05	4.14	4.27	4.40	4.36	4.45	4.59	4.74	4.63	4.73	4.88	5.04	4.87	4.97	5.13	5.30	5.07	5.18	5.35	5.53	5.24	5.36	5.54	5.72
		Amps	15.2	15.6	16.1	16.7	16.5	16.9	17.5	18.1	18.0	18.4	19.0	19.8	19.2	19.7	20.4	21.1	20.5	21.0	21.7	22.5	21.7	22.3	23.0	23.9
		HI PR	243	262	276	288	273	294	310	323	310	334	353	368	353	380	402	419	398	428	452	471	439	473	499	521
		LO PR	108	115	125	133	114	121	132	141	118	126	137	146	124	132	144	154	130	139	151	161	135	143	157	167
85	1500	MBh	52.7	53.7	56.3	60.0	51.5	52.5	55.0	58.6	50.3	51.2	53.7	57.2	49.0	50.0	52.3	55.8	46.6	47.5	49.7	53.1	43.1	44.0	46.1	49.1
		S/T	0.87	0.84	0.76	0.62	0.91	0.87	0.79	0.64	0.93	0.90	0.81	0.66	0.96	0.93	0.83	0.68	1.00	0.96	0.87	0.70	1.00	0.97	0.87	0.71
		ΔT	28	28	26	23	29	28	27	23	29	28	27	23	29	28	27	23	28	28	26	23	26	26	25	21
		kW	3.96	4.04	4.17	4.30	4.26	4.35	4.48	4.62	4.52	4.61	4.76	4.92	4.75	4.85	5.01	5.17	4.94	5.05	5.22	5.39	5.11	5.23	5.40	5.58
		Amps	14.8	15.2	15.7	16.3	16.0	16.4	17.0	17.6	17.5	17.9	18.5	19.2	18.7	19.1	19.8	20.5	19.9	20.4	21.1	21.9	21.1	21.6	22.4	23.2
		HI PR	236	254	268	280	265	285	301	314	301	324	342	357	343	369	390	406	386	415	438	457	426	459	484	505
		LO PR	105	111	121	129	110	118	128	137	115	122	133	142	121	128	140	149	126	134	147	156	131	139	152	162
	1750	MBh	57.1	58.2	61.0	65.0	55.8	56.9	59.6	63.5	54.5	55.5	58.1	62.0	53.1	54.2	56.7	60.5	50.5	51.4	53.9	57.5	46.7	47.7	49.9	53.2
		S/T	0.91	0.87	0.79	0.64	0.94	0.91	0.82	0.66	0.96	0.93	0.84	0.68	0.99	0.96	0.87	0.70	1.00	1.00	0.90	0.73	1.00	1.00	0.91	0.74
		ΔT	27	27	25	22	28	27	26	22	28	27	26	22	28	27	26	22	27	27	25	22	25	25	24	21
		kW	4.05	4.14	4.27	4.40	4.36	4.45	4.59	4.74	4.63	4.73	4.88	5.04	4.87	4.97	5.13	5.30	5.07	5.18	5.35	5.53	5.24	5.36	5.54	5.72
		Amps	15.2	15.6	16.1	16.7	16.5	16.9	17.5	18.1	18.0	18.4	19.0	19.8	19.2	19.7	20.4	21.1	20.5	21.0	21.7	22.5	21.7	22.3	23.0	23.9
		HI PR	243	262	276	288	273	294	310	323	310	334	353	368	353	380	402	419	398	428	452	471	439	473	499	521
		LO PR	108	115	125	133	114	121	132	141	118	126	137	146	124	132	144	154	130	139	151	161	135	143	157	167
	2000	MBh	58.8	60.0	62.8	67.0	57.5	58.6	61.3	65.4	56.1	57.2	59.9	63.9	54.7	55.8	58.4	62.3	52.0	53.0	55.5	59.2	48.2	49.1	51.4	54.8
		S/T	0.95	0.92	0.83	0.67	0.99	0.95	0.86	0.70	1.00	0.97	0.88	0.71	1.00	1.00	0.91	0.74	1.00	1.00	0.94	0.76	1.00	1.00	0.95	0.77
		ΔT	26	25	24	21	26	26	24	21	26	26	24	21	25	26	24	21	24	24	24	21	22	23	22	19
		kW	4.09	4.17	4.30	4.44	4.39	4.49	4.63	4.78	4.67	4.77	4.92	5.08	4.91	5.01	5.18	5.35	5.11	5.22	5.39	5.57	5.29	5.40	5.58	5.77
		Amps	15.4	15.8	16.3	16.9	16.7	17.1	17.6	18.3	18.1	18.6	19.2	19.9	19.4	19.9	20.6	21.3	20.7	21.2	21.9	22.7	21.9	22.5	23.2	24.1
		HI PR	246	264	279	291	276	297	313	327	313	337	356	371	357	384	406	423	402	432	456	476	444	477	504	526
		LO PR	109	116	126	135	115	122	134	142	120	127	139	148	126	134	146	155	132	140	153	163	136	145	158	168

IDB: Entering Indoor Dry Bulb Temperature

High and low pressures are measured at the liquid and suction service valves.

Shaded area reflects AHRI conditions

Amps = outdoor unit amps (comp.+fan)

kW = Total system power

			Outdoor Ambient Temperature																							
			65				75				85				95				105				115			
			Entering Indoor Wet Bulb Temperature																							
IDB	Airflow		59	63	67	71	59	63	67	71	59	63	67	71	59	63	67	71	59	63	67	71	59	63	67	71
70	1500	MBh	53.8	55.7	61.0	-	52.5	54.4	59.6	-	51.3	53.1	58.2	-	50.0	51.8	56.8	-	47.5	49.2	53.9	-	44.0	45.6	50.0	-
		S/T	0.66	0.55	0.38	-	0.68	0.57	0.39	-	0.70	0.58	0.40	-	0.72	0.60	0.42	-	0.75	0.62	0.43	-	0.75	0.63	0.44	-
		ΔT	22	19	14	-	22	19	14	-	22	19	14	-	22	19	14	-	22	19	14	-	20	18	13	-
		kW	3.97	4.05	4.18	-	4.27	4.37	4.51	-	4.54	4.64	4.80	-	4.78	4.89	5.05	-	4.99	5.10	5.27	-	5.16	5.28	5.45	-
		Amps	15.4	15.8	16.3	-	16.7	17.1	17.6	-	18.1	18.6	19.2	-	19.4	19.9	20.6	-	20.7	21.2	21.9	-	22.0	22.5	23.3	-
		HI PR	228	245	259	-	256	275	291	-	291	313	331	-	331	357	377	-	373	401	424	-	412	443	468	-
		LO PR	98	104	114	-	103	110	120	-	107	114	125	-	113	120	131	-	118	126	137	-	122	130	142	-
	1750	MBh	55.4	57.4	62.9	-	54.1	56.1	61.4	-	52.8	54.7	59.9	-	51.5	53.4	58.5	-	48.9	50.7	55.6	-	45.3	47.0	51.5	-
		S/T	0.69	0.57	0.40	-	0.71	0.60	0.41	-	0.73	0.61	0.42	-	0.75	0.63	0.44	-	0.78	0.65	0.45	-	0.79	0.66	0.46	-
		ΔT	20	17	13	-	20	18	13	-	20	18	13	-	20	18	13	-	20	17	13	-	19	16	12	-
		kW	4.00	4.09	4.21	-	4.31	4.40	4.54	-	4.58	4.68	4.84	-	4.82	4.93	5.09	-	5.03	5.14	5.31	-	5.20	5.32	5.50	-
		Amps	15.5	15.9	16.4	-	16.8	17.2	17.8	-	18.3	18.8	19.4	-	19.6	20.1	20.8	-	20.9	21.4	22.2	-	22.2	22.7	23.5	-
		HI PR	230	248	262	-	258	278	294	-	294	316	334	-	335	360	380	-	377	405	428	-	416	448	473	-
		LO PR	99	105	115	-	104	111	121	-	108	115	126	-	114	121	132	-	119	127	139	-	124	131	143	-
	2000	MBh	55.6	57.7	63.2	-	54.3	56.3	61.7	-	53.0	55.0	60.2	-	51.8	53.6	58.8	-	49.2	51.0	55.8	-	45.5	47.2	51.7	-
		S/T	0.70	0.58	0.40	-	0.72	0.60	0.42	-	0.74	0.62	0.43	-	0.77	0.64	0.44	-	0.79	0.66	0.46	-	0.80	0.67	0.46	-
		ΔT	18	15	12	-	18	16	12	-	18	16	12	-	18	16	12	-	18	16	12	-	17	15	11	-
		kW	4.03	4.12	4.25	-	4.34	4.44	4.58	-	4.62	4.72	4.88	-	4.86	4.97	5.13	-	5.07	5.18	5.36	-	5.25	5.37	5.55	-
		Amps	15.7	16.0	16.6	-	17.0	17.4	18.0	-	18.5	18.9	19.6	-	19.8	20.3	21.0	-	21.1	21.6	22.4	-	22.4	22.9	23.7	-
		HI PR	233	250	264	-	261	281	297	-	297	319	337	-	338	364	384	-	380	409	432	-	420	452	477	-
		LO PR	100	106	116	-	105	112	122	-	110	117	127	-	115	122	134	-	121	128	140	-	125	133	145	-
75	1500	MBh	54.7	56.3	60.9	65.4	53.4	55.0	59.5	63.9	52.1	53.7	58.1	62.3	50.9	**52.4**	56.7	60.8	48.3	49.7	53.8	57.8	44.7	46.1	49.9	53.5
		S/T	0.75	0.67	0.50	0.32	0.77	0.69	0.52	0.34	0.79	0.71	0.54	0.35	0.82	**0.73**	0.55	0.36	0.85	0.76	0.57	0.37	0.86	0.77	0.58	0.37
		ΔT	25	23	19	13	25	23	19	13	25	23	19	13	26	**23**	19	13	25	23	19	13	23	22	18	12
		kW	4.00	4.09	4.22	4.35	4.31	4.40	4.55	4.69	4.58	4.68	4.84	5.00	4.82	**4.93**	5.09	5.26	5.03	5.14	5.31	5.49	5.20	5.32	5.50	5.69
		Amps	15.5	15.9	16.4	17.1	16.8	17.2	17.8	18.5	18.3	18.8	19.4	20.2	19.6	**20.1**	20.8	21.6	20.9	21.4	22.2	23.0	22.2	22.7	23.5	24.4
		HI PR	230	248	262	273	258	278	294	306	294	316	334	348	335	**360**	380	397	377	405	428	446	416	448	473	493
		LO PR	99	105	115	122	104	111	121	129	108	115	126	134	114	**121**	132	141	119	127	139	148	124	131	143	153
	1750	MBh	56.3	58.0	62.7	67.3	55.0	56.6	61.3	65.8	53.7	55.3	59.8	64.2	52.4	**53.9**	58.4	62.6	49.8	51.2	55.5	59.5	46.1	47.5	51.4	55.1
		S/T	0.78	0.70	0.53	0.34	0.81	0.72	0.55	0.35	0.83	0.74	0.56	0.36	0.86	**0.77**	0.58	0.37	0.89	0.80	0.60	0.39	0.90	0.80	0.61	0.39
		ΔT	23	21	17	12	23	22	18	12	23	22	18	12	24	**22**	18	12	23	21	18	12	22	20	16	11
		kW	4.03	4.12	4.25	4.39	4.34	4.44	4.58	4.73	4.62	4.72	4.88	5.04	4.86	**4.97**	5.14	5.31	5.07	5.18	5.36	5.54	5.25	5.37	5.55	5.74
		Amps	15.7	16.1	16.6	17.2	17.0	17.4	18.0	18.7	18.5	18.9	19.6	20.3	19.8	**20.3**	21.0	21.8	21.1	21.6	22.4	23.2	22.4	22.9	23.7	24.7
		HI PR	233	250	264	276	261	281	297	309	297	320	337	352	338	**364**	384	401	380	409	432	451	420	452	478	498
		LO PR	100	106	116	123	105	112	122	130	110	117	127	136	115	**122**	134	142	121	128	140	149	125	133	145	154
	2000	MBh	56.6	58.3	63.1	67.7	55.3	56.9	61.6	66.1	53.9	55.5	60.1	64.5	52.6	**54.2**	58.7	63.0	50.0	51.5	55.7	59.8	46.3	47.7	51.6	55.4
		S/T	0.79	0.71	0.54	0.35	0.82	0.73	0.56	0.36	0.84	0.75	0.57	0.37	0.87	**0.78**	0.59	0.38	0.90	0.81	0.61	0.39	0.91	0.81	0.62	0.40
		ΔT	21	19	16	11	21	19	16	11	21	19	16	11	21	**19**	16	11	21	19	16	11	19	18	15	10
		kW	4.06	4.15	4.28	4.42	4.38	4.48	4.62	4.77	4.66	4.76	4.92	5.08	4.90	**5.01**	5.18	5.35	5.11	5.23	5.40	5.59	5.29	5.41	5.59	5.78
		Amps	15.8	16.2	16.7	17.4	17.1	17.6	18.1	18.8	18.7	19.1	19.8	20.5	20.0	**20.5**	21.2	22.0	21.3	21.8	22.6	23.5	22.6	23.2	24.0	24.9
		HI PR	235	253	267	278	264	284	300	312	300	323	341	355	341	**367**	388	405	384	413	437	455	424	457	482	503
		LO PR	101	107	117	125	106	113	124	132	111	118	129	137	116	**124**	135	144	122	130	141	151	126	134	146	156

IDB: Entering Indoor Dry Bulb Temperature

Shaded area reflects ACCA (TVA) conditions

Amps = outdoor unit amps (comp.+fan)

High and low pressures are measured at the liquid and suction service valves.

kW = Total system power

Expanded Cooling Data — ASX130611** (cont.)

			Outdoor Ambient Temperature																							
			65				75				85				95				105				115			
			Entering Indoor Wet Bulb Temperature																							
IDB	Airflow		59	63	67	71	59	63	67	71	59	63	67	71	59	63	67	71	59	63	67	71	59	63	67	71
80	1500	MBh	55.6	56.9	60.7	64.9	54.3	55.5	59.3	63.4	53.0	54.2	57.9	61.9	51.8	52.9	**56.5**	60.4	49.2	50.2	53.7	57.4	45.5	46.5	49.7	53.2
		S/T	0.82	0.77	0.62	0.47	0.85	0.80	0.65	0.48	0.87	0.82	0.66	0.50	0.90	0.84	**0.69**	0.51	0.93	0.87	0.71	0.53	0.94	0.88	0.72	0.54
		ΔT	28	27	23	19	28	27	24	19	28	27	24	19	28	27	**24**	19	28	27	23	19	26	25	22	17
		kW	4.03	4.12	4.25	4.39	4.35	4.44	4.58	4.73	4.62	4.72	4.88	5.04	4.86	4.97	**5.14**	5.31	5.07	5.18	5.36	5.54	5.25	5.37	5.55	5.74
		Amps	15.7	16.1	16.6	17.2	17.0	17.4	18.0	18.7	18.5	18.9	19.6	20.3	19.8	20.3	**21.0**	21.8	21.1	21.6	22.4	23.2	22.4	22.9	23.7	24.7
		HI PR	233	250	264	276	261	281	297	309	297	320	337	352	338	364	**384**	401	380	409	432	451	420	452	478	498
		LO PR	100	106	116	123	105	112	122	130	110	117	127	136	115	122	**134**	142	121	128	140	149	125	133	145	154
	1750	MBh	57.3	58.6	62.6	66.9	56.0	57.2	61.1	65.3	54.6	55.8	59.6	63.8	53.3	54.5	58.2	62.2	50.6	51.7	55.3	59.1	46.9	47.9	51.2	54.7
		S/T	0.86	0.80	0.65	0.49	0.89	0.83	0.68	0.51	0.91	0.85	0.70	0.52	0.94	0.88	0.72	0.54	1.00	0.92	0.75	0.56	1.00	0.92	0.75	0.56
		ΔT	26	25	22	17	26	25	22	17	26	25	22	17	26	25	22	18	27	25	22	17	25	23	20	16
		kW	4.07	4.15	4.28	4.42	4.38	4.48	4.62	4.77	4.66	4.76	4.92	5.08	4.90	5.01	5.18	5.35	5.11	5.23	5.40	5.59	5.29	5.41	5.59	5.79
		Amps	15.8	16.2	16.7	17.4	17.1	17.6	18.2	18.9	18.7	19.1	19.8	20.5	20.0	20.5	21.2	22.0	21.3	21.8	22.6	23.5	22.6	23.2	24.0	24.9
		HI PR	235	253	267	279	264	284	300	313	300	323	341	355	342	368	388	405	384	414	437	455	425	457	482	503
		LO PR	101	107	117	125	107	113	124	132	111	118	129	137	116	124	135	144	122	130	142	151	126	134	146	156
	2000	MBh	57.6	58.8	62.9	67.2	56.2	57.5	61.4	65.6	54.9	56.1	59.9	64.1	53.6	54.7	58.5	62.5	50.9	52.0	55.6	59.4	47.1	48.2	51.5	55.0
		S/T	0.87	0.82	0.66	0.50	0.90	0.85	0.69	0.51	0.92	0.87	0.71	0.53	0.95	0.89	0.73	0.54	1.00	0.93	0.76	0.56	1.00	0.94	0.76	0.57
		ΔT	23	22	19	15	23	22	19	16	23	22	19	16	23	23	20	16	23	22	19	15	22	21	18	14
		kW	4.10	4.19	4.32	4.46	4.42	4.51	4.66	4.81	4.70	4.80	4.96	5.12	4.94	5.06	5.22	5.40	5.16	5.27	5.45	5.63	5.34	5.46	5.64	5.84
		Amps	16.0	16.4	16.9	17.6	17.3	17.7	18.3	19.0	18.8	19.3	20.0	20.7	20.2	20.7	21.4	22.2	21.5	22.0	22.8	23.7	22.8	23.4	24.2	25.1
		HI PR	237	255	270	281	266	287	303	316	303	326	344	359	345	371	392	409	388	418	441	460	429	461	487	508
		LO PR	102	108	118	126	108	114	125	133	112	119	130	138	117	125	136	145	123	131	143	152	127	135	148	157
85	1500	MBh	56.6	57.7	60.4	64.5	55.3	56.4	59.0	63.0	54.0	55.0	57.6	61.5	52.7	53.7	56.2	60.0	50.0	51.0	53.4	57.0	46.3	47.2	49.5	52.8
		S/T	0.86	0.83	0.75	0.61	0.89	0.86	0.77	0.63	0.91	0.88	0.79	0.64	0.94	0.91	0.82	0.66	0.98	0.94	0.85	0.69	0.98	0.95	0.86	0.70
		ΔT	30	29	28	24	30	30	28	24	30	30	28	24	30	30	28	24	30	29	28	24	28	28	26	23
		kW	4.07	4.15	4.28	4.42	4.38	4.48	4.62	4.77	4.66	4.76	4.92	5.08	4.90	5.01	5.18	5.35	5.11	5.23	5.40	5.59	5.29	5.41	5.59	5.79
		Amps	15.8	16.2	16.7	17.4	17.1	17.6	18.2	18.9	18.7	19.1	19.8	20.5	20.0	20.5	21.2	22.0	21.3	21.8	22.6	23.5	22.6	23.2	24.0	24.9
		HI PR	235	253	267	279	264	284	300	313	300	323	341	355	342	368	388	405	384	414	437	455	425	457	482	503
		LO PR	101	107	117	125	107	113	124	132	111	118	129	137	116	124	135	144	122	130	142	151	126	134	146	156
	1750	MBh	58.3	59.4	62.2	66.4	56.9	58.1	60.8	64.9	55.6	56.7	59.4	63.3	54.2	55.3	57.9	61.8	51.5	52.5	55.0	58.7	47.7	48.7	51.0	54.4
		S/T	0.90	0.87	0.78	0.64	0.93	0.90	0.81	0.66	0.96	0.92	0.83	0.68	0.99	0.95	0.86	0.70	1.00	0.99	0.89	0.72	1.00	1.00	0.90	0.73
		ΔT	28	27	26	22	28	27	26	22	28	27	26	22	28	28	26	23	27	27	26	22	25	25	24	21
		kW	4.10	4.19	4.32	4.46	4.42	4.51	4.66	4.81	4.70	4.80	4.96	5.12	4.95	5.06	5.22	5.40	5.16	5.27	5.45	5.63	5.34	5.46	5.64	5.84
		Amps	16.0	16.4	16.9	17.6	17.3	17.7	18.3	19.0	18.8	19.3	20.0	20.7	20.2	20.7	21.4	22.2	21.5	22.0	22.8	23.7	22.8	23.4	24.2	25.1
		HI PR	237	255	270	281	266	287	303	316	303	326	344	359	345	371	392	409	388	418	441	460	429	461	487	508
		LO PR	102	108	118	126	108	114	125	133	112	119	130	138	117	125	136	145	123	131	143	152	127	135	148	157
	2000	MBh	58.6	59.7	62.5	66.7	57.2	58.3	61.1	65.2	55.9	56.9	59.6	63.6	54.5	55.6	58.2	62.1	51.8	52.8	55.3	59.0	48.0	48.9	51.2	54.6
		S/T	0.91	0.88	0.79	0.64	0.94	0.91	0.82	0.67	0.97	0.93	0.84	0.68	1.00	0.96	0.87	0.71	1.00	1.00	0.90	0.73	1.00	1.00	0.91	0.74
		ΔT	25	24	23	20	25	24	23	20	25	24	23	20	25	25	23	20	24	24	23	20	22	22	21	19
		kW	4.13	4.22	4.35	4.50	4.45	4.55	4.70	4.85	4.74	4.84	5.00	5.17	4.99	5.10	5.27	5.45	5.20	5.32	5.49	5.68	5.38	5.50	5.69	5.89
		Amps	16.1	16.5	17.1	17.7	17.5	17.9	18.5	19.2	19.0	19.5	20.1	20.9	20.4	20.9	21.6	22.4	21.7	22.2	23.0	23.9	23.0	23.6	24.4	25.4
		HI PR	240	258	272	284	269	289	306	319	306	329	348	363	348	375	396	413	392	422	445	465	433	466	492	513
		LO PR	103	109	119	127	109	116	126	134	113	120	131	140	119	126	138	147	124	132	144	154	129	137	149	159

IDB: Entering Indoor Dry Bulb Temperature

High and low pressures are measured at the liquid and suction service valves.

Shaded area reflects AHRI conditions

Amps = outdoor unit amps (comp.+fan)

kW = Total system power

ECN	REV	ZONE	DESCRIPTION	CHK	DR	DATE
XXXXXX	A	XXXXX	INITIAL RELEASE	-		

MODEL	DIMENSIONS		
	W"	D"	H"
ASX130181**	26"	26"	27½
ASX130241**	26"	26"	27½
ASX130301**	26"	26"	27½
ASX130361**	26"	26"	27½
ASX130421**	29"	29"	36¼
ASX130481**	29"	29"	36¼
ASX130601**	29	29	40
ASX130611**	35½	35½	38¼

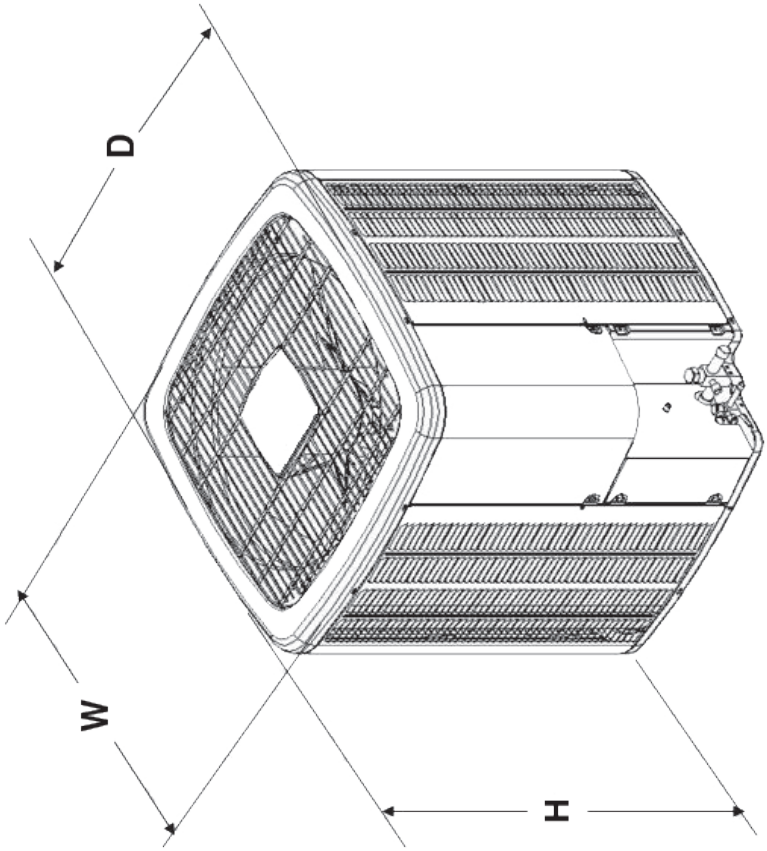

Goodman Manufacturing Company, L.P.

DRAWING TO BE INTERPRETED IN ACCORDANCE WITH ASME Y14.5M

DIMENSIONS ARE IN INCHES UNLESS OTHERWISE NOTED

TOLERANCES
ANGLES ± 1.0°
.X ± .1
.XX ± .03
.XXX ± .010
HOLE Ø ± .005
TUBE CUT LG ± .063

DWN BY: GL
CHK BY:
ENG:
DATE:

DO NOT SCALE DRAWING
SHT 1 OF 1
REV A

COMPONENTS AND MATERIALS SPECIFIED HEREIN WILL ALSO CONFORM TO THE APPLICABLE SECTION OF GOODMAN MSP 8240.01 WORKMANSHIP STANDARD FOR FIT, FEEL AND FINISH

CONFIDENTIAL PROPERTY OF THE GOODMAN MANUFACTURING COMPANY, LP. NOT TO BE DISCLOSED TO OTHERS, COPIED, OR USED FOR ANY PURPOSE EXCEPT AS AUTHORIZED IN WRITING. MUST BE RETURNED UPON DEMAND, ON COMPLETION OF ORDER, OR OTHER PURPOSE FOR WHICH IT WAS LENT.

SPECIAL CHARACTERISTICS

= 6SIGMA

= CRITICAL CHARACTERISTIC

= SIGNIFICANT CHARACTERISTIC

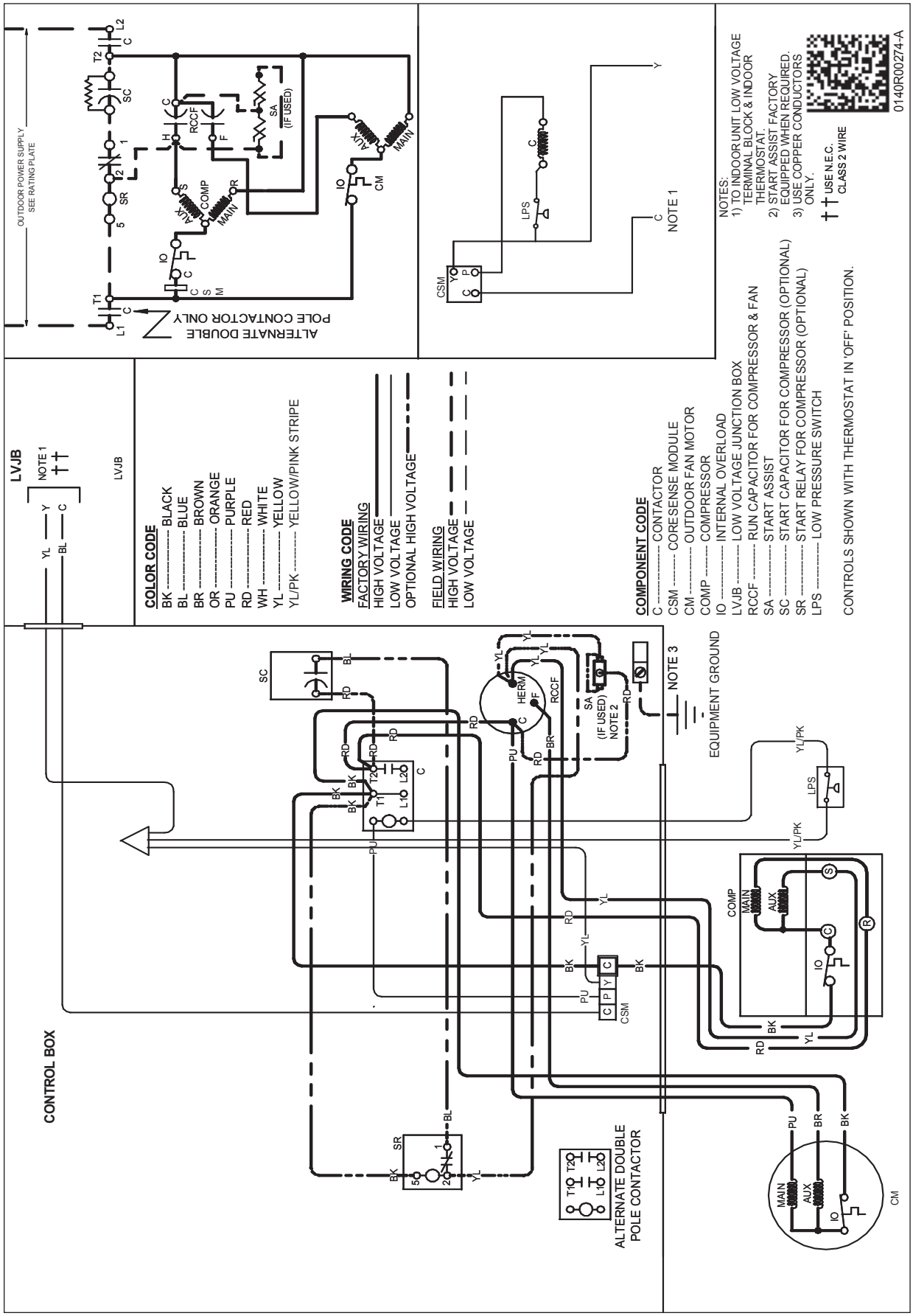

WARNING

High Voltage: Disconnect all power before servicing or installing this unit. Multiple power sources may be present. Failure to do so may cause property damage, personal injury, or death.

Wiring is subject to change. Always refer to the wiring diagram or the unit for the most up-to-date wiring.

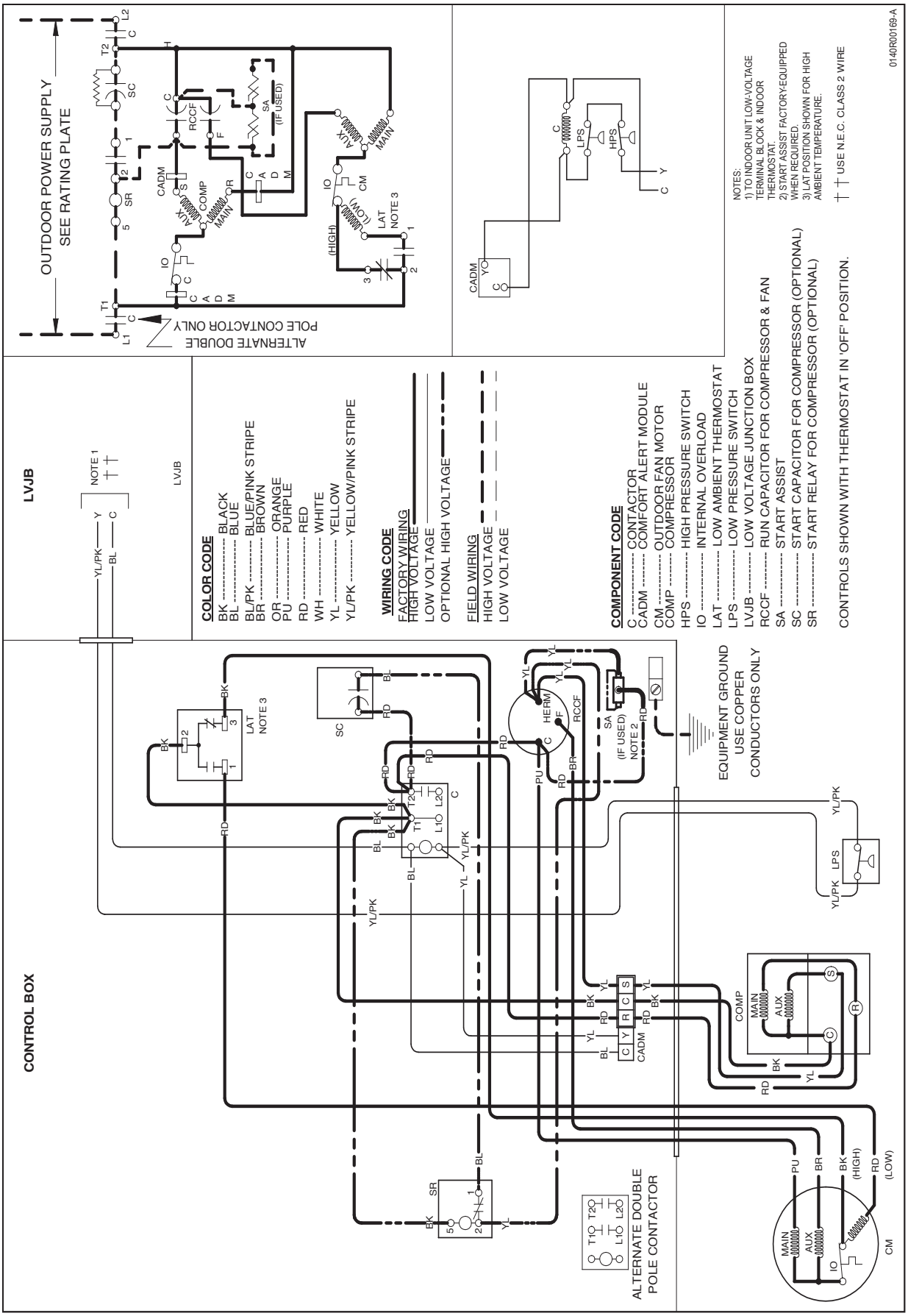

WARNING

High Voltage: Disconnect all power before servicing or installing this unit. Multiple power sources may be present. Failure to do so may cause property damage, personal injury, or death.

Wiring is subject to change. Always refer to the wiring diagram or the unit for the most up-to-date wiring.

MODEL	DESCRIPTION	ASX13 018*	ASX13 024*	ASX13 030*	ASX13 036*	ASX13 042*	ASX13 048*	ASX13 060*
ABK-20	Anchor Bracket Kit◊	X	X	X	X	X	X	X
ASC-01	Anti-Short Cycle Kit	X	X	X	X	X	X	X
CSR-U-1	Hard-start Kit	X	X	X	X	X	X	X
FSK01A[1]	Freeze Protection Kit	X	X	X	X	X	X	X
LAKT01A	Low-Ambient Kit	X	X	X	X	X	X	X
LSK01A	Liquid Line Solenoid Kit	X	X	X	X	X	X	X
OT18-60A	Outdoor Thermostat	X	X	X	X	X	X	X
TX2N4A[2]	TXV Kit	X	X					
TX3N4[2]	TXV Kit			X	X			
TX5N4[2]	TXV Kit					X	X	X

◊ Contains 20 brackets; four brackets needed to anchor unit to pad

[1] Installed on indoor coil

[2] Field-installed, non-bleed, expansion valve kit — Condensing units and heat pumps with reciprocating compressors require the use of start-assist components when used in conjunction with an indoor coil using a non-bleed thermal expansion valve refrigerant metering device or liquid line solenoid kit. The TXV should always be sized based on the tonnage of the outdoor unit.

All AHRI system ratings are accessible in the System Configurator tool via PartnerLink.

Amana® is a trademark of Maytag Corporation or its related companies and used under license to Goodman Company, L.P. All rights reserved. Our continuing commitment to quality products may mean a change in specifications without notice. ©2019 Goodman Company, L.P. • Houston, Texas • Printed in the USA.