Heating & Air Conditioning
Amana®
AMERICA'S BRAND FOR COMFORT™

APH14H

COOLING CAPACITY: 24,000 - 57,500 BTU/H
HEATING CAPACITY: 22,800 - 54,500 BTU/H

PACKAGED HEAT PUMPS
2 TO 5 TONS
UP TO 14.5 SEER

Contents

Nomenclature 2
Product Specifications 3
Expanded Cooling Data 4
Expanded Heating Data 16
Airflow Data 19
Heat Kit Electrical Data 20
Dimensions 21
Wiring Diagram 22
Accessories 23

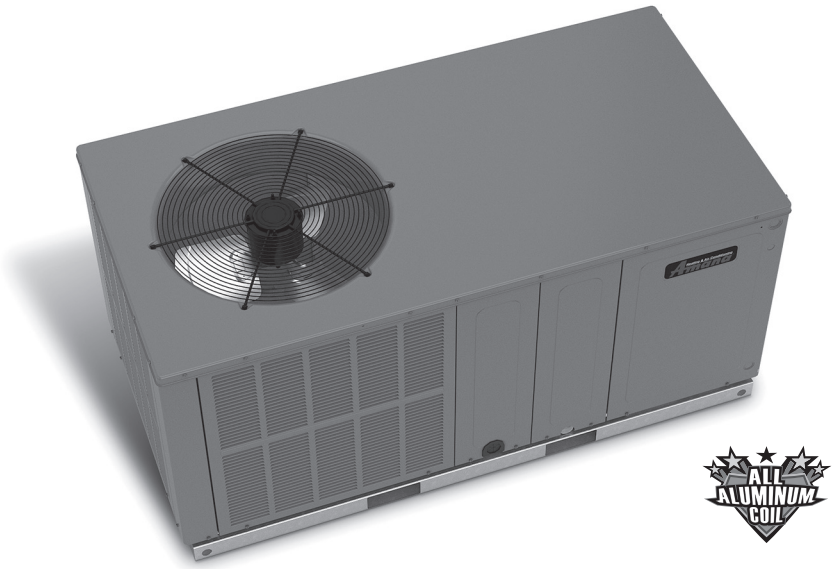

Standard Features

- Energy-efficient scroll compressor with internal relief valve
- Multi-speed ECM indoor blower motor
- Quiet horizontal discharge
- All-Aluminum evaporator coil
- Copper tube / aluminum fin condenser coil
- Compressor sound blanket
- Totally enclosed, permanently lubricated condenser fan motor
- Fully charged system
- Electric heat kit available as a field-installed option
- AHRI Certified; ETL Listed

Cabinet Features

- Heavy-gauge galvanized-steel cabinet
- Attractive Architectural Gray powder-paint finish
- Aluminum foil-facing internal insulation reinforced with fiberglass scrim
- Cabinet air leakage less than 2.0% at 1.0 inch H_2O when tested in accordance with ASHRAE standard 193
- Cabinet air leakage less than 1.4% at 0.5 inch H_2O when tested in accordance with ASHRAE standard 193
- Fully insulated blower compartment with convenient access panels
- Louvered condenser coil protection
- One footprint for all tonnages

10 YEAR PARTS LIMITED WARRANTY*
2 YEAR UNIT REPLACEMENT LIMITED WARRANTY*
C ETL LISTED US Intertek
AHRI CERTIFIED® www.ahridirectory.org Unitary Large AC AHRI Standard 340/360
COMPANY WITH QUALITY SYSTEM CERTIFIED BY DNV GL = ISO 9001 =
COMPANY WITH ENVIRONMENTAL SYSTEM CERTIFIED BY DNV GL = ISO 14001 =

* Complete warranty details available from your local dealer or at www.amana-hac.com. To receive the 2-Year Unit Replacement Limited Warranty and 10-Year Parts Limited Warranty, online registration must be completed within 60 days of installation. Online registration is not required in California or Quebec.

Amana® is a trademark of Maytag Corporation or its related companies and used under license to Goodman Company, L.P., Houston, Texas.

Supersedes 10/20

A	P	H	14	36	H	4	1	**
1	2	3	4,5	6,7	8	9	10	11,12

Brand

A Amana® brand

Product Category

P Packaged Unit

Unit Type

C Air Conditioner

H Heat Pump

Efficiency

14 14 SEER

16 16 SEER

Nominal Capacity

24 2 Tons	36 3 Tons	48 4 Tons
30 2½ tons	42 3½ Tons	60 5 Tons

Airflow

M Multi-Position

H Horizontal

Refrigerant

4 R-410A

Electrical

1 208-230/1/60

Engineering

Major/ Minor Revisions

	APH14 24H41D*	APH14 30H41D*	APH14 36H41D*	APH14 42H41E*	APH14 48H41E*	APH14 60H41F*
COOLING CAPACITY						
Cooling Capacity (BTU/h)	24,000	28,400	36,000	40,500	46,000	57,500
Sensible BTU/h	17,800	22,400	27,400	30,000	35,400	41,000
SEER / EER	14.5 / 12.0	14.0 / 12.0	14.0 / 11.5	14.0 / 12.0	14.0 / 12.0	14.0 / 12.0
Decibels	76	76	78	78	80	80
AHRI Numbers	6895321	6895322	6895323	7428916	7428918	9008584
HEATING CAPACITY						
BTU/h (47°F)	22,800	27,600	32,200	37,600	44,000	54,500
C.O.P. (47°F)	3.8	3.8	3.7	3.8	3.8	3.6
BTU/h (17°F)	13,000	15,400	20,400	21,600	26,000	33,800
C.O.P. (17°F)	2.4	2.5	2.4	2.4	2.4	2.5
HSPF	8.0	8.0	8.0	8.0	8.0	8.0
EVAPORATOR MOTOR						
Type	ECM	ECM	ECM	ECM	ECM	ECM
Wheel (D x W)	10 x 8	10 x 8	10 x 8	10 x 8	10 x 8	11X8
Cooling CFM	875	1,050	1,200	1,300	1,600	1,700
Fan-Only CFM	800	950	1,100	1,200	1,400	1,600
RLA	3.8	3.8	3.8	3.8	5.4	5.4
No. of Speeds	5	5	5	5	5	5
Horsepower- RPM	½- 1,050	½- 1,050	½- 1,050	½- 1,050	¾- 1,050	¾- 1,050
EVAPORATOR COIL						
Face Area (ft2)	5.2	5.2	6.2	6.2	6.2	7
Rows Deep/ Fins per Inch	3/ 14	3/ 14	3/ 14	4/ 14	4/ 14	4/ 14
Indoor Metering Device Size	0.061	0.065	0.068	0.074	0.074	0.086
Filter Size (ft2)	20 x 20 x 1	20 x 25 x 1	25 x 25 x 1	(2) 20x20x1	(2) 20x20x1	(2) 20x25x1
Drain Size (NPT)	¾"	¾"	¾"	¾"	¾"	¾"
Refrigerant Charge (oz.)	105	105	125	132	170	175
CONDENSER FAN / COIL						
Horsepower- RPM	1/6- 815	1/6- 815	¼- 1075	¼- 1075	¼- 1075	¼- 1075
RLA/LRA	1.1 / 1.7	1.1 / 1.7	1.6 / 3.5	1.4 / 2.9	1.4 / 2.9	1.4 / 2.9
Fan Diameter / # Fan Blades	22 / 3	22 / 3	22 / 4	22 / 4	22 / 4	22 / 4
Face Area (ft2)	13.4	13.4	17	17	17	19
Outdoor Metering Device Size	0.047	0.047	0.063	0.065	0.065	0.071
Rows Deep/ Fins per Inch	1 / 24	1 / 24	1 / 24	1 / 24	2 / 16	2 / 20
COMPRESSOR						
Quantity / Type	1 / Scroll / Single	1 / Scroll / Single	1 / Scroll / Single	1 / Scroll / Single	1 / Scroll / Single	1 / Scroll / single
Compressor RLA/LRA	12.8 / 58.3	14.1 / 73	16.7 / 79	17.9 / 112	19.9 / 109	26.4/ 134
ELECTRICAL DATA						
Voltage/Phase (60 Hz)	208-230/ 1	208-230/ 1	208-230/ 1	208-230/ 1	208-230/ 1	208-230/ 1
Indoor Blower FLA	3.8	3.8	3.8	3.8	5.4	5.4
Outdoor Fan RLA	1.1	1.1	1.6	1.4	1.4	1.4
Total Unit Amps	17.7	19	22.1	23.1	26.7	33.2
Min. Circuit Ampacity[1]	21	23	26.3	28	32	40
Min. Overcurrent Protection (amps)[2]	30	35	40	45	50	60
OPERATING WEIGHT (LBS)	315	315	375	375	400	400
SHIP WEIGHT (LBS)	324	324	387	387	412	412

[1] Wire size should be determined in accordance with National Electrical Codes. Extensive wire runs will require larger wire sizes.

[2] May use fuses or HACR-type circuit breakers of the same size as noted.

Note: Always check the S&R plate for electrical data on the unit being installed.

			Outdoor Ambient Temperature																							
			65				75				85				95				105				115			
			Entering Indoor Wet Bulb Temperature																							
IDB	Airflow		59	63	67	71	59	63	67	71	59	63	67	71	59	63	67	71	59	63	67	71	59	63	67	71
70	955	MBh	23.9	24.8	27.2	-	23.4	24.2	26.5	-	22.8	23.6	25.9	-	22.2	23.1	25.3	-	21.1	21.9	24.0	-	19.6	20.3	22.2	-
		S/T	0.75	0.62	0.43	-	0.77	0.65	0.45	-	0.79	0.66	0.46	-	0.82	0.68	0.47	-	0.85	0.71	0.49	-	0.86	0.72	0.50	-
		Δ T	17	15	11	-	17	15	11	-	17	15	11	-	18	15	12	-	17	15	11	-	16	14	11	-
		kW	1.54	1.57	1.62	-	1.66	1.70	1.75	-	1.77	1.81	1.87	-	1.86	1.91	1.97	-	1.95	1.99	2.06	-	2.02	2.06	2.13	-
		Amps	6.4	6.5	6.7	-	6.8	7.0	7.2	-	7.4	7.6	7.8	-	7.9	8.0	8.3	-	8.3	8.5	8.8	-	8.8	9.0	9.3	-
		HI PR	236	253	268	-	264	284	300	-	301	323	342	-	342	368	389	-	385	414	438	-	425	458	484	-
		LO PR	111	118	129	-	117	125	136	-	122	129	141	-	128	136	148	-	134	143	156	-	139	147	161	-
	850	MBh	23.2	24.1	26.4	-	22.7	23.5	25.7	-	22.1	22.9	25.1	-	21.6	22.4	24.5	-	20.5	21.3	23.3	-	19.0	19.7	21.6	-
		S/T	0.71	0.59	0.41	-	0.74	0.62	0.43	-	0.76	0.63	0.44	-	0.78	0.65	0.45	-	0.81	0.68	0.47	-	0.82	0.68	0.47	-
		Δ T	18	15	12	-	18	16	12	-	18	16	12	-	18	16	12	-	18	16	12	-	17	15	11	-
		kW	1.52	1.56	1.61	-	1.65	1.68	1.74	-	1.75	1.79	1.85	-	1.85	1.89	1.96	-	1.93	1.97	2.04	-	2.00	2.05	2.12	-
		Amps	6.3	6.5	6.6	-	6.8	6.9	7.1	-	7.3	7.5	7.7	-	7.8	8.0	8.2	-	8.3	8.5	8.7	-	8.7	8.9	9.2	-
		HI PR	233	251	265	-	262	282	297	-	298	320	338	-	339	365	385	-	381	410	433	-	421	453	479	-
		LO PR	110	117	127	-	116	123	135	-	120	128	140	-	127	135	147	-	133	141	154	-	137	146	159	-
	745	MBh	21.4	22.2	24.3	-	20.9	21.7	23.8	-	20.4	21.2	23.2	-	19.9	20.7	22.6	-	18.9	19.6	21.5	-	17.5	18.2	19.9	-
		S/T	0.69	0.57	0.40	-	0.71	0.59	0.41	-	0.73	0.61	0.42	-	0.75	0.63	0.44	-	0.78	0.65	0.45	-	0.79	0.66	0.46	-
		Δ T	18	16	12	-	18	16	12	-	18	16	12	-	19	16	12	-	18	16	12	-	17	15	11	-
		kW	1.49	1.52	1.57	-	1.60	1.64	1.69	-	1.71	1.75	1.81	-	1.80	1.84	1.90	-	1.88	1.92	1.99	-	1.95	1.99	2.06	-
		Amps	6.2	6.3	6.5	-	6.6	6.8	7.0	-	7.1	7.3	7.5	-	7.6	7.8	8.0	-	8.1	8.2	8.5	-	8.5	8.7	9.0	-
		HI PR	226	243	257	-	254	273	288	-	289	311	328	-	329	354	374	-	370	398	420	-	409	440	464	-
		LO PR	106	113	124	-	112	120	131	-	117	124	136	-	123	131	143	-	129	137	149	-	133	142	155	-
75	955	MBh	24.3	25.0	27.1	29.1	23.7	24.5	26.5	28.4	23.2	23.9	25.8	27.7	22.6	23.3	25.2	27.1	21.5	22.1	23.9	25.7	19.9	20.5	22.2	23.8
		S/T	0.85	0.76	0.57	0.37	0.88	0.79	0.60	0.38	0.90	0.81	0.61	0.39	0.93	0.83	0.63	0.41	0.97	0.86	0.65	0.42	0.97	0.87	0.66	0.42
		Δ T	20	18	15	10	20	19	15	10	20	19	15	10	20	19	15	11	20	18	15	10	19	17	14	10
		kW	1.55	1.58	1.64	1.69	1.67	1.71	1.77	1.83	1.78	1.82	1.89	1.95	1.88	1.92	1.99	2.06	1.96	2.01	2.08	2.15	2.03	2.08	2.15	2.23
		Amps	6.4	6.6	6.8	7.0	6.9	7.1	7.3	7.5	7.5	7.6	7.9	8.1	7.9	8.1	8.4	8.7	8.4	8.6	8.9	9.2	8.9	9.1	9.4	9.7
		HI PR	238	256	270	282	267	287	303	316	304	327	345	360	346	372	393	410	389	419	442	461	430	463	488	509
		LO PR	112	119	130	138	118	126	137	146	123	131	143	152	129	137	150	160	135	144	157	167	140	149	163	173
	850	MBh	23.6	24.3	26.3	28.2	23.1	23.7	25.7	27.6	22.5	23.2	25.1	26.9	22.0	**22.6**	24.5	26.3	20.9	21.5	23.2	25.0	19.3	19.9	21.5	23.1
		S/T	0.81	0.72	0.55	0.35	0.84	0.75	0.57	0.37	0.86	0.77	0.58	0.37	0.89	**0.79**	0.60	0.39	0.92	0.82	0.62	0.40	0.93	0.83	0.63	0.40
		Δ T	21	19	16	11	21	19	16	11	21	19	16	11	21	**19**	16	11	21	19	16	11	19	18	15	10
		kW	1.54	1.57	1.62	1.68	1.66	1.70	1.75	1.81	1.77	1.81	1.87	1.93	1.86	**1.91**	1.97	2.04	1.95	1.99	2.06	2.13	2.02	2.06	2.13	2.21
		Amps	6.4	6.5	6.7	6.9	6.8	7.0	7.2	7.5	7.4	7.6	7.8	8.1	7.9	**8.0**	8.3	8.6	8.3	8.5	8.8	9.1	8.8	9.0	9.3	9.6
		HI PR	236	253	268	279	264	284	300	313	301	323	342	356	342	**368**	389	406	385	415	438	457	426	458	484	504
		LO PR	111	118	129	137	117	125	136	145	122	129	141	151	128	**136**	149	158	134	143	156	166	139	147	161	171
	745	MBh	21.8	22.4	24.3	26.1	21.3	21.9	23.7	25.5	20.8	21.4	23.2	24.8	20.3	20.9	22.6	24.2	19.3	19.8	21.5	23.0	17.8	18.4	19.9	21.3
		S/T	0.78	0.70	0.53	0.34	0.81	0.72	0.55	0.35	0.83	0.74	0.56	0.36	0.86	0.77	0.58	0.37	0.89	0.80	0.60	0.39	0.90	0.80	0.61	0.39
		Δ T	21	19	16	11	21	20	16	11	21	20	16	11	21	20	16	11	21	19	16	11	20	18	15	10
		kW	1.50	1.53	1.58	1.63	1.62	1.65	1.71	1.77	1.72	1.76	1.82	1.88	1.82	1.86	1.92	1.99	1.90	1.94	2.01	2.08	1.96	2.01	2.08	2.15
		Amps	6.2	6.3	6.5	6.8	6.7	6.8	7.0	7.3	7.2	7.4	7.6	7.9	7.7	7.8	8.1	8.4	8.1	8.3	8.6	8.9	8.6	8.8	9.1	9.4
		HI PR	228	246	260	271	256	276	291	304	292	314	331	346	332	357	377	394	374	402	425	443	413	444	469	489
		LO PR	108	114	125	133	114	121	132	141	118	126	137	146	124	132	144	153	130	138	151	161	134	143	156	166

IDB = Entering Indoor Dry Bulb Temperature

Shaded area reflects ACCA (TVA) conditions

KW = Total system power

High and low pressures are measured at the liquid and suction access fittings.

Amps: Unit amps (comp.+ evaporator + condenser fan motors)

Expanded Cooling Data — APH1424H41** (cont.)

			Outdoor Ambient Temperature																							
			65				75				85				95				105				115			
			Entering Indoor Wet Bulb Temperature																							
IDB	Airflow		59	63	67	71	59	63	67	71	59	63	67	71	59	63	67	71	59	63	67	71	59	63	67	71
80	955	MBh	24.7	25.3	27.0	28.9	24.2	24.7	26.4	28.2	23.6	24.1	25.8	27.5	23.0	23.5	25.1	26.9	21.9	22.3	23.9	25.5	20.3	20.7	22.1	23.6
		S/T	0.93	0.87	0.71	0.53	0.96	0.90	0.74	0.55	1.00	0.93	0.76	0.56	1.00	0.96	0.78	0.58	1.00	1.00	0.81	0.60	1.00	1.00	0.82	0.61
		Δ T	22	21	18	15	22	22	19	15	23	22	19	15	22	22	19	15	21	22	19	15	19	20	17	14
		kW	1.56	1.60	1.65	1.71	1.69	1.73	1.78	1.84	1.80	1.84	1.90	1.97	1.90	1.94	2.01	2.08	1.98	2.03	2.10	2.17	2.05	2.10	2.17	2.25
		Amps	6.5	6.6	6.8	7.1	7.0	7.1	7.3	7.6	7.5	7.7	7.9	8.2	8.0	8.2	8.4	8.7	8.5	8.7	9.0	9.3	9.0	9.2	9.5	9.8
		HI PR	240	259	273	285	270	290	306	320	307	330	349	363	349	376	397	414	393	423	447	466	434	467	493	515
		LO PR	113	120	131	140	119	127	139	148	124	132	144	154	130	139	152	161	137	145	159	169	141	150	164	175
	850	MBh	24.0	24.6	26.2	28.0	23.5	24.0	25.6	27.4	22.9	23.4	25.0	26.7	22.4	22.8	**24.4**	26.1	21.2	21.7	23.2	24.8	19.7	20.1	21.5	23.0
		S/T	0.89	0.83	0.68	0.51	0.92	0.86	0.70	0.53	0.94	0.89	0.72	0.54	0.97	0.91	**0.74**	0.56	1.00	0.95	0.77	0.58	1.00	0.96	0.78	0.58
		Δ T	23	22	19	15	23	22	19	16	23	22	19	16	24	23	**20**	16	23	22	19	15	21	21	18	14
		kW	1.55	1.58	1.64	1.69	1.67	1.71	1.77	1.83	1.78	1.82	1.89	1.95	1.88	1.92	**1.99**	2.06	1.96	2.01	2.08	2.15	2.03	2.08	2.15	2.23
		Amps	6.4	6.6	6.8	7.0	6.9	7.1	7.3	7.5	7.5	7.6	7.9	8.1	7.9	8.1	**8.4**	8.7	8.4	8.6	8.9	9.2	8.9	9.1	9.4	9.7
		HI PR	238	256	270	282	267	287	303	316	304	327	345	360	346	372	**393**	410	389	419	442	461	430	463	488	510
		LO PR	112	119	130	139	118	126	137	146	123	131	143	152	129	137	**150**	160	135	144	157	167	140	149	163	173
	745	MBh	22.2	22.7	24.2	25.9	21.7	22.1	23.6	25.3	21.1	21.6	23.1	24.7	20.6	21.1	22.5	24.1	19.6	20.0	21.4	22.9	18.2	18.6	19.8	21.2
		S/T	0.86	0.80	0.65	0.49	0.89	0.83	0.68	0.51	0.91	0.85	0.69	0.52	0.94	0.88	0.72	0.54	0.97	0.91	0.74	0.56	0.98	0.92	0.75	0.56
		Δ T	23	22	20	16	24	23	20	16	24	23	20	16	24	23	20	16	24	23	20	16	22	21	18	15
		kW	1.51	1.54	1.60	1.65	1.63	1.67	1.72	1.78	1.74	1.78	1.84	1.90	1.83	1.87	1.94	2.00	1.91	1.96	2.02	2.09	1.98	2.03	2.10	2.17
		Amps	6.3	6.4	6.6	6.8	6.7	6.9	7.1	7.3	7.3	7.4	7.7	7.9	7.7	7.9	8.2	8.4	8.2	8.4	8.6	9.0	8.7	8.9	9.1	9.5
		HI PR	231	248	262	274	259	279	294	307	295	317	335	349	335	361	381	398	377	406	429	447	417	449	474	494
		LO PR	109	116	126	134	115	122	133	142	119	127	139	148	125	133	146	155	131	140	152	162	136	144	158	168
85	955	MBh	25.2	25.7	26.9	28.7	24.6	25.1	26.3	28.0	24.0	24.5	25.6	27.3	23.4	23.9	25.0	26.7	22.3	22.7	23.8	25.3	20.6	21.0	22.0	23.5
		S/T	0.98	0.94	0.85	0.69	1.00	0.98	0.88	0.71	1.00	1.00	0.90	0.73	1.00	1.00	0.93	0.76	1.00	1.00	0.97	0.79	1.00	1.00	0.98	0.79
		Δ T	24	23	22	19	24	24	22	19	23	24	22	19	23	23	22	19	21	22	22	19	20	20	21	18
		kW	1.58	1.61	1.66	1.72	1.70	1.74	1.80	1.86	1.81	1.86	1.92	1.98	1.91	1.96	2.02	2.09	2.00	2.04	2.11	2.19	2.07	2.12	2.19	2.27
		Amps	6.5	6.7	6.9	7.1	7.0	7.2	7.4	7.7	7.6	7.8	8.0	8.3	8.1	8.3	8.5	8.8	8.6	8.8	9.0	9.4	9.0	9.3	9.5	9.9
		HI PR	243	261	276	288	272	293	309	323	310	333	352	367	353	380	401	418	397	427	451	470	439	472	498	520
		LO PR	114	122	133	141	121	128	140	149	125	133	146	155	132	140	153	163	138	147	160	171	143	152	166	177
	850	MBh	24.4	24.9	26.1	27.8	23.9	24.3	25.5	27.2	23.3	23.8	24.9	26.5	22.7	23.2	24.3	25.9	21.6	22.0	23.1	24.6	20.0	20.4	21.4	22.8
		S/T	0.93	0.90	0.81	0.66	0.96	0.93	0.84	0.68	0.99	0.95	0.86	0.70	1.00	0.99	0.89	0.72	1.00	1.00	0.92	0.75	1.00	1.00	0.93	0.76
		Δ T	25	24	23	20	25	25	23	20	25	25	23	20	25	25	23	20	23	24	23	20	22	22	22	19
		kW	1.56	1.60	1.65	1.71	1.69	1.73	1.78	1.84	1.80	1.84	1.90	1.97	1.90	1.94	2.01	2.08	1.98	2.03	2.10	2.17	2.05	2.10	2.17	2.25
		Amps	6.5	6.6	6.8	7.1	7.0	7.1	7.3	7.6	7.5	7.7	7.9	8.2	8.0	8.2	8.4	8.7	8.5	8.7	9.0	9.3	9.0	9.2	9.5	9.8
		HI PR	240	259	273	285	270	290	306	320	307	330	349	363	349	376	397	414	393	423	447	466	434	467	493	515
		LO PR	113	120	131	140	119	127	139	148	124	132	144	154	130	139	152	161	137	145	159	169	141	150	164	175
	745	MBh	22.6	23.0	24.1	25.7	22.0	22.5	23.5	25.1	21.5	21.9	23.0	24.5	21.0	21.4	22.4	23.9	19.9	20.3	21.3	22.7	18.5	18.8	19.7	21.0
		S/T	0.90	0.87	0.78	0.63	0.93	0.90	0.81	0.66	0.95	0.92	0.83	0.67	0.98	0.95	0.86	0.70	1.00	0.99	0.89	0.72	1.00	0.99	0.90	0.73
		Δ T	25	25	23	20	25	25	24	20	25	25	24	20	26	25	24	21	25	25	23	20	23	23	22	19
		kW	1.52	1.56	1.61	1.66	1.65	1.68	1.74	1.80	1.75	1.79	1.85	1.92	1.85	1.89	1.95	2.02	1.93	1.97	2.04	2.11	2.00	2.04	2.11	2.19
		Amps	6.3	6.5	6.6	6.9	6.8	6.9	7.1	7.4	7.3	7.5	7.7	8.0	7.8	8.0	8.2	8.5	8.3	8.5	8.7	9.0	8.7	8.9	9.2	9.5
		HI PR	233	251	265	276	262	281	297	310	297	320	338	353	339	365	385	402	381	410	433	452	421	453	479	499
		LO PR	110	117	127	136	116	123	135	143	120	128	140	149	127	135	147	157	133	141	154	164	137	146	159	170

IDB = Entering Indoor Dry Bulb Temperature

High and low pressures are measured at the liquid and suction access fittings.

Shaded area reflects AHRI (TVA) conditions

KW = Total system power

Amps: Unit amps (comp.+ evaporator + condenser fan motors)

			Outdoor Ambient Temperature																							
			65				75				85				95				105				115			
			Entering Indoor Wet Bulb Temperature																							
IDB	Airflow		59	63	67	71	59	63	67	71	59	63	67	71	59	63	67	71	59	63	67	71	59	63	67	71
70	1180	MBh	29.0	30.1	32.9	-	28.3	29.4	32.2	-	27.7	28.7	31.4	-	27.0	28.0	30.6	-	25.6	26.6	29.1	-	23.7	24.6	27.0	-
		S/T	0.80	0.67	0.46	-	0.83	0.69	0.48	-	0.85	0.71	0.49	-	0.87	0.73	0.51	-	0.91	0.76	0.53	-	0.92	0.76	0.53	-
		Δ T	18	16	12	-	18	16	12	-	18	16	12	-	18	16	12	-	18	16	12	-	17	15	11	-
		kW	1.88	1.92	1.98	-	2.03	2.07	2.14	-	2.16	2.21	2.28	-	2.27	2.32	2.40	-	2.37	2.42	2.51	-	2.46	2.51	2.60	-
		Amps	7.8	8.0	8.2	-	8.4	8.6	8.8	-	9.1	9.3	9.6	-	9.6	9.9	10.2	-	10.2	10.5	10.8	-	10.8	11.0	11.4	-
		HI PR	242	261	275	-	272	292	309	-	309	332	351	-	352	379	400	-	396	426	450	-	437	471	497	-
		LO PR	116	123	135	-	123	130	142	-	127	136	148	-	134	142	155	-	140	149	163	-	145	154	168	-
	1050	MBh	28.2	29.2	32.0	-	27.5	28.5	31.2	-	26.9	27.8	30.5	-	26.2	27.2	29.7	-	24.9	25.8	28.3	-	23.1	23.9	26.2	-
		S/T	0.76	0.63	0.44	-	0.79	0.66	0.46	-	0.81	0.67	0.47	-	0.83	0.70	0.48	-	0.87	0.72	0.50	-	0.87	0.73	0.50	-
		Δ T	19	16	12	-	19	16	12	-	19	16	12	-	19	17	13	-	19	16	12	-	18	15	12	-
		kW	1.87	1.91	1.97	-	2.01	2.06	2.12	-	2.14	2.19	2.26	-	2.25	2.30	2.38	-	2.35	2.40	2.48	-	2.43	2.49	2.57	-
		Amps	7.8	7.9	8.2	-	8.3	8.5	8.8	-	9.0	9.2	9.5	-	9.6	9.8	10.1	-	10.1	10.4	10.7	-	10.7	10.9	11.3	-
		HI PR	240	258	272	-	269	289	306	-	306	329	348	-	348	375	396	-	392	422	445	-	433	466	492	-
		LO PR	115	122	133	-	121	129	141	-	126	134	146	-	132	141	154	-	139	148	161	-	144	153	167	-
	920	MBh	26.0	26.9	29.5	-	25.4	26.3	28.8	-	24.8	25.7	28.1	-	24.2	25.1	27.5	-	23.0	23.8	26.1	-	21.3	22.1	24.2	-
		S/T	0.73	0.61	0.42	-	0.76	0.63	0.44	-	0.78	0.65	0.45	-	0.80	0.67	0.47	-	0.83	0.70	0.48	-	0.84	0.70	0.49	-
		Δ T	19	16	13	-	19	17	13	-	19	17	13	-	19	17	13	-	19	17	13	-	18	15	12	-
		kW	1.82	1.86	1.92	-	1.96	2.00	2.07	-	2.09	2.13	2.20	-	2.20	2.25	2.32	-	2.29	2.34	2.42	-	2.37	2.43	2.51	-
		Amps	7.6	7.7	8.0	-	8.1	8.3	8.6	-	8.8	9.0	9.2	-	9.3	9.5	9.8	-	9.9	10.1	10.4	-	10.4	10.7	11.0	-
		HI PR	233	250	264	-	261	281	296	-	297	319	337	-	338	364	384	-	380	409	432	-	420	452	477	-
		LO PR	111	119	129	-	118	125	137	-	122	130	142	-	128	137	149	-	135	143	156	-	139	148	162	-
75	1180	MBh	29.5	30.4	32.9	35.3	28.8	29.7	32.1	34.5	28.1	29.0	31.3	33.6	27.4	28.3	30.6	32.8	26.1	26.8	29.1	31.2	24.1	24.9	26.9	28.9
		S/T	0.91	0.81	0.61	0.39	0.94	0.84	0.64	0.41	0.96	0.86	0.65	0.42	0.99	0.89	0.67	0.43	1.00	0.92	0.70	0.45	1.00	0.93	0.70	0.45
		Δ T	21	19	16	11	21	19	16	11	21	19	16	11	21	20	16	11	20	19	16	11	19	18	15	10
		kW	1.90	1.94	2.00	2.07	2.05	2.09	2.16	2.23	2.18	2.23	2.30	2.38	2.29	2.34	2.42	2.51	2.39	2.45	2.53	2.61	2.48	2.53	2.62	2.71
		Amps	7.9	8.1	8.3	8.6	8.5	8.7	8.9	9.2	9.1	9.4	9.6	10.0	9.7	9.9	10.3	10.6	10.3	10.5	10.9	11.3	10.9	11.1	11.5	11.9
		HI PR	245	263	278	290	274	295	312	325	312	336	355	370	355	383	404	421	400	430	454	474	442	476	502	524
		LO PR	117	125	136	145	124	132	144	153	129	137	149	159	135	144	157	167	142	151	165	175	147	156	170	181
	1050	MBh	28.6	29.5	31.9	34.3	28.0	28.8	31.2	33.5	27.3	28.1	30.4	32.7	26.6	**27.4**	29.7	31.9	25.3	26.1	28.2	30.3	23.4	24.1	26.1	28.0
		S/T	0.86	0.77	0.58	0.38	0.90	0.80	0.61	0.39	0.92	0.82	0.62	0.40	0.95	**0.85**	0.64	0.41	0.98	0.88	0.67	0.43	0.99	0.89	0.67	0.43
		Δ T	22	20	16	11	22	20	17	11	22	20	17	11	22	**20**	17	12	22	20	16	11	20	19	15	11
		kW	1.88	1.92	1.98	2.05	2.03	2.07	2.14	2.21	2.16	2.21	2.28	2.36	2.27	**2.32**	2.40	2.48	2.37	2.42	2.51	2.59	2.46	2.51	2.60	2.69
		Amps	7.8	8.0	8.2	8.5	8.4	8.6	8.9	9.2	9.1	9.3	9.6	9.9	9.6	**9.9**	10.2	10.5	10.2	10.5	10.8	11.2	10.8	11.0	11.4	11.8
		HI PR	242	261	275	287	272	292	309	322	309	333	351	366	352	**379**	400	417	396	426	450	469	437	471	497	519
		LO PR	116	123	135	144	123	130	142	152	127	136	148	158	134	**142**	155	166	140	149	163	173	145	154	168	179
	920	MBh	26.4	27.2	29.5	31.6	25.8	26.6	28.8	30.9	25.2	25.9	28.1	30.1	24.6	25.3	27.4	29.4	23.4	24.1	26.0	27.9	21.6	22.3	24.1	25.9
		S/T	0.83	0.75	0.56	0.36	0.86	0.77	0.58	0.38	0.89	0.79	0.60	0.39	0.91	0.82	0.62	0.40	0.95	0.85	0.64	0.41	0.96	0.86	0.65	0.42
		Δ T	22	20	17	11	22	21	17	12	22	21	17	12	22	21	17	12	22	20	17	12	21	19	16	11
		kW	1.84	1.87	1.93	2.00	1.98	2.02	2.09	2.16	2.10	2.15	2.22	2.30	2.22	2.27	2.34	2.42	2.31	2.36	2.44	2.53	2.39	2.45	2.53	2.62
		Amps	7.6	7.8	8.0	8.3	8.2	8.4	8.6	8.9	8.8	9.0	9.3	9.6	9.4	9.6	9.9	10.3	10.0	10.2	10.5	10.9	10.5	10.8	11.1	11.5
		HI PR	235	253	267	278	264	284	300	312	300	323	341	355	341	367	388	405	384	413	436	455	424	457	482	503
		LO PR	113	120	131	139	119	127	138	147	124	131	144	153	130	138	151	161	136	145	158	168	141	150	163	174

IDB = Entering Indoor Dry Bulb Temperature

High and low pressures are measured at the liquid and suction access fittings.

Shaded area reflects ACCA (TVA) conditions

KW = Total system power

Amps: Unit amps (comp.+ evaporator + condenser fan motors)

Expanded Cooling Data — APH1430H41** (cont.)

			Outdoor Ambient Temperature																							
			65				75				85				95				105				115			
			Entering Indoor Wet Bulb Temperature																							
IDB	Airflow		59	63	67	71	59	63	67	71	59	63	67	71	59	63	67	71	59	63	67	71	59	63	67	71
80	1180	MBh	30.0	30.7	32.8	35.0	29.3	30.0	32.0	34.2	28.6	29.3	31.3	33.4	27.9	28.5	30.5	32.6	26.5	27.1	29.0	31.0	24.6	25.1	26.8	28.7
		S/T	1.00	0.93	0.76	0.57	1.00	0.97	0.79	0.59	1.00	1.00	0.81	0.60	1.00	1.00	0.83	0.62	1.00	1.00	0.86	0.65	1.00	1.00	0.87	0.65
		Δ T	23	22	19	15	23	23	20	16	22	23	20	16	22	22	20	16	21	21	19	16	19	20	18	15
		kW	1.91	1.95	2.02	2.08	2.06	2.11	2.18	2.25	2.19	2.24	2.32	2.40	2.31	2.36	2.44	2.53	2.41	2.47	2.55	2.64	2.50	2.56	2.64	2.73
		Amps	8.0	8.1	8.4	8.7	8.5	8.7	9.0	9.3	9.2	9.4	9.7	10.1	9.8	10.0	10.3	10.7	10.4	10.6	11.0	11.4	11.0	11.2	11.6	12.0
		HI PR	247	266	281	293	277	298	315	329	315	339	358	374	359	386	408	426	404	435	459	479	446	480	507	529
		LO PR	118	126	137	146	125	133	145	155	130	138	151	161	137	145	159	169	143	152	166	177	148	157	172	183
	1050	MBh	29.1	29.8	31.8	34.0	28.5	29.1	31.1	33.2	27.8	28.4	30.3	32.4	27.1	27.7	**29.6**	31.6	25.8	26.3	28.1	30.1	23.9	24.4	26.0	27.8
		S/T	0.95	0.89	0.72	0.54	0.98	0.92	0.75	0.56	1.00	0.94	0.77	0.57	1.00	0.98	**0.79**	0.59	1.00	1.00	0.82	0.62	1.00	1.00	0.83	0.62
		Δ T	24	23	20	16	24	23	20	16	24	23	20	16	24	24	**21**	16	23	23	20	16	21	21	19	15
		kW	1.90	1.94	2.00	2.07	2.05	2.09	2.16	2.23	2.18	2.23	2.30	2.38	2.29	2.34	**2.42**	2.51	2.39	2.45	2.53	2.62	2.48	2.53	2.62	2.71
		Amps	7.9	8.1	8.3	8.6	8.5	8.7	8.9	9.2	9.1	9.4	9.6	10.0	9.7	10.0	**10.3**	10.6	10.3	10.5	10.9	11.3	10.9	11.1	11.5	11.9
		HI PR	245	263	278	290	274	295	312	325	312	336	355	370	356	383	**404**	421	400	430	455	474	442	476	502	524
		LO PR	117	125	136	145	124	132	144	153	129	137	149	159	135	144	**157**	167	142	151	165	175	147	156	170	181
	920	MBh	26.9	27.5	29.4	31.4	26.3	26.9	28.7	30.7	25.7	26.2	28.0	29.9	25.0	25.6	27.3	29.2	23.8	24.3	26.0	27.7	22.0	22.5	24.0	25.7
		S/T	0.91	0.86	0.70	0.52	0.95	0.89	0.72	0.54	0.97	0.91	0.74	0.55	1.00	0.94	0.77	0.57	1.04	0.98	0.79	0.59	1.05	0.98	0.80	0.60
		Δ T	25	24	20	16	25	24	21	17	25	24	21	17	25	24	21	17	25	24	21	16	23	22	19	15
		kW	1.85	1.89	1.95	2.01	1.99	2.04	2.10	2.17	2.12	2.17	2.24	2.32	2.23	2.28	2.36	2.44	2.33	2.38	2.46	2.55	2.41	2.47	2.55	2.64
		Amps	7.7	7.9	8.1	8.4	8.3	8.4	8.7	9.0	8.9	9.1	9.4	9.7	9.5	9.7	10.0	10.3	10.0	10.3	10.6	11.0	10.6	10.8	11.2	11.6
		HI PR	237	255	270	281	266	286	303	316	303	326	344	359	345	371	392	409	388	417	441	460	429	461	487	508
		LO PR	114	121	132	141	120	128	139	149	125	133	145	154	131	139	152	162	137	146	160	170	142	151	165	176
85	1180	MBh	30.5	31.1	32.6	34.8	29.8	30.4	31.9	34.0	29.1	29.7	31.1	33.2	28.4	29.0	30.3	32.4	27.0	27.5	28.8	30.7	25.0	25.5	26.7	28.5
		S/T	1.00	1.00	0.91	0.74	1.00	1.00	0.94	0.76	1.00	1.00	0.96	0.78	1.00	1.00	1.00	0.81	1.00	1.00	1.00	0.84	1.00	1.00	1.00	0.85
		Δ T	24	24	23	20	23	24	23	20	23	23	23	20	22	23	24	20	21	21	22	20	19	20	21	19
		kW	1.93	1.97	2.03	2.10	2.08	2.13	2.19	2.27	2.21	2.26	2.34	2.42	2.33	2.38	2.46	2.55	2.43	2.49	2.57	2.66	2.52	2.58	2.66	2.76
		Amps	8.0	8.2	8.4	8.7	8.6	8.8	9.1	9.4	9.3	9.5	9.8	10.2	9.9	10.1	10.4	10.8	10.5	10.7	11.1	11.5	11.1	11.3	11.7	12.1
		HI PR	250	269	284	296	280	301	318	332	318	343	362	377	363	390	412	430	408	439	464	484	451	485	512	534
		LO PR	120	127	139	148	126	134	147	156	131	140	152	162	138	147	160	171	145	154	168	179	149	159	174	185
	1050	MBh	29.7	30.2	31.7	33.8	29.0	29.5	30.9	33.0	28.3	28.8	30.2	32.2	27.6	28.1	29.5	31.4	26.2	26.7	28.0	29.8	24.3	24.7	25.9	27.7
		S/T	0.99	0.96	0.87	0.70	1.00	0.99	0.90	0.73	1.00	1.00	0.92	0.75	1.00	1.00	0.95	0.77	1.00	1.00	0.99	0.80	1.00	1.00	0.99	0.81
		Δ T	26	25	24	21	25	26	24	21	25	25	24	21	24	25	24	21	23	23	24	21	21	22	23	20
		kW	1.91	1.95	2.02	2.08	2.06	2.11	2.18	2.25	2.19	2.24	2.32	2.40	2.31	2.36	2.44	2.53	2.41	2.47	2.55	2.64	2.50	2.56	2.64	2.73
		Amps	8.0	8.1	8.4	8.7	8.5	8.7	9.0	9.3	9.2	9.4	9.7	10.1	9.8	10.0	10.3	10.7	10.4	10.6	11.0	11.4	11.0	11.2	11.6	12.0
		HI PR	247	266	281	293	277	298	315	329	315	339	358	374	359	386	408	426	404	435	459	479	446	480	507	529
		LO PR	118	126	137	146	125	133	145	155	130	138	151	161	137	145	159	169	143	152	166	177	148	157	172	183
	920	MBh	27.4	27.9	29.2	31.2	26.7	27.3	28.5	30.5	26.1	26.6	27.9	29.7	25.5	26.0	27.2	29.0	24.2	24.7	25.8	27.6	22.4	22.8	23.9	25.5
		S/T	0.96	0.92	0.83	0.68	0.99	0.96	0.86	0.70	1.00	0.98	0.89	0.72	1.00	1.00	0.92	0.74	1.00	1.00	0.95	0.77	1.00	1.00	0.96	0.78
		Δ T	26	26	24	21	27	26	25	21	26	26	25	21	25	26	25	22	24	25	25	21	22	23	23	20
		kW	1.87	1.91	1.97	2.03	2.01	2.06	2.12	2.19	2.14	2.19	2.26	2.34	2.25	2.30	2.38	2.46	2.35	2.40	2.48	2.57	2.43	2.49	2.57	2.66
		Amps	7.8	7.9	8.2	8.4	8.3	8.5	8.8	9.1	9.0	9.2	9.5	9.8	9.6	9.8	10.1	10.4	10.1	10.4	10.7	11.1	10.7	10.9	11.3	11.7
		HI PR	240	258	272	284	269	289	306	319	306	329	348	362	348	375	396	413	392	422	445	464	433	466	492	513
		LO PR	115	122	133	142	121	129	141	150	126	134	146	156	132	141	154	164	139	148	161	172	144	153	167	178

IDB = Entering Indoor Dry Bulb Temperature

High and low pressures are measured at the liquid and suction access fittings.

Shaded area reflects AHRI (TVA) conditions

KW = Total system power

Amps: Unit amps (comp.+ evaporator + condenser fan motors)

			Outdoor Ambient Temperature																							
			65				75				85				95				105				115			
			Entering Indoor Wet Bulb Temperature																							
IDB	Airflow		59	63	67	71	59	63	67	71	59	63	67	71	59	63	67	71	59	63	67	71	59	63	67	71
70	1350	MBh	35.3	36.6	40.1	-	34.5	35.7	39.1	-	33.6	34.9	38.2	-	32.8	34.0	37.3	-	31.2	32.3	35.4	-	28.9	29.9	32.8	-
		S/T	0.76	0.64	0.44	-	0.79	0.66	0.46	-	0.81	0.68	0.47	-	0.84	0.70	0.48	-	0.87	0.73	0.50	-	0.88	0.73	0.51	-
		Δ T	18	16	12	-	19	16	12	-	19	16	12	-	19	16	12	-	18	16	12	-	17	15	11	-
		kW	2.37	2.42	2.50	-	2.56	2.61	2.70	-	2.72	2.78	2.87	-	2.86	2.93	3.02	-	2.99	3.05	3.16	-	3.09	3.16	3.27	-
		Amps	9.9	10.1	10.4	-	10.7	10.9	11.2	-	11.5	11.7	12.1	-	12.2	12.5	12.9	-	12.9	13.2	13.6	-	13.6	14.0	14.4	-
		HI PR	246	265	280	-	277	298	314	-	315	338	357	-	358	386	407	-	403	434	458	-	445	479	506	-
		LO PR	112	120	131	-	119	126	138	-	123	131	143	-	130	138	151	-	136	145	158	-	141	149	163	-
	1200	MBh	34.2	35.5	38.9	-	33.5	34.7	38.0	-	32.7	33.8	37.1	-	31.9	33.0	36.2	-	30.3	31.4	34.4	-	28.0	29.1	31.8	-
		S/T	0.73	0.61	0.42	-	0.76	0.63	0.44	-	0.77	0.65	0.45	-	0.80	0.67	0.46	-	0.83	0.69	0.48	-	0.84	0.70	0.48	-
		Δ T	19	17	13	-	19	17	13	-	19	17	13	-	20	17	13	-	19	17	13	-	18	16	12	-
		kW	2.35	2.40	2.48	-	2.53	2.59	2.67	-	2.70	2.76	2.85	-	2.84	2.90	3.00	-	2.96	3.03	3.13	-	3.07	3.13	3.24	-
		Amps	9.9	10.1	10.4	-	10.6	10.8	11.1	-	11.4	11.6	12.0	-	12.1	12.4	12.8	-	12.8	13.1	13.5	-	13.5	13.8	14.3	-
		HI PR	244	263	277	-	274	295	311	-	311	335	354	-	355	382	403	-	399	429	453	-	441	474	501	-
		LO PR	111	118	129	-	118	125	137	-	122	130	142	-	128	137	149	-	134	143	156	-	139	148	162	-
	1050	MBh	31.6	32.8	35.9	-	30.9	32.0	35.1	-	30.1	31.2	34.2	-	29.4	30.5	33.4	-	27.9	29.0	31.7	-	25.9	26.8	29.4	-
		S/T	0.70	0.59	0.41	-	0.73	0.61	0.42	-	0.75	0.62	0.43	-	0.77	0.64	0.45	-	0.80	0.67	0.46	-	0.81	0.67	0.47	-
		Δ T	19	17	13	-	20	17	13	-	20	17	13	-	20	17	13	-	20	17	13	-	18	16	12	-
		kW	2.29	2.34	2.42	-	2.47	2.53	2.61	-	2.63	2.69	2.78	-	2.77	2.83	2.92	-	2.89	2.95	3.05	-	2.99	3.05	3.16	-
		Amps	9.6	9.8	10.1	-	10.3	10.5	10.8	-	11.1	11.4	11.7	-	11.8	12.1	12.4	-	12.5	12.8	13.2	-	13.2	13.5	13.9	-
		HI PR	237	255	269	-	266	286	302	-	302	325	343	-	344	370	391	-	387	417	440	-	428	460	486	-
		LO PR	108	115	125	-	114	121	132	-	119	126	138	-	124	132	145	-	130	139	152	-	135	144	157	-
75	1350	MBh	35.9	36.9	40.0	42.9	35.0	36.1	39.1	41.9	34.2	35.2	38.1	40.9	33.4	34.4	37.2	39.9	31.7	32.6	35.3	37.9	29.4	30.2	32.7	35.1
		S/T	0.87	0.78	0.59	0.38	0.90	0.81	0.61	0.39	0.92	0.83	0.62	0.40	0.95	0.85	0.65	0.41	0.99	0.88	0.67	0.43	1.00	0.89	0.68	0.43
		Δ T	21	20	16	11	21	20	16	11	22	20	16	11	22	20	16	11	21	20	16	11	20	18	15	10
		kW	2.39	2.44	2.52	2.60	2.58	2.63	2.72	2.81	2.74	2.80	2.90	2.99	2.89	2.95	3.05	3.15	3.01	3.08	3.18	3.29	3.12	3.19	3.30	3.41
		Amps	10.0	10.2	10.5	10.9	10.7	11.0	11.3	11.7	11.6	11.8	12.2	12.6	12.3	12.6	13.0	13.4	13.0	13.3	13.8	14.2	13.8	14.1	14.5	15.0
		HI PR	249	268	283	295	279	301	317	331	318	342	361	377	362	389	411	429	407	438	463	483	450	484	511	533
		LO PR	114	121	132	140	120	128	139	148	125	133	145	154	131	139	152	162	137	146	159	170	142	151	165	176
	1200	MBh	34.8	35.9	38.8	41.7	34.0	35.0	37.9	40.7	33.2	34.2	37.0	39.7	32.4	**33.4**	36.1	38.8	30.8	31.7	34.3	36.8	28.5	29.4	31.8	34.1
		S/T	0.83	0.74	0.56	0.36	0.86	0.77	0.58	0.37	0.88	0.79	0.60	0.38	0.91	**0.81**	0.62	0.40	0.94	0.84	0.64	0.41	0.95	0.85	0.64	0.41
		Δ T	22	20	17	12	22	21	17	12	22	21	17	12	23	**21**	17	12	22	20	17	12	21	19	16	11
		kW	2.37	2.42	2.50	2.58	2.56	2.61	2.70	2.79	2.72	2.78	2.87	2.97	2.86	**2.93**	3.03	3.13	2.99	3.05	3.16	3.26	3.09	3.16	3.27	3.38
		Amps	9.9	10.1	10.4	10.8	10.7	10.9	11.2	11.6	11.5	11.7	12.1	12.5	12.2	**12.5**	12.9	13.3	12.9	13.2	13.6	14.1	13.6	14.0	14.4	14.9
		HI PR	247	265	280	292	277	298	314	328	315	339	358	373	358	**386**	407	425	403	434	458	478	445	479	506	528
		LO PR	112	120	131	139	119	126	138	147	123	131	143	153	130	**138**	151	160	136	145	158	168	141	150	163	174
	1050	MBh	32.1	33.1	35.8	38.5	31.4	32.3	35.0	37.6	30.7	31.6	34.2	36.7	29.9	30.8	33.3	35.8	28.4	29.3	31.7	34.0	26.3	27.1	29.3	31.5
		S/T	0.80	0.71	0.54	0.35	0.83	0.74	0.56	0.36	0.85	0.76	0.57	0.37	0.88	0.78	0.59	0.38	0.91	0.81	0.62	0.40	0.92	0.82	0.62	0.40
		Δ T	22	21	17	12	23	21	17	12	23	21	17	12	23	21	17	12	23	21	17	12	21	19	16	11
		kW	2.31	2.36	2.44	2.52	2.49	2.55	2.63	2.72	2.65	2.71	2.80	2.89	2.79	2.85	2.95	3.05	2.91	2.98	3.08	3.18	3.01	3.08	3.18	3.29
		Amps	9.7	9.9	10.2	10.5	10.4	10.6	10.9	11.3	11.2	11.5	11.8	12.2	11.9	12.2	12.5	13.0	12.6	12.9	13.3	13.8	13.3	13.6	14.0	14.5
		HI PR	239	257	272	283	268	289	305	318	305	328	347	362	348	374	395	412	391	421	444	463	432	465	491	512
		LO PR	109	116	127	135	115	123	134	142	120	127	139	148	126	134	146	156	132	140	153	163	136	145	158	169

IDB = Entering Indoor Dry Bulb Temperature

High and low pressures are measured at the liquid and suction access fittings.

Shaded area reflects ACCA (TVA) conditions

KW = Total system power

Amps: Unit amps (comp.+ evaporator + condenser fan motors)

Expanded Cooling Data — APH1436H41** (cont.)

			Outdoor Ambient Temperature																							
			65				75				85				95				105				115			
			Entering Indoor Wet Bulb Temperature																							
IDB	Airflow		59	63	67	71	59	63	67	71	59	63	67	71	59	63	67	71	59	63	67	71	59	63	67	71
80	1350	MBh	36.5	37.3	39.9	42.6	35.7	36.4	38.9	41.6	34.8	35.6	38.0	40.6	34.0	34.7	37.1	39.6	32.3	33.0	35.2	37.7	29.9	30.5	32.6	34.9
		S/T	0.95	0.89	0.73	0.54	1.00	0.93	0.75	0.56	1.00	0.95	0.77	0.58	1.00	1.00	0.80	0.60	1.00	1.00	0.83	0.62	1.00	1.00	0.83	0.62
		Δ T	24	23	20	16	24	23	20	16	24	23	20	16	23	24	20	16	22	22	20	16	20	21	19	15
		kW	2.41	2.46	2.54	2.62	2.60	2.66	2.74	2.83	2.76	2.83	2.92	3.02	2.91	2.98	3.08	3.18	3.04	3.11	3.21	3.32	3.14	3.22	3.33	3.44
		Amps	10.1	10.3	10.6	11.0	10.8	11.1	11.4	11.8	11.7	11.9	12.3	12.7	12.4	12.7	13.1	13.6	13.2	13.5	13.9	14.4	13.9	14.2	14.7	15.2
		HI PR	252	271	286	298	282	304	321	334	321	345	365	380	366	393	415	433	411	443	467	487	454	489	516	539
		LO PR	115	122	133	142	121	129	141	150	126	134	146	156	132	141	154	164	139	147	161	171	143	153	167	177
	1200	MBh	35.4	36.2	38.7	41.4	34.6	35.4	37.8	40.4	33.8	34.5	36.9	39.4	33.0	33.7	**36.0**	38.5	31.3	32.0	34.2	36.6	29.0	29.7	31.7	33.9
		S/T	0.91	0.85	0.69	0.52	0.94	0.88	0.72	0.54	0.97	0.91	0.74	0.55	1.00	0.93	**0.76**	0.57	1.00	0.97	0.79	0.59	1.00	0.98	0.80	0.60
		Δ T	25	24	21	16	25	24	21	17	25	24	21	17	25	24	**21**	17	24	24	21	17	22	22	19	15
		kW	2.39	2.44	2.52	2.60	2.58	2.63	2.72	2.81	2.74	2.80	2.90	2.99	2.89	2.95	**3.05**	3.15	3.01	3.08	3.18	3.29	3.12	3.19	3.30	3.41
		Amps	10.0	10.2	10.5	10.9	10.7	11.0	11.3	11.7	11.6	11.8	12.2	12.6	12.3	12.6	**13.0**	13.4	13.0	13.3	13.8	14.2	13.8	14.1	14.5	15.0
		HI PR	249	268	283	295	279	301	318	331	318	342	361	377	362	390	**411**	429	407	438	463	483	450	484	511	533
		LO PR	114	121	132	140	120	128	139	148	125	133	145	154	131	139	**152**	162	137	146	159	170	142	151	165	176
	1050	MBh	32.7	33.4	35.7	38.2	32.0	32.7	34.9	37.3	31.2	31.9	34.1	36.4	30.4	31.1	33.2	35.5	28.9	29.5	31.6	33.7	26.8	27.4	29.2	31.3
		S/T	0.88	0.82	0.67	0.50	0.91	0.85	0.69	0.52	0.93	0.87	0.71	0.53	0.96	0.90	0.73	0.55	1.00	0.94	0.76	0.57	1.01	0.94	0.77	0.57
		Δ T	25	24	21	17	25	24	21	17	25	24	21	17	26	25	21	17	25	24	21	17	24	23	20	16
		kW	2.33	2.38	2.46	2.54	2.51	2.57	2.65	2.74	2.67	2.73	2.82	2.92	2.81	2.88	2.97	3.07	2.94	3.00	3.10	3.21	3.04	3.11	3.21	3.32
		Amps	9.8	10.0	10.3	10.6	10.5	10.7	11.0	11.4	11.3	11.5	11.9	12.3	12.0	12.3	12.7	13.1	12.7	13.0	13.4	13.9	13.4	13.7	14.1	14.6
		HI PR	242	260	274	286	271	292	308	321	308	332	350	365	351	378	399	416	395	425	449	468	436	470	496	517
		LO PR	110	117	128	136	116	124	135	144	121	129	140	150	127	135	148	157	133	142	155	165	138	146	160	170
85	1350	MBh	37.2	37.9	39.7	42.3	36.3	37.0	38.7	41.3	35.4	36.1	37.8	40.3	34.6	35.2	36.9	39.4	32.8	33.5	35.0	37.4	30.4	31.0	32.5	34.6
		S/T	1.00	0.96	0.87	0.71	1.00	1.00	0.90	0.73	1.00	1.00	0.92	0.75	1.00	1.00	0.95	0.77	1.00	1.00	0.99	0.80	1.00	1.00	1.00	0.81
		Δ T	25	25	23	20	25	25	24	21	24	25	24	21	24	24	24	21	22	23	24	20	21	21	22	19
		kW	2.43	2.48	2.56	2.65	2.62	2.68	2.76	2.86	2.79	2.85	2.94	3.04	2.94	3.00	3.10	3.21	3.06	3.13	3.24	3.35	3.17	3.24	3.35	3.47
		Amps	10.2	10.4	10.7	11.1	10.9	11.2	11.5	11.9	11.8	12.0	12.4	12.8	12.5	12.8	13.2	13.7	13.3	13.6	14.0	14.5	14.0	14.3	14.8	15.3
		HI PR	254	273	289	301	285	307	324	338	324	349	368	384	369	397	420	438	415	447	472	492	459	494	522	544
		LO PR	116	123	135	143	122	130	142	151	127	135	148	157	134	142	155	165	140	149	163	173	145	154	168	179
	1200	MBh	36.1	36.8	38.5	41.1	35.2	35.9	37.6	40.1	34.4	35.1	36.7	39.2	33.6	34.2	35.8	38.2	31.9	32.5	34.0	36.3	29.5	30.1	31.5	33.6
		S/T	0.95	0.92	0.83	0.67	0.99	0.95	0.86	0.70	1.00	0.98	0.88	0.72	1.00	1.00	0.91	0.74	1.00	1.00	0.94	0.77	1.00	1.00	0.95	0.77
		Δ T	26	26	24	21	27	26	25	21	26	26	25	21	26	26	25	22	24	25	25	21	23	23	23	20
		kW	2.41	2.46	2.54	2.62	2.60	2.66	2.74	2.83	2.76	2.83	2.92	3.02	2.91	2.98	3.08	3.18	3.04	3.11	3.21	3.32	3.14	3.22	3.33	3.44
		Amps	10.1	10.3	10.6	11.0	10.8	11.1	11.4	11.8	11.7	11.9	12.3	12.7	12.4	12.7	13.1	13.6	13.2	13.5	13.9	14.4	13.9	14.2	14.7	15.2
		HI PR	252	271	286	298	282	304	321	334	321	345	365	380	366	393	415	433	411	443	467	487	454	489	516	539
		LO PR	115	122	133	142	121	129	141	150	126	134	146	156	132	141	154	164	139	147	161	171	143	153	167	177
	1050	MBh	33.3	33.9	35.5	37.9	32.5	33.1	34.7	37.0	31.7	32.4	33.9	36.2	31.0	31.6	33.1	35.3	29.4	30.0	31.4	33.5	27.3	27.8	29.1	31.0
		S/T	0.92	0.89	0.80	0.65	0.95	0.92	0.83	0.67	0.98	0.94	0.85	0.69	1.00	0.97	0.88	0.71	1.00	1.00	0.91	0.74	1.00	1.00	0.92	0.74
		Δ T	27	26	25	22	27	27	25	22	27	27	25	22	27	27	25	22	26	26	25	22	24	24	23	20
		kW	2.35	2.40	2.48	2.56	2.53	2.59	2.67	2.76	2.70	2.76	2.85	2.94	2.84	2.90	3.00	3.10	2.96	3.03	3.13	3.23	3.06	3.13	3.24	3.35
		Amps	9.9	10.1	10.4	10.7	10.6	10.8	11.1	11.5	11.4	11.6	12.0	12.4	12.1	12.4	12.8	13.2	12.8	13.1	13.5	14.0	13.5	13.8	14.3	14.8
		HI PR	244	263	277	289	274	295	311	324	311	335	354	369	355	382	403	420	399	429	453	473	441	474	501	522
		LO PR	111	118	129	138	118	125	136	145	122	130	142	151	128	136	149	159	134	143	156	166	139	148	162	172

IDB = Entering Indoor Dry Bulb Temperature

High and low pressures are measured at the liquid and suction access fittings.

Shaded area reflects AHRI (TVA) conditions

KW = Total system power

Amps: Unit amps (comp.+ evaporator + condenser fan motors)

			Outdoor Ambient Temperature																							
			65				75				85				95				105				115			
			Entering Indoor Wet Bulb Temperature																							
IDB	Airflow		59	63	67	71	59	63	67	71	59	63	67	71	59	63	67	71	59	63	67	71	59	63	67	71
70	1461	MBh	39.2	40.6	44.5	-	38.3	39.7	43.5	-	37.4	38.7	42.4	-	36.5	37.8	41.4	-	34.6	35.9	39.3	-	32.1	33.3	36.4	-
		S/T	0.75	0.62	0.43	-	0.78	0.65	0.45	-	0.79	0.66	0.46	-	0.82	0.69	0.47	-	0.85	0.71	0.49	-	0.86	0.72	0.50	-
		Δ T	18	16	12	-	19	16	12	-	19	16	12	-	19	16	12	-	19	16	12	-	17	15	11	-
		kW	2.62	2.67	2.76	-	2.82	2.88	2.97	-	3.00	3.06	3.16	-	3.16	3.23	3.33	-	3.29	3.36	3.48	-	3.41	3.48	3.60	-
		Amps	10.6	10.8	11.1	-	11.4	11.6	12.0	-	12.3	12.6	13.0	-	13.2	13.5	13.9	-	14.0	14.3	14.8	-	14.8	15.2	15.7	-
		HI PR	240	258	272	-	269	289	305	-	306	329	347	-	348	375	396	-	392	422	445	-	433	466	492	-
		LO PR	111	118	129	-	117	125	136	-	122	130	141	-	128	136	149	-	134	143	156	-	139	148	161	-
	1300	MBh	38.1	39.4	43.2	-	37.2	38.5	42.2	-	36.3	37.6	41.2	-	35.4	36.7	40.2	-	33.6	34.9	38.2	-	31.2	32.3	35.4	-
		S/T	0.71	0.60	0.41	-	0.74	0.62	0.43	-	0.76	0.63	0.44	-	0.78	0.65	0.45	-	0.81	0.68	0.47	-	0.82	0.68	0.47	-
		Δ T	19	17	13	-	19	17	13	-	19	17	13	-	20	17	13	-	19	17	13	-	18	16	12	-
		kW	2.60	2.65	2.73	-	2.80	2.86	2.95	-	2.97	3.04	3.14	-	3.13	3.20	3.30	-	3.26	3.34	3.45	-	3.38	3.45	3.57	-
		Amps	10.5	10.7	11.0	-	11.3	11.5	11.9	-	12.2	12.5	12.9	-	13.0	13.4	13.8	-	13.9	14.2	14.7	-	14.7	15.0	15.5	-
		HI PR	237	255	270	-	266	286	302	-	303	326	344	-	345	371	392	-	388	417	441	-	429	461	487	-
		LO PR	110	117	128	-	116	123	135	-	121	128	140	-	127	135	147	-	133	141	154	-	137	146	159	-
	1139	MBh	35.1	36.4	39.9	-	34.3	35.6	39.0	-	33.5	34.7	38.0	-	32.7	33.9	37.1	-	31.0	32.2	35.2	-	28.8	29.8	32.7	-
		S/T	0.69	0.57	0.40	-	0.71	0.60	0.41	-	0.73	0.61	0.42	-	0.75	0.63	0.44	-	0.78	0.65	0.45	-	0.79	0.66	0.46	-
		Δ T	19	17	13	-	20	17	13	-	20	17	13	-	20	17	13	-	20	17	13	-	18	16	12	-
		kW	2.53	2.59	2.67	-	2.73	2.79	2.88	-	2.90	2.96	3.06	-	3.05	3.12	3.22	-	3.18	3.25	3.36	-	3.29	3.36	3.48	-
		Amps	10.2	10.4	10.8	-	11.0	11.2	11.6	-	11.9	12.2	12.6	-	12.7	13.0	13.4	-	13.5	13.8	14.3	-	14.3	14.6	15.1	-
		HI PR	230	248	261	-	258	278	293	-	294	316	334	-	334	360	380	-	376	405	428	-	416	447	472	-
		LO PR	107	113	124	-	113	120	131	-	117	124	136	-	123	131	143	-	129	137	150	-	133	142	155	-
75	1461	MBh	39.9	41.0	44.4	47.7	38.9	40.1	43.4	46.6	38.0	39.1	42.4	45.5	37.1	38.2	41.3	44.4	35.2	36.3	39.3	42.1	32.6	33.6	36.4	39.0
		S/T	0.85	0.76	0.58	0.37	0.88	0.79	0.60	0.38	0.90	0.81	0.61	0.39	0.93	0.83	0.63	0.41	0.97	0.87	0.66	0.42	0.98	0.87	0.66	0.43
		Δ T	21	20	16	11	22	20	16	11	22	20	16	11	22	20	16	11	21	20	16	11	20	18	15	10
		kW	2.64	2.69	2.78	2.87	2.84	2.90	3.00	3.10	3.02	3.09	3.19	3.30	3.18	3.25	3.36	3.47	3.32	3.39	3.51	3.62	3.43	3.51	3.63	3.75
		Amps	10.6	10.9	11.2	11.6	11.5	11.7	12.1	12.6	12.4	12.7	13.2	13.6	13.3	13.6	14.0	14.6	14.1	14.5	14.9	15.5	14.9	15.3	15.8	16.4
		HI PR	242	260	275	287	272	292	309	322	309	332	351	366	352	379	400	417	396	426	450	469	437	471	497	518
		LO PR	112	119	130	139	118	126	137	146	123	131	143	152	129	137	150	160	135	144	157	168	140	149	163	173
	1300	MBh	38.7	39.8	43.1	46.3	37.8	38.9	42.1	45.2	36.9	38.0	41.1	44.1	36.0	**37.1**	40.1	43.1	34.2	35.2	38.1	40.9	31.7	32.6	35.3	37.9
		S/T	0.81	0.73	0.55	0.35	0.84	0.75	0.57	0.37	0.86	0.77	0.58	0.38	0.89	**0.80**	0.60	0.39	0.92	0.83	0.62	0.40	0.93	0.83	0.63	0.41
		Δ T	22	20	17	12	22	21	17	12	22	21	17	12	23	**21**	17	12	22	21	17	12	21	19	16	11
		kW	2.62	2.67	2.76	2.85	2.82	2.88	2.97	3.07	3.00	3.06	3.16	3.27	3.16	**3.23**	3.33	3.44	3.29	3.36	3.48	3.59	3.41	3.48	3.60	3.72
		Amps	10.6	10.8	11.1	11.5	11.4	11.6	12.0	12.5	12.3	12.6	13.0	13.5	13.2	**13.5**	13.9	14.4	14.0	14.3	14.8	15.3	14.8	15.2	15.7	16.2
		HI PR	240	258	272	284	269	289	306	319	306	329	347	362	348	**375**	396	413	392	422	445	464	433	466	492	513
		LO PR	111	118	129	137	117	125	136	145	122	130	141	151	128	**136**	149	158	134	143	156	166	139	148	161	172
	1139	MBh	35.7	36.8	39.8	42.7	34.9	35.9	38.9	41.7	34.1	35.1	38.0	40.7	33.2	34.2	37.0	39.7	31.6	32.5	35.2	37.8	29.2	30.1	32.6	35.0
		S/T	0.78	0.70	0.53	0.34	0.81	0.72	0.55	0.35	0.83	0.74	0.56	0.36	0.86	0.77	0.58	0.37	0.89	0.80	0.60	0.39	0.90	0.80	0.61	0.39
		Δ T	23	21	17	12	23	21	17	12	23	21	17	12	23	21	17	12	23	21	17	12	21	20	16	11
		kW	2.55	2.61	2.69	2.78	2.75	2.81	2.90	2.99	2.92	2.99	3.09	3.19	3.08	3.14	3.25	3.36	3.21	3.28	3.39	3.50	3.32	3.39	3.51	3.63
		Amps	10.3	10.5	10.8	11.2	11.1	11.3	11.7	12.1	12.0	12.3	12.7	13.1	12.8	13.1	13.5	14.0	13.6	13.9	14.4	14.9	14.4	14.7	15.2	15.8
		HI PR	232	250	264	275	261	281	296	309	297	319	337	352	338	364	384	400	380	409	432	450	420	452	477	498
		LO PR	108	114	125	133	114	121	132	141	118	126	137	146	124	132	144	154	130	138	151	161	135	143	156	166

IDB = Entering Indoor Dry Bulb Temperature

High and low pressures are measured at the liquid and suction access fittings.

Shaded area reflects ACCA (TVA) conditions

KW = Total system power

Amps: Unit amps (comp.+ evaporator + condenser fan motors)

Expanded Cooling Data — APH1442H41** (cont.)

			Outdoor Ambient Temperature																							
			65				75				85				95				105				115			
			Entering Indoor Wet Bulb Temperature																							
IDB	Airflow		59	63	67	71	59	63	67	71	59	63	67	71	59	63	67	71	59	63	67	71	59	63	67	71
80	1461	MBh	40.6	41.5	44.3	47.3	39.6	40.5	43.3	46.2	38.7	39.5	42.2	45.1	37.7	38.6	41.2	44.0	35.9	36.6	39.1	41.8	33.2	33.9	36.3	38.8
		S/T	0.93	0.87	0.71	0.53	0.97	0.91	0.74	0.55	1.00	0.93	0.76	0.57	1.00	0.96	0.78	0.58	1.00	1.00	0.81	0.61	1.00	1.00	0.82	0.61
		Δ T	24	23	20	16	24	23	20	16	24	23	20	16	24	23	20	16	23	23	20	16	21	21	19	15
		kW	2.66	2.72	2.80	2.89	2.87	2.93	3.02	3.12	3.05	3.12	3.22	3.33	3.21	3.28	3.39	3.50	3.35	3.42	3.54	3.66	3.46	3.54	3.66	3.79
		Amps	10.7	11.0	11.3	11.7	11.6	11.9	12.2	12.7	12.6	12.9	13.3	13.8	13.4	13.7	14.2	14.7	14.2	14.6	15.1	15.6	15.1	15.4	15.9	16.5
		HI PR	244	263	278	290	274	295	312	325	312	336	354	370	355	382	404	421	400	430	454	474	442	475	502	523
		LO PR	113	120	131	140	120	127	139	148	124	132	144	154	131	139	152	161	137	146	159	169	141	151	164	175
	1300	MBh	39.4	40.2	43.0	46.0	38.5	39.3	42.0	44.9	37.6	38.4	41.0	43.8	36.6	37.4	**40.0**	42.8	34.8	35.6	38.0	40.6	32.2	32.9	35.2	37.6
		S/T	0.89	0.83	0.68	0.51	0.92	0.86	0.70	0.53	0.95	0.89	0.72	0.54	0.98	0.91	**0.74**	0.56	1.00	0.95	0.77	0.58	1.00	0.96	0.78	0.58
		Δ T	25	24	21	16	25	24	21	17	25	24	21	17	25	24	**21**	17	25	24	21	17	23	22	19	16
		kW	2.64	2.69	2.78	2.87	2.84	2.90	3.00	3.10	3.02	3.09	3.19	3.30	3.18	3.25	**3.36**	3.47	3.32	3.39	3.51	3.62	3.43	3.51	3.63	3.75
		Amps	10.6	10.9	11.2	11.6	11.5	11.7	12.1	12.6	12.4	12.7	13.2	13.6	13.3	13.6	**14.0**	14.6	14.1	14.5	14.9	15.5	14.9	15.3	15.8	16.4
		HI PR	242	260	275	287	272	292	309	322	309	332	351	366	352	379	**400**	417	396	426	450	469	437	471	497	518
		LO PR	112	119	130	139	118	126	137	146	123	131	143	152	129	137	**150**	160	135	144	157	168	140	149	163	173
	1139	MBh	36.4	37.1	39.7	42.4	35.5	36.3	38.8	41.4	34.7	35.4	37.8	40.5	33.8	34.6	36.9	39.5	32.1	32.8	35.1	37.5	29.8	30.4	32.5	34.7
		S/T	0.86	0.80	0.65	0.49	0.89	0.83	0.68	0.51	0.91	0.85	0.70	0.52	0.94	0.88	0.72	0.54	0.98	0.92	0.75	0.56	0.98	0.92	0.75	0.56
		Δ T	25	24	21	17	25	24	21	17	25	24	21	17	26	25	21	17	25	24	21	17	24	23	20	16
		kW	2.57	2.63	2.71	2.80	2.77	2.83	2.92	3.02	2.95	3.01	3.11	3.21	3.10	3.17	3.28	3.39	3.23	3.31	3.42	3.53	3.35	3.42	3.54	3.66
		Amps	10.4	10.6	10.9	11.3	11.2	11.4	11.8	12.2	12.1	12.4	12.8	13.3	12.9	13.2	13.7	14.2	13.7	14.1	14.5	15.1	14.5	14.9	15.4	15.9
		HI PR	235	253	267	278	263	283	299	312	300	322	340	355	341	367	388	404	384	413	436	455	424	456	482	503
		LO PR	109	116	126	134	115	122	133	142	119	127	139	148	125	133	146	155	131	140	153	163	136	145	158	168
85	1461	MBh	41.3	42.1	44.1	47.0	40.3	41.1	43.0	45.9	39.4	40.1	42.0	44.8	38.4	39.1	41.0	43.7	36.5	37.2	38.9	41.5	33.8	34.4	36.1	38.5
		S/T	0.98	0.94	0.85	0.69	1.00	0.98	0.88	0.72	1.00	1.00	0.90	0.73	1.00	1.00	0.93	0.76	1.00	1.00	0.97	0.79	1.00	1.00	0.98	0.79
		Δ T	25	25	24	20	25	25	24	21	25	25	24	21	24	25	24	21	23	23	24	21	21	22	22	19
		kW	2.68	2.74	2.82	2.92	2.89	2.95	3.05	3.15	3.07	3.14	3.24	3.35	3.24	3.31	3.42	3.53	3.37	3.45	3.57	3.69	3.49	3.57	3.69	3.82
		Amps	10.8	11.1	11.4	11.9	11.7	12.0	12.3	12.8	12.7	13.0	13.4	13.9	13.5	13.8	14.3	14.8	14.4	14.7	15.2	15.8	15.2	15.6	16.1	16.7
		HI PR	247	266	281	293	277	298	315	328	315	339	358	373	359	386	408	425	404	434	459	478	446	480	507	529
		LO PR	114	122	133	141	121	128	140	149	126	134	146	155	132	140	153	163	138	147	160	171	143	152	166	177
	1300	MBh	40.1	40.9	42.8	45.6	39.1	39.9	41.8	44.6	38.2	39.0	40.8	43.5	37.3	38.0	39.8	42.5	35.4	36.1	37.8	40.3	32.8	33.4	35.0	37.4
		S/T	0.93	0.90	0.81	0.66	0.97	0.93	0.84	0.68	0.99	0.96	0.86	0.70	1.00	0.99	0.89	0.72	1.00	1.00	0.92	0.75	1.00	1.00	0.93	0.76
		Δ T	26	26	25	21	27	26	25	22	27	26	25	22	26	27	25	22	25	26	25	21	23	24	23	20
		kW	2.66	2.72	2.80	2.89	2.87	2.93	3.02	3.12	3.05	3.12	3.22	3.33	3.21	3.28	3.39	3.50	3.35	3.42	3.54	3.66	3.46	3.54	3.66	3.79
		Amps	10.7	11.0	11.3	11.7	11.6	11.9	12.2	12.7	12.6	12.9	13.3	13.8	13.4	13.7	14.2	14.7	14.2	14.6	15.1	15.6	15.1	15.4	15.9	16.5
		HI PR	244	263	278	290	274	295	312	325	312	336	354	370	355	382	404	421	400	430	454	474	442	475	502	523
		LO PR	113	120	131	140	120	127	139	148	124	132	144	154	131	139	152	161	137	146	159	169	141	151	164	175
	1139	MBh	37.0	37.7	39.5	42.1	36.1	36.8	38.6	41.2	35.3	36.0	37.7	40.2	34.4	35.1	36.7	39.2	32.7	33.3	34.9	37.2	30.3	30.9	32.3	34.5
		S/T	0.90	0.87	0.78	0.64	0.93	0.90	0.81	0.66	0.96	0.92	0.83	0.67	0.99	0.95	0.86	0.70	1.00	0.99	0.89	0.72	1.00	1.00	0.90	0.73
		Δ T	27	26	25	22	27	27	25	22	27	27	25	22	27	27	25	22	26	27	25	22	24	25	23	20
		kW	2.59	2.65	2.73	2.82	2.80	2.86	2.95	3.04	2.97	3.04	3.14	3.24	3.13	3.20	3.30	3.41	3.26	3.33	3.45	3.56	3.38	3.45	3.57	3.69
		Amps	10.5	10.7	11.0	11.4	11.3	11.5	11.9	12.3	12.2	12.5	12.9	13.4	13.0	13.3	13.8	14.3	13.9	14.2	14.7	15.2	14.7	15.0	15.5	16.1
		HI PR	237	255	269	281	266	286	302	315	303	326	344	359	345	371	392	408	388	417	441	460	428	461	487	508
		LO PR	110	117	127	136	116	123	135	143	121	128	140	149	127	135	147	157	133	141	154	164	137	146	159	170

IDB = Entering Indoor Dry Bulb Temperature

High and low pressures are measured at the liquid and suction access fittings.

Shaded area reflects AHRI (TVA) conditions

KW = Total system power

Amps: Unit amps (comp.+ evaporator + condenser fan motors)

			Outdoor Ambient Temperature																							
			65				75				85				95				105				115			
			Entering Indoor Wet Bulb Temperature																							
IDB	Airflow		59	63	67	71	59	63	67	71	59	63	67	71	59	63	67	71	59	63	67	71	59	63	67	71
70	1798	MBh	45.1	46.7	51.2	-	44.0	45.6	50.0	-	43.0	44.5	48.8	-	41.9	43.5	47.6	-	39.8	41.3	45.2	-	36.9	38.2	41.9	-
		S/T	0.77	0.65	0.45	-	0.80	0.67	0.46	-	0.82	0.69	0.48	-	0.85	0.71	0.49	-	0.88	0.74	0.51	-	0.89	0.74	0.51	-
		Δ T	18	15	12	-	18	16	12	-	18	16	12	-	18	16	12	-	18	16	12	-	17	15	11	-
		kW	2.99	3.05	3.15	-	3.22	3.28	3.39	-	3.42	3.49	3.60	-	3.59	3.67	3.79	-	3.74	3.83	3.95	-	3.87	3.96	4.09	-
		Amps	12.9	13.1	13.5	-	13.8	14.1	14.5	-	14.9	15.2	15.6	-	15.8	16.1	16.6	-	16.7	17.1	17.6	-	17.6	18.0	18.5	-
		HI PR	242	261	275	-	272	292	309	-	309	332	351	-	352	379	400	-	396	426	450	-	437	471	497	-
		LO PR	109	116	127	-	116	123	134	-	120	128	139	-	126	134	146	-	132	141	154	-	137	145	159	-
	1600	MBh	43.8	45.4	49.7	-	42.7	44.3	48.5	-	41.7	43.2	47.4	-	40.7	42.2	46.2	-	38.7	40.1	43.9	-	35.8	37.1	40.7	-
		S/T	0.74	0.62	0.43	-	0.77	0.64	0.44	-	0.79	0.66	0.45	-	0.81	0.68	0.47	-	0.84	0.70	0.49	-	0.85	0.71	0.49	-
		Δ T	19	16	12	-	19	16	12	-	19	16	12	-	19	16	12	-	19	16	12	-	17	15	11	-
		kW	2.97	3.03	3.12	-	3.19	3.26	3.36	-	3.39	3.46	3.57	-	3.56	3.64	3.76	-	3.71	3.80	3.92	-	3.84	3.93	4.06	-
		Amps	12.8	13.0	13.4	-	13.7	14.0	14.4	-	14.7	15.1	15.5	-	15.6	16.0	16.5	-	16.5	16.9	17.4	-	17.4	17.8	18.4	-
		HI PR	240	258	272	-	269	289	306	-	306	329	348	-	348	375	396	-	392	422	445	-	433	466	492	-
		LO PR	108	115	126	-	114	122	133	-	119	126	138	-	125	133	145	-	131	139	152	-	135	144	157	-
	1402	MBh	40.4	41.9	45.9	-	39.5	40.9	44.8	-	38.5	39.9	43.7	-	37.6	38.9	42.7	-	35.7	37.0	40.5	-	33.1	34.3	37.5	-
		S/T	0.71	0.59	0.41	-	0.74	0.62	0.43	-	0.76	0.63	0.44	-	0.78	0.65	0.45	-	0.81	0.68	0.47	-	0.82	0.68	0.47	-
		Δ T	19	16	12	-	19	17	13	-	19	17	13	-	19	17	13	-	19	16	12	-	18	15	12	-
		kW	2.90	2.96	3.05	-	3.11	3.18	3.28	-	3.31	3.38	3.49	-	3.48	3.55	3.67	-	3.62	3.70	3.82	-	3.75	3.83	3.96	-
		Amps	12.5	12.7	13.1	-	13.3	13.6	14.0	-	14.4	14.7	15.1	-	15.2	15.6	16.1	-	16.1	16.5	17.0	-	17.0	17.4	17.9	-
		HI PR	233	250	264	-	261	281	296	-	297	319	337	-	338	364	384	-	380	409	432	-	420	452	477	-
		LO PR	105	112	122	-	111	118	129	-	115	123	134	-	121	129	141	-	127	135	147	-	131	140	153	-
75	1798	MBh	45.8	47.2	51.1	54.8	44.8	46.1	49.9	53.6	43.7	45.0	48.7	52.3	42.6	43.9	47.5	51.0	40.5	41.7	45.1	48.5	37.5	38.6	41.8	44.9
		S/T	0.88	0.79	0.60	0.38	0.91	0.82	0.62	0.40	0.94	0.84	0.63	0.41	0.97	0.86	0.65	0.42	1.00	0.90	0.68	0.44	1.00	0.90	0.68	0.44
		Δ T	21	19	16	11	21	19	16	11	21	19	16	11	21	19	16	11	21	19	16	11	19	18	15	10
		kW	3.01	3.08	3.17	3.27	3.24	3.31	3.42	3.53	3.45	3.52	3.63	3.75	3.62	3.70	3.82	3.95	3.78	3.86	3.99	4.12	3.91	3.99	4.13	4.27
		Amps	13.0	13.2	13.6	14.1	13.9	14.2	14.6	15.1	15.0	15.3	15.8	16.3	15.9	16.3	16.7	17.3	16.8	17.2	17.7	18.4	17.7	18.1	18.7	19.4
		HI PR	245	263	278	290	274	295	312	325	312	336	355	370	355	383	404	421	400	430	454	474	442	476	502	524
		LO PR	110	118	128	137	117	124	136	144	121	129	141	150	127	136	148	158	134	142	155	165	138	147	160	171
	1600	MBh	44.5	45.8	49.6	53.2	43.5	44.8	48.4	52.0	42.4	43.7	47.3	50.8	41.4	**42.6**	46.1	49.5	39.3	40.5	43.8	47.0	36.4	37.5	40.6	43.6
		S/T	0.84	0.75	0.57	0.37	0.87	0.78	0.59	0.38	0.89	0.80	0.60	0.39	0.92	**0.82**	0.62	0.40	0.96	0.86	0.65	0.42	0.96	0.86	0.65	0.42
		Δ T	21	20	16	11	22	20	16	11	22	20	16	11	22	**20**	17	11	22	20	16	11	20	19	15	11
		kW	2.99	3.05	3.15	3.25	3.22	3.29	3.39	3.50	3.42	3.49	3.60	3.72	3.59	**3.67**	3.79	3.92	3.75	3.83	3.95	4.09	3.88	3.96	4.09	4.23
		Amps	12.9	13.1	13.5	14.0	13.8	14.1	14.5	15.0	14.9	15.2	15.6	16.2	15.8	**16.1**	16.6	17.2	16.7	17.1	17.6	18.2	17.6	18.0	18.5	19.2
		HI PR	242	261	275	287	272	292	309	322	309	333	351	366	352	**379**	400	417	396	426	450	469	437	471	497	519
		LO PR	109	116	127	135	116	123	134	143	120	128	139	149	126	**134**	147	156	132	141	154	164	137	145	159	169
	1402	MBh	41.1	42.3	45.8	49.1	40.1	41.3	44.7	48.0	39.2	40.3	43.7	46.8	38.2	39.3	42.6	45.7	36.3	37.4	40.5	43.4	33.6	34.6	37.5	40.2
		S/T	0.81	0.72	0.55	0.35	0.84	0.75	0.57	0.37	0.86	0.77	0.58	0.37	0.89	0.79	0.60	0.39	0.92	0.82	0.62	0.40	0.93	0.83	0.63	0.40
		Δ T	22	20	16	11	22	20	17	12	22	20	17	12	22	20	17	12	22	20	17	11	20	19	15	11
		kW	2.92	2.98	3.07	3.17	3.14	3.21	3.31	3.41	3.33	3.41	3.52	3.63	3.51	3.58	3.70	3.82	3.65	3.73	3.85	3.98	3.78	3.86	3.99	4.12
		Amps	12.6	12.8	13.2	13.6	13.5	13.7	14.1	14.6	14.5	14.8	15.2	15.8	15.4	15.7	16.2	16.7	16.3	16.6	17.1	17.7	17.1	17.5	18.1	18.7
		HI PR	235	253	267	278	264	284	300	312	300	323	341	355	341	367	388	405	384	413	436	455	424	457	482	503
		LO PR	106	113	123	131	112	119	130	139	116	124	135	144	122	130	142	151	128	136	149	159	133	141	154	164

IDB = Entering Indoor Dry Bulb Temperature

High and low pressures are measured at the liquid and suction access fittings.

Shaded area reflects ACCA (TVA) conditions

KW = Total system power

Amps: Unit amps (comp.+ evaporator + condenser fan motors)

Expanded Cooling Data — APH1448H41** (cont.)

			Outdoor Ambient Temperature																							
			65				75				85				95				105				115			
			Entering Indoor Wet Bulb Temperature																							
IDB	Airflow		59	63	67	71	59	63	67	71	59	63	67	71	59	63	67	71	59	63	67	71	59	63	67	71
80	1798	MBh	46.7	47.7	50.9	54.4	45.6	46.6	49.7	53.2	44.5	45.5	48.6	51.9	43.4	44.3	47.4	50.6	41.2	42.1	45.0	48.1	38.2	39.0	41.7	44.6
		S/T	0.97	0.91	0.74	0.55	1.00	0.94	0.76	0.57	1.00	0.96	0.78	0.59	1.00	1.00	0.81	0.60	1.00	1.00	0.84	0.63	1.00	1.00	0.85	0.63
		Δ T	23	22	19	15	23	22	19	16	23	22	19	16	22	23	20	16	21	22	19	15	20	20	18	14
		kW	3.04	3.10	3.20	3.30	3.27	3.34	3.45	3.56	3.47	3.55	3.66	3.78	3.65	3.73	3.86	3.99	3.81	3.89	4.02	4.16	3.94	4.03	4.16	4.30
		Amps	13.1	13.4	13.7	14.2	14.0	14.3	14.7	15.2	15.1	15.4	15.9	16.4	16.0	16.4	16.9	17.5	17.0	17.4	17.9	18.5	17.9	18.3	18.9	19.5
		HI PR	247	266	281	293	277	298	315	329	315	339	358	374	359	386	408	426	404	435	459	479	446	480	507	529
		LO PR	112	119	130	138	118	125	137	146	123	130	142	152	129	137	149	159	135	143	157	167	140	148	162	173
	1600	MBh	45.3	46.3	49.5	52.9	44.2	45.2	48.3	51.6	43.2	44.1	47.2	50.4	42.1	43.1	**46.0**	49.2	40.0	40.9	43.7	46.7	37.1	37.9	40.5	43.3
		S/T	0.92	0.86	0.70	0.53	0.95	0.90	0.73	0.54	0.98	0.92	0.75	0.56	1.00	0.95	**0.77**	0.58	1.00	0.98	0.80	0.60	1.00	0.99	0.81	0.60
		Δ T	24	23	20	16	24	23	20	16	24	23	20	16	24	23	**20**	16	23	23	20	16	21	22	19	15
		kW	3.01	3.08	3.17	3.27	3.24	3.31	3.42	3.53	3.45	3.52	3.63	3.75	3.62	3.70	**3.83**	3.95	3.78	3.86	3.99	4.12	3.91	3.99	4.13	4.27
		Amps	13.0	13.2	13.6	14.1	13.9	14.2	14.6	15.1	15.0	15.3	15.8	16.3	15.9	16.3	**16.8**	17.3	16.8	17.2	17.7	18.4	17.7	18.1	18.7	19.4
		HI PR	245	263	278	290	274	295	312	325	312	336	355	370	356	383	**404**	421	400	430	455	474	442	476	502	524
		LO PR	110	118	128	137	117	124	136	144	121	129	141	150	127	136	**148**	158	134	142	155	165	138	147	160	171
	1402	MBh	41.8	42.7	45.6	48.8	40.8	41.7	44.6	47.7	39.9	40.7	43.5	46.5	38.9	39.7	42.5	45.4	36.9	37.8	40.3	43.1	34.2	35.0	37.4	39.9
		S/T	0.89	0.83	0.68	0.51	0.92	0.86	0.70	0.53	0.94	0.89	0.72	0.54	0.97	0.91	0.74	0.56	1.01	0.95	0.77	0.58	1.02	0.96	0.78	0.58
		Δ T	24	23	20	16	25	24	21	16	25	24	21	16	25	24	21	17	24	23	20	16	23	22	19	15
		kW	2.94	3.00	3.10	3.19	3.16	3.23	3.33	3.44	3.36	3.43	3.54	3.66	3.53	3.61	3.73	3.85	3.68	3.76	3.89	4.02	3.81	3.89	4.02	4.16
		Amps	12.7	12.9	13.3	13.7	13.6	13.9	14.3	14.7	14.6	14.9	15.4	15.9	15.5	15.8	16.3	16.9	16.4	16.8	17.3	17.9	17.3	17.7	18.2	18.9
		HI PR	237	255	270	281	266	286	303	316	303	326	344	359	345	371	392	409	388	417	441	460	429	461	487	508
		LO PR	107	114	124	133	113	120	132	140	118	125	137	146	124	132	144	153	130	138	150	160	134	143	156	166
85	1798	MBh	47.5	48.4	50.7	54.1	46.4	47.3	49.5	52.8	45.3	46.1	48.3	51.6	44.2	45.0	47.1	50.3	42.0	42.8	44.8	47.8	38.9	39.6	41.5	44.3
		S/T	1.00	0.98	0.88	0.72	1.00	1.00	0.91	0.74	1.00	1.00	0.94	0.76	1.00	1.00	0.97	0.78	1.00	1.00	1.00	0.81	1.00	1.00	1.00	0.82
		Δ T	24	24	23	20	24	24	23	20	23	24	23	20	23	23	23	20	21	22	23	20	20	20	21	19
		kW	3.06	3.13	3.22	3.33	3.29	3.37	3.47	3.59	3.50	3.58	3.69	3.82	3.68	3.77	3.89	4.02	3.84	3.92	4.05	4.19	3.97	4.06	4.20	4.34
		Amps	13.2	13.5	13.9	14.3	14.1	14.4	14.9	15.4	15.2	15.6	16.0	16.6	16.2	16.5	17.0	17.6	17.1	17.5	18.0	18.7	18.0	18.5	19.0	19.7
		HI PR	250	269	284	296	280	301	318	332	318	343	362	377	363	390	412	430	408	439	464	484	451	485	512	534
		LO PR	113	120	131	139	119	127	138	147	124	132	144	153	130	138	151	161	136	145	158	169	141	150	164	174
	1600	MBh	46.1	47.0	49.2	52.5	45.0	45.9	48.1	51.3	43.9	44.8	46.9	50.1	42.9	43.7	45.8	48.8	40.7	41.5	43.5	46.4	37.7	38.5	40.3	43.0
		S/T	0.97	0.93	0.84	0.68	1.00	0.97	0.87	0.71	1.00	0.99	0.89	0.73	1.00	1.00	0.92	0.75	1.00	1.00	0.96	0.78	1.00	1.00	0.97	0.78
		Δ T	26	25	24	21	26	25	24	21	25	25	24	21	25	25	24	21	23	24	24	21	22	22	22	19
		kW	3.04	3.10	3.20	3.30	3.27	3.34	3.45	3.56	3.47	3.55	3.66	3.78	3.65	3.73	3.86	3.99	3.81	3.89	4.02	4.16	3.94	4.03	4.16	4.30
		Amps	13.1	13.4	13.7	14.2	14.0	14.3	14.7	15.2	15.1	15.4	15.9	16.4	16.0	16.4	16.9	17.5	17.0	17.4	17.9	18.5	17.9	18.3	18.9	19.5
		HI PR	247	266	281	293	277	298	315	329	315	339	358	374	359	386	408	426	404	435	459	479	446	480	507	529
		LO PR	112	119	130	138	118	125	137	146	123	130	142	152	129	137	149	159	135	143	157	167	140	148	162	173
	1402	MBh	42.5	43.4	45.4	48.5	41.5	42.4	44.4	47.3	40.6	41.3	43.3	46.2	39.6	40.3	42.2	45.1	37.6	38.3	40.1	42.8	34.8	35.5	37.2	39.7
		S/T	0.93	0.90	0.81	0.66	0.96	0.93	0.84	0.68	0.99	0.95	0.86	0.70	1.00	0.99	0.89	0.72	1.00	1.00	0.92	0.75	1.00	1.00	0.93	0.76
		Δ T	26	26	24	21	26	26	24	21	26	26	24	21	26	26	25	21	25	25	24	21	23	23	23	20
		kW	2.96	3.03	3.12	3.22	3.19	3.26	3.36	3.47	3.39	3.46	3.57	3.69	3.56	3.64	3.76	3.89	3.71	3.79	3.92	4.05	3.84	3.93	4.06	4.19
		Amps	12.8	13.0	13.4	13.9	13.7	14.0	14.4	14.9	14.7	15.0	15.5	16.0	15.6	16.0	16.5	17.0	16.5	16.9	17.4	18.0	17.4	17.8	18.4	19.0
		HI PR	240	258	272	284	269	289	306	319	306	329	348	362	348	375	396	413	392	422	445	464	433	466	492	513
		LO PR	108	115	126	134	114	122	133	141	119	126	138	147	125	133	145	154	131	139	152	162	135	144	157	167

IDB = Entering Indoor Dry Bulb Temperature

High and low pressures are measured at the liquid and suction access fittings.

Shaded area reflects AHRI (TVA) conditions

KW = Total system power

Amps: Unit amps (comp.+ evaporator + condenser fan motors)

Expanded Cooling Data — APH1460H41**

			Outdoor Ambient Temperature																							
			65				75				85				95				105				115			
			Entering Indoor Wet Bulb Temperature																							
IDB	Airflow		59	63	67	71	59	63	67	71	59	63	67	71	59	63	67	71	59	63	67	71	59	63	67	71
70	1798	MBh	55.9	57.9	63.4	-	54.6	56.5	62.0	-	53.3	55.2	60.5	-	52.0	53.9	59.0	-	49.4	51.2	56.1	-	45.7	47.4	51.9	-
		S/T	0.71	0.59	0.41	-	0.74	0.62	0.43	-	0.76	0.63	0.44	-	0.78	0.65	0.45	-	0.81	0.68	0.47	-	0.82	0.68	0.47	-
		Δ T	20	18	13	-	21	18	14	-	21	18	14	-	21	18	14	-	20	18	13	-	19	17	13	-
		kW	3.69	3.77	3.90	-	3.99	4.08	4.22	-	4.25	4.35	4.49	-	4.48	4.58	4.74	-	4.68	4.79	4.95	-	4.85	4.96	5.13	-
		Amps	15.6	15.9	16.4	-	16.8	17.1	17.7	-	18.1	18.5	19.1	-	19.3	19.7	20.4	-	20.5	20.9	21.6	-	21.6	22.1	22.8	-
		HI PR	237	255	269	-	266	286	302	-	302	325	343	-	344	370	391	-	387	417	440	-	428	460	486	-
		LO PR	107	114	124	-	113	120	131	-	118	125	137	-	124	131	144	-	130	138	150	-	134	143	156	-
	1600	MBh	54.2	56.2	61.6	-	53.0	54.9	60.1	-	51.7	53.6	58.7	-	50.4	52.3	57.3	-	47.9	49.7	54.4	-	44.4	46.0	50.4	-
		S/T	0.68	0.57	0.39	-	0.70	0.59	0.41	-	0.72	0.60	0.42	-	0.74	0.62	0.43	-	0.77	0.65	0.45	-	0.78	0.65	0.45	-
		Δ T	21	18	14	-	21	19	14	-	21	19	14	-	22	19	14	-	21	18	14	-	20	17	13	-
		kW	3.66	3.74	3.87	-	3.96	4.04	4.18	-	4.22	4.31	4.46	-	4.44	4.55	4.70	-	4.64	4.75	4.91	-	4.81	4.92	5.09	-
		Amps	15.5	15.8	16.3	-	16.6	17.0	17.5	-	18.0	18.4	18.9	-	19.1	19.6	20.2	-	20.3	20.8	21.4	-	21.4	21.9	22.6	-
		HI PR	234	252	266	-	263	283	299	-	299	322	340	-	341	367	387	-	383	412	435	-	423	456	481	-
		LO PR	106	113	123	-	112	119	130	-	116	124	135	-	122	130	142	-	128	136	149	-	133	141	154	-
	1402	MBh	50.1	51.9	56.8	-	48.9	50.7	55.5	-	47.7	49.5	54.2	-	46.6	48.3	52.9	-	44.2	45.8	50.2	-	41.0	42.5	46.5	-
		S/T	0.65	0.55	0.38	-	0.68	0.57	0.39	-	0.70	0.58	0.40	-	0.72	0.60	0.42	-	0.75	0.62	0.43	-	0.75	0.63	0.43	-
		Δ T	21	19	14	-	22	19	14	-	22	19	14	-	22	19	14	-	22	19	14	-	20	17	13	-
		kW	3.57	3.65	3.77	-	3.86	3.94	4.07	-	4.11	4.20	4.34	-	4.33	4.43	4.58	-	4.52	4.62	4.78	-	4.68	4.79	4.95	-
		Amps	15.1	15.4	15.9	-	16.2	16.6	17.1	-	17.5	17.9	18.5	-	18.6	19.1	19.7	-	19.8	20.2	20.8	-	20.9	21.3	22.0	-
		HI PR	227	245	258	-	255	275	290	-	290	312	330	-	330	356	375	-	372	400	422	-	411	442	467	-
		LO PR	103	109	120	-	109	116	126	-	113	120	131	-	119	126	138	-	124	132	144	-	129	137	149	-
75	1798	MBh	56.8	58.5	63.3	67.9	55.5	57.1	61.8	66.4	54.2	55.8	60.4	64.8	52.8	54.4	58.9	63.2	50.2	51.7	55.9	60.0	46.5	47.9	51.8	55.6
		S/T	0.81	0.72	0.55	0.35	0.84	0.75	0.57	0.37	0.86	0.77	0.58	0.37	0.89	0.79	0.60	0.39	0.92	0.82	0.62	0.40	0.93	0.83	0.63	0.40
		Δ T	24	22	18	12	24	22	18	12	24	22	18	12	24	22	18	12	24	22	18	12	22	20	17	12
		kW	3.72	3.81	3.93	4.06	4.02	4.11	4.25	4.40	4.29	4.39	4.53	4.69	4.52	4.63	4.78	4.95	4.72	4.83	4.99	5.17	4.89	5.00	5.18	5.36
		Amps	15.7	16.1	16.6	17.1	16.9	17.3	17.8	18.4	18.3	18.7	19.3	20.0	19.5	19.9	20.5	21.3	20.6	21.1	21.8	22.6	21.8	22.3	23.0	23.9
		HI PR	239	257	272	283	268	289	305	318	305	328	347	362	348	374	395	412	391	421	444	463	432	465	491	512
		LO PR	108	115	126	134	114	122	133	141	119	126	138	147	125	133	145	154	131	139	152	162	135	144	157	167
	1600	MBh	55.1	56.8	61.5	66.0	53.9	55.5	60.0	64.4	52.6	54.1	58.6	62.9	51.3	**52.8**	57.2	61.4	48.7	50.2	54.3	58.3	45.1	46.5	50.3	54.0
		S/T	0.77	0.69	0.52	0.34	0.80	0.72	0.54	0.35	0.82	0.73	0.56	0.36	0.85	**0.76**	0.57	0.37	0.88	0.79	0.59	0.38	0.89	0.79	0.60	0.39
		Δ T	24	23	18	13	25	23	19	13	25	23	19	13	25	**23**	19	13	25	23	19	13	23	21	17	12
		kW	3.69	3.78	3.90	4.03	3.99	4.08	4.22	4.36	4.25	4.35	4.50	4.65	4.48	**4.59**	4.74	4.91	4.68	4.79	4.95	5.12	4.85	4.96	5.13	5.31
		Amps	15.6	15.9	16.4	17.0	16.8	17.1	17.7	18.3	18.1	18.5	19.1	19.8	19.3	**19.7**	20.4	21.1	20.5	20.9	21.6	22.4	21.6	22.1	22.8	23.7
		HI PR	237	255	269	281	266	286	302	315	302	325	343	358	344	**370**	391	408	387	417	440	459	428	460	486	507
		LO PR	107	114	124	133	113	120	131	140	118	125	137	146	124	**131**	144	153	130	138	150	160	134	143	156	166
	1402	MBh	50.9	52.4	56.7	60.9	49.7	51.2	55.4	59.5	48.5	50.0	54.1	58.1	47.3	48.8	52.8	56.6	45.0	46.3	50.1	53.8	41.7	42.9	46.4	49.8
		S/T	0.74	0.67	0.50	0.32	0.77	0.69	0.52	0.34	0.79	0.71	0.54	0.34	0.82	0.73	0.55	0.36	0.85	0.76	0.57	0.37	0.85	0.76	0.58	0.37
		Δ T	25	23	19	13	25	23	19	13	25	23	19	13	25	23	19	13	25	23	19	13	23	22	18	12
		kW	3.60	3.68	3.80	3.93	3.89	3.98	4.11	4.25	4.14	4.24	4.38	4.53	4.37	4.47	4.62	4.78	4.56	4.66	4.82	4.99	4.72	4.83	5.00	5.17
		Amps	15.2	15.5	16.0	16.6	16.3	16.7	17.2	17.8	17.7	18.1	18.6	19.3	18.8	19.2	19.8	20.5	19.9	20.4	21.0	21.8	21.0	21.5	22.2	23.0
		HI PR	230	247	261	272	258	277	293	305	293	315	333	347	334	359	379	396	376	404	427	445	415	447	471	492
		LO PR	104	111	121	129	110	117	128	136	114	121	133	141	120	128	139	148	126	134	146	155	130	138	151	161

IDB = Entering Indoor Dry Bulb Temperature

High and low pressures are measured at the liquid and suction access fittings.

Shaded area reflects ACCA (TVA) conditions

KW = Total system power

Amps: Unit amps (comp.+ evaporator + condenser fan motors)

Expanded Cooling Data — APH1460H41** (cont.)

			Outdoor Ambient Temperature																							
			65				75				85				95				105				115			
			Entering Indoor Wet Bulb Temperature																							
IDB	Airflow		59	63	67	71	59	63	67	71	59	63	67	71	59	63	67	71	59	63	67	71	59	63	67	71
80	1798	MBh	57.8	59.1	63.1	67.5	56.5	57.7	61.6	65.9	55.1	56.3	60.2	64.3	53.8	55.0	58.7	62.8	51.1	52.2	55.8	59.6	47.3	48.4	51.7	55.2
		S/T	0.89	0.83	0.68	0.51	0.92	0.86	0.70	0.52	0.94	0.88	0.72	0.54	1.00	0.91	0.74	0.56	1.00	0.95	0.77	0.58	1.00	0.96	0.78	0.58
		Δ T	26	25	22	17	27	25	22	18	27	25	22	18	27	26	22	18	26	25	22	18	24	24	21	16
		kW	3.76	3.84	3.97	4.10	4.06	4.15	4.29	4.43	4.33	4.42	4.57	4.73	4.56	4.67	4.83	4.99	4.76	4.87	5.04	5.22	4.93	5.05	5.22	5.41
		Amps	15.9	16.2	16.7	17.3	17.0	17.4	18.0	18.6	18.4	18.9	19.4	20.1	19.6	20.1	20.7	21.5	20.8	21.3	22.0	22.8	22.0	22.5	23.2	24.1
		HI PR	242	260	274	286	271	292	308	321	308	332	350	365	351	378	399	416	395	425	449	468	436	470	496	517
		LO PR	109	116	127	135	116	123	134	143	120	128	139	148	126	134	146	156	132	141	153	163	137	145	159	169
	1600	MBh	56.1	57.4	61.3	65.5	54.8	56.0	59.9	64.0	53.5	54.7	58.4	62.5	52.2	53.4	**57.0**	60.9	49.6	50.7	54.2	57.9	45.9	46.9	50.2	53.6
		S/T	0.85	0.79	0.65	0.48	0.88	0.82	0.67	0.50	0.90	0.84	0.69	0.51	0.93	0.87	**0.71**	0.53	0.96	0.90	0.74	0.55	0.97	0.91	0.74	0.55
		Δ T	27	26	23	18	28	26	23	18	28	27	23	18	28	27	**23**	19	27	26	23	18	26	25	21	17
		kW	3.72	3.81	3.93	4.06	4.02	4.11	4.25	4.40	4.29	4.39	4.53	4.69	4.52	4.63	**4.78**	4.95	4.72	4.83	5.00	5.17	4.89	5.01	5.18	5.36
		Amps	15.7	16.1	16.6	17.1	16.9	17.3	17.8	18.4	18.3	18.7	19.3	20.0	19.5	19.9	**20.5**	21.3	20.6	21.1	21.8	22.6	21.8	22.3	23.0	23.9
		HI PR	239	257	272	283	268	289	305	318	305	328	347	362	348	374	**395**	412	391	421	444	463	432	465	491	512
		LO PR	108	115	126	134	114	122	133	141	119	126	138	147	125	133	**145**	154	131	139	152	162	135	144	157	167
	1402	MBh	51.8	52.9	56.6	60.5	50.6	51.7	55.2	59.1	49.4	50.5	53.9	57.6	48.2	49.2	52.6	56.2	45.8	46.8	50.0	53.4	42.4	43.3	46.3	49.5
		S/T	0.82	0.77	0.62	0.47	0.85	0.79	0.65	0.48	0.87	0.81	0.66	0.49	0.90	0.84	0.68	0.51	0.93	0.87	0.71	0.53	0.94	0.88	0.72	0.53
		Δ T	28	27	23	18	28	27	23	19	28	27	23	19	28	27	24	19	28	27	23	19	26	25	22	17
		kW	3.63	3.71	3.83	3.96	3.92	4.01	4.14	4.28	4.18	4.27	4.42	4.57	4.41	4.51	4.66	4.82	4.60	4.70	4.86	5.03	4.76	4.87	5.04	5.22
		Amps	15.3	15.7	16.1	16.7	16.5	16.8	17.4	18.0	17.8	18.2	18.8	19.4	19.0	19.4	20.0	20.7	20.1	20.6	21.2	22.0	21.2	21.7	22.4	23.2
		HI PR	232	250	264	275	260	280	296	309	296	319	336	351	337	363	383	400	379	408	431	450	419	451	476	497
		LO PR	105	112	122	130	111	118	129	137	115	123	134	143	121	129	141	150	127	135	147	157	131	140	152	162
85	1798	MBh	58.8	60.0	62.8	67.0	57.5	58.6	61.3	65.4	56.1	57.2	59.9	63.9	54.7	55.8	58.4	62.3	52.0	53.0	55.5	59.2	48.2	49.1	51.4	54.8
		S/T	0.93	0.90	0.81	0.66	0.96	0.93	0.84	0.68	0.99	0.95	0.86	0.70	1.00	0.99	0.89	0.72	1.00	1.00	0.92	0.75	1.00	1.00	0.93	0.75
		Δ T	28	28	26	23	28	28	26	23	28	28	26	23	28	28	27	23	27	27	26	23	25	25	24	21
		kW	3.79	3.87	4.00	4.13	4.09	4.18	4.32	4.47	4.36	4.46	4.61	4.77	4.60	4.71	4.87	5.04	4.80	4.91	5.08	5.26	4.98	5.09	5.27	5.45
		Amps	16.0	16.3	16.8	17.4	17.2	17.6	18.1	18.8	18.6	19.0	19.6	20.3	19.8	20.3	20.9	21.7	21.0	21.5	22.2	23.0	22.2	22.7	23.5	24.3
		HI PR	244	263	277	289	274	295	311	324	311	335	354	369	355	382	403	420	399	429	453	473	441	474	501	522
		LO PR	110	117	128	137	117	124	135	144	121	129	141	150	127	135	148	158	133	142	155	165	138	147	160	171
	1600	MBh	57.1	58.2	61.0	65.0	55.8	56.9	59.6	63.5	54.5	55.5	58.1	62.0	53.1	54.2	56.7	60.5	50.5	51.4	53.9	57.5	46.7	47.7	49.9	53.2
		S/T	0.89	0.86	0.77	0.63	0.92	0.89	0.80	0.65	0.94	0.91	0.82	0.67	0.97	0.94	0.85	0.69	1.00	0.98	0.88	0.71	1.00	0.98	0.89	0.72
		Δ T	29	29	27	23	29	29	27	24	30	29	27	24	30	29	28	24	29	29	27	24	27	27	25	22
		kW	3.76	3.84	3.97	4.10	4.06	4.15	4.29	4.43	4.33	4.42	4.57	4.73	4.56	4.67	4.83	4.99	4.76	4.87	5.04	5.22	4.93	5.05	5.22	5.41
		Amps	15.9	16.2	16.7	17.3	17.0	17.4	18.0	18.6	18.4	18.9	19.4	20.1	19.6	20.1	20.7	21.5	20.8	21.3	22.0	22.8	22.0	22.5	23.2	24.1
		HI PR	242	260	274	286	271	292	308	321	308	332	350	365	351	378	399	416	395	425	449	468	436	470	496	517
		LO PR	109	116	127	135	116	123	134	143	120	128	139	148	126	134	146	156	132	141	153	163	137	145	159	169
	1402	MBh	52.7	53.7	56.3	60.0	51.5	52.5	55.0	58.6	50.3	51.2	53.7	57.2	49.0	50.0	52.3	55.8	46.6	47.5	49.7	53.1	43.1	44.0	46.1	49.1
		S/T	0.86	0.83	0.75	0.60	0.89	0.86	0.77	0.63	0.91	0.88	0.79	0.64	0.94	0.91	0.82	0.66	0.97	0.94	0.85	0.69	0.98	0.95	0.86	0.69
		Δ T	30	29	27	24	30	29	28	24	30	29	28	24	30	30	28	24	30	29	28	24	28	27	26	22
		kW	3.66	3.74	3.87	3.99	3.96	4.04	4.18	4.32	4.21	4.31	4.46	4.61	4.44	4.54	4.70	4.86	4.64	4.74	4.91	5.08	4.81	4.92	5.09	5.26
		Amps	15.5	15.8	16.3	16.8	16.6	17.0	17.5	18.1	18.0	18.4	18.9	19.6	19.1	19.6	20.2	20.9	20.3	20.7	21.4	22.2	21.4	21.9	22.6	23.4
		HI PR	234	252	266	278	263	283	299	312	299	322	340	354	341	366	387	404	383	412	435	454	423	456	481	502
		LO PR	106	113	123	131	112	119	130	139	116	124	135	144	122	130	142	151	128	136	149	159	133	141	154	164

IDB = Entering Indoor Dry Bulb Temperature

High and low pressures are measured at the liquid and suction access fittings.

Shaded area reflects AHRI (TVA) conditions

KW = Total system power

Amps: Unit amps (comp.+ evaporator + condenser fan motors)

APH1424H41**

	Outdoor Ambient Temperature																	
	65	60	55	50	47	45	40	35	30	25	20	17	15	10	5	0	-5	-10
MBh	28.7	27.1	25.5	23.9	22.8	22.1	20.5	18.9	16.2	15.0	13.8	13.0	12.5	11.2	10.0	8.7	7.4	6.1
T/R	31.2	29.6	27.8	26.0	24.8	24.1	22.4	20.6	17.6	16.3	15.0	14.2	13.6	12.2	10.8	9.5	8.1	6.6
kW	1.86	1.82	1.78	1.75	1.73	1.71	1.67	1.63	1.65	1.61	1.58	1.55	1.54	1.50	1.46	1.42	1.38	1.34
Amps	9.1	8.4	7.9	7.5	7.2	7.1	6.7	6.4	6.2	5.9	5.6	5.5	5.5	5.2	4.9	4.6	4.3	3.9
COP	4.51	4.36	4.19	4.00	3.87	3.78	3.59	3.39	2.87	2.71	2.56	2.45	2.38	2.19	2.00	1.79	1.57	1.32
EER	15.4	14.9	14.3	13.7	13.2	12.9	12.3	11.6	9.8	9.3	8.7	8.4	8.1	7.5	6.8	6.1	5.4	4.5
HI PR	367	352	338	324	316	310	298	286	274	262	251	245	241	232	223	214	206	199
LO PR	142	132	123	113	107	103	95	84	76	68	60	56	54	45	39	33	29	23

APH1430H41**

	Outdoor Ambient Temperature																	
	65	60	55	50	47	45	40	35	30	25	20	17	15	10	5	0	-5	-10
MBh	34.7	32.8	30.9	28.9	27.6	26.7	24.8	22.9	19.2	17.7	16.3	15.4	14.8	13.3	11.8	10.3	8.8	7.2
T/R	30.6	29.0	27.3	25.5	24.3	23.6	21.9	20.2	16.9	15.6	14.4	13.6	13.1	11.7	10.4	9.1	7.7	6.3
kW	2.26	2.22	2.17	2.13	2.10	2.08	2.04	1.99	1.98	1.93	1.89	1.86	1.84	1.79	1.75	1.70	1.66	1.61
Amps	11.0	10.3	9.7	9.1	8.8	8.7	8.2	7.8	7.5	7.2	6.9	6.8	6.7	6.4	6.0	5.7	5.3	4.9
COP	4.48	4.33	4.16	3.97	3.84	3.76	3.56	3.36	2.84	2.68	2.53	2.42	2.36	2.17	1.97	1.77	1.55	1.30
EER	15.3	14.8	14.2	13.6	13.1	12.8	12.2	11.5	9.7	9.2	8.6	8.3	8.1	7.4	6.7	6.0	5.3	4.5
HI PR	374	359	345	330	322	316	304	291	279	267	256	250	245	236	227	218	210	203
LO PR	134	124	117	107	101	97	89	80	72	64	56	52	51	43	37	31	27	21

APH1436H41**

	Outdoor Ambient Temperature																	
	65	60	55	50	47	45	40	35	30	25	20	17	15	10	5	0	-5	-10
MBh	41.5	39.3	37.0	34.6	33.0	32.0	29.7	27.4	26.9	24.8	22.9	21.6	20.8	18.7	16.5	14.4	12.3	10.1
T/R	32.0	30.3	28.5	26.7	25.5	24.7	22.9	21.1	20.8	19.2	17.7	16.7	16.1	14.4	12.8	11.1	9.5	7.8
kW	2.74	2.68	2.63	2.57	2.54	2.52	2.47	2.41	2.64	2.58	2.52	2.48	2.46	2.39	2.33	2.27	2.21	2.15
Amps	13.5	12.6	11.9	11.2	10.9	10.7	10.1	9.7	9.3	8.9	8.5	8.4	8.3	7.9	7.4	7.1	6.6	6.1
COP	4.44	4.29	4.12	3.93	3.80	3.71	3.52	3.32	2.98	2.82	2.66	2.55	2.48	2.28	2.08	1.86	1.63	1.37
EER	15.2	14.6	14.1	13.4	13.0	12.7	12.0	11.4	10.2	9.6	9.1	8.7	8.5	7.8	7.1	6.4	5.6	4.7
HI PR	367	352	338	323	316	310	298	286	274	262	251	245	241	232	223	214	206	199
LO PR	135	125	117	108	102	98	90	80	72	65	57	53	51	43	37	31	27	21

Above information is for nominal CFM and 70 degree indoor dry bulb. Instantaneous capacity listed.

kW = Total system power

High pressure is measured at the liquid line access fitting.

Low pressure is measured at the compressor suction access fitting.

Amps: Unit amps (comp.+ evaporator motor + condenser fan motor)

APH1442H41**

	Outdoor Ambient Temperature																	
	65	60	55	50	47	45	40	35	30	25	20	17	15	10	5	0	-5	-10
MBh	47.1	44.6	42.0	39.3	37.5	36.3	33.8	31.1	26.7	24.6	22.7	21.4	20.6	18.5	16.4	14.3	12.2	10.0
T/R	33.6	31.8	29.9	28.0	26.7	25.9	24.0	22.2	19.0	17.5	16.1	15.2	14.7	13.2	11.7	10.2	8.7	7.1
kW	3.07	3.01	2.95	2.89	2.85	2.83	2.77	2.71	2.39	2.33	2.28	2.25	2.23	2.18	2.12	2.07	2.02	1.97
Amps	12.5	11.6	10.9	10.3	9.9	9.8	9.2	8.8	8.4	8.1	7.7	7.5	7.5	7.1	6.7	6.3	5.9	5.3
COP	4.50	4.34	4.17	3.98	3.85	3.76	3.57	3.36	3.27	3.09	2.91	2.78	2.71	2.49	2.26	2.02	1.77	1.49
EER	15.4	14.8	14.2	13.6	13.1	12.9	12.2	11.5	11.2	10.5	9.9	9.5	9.2	8.5	7.7	6.9	6.0	5.1
HI PR	370	355	341	326	319	313	301	288	276	264	253	247	243	234	225	215	208	200
LO PR	137	127	119	109	103	99	91	81	73	65	58	54	52	44	38	32	28	22

APH1448H41**

	Outdoor Ambient Temperature																	
	65	60	55	50	47	45	40	35	30	25	20	17	15	10	5	0	-5	-10
MBh	56.6	53.6	50.4	47.1	45.0	43.6	40.5	37.4	32.4	29.9	27.5	26.0	25.0	22.5	19.9	17.4	14.8	12.1
T/R	32.7	31.0	29.2	27.3	26.0	25.2	23.4	21.6	18.7	17.3	15.9	15.0	14.5	13.0	11.5	10.1	8.6	7.0
kW	3.61	3.54	3.47	3.40	3.36	3.33	3.26	3.19	3.17	3.10	3.03	2.99	2.96	2.89	2.82	2.75	2.67	2.60
Amps	18.5	17.2	16.2	15.4	14.9	14.6	13.8	13.2	12.7	12.2	11.7	11.5	11.3	10.8	10.2	9.7	9.1	8.3
COP	4.59	4.43	4.25	4.06	3.92	3.84	3.64	3.43	2.99	2.82	2.66	2.55	2.48	2.28	2.07	1.85	1.62	1.37
EER	15.7	15.1	14.5	13.9	13.4	13.1	12.4	11.7	10.2	9.6	9.1	8.7	8.5	7.8	7.1	6.3	5.5	4.7
HI PR	383	368	353	338	330	324	311	299	286	273	262	256	251	242	233	223	215	208
LO PR	135	126	118	108	102	98	90	80	73	65	57	53	51	43	37	31	27	22

APH1460H41**

	Outdoor Ambient Temperature																	
	65	60	55	50	47	45	40	35	30	25	20	17	15	10	5	0	-5	-10
MBh	68.5	64.9	61.0	57.1	54.5	52.8	49.1	45.2	42.1	38.9	35.8	33.8	32.5	29.2	25.9	22.6	19.3	15.8
T/R	39.6	37.5	35.3	33.0	31.5	30.6	28.4	26.2	24.4	22.5	20.7	19.6	18.8	16.9	15.0	13.1	11.1	9.1
kW	4.76	4.67	4.57	4.47	4.41	4.37	4.28	4.18	4.08	3.98	3.88	3.83	3.79	3.69	3.59	3.50	3.40	3.30
Amps	23.9	22.2	20.9	19.7	19.0	18.7	17.7	16.8	16.1	15.4	14.8	14.4	14.2	13.6	12.7	12.0	11.2	10.2
COP	4.21	4.07	3.91	3.74	3.61	3.54	3.36	3.17	3.02	2.86	2.70	2.58	2.51	2.32	2.11	1.89	1.66	1.40
EER	14.4	13.9	13.4	12.8	12.3	12.1	11.5	10.8	10.3	9.8	9.2	8.8	8.6	7.9	7.2	6.5	5.7	4.8
HI PR	407	390	375	358	350	343	330	317	303	290	278	272	267	257	247	237	228	220
LO PR	130	121	113	104	98	94	87	77	70	62	55	51	49	41	36	30	26	21

Above information is for nominal CFM and 70 degree indoor dry bulb. Instantaneous capacity listed.

kW = Total system power

High pressure is measured at the liquid line access fitting.

Low pressure is measured at the compressor suction access fitting.

Amps: Unit amps (comp.+ evaporator motor + condenser fan motor)

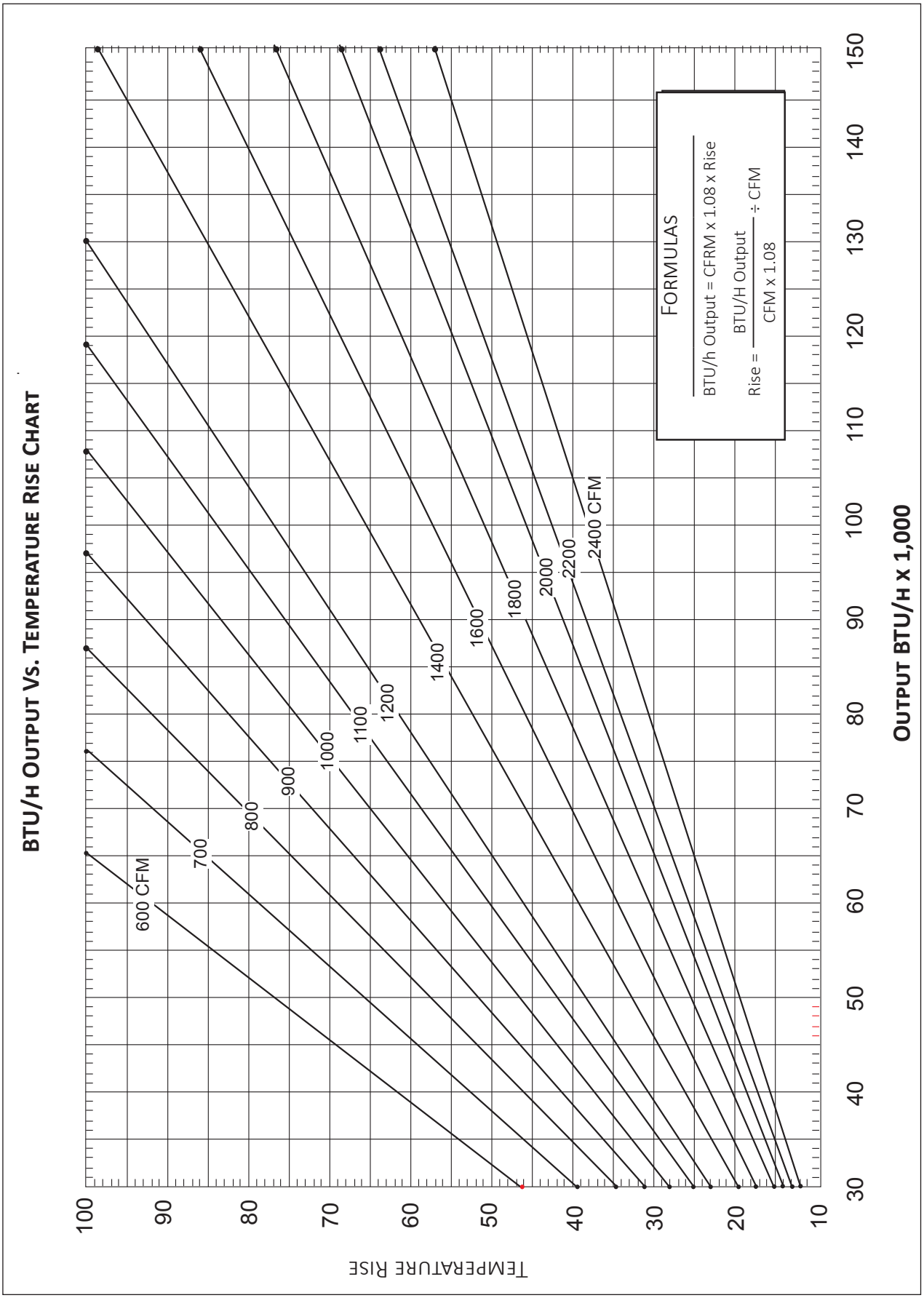
BTU/h Output Vs. Temperature Rise Chart
Temperature Rise
Output BTU/h x 1,000
600 CFM
700
800
900
1000
1100
1200
1400
1600
1800
2000
2200
2400 CFM
Formulas
BTU/h Output = CFRM x 1.08 x Rise
Rise = BTU/H Output / CFM x 1.08 ÷ CFM

Model	Speed*	Volts		E.S.P. (In. of H2O)							
				0.10	0.20	0.30	0.40	0.50	0.60	0.70	0.80
APH14 24H41**	T1	230	CFM	914	866	818	770	722	674	626	578
			Watts	69	80	91	102	114	125	136	147
	T2,T3	230	CFM	914	866	818	770	722	674	626	578
			Watts	69	80	91	102	114	125	136	147
	T4, T5	230	CFM	1,231	1,179	1,127	1,074	1,022	969	917	865
			Watts	168	180	193	205	218	230	243	255
APH14 30H41**	T1	230	CFM	1,005	961	918	874	831	787	744	700
			Watts	91	102	114	125	137	149	160	172
	T2,T3	230	CFM	1,110	1,067	1,023	980	936	893	849	806
			Watts	120	132	144	155	167	178	190	202
	T4, T5	230	CFM	1,462	1,409	1,357	1,305	1,252	1,200	1,147	1,095
			Watts	241	253	266	278	291	303	315	328
APH14 36H41**	T1	230	CFM	1,151	1,097	1,042	988	933	879	824	770
			Watts	132	144	156	169	181	194	206	219
	T2,T3	230	CFM	1,261	1,215	1,169	1,123	1,076	1,030	984	937
			Watts	131	144	157	169	182	194	207	220
	T4, T5	230	CFM	1,577	1,525	1,472	1,420	1,367	1,315	1,263	1,210
			Watts	277	290	302	314	327	339	352	364
APH14 42H41**	T1	230	CFM	1,165	1,122	1,080	1,037	995	953	910	868
			Watts	118	130	142	154	166	178	190	202
	T2,T3	230	CFM	1,365	1,322	1,280	1,237	1,195	1,153	1,110	1,068
			Watts	188	200	212	224	236	248	260	272
	T4, T5	230	CFM	1,645	1,602	1,560	1,517	1,475	1,433	1,390	1,348
			Watts	285	297	309	321	333	346	358	370
APH14 48H41E*	T1	230	CFM	1,337	1,297	1,218	1,155	1,118	1,088	1,022	989
			Watts	179	190	203	210	225	243	249	268
	T2,T3	230	CFM	1,711	1,640	1,605	1,537	1,496	1,441	1,397	1,347
			Watts	330	341	358	370	377	394	408	418
	T4, T5	230	CFM	2,002	1,935	1,885	1,827	1,767	1,732	1,669	1,618
			Watts	498	521	516	534	551	567	571	574
APH14 60H41**	T1	230	CFM	1,507	1,459	1,410	1,362	1,314	1,266	1,218	1,169
			Watts	168	175	183	191	199	207	214	222
	T2,T3	230	CFM	1,793	1,745	1,697	1,649	1,600	1,552	1,504	1,456
			Watts	363	371	379	387	394	402	410	418
	T4, T5	230	CFM	1,919	1,870	1,822	1,774	1,726	1,678	1,629	1,581
			Watts	449	457	465	472	480	488	496	503

* Speed set at T2 at factory.

Model and Heat Kit Usage	Circuit #1		Circuit #2		Single-Point Kit		Actual kW / BTU@ 240V
	MCA[1]	MOP[2]	MCA[1]	MOP[2]	MCA[1]	MOP[2]	
APH1424H41D*	1.9	---	---	---	--	--	---
HKR-05*, HKR-05C*	21 / 25	25 / 25	---	---	46	50	4.75 / 16,200
HKR-08*, HKR-08C*	32 / 36	35 / 40	---	---	57	60	7 / 23,800
HKR-10*, HKR-10C*	43 / 49	45 / 50	---	---	70	80	9.5 / 32,400
APH1430H41**	2.3	---	---	---	--	--	---
HKR-05*, HKR-05C*	21 / 25	25 / 25	---	---	47	50	4.75 / 16,200
HKR-08*, HKR-08C*	32 / 36	35 / 40	---	---	59	60	7 / 23,800
HKR-10*, HKR-10C*	43 / 49	45 / 50	---	---	72	80	9.5 / 32,400
HKP-15C*	43 / 49	45 / 50	21 / 25	25 / 25	97	100	14.25 / 48,600
APH1436H41**	2.3	---	---	---	--	--	---
HKR-05*, HKR-05C*	21 / 25	25 / 25	---	---	51	60	4.75 / 16,200
HKR-08*, HKR-08C*	32 / 36	35 / 40	---	---	62.7	70	7 / 23,800
HKR-10*, HKR-10C*	43 / 49	45 / 50	---	---	75.8	80	9.5 / 32,400
HKP-15C*	43 / 49	45 / 50	21 / 25	25 / 25	100.5	110	14.25 / 48,600
APH1442H41E*	3.6	---	---	---	--	--	---
HKP-05C*	21 / 25	25 / 25	---	---	52	60	4.75 / 16,200
HKR-08C*	32 / 36	35 / 40	---	---	64	70	7 / 23,800
HKP-10C*	43 / 49	45 / 50	---	---	77	80	9.5 / 32,400
HKP-15C*	43 / 49	45 / 50	21 / 25	25 / 25	102	110	14.25 / 48,600
HKP-20C	43 / 49	45 / 50	43 / 49	45 / 50	127	150	19.0 / 64,800
APH1448H41E*	3.6	---	---	---	--	--	---
HKP-05C*	21 / 25	25 / 25	---	---	56	70	4.75 / 16,200
HKR-08C*	32 / 36	35 / 40	---	---	68	80	7 / 23,800
HKP-10C*	43 / 49	45 / 50	---	---	81	90	9.5 / 32,400
HKP-15C*	43 / 49	45 / 50	21 / 25	25 / 25	106	110	14.25 / 48,600
HKP-20C	43 / 49	45 / 50	43 / 49	45 / 50	131	150	19.0 / 64,800
APH1460H41F*	7.5	---	---	---	--	--	---
HKP-05C*	21 / 25	25 / 25	---	---	65	80	4.75 / 16,200
HKR-08C*	32 / 36	35 / 40	---	---	76	90	7 / 23,800
HKP-10C*	43 / 49	45 / 50	---	---	89	100	9.5 / 32,400
HKP-15C*	43 / 49	45 / 50	21 / 25	25 / 25	114	125	14.25 / 48,600
HKP-20C	43 / 49	45 / 50	43 / 49	45 / 50	139	150	19.0 / 64,800

[1] Minimum Circuit Ampacity @ 208 / 240 V

[2] Maximum Overcurrent Protection Device @ 208 / 240 V

* Revision level that may or may not be designated

C Circuit breaker option

Note: HKP-15C* and HKP-20C* replace HKR-15C and HKR-20C respectively to meet new UL1995 requirements.

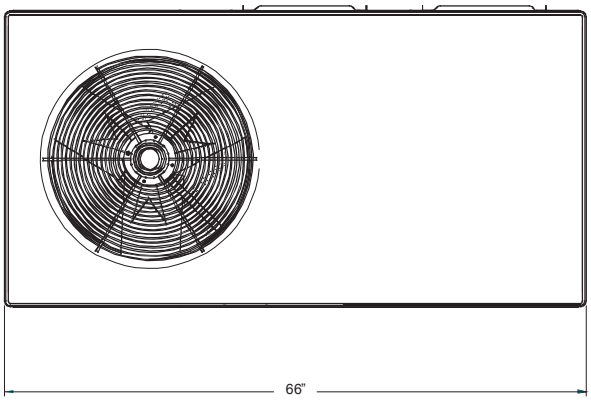

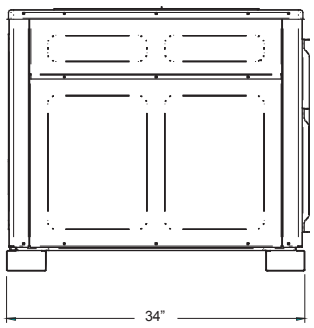

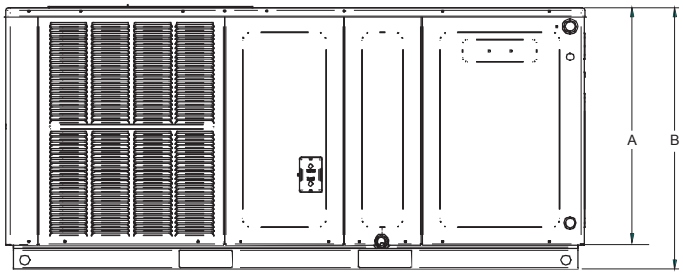

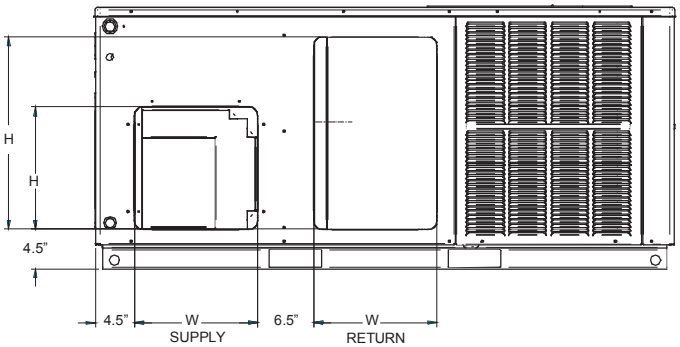

BACK VIEW
(DUCT OPENINGS)

MINIMAL CLEARANCES

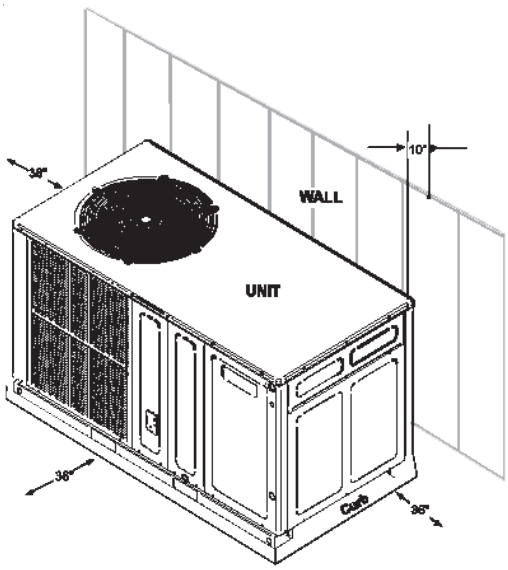

MODEL	UNIT DIMENSIONS				CHASSIS SIZE
			HEIGHT		
	W	D	A	B	
APH1424H41**	66	34	27½	30	Small
APH1430H41**	66	34	27½	30	Small
APH1436H41**	66	34	32½	35	Medium
APH1442H41**	66	34	32½	35	Medium
APH1448H41**	66	34	32½	35	Medium
APH1460H41**	66	34	36	38½	Large

MODEL	DUCT OPENINGS			
	SUPPLY		RETURN	
	W	H	W	H
APH1424H41**	14	14	14	22
APH1430H41**	14	14	14	22
APH1436H41**	14	14	14	24
APH1442H41**	14	14	14	24
APH1448H41**	14	14	14	24
APH1460H41**	14	14	14	24

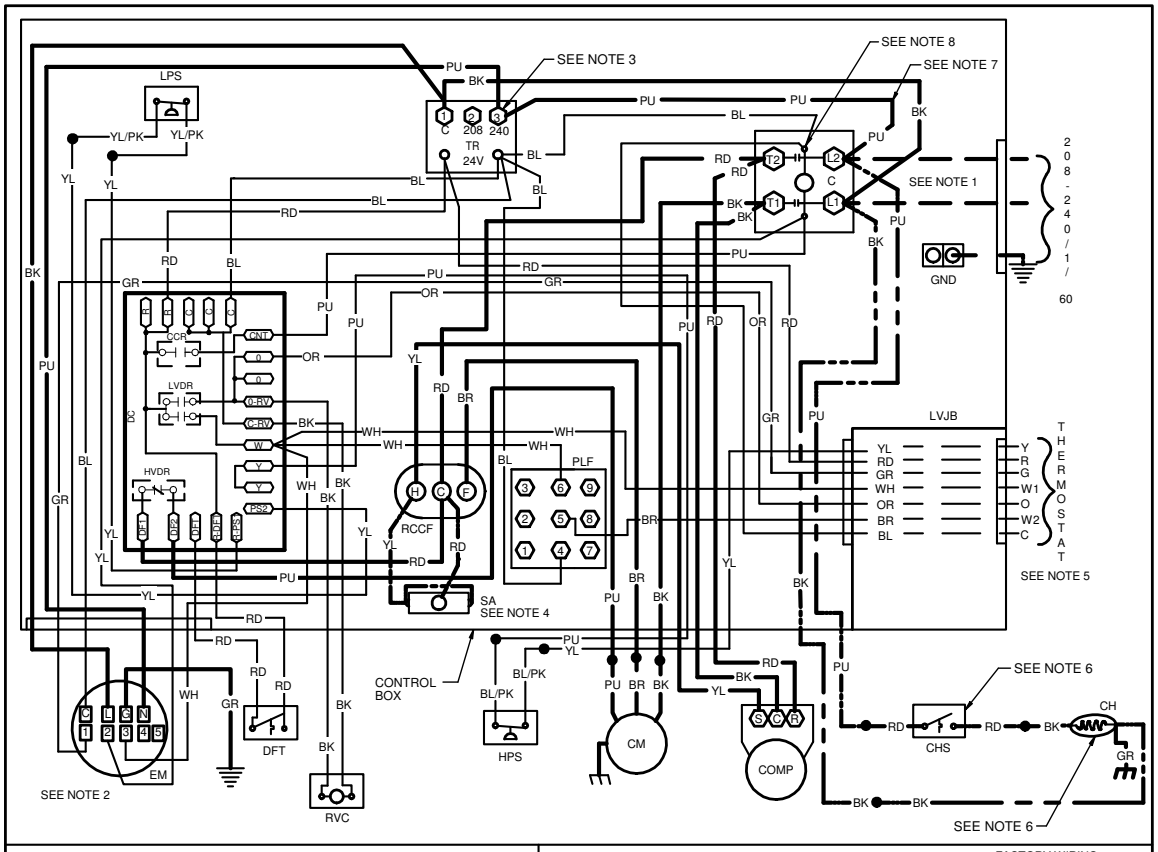

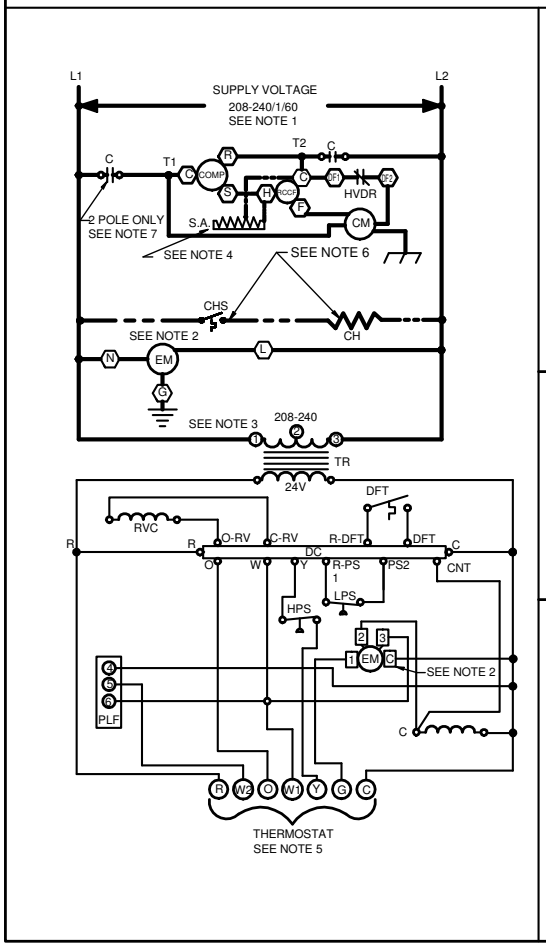

COMPONENT LEGEND

C	CONTACTOR
CCR	COMPRESSOR CONTACTOR RELAY
CH	CRACKCASE HEATER
CHS	CRACKCASE HEATER SWITCH
CM	CONDENSER MOTOR
COMP	COMPRESSOR
DC	DEFROST CONTROL
DFT	DEFROST THERMOSTAT
EM	EVAPORATOR MOTOR
GND	EQUIPMENT GROUND
HVDR	HIGH VOLTAGE DEFROST RELAY
LPS	LOW PRESSURE SWITCH
LVDR	LOW VOLTAGE DEFROST RELAY
LVJB	LOW VOLTAGE JUNCTION BOX
PLF	FEMALE PLUG / CONNECTOR
RVC	REVERSING VALVE COIL
RCCF	RUN CAPACITOR FOR COMPRESSOR AND FAN
SA	START ASSIST
TR	TRANSFORMER
HPS	HIGH PRESSURE SWITCH

FACTORY WIRING
- LINE VOLTAGE
- LOW VOLTAGE
- OPTIONAL HIGH VOLTAGE

FIELD WIRING
- HIGH VOLTAGE
- LOW VOLTAGE

WIRE CODE

BK	BLACK
BL	BLUE
BR	BROWN
GR	GREEN
OR	ORANGE
PU	PURPLE
RD	RED
WH	WHITE
YL	YELLOW

JUNCTION
TERMINAL
INTERNAL TO INTEGRATED CONTROL
PLUG CONNECTION
IGNITER
SWITCH (PRESS.)
OVERCURRENT PROT. DEVICE
EQUIPMENT GROUND
FIELD GROUND
FIELD SPLICE
SWITCH (TEMP)

NOTES:

1. REPLACEMENT WIRE MUST BE SAME SIZE AND TYPE INSULATION AS ORIGINAL (AT LEAST 105°C) USE COPPER CONDUCTOR ONLY.
2. TO CHANGE EVAPORATOR MOTOR SPEED MOVE WHITE AND YELLOW LEADS FROM EM"2" AND "3" TO "4" AND "5". IF BOTH LEADS ARE ENERGIZED, THE HIGHER SPEED SETTING IS USED.
3 FOR 208 VOLT TRANSFORMER OPERATION MOVE PURPLE WIRES FROM TERMINAL 3 TO TERMINAL 2 ON TRANSFORMER.
4. START ASSIST FACTORY EQUIPPED WHEN REQUIRED
5. USE COPPER CONDUCTORS ONLY USE N.E.C. CLASS 2 WIRE
6. CRANKCASE HEATER AND CRANKCASE HEATER SWITCH FACTORY EQUIPPED WHEN REQUIRED.
7. DOUBLE POLE CONTACTOR SHOWN. SINGLE POLE CONTACTOR COULD BE FACTORY EQUIPPED AS AN ALTERNATE CONFIGURATION.
8. COMMON SIDE OF CONTACTOR CAN NOT BE GROUNDED OR CONNECTED TO ANY OTHER COMMON (24V).

SEE UNIT RATING PLATE FOR TYPE AND SIZE OF OVER CURRENT PROTECTION

0140G01640-E

High Voltage: Disconnect all power before servicing or installing this unit. Multiple power sources may be present. Failure to do so may cause property damage, personal injury, or death.

WARNING

Wiring is subject to change. Always refer to the wiring diagram or the unit for the most up-to-date wiring.

ACCESSORY DESCRIPTION	ITEM NUMBER	
	SMALL CHASSIS	MEDIUM/LARGE CHASSIS
Downflow Economizer (use w/PCCP roof curb)	DDNECNJPCHHA	DDNECNJPCHHA
Downflow Plenum Kit (use w/PCCP roof curb)	PCP101-103	PCP101-103
Downflow Plenum Kit (R-8) (use w/PCCP roof curb)	PCP101-103 R8	PCP101-103 R8
Elbow Flashing w/R-8 Liner	PCEF101-103	PCEF101-103
Economizer Wiring Harness	0259G00215	0259G00215
External Horizontal Filter Rack	DPHFRA	DPHFRA
Horizontal Economizer	DHZECNJPGCHM	DHZECNJPGCHM
Inline Fuse Kit	INFKPKG01	INFKPKG01
Isolation Relay Kit (req'd with Economizer)	IRKT-01	IRKT-01
Manual Damper	PCMD101-103	PCMD101-103
Manual Damper- Horizontal	GPHMD101-103	GPHMD101-103
Motorized Damper	PCMDM101-103	PCMDM101-103
Outdoor Thermostat & Emergency Heat Relay Kit	OT/EHR18-60	OT/EHR18-60
Outdoor Thermostat Kit w/ Lockout Stat	OT18-60A	OT18-60A
Roof Curb	PCCP101-103	PCCP101-103
Square to Round Downflow (use w/PCCP roof curb)	SQRPC101	SQRPC102-103
Square to Round Horizontal	SQRPCH101	SQRPCH102-103

Single-Point Kit Accessory Kits

Select the single-point kit accessory based on the unit model.

Model	Single-Point Kit
APH1424H41**	SPK-30
APH1430H41**	SPK-35
APH1436H41**	SPK-40
APH1442H41**	SPK-45
APH1448H41**	SPK-50
APH1460H41**	SPK-60

Amana® is a trademark of Maytag Corporation or its related companies and used under license to Goodman Company, L.P. All rights reserved. Our continuing commitment to quality products may mean a change in specifications without notice. ©2020 Goodman Company, L.P. • Houston, Texas • Printed in the USA.