Heating & Air Conditioning
Amana®
AMERICA'S BRAND FOR COMFORT™

APCH3

PACKAGED AIR CONDITIONER
13.4 SEER2
2 TO 5 TONS

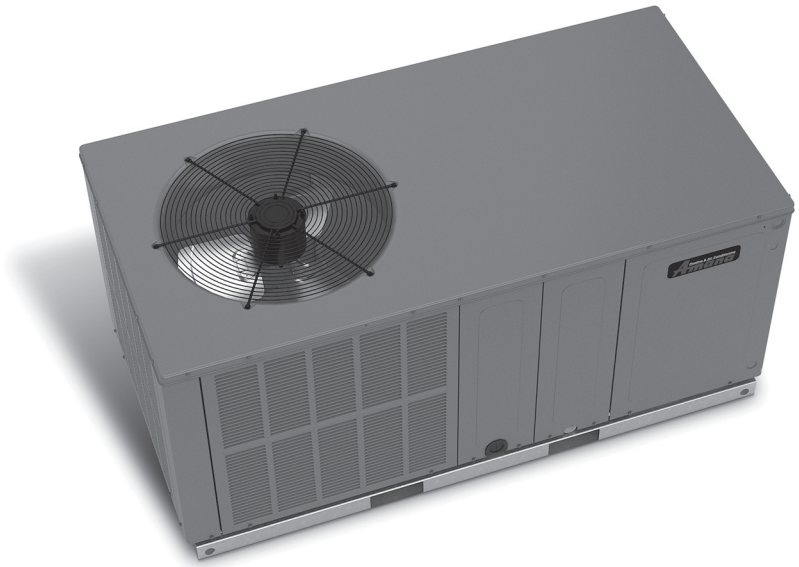

R32

Contents

Nomenclature 2
Product Specifications..... 3
Expanded Cooling Data..... 4
Airflow Data 18
Heater Kit Specifications 19
Dimensions..... 20
Wiring Diagram 21
Accessories..... 23

ALL ALUMINUM COIL

Standard Features

- Energy-efficient scroll compressor
- Multi-speed ECM indoor blower motor
- Quiet horizontal discharge
- All-Aluminum evaporator coil
- Copper tube / aluminum fin condenser coil
- Compressor sound blanket
- Totally enclosed, permanently lubricated condenser fan motor
- Fully charged system
- Electric heat kit available as a field-installed option
- AHRI Certified; UL listed

Cabinet Features

- Heavy-gauge galvanized-steel cabinet with attractive Architectural Gray powder-paint finish
- Aluminum foil-facing internal insulation reinforced with fiberglass scrim
- Meets cabinet air leakage requirements when tested in accordance with ASHRAE standard 193
- Fully insulated blower compartment with convenient access panels
- Louvered condenser coil protection
- One footprint for all tonnages
- When properly anchored, meets the 2023 Florida Building Code unit integrity requirements for hurricane-type winds (Anchor bracket kits available.)

10 YEAR PARTS LIMITED WARRANTY*

c UL us LISTED

AHRI CERTIFIED®

COMPANY WITH QUALITY SYSTEM CERTIFIED BY DNV GL = ISO 9001 =

COMPANY WITH ENVIRONMENTAL SYSTEM CERTIFIED BY DNV GL = ISO 14001 =

* Complete warranty available from your local dealer or at www.amana-hac.com. To receive the 10-Year Parts Limited Warranty, online registration must be completed within 60 days of installation. Online registration is not required in California, Florida, or Québec. The duration of warranty coverages in Texas and Florida differs in some cases. Other limitations and exclusions apply, refer to complete warranty details for full list of limitations and exclusions.

Amana® is a registered trademark of Maytag Corporation or its related companies and is used under license. All rights reserved.

A	P	C	H	3	24	3	1	A	A
1	2	3	4	5	6,7	8	9	10	11

Brand
A Amana Brand

Product Category
P Packaged Unit

Unit Type
C Air Conditioner
H Heat Pump

Airflow
M Multi-Position
H Horizontal

Efficiency
3 13.4 SEER2
5 15.2 SEER2

Nominal Capacity

24	2 Tons	42	3½ Tons
30	2½ tons	48	4 Tons
36	3 Tons	60	5 Tons

Refrigerant
3 R-32

Electrical
1 208/230 V, 1 Phase, 60 Hz

Major Revision
A

Minor Revision
A

MODELS	APCH 32431	APCH 33031	APCH 33631	APCH 34231	APCH 34831	APCH 36031
Cooling Capacity						
Total BTU/h	22,800	27,000	36,000	39,000	45,000	56,000
Sensible BTU/h	18,700	20,200	27,700	30,800	34,600	40,800
SEER2	13.4	13.4	13.4	13.4	13.4	13.4
EER2	10.6	10.6	10.6	10.6	10.6	10.6
Evaporator Fan / Coil						
Type	ECM	ECM	ECM	ECM	ECM	ECM
Wheel (D x W)	10 x 8	10 x 8	10 x 8	10 x 8	10 x 8	11 x 8
Indoor Nominal CFM	850	900	1125	1300	1450	1650
No. of Speeds	5	5	5	5	5	5
Indoor Blower FLA	3.8	3.8	5.4	5.4	5.4	5.4
Horsepower	1/2	1/2	3/4	3/4	3/4	3/4
Face Area (ft2)	5.26	5.26	6.23	6.23	6.23	7.01
Rows Deep / Fins per Inch	3/14	3/14	4/14	4/14	4/14	4/14
Metering Device Type	Piston	Piston	Piston	Piston	Piston	Piston
Drain Size (NPT)	¾"	¾"	¾"	¾"	¾"	¾"
Refrigerant Charge (oz.)	38	36	64	61	65	78
Condenser Fan / Coil						
Outdoor Fan FLA	0.95	0.95	1.4	1.4	1.4	1.4
Horsepower	1/6	1/6	1/4	1/4	1/4	1/4
Blade Diameter	22	22	22	22	22	22
Face Area (ft2)	13.37	13.37	17.02	17.02	17.02	18.85
Rows Deep / Fins per Inch	1/24	1/24	1/24	1/24	2/16	2/20
Metering Device Type	Piston	Piston	Piston	Piston	Piston	Piston
Compressor						
Type	Scroll	Scroll	Scroll	Scroll	Scroll	Scroll
Stage	Single	Single	Single	Single	Single	Two
RLA	10.2	12.8	14.4	14.4	19.4	27.1
LRA	59.3	76.0	112	112	128	178
Electrical Data						
Phase	1	1	1	1	1	1
Voltage (Frequency 60 Hz)	208-230	208-230	208-230	208-230	208-230	208-230
Min. Circuit Ampacity	17.6	20.8	24.8	24.8	31.0	40.6
Max. Overcurrent Protection	25	30	35	35	50	60
Decibels	74	74	76	76	76	78
Operating/Shipping Weights (lbs)	320 / 330	320 / 330	380 / 390	380 / 390	380 / 390	400 / 410

NOTES:

Always check the S&R plate for electrical data on the unit being installed.

Wire size should be determined in accordance with National Electrical Codes. Extensive wire runs will require larger wire sizes.

Must use time-delay fuses or HACR-type circuit breakers of the same size as noted.

			Outdoor Ambient Temperature																							
			65				75				85				95				105				115			
			Entering Indoor Wet Bulb Temperature																							
IDB	Airflow		59	63	67	71	59	63	67	71	59	63	67	71	59	63	67	71	59	63	67	71	59	63	67	71
600	MBh	23.1	23.4	24.1	-	22.9	23.2	23.9	-	22.3	22.6	23.3	-	21.2	21.6	22.3	-	20.0	20.3	21.0	-	18.8	19.1	19.8	-	-
		S/T	0.62	0.54	0.39	-	0.63	0.54	0.40	-	0.65	0.57	0.42	-	1.00	0.59	0.44	-	1.00	0.62	0.47	-	1.00	0.67	0.52	-
		ΔT	18.77	17.08	13.92	-	18.72	17.03	13.87	-	18.96	17.27	14.11	-	18.70	17.01	13.86	-	18.48	16.79	13.63	-	19.53	17.84	14.69	-
		kW	1.51	1.51	1.50	-	1.70	1.70	1.70	-	1.92	1.92	1.92	-	2.16	2.16	2.15	-	2.42	2.42	2.42	-	2.73	2.73	2.73	-
		Amps	5.79	5.78	5.77	-	6.64	6.63	6.62	-	7.59	7.58	7.56	-	8.61	8.61	8.59	-	9.76	9.75	9.74	-	11.10	11.10	11.08	-
		Hi PR	257	258	260	-	298	299	301	-	340	341	343	-	386	387	389	-	436	437	439	-	489	490	492	-
		Lo PR	125	126	130	-	132	134	137	-	139	141	144	-	145	146	150	-	150	152	155	-	157	159	162	-
	800	MBh	23.5	23.8	24.5	-	23.3	23.6	24.3	-	22.7	23.0	23.7	-	21.6	22.0	22.7	-	20.4	20.7	21.4	-	19.2	19.5	20.2	-
		S/T	0.72	0.64	0.49	-	0.73	0.64	0.50	-	0.75	0.67	0.53	-	1.00	0.69	0.55	-	1.00	0.72	0.57	-	1.00	0.77	0.63	-
		ΔT	17.26	15.57	12.41	-	17.21	15.52	12.36	-	17.45	15.76	12.60	-	17.19	15.50	12.35	-	16.97	15.28	12.12	-	18.02	16.33	13.18	-
		kW	1.52	1.52	1.52	-	1.72	1.72	1.71	-	1.94	1.94	1.93	-	2.17	2.17	2.17	-	2.44	2.44	2.43	-	2.75	2.75	2.74	-
		Amps	5.85	5.85	5.83	-	6.70	6.70	6.68	-	7.65	7.64	7.63	-	8.68	8.67	8.66	-	9.82	9.82	9.80	-	11.17	11.16	11.15	-
		Hi PR	260	261	263	-	301	302	304	-	344	345	346	-	389	391	392	-	439	440	442	-	492	493	495	-
		Lo PR	127	129	132	-	135	137	140	-	142	143	146	-	147	149	152	-	153	154	158	-	160	161	165	-
	1000	MBh	24.0	24.4	25.1	-	23.8	24.2	24.9	-	23.2	23.6	24.2	-	22.2	22.5	23.2	-	20.9	21.2	21.9	-	19.7	20.1	20.8	-
		S/T	0.76	0.68	0.54	-	0.77	0.69	0.54	-	1.00	0.72	0.57	-	1.00	0.74	0.59	-	1.00	0.76	0.61	-	1.00	1.00	0.67	-
		ΔT	16.07	14.38	11.23	-	16.03	14.34	11.18	-	16.26	14.57	11.42	-	16.01	14.32	11.16	-	15.78	14.09	10.94	-	16.84	15.15	12.00	-
		kW	1.54	1.53	1.53	-	1.73	1.73	1.73	-	1.95	1.95	1.94	-	2.19	2.18	2.18	-	2.45	2.45	2.44	-	2.76	2.76	2.75	-
		Amps	5.90	5.90	5.88	-	6.75	6.75	6.73	-	7.70	7.69	7.68	-	8.73	8.72	8.71	-	9.87	9.87	9.85	-	11.22	11.21	11.20	-
		Hi PR	263	264	266	-	304	305	307	-	347	348	349	-	392	394	395	-	442	443	445	-	495	496	498	-
		Lo PR	130	132	135	-	138	140	143	-	145	146	149	-	150	152	155	-	156	157	161	-	163	164	168	-

600	MBh	23.1	23.4	24.1	25.2	22.9	23.2	23.9	25.0	22.3	22.6	23.3	24.4	21.2	21.6	22.3	23.3	20.0	20.3	21.0	22.0	18.8	19.1	19.8	20.9	21.5
		S/T	0.76	0.68	0.53	0.4	0.77	0.68	0.54	0.4	1.00	0.71	0.56	0.4	1.00	0.73	0.58	0.4	1.00	0.75	0.61	0.5	1.00	1.00	0.66	0.5
		ΔT	22.48	20.79	17.64	14.4	22.44	20.75	17.59	14.3	22.67	20.98	17.83	14.6	22.42	20.73	17.57	14.3	22.19	20.50	17.35	14.1	23.25	21.56	18.41	15.1
		kW	1.51	1.51	1.50	1.5	1.70	1.70	1.70	1.7	1.92	1.92	1.92	1.9	2.16	2.16	2.15	2.2	2.42	2.42	2.42	2.4	2.73	2.73	2.73	2.7
		Amps	5.78	5.78	5.76	5.8	6.63	6.63	6.61	6.7	7.58	7.57	7.56	7.6	8.61	8.60	8.58	8.6	9.75	9.75	9.73	9.8	11.10	11.09	11.08	11.1
		Hi PR	257	258	260	264.7	298	299	301	305.4	341	342	344	348.0	386	388	389	393.9	436	437	439	443.4	489	490	492	496.3
		Lo PR	125	126	130	134.9	132	134	137	142.5	139	141	144	149.2	145	146	150	154.9	150	152	155	160.4	157	159	162	167.4
	800	MBh	23.5	23.8	24.5	25.6	23.3	23.6	24.3	25.4	22.7	23.0	23.7	24.8	21.7	**22.0**	22.7	23.7	20.4	20.7	21.4	22.5	19.2	19.6	20.2	21.3
		S/T	0.86	0.78	0.63	0.5	1.00	0.78	0.64	0.5	1.00	0.81	0.66	0.5	1.00	**0.83**	0.69	0.5	1.00	0.86	0.71	0.6	1.00	1.00	0.77	0.6
		ΔT	20.97	19.28	16.13	12.9	20.93	19.24	16.08	12.8	21.16	19.47	16.32	13.0	20.91	**19.22**	16.06	12.8	20.68	18.99	15.84	12.6	21.74	20.05	16.89	13.6
		kW	1.52	1.52	1.52	1.5	1.72	1.72	1.71	1.7	1.94	1.93	1.93	1.9	2.17	**2.17**	2.17	2.2	2.44	2.43	2.43	2.4	2.75	2.74	2.74	2.8
		Amps	5.85	5.84	5.83	5.9	6.70	6.69	6.68	6.7	7.65	7.64	7.62	7.7	8.67	**8.66**	8.65	8.7	9.82	9.81	9.80	9.9	11.16	11.16	11.14	11.2
		Hi PR	260	261	263	267.8	301	302	304	308.5	344	345	347	351.2	390	**391**	393	397.1	439	440	442	446.6	492	493	495	499.4
		Lo PR	127	129	132	137.5	135	137	140	145.1	142	143	146	151.8	147	**149**	152	157.5	153	154	158	163.0	160	161	165	170.0
	1000	MBh	24.1	24.4	25.1	26.1	23.8	24.2	24.9	25.9	23.2	23.6	24.3	25.3	22.2	22.5	23.2	24.3	20.9	21.3	21.9	23.0	19.8	20.1	20.8	21.8
		S/T	0.90	0.82	0.68	0.5	1.00	0.83	0.68	0.5	1.00	0.86	0.71	0.6	1.00	0.88	0.73	0.6	1.00	1.00	0.75	0.6	1.00	1.00	0.81	0.7
		ΔT	19.79	18.10	14.94	11.7	19.74	18.05	14.90	11.6	19.98	18.29	15.13	11.9	19.73	18.04	14.88	11.6	19.50	17.81	14.65	11.4	20.56	18.87	15.71	12.4
		kW	1.53	1.53	1.53	1.5	1.73	1.73	1.73	1.7	1.95	1.95	1.94	2.0	2.18	2.18	2.18	2.2	2.45	2.45	2.44	2.5	2.76	2.76	2.75	2.8
		Amps	5.90	5.89	5.88	5.9	6.75	6.74	6.73	6.8	7.70	7.69	7.67	7.7	8.72	8.72	8.70	8.8	9.87	9.86	9.85	9.9	11.21	11.21	11.19	11.3
		Hi PR	263	265	266	270.8	304	305	307	311.5	347	348	350	354.2	393	394	396	400.1	442	443	445	449.6	495	496	498	502.4
		Lo PR	130	132	135	140.4	138	140	143	148.1	145	146	149	154.8	150	152	155	160.4	156	157	161	166.0	163	164	168	172.9

IDB = Entering Indoor Dry Bulb Temperature

High and low pressures are measured at the liquid and suction access fittings.

Shaded area reflects ACCA (TVA) conditions.

kW = total system power

Amps: Unit amps (comp.+ evaporator + condenser fan motors)

Expanded Cooling Data — APCH32431 (cont.)

			Outdoor Ambient Temperature																							
			65				75				85				95				105				115			
			Entering Indoor Wet Bulb Temperature																							
IDB	Airflow		59	63	67	71	59	63	67	71	59	63	67	71	59	63	67	71	59	63	67	71	59	63	67	71
80	600	MBh	23.2	23.5	24.2	25.3	23.0	23.3	24.0	25.1	22.4	22.7	23.4	24.5	21.4	21.7	22.4	23.4	20.1	20.4	21.1	22.2	18.9	19.3	19.9	21.0
		S/T	1.00	0.81	0.67	0.5	1.00	0.82	0.67	0.5	1.00	0.85	0.70	0.5	1.00	1.00	0.72	0.6	1.00	1.00	0.74	0.6	1.00	1.00	0.80	0.6
		ΔT	26.22	24.53	21.38	18.1	26.18	24.49	21.33	18.1	26.42	24.72	21.57	18.3	26.16	24.47	21.31	18.0	25.93	24.24	21.09	17.8	26.99	25.30	22.15	18.9
		kW	1.51	1.51	1.50	1.5	1.70	1.70	1.70	1.7	1.92	1.92	1.92	1.9	2.16	2.16	2.15	2.2	2.42	2.42	2.42	2.4	2.73	2.73	2.73	2.7
		Amps	5.79	5.78	5.77	5.8	6.64	6.63	6.62	6.7	7.58	7.58	7.56	7.6	8.61	8.60	8.59	8.7	9.76	9.75	9.74	9.8	11.10	11.10	11.08	11.1
		Hi PR	258	259	261	265.1	298	300	301	305.8	341	342	344	348.5	387	388	390	394.4	436	438	439	443.9	489	490	492	496.7
		Lo PR	125	127	130	135.5	133	135	138	143.1	140	141	144	149.8	145	147	150	155.4	151	152	156	161.0	158	159	163	167.9
	800	MBh	23.6	24.0	24.7	25.7	23.4	23.8	24.4	25.5	22.8	23.1	23.8	24.9	21.8	22.1	**22.8**	23.9	20.5	20.8	21.5	22.6	19.3	19.7	20.4	21.4
		S/T	1.00	0.91	0.77	0.6	1.00	0.92	0.77	0.6	1.00	0.95	0.80	0.6	1.00	1.00	**0.82**	0.7	1.00	1.00	0.85	0.7	1.00	1.00	0.90	0.7
		ΔT	24.71	23.02	19.87	16.6	24.67	22.98	19.82	16.6	24.90	23.21	20.06	16.8	24.65	22.96	**19.80**	16.5	24.42	22.73	19.58	16.3	25.48	23.79	20.64	17.4
		kW	1.52	1.52	1.52	1.5	1.72	1.72	1.71	1.7	1.94	1.94	1.93	1.9	2.17	2.17	**2.17**	2.2	2.44	2.44	2.43	2.4	2.75	2.74	2.74	2.8
		Amps	5.85	5.85	5.83	5.9	6.70	6.69	6.68	6.7	7.65	7.64	7.63	7.7	8.68	8.67	**8.65**	8.7	9.82	9.82	9.80	9.9	11.17	11.16	11.15	11.2
		Hi PR	261	262	264	268.3	302	303	304	309.0	344	345	347	351.6	390	391	**393**	397.6	440	441	443	447.1	492	494	495	499.9
		Lo PR	128	129	133	138.0	136	137	140	145.7	142	144	147	152.4	148	149	**153**	158.0	153	155	158	163.6	160	162	165	170.5
	1000	MBh	24.2	24.5	25.2	26.3	24.0	24.3	25.0	26.0	23.4	23.7	24.4	25.4	22.3	22.6	23.3	24.4	21.0	21.4	22.1	23.1	19.9	20.2	20.9	22.0
		S/T	1.00	0.96	0.81	0.7	1.00	0.96	0.82	0.7	1.00	1.00	0.84	0.7	1.00	1.00	0.87	0.7	1.00	1.00	0.89	0.7	1.00	1.00	1.00	0.8
		ΔT	23.53	21.84	18.68	15.4	23.48	21.79	18.64	15.4	23.72	22.03	18.88	15.6	23.47	21.78	18.62	15.4	23.24	21.55	18.40	15.1	24.30	22.61	19.45	16.2
		kW	1.54	1.53	1.53	1.5	1.73	1.73	1.73	1.7	1.95	1.95	1.94	2.0	2.19	2.18	2.18	2.2	2.45	2.45	2.44	2.5	2.76	2.76	2.75	2.8
		Amps	5.90	5.90	5.88	5.9	6.75	6.75	6.73	6.8	7.70	7.69	7.68	7.7	8.73	8.72	8.71	8.8	9.87	9.87	9.85	9.9	11.22	11.21	11.20	11.3
		Hi PR	264	265	267	271.3	305	306	308	312.0	347	348	350	354.6	393	394	396	400.6	443	444	446	450.1	495	497	498	502.9
		Lo PR	131	132	136	141.0	139	140	143	148.6	145	147	150	155.3	151	152	156	161.0	156	158	161	166.5	163	165	168	173.5
85	600	MBh	23.6	23.9	24.6	25.7	23.4	23.7	24.4	25.5	22.8	23.1	23.8	24.9	21.8	22.1	22.8	23.8	20.5	20.8	21.5	22.6	19.3	19.6	20.3	21.4
		S/T	1.00	0.92	0.77	0.6	1.00	1.00	0.78	0.6	1.00	1.00	0.81	0.7	1.00	1.00	0.83	0.7	1.00	1.00	0.85	0.7	1.00	1.00	1.00	0.8
		ΔT	29.54	27.85	24.70	21.4	29.50	27.81	24.65	21.4	29.73	28.04	24.89	21.6	29.48	27.79	24.63	21.4	29.25	27.56	24.41	21.1	30.31	28.62	25.47	22.2
		kW	1.51	1.51	1.51	1.5	1.71	1.71	1.70	1.7	1.93	1.92	1.92	1.9	2.16	2.16	2.16	2.2	2.43	2.42	2.42	2.4	2.74	2.73	2.73	2.7
		Amps	5.80	5.80	5.78	5.8	6.65	6.65	6.63	6.7	7.60	7.59	7.58	7.6	8.63	8.62	8.61	8.7	9.77	9.77	9.75	9.8	11.12	11.11	11.10	11.2
		Hi PR	259	260	262	266.3	300	301	303	307.1	342	343	345	349.7	388	389	391	395.6	438	439	441	445.1	491	492	493	498.0
		Lo PR	127	129	132	137.3	135	136	140	145.0	142	143	146	151.7	147	149	152	157.3	153	154	158	162.9	160	161	164	169.8
	800	MBh	24.0	24.4	25.0	26.1	23.8	24.1	24.8	25.9	23.2	23.5	24.2	25.3	22.2	22.5	23.2	24.2	20.9	21.2	21.9	23.0	19.7	20.1	20.8	21.8
		S/T	1.00	1.00	0.88	0.7	1.00	1.00	0.88	0.7	1.00	1.00	0.91	0.8	1.00	1.00	0.93	0.8	1.00	1.00	1.00	0.8	1.00	1.00	1.00	0.9
		ΔT	28.03	26.34	23.19	19.9	27.99	26.30	23.14	19.9	28.22	26.53	23.38	20.1	27.97	26.28	23.12	19.9	27.74	26.05	22.90	19.6	28.80	27.11	23.95	20.7
		kW	1.53	1.53	1.52	1.5	1.72	1.72	1.72	1.7	1.94	1.94	1.94	2.0	2.18	2.18	2.17	2.2	2.44	2.44	2.44	2.5	2.75	2.75	2.75	2.8
		Amps	5.87	5.86	5.85	5.9	6.72	6.71	6.70	6.8	7.67	7.66	7.64	7.7	8.69	8.69	8.67	8.7	9.84	9.83	9.82	9.9	11.18	11.18	11.16	11.2
		Hi PR	262	263	265	269.5	303	304	306	310.2	345	347	348	352.8	391	392	394	398.8	441	442	444	448.3	494	495	497	501.1
		Lo PR	130	131	135	139.9	137	139	142	147.6	144	146	149	154.2	150	151	155	159.9	155	157	160	165.4	162	164	167	172.4
	1000	MBh	24.6	24.9	25.6	26.6	24.4	24.7	25.4	26.4	23.7	24.1	24.8	25.8	22.7	23.0	23.7	24.8	21.4	21.8	22.5	23.5	20.3	20.6	21.3	22.4
		S/T	1.00	1.00	0.92	0.8	1.00	1.00	0.93	0.8	1.00	1.00	0.95	0.8	1.00	1.00	0.98	0.8	1.00	1.00	1.00	0.8	1.00	1.00	1.00	0.9
		ΔT	26.85	25.16	22.00	18.7	26.80	25.11	21.96	18.7	27.04	25.35	22.19	18.9	26.79	25.10	21.94	18.7	26.56	24.87	21.71	18.4	27.62	25.93	22.77	19.5
		kW	1.54	1.54	1.53	1.5	1.73	1.73	1.73	1.7	1.95	1.95	1.95	2.0	2.19	2.19	2.18	2.2	2.45	2.45	2.45	2.5	2.76	2.76	2.76	2.8
		Amps	5.92	5.91	5.90	6.0	6.77	6.76	6.75	6.8	7.72	7.71	7.70	7.8	8.74	8.74	8.72	8.8	9.89	9.88	9.87	9.9	11.23	11.23	11.21	11.3
		Hi PR	265	266	268	272.5	306	307	309	313.2	348	350	351	355.9	394	395	397	401.8	444	445	447	451.3	497	498	500	504.1
		Lo PR	133	134	138	142.9	140	142	145	150.5	147	149	152	157.2	153	154	158	162.9	158	160	163	168.4	165	167	170	175.4

IDB = Entering Indoor Dry Bulb Temperature

High and low pressures are measured at the liquid and suction access fittings.

Shaded area reflects AHRI (TVA) conditions.

kW = total system power

Amps: Unit amps (comp.+ evaporator + condenser fan motors)

			Outdoor Ambient Temperature																							
			65				75				85				95				105				115			
			Entering Indoor Wet Bulb Temperature																							
IDB	Airflow		59	63	67	71	59	63	67	71	59	63	67	71	59	63	67	71	59	63	67	71	59	63	67	71
70	800	MBh	27.2	27.6	28.4	-	27.0	27.4	28.2	-	26.3	26.7	27.5	-	25.0	25.4	26.2	-	23.5	23.9	24.7	-	22.1	22.5	23.4	-
		S/T	0.53	0.46	0.32	-	0.54	0.46	0.33	-	0.56	0.49	0.35	-	0.58	0.51	0.37	-	1.00	0.53	0.39	-	1.00	0.58	0.44	-
		ΔT	20.63	18.82	15.43	-	20.58	18.77	15.38	-	20.83	19.02	15.64	-	20.56	18.75	15.37	-	20.32	18.51	15.12	-	21.45	19.64	16.26	-
		kW	1.77	1.77	1.76	-	2.00	2.00	2.00	-	2.27	2.26	2.26	-	2.55	2.55	2.54	-	2.87	2.87	2.86	-	3.24	3.24	3.23	-
		Amps	6.83	6.82	6.80	-	7.85	7.84	7.83	-	8.99	8.99	8.97	-	10.23	10.22	10.20	-	11.61	11.60	11.58	-	13.23	13.22	13.20	-
		Hi PR	271	273	274	-	315	316	318	-	360	361	363	-	408	410	411	-	461	462	464	-	517	518	520	-
		Lo PR	119	120	123	-	126	128	131	-	132	134	137	-	138	139	142	-	143	145	148	-	150	151	154	-
	1050	MBh	27.8	28.2	29.0	-	27.6	28.0	28.8	-	26.9	27.3	28.1	-	25.6	26.0	26.8	-	24.1	24.5	25.3	-	22.7	23.1	24.0	-
		S/T	0.66	0.58	0.45	-	0.66	0.59	0.45	-	0.69	0.61	0.48	-	0.71	0.63	0.50	-	1.00	0.65	0.52	-	1.00	0.71	0.57	-
		ΔT	18.49	16.68	13.30	-	18.44	16.63	13.25	-	18.70	16.89	13.50	-	18.43	16.61	13.23	-	18.18	16.37	12.99	-	19.32	17.51	14.12	-
		kW	1.79	1.79	1.79	-	2.03	2.03	2.02	-	2.29	2.29	2.28	-	2.57	2.57	2.57	-	2.89	2.89	2.89	-	3.26	3.26	3.26	-
		Amps	6.93	6.92	6.91	-	7.96	7.95	7.93	-	9.10	9.09	9.07	-	10.33	10.32	10.31	-	11.71	11.71	11.69	-	13.33	13.33	13.31	-
		Hi PR	276	277	279	-	319	320	322	-	364	365	367	-	413	414	416	-	465	466	468	-	521	522	524	-
		Lo PR	122	123	126	-	129	131	134	-	136	137	140	-	141	142	146	-	146	148	151	-	153	154	157	-
	1300	MBh	28.7	29.0	29.9	-	28.4	28.8	29.6	-	27.7	28.1	28.9	-	26.5	26.9	27.7	-	25.0	25.3	26.2	-	23.6	24.0	24.8	-
		S/T	0.70	0.63	0.49	-	0.71	0.63	0.50	-	0.73	0.66	0.52	-	1.00	0.68	0.54	-	1.00	0.70	0.56	-	1.00	0.75	0.62	-
		ΔT	16.93	15.12	11.74	-	16.88	15.07	11.69	-	17.14	15.32	11.94	-	16.86	15.05	11.67	-	16.62	14.81	11.43	-	17.75	15.94	12.56	-
		kW	1.81	1.81	1.80	-	2.05	2.04	2.04	-	2.31	2.31	2.30	-	2.59	2.59	2.59	-	2.91	2.91	2.90	-	3.28	3.28	3.28	-
		Amps	7.01	7.00	6.98	-	8.03	8.02	8.01	-	9.17	9.16	9.15	-	10.41	10.40	10.38	-	11.79	11.78	11.76	-	13.41	13.40	13.38	-
		Hi PR	280	281	283	-	323	324	326	-	368	369	371	-	417	418	420	-	469	470	472	-	525	526	528	-
		Lo PR	126	127	130	-	133	134	137	-	139	141	144	-	145	146	149	-	150	151	154	-	157	158	161	-
75	800	MBh	27.2	27.6	28.5	29.7	27.0	27.4	28.2	29.5	26.3	26.7	27.5	28.7	25.0	25.4	26.3	27.5	23.5	23.9	24.7	26.0	22.2	22.5	23.4	24.6
		S/T	0.66	0.58	0.45	0.3	0.66	0.59	0.46	0.3	0.69	0.61	0.48	0.3	1.00	0.63	0.50	0.4	1.00	0.65	0.52	0.4	1.00	0.71	0.57	0.4
		ΔT	24.61	22.80	19.42	15.9	24.56	22.75	19.37	15.9	24.82	23.00	19.62	16.1	24.54	22.73	19.35	15.8	24.30	22.49	19.11	15.6	25.43	23.62	20.24	16.7
		kW	1.77	1.77	1.76	1.8	2.00	2.00	2.00	2.0	2.27	2.26	2.26	2.3	2.55	2.55	2.54	2.6	2.87	2.86	2.86	2.9	3.24	3.24	3.23	3.3
		Amps	6.82	6.81	6.80	6.9	7.85	7.84	7.82	7.9	8.99	8.98	8.96	9.0	10.22	10.21	10.20	10.3	11.60	11.60	11.58	11.7	13.22	13.21	13.20	13.3
		Hi PR	272	273	275	279.5	315	316	318	322.6	360	361	363	367.8	409	410	412	416.5	461	462	464	468.9	517	518	520	524.9
		Lo PR	119	120	123	128.5	126	128	131	135.8	133	134	137	142.2	138	139	142	147.6	143	145	148	152.9	150	151	154	159.5
	1050	MBh	27.8	28.2	29.1	30.3	27.6	28.0	28.8	30.1	26.9	27.3	28.1	29.3	25.6	**26.0**	26.9	28.1	24.1	24.5	25.3	26.6	22.8	23.2	24.0	25.2
		S/T	0.79	0.71	0.58	0.4	0.79	0.72	0.58	0.4	1.00	0.74	0.61	0.5	1.00	**0.76**	0.63	0.5	1.00	0.78	0.65	0.5	1.00	0.83	0.70	0.6
		ΔT	22.48	20.67	17.28	13.8	22.43	20.62	17.23	13.7	22.68	20.87	17.49	14.0	22.41	**20.60**	17.21	13.7	22.17	20.36	16.97	13.5	23.30	21.49	18.11	14.6
		kW	1.79	1.79	1.79	1.8	2.03	2.02	2.02	2.0	2.29	2.29	2.28	2.3	2.57	**2.57**	2.57	2.6	2.89	2.89	2.88	2.9	3.26	3.26	3.26	3.3
		Amps	6.93	6.92	6.90	7.0	7.95	7.94	7.92	8.0	9.09	9.08	9.07	9.1	10.33	**10.32**	10.30	10.4	11.71	11.70	11.68	11.8	13.33	13.32	13.30	13.4
		Hi PR	276	277	279	283.8	319	320	322	326.9	364	365	367	372.1	413	**414**	416	420.8	465	467	468	473.2	521	523	524	529.2
		Lo PR	122	123	126	131.5	129	131	134	138.8	136	137	140	145.2	141	**142**	146	150.7	146	148	151	156.0	153	154	157	162.6
	1300	MBh	28.7	29.1	29.9	31.1	28.4	28.8	29.6	30.9	27.7	28.1	28.9	30.2	26.5	26.9	27.7	28.9	25.0	25.4	26.2	27.4	23.6	24.0	24.8	26.1
		S/T	0.83	0.75	0.62	0.5	0.84	0.76	0.63	0.5	1.00	0.79	0.65	0.5	1.00	0.80	0.67	0.5	1.00	0.83	0.69	0.6	1.00	1.00	0.74	0.6
		ΔT	20.91	19.10	15.72	12.2	20.86	19.05	15.67	12.2	21.12	19.31	15.92	12.4	20.85	19.03	15.65	12.1	20.60	18.79	15.41	11.9	21.74	19.93	16.54	13.0
		kW	1.81	1.81	1.80	1.8	2.04	2.04	2.04	2.1	2.31	2.30	2.30	2.3	2.59	2.59	2.58	2.6	2.91	2.91	2.90	2.9	3.28	3.28	3.27	3.3
		Amps	7.00	6.99	6.98	7.1	8.02	8.02	8.00	8.1	9.17	9.16	9.14	9.2	10.40	10.39	10.38	10.5	11.78	11.77	11.76	11.8	13.40	13.39	13.38	13.5
		Hi PR	280	281	283	287.8	323	324	326	331.0	368	369	371	376.2	417	418	420	424.8	469	471	473	477.3	525	527	529	533.3
		Lo PR	126	127	130	135.2	133	134	137	142.5	139	141	144	148.9	145	146	149	154.3	150	151	155	159.6	157	158	161	166.3

IDB = Entering Indoor Dry Bulb Temperature

High and low pressures are measured at the liquid and suction access fittings.

Shaded area reflects ACCA (TVA) conditions.

kW = total system power

Amps: Unit amps (comp.+ evaporator + condenser fan motors)

Expanded Cooling Data — APCH33031 (cont.)

			Outdoor Ambient Temperature																							
			65				75				85				95				105				115			
			Entering Indoor Wet Bulb Temperature																							
IDB	Airflow		59	63	67	71	59	63	67	71	59	63	67	71	59	63	67	71	59	63	67	71	59	63	67	71
80	800	MBh	27.4	27.8	28.6	29.8	27.1	27.5	28.3	29.6	26.4	26.8	27.6	28.9	25.2	25.6	26.4	27.7	23.7	24.1	24.9	26.1	22.3	22.7	23.5	24.8
		S/T	0.78	0.71	0.57	0.4	1.00	0.71	0.58	0.4	1.00	0.74	0.60	0.5	1.00	0.76	0.62	0.5	1.00	0.78	0.64	0.5	1.00	1.00	0.70	0.6
		ΔT	28.62	26.81	23.43	19.9	28.57	26.76	23.38	19.9	28.83	27.01	23.63	20.1	28.55	26.74	23.36	19.9	28.31	26.50	23.12	19.6	29.44	27.63	24.25	20.7
		kW	1.77	1.77	1.76	1.8	2.00	2.00	2.00	2.0	2.27	2.26	2.26	2.3	2.55	2.55	2.54	2.6	2.87	2.87	2.86	2.9	3.24	3.24	3.23	3.3
		Amps	6.83	6.82	6.80	6.9	7.85	7.84	7.83	7.9	8.99	8.98	8.97	9.0	10.23	10.22	10.20	10.3	11.61	11.60	11.58	11.7	13.23	13.22	13.20	13.3
		Hi PR	272	273	275	280.0	315	316	318	323.1	360	362	364	368.3	409	410	412	417.0	462	463	465	469.5	518	519	521	525.4
		Lo PR	119	121	124	129.0	127	128	131	136.3	133	135	138	142.7	138	140	143	148.1	144	145	148	153.4	150	152	155	160.1
	1050	MBh	28.0	28.4	29.2	30.5	27.7	28.1	29.0	30.2	27.0	27.4	28.2	29.5	25.8	26.2	**27.0**	28.3	24.3	24.7	25.5	26.7	22.9	23.3	24.1	25.4
		S/T	0.91	0.83	0.70	0.6	1.00	0.84	0.71	0.6	1.00	0.86	0.73	0.6	1.00	0.88	**0.75**	0.6	1.00	1.00	0.77	0.6	1.00	1.00	0.82	0.7
		ΔT	26.49	24.68	21.29	17.8	26.44	24.63	21.24	17.7	26.69	24.88	21.50	18.0	26.42	24.61	**21.22**	17.7	26.18	24.37	20.98	17.5	27.31	25.50	22.12	18.6
		kW	1.79	1.79	1.79	1.8	2.03	2.03	2.02	2.0	2.29	2.29	2.28	2.3	2.57	2.57	**2.57**	2.6	2.89	2.89	2.89	2.9	3.26	3.26	3.26	3.3
		Amps	6.93	6.92	6.91	7.0	7.95	7.95	7.93	8.0	9.10	9.09	9.07	9.1	10.33	10.32	**10.31**	10.4	11.71	11.70	11.69	11.8	13.33	13.32	13.31	13.4
		Hi PR	276	278	280	284.3	320	321	323	327.4	365	366	368	372.6	413	415	**417**	421.3	466	467	469	473.7	522	523	525	529.7
		Lo PR	122	124	127	132.1	130	131	134	139.4	136	138	141	145.8	142	143	**146**	151.2	147	148	151	156.5	153	155	158	163.1
	1300	MBh	28.8	29.2	30.0	31.3	28.6	29.0	29.8	31.0	27.9	28.2	29.1	30.3	26.6	27.0	27.8	29.1	25.1	25.5	26.3	27.6	23.7	24.1	24.9	26.2
		S/T	1.00	0.88	0.74	0.6	1.00	0.88	0.75	0.6	1.00	0.91	0.78	0.6	1.00	1.00	0.79	0.7	1.00	1.00	0.82	0.7	1.00	1.00	0.87	0.7
		ΔT	24.92	23.11	19.73	16.2	24.87	23.06	19.68	16.2	25.13	23.32	19.93	16.4	24.86	23.04	19.66	16.2	24.61	22.80	19.42	15.9	25.75	23.94	20.55	17.0
		kW	1.81	1.81	1.80	1.8	2.04	2.04	2.04	2.1	2.31	2.31	2.30	2.3	2.59	2.59	2.59	2.6	2.91	2.91	2.90	2.9	3.28	3.28	3.28	3.3
		Amps	7.01	7.00	6.98	7.1	8.03	8.02	8.00	8.1	9.17	9.16	9.15	9.2	10.41	10.40	10.38	10.5	11.79	11.78	11.76	11.8	13.41	13.40	13.38	13.5
		Hi PR	280	282	284	288.3	324	325	327	331.5	369	370	372	376.7	417	419	421	425.3	470	471	473	477.8	526	527	529	533.8
		Lo PR	126	128	131	135.7	133	135	138	143.0	140	141	144	149.4	145	147	150	154.8	150	152	155	160.2	157	159	162	166.8
85	800	MBh	27.8	28.2	29.1	30.3	27.6	28.0	28.8	30.1	26.9	27.3	28.1	29.3	25.7	26.0	26.9	28.1	24.1	24.5	25.4	26.6	22.8	23.2	24.0	25.2
		S/T	1.00	0.81	0.67	0.5	1.00	0.81	0.68	0.5	1.00	1.00	0.70	0.6	1.00	1.00	0.72	0.6	1.00	1.00	0.74	0.6	1.00	1.00	0.80	0.7
		ΔT	32.18	30.37	26.98	23.5	32.13	30.32	26.93	23.4	32.38	30.57	27.19	23.7	32.11	30.30	26.92	23.4	31.87	30.06	26.67	23.2	33.00	31.19	27.81	24.3
		kW	1.77	1.77	1.77	1.8	2.01	2.01	2.00	2.0	2.27	2.27	2.26	2.3	2.55	2.55	2.55	2.6	2.87	2.87	2.87	2.9	3.24	3.24	3.24	3.3
		Amps	6.85	6.84	6.82	6.9	7.87	7.86	7.84	7.9	9.01	9.00	8.99	9.1	10.25	10.24	10.22	10.3	11.63	11.62	11.60	11.7	13.25	13.24	13.22	13.3
		Hi PR	273	275	277	281.3	317	318	320	324.4	362	363	365	369.6	410	412	414	418.3	463	464	466	470.7	519	520	522	526.7
		Lo PR	121	123	126	130.8	128	130	133	138.1	135	136	139	144.5	140	142	145	149.9	146	147	150	155.2	152	154	157	161.9
	1050	MBh	28.5	28.8	29.7	30.9	28.2	28.6	29.4	30.7	27.5	27.9	28.7	30.0	26.3	26.6	27.5	28.7	24.7	25.1	26.0	27.2	23.4	23.8	24.6	25.8
		S/T	1.00	0.93	0.80	0.7	1.00	0.94	0.81	0.7	1.00	1.00	0.83	0.7	1.00	1.00	0.85	0.7	1.00	1.00	0.87	0.7	1.00	1.00	1.00	0.8
		ΔT	30.04	28.23	24.85	21.3	29.99	28.18	24.80	21.3	30.25	28.44	25.05	21.6	29.98	28.16	24.78	21.3	29.73	27.92	24.54	21.0	30.87	29.06	25.67	22.2
		kW	1.80	1.79	1.79	1.8	2.03	2.03	2.03	2.0	2.29	2.29	2.29	2.3	2.58	2.58	2.57	2.6	2.90	2.89	2.89	2.9	3.27	3.27	3.26	3.3
		Amps	6.95	6.94	6.93	7.0	7.97	7.97	7.95	8.0	9.12	9.11	9.09	9.2	10.35	10.34	10.33	10.4	11.73	11.72	11.71	11.8	13.35	13.34	13.33	13.4
		Hi PR	278	279	281	285.6	321	322	324	328.7	366	367	369	373.9	415	416	418	422.6	467	468	470	475.0	523	524	526	531.0
		Lo PR	124	126	129	133.9	132	133	136	141.2	138	139	142	147.6	143	145	148	153.0	149	150	153	158.3	155	157	160	164.9
	1300	MBh	29.3	29.7	30.5	31.7	29.0	29.4	30.2	31.5	28.3	28.7	29.5	30.8	27.1	27.5	28.3	29.5	25.6	26.0	26.8	28.0	24.2	24.6	25.4	26.7
		S/T	1.00	0.98	0.84	0.7	1.00	1.00	0.85	0.7	1.00	1.00	0.88	0.7	1.00	1.00	0.89	0.8	1.00	1.00	0.92	0.8	1.00	1.00	1.00	0.8
		ΔT	28.48	26.67	23.29	19.8	28.43	26.62	23.24	19.7	28.69	26.87	23.49	20.0	28.41	26.60	23.22	19.7	28.17	26.36	22.98	19.5	29.30	27.49	24.11	20.6
		kW	1.81	1.81	1.81	1.8	2.05	2.05	2.04	2.1	2.31	2.31	2.31	2.3	2.60	2.59	2.59	2.6	2.91	2.91	2.91	2.9	3.29	3.28	3.28	3.3
		Amps	7.03	7.02	7.00	7.1	8.05	8.04	8.02	8.1	9.19	9.18	9.17	9.2	10.43	10.42	10.40	10.5	11.81	11.80	11.78	11.9	13.43	13.42	13.40	13.5
		Hi PR	282	283	285	289.6	325	326	328	332.8	370	371	373	377.9	419	420	422	426.6	471	472	474	479.1	527	528	530	535.1
		Lo PR	128	129	132	137.5	135	137	140	144.8	142	143	146	151.2	147	148	152	156.6	152	154	157	162.0	159	160	163	168.6

IDB = Entering Indoor Dry Bulb Temperature

High and low pressures are measured at the liquid and suction access fittings.

Shaded area reflects AHRI (TVA) conditions.

kW = total system power

Amps: Unit amps (comp.+ evaporator + condenser fan motors)

			Outdoor Ambient Temperature																							
			65				75				85				95				105				115			
			Entering Indoor Wet Bulb Temperature																							
IDB	Airflow		59	63	67	71	59	63	67	71	59	63	67	71	59	63	67	71	59	63	67	71	59	63	67	71
70	1000	MBh	36.4	36.9	38.0	-	36.0	36.6	37.7	-	35.1	35.6	36.7	-	33.4	34.0	35.1	-	31.4	32.0	33.0	-	29.6	30.1	31.2	-
		S/T	0.56	0.48	0.34	-	0.56	0.49	0.35	-	0.59	0.51	0.37	-	0.61	0.53	0.39	-	1.00	0.55	0.42	-	1.00	0.60	0.47	-
		ΔT	22.02	20.06	16.41	-	21.97	20.01	16.35	-	22.24	20.29	16.63	-	21.95	19.99	16.33	-	21.69	19.73	16.07	-	22.91	20.96	17.30	-
		kW	2.40	2.39	2.39	-	2.70	2.70	2.69	-	3.04	3.04	3.03	-	3.40	3.40	3.40	-	3.81	3.81	3.81	-	4.29	4.29	4.29	-
		Amps	9.37	9.36	9.33	-	10.68	10.67	10.65	-	12.15	12.14	12.12	-	13.75	13.74	13.71	-	15.52	15.51	15.49	-	17.61	17.60	17.58	-
		Hi PR	259	260	262	-	300	301	303	-	343	344	346	-	389	391	392	-	439	440	442	-	493	494	496	-
		Lo PR	121	122	125	-	128	130	133	-	135	136	139	-	140	142	145	-	145	147	150	-	152	154	157	-
	1225	MBh	37.1	37.6	38.7	-	36.8	37.3	38.4	-	35.8	36.3	37.4	-	34.2	34.7	35.8	-	32.2	32.7	33.8	-	30.3	30.8	31.9	-
		S/T	0.67	0.59	0.45	-	0.67	0.60	0.46	-	0.70	0.62	0.49	-	0.72	0.64	0.51	-	1.00	0.66	0.53	-	1.00	0.71	0.58	-
		ΔT	19.99	18.03	14.38	-	19.94	17.98	14.32	-	20.21	18.26	14.60	-	19.92	17.96	14.30	-	19.66	17.70	14.04	-	20.88	18.93	15.27	-
		kW	2.42	2.42	2.42	-	2.73	2.72	2.72	-	3.07	3.06	3.06	-	3.43	3.43	3.42	-	3.84	3.84	3.83	-	4.32	4.32	4.31	-
		Amps	9.48	9.47	9.45	-	10.80	10.79	10.77	-	12.27	12.26	12.24	-	13.86	13.85	13.83	-	15.64	15.63	15.61	-	17.73	17.72	17.69	-
		Hi PR	263	264	266	-	304	305	307	-	347	348	350	-	393	394	396	-	443	444	446	-	496	497	499	-
		Lo PR	124	125	128	-	131	132	136	-	137	139	142	-	143	144	148	-	148	150	153	-	155	157	160	-
	1500	MBh	38.3	38.9	40.0	-	38.0	38.5	39.6	-	37.1	37.6	38.7	-	35.4	35.9	37.0	-	33.4	33.9	35.0	-	31.6	32.1	33.2	-
		S/T	0.71	0.64	0.50	-	0.72	0.64	0.51	-	0.74	0.67	0.53	-	1.00	0.69	0.55	-	1.00	0.71	0.57	-	1.00	0.76	0.62	-
		ΔT	18.15	16.19	12.54	-	18.10	16.14	12.48	-	18.37	16.41	12.76	-	18.08	16.12	12.46	-	17.82	15.86	12.20	-	19.04	17.08	13.43	-
		kW	2.45	2.45	2.44	-	2.75	2.75	2.74	-	3.09	3.09	3.08	-	3.46	3.45	3.45	-	3.86	3.86	3.86	-	4.34	4.34	4.34	-
		Amps	9.59	9.58	9.56	-	10.91	10.90	10.87	-	12.38	12.37	12.34	-	13.97	13.96	13.94	-	15.75	15.74	15.71	-	17.83	17.82	17.80	-
		Hi PR	267	268	270	-	308	309	311	-	351	352	354	-	397	398	400	-	447	448	450	-	501	502	504	-
		Lo PR	128	129	132	-	135	137	140	-	142	143	146	-	147	149	152	-	152	154	157	-	159	161	164	-
75	1000	MBh	36.4	36.9	38.0	39.7	36.1	36.6	37.7	39.4	35.1	35.6	36.7	38.4	33.5	34.0	35.1	36.7	31.5	32.0	33.1	34.7	29.6	30.1	31.2	32.9
		S/T	0.68	0.61	0.47	0.3	0.69	0.61	0.48	0.3	1.00	0.64	0.50	0.4	1.00	0.66	0.52	0.4	1.00	0.68	0.55	0.4	1.00	0.73	0.60	0.5
		ΔT	26.33	24.37	20.71	16.9	26.28	24.32	20.66	16.9	26.55	24.59	20.94	17.1	26.26	24.30	20.64	16.9	25.99	24.04	20.38	16.6	27.22	25.26	21.60	17.8
		kW	2.40	2.39	2.39	2.4	2.70	2.70	2.69	2.7	3.04	3.03	3.03	3.1	3.40	3.40	3.39	3.4	3.81	3.81	3.80	3.8	4.29	4.29	4.28	4.3
		Amps	9.36	9.35	9.32	9.4	10.67	10.66	10.64	10.7	12.15	12.14	12.11	12.2	13.74	13.73	13.70	13.8	15.52	15.50	15.48	15.6	17.60	17.59	17.57	17.7
		Hi PR	259	260	262	266.6	300	301	303	307.7	343	344	346	350.8	390	391	393	397.1	440	441	443	447.1	493	494	496	500.4
		Lo PR	121	122	125	130.5	128	130	133	138.0	135	136	139	144.4	140	142	145	149.9	146	147	150	155.3	152	154	157	162.1
	1225	MBh	37.1	37.6	38.7	40.4	36.8	37.3	38.4	40.1	35.8	36.4	37.5	39.1	34.2	34.7	35.8	37.5	32.2	32.7	33.8	35.5	30.4	30.9	32.0	33.6
		S/T	0.80	0.72	0.58	0.4	0.80	0.73	0.59	0.4	1.00	0.75	0.62	0.5	1.00	0.77	0.63	0.5	1.00	0.79	0.66	0.5	1.00	1.00	0.71	0.6
		ΔT	24.30	22.34	18.68	14.9	24.25	22.29	18.63	14.8	24.52	22.56	18.91	15.1	24.23	22.27	18.61	14.8	23.96	22.01	18.35	14.6	25.19	23.23	19.57	15.8
		kW	2.42	2.42	2.41	2.4	2.73	2.72	2.72	2.7	3.06	3.06	3.06	3.1	3.43	3.43	3.42	3.4	3.84	3.84	3.83	3.9	4.32	4.32	4.31	4.3
		Amps	9.47	9.46	9.44	9.5	10.79	10.78	10.76	10.9	12.26	12.25	12.23	12.3	13.85	13.84	13.82	13.9	15.63	15.62	15.60	15.7	17.72	17.71	17.69	17.8
		Hi PR	263	264	266	270.3	304	305	307	311.4	347	348	350	354.4	393	394	396	400.7	443	444	446	450.7	497	498	499	504.0
		Lo PR	124	125	128	133.4	131	132	136	140.8	137	139	142	147.3	143	144	148	152.7	148	150	153	158.1	155	157	160	164.9
	1500	MBh	38.4	38.9	40.0	41.6	38.0	38.6	39.7	41.3	37.1	37.6	38.7	40.4	35.4	36.0	37.0	38.7	33.4	33.9	35.0	36.7	31.6	32.1	33.2	34.9
		S/T	0.84	0.76	0.63	0.5	1.00	0.77	0.64	0.5	1.00	0.80	0.66	0.5	1.00	0.82	0.68	0.5	1.00	0.84	0.70	0.6	1.00	1.00	0.75	0.6
		ΔT	22.46	20.50	16.84	13.1	22.40	20.45	16.79	13.0	22.68	20.72	17.06	13.3	22.38	20.43	16.77	13.0	22.12	20.16	16.51	12.7	23.35	21.39	17.73	13.9
		kW	2.45	2.44	2.44	2.5	2.75	2.75	2.74	2.8	3.09	3.09	3.08	3.1	3.45	3.45	3.45	3.5	3.86	3.86	3.86	3.9	4.34	4.34	4.34	4.4
		Amps	9.58	9.57	9.55	9.6	10.90	10.89	10.87	11.0	12.37	12.36	12.34	12.4	13.96	13.95	13.93	14.0	15.74	15.73	15.71	15.8	17.82	17.81	17.79	17.9
		Hi PR	267	268	270	274.5	308	309	311	315.6	351	352	354	358.6	397	399	400	405.0	447	449	450	455.0	501	502	504	508.3
		Lo PR	128	129	132	137.5	135	137	140	144.9	142	143	146	151.4	147	149	152	156.9	152	154	157	162.3	159	161	164	169.0

IDB = Entering Indoor Dry Bulb Temperature

High and low pressures are measured at the liquid and suction access fittings.

Shaded area reflects ACCA (TVA) conditions.

kW = total system power

Amps: Unit amps (comp.+ evaporator + condenser fan motors)

Expanded Cooling Data — APCH33631 (cont.)

			Outdoor Ambient Temperature																							
			65				75				85				95				105				115			
			Entering Indoor Wet Bulb Temperature																							
IDB	Airflow		59	63	67	71	59	63	67	71	59	63	67	71	59	63	67	71	59	63	67	71	59	63	67	71
80	1000	MBh	36.6	37.1	38.2	39.9	36.3	36.8	37.9	39.5	35.3	35.8	36.9	38.6	33.7	34.2	35.3	36.9	31.6	32.2	33.3	34.9	29.8	30.3	31.4	33.1
		S/T	0.81	0.73	0.60	0.5	1.00	0.74	0.60	0.5	1.00	0.77	0.63	0.5	1.00	0.78	0.65	0.5	1.00	1.00	0.67	0.5	1.00	1.00	0.72	0.6
		ΔT	30.66	28.71	25.05	21.3	30.61	28.65	25.00	21.2	30.89	28.93	25.27	21.5	30.59	28.63	24.98	21.2	30.33	28.37	24.71	20.9	31.55	29.60	25.94	22.2
		kW	2.40	2.39	2.39	2.4	2.70	2.70	2.69	2.7	3.04	3.04	3.03	3.1	3.40	3.40	3.40	3.4	3.81	3.81	3.81	3.8	4.29	4.29	4.29	4.3
		Amps	9.36	9.35	9.33	9.4	10.68	10.67	10.65	10.7	12.15	12.14	12.12	12.2	13.74	13.73	13.71	13.8	15.52	15.51	15.49	15.6	17.61	17.60	17.58	17.7
		Hi PR	260	261	263	267.1	301	302	304	308.2	344	345	347	351.2	390	391	393	397.6	440	441	443	447.5	493	494	496	500.9
		Lo PR	121	123	126	131.1	129	130	133	138.5	135	137	140	145.0	141	142	145	150.5	146	148	151	155.8	153	154	157	162.6
	1225	MBh	37.3	37.8	38.9	40.6	37.0	37.5	38.6	40.3	36.0	36.6	37.6	39.3	34.4	34.9	36.0	37.7	32.4	32.9	34.0	35.7	30.5	31.1	32.2	33.8
		S/T	1.00	0.85	0.71	0.6	1.00	0.85	0.72	0.6	1.00	0.88	0.74	0.6	1.00	0.90	0.76	0.6	1.00	1.00	0.78	0.6	1.00	1.00	0.83	0.7
		ΔT	28.63	26.68	23.02	19.2	28.58	26.62	22.97	19.2	28.86	26.90	23.24	19.5	28.56	26.60	22.95	19.2	28.30	26.34	22.68	18.9	29.53	27.57	23.91	20.1
		kW	2.42	2.42	2.42	2.4	2.73	2.72	2.72	2.7	3.07	3.06	3.06	3.1	3.43	3.43	3.42	3.4	3.84	3.84	3.83	3.9	4.32	4.32	4.31	4.3
		Amps	9.48	9.47	9.45	9.5	10.80	10.79	10.77	10.9	12.27	12.26	12.24	12.3	13.86	13.85	13.83	13.9	15.64	15.63	15.61	15.7	17.73	17.72	17.69	17.8
		Hi PR	263	264	266	270.8	304	305	307	311.8	347	349	350	354.9	394	395	397	401.2	444	445	447	451.2	497	498	500	504.5
		Lo PR	124	126	129	133.9	132	133	136	141.3	138	140	143	147.8	143	145	148	153.3	149	150	153	158.7	156	157	160	165.4
	1500	MBh	38.6	39.1	40.2	41.8	38.2	38.7	39.8	41.5	37.3	37.8	38.9	40.6	35.6	36.1	37.2	38.9	33.6	34.1	35.2	36.9	31.8	32.3	33.4	35.1
		S/T	1.00	0.89	0.75	0.6	1.00	0.90	0.76	0.6	1.00	0.92	0.79	0.6	1.00	1.00	0.81	0.7	1.00	1.00	0.83	0.7	1.00	1.00	0.88	0.7
		ΔT	26.79	24.83	21.18	17.4	26.74	24.78	21.12	17.3	27.01	25.06	21.40	17.6	26.72	24.76	21.10	17.3	26.46	24.50	20.84	17.1	27.68	25.73	22.07	18.3
		kW	2.45	2.45	2.44	2.5	2.75	2.75	2.74	2.8	3.09	3.09	3.08	3.1	3.46	3.45	3.45	3.5	3.86	3.86	3.86	3.9	4.34	4.34	4.34	4.4
		Amps	9.59	9.58	9.55	9.7	10.90	10.89	10.87	11.0	12.38	12.37	12.34	12.4	13.97	13.96	13.93	14.0	15.75	15.74	15.71	15.8	17.83	17.82	17.80	17.9
		Hi PR	268	269	270	275.0	309	310	312	316.1	352	353	355	359.1	398	399	401	405.5	448	449	451	455.4	501	502	504	508.8
		Lo PR	128	130	133	138.0	136	137	140	145.4	142	144	147	151.9	148	149	152	157.4	153	155	158	162.8	160	161	164	169.5
85	1000	MBh	37.2	37.7	38.8	40.5	36.9	37.4	38.5	40.2	35.9	36.4	37.5	39.2	34.3	34.8	35.9	37.6	32.3	32.8	33.9	35.5	30.4	30.9	32.0	33.7
		S/T	1.00	0.84	0.70	0.6	1.00	0.84	0.71	0.6	1.00	1.00	0.73	0.6	1.00	1.00	0.75	0.6	1.00	1.00	0.77	0.6	1.00	1.00	1.00	0.7
		ΔT	34.51	32.55	28.89	25.1	34.46	32.50	28.84	25.1	34.73	32.77	29.12	25.3	34.44	32.48	28.82	25.0	34.17	32.22	28.56	24.8	35.40	33.44	29.78	26.0
		kW	2.40	2.40	2.40	2.4	2.71	2.70	2.70	2.7	3.04	3.04	3.04	3.1	3.41	3.41	3.40	3.4	3.82	3.82	3.81	3.8	4.30	4.30	4.29	4.3
		Amps	9.39	9.38	9.36	9.5	10.71	10.70	10.67	10.8	12.18	12.17	12.14	12.2	13.77	13.76	13.74	13.8	15.55	15.54	15.51	15.6	17.63	17.62	17.60	17.7
		Hi PR	261	262	264	268.3	302	303	305	309.4	345	346	348	352.5	391	392	394	398.8	441	442	444	448.8	495	496	498	502.1
		Lo PR	123	125	128	132.9	131	132	135	140.3	137	139	142	146.8	143	144	147	152.3	148	149	152	157.7	155	156	159	164.4
	1225	MBh	37.9	38.5	39.5	41.2	37.6	38.1	39.2	40.9	36.7	37.2	38.3	39.9	35.0	35.5	36.6	38.3	33.0	33.5	34.6	36.3	31.2	31.7	32.8	34.4
		S/T	1.00	0.95	0.81	0.7	1.00	0.95	0.82	0.7	1.00	1.00	0.84	0.7	1.00	1.00	0.86	0.7	1.00	1.00	0.88	0.7	1.00	1.00	1.00	0.8
		ΔT	32.48	30.52	26.86	23.1	32.43	30.47	26.81	23.0	32.70	30.74	27.09	23.3	32.41	30.45	26.79	23.0	32.14	30.19	26.53	22.7	33.37	31.41	27.76	24.0
		kW	2.43	2.43	2.42	2.4	2.73	2.73	2.73	2.7	3.07	3.07	3.06	3.1	3.44	3.43	3.43	3.5	3.85	3.84	3.84	3.9	4.33	4.32	4.32	4.3
		Amps	9.51	9.50	9.47	9.6	10.82	10.81	10.79	10.9	12.30	12.28	12.26	12.4	13.89	13.88	13.85	14.0	15.66	15.65	15.63	15.7	17.75	17.74	17.72	17.8
		Hi PR	264	266	267	272.0	306	307	309	313.1	349	350	352	356.1	395	396	398	402.4	445	446	448	452.4	498	499	501	505.7
		Lo PR	126	127	131	135.7	133	135	138	143.1	140	141	144	149.6	145	147	150	155.1	151	152	155	160.5	157	159	162	167.2
	1500	MBh	39.2	39.7	40.8	42.5	38.8	39.4	40.5	42.1	37.9	38.4	39.5	41.2	36.2	36.8	37.9	39.5	34.2	34.8	35.8	37.5	32.4	32.9	34.0	35.7
		S/T	1.00	0.99	0.86	0.7	1.00	1.00	0.86	0.7	1.00	1.00	0.89	0.7	1.00	1.00	0.91	0.8	1.00	1.00	1.00	0.8	1.00	1.00	1.00	0.8
		ΔT	30.64	28.68	25.02	21.2	30.58	28.63	24.97	21.2	30.86	28.90	25.24	21.5	30.56	28.61	24.95	21.2	30.30	28.34	24.69	20.9	31.53	29.57	25.91	22.1
		kW	2.45	2.45	2.45	2.5	2.76	2.75	2.75	2.8	3.10	3.09	3.09	3.1	3.46	3.46	3.45	3.5	3.87	3.87	3.86	3.9	4.35	4.35	4.34	4.4
		Amps	9.61	9.60	9.58	9.7	10.93	10.92	10.90	11.0	12.40	12.39	12.37	12.5	13.99	13.98	13.96	14.1	15.77	15.76	15.74	15.8	17.86	17.85	17.82	17.9
		Hi PR	269	270	272	276.2	310	311	313	317.3	353	354	356	360.4	399	400	402	406.7	449	450	452	456.7	502	504	505	510.0
		Lo PR	130	132	135	139.9	137	139	142	147.3	144	145	149	153.8	149	151	154	159.2	155	156	159	164.6	162	163	166	171.4

IDB = Entering Indoor Dry Bulb Temperature

High and low pressures are measured at the liquid and suction access fittings.

Shaded area reflects AHRI (TVA) conditions.

kW = total system power

Amps: Unit amps (comp.+ evaporator + condenser fan motors)

			Outdoor Ambient Temperature																							
			65				75				85				95				105				115			
			Entering Indoor Wet Bulb Temperature																							
IDB	Airflow		59	63	67	71	59	63	67	71	59	63	67	71	59	63	67	71	59	63	67	71	59	63	67	71
70	1000	MBh	39.3	39.9	41.0	-	38.9	39.5	40.7	-	37.9	38.5	39.7	-	36.1	36.7	37.9	-	33.9	34.5	35.7	-	32.0	32.5	33.7	-
		S/T	0.55	0.47	0.33	-	0.56	0.48	0.34	-	0.58	0.50	0.36	-	1.00	0.53	0.38	-	1.00	0.55	0.41	-	1.00	0.60	0.46	-
		ΔT	20.83	19.01	15.61	-	20.78	18.96	15.56	-	21.03	19.21	15.81	-	20.76	18.94	15.54	-	20.51	18.69	15.30	-	21.65	19.83	16.44	-
		kW	2.59	2.59	2.59	-	2.92	2.92	2.91	-	3.29	3.28	3.28	-	3.68	3.68	3.67	-	4.12	4.12	4.12	-	4.64	4.64	4.64	-
		Amps	9.93	9.92	9.90	-	11.36	11.35	11.32	-	12.95	12.94	12.91	-	14.67	14.66	14.63	-	16.59	16.58	16.56	-	18.85	18.84	18.81	-
		Hi PR	257	258	260	-	298	299	301	-	341	342	344	-	387	388	390	-	437	438	440	-	490	491	493	-
		Lo PR	123	125	128	-	131	132	136	-	138	139	142	-	143	145	148	-	149	150	153	-	156	157	160	-
	1250	MBh	40.2	40.8	41.9	-	39.8	40.4	41.6	-	38.8	39.4	40.6	-	37.0	37.6	38.8	-	34.8	35.4	36.6	-	32.9	33.4	34.6	-
		S/T	0.69	0.61	0.47	-	0.70	0.62	0.48	-	0.73	0.65	0.51	-	1.00	0.67	0.53	-	1.00	0.69	0.55	-	1.00	0.74	0.60	-
		ΔT	18.58	16.76	13.36	-	18.53	16.71	13.31	-	18.78	16.96	13.57	-	18.51	16.69	13.29	-	18.27	16.45	13.05	-	19.41	17.59	14.19	-
		kW	2.63	2.63	2.62	-	2.96	2.95	2.95	-	3.32	3.32	3.31	-	3.72	3.71	3.71	-	4.16	4.16	4.15	-	4.68	4.68	4.67	-
		Amps	10.08	10.07	10.05	-	11.51	11.50	11.47	-	13.10	13.09	13.06	-	14.82	14.81	14.78	-	16.74	16.73	16.71	-	19.00	18.99	18.96	-
		Hi PR	261	263	264	-	302	304	305	-	345	346	348	-	391	393	394	-	441	442	444	-	494	495	497	-
		Lo PR	127	128	131	-	134	136	139	-	141	142	146	-	146	148	151	-	152	154	157	-	159	160	164	-
	1500	MBh	41.5	42.0	43.2	-	41.1	41.7	42.8	-	40.1	40.6	41.8	-	38.3	38.8	40.0	-	36.1	36.7	37.8	-	34.1	34.7	35.9	-
		S/T	0.74	0.66	0.52	-	0.75	0.67	0.53	-	1.00	0.69	0.55	-	1.00	0.71	0.57	-	1.00	0.74	0.60	-	1.00	1.00	0.65	-
		ΔT	16.95	15.13	11.74	-	16.90	15.08	11.69	-	17.16	15.34	11.94	-	16.89	15.07	11.67	-	16.64	14.82	11.42	-	17.78	15.96	12.56	-
		kW	2.65	2.65	2.64	-	2.98	2.98	2.97	-	3.35	3.34	3.34	-	3.74	3.74	3.73	-	4.18	4.18	4.18	-	4.70	4.70	4.70	-
		Amps	10.19	10.18	10.16	-	11.62	11.60	11.58	-	13.21	13.20	13.17	-	14.93	14.92	14.89	-	16.85	16.84	16.82	-	19.11	19.10	19.07	-
		Hi PR	265	267	268	-	306	308	309	-	349	350	352	-	395	397	398	-	445	446	448	-	498	499	501	-
		Lo PR	131	132	135	-	138	140	143	-	145	146	150	-	150	152	155	-	156	157	161	-	163	164	168	-
75	1000	MBh	39.3	39.9	41.1	42.9	39.0	39.5	40.7	42.5	37.9	38.5	39.7	41.5	36.1	36.7	37.9	39.7	34.0	34.5	35.7	37.5	32.0	32.5	33.7	35.5
		S/T	0.69	0.61	0.47	0.3	0.69	0.61	0.47	0.3	1.00	0.64	0.50	0.3	1.00	0.66	0.52	0.4	1.00	0.68	0.54	0.4	1.00	1.00	0.59	0.4
		ΔT	24.83	23.01	19.61	16.1	24.78	22.96	19.56	16.0	25.03	23.21	19.81	16.3	24.76	22.94	19.54	16.0	24.51	22.69	19.30	15.8	25.65	23.83	20.44	16.9
		kW	2.59	2.59	2.58	2.6	2.92	2.92	2.91	2.9	3.28	3.28	3.28	3.3	3.68	3.68	3.67	3.7	4.12	4.12	4.11	4.1	4.64	4.64	4.63	4.7
		Amps	9.92	9.91	9.89	10.0	11.35	11.34	11.31	11.4	12.94	12.93	12.90	13.0	14.66	14.65	14.62	14.7	16.58	16.57	16.55	16.7	18.84	18.83	18.80	18.9
		Hi PR	257	259	260	264.9	298	300	301	305.8	341	342	344	348.7	387	389	390	394.9	437	438	440	444.6	490	491	493	497.7
		Lo PR	123	125	128	133.3	131	132	136	140.9	138	139	142	147.6	143	145	148	153.2	149	150	153	158.7	156	157	160	165.6
	1250	MBh	40.2	40.8	42.0	43.8	39.9	40.4	41.6	43.4	38.8	39.4	40.6	42.4	37.0	**37.6**	38.8	40.6	34.9	35.4	36.6	38.4	32.9	33.4	34.6	36.4
		S/T	0.83	0.75	0.61	0.5	1.00	0.75	0.61	0.5	1.00	0.78	0.64	0.5	1.00	**0.80**	0.66	0.5	1.00	0.82	0.68	0.5	1.00	1.00	0.74	0.6
		ΔT	22.58	20.76	17.36	13.8	22.53	20.71	17.31	13.8	22.79	20.97	17.57	14.0	22.51	**20.69**	17.29	13.8	22.27	20.45	17.05	13.5	23.41	21.59	18.19	14.7
		kW	2.63	2.62	2.62	2.6	2.95	2.95	2.95	3.0	3.32	3.32	3.31	3.3	3.72	**3.71**	3.71	3.7	4.16	4.16	4.15	4.2	4.68	4.67	4.67	4.7
		Amps	10.07	10.06	10.04	10.1	11.50	11.49	11.46	11.6	13.09	13.08	13.05	13.2	14.81	**14.80**	14.77	14.9	16.73	16.72	16.70	16.8	18.99	18.98	18.95	19.1
		Hi PR	262	263	265	269.2	303	304	306	310.1	345	347	348	353.0	392	**393**	395	399.1	441	443	444	448.9	495	496	497	502.0
		Lo PR	127	128	131	136.7	134	136	139	144.2	141	142	146	150.9	146	**148**	151	156.5	152	154	157	162.0	159	160	164	168.9
	1500	MBh	41.5	42.0	43.2	45.0	41.1	41.7	42.9	44.7	40.1	40.6	41.8	43.6	38.3	38.9	40.0	41.9	36.1	36.7	37.9	39.7	34.1	34.7	35.9	37.7
		S/T	0.87	0.79	0.65	0.5	1.00	0.80	0.66	0.5	1.00	0.83	0.69	0.5	1.00	0.85	0.71	0.6	1.00	1.00	0.73	0.6	1.00	1.00	0.78	0.6
		ΔT	20.96	19.14	15.74	12.2	20.91	19.09	15.69	12.2	21.16	19.34	15.94	12.4	20.89	19.07	15.67	12.1	20.64	18.82	15.43	11.9	21.78	19.96	16.57	13.0
		kW	2.65	2.65	2.64	2.7	2.98	2.98	2.97	3.0	3.34	3.34	3.34	3.4	3.74	3.74	3.73	3.8	4.18	4.18	4.17	4.2	4.70	4.70	4.69	4.7
		Amps	10.18	10.17	10.15	10.3	11.61	11.60	11.57	11.7	13.20	13.19	13.16	13.3	14.92	14.91	14.88	15.0	16.84	16.83	16.81	16.9	19.10	19.09	19.06	19.2
		Hi PR	266	267	269	273.2	307	308	310	314.1	349	351	352	356.9	396	397	399	403.1	445	447	448	452.9	499	500	501	506.0
		Lo PR	131	132	135	140.6	138	140	143	148.2	145	146	150	154.9	150	152	155	160.5	156	158	161	166.0	163	164	168	172.9

IDB = Entering Indoor Dry Bulb Temperature

High and low pressures are measured at the liquid and suction access fittings.

Shaded area reflects ACCA (TVA) conditions.

kW = total system power

Amps: Unit amps (comp.+ evaporator + condenser fan motors)

Expanded Cooling Data — APCH34231 (cont.)

			Outdoor Ambient Temperature																							
			65				75				85				95				105				115			
			Entering Indoor Wet Bulb Temperature																							
IDB	Airflow		59	63	67	71	59	63	67	71	59	63	67	71	59	63	67	71	59	63	67	71	59	63	67	71
80	1000	MBh	39.5	40.1	41.3	43.1	39.2	39.7	40.9	42.7	38.1	38.7	39.9	41.7	36.4	36.9	38.1	39.9	34.2	34.7	35.9	37.7	32.2	32.7	33.9	35.7
		S/T	1.00	0.74	0.60	0.4	1.00	0.74	0.60	0.5	1.00	0.77	0.63	0.5	1.00	0.79	0.65	0.5	1.00	1.00	0.67	0.5	1.00	1.00	0.73	0.6
		ΔT	28.85	27.04	23.64	20.1	28.81	26.99	23.59	20.1	29.06	27.24	23.84	20.3	28.79	26.97	23.57	20.0	28.54	26.72	23.33	19.8	29.68	27.86	24.47	20.9
		kW	2.59	2.59	2.58	2.6	2.92	2.92	2.91	2.9	3.29	3.28	3.28	3.3	3.68	3.68	3.67	3.7	4.12	4.12	4.12	4.1	4.64	4.64	4.64	4.7
		Amps	9.93	9.92	9.89	10.0	11.35	11.34	11.32	11.4	12.94	12.93	12.91	13.0	14.67	14.65	14.63	14.7	16.59	16.58	16.55	16.7	18.85	18.83	18.81	18.9
		Hi PR	258	259	261	265.4	299	300	302	306.3	342	343	345	349.2	388	389	391	395.3	438	439	441	445.1	491	492	494	498.2
		Lo PR	124	125	129	133.9	131	133	136	141.5	138	140	143	148.1	144	145	148	153.7	149	151	154	159.3	156	158	161	166.2
	1250	MBh	40.4	41.0	42.2	44.0	40.1	40.6	41.8	43.6	39.0	39.6	40.8	42.6	37.3	37.8	**39.0**	40.8	35.1	35.6	36.8	38.6	33.1	33.6	34.8	36.6
		S/T	1.00	0.88	0.74	0.6	1.00	0.89	0.74	0.6	1.00	0.91	0.77	0.6	1.00	1.00	**0.79**	0.6	1.00	1.00	0.81	0.7	1.00	1.00	0.87	0.7
		ΔT	26.61	24.79	21.39	17.9	26.56	24.74	21.34	17.8	26.81	24.99	21.60	18.1	26.54	24.72	**21.32**	17.8	26.30	24.48	21.08	17.6	27.44	25.62	22.22	18.7
		kW	2.63	2.63	2.62	2.6	2.96	2.95	2.95	3.0	3.32	3.32	3.31	3.3	3.72	3.71	**3.71**	3.7	4.16	4.16	4.15	4.2	4.68	4.68	4.67	4.7
		Amps	10.08	10.07	10.05	10.2	11.51	11.49	11.47	11.6	13.10	13.08	13.06	13.2	14.82	14.81	**14.78**	14.9	16.74	16.73	16.70	16.8	19.00	18.99	18.96	19.1
		Hi PR	262	263	265	269.7	303	304	306	310.6	346	347	349	353.4	392	393	**395**	399.6	442	443	445	449.4	495	496	498	502.5
		Lo PR	127	129	132	137.2	135	136	139	144.8	141	143	146	151.4	147	149	**152**	157.1	153	154	157	162.6	159	161	164	169.5
	1500	MBh	41.7	42.2	43.4	45.2	41.3	41.9	43.1	44.9	40.3	40.9	42.0	43.8	38.5	39.1	40.3	42.1	36.3	36.9	38.1	39.9	34.3	34.9	36.1	37.9
		S/T	1.00	0.93	0.78	0.6	1.00	0.93	0.79	0.6	1.00	1.00	0.82	0.7	1.00	1.00	0.84	0.7	1.00	1.00	0.86	0.7	1.00	1.00	1.00	0.8
		ΔT	24.98	23.16	19.77	16.2	24.93	23.11	19.72	16.2	25.19	23.37	19.97	16.5	24.92	23.10	19.70	16.2	24.67	22.85	19.45	15.9	25.81	23.99	20.59	17.1
		kW	2.65	2.65	2.64	2.7	2.98	2.98	2.97	3.0	3.35	3.34	3.34	3.4	3.74	3.74	3.73	3.8	4.18	4.18	4.18	4.2	4.70	4.70	4.70	4.7
		Amps	10.19	10.18	10.15	10.3	11.61	11.60	11.58	11.7	13.20	13.19	13.17	13.3	14.93	14.91	14.89	15.0	16.85	16.84	16.81	16.9	19.11	19.09	19.07	19.2
		Hi PR	266	267	269	273.6	307	308	310	314.6	350	351	353	357.4	396	397	399	403.6	446	447	449	453.3	499	500	502	506.4
		Lo PR	131	133	136	141.2	139	140	143	148.8	145	147	150	155.4	151	153	156	161.0	157	158	161	166.6	163	165	168	173.5
85	1000	MBh	40.2	40.8	41.9	43.8	39.8	40.4	41.6	43.4	38.8	39.4	40.6	42.4	37.0	37.6	38.8	40.6	34.8	35.4	36.6	38.4	32.9	33.4	34.6	36.4
		S/T	1.00	0.84	0.70	0.6	1.00	0.85	0.71	0.6	1.00	1.00	0.73	0.6	1.00	1.00	0.75	0.6	1.00	1.00	0.78	0.6	1.00	1.00	1.00	0.7
		ΔT	32.43	30.61	27.21	23.7	32.38	30.56	27.16	23.6	32.63	30.81	27.42	23.9	32.36	30.54	27.14	23.6	32.12	30.30	26.90	23.4	33.26	31.44	28.04	24.5
		kW	2.60	2.60	2.59	2.6	2.93	2.92	2.92	2.9	3.29	3.29	3.28	3.3	3.69	3.69	3.68	3.7	4.13	4.13	4.12	4.1	4.65	4.65	4.64	4.7
		Amps	9.96	9.95	9.92	10.0	11.38	11.37	11.35	11.5	12.97	12.96	12.94	13.0	14.69	14.68	14.66	14.8	16.62	16.61	16.58	16.7	18.87	18.86	18.84	18.9
		Hi PR	259	260	262	266.6	300	301	303	307.5	343	344	346	350.4	389	390	392	396.6	439	440	442	446.3	492	493	495	499.4
		Lo PR	126	127	130	135.8	133	135	138	143.4	140	142	145	150.0	146	147	150	155.6	151	153	156	161.1	158	160	163	168.0
	1250	MBh	41.1	41.7	42.8	44.7	40.7	41.3	42.5	44.3	39.7	40.3	41.5	43.3	37.9	38.5	39.7	41.5	35.7	36.3	37.5	39.3	33.8	34.3	35.5	37.3
		S/T	1.00	0.98	0.84	0.7	1.00	1.00	0.85	0.7	1.00	1.00	0.88	0.7	1.00	1.00	0.90	0.7	1.00	1.00	1.00	0.8	1.00	1.00	1.00	0.8
		ΔT	30.18	28.36	24.96	21.4	30.13	28.31	24.91	21.4	30.39	28.57	25.17	21.6	30.11	28.29	24.90	21.4	29.87	28.05	24.65	21.1	31.01	29.19	25.79	22.3
		kW	2.63	2.63	2.63	2.7	2.96	2.96	2.95	3.0	3.33	3.32	3.32	3.3	3.72	3.72	3.72	3.7	4.17	4.16	4.16	4.2	4.68	4.68	4.68	4.7
		Amps	10.11	10.10	10.07	10.2	11.53	11.52	11.50	11.6	13.12	13.11	13.09	13.2	14.84	14.83	14.81	14.9	16.77	16.76	16.73	16.8	19.02	19.01	18.99	19.1
		Hi PR	263	265	266	270.9	304	305	307	311.8	347	348	350	354.7	393	394	396	400.8	443	444	446	450.6	496	497	499	503.7
		Lo PR	129	131	134	139.1	137	138	141	146.7	143	145	148	153.3	149	150	154	158.9	154	156	159	164.5	161	163	166	171.4
	1500	MBh	42.3	42.9	44.1	45.9	42.0	42.6	43.7	45.6	41.0	41.5	42.7	44.5	39.2	39.7	40.9	42.7	37.0	37.6	38.7	40.6	35.0	35.6	36.8	38.6
		S/T	1.00	1.00	0.89	0.7	1.00	1.00	0.90	0.7	1.00	1.00	0.92	0.8	1.00	1.00	0.94	0.8	1.00	1.00	1.00	0.8	1.00	1.00	1.00	0.9
		ΔT	28.56	26.74	23.34	19.8	28.51	26.69	23.29	19.8	28.76	26.94	23.55	20.0	28.49	26.67	23.27	19.8	28.25	26.43	23.03	19.5	29.38	27.56	24.17	20.6
		kW	2.66	2.66	2.65	2.7	2.99	2.98	2.98	3.0	3.35	3.35	3.34	3.4	3.75	3.75	3.74	3.8	4.19	4.19	4.18	4.2	4.71	4.71	4.70	4.7
		Amps	10.22	10.21	10.18	10.3	11.64	11.63	11.61	11.7	13.23	13.22	13.20	13.3	14.95	14.94	14.92	15.0	16.88	16.87	16.84	16.9	19.13	19.12	19.10	19.2
		Hi PR	267	269	270	274.9	308	309	311	315.8	351	352	354	358.6	397	398	400	404.8	447	448	450	454.6	500	501	503	507.7
		Lo PR	133	135	138	143.0	141	142	145	150.6	147	149	152	157.3	153	154	158	162.9	158	160	163	168.4	165	167	170	175.3

IDB = Entering Indoor Dry Bulb Temperature

High and low pressures are measured at the liquid and suction access fittings.

Shaded area reflects AHRI (TVA) conditions.

kW = total system power

Amps: Unit amps (comp.+ evaporator + condenser fan motors)

			Outdoor Ambient Temperature																							
			65				75				85				95				105				115			
			Entering Indoor Wet Bulb Temperature																							
IDB	Airflow		59	63	67	71	59	63	67	71	59	63	67	71	59	63	67	71	59	63	67	71	59	63	67	71
70	1400	MBh	45.6	46.2	47.6	-	45.2	45.8	47.2	-	44.0	44.6	46.0	-	41.9	42.6	43.9	-	39.4	40.1	41.4	-	37.1	37.8	39.1	-
		S/T	0.58	0.51	0.37	-	0.59	0.51	0.37	-	0.62	0.54	0.40	-	1.00	0.56	0.42	-	1.00	0.58	0.44	-	1.00	0.63	0.49	-
		ΔT	20.31	18.48	15.06	-	20.26	18.43	15.01	-	20.52	18.69	15.26	-	20.24	18.41	14.99	-	20.00	18.17	14.74	-	21.15	19.31	15.89	-
		kW	3.01	3.01	3.00	-	3.39	3.38	3.38	-	3.81	3.80	3.80	-	4.26	4.26	4.25	-	4.77	4.77	4.76	-	5.36	5.36	5.35	-
		Amps	11.28	11.27	11.24	-	12.92	12.90	12.88	-	14.74	14.73	14.70	-	16.72	16.70	16.68	-	18.92	18.91	18.88	-	21.51	21.50	21.47	-
		Hi PR	279	280	282	-	323	324	326	-	369	371	372	-	419	420	422	-	473	474	476	-	530	531	533	-
		Lo PR	125	126	129	-	132	134	137	-	139	140	144	-	144	146	149	-	150	152	155	-	157	158	162	-
	1500	MBh	46.4	47.0	48.4	-	46.0	46.6	48.0	-	44.8	45.4	46.8	-	42.7	43.4	44.7	-	40.2	40.9	42.2	-	37.9	38.6	39.9	-
		S/T	0.68	0.60	0.46	-	0.68	0.60	0.47	-	0.71	0.63	0.49	-	1.00	0.65	0.51	-	1.00	0.67	0.53	-	1.00	0.72	0.59	-
		ΔT	18.72	16.88	13.46	-	18.67	16.83	13.41	-	18.93	17.09	13.67	-	18.65	16.82	13.39	-	18.40	16.57	13.15	-	19.55	17.72	14.30	-
		kW	3.04	3.04	3.03	-	3.41	3.41	3.41	-	3.83	3.83	3.83	-	4.29	4.29	4.28	-	4.80	4.79	4.79	-	5.39	5.39	5.38	-
		Amps	11.40	11.39	11.36	-	13.04	13.03	13.00	-	14.86	14.85	14.82	-	16.84	16.83	16.80	-	19.05	19.03	19.01	-	21.64	21.62	21.60	-
		Hi PR	282	283	285	-	326	328	330	-	373	374	376	-	422	424	426	-	476	477	479	-	533	535	537	-
		Lo PR	127	129	132	-	135	136	139	-	141	143	146	-	147	148	152	-	152	154	157	-	159	161	164	-
	1700	MBh	47.4	48.1	49.4	-	47.0	47.7	49.0	-	45.8	46.5	47.8	-	43.8	44.4	45.8	-	41.2	41.9	43.3	-	38.9	39.6	41.0	-
		S/T	0.72	0.64	0.50	-	0.72	0.65	0.51	-	1.00	0.67	0.53	-	1.00	0.69	0.55	-	1.00	0.71	0.58	-	1.00	1.00	0.63	-
		ΔT	17.46	15.63	12.21	-	17.41	15.58	12.16	-	17.67	15.84	12.41	-	17.39	15.56	12.14	-	17.15	15.32	11.89	-	18.30	16.46	13.04	-
		kW	3.06	3.06	3.05	-	3.44	3.43	3.43	-	3.86	3.85	3.85	-	4.31	4.31	4.30	-	4.82	4.82	4.81	-	5.41	5.41	5.40	-
		Amps	11.50	11.49	11.46	-	13.13	13.12	13.09	-	14.96	14.95	14.92	-	16.94	16.92	16.89	-	19.14	19.13	19.10	-	21.73	21.72	21.69	-
		Hi PR	285	287	289	-	330	331	333	-	376	377	379	-	426	427	429	-	479	481	483	-	537	538	540	-
		Lo PR	130	131	135	-	138	139	142	-	144	146	149	-	150	151	155	-	155	157	160	-	162	164	167	-
75	1400	MBh	45.6	46.3	47.6	49.7	45.2	45.8	47.2	49.3	44.0	44.6	46.0	48.1	41.9	42.6	44.0	46.0	39.4	40.1	41.4	43.5	37.1	37.8	39.2	41.2
		S/T	0.71	0.64	0.50	0.4	0.72	0.64	0.51	0.4	1.00	0.67	0.53	0.4	1.00	0.69	0.55	0.4	1.00	0.71	0.57	0.4	1.00	1.00	0.63	0.5
		ΔT	24.34	22.51	19.09	15.5	24.29	22.46	19.04	15.5	24.55	22.72	19.30	15.7	24.28	22.44	19.02	15.5	24.03	22.20	18.77	15.2	25.18	23.35	19.92	16.4
		kW	3.01	3.01	3.00	3.0	3.38	3.38	3.37	3.4	3.80	3.80	3.79	3.8	4.26	4.26	4.25	4.3	4.77	4.76	4.76	4.8	5.36	5.36	5.35	5.4
		Amps	11.27	11.26	11.23	11.4	12.91	12.89	12.86	13.0	14.73	14.72	14.69	14.8	16.71	16.69	16.67	16.8	18.91	18.90	18.87	19.0	21.50	21.49	21.46	21.6
		Hi PR	279	280	282	287.2	323	324	326	331.3	370	371	373	377.6	419	421	423	427.4	473	474	476	481.1	530	532	534	538.4
		Lo PR	125	126	129	134.6	132	134	137	142.2	139	140	144	148.9	144	146	149	154.5	150	152	155	160.1	157	158	162	167.0
	1500	MBh	46.4	47.1	48.4	50.5	46.0	46.6	48.0	50.1	44.8	45.5	46.8	48.9	42.7	43.4	44.8	46.9	40.2	40.9	42.2	44.3	37.9	38.6	40.0	42.0
		S/T	0.81	0.73	0.59	0.4	1.00	0.74	0.60	0.5	1.00	0.76	0.62	0.5	1.00	0.78	0.64	0.5	1.00	0.80	0.67	0.5	1.00	1.00	0.72	0.6
		ΔT	22.75	20.92	17.49	13.9	22.70	20.87	17.44	13.9	22.96	21.12	17.70	14.2	22.68	20.85	17.42	13.9	22.44	20.60	17.18	13.6	23.58	21.75	18.33	14.8
		kW	3.04	3.03	3.03	3.1	3.41	3.41	3.40	3.4	3.83	3.83	3.82	3.9	4.29	4.28	4.28	4.3	4.79	4.79	4.78	4.8	5.39	5.39	5.38	5.4
		Amps	11.39	11.38	11.35	11.5	13.03	13.01	12.99	13.1	14.85	14.84	14.81	14.9	16.83	16.82	16.79	16.9	19.04	19.02	19.00	19.1	21.63	21.61	21.58	21.7
		Hi PR	282	284	286	290.5	327	328	330	334.7	373	374	376	380.9	423	424	426	430.7	476	478	480	484.5	534	535	537	541.8
		Lo PR	127	129	132	137.1	135	136	139	144.7	141	143	146	151.4	147	149	152	157.0	153	154	157	162.6	159	161	164	169.5
	1700	MBh	47.4	48.1	49.5	51.5	47.0	47.7	49.0	51.1	45.8	46.5	47.9	49.9	43.8	44.4	45.8	47.9	41.3	41.9	43.3	45.4	39.0	39.6	41.0	43.1
		S/T	0.85	0.77	0.63	0.5	1.00	0.78	0.64	0.5	1.00	0.80	0.66	0.5	1.00	0.82	0.68	0.5	1.00	1.00	0.71	0.6	1.00	1.00	0.76	0.6
		ΔT	21.49	19.66	16.24	12.7	21.44	19.61	16.19	12.6	21.70	19.87	16.44	12.9	21.43	19.59	16.17	12.6	21.18	19.35	15.92	12.4	22.33	20.49	17.07	13.5
		kW	3.06	3.06	3.05	3.1	3.43	3.43	3.43	3.5	3.85	3.85	3.84	3.9	4.31	4.31	4.30	4.3	4.82	4.81	4.81	4.8	5.41	5.41	5.40	5.4
		Amps	11.49	11.48	11.45	11.6	13.12	13.11	13.08	13.2	14.95	14.94	14.91	15.0	16.92	16.91	16.88	17.0	19.13	19.12	19.09	19.2	21.72	21.71	21.68	21.8
		Hi PR	286	287	289	293.7	330	331	333	337.9	376	377	379	384.1	426	427	429	433.9	480	481	483	487.6	537	538	540	545.0
		Lo PR	130	131	135	140.0	138	139	142	147.6	144	146	149	154.3	150	151	155	159.9	155	157	160	165.5	162	164	167	172.4

IDB = Entering Indoor Dry Bulb Temperature

High and low pressures are measured at the liquid and suction access fittings.

Shaded area reflects ACCA (TVA) conditions.

kW = total system power

Amps: Unit amps (comp.+ evaporator + condenser fan motors)

Expanded Cooling Data — APCH34831 (cont.)

			Outdoor Ambient Temperature																							
			65				75				85				95				105				115			
			Entering Indoor Wet Bulb Temperature																							
IDB	Airflow		59	63	67	71	59	63	67	71	59	63	67	71	59	63	67	71	59	63	67	71	59	63	67	71
80	1400	MBh	45.8	46.5	47.9	49.9	45.4	46.1	47.4	49.5	44.2	44.9	46.3	48.3	42.2	42.8	44.2	46.3	39.7	40.3	41.7	43.8	37.4	38.0	39.4	41.5
		S/T	1.00	0.76	0.63	0.5	1.00	0.77	0.63	0.5	1.00	0.80	0.66	0.5	1.00	1.00	0.68	0.5	1.00	1.00	0.70	0.6	1.00	1.00	0.75	0.6
		ΔT	28.40	26.57	23.15	19.6	28.35	26.52	23.10	19.5	28.61	26.78	23.35	19.8	28.33	26.50	23.08	19.5	28.09	26.26	22.83	19.3	29.24	27.40	23.98	20.4
		kW	3.01	3.01	3.00	3.0	3.39	3.38	3.38	3.4	3.81	3.80	3.80	3.8	4.26	4.26	4.25	4.3	4.77	4.77	4.76	4.8	5.36	5.36	5.35	5.4
		Amps	11.28	11.27	11.24	11.4	12.91	12.90	12.87	13.0	14.74	14.73	14.70	14.8	16.72	16.70	16.67	16.8	18.92	18.91	18.88	19.0	21.51	21.50	21.47	21.6
		Hi PR	280	281	283	287.7	324	325	327	331.9	370	371	373	378.1	420	421	423	427.9	474	475	477	481.6	531	532	534	538.9
		Lo PR	125	127	130	135.2	133	134	137	142.8	139	141	144	149.4	145	147	150	155.1	151	152	155	160.6	157	159	162	167.5
	1500	MBh	46.6	47.3	48.7	50.8	46.2	46.9	48.3	50.3	45.0	45.7	47.1	49.1	43.0	43.6	45.0	47.1	40.5	41.1	42.5	44.6	38.2	38.8	40.2	42.3
		S/T	1.00	0.86	0.72	0.6	1.00	0.86	0.73	0.6	1.00	0.89	0.75	0.6	1.00	1.00	0.77	0.6	1.00	1.00	0.79	0.6	1.00	1.00	0.84	0.7
		ΔT	26.81	24.98	21.55	18.0	26.76	24.93	21.50	18.0	27.02	25.18	21.76	18.2	26.74	24.91	21.48	17.9	26.50	24.66	21.24	17.7	27.64	25.81	22.39	18.8
		kW	3.04	3.04	3.03	3.1	3.41	3.41	3.40	3.4	3.83	3.83	3.82	3.9	4.29	4.29	4.28	4.3	4.80	4.79	4.79	4.8	5.39	5.39	5.38	5.4
		Amps	11.40	11.39	11.36	11.5	13.04	13.02	13.00	13.1	14.86	14.85	14.82	14.9	16.84	16.82	16.80	16.9	19.04	19.03	19.00	19.1	21.63	21.62	21.59	21.7
		Hi PR	283	284	286	291.0	327	328	330	335.2	373	375	377	381.4	423	424	426	431.3	477	478	480	485.0	534	535	537	542.3
		Lo PR	128	129	132	137.7	135	137	140	145.3	142	143	147	152.0	148	149	152	157.6	153	155	158	163.1	160	162	165	170.1
	1700	MBh	47.7	48.3	49.7	51.8	47.3	47.9	49.3	51.4	46.1	46.7	48.1	50.2	44.0	44.7	46.0	48.1	41.5	42.2	43.5	45.6	39.2	39.9	41.2	43.3
		S/T	1.00	0.90	0.76	0.6	1.00	0.90	0.77	0.6	1.00	1.00	0.79	0.6	1.00	1.00	0.81	0.7	1.00	1.00	0.83	0.7	1.00	1.00	1.00	0.7
		ΔT	25.55	23.72	20.30	16.7	25.50	23.67	20.25	16.7	25.76	23.93	20.50	17.0	25.48	23.65	20.23	16.7	25.24	23.41	19.98	16.4	26.39	24.55	21.13	17.6
		kW	3.06	3.06	3.05	3.1	3.44	3.43	3.43	3.5	3.86	3.85	3.85	3.9	4.31	4.31	4.30	4.3	4.82	4.82	4.81	4.8	5.41	5.41	5.40	5.4
		Amps	11.50	11.48	11.46	11.6	13.13	13.12	13.09	13.2	14.96	14.94	14.92	15.0	16.93	16.92	16.89	17.0	19.14	19.13	19.10	19.2	21.73	21.72	21.69	21.8
		Hi PR	286	287	289	294.2	330	332	334	338.4	377	378	380	384.6	426	428	430	434.5	480	481	483	488.2	537	539	541	545.5
		Lo PR	130	132	135	140.5	138	140	143	148.2	145	146	150	154.8	150	152	155	160.5	156	157	161	166.0	163	164	168	172.9
85	1400	MBh	46.6	47.3	48.6	50.7	46.2	46.9	48.2	50.3	45.0	45.7	47.0	49.1	43.0	43.6	45.0	47.1	40.4	41.1	42.5	44.5	38.1	38.8	40.2	42.2
		S/T	1.00	0.87	0.73	0.6	1.00	1.00	0.74	0.6	1.00	1.00	0.76	0.6	1.00	1.00	0.78	0.6	1.00	1.00	0.80	0.7	1.00	1.00	1.00	0.7
		ΔT	32.00	30.17	26.75	23.2	31.95	30.12	26.70	23.1	32.21	30.38	26.95	23.4	31.93	30.10	26.68	23.1	31.69	29.86	26.43	22.9	32.84	31.00	27.58	24.0
		kW	3.02	3.01	3.01	3.0	3.39	3.39	3.38	3.4	3.81	3.81	3.80	3.8	4.27	4.26	4.26	4.3	4.78	4.77	4.77	4.8	5.37	5.37	5.36	5.4
		Amps	11.31	11.30	11.27	11.4	12.95	12.93	12.90	13.0	14.77	14.76	14.73	14.9	16.75	16.73	16.71	16.8	18.95	18.94	18.91	19.0	21.54	21.53	21.50	21.6
		Hi PR	281	282	284	289.0	325	326	328	333.2	371	373	375	379.4	421	422	424	429.2	475	476	478	482.9	532	533	535	540.3
		Lo PR	127	129	132	137.0	135	136	139	144.6	141	143	146	151.3	147	148	152	157.0	152	154	157	162.5	159	161	164	169.4
	1500	MBh	47.4	48.1	49.4	51.5	47.0	47.7	49.0	51.1	45.8	46.5	47.8	49.9	43.8	44.4	45.8	47.9	41.2	41.9	43.3	45.3	38.9	39.6	41.0	43.1
		S/T	1.00	0.96	0.82	0.7	1.00	1.00	0.83	0.7	1.00	1.00	0.85	0.7	1.00	1.00	0.87	0.7	1.00	1.00	1.00	0.8	1.00	1.00	1.00	0.8
		ΔT	30.41	28.58	25.15	21.6	30.36	28.52	25.10	21.6	30.62	28.78	25.36	21.8	30.34	28.51	25.08	21.5	30.09	28.26	24.84	21.3	31.24	29.41	25.99	22.4
		kW	3.05	3.04	3.04	3.1	3.42	3.42	3.41	3.4	3.84	3.84	3.83	3.9	4.30	4.29	4.29	4.3	4.80	4.80	4.79	4.8	5.40	5.40	5.39	5.4
		Amps	11.43	11.42	11.39	11.5	13.07	13.05	13.03	13.2	14.89	14.88	14.85	15.0	16.87	16.86	16.83	17.0	19.08	19.06	19.04	19.2	21.67	21.65	21.62	21.7
		Hi PR	284	286	287	292.3	328	330	332	336.5	375	376	378	382.8	425	426	428	432.6	478	479	481	486.3	536	537	539	543.6
		Lo PR	129	131	134	139.5	137	139	142	147.2	144	145	148	153.8	149	151	154	159.5	155	156	160	165.0	162	163	167	171.9
	1700	MBh	48.5	49.1	50.5	52.6	48.0	48.7	50.1	52.1	46.8	47.5	48.9	51.0	44.8	45.4	46.8	48.9	42.3	42.9	44.3	46.4	40.0	40.6	42.0	44.1
		S/T	1.00	1.00	0.86	0.7	1.00	1.00	0.87	0.7	1.00	1.00	0.89	0.7	1.00	1.00	0.91	0.8	1.00	1.00	1.00	0.8	1.00	1.00	1.00	0.8
		ΔT	29.15	27.32	23.90	20.3	29.10	27.27	23.85	20.3	29.36	27.53	24.10	20.6	29.08	27.25	23.83	20.3	28.84	27.01	23.58	20.0	29.99	28.15	24.73	21.2
		kW	3.07	3.06	3.06	3.1	3.44	3.44	3.43	3.5	3.86	3.86	3.85	3.9	4.32	4.31	4.31	4.3	4.83	4.82	4.82	4.8	5.42	5.42	5.41	5.4
		Amps	11.53	11.52	11.49	11.6	13.16	13.15	13.12	13.2	14.99	14.98	14.95	15.1	16.96	16.95	16.92	17.0	19.17	19.16	19.13	19.3	21.76	21.75	21.72	21.8
		Hi PR	287	289	291	295.5	332	333	335	339.7	378	379	381	386.0	428	429	431	435.8	481	483	485	489.5	539	540	542	546.8
		Lo PR	132	134	137	142.4	140	142	145	150.0	147	148	151	156.7	152	154	157	162.3	158	159	163	167.9	165	166	169	174.8

IDB = Entering Indoor Dry Bulb Temperature

High and low pressures are measured at the liquid and suction access fittings.

Shaded area reflects AHRI (TVA) conditions.

kW = total system power

Amps: Unit amps (comp.+ evaporator + condenser fan motors)

Expanded Cooling Data — APCH36031 (100%)

			Outdoor Ambient Temperature																							
			65				75				85				95				105				115			
			Entering Indoor Wet Bulb Temperature																							
IDB	Airflow		59	63	67	71	59	63	67	71	59	63	67	71	59	63	67	71	59	63	67	71	59	63	67	71
70	1500	MBh	56.5	57.3	59.0	-	56.0	56.8	58.5	-	54.5	55.3	57.0	-	52.0	52.8	54.5	-	48.8	49.6	51.3	-	46.0	46.8	48.5	-
		S/T	0.52	0.45	0.32	-	0.53	0.46	0.33	-	0.55	0.48	0.35	-	0.57	0.50	0.37	-	0.59	0.52	0.39	-	1.00	0.57	0.44	-
		ΔT	21.74	19.82	16.23	-	21.68	19.76	16.18	-	21.95	20.03	16.45	-	21.66	19.74	16.16	-	21.41	19.49	15.90	-	22.61	20.69	17.10	-
		kW	3.70	3.70	3.69	-	4.18	4.18	4.17	-	4.72	4.71	4.70	-	5.29	5.29	5.28	-	5.94	5.93	5.93	-	6.70	6.69	6.68	-
		Amps	13.90	13.88	13.85	-	15.98	15.96	15.93	-	18.30	18.28	18.25	-	20.81	20.79	20.76	-	23.61	23.60	23.56	-	26.91	26.89	26.85	-
		Hi PR	273	274	276	-	316	317	319	-	362	363	365	-	411	412	414	-	463	464	466	-	520	521	523	-
		Lo PR	116	117	120	-	123	124	127	-	129	130	133	-	134	136	139	-	139	141	144	-	146	147	150	-
	1650	MBh	57.7	58.5	60.2	-	57.2	58.0	59.7	-	55.7	56.5	58.2	-	53.2	54.0	55.7	-	50.0	50.8	52.5	-	47.2	48.0	49.7	-
		S/T	0.64	0.57	0.44	-	0.65	0.57	0.44	-	0.67	0.60	0.47	-	0.69	0.62	0.49	-	0.71	0.64	0.51	-	1.00	0.69	0.56	-
		ΔT	19.60	17.68	14.09	-	19.55	17.63	14.04	-	19.82	17.90	14.31	-	19.53	17.61	14.02	-	19.27	17.35	13.77	-	20.47	18.55	14.97	-
		kW	3.75	3.75	3.74	-	4.23	4.22	4.22	-	4.76	4.76	4.75	-	5.34	5.33	5.33	-	5.98	5.98	5.97	-	6.74	6.74	6.73	-
		Amps	14.10	14.08	14.05	-	16.18	16.16	16.12	-	18.50	18.48	18.44	-	21.01	20.99	20.96	-	23.81	23.80	23.76	-	27.10	27.09	27.05	-
		Hi PR	277	278	280	-	320	322	323	-	366	367	369	-	415	416	418	-	467	469	471	-	524	525	527	-
		Lo PR	118	120	123	-	126	127	130	-	132	133	136	-	137	138	141	-	142	144	147	-	149	150	153	-
	1800	MBh	59.4	60.2	61.9	-	58.8	59.6	61.3	-	57.4	58.2	59.9	-	54.8	55.6	57.3	-	51.7	52.5	54.2	-	48.8	49.6	51.3	-
		S/T	0.68	0.61	0.48	-	0.69	0.62	0.49	-	0.71	0.64	0.51	-	0.73	0.66	0.53	-	1.00	0.68	0.55	-	1.00	0.73	0.60	-
		ΔT	18.01	16.09	12.51	-	17.96	16.04	12.45	-	18.23	16.31	12.72	-	17.94	16.02	12.43	-	17.68	15.76	12.18	-	18.88	16.96	13.38	-
		kW	3.78	3.78	3.77	-	4.26	4.26	4.25	-	4.79	4.79	4.78	-	5.37	5.37	5.36	-	6.02	6.01	6.01	-	6.77	6.77	6.76	-
		Amps	14.24	14.23	14.19	-	16.32	16.31	16.27	-	18.64	18.63	18.59	-	21.15	21.14	21.10	-	23.96	23.94	23.91	-	27.25	27.23	27.20	-
		Hi PR	281	282	284	-	324	325	327	-	370	371	373	-	419	420	422	-	471	472	474	-	528	529	531	-
		Lo PR	122	123	126	-	129	130	133	-	135	137	140	-	140	142	145	-	146	147	150	-	152	153	156	-
75	1500	MBh	56.6	57.4	59.1	61.7	56.0	56.9	58.6	61.2	54.6	55.4	57.1	59.7	52.0	52.8	54.5	57.1	48.9	49.7	51.4	54.0	46.0	46.8	48.5	51.1
		S/T	0.65	0.58	0.44	0.3	0.65	0.58	0.45	0.3	0.68	0.61	0.47	0.3	1.00	0.62	0.49	0.4	1.00	0.65	0.51	0.4	1.00	0.69	0.56	0.4
		ΔT	25.96	24.04	20.45	16.7	25.90	23.98	20.40	16.7	26.17	24.25	20.67	17.0	25.88	23.96	20.38	16.7	25.63	23.71	20.12	16.4	26.83	24.91	21.33	17.6
		kW	3.70	3.70	3.69	3.7	4.18	4.17	4.17	4.2	4.71	4.71	4.70	4.7	5.29	5.29	5.28	5.3	5.94	5.93	5.92	6.0	6.69	6.69	6.68	6.7
		Amps	13.89	13.87	13.83	14.0	15.96	15.95	15.91	16.1	18.28	18.27	18.23	18.4	20.80	20.78	20.74	20.9	23.60	23.58	23.55	23.7	26.89	26.88	26.84	27.0
		Hi PR	273	274	276	281.1	316	318	320	324.4	362	363	365	369.8	411	412	414	418.7	464	465	467	471.4	520	521	523	527.7
		Lo PR	116	117	120	125.0	123	124	127	132.1	129	130	133	138.3	134	136	139	143.6	139	141	144	148.8	146	147	150	155.2
	1650	MBh	57.8	58.6	60.3	62.9	57.2	58.0	59.8	62.4	55.8	56.6	58.3	60.9	53.2	54.0	55.7	58.3	50.1	50.9	52.6	55.2	47.2	48.0	49.7	52.3
		S/T	0.76	0.69	0.56	0.4	0.77	0.70	0.57	0.4	0.79	0.72	0.59	0.5	1.00	0.74	0.61	0.5	1.00	0.76	0.63	0.5	1.00	0.81	0.68	0.5
		ΔT	23.82	21.90	18.32	14.6	23.77	21.85	18.26	14.5	24.04	22.12	18.53	14.8	23.75	21.83	18.24	14.5	23.49	21.57	17.99	14.3	24.69	22.77	19.19	15.5
		kW	3.75	3.74	3.73	3.8	4.22	4.22	4.21	4.2	4.76	4.75	4.75	4.8	5.34	5.33	5.32	5.4	5.98	5.98	5.97	6.0	6.74	6.73	6.73	6.8
		Amps	14.08	14.07	14.03	14.2	16.16	16.15	16.11	16.3	18.48	18.47	18.43	18.6	20.99	20.98	20.94	21.1	23.80	23.78	23.75	23.9	27.09	27.07	27.04	27.2
		Hi PR	277	278	280	285.2	321	322	324	328.5	366	367	369	373.9	415	416	418	422.8	468	469	471	475.5	524	525	527	531.8
		Lo PR	118	120	123	127.9	126	127	130	135.0	132	133	136	141.2	137	139	141	146.5	142	144	147	151.6	149	150	153	158.1
	1800	MBh	59.4	60.2	61.9	64.5	58.9	59.7	61.4	64.0	57.4	58.2	59.9	62.5	54.8	55.6	57.3	59.9	51.7	52.5	54.2	56.8	48.8	49.6	51.4	54.0
		S/T	0.81	0.73	0.60	0.5	0.81	0.74	0.61	0.5	1.00	0.76	0.63	0.5	1.00	0.78	0.65	0.5	1.00	0.80	0.67	0.5	1.00	0.85	0.72	0.6
		ΔT	22.23	20.31	16.73	13.0	22.18	20.26	16.68	13.0	22.45	20.53	16.95	13.2	22.16	20.24	16.66	12.9	21.90	19.98	16.40	12.7	23.11	21.19	17.60	13.9
		kW	3.78	3.78	3.77	3.8	4.26	4.25	4.25	4.3	4.79	4.79	4.78	4.8	5.37	5.37	5.36	5.4	6.01	6.01	6.00	6.0	6.77	6.77	6.76	6.8
		Amps	14.23	14.21	14.18	14.3	16.31	16.29	16.26	16.4	18.63	18.61	18.58	18.7	21.14	21.12	21.09	21.2	23.95	23.93	23.89	24.1	27.24	27.22	27.19	27.3
		Hi PR	281	282	284	289.0	324	326	328	332.4	370	371	373	377.8	419	420	422	426.7	471	473	475	479.4	528	529	531	535.7
		Lo PR	122	123	126	131.3	129	130	133	138.4	135	137	140	144.6	140	142	145	149.8	146	147	150	155.0	152	154	156	161.5

IDB = Entering Indoor Dry Bulb Temperature

High and low pressures are measured at the liquid and suction access fittings.

Shaded area reflects ACCA (TVA) conditions.

kW = total system power

Amps: Unit amps (comp.+ evaporator + condenser fan motors)

Expanded Cooling Data — APCH36031 (100%) (cont.)

			Outdoor Ambient Temperature																							
			65				75				85				95				105				115			
			Entering Indoor Wet Bulb Temperature																							
IDB	Airflow		59	63	67	71	59	63	67	71	59	63	67	71	59	63	67	71	59	63	67	71	59	63	67	71
80	1500	MBh	56.9	57.7	59.4	62.0	56.3	57.1	58.8	61.4	54.9	55.7	57.4	60.0	52.3	53.1	54.8	57.4	49.2	50.0	51.7	54.3	46.3	47.1	48.8	51.4
		S/T	0.77	0.70	0.57	0.4	1.00	0.70	0.57	0.4	1.00	0.73	0.60	0.5	1.00	0.74	0.61	0.5	1.00	0.77	0.64	0.5	1.00	1.00	0.69	0.5
		ΔT	30.21	28.29	24.70	21.0	30.15	28.23	24.65	20.9	30.42	28.50	24.92	21.2	30.13	28.21	24.63	20.9	29.88	27.96	24.37	20.7	31.08	29.16	25.58	21.9
		kW	3.70	3.70	3.69	3.7	4.18	4.18	4.17	4.2	4.71	4.71	4.70	4.7	5.29	5.29	5.28	5.3	5.94	5.93	5.93	6.0	6.69	6.69	6.68	6.7
		Amps	13.90	13.88	13.84	14.0	15.97	15.96	15.92	16.1	18.30	18.28	18.24	18.4	20.81	20.79	20.75	20.9	23.61	23.59	23.56	23.7	26.90	26.89	26.85	27.0
		Hi PR	274	275	277	281.6	317	318	320	324.9	362	364	366	370.3	411	413	414	419.2	464	465	467	471.9	520	521	523	528.2
		Lo PR	116	118	121	125.5	123	125	128	132.6	129	131	134	138.9	135	136	139	144.1	140	141	144	149.3	146	148	151	155.7
	1650	MBh	58.1	58.9	60.6	63.2	57.5	58.3	60.0	62.6	56.1	56.9	58.6	61.2	53.5	54.3	56.0	58.6	50.4	51.2	52.9	55.5	47.5	48.3	50.0	52.6
		S/T	0.89	0.81	0.68	0.5	1.00	0.82	0.69	0.6	1.00	0.84	0.71	0.6	1.00	0.86	0.73	0.6	1.00	0.88	0.75	0.6	1.00	1.00	0.80	0.7
		ΔT	28.07	26.15	22.57	18.9	28.02	26.10	22.51	18.8	28.29	26.37	22.78	19.1	28.00	26.08	22.49	18.8	27.74	25.82	22.24	18.5	28.94	27.02	23.44	19.7
		kW	3.75	3.75	3.74	3.8	4.23	4.22	4.22	4.3	4.76	4.76	4.75	4.8	5.34	5.33	5.33	5.4	5.98	5.98	5.97	6.0	6.74	6.74	6.73	6.8
		Amps	14.10	14.08	14.04	14.2	16.17	16.16	16.12	16.3	18.49	18.48	18.44	18.6	21.00	20.99	20.95	21.1	23.81	23.79	23.76	23.9	27.10	27.09	27.05	27.2
		Hi PR	278	279	281	285.7	321	322	324	329.0	367	368	370	374.4	415	417	419	423.3	468	469	471	476.0	524	526	528	532.3
		Lo PR	119	120	123	128.4	126	128	131	135.5	132	134	137	141.7	138	139	142	147.0	143	144	147	152.1	149	151	154	158.6
	1800	MBh	59.7	60.5	62.2	64.8	59.2	60.0	61.7	64.3	57.7	58.5	60.2	62.8	55.1	55.9	57.6	60.2	52.0	52.8	54.5	57.1	49.1	49.9	51.6	54.2
		S/T	0.93	0.85	0.72	0.6	1.00	0.86	0.73	0.6	1.00	0.88	0.75	0.6	1.00	0.90	0.77	0.6	1.00	1.00	0.79	0.7	1.00	1.00	0.84	0.7
		ΔT	26.48	24.56	20.98	17.3	26.43	24.51	20.93	17.2	26.70	24.78	21.19	17.5	26.41	24.49	20.91	17.2	26.15	24.23	20.65	16.9	27.36	25.44	21.85	18.1
		kW	3.78	3.78	3.77	3.8	4.26	4.26	4.25	4.3	4.79	4.79	4.78	4.8	5.37	5.37	5.36	5.4	6.02	6.01	6.01	6.0	6.77	6.77	6.76	6.8
		Amps	14.24	14.23	14.19	14.3	16.32	16.30	16.27	16.4	18.64	18.62	18.59	18.7	21.15	21.14	21.10	21.3	23.96	23.94	23.91	24.1	27.25	27.23	27.20	27.4
		Hi PR	282	283	285	289.5	325	326	328	332.9	370	372	374	378.3	419	420	422	427.2	472	473	475	479.9	528	529	531	536.2
		Lo PR	122	124	127	131.8	129	131	134	138.9	136	137	140	145.1	141	142	145	150.4	146	148	151	155.5	153	154	157	162.0
85	1500	MBh	57.8	58.6	60.3	62.9	57.3	58.1	59.8	62.4	55.8	56.6	58.3	60.9	53.3	54.1	55.8	58.4	50.1	50.9	52.6	55.2	47.3	48.1	49.8	52.4
		S/T	1.00	0.79	0.66	0.5	1.00	0.80	0.67	0.5	1.00	0.82	0.69	0.6	1.00	1.00	0.71	0.6	1.00	1.00	0.73	0.6	1.00	1.00	0.78	0.6
		ΔT	33.98	32.06	28.47	24.8	33.92	32.00	28.42	24.7	34.19	32.27	28.69	25.0	33.90	31.98	28.40	24.7	33.65	31.73	28.14	24.4	34.85	32.93	29.34	25.6
		kW	3.71	3.71	3.70	3.7	4.19	4.19	4.18	4.2	4.72	4.72	4.71	4.7	5.30	5.30	5.29	5.3	5.95	5.94	5.93	6.0	6.70	6.70	6.69	6.7
		Amps	13.94	13.92	13.88	14.0	16.01	16.00	15.96	16.1	18.33	18.32	18.28	18.4	20.85	20.83	20.79	21.0	23.65	23.63	23.60	23.8	26.94	26.93	26.89	27.0
		Hi PR	275	276	278	282.9	318	319	321	326.2	364	365	367	371.6	413	414	416	420.5	465	467	468	473.2	522	523	525	529.5
		Lo PR	118	119	122	127.3	125	126	129	134.4	131	133	136	140.6	136	138	141	145.9	142	143	146	151.0	148	150	153	157.5
	1650	MBh	59.0	59.8	61.5	64.1	58.5	59.3	61.0	63.6	57.0	57.8	59.5	62.1	54.5	55.3	57.0	59.6	51.3	52.1	53.8	56.4	48.5	49.3	51.0	53.6
		S/T	1.00	0.91	0.78	0.6	1.00	0.92	0.78	0.6	1.00	1.00	0.81	0.7	1.00	1.00	0.83	0.7	1.00	1.00	0.85	0.7	1.00	1.00	0.90	0.8
		ΔT	31.84	29.92	26.34	22.6	31.79	29.87	26.28	22.6	32.06	30.14	26.55	22.8	31.77	29.85	26.26	22.5	31.51	29.59	26.01	22.3	32.71	30.79	27.21	23.5
		kW	3.76	3.75	3.75	3.8	4.24	4.23	4.22	4.3	4.77	4.77	4.76	4.8	5.35	5.34	5.34	5.4	5.99	5.99	5.98	6.0	6.75	6.75	6.74	6.8
		Amps	14.13	14.12	14.08	14.2	16.21	16.20	16.16	16.3	18.53	18.52	18.48	18.6	21.04	21.03	20.99	21.2	23.85	23.83	23.80	24.0	27.14	27.12	27.09	27.2
		Hi PR	279	280	282	287.0	322	324	326	330.3	368	369	371	375.7	417	418	420	424.6	469	471	473	477.3	526	527	529	533.6
		Lo PR	121	122	125	130.1	128	129	132	137.2	134	136	138	143.5	139	141	144	148.7	145	146	149	153.9	151	152	155	160.4
	1800	MBh	60.6	61.4	63.1	65.7	60.1	60.9	62.6	65.2	58.6	59.4	61.1	63.7	56.1	56.9	58.6	61.2	53.0	53.8	55.5	58.1	50.1	50.9	52.6	55.2
		S/T	1.00	0.95	0.82	0.7	1.00	0.96	0.83	0.7	1.00	1.00	0.85	0.7	1.00	1.00	0.87	0.7	1.00	1.00	0.89	0.8	1.00	1.00	1.00	0.8
		ΔT	30.25	28.33	24.75	21.0	30.20	28.28	24.69	21.0	30.47	28.55	24.96	21.3	30.18	28.26	24.67	21.0	29.92	28.00	24.42	20.7	31.12	29.20	25.62	21.9
		kW	3.79	3.79	3.78	3.8	4.27	4.27	4.26	4.3	4.80	4.80	4.79	4.8	5.38	5.38	5.37	5.4	6.03	6.02	6.01	6.1	6.78	6.78	6.77	6.8
		Amps	14.28	14.27	14.23	14.4	16.36	16.34	16.31	16.5	18.68	18.66	18.63	18.8	21.19	21.17	21.14	21.3	24.00	23.98	23.94	24.1	27.29	27.27	27.24	27.4
		Hi PR	283	284	286	290.8	326	327	329	334.2	372	373	375	379.6	421	422	424	428.5	473	474	476	481.2	530	531	533	537.5
		Lo PR	124	126	129	133.5	131	133	136	140.6	137	139	142	146.8	143	144	147	152.1	148	149	152	157.3	154	156	159	163.7

IDB = Entering Indoor Dry Bulb Temperature

High and low pressures are measured at the liquid and suction access fittings.

Shaded area reflects AHRI (TVA) conditions.

kW = total system power

Amps: Unit amps (comp.+ evaporator + condenser fan motors)

Expanded Cooling Data — APCH36031 (70%)

			Outdoor Ambient Temperature																							
			65				75				85				95				105				115			
			Entering Indoor Wet Bulb Temperature																							
IDB	Airflow		59	63	67	71	59	63	67	71	59	63	67	71	59	63	67	71	59	63	67	71	59	63	67	71
70	1500	MBh	40.7	41.3	42.5	-	40.3	40.9	42.1	-	39.2	39.8	41.0	-	37.4	38.0	39.2	-	35.2	35.7	37.0	-	33.1	33.7	34.9	-
		S/T	0.55	0.47	0.34	-	0.55	0.48	0.34	-	0.58	0.50	0.37	-	0.60	0.52	0.39	-	1.00	0.54	0.41	-	1.00	0.60	0.46	-
		ΔT	20.83	18.98	15.52	-	20.78	18.93	15.47	-	21.04	19.19	15.73	-	20.76	18.91	15.45	-	20.52	18.66	15.20	-	21.68	19.82	16.36	-
		kW	2.33	2.33	2.32	-	2.63	2.63	2.62	-	2.97	2.97	2.96	-	3.33	3.33	3.32	-	3.74	3.73	3.73	-	4.21	4.21	4.21	-
		Amps	8.75	8.74	8.72	-	10.06	10.05	10.03	-	11.52	11.51	11.49	-	13.10	13.09	13.06	-	14.86	14.85	14.83	-	16.93	16.92	16.90	-
		Hi PR	261	262	264	-	303	304	306	-	346	347	349	-	393	394	396	-	443	444	446	-	497	498	500	-
		Lo PR	119	120	124	-	126	128	131	-	133	134	137	-	138	140	143	-	143	145	148	-	150	152	155	-
	1650	MBh	41.5	42.1	43.3	-	41.1	41.7	42.9	-	40.1	40.6	41.9	-	38.2	38.8	40.0	-	36.0	36.6	37.8	-	33.9	34.5	35.7	-
		S/T	0.66	0.58	0.45	-	0.66	0.59	0.45	-	0.69	0.61	0.48	-	0.71	0.63	0.50	-	1.00	0.65	0.52	-	1.00	0.71	0.57	-
		ΔT	18.91	17.06	13.60	-	18.86	17.01	13.55	-	19.12	17.27	13.81	-	18.84	16.99	13.53	-	18.60	16.74	13.28	-	19.76	17.90	14.44	-
		kW	2.36	2.36	2.35	-	2.66	2.66	2.65	-	2.99	2.99	2.99	-	3.36	3.36	3.35	-	3.76	3.76	3.76	-	4.24	4.24	4.23	-
		Amps	8.87	8.86	8.83	-	10.17	10.16	10.14	-	11.63	11.62	11.60	-	13.21	13.20	13.18	-	14.98	14.97	14.95	-	17.05	17.04	17.02	-
		Hi PR	265	266	268	-	306	307	309	-	350	351	353	-	396	398	399	-	447	448	450	-	501	502	504	-
		Lo PR	122	123	126	-	129	131	134	-	135	137	140	-	141	142	145	-	146	148	151	-	153	154	157	-
	1800	MBh	42.9	43.5	44.7	-	42.5	43.1	44.3	-	41.5	42.0	43.3	-	39.6	40.2	41.4	-	37.4	37.9	39.2	-	35.3	35.9	37.1	-
		S/T	0.70	0.63	0.49	-	0.71	0.63	0.50	-	0.73	0.66	0.52	-	1.00	0.68	0.54	-	1.00	0.70	0.57	-	1.00	0.75	0.62	-
		ΔT	17.17	15.32	11.86	-	17.12	15.27	11.81	-	17.38	15.53	12.07	-	17.10	15.25	11.79	-	16.85	15.00	11.54	-	18.01	16.16	12.70	-
		kW	2.38	2.38	2.38	-	2.68	2.68	2.68	-	3.02	3.02	3.01	-	3.38	3.38	3.37	-	3.79	3.79	3.78	-	4.26	4.26	4.26	-
		Amps	8.97	8.96	8.94	-	10.28	10.27	10.25	-	11.74	11.73	11.71	-	13.32	13.31	13.29	-	15.08	15.07	15.05	-	17.15	17.14	17.12	-
		Hi PR	269	270	272	-	311	312	314	-	354	355	357	-	401	402	404	-	451	452	454	-	505	506	508	-
		Lo PR	126	127	130	-	133	135	138	-	140	141	144	-	145	146	149	-	150	152	155	-	157	158	161	-
75	1500	MBh	40.7	41.3	42.5	44.4	40.3	40.9	42.1	44.0	39.3	39.8	41.1	42.9	37.4	38.0	39.2	41.1	35.2	35.8	37.0	38.9	33.1	33.7	34.9	36.8
		S/T	0.68	0.60	0.47	0.3	0.68	0.61	0.47	0.3	0.71	0.63	0.50	0.4	1.00	0.65	0.52	0.4	1.00	0.67	0.54	0.4	1.00	0.72	0.59	0.4
		ΔT	24.91	23.05	19.60	16.0	24.86	23.00	19.54	16.0	25.12	23.26	19.80	16.2	24.84	22.98	19.53	15.9	24.59	22.74	19.28	15.7	25.75	23.90	20.44	16.9
		kW	2.33	2.33	2.32	2.3	2.63	2.63	2.62	2.6	2.97	2.96	2.96	3.0	3.33	3.33	3.32	3.3	3.74	3.73	3.73	3.8	4.21	4.21	4.20	4.2
		Amps	8.74	8.73	8.71	8.8	10.05	10.04	10.02	10.1	11.51	11.50	11.48	11.6	13.09	13.08	13.06	13.2	14.85	14.84	14.82	14.9	16.92	16.91	16.89	17.0
		Hi PR	261	263	264	268.9	303	304	306	310.4	346	347	349	353.8	393	394	396	400.5	443	445	446	450.9	497	498	500	504.7
		Lo PR	119	121	124	128.7	126	128	131	136.0	133	134	137	142.4	138	140	143	147.8	143	145	148	153.1	150	152	155	159.7
	1650	MBh	41.5	42.1	43.3	45.2	41.2	41.7	43.0	44.8	40.1	40.7	41.9	43.8	38.2	38.8	40.1	41.9	36.0	36.6	37.8	39.7	33.9	34.5	35.7	37.6
		S/T	0.79	0.71	0.58	0.4	0.79	0.72	0.58	0.4	1.00	0.74	0.61	0.5	1.00	0.76	0.63	0.5	1.00	0.78	0.65	0.5	1.00	0.83	0.70	0.6
		ΔT	22.99	21.13	17.67	14.1	22.94	21.08	17.62	14.0	23.20	21.34	17.88	14.3	22.92	21.06	17.61	14.0	22.67	20.82	17.36	13.8	23.83	21.98	18.52	14.9
		kW	2.36	2.35	2.35	2.4	2.66	2.65	2.65	2.7	2.99	2.99	2.99	3.0	3.36	3.35	3.35	3.4	3.76	3.76	3.75	3.8	4.24	4.24	4.23	4.3
		Amps	8.86	8.85	8.83	8.9	10.17	10.16	10.13	10.2	11.63	11.62	11.59	11.7	13.21	13.19	13.17	13.3	14.97	14.96	14.94	15.0	17.04	17.03	17.01	17.1
		Hi PR	265	266	268	272.6	306	308	309	314.1	350	351	353	357.5	397	398	400	404.2	447	448	450	454.6	501	502	504	508.4
		Lo PR	122	123	126	131.5	129	131	134	138.8	136	137	140	145.2	141	142	145	150.6	146	148	151	155.9	153	154	157	162.5
	1800	MBh	42.9	43.5	44.7	46.6	42.5	43.1	44.3	46.2	41.5	42.1	43.3	45.1	39.6	40.2	41.4	43.3	37.4	38.0	39.2	41.1	35.3	35.9	37.1	39.0
		S/T	0.83	0.75	0.62	0.5	1.00	0.76	0.63	0.5	1.00	0.79	0.65	0.5	1.00	0.80	0.67	0.5	1.00	0.83	0.69	0.6	1.00	1.00	0.74	0.6
		ΔT	21.24	19.39	15.93	12.3	21.19	19.34	15.88	12.3	21.45	19.60	16.14	12.6	21.17	19.32	15.86	12.3	20.93	19.07	15.62	12.0	22.09	20.23	16.78	13.2
		kW	2.38	2.38	2.37	2.4	2.68	2.68	2.67	2.7	3.02	3.01	3.01	3.0	3.38	3.38	3.37	3.4	3.79	3.78	3.78	3.8	4.26	4.26	4.25	4.3
		Amps	8.96	8.95	8.93	9.0	10.27	10.26	10.24	10.3	11.73	11.72	11.70	11.8	13.31	13.30	13.28	13.4	15.07	15.06	15.04	15.1	17.14	17.13	17.11	17.2
		Hi PR	269	270	272	276.9	311	312	314	318.3	354	355	357	361.7	401	402	404	408.5	451	452	454	458.9	505	506	508	512.7
		Lo PR	126	127	130	135.5	133	135	138	142.8	140	141	144	149.2	145	146	150	154.6	150	152	155	159.9	157	158	161	166.6

IDB = Entering Indoor Dry Bulb Temperature

High and low pressures are measured at the liquid and suction access fittings.

Shaded area reflects ACCA (TVA) conditions.

kW = total system power

Amps: Unit amps (comp.+ evaporator + condenser fan motors)

Expanded Cooling Data — APCH36031 (70%) (cont.)

			Outdoor Ambient Temperature																							
			65				75				85				95				105				115			
			Entering Indoor Wet Bulb Temperature																							
IDB	Airflow		59	63	67	71	59	63	67	71	59	63	67	71	59	63	67	71	59	63	67	71	59	63	67	71
80	1500	MBh	40.9	41.5	42.7	44.6	40.6	41.1	42.4	44.2	39.5	40.1	41.3	43.2	37.6	38.2	39.4	41.3	35.4	36.0	37.2	39.1	33.3	33.9	35.1	37.0
		S/T	0.80	0.72	0.59	0.4	1.00	0.73	0.60	0.5	1.00	0.75	0.62	0.5	1.00	0.77	0.64	0.5	1.00	1.00	0.66	0.5	1.00	1.00	0.71	0.6
		ΔT	29.01	27.16	23.70	20.1	28.96	27.10	23.65	20.1	29.22	27.37	23.91	20.3	28.94	27.09	23.63	20.0	28.69	26.84	23.38	19.8	29.85	28.00	24.54	21.0
		kW	2.33	2.33	2.32	2.3	2.63	2.63	2.62	2.6	2.97	2.97	2.96	3.0	3.33	3.33	3.32	3.3	3.74	3.73	3.73	3.8	4.21	4.21	4.21	4.2
		Amps	8.75	8.74	8.72	8.8	10.06	10.05	10.02	10.1	11.52	11.51	11.48	11.6	13.10	13.09	13.06	13.2	14.86	14.85	14.83	14.9	16.93	16.92	16.90	17.0
		Hi PR	262	263	265	269.4	303	304	306	310.9	347	348	350	354.3	393	395	396	401.0	444	445	447	451.4	498	499	501	505.2
		Lo PR	120	121	124	129.2	127	128	131	136.5	133	135	138	142.9	139	140	143	148.3	144	145	149	153.6	151	152	155	160.3
	1650	MBh	41.7	42.3	43.5	45.4	41.4	42.0	43.2	45.0	40.3	40.9	42.1	44.0	38.5	39.0	40.3	42.1	36.2	36.8	38.0	39.9	34.2	34.7	36.0	37.8
		S/T	0.91	0.83	0.70	0.6	1.00	0.84	0.71	0.6	1.00	0.86	0.73	0.6	1.00	0.88	0.75	0.6	1.00	1.00	0.77	0.6	1.00	1.00	0.82	0.7
		ΔT	27.09	25.24	21.78	18.2	27.04	25.18	21.73	18.1	27.30	25.44	21.99	18.4	27.02	25.17	21.71	18.1	26.77	24.92	21.46	17.9	27.93	26.08	22.62	19.0
		kW	2.36	2.36	2.35	2.4	2.66	2.66	2.65	2.7	2.99	2.99	2.99	3.0	3.36	3.36	3.35	3.4	3.76	3.76	3.76	3.8	4.24	4.24	4.23	4.3
		Amps	8.87	8.86	8.83	8.9	10.17	10.16	10.14	10.2	11.63	11.62	11.60	11.7	13.21	13.20	13.18	13.3	14.98	14.97	14.94	15.0	17.05	17.04	17.01	17.1
		Hi PR	266	267	269	273.1	307	308	310	314.5	350	352	353	357.9	397	398	400	404.7	448	449	451	455.1	501	502	504	508.9
		Lo PR	122	124	127	132.0	130	131	134	139.3	136	138	141	145.7	141	143	146	151.1	147	148	151	156.4	153	155	158	163.0
	1800	MBh	43.1	43.7	44.9	46.8	42.8	43.3	44.6	46.4	41.7	42.3	43.5	45.4	39.8	40.4	41.6	43.5	37.6	38.2	39.4	41.3	35.5	36.1	37.3	39.2
		S/T	1.00	0.88	0.74	0.6	1.00	0.88	0.75	0.6	1.00	0.91	0.78	0.6	1.00	1.00	0.79	0.7	1.00	1.00	0.82	0.7	1.00	1.00	0.87	0.7
		ΔT	25.35	23.49	20.03	16.5	25.30	23.44	19.98	16.4	25.56	23.70	20.24	16.7	25.28	23.42	19.96	16.4	25.03	23.18	19.72	16.1	26.19	24.34	20.88	17.3
		kW	2.38	2.38	2.37	2.4	2.68	2.68	2.68	2.7	3.02	3.02	3.01	3.0	3.38	3.38	3.37	3.4	3.79	3.79	3.78	3.8	4.26	4.26	4.26	4.3
		Amps	8.97	8.96	8.94	9.0	10.28	10.27	10.25	10.3	11.74	11.73	11.70	11.8	13.32	13.31	13.28	13.4	15.08	15.07	15.05	15.1	17.15	17.14	17.12	17.2
		Hi PR	270	271	273	277.4	311	312	314	318.8	355	356	358	362.2	401	403	404	409.0	452	453	455	459.4	506	507	509	513.2
		Lo PR	126	128	131	136.1	134	135	138	143.4	140	142	145	149.8	146	147	150	155.2	151	152	155	160.5	157	159	162	167.1
85	1500	MBh	41.6	42.2	43.4	45.3	41.2	41.8	43.0	44.9	40.2	40.8	42.0	43.8	38.3	38.9	40.1	42.0	36.1	36.7	37.9	39.8	34.0	34.6	35.8	37.7
		S/T	1.00	0.82	0.69	0.5	1.00	0.83	0.70	0.6	1.00	1.00	0.72	0.6	1.00	1.00	0.74	0.6	1.00	1.00	0.76	0.6	1.00	1.00	0.81	0.7
		ΔT	32.65	30.79	27.33	23.7	32.59	30.74	27.28	23.7	32.86	31.00	27.54	24.0	32.58	30.72	27.26	23.7	32.33	30.48	27.02	23.4	33.49	31.64	28.18	24.6
		kW	2.34	2.33	2.33	2.4	2.64	2.64	2.63	2.7	2.97	2.97	2.97	3.0	3.34	3.33	3.33	3.4	3.74	3.74	3.73	3.8	4.22	4.22	4.21	4.2
		Amps	8.77	8.76	8.74	8.8	10.08	10.07	10.05	10.1	11.54	11.53	11.51	11.6	13.12	13.11	13.09	13.2	14.89	14.87	14.85	15.0	16.96	16.95	16.92	17.0
		Hi PR	263	264	266	270.7	305	306	308	312.1	348	349	351	355.5	395	396	398	402.3	445	446	448	452.7	499	500	502	506.4
		Lo PR	121	123	126	131.0	129	130	133	138.3	135	137	140	144.7	140	142	145	150.1	146	147	150	155.4	152	154	157	162.1
	1650	MBh	42.4	43.0	44.2	46.1	42.1	42.6	43.9	45.7	41.0	41.6	42.8	44.7	39.2	39.7	41.0	42.8	36.9	37.5	38.7	40.6	34.8	35.4	36.7	38.5
		S/T	1.00	0.93	0.80	0.7	1.00	0.94	0.81	0.7	1.00	1.00	0.83	0.7	1.00	1.00	0.85	0.7	1.00	1.00	0.87	0.7	1.00	1.00	1.00	0.8
		ΔT	30.73	28.87	25.41	21.8	30.67	28.82	25.36	21.8	30.93	29.08	25.62	22.0	30.66	28.80	25.34	21.8	30.41	28.56	25.10	21.5	31.57	29.72	26.26	22.7
		kW	2.36	2.36	2.36	2.4	2.66	2.66	2.66	2.7	3.00	3.00	2.99	3.0	3.36	3.36	3.36	3.4	3.77	3.77	3.76	3.8	4.25	4.24	4.24	4.3
		Amps	8.89	8.88	8.86	9.0	10.20	10.19	10.17	10.3	11.66	11.65	11.63	11.7	13.24	13.23	13.20	13.3	15.00	14.99	14.97	15.1	17.07	17.06	17.04	17.1
		Hi PR	267	268	270	274.3	308	309	311	315.8	352	353	355	359.2	398	400	401	405.9	449	450	452	456.3	503	504	506	510.1
		Lo PR	124	126	129	133.8	131	133	136	141.1	138	139	142	147.5	143	145	148	152.9	149	150	153	158.2	155	157	160	164.8
	1800	MBh	43.8	44.4	45.6	47.5	43.4	44.0	45.2	47.1	42.4	43.0	44.2	46.0	40.5	41.1	42.3	44.2	38.3	38.9	40.1	42.0	36.2	36.8	38.0	39.9
		S/T	1.00	0.98	0.84	0.7	1.00	1.00	0.85	0.7	1.00	1.00	0.88	0.7	1.00	1.00	0.89	0.8	1.00	1.00	0.92	0.8	1.00	1.00	1.00	0.8
		ΔT	28.98	27.13	23.67	20.1	28.93	27.08	23.62	20.0	29.19	27.34	23.88	20.3	28.91	27.06	23.60	20.0	28.67	26.81	23.35	19.8	29.83	27.97	24.51	20.9
		kW	2.39	2.39	2.38	2.4	2.69	2.69	2.68	2.7	3.02	3.02	3.02	3.0	3.39	3.39	3.38	3.4	3.79	3.79	3.79	3.8	4.27	4.27	4.26	4.3
		Amps	9.00	8.99	8.96	9.1	10.30	10.29	10.27	10.4	11.76	11.75	11.73	11.8	13.34	13.33	13.31	13.4	15.11	15.10	15.07	15.2	17.18	17.17	17.14	17.2
		Hi PR	271	272	274	278.6	312	314	315	320.1	356	357	359	363.5	403	404	406	410.2	453	454	456	460.6	507	508	510	514.4
		Lo PR	128	130	133	137.9	136	137	140	145.2	142	143	146	151.6	147	149	152	157.0	153	154	157	162.3	159	161	164	168.9

IDB = Entering Indoor Dry Bulb Temperature

High and low pressures are measured at the liquid and suction access fittings.

Shaded area reflects AHRI (TVA) conditions.

kW = total system power

Amps: Unit amps (comp.+ evaporator + condenser fan motors)

Model	Speed*	Volts		E.S.P. (In. of H2O)							
				0.10	0.20	0.30	0.40	0.50	0.60	0.70	0.80
APCH3 2431	T1	230	CFM	922	873	823	774	724	675	626	576
			Watts	74	85	96	107	118	129	140	151
	T2, T3	230	CFM	1,055	1,016	976	935	894	845	788	728
			Watts	131	142	153	164	174	185	196	206
	T4, T5	230	CFM	1,231	1,179	1,127	1,074	1,022	969	917	865
			Watts	168	180	193	205	210	230	243	255
APCH3 3031	T1	230	CFM	864	808	757	695	636	567	494	437
			Watts	72	82	91	103	107	115	123	131
	T2, T3	230	CFM	1,081	1,045	1,013	980	952	909	863	818
			Watts	149	161	172	182	195	202	213	220
	T4, T5	230	CFM	1,404	1,362	1,321	1,271	1,238	1,191	1,150	1,105
			Watts	235	246	257	272	284	289	300	309
APCH3 3631	T1	230	CFM	1,271	1,214	1,167	1,127	1,095	1,052	1,013	971
			Watts	168	177	188	200	214	224	235	249
	T2, T3	230	CFM	1,327	1,270	1,233	1,197	1,155	1,123	1,082	1,042
			Watts	185	196	211	224	236	250	261	275
	T4, T5	230	CFM	1,736	1,679	1,638	1,598	1,558	1,520	1,484	1,441
			Watts	356	372	382	395	408	422	433	442
APCH3 4231	T1	230	CFM	1,271	1,214	1,167	1,127	1,095	1,052	1,013	971
			Watts	168	177	188	200	214	224	235	249
	T2,T3	230	CFM	1,489	1,448	1,404	1,368	1,335	1,296	1,260	1,241
			Watts	248	262	272	287	301	310	1,723	333
	T4, T5	230	CFM	1,736	1,679	1,638	1,598	1,558	1,520	1,484	1,441
			Watts	356	372	382	395	408	422	433	442
APCH3 4831	T1	230	CFM	1,337	1,297	1,218	1,155	1,118	1,088	1,022	989
			Watts	179	190	203	210	225	243	249	268
	T2/T3	230	CFM	1,607	1,626	1,591	1,553	1,517	1,483	1,443	1,405
			Watts	366	364	377	392	405	419	429	439
	T4/T5	230	CFM	2,002	1,935	1,885	1,827	1,767	1,732	1,669	1,618
			Watts	498	521	516	534	551	567	571	574
APCH3 6031	T1	230	CFM	1,245	1,191	1,157	1,098	1,051	1,003	1,006	949
			Watts	156	165	177	187	198	209	218	230
	T2, T3	230	CFM	1,906	1,843	1,802	1,760	1,726	1,685	1,644	1,613
			Watts	453	463	474	480	489	501	509	524
	T4, T5	230	CFM	1,933	1,886	1,838	1,796	1,759	1,723	1,693	1,669
			Watts	491	499	506	519	527	534	539	550

* Speed set at T2 at factory.

Model and Heat Kit Usage	Circuit #1		Circuit #2		Single-Point Kit		Actual kW
	MCA[1]	MOP[2]	MCA[1]	MOP[2]	MCA[1]	MOP[2]	
APCH32431							
HKTPD051	24.7	25	-	-	45.45	50	4.75
HKTPD081	36.5	40	-	-	57.25	60	7
HKTPD101	49.5	50	-	-	70.25	80	9.5
APCH33031							
HKTPD051	24.7	25	-	-	45.45	50	4.75
HKTPD081	36.5	40	-	-	57.25	60	7
HKTPD101	49.5	50	-	-	70.25	80	9.5
APCH33631							
HKTPD051	24.7	25	-	-	47.9	50	4.75
HKTPD081	36.5	40	-	-	59.7	60	7
HKTPD101	49.5	50	-	-	72.7	80	9.5
HKTPD151	49.5	50	24.7	25	97.4	100	14.25
APCH34231							
HKTPD051	24.7	25	-	-	47.9	50	4.75
HKTPD081	36.5	40	-	-	59.7	60	7
HKTPD101	49.5	50	-	-	72.7	80	9.5
HKTPD151	49.5	50	24.7	25	97.4	100	14.25
HKTPD201	49.5	50	49.5	50	122.2	125	19
APCH34831							
HKTPD051	24.7	25	-	-	55.74	70	4.75
HKTPD081	36.5	40	-	-	67.54	70	7
HKTPD101	49.5	50	-	-	80.54	90	9.5
HKTPD151	49.5	50	24.7	25	105.24	110	14.25
HKTPD201	49.5	50	49.5	50	130.04	150	19
APCH36031							
HKTPD051	24.7	25	-	-	61.34	80	4.75
HKTPD081	36.5	40	-	-	73.14	80	7
HKTPD101	49.5	50	-	-	86.14	100	9.5
HKTPD151	49.5	50	24.7	25	110.84	125	14.25
HKTPD201	49.5	50	49.5	50	135.64	150	19

[1] Minimum Circuit Ampacity

[2] Maximum Overcurrent Protection Device

Heating kW Correction Factor					
Supply Votage	**240**	**230**	**220**	**210**	**208**
Correction Factor	**1.0**	**0.93**	**0.85**	**0.78**	**0.76**

Multiply rated kW by correction factor to get actual kW

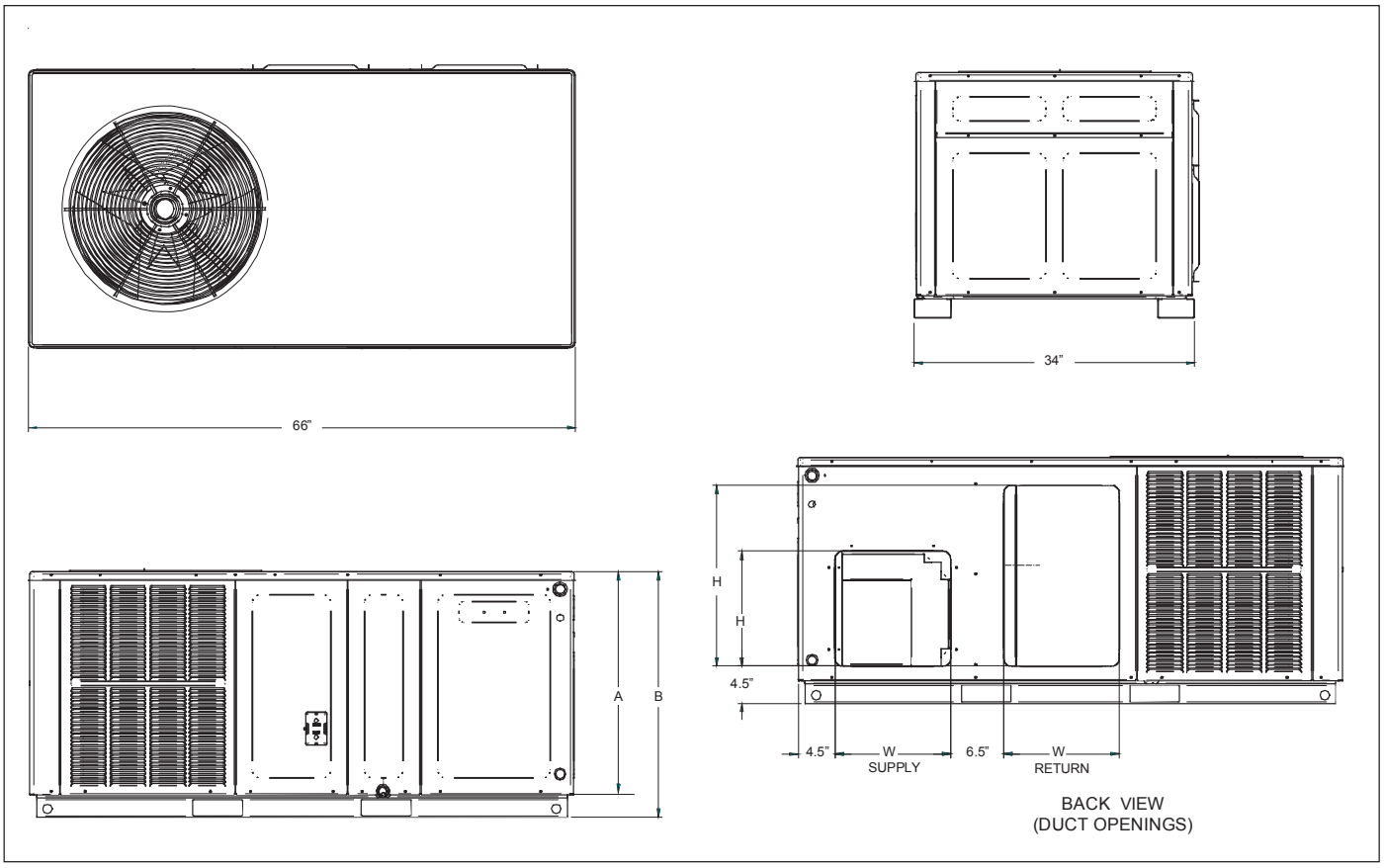

MINIMAL CLEARANCES

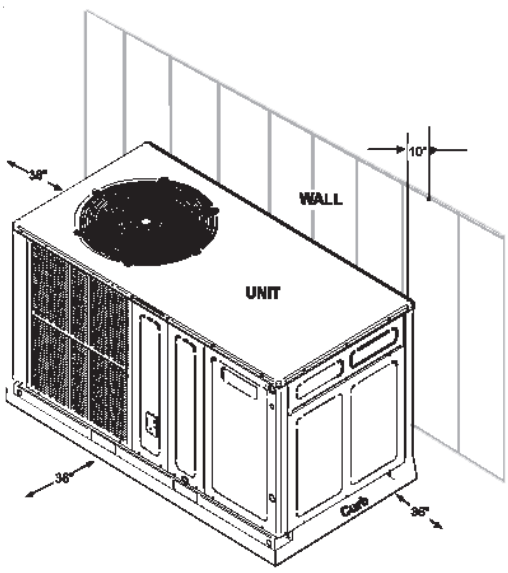

MODEL	DIMENSIONS				CHASSIS SIZE
	W"	D"	A"	B"	
APCH32431	66	34	27½	30	Small
APCH33031	66	34	27½	30	Small
APCH33631	66	34	32½	35	Medium
APCH34231	66	34	32½	35	Medium
APCH34831	66	34	32½	35	Medium
APCH36031	66	34	36	38½	Large

MODEL	DUCT OPENINGS			
	SUPPLY		RETURN	
	W	H	W	H
APCH32431	14	14	14	22
APCH33031	14	14	14	22
APCH33631	14	14	14	24
APCH34231	14	14	14	24
APCH34831	14	14	14	24
APCH36031	14	14	14	24

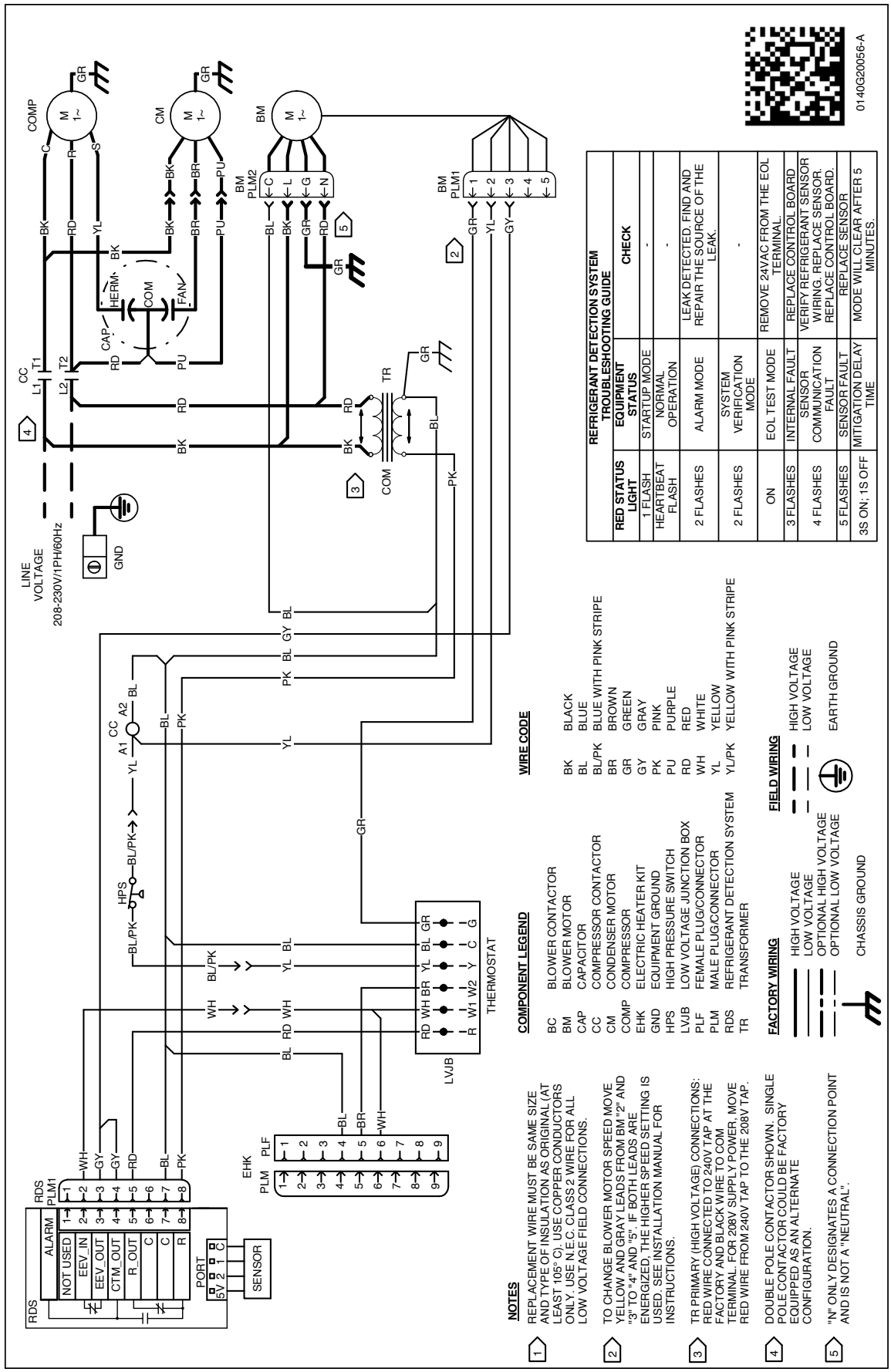

REFRIGERANT DETECTION SYSTEM TROUBLESHOOTING GUIDE		
RED STATUS LIGHT	EQUIPMENT STATUS	CHECK
1 FLASH	STARTUP MODE	-
HEARTBEAT FLASH	NORMAL OPERATION	-
2 FLASHES	ALARM MODE	LEAK DETECTED. FIND AND REPAIR THE SOURCE OF THE LEAK.
2 FLASHES	SYSTEM VERIFICATION MODE	-
ON	EOL TEST MODE	REMOVE 24VAC FROM THE EOL TERMINAL.
3 FLASHES	INTERNAL FAULT	REPLACE CONTROL BOARD
4 FLASHES	SENSOR COMMUNICATION FAULT	VERIFY REFRIGERANT SENSOR WIRING. REPLACE SENSOR. REPLACE CONTROL BOARD.
5 FLASHES	SENSOR FAULT	REPLACE SENSOR
3S ON; 1S OFF	MITIGATION DELAY TIME	MODE WILL CLEAR AFTER 5 MINUTES.

WARNING

High Voltage: Disconnect all power before servicing or installing this unit. Multiple power sources may be present. Failure to do so may cause property damage, personal injury, or death.

Wiring is subject to change. Always refer to the wiring diagram or the unit for the most up-to-date wiring.

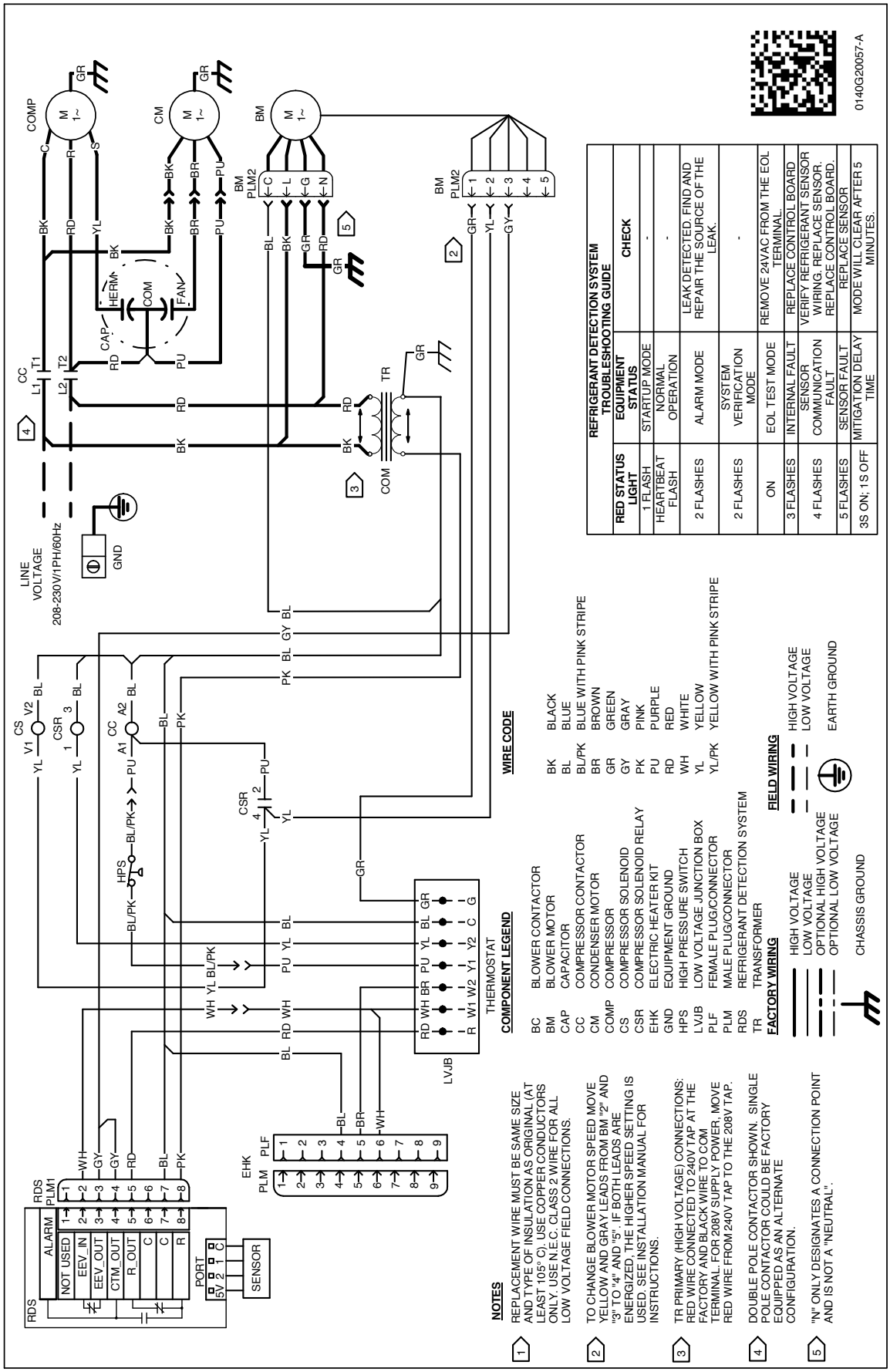

REFRIGERANT DETECTION SYSTEM TROUBLESHOOTING GUIDE		
RED STATUS LIGHT	EQUIPMENT STATUS	CHECK
1 FLASH	STARTUP MODE	-
HEARTBEAT FLASH	NORMAL OPERATION	-
2 FLASHES	ALARM MODE	LEAK DETECTED. FIND AND REPAIR THE SOURCE OF THE LEAK.
2 FLASHES	SYSTEM VERIFICATION MODE	-
ON	EOL TEST MODE	REMOVE 24VAC FROM THE EOL TERMINAL.
3 FLASHES	INTERNAL FAULT	REPLACE CONTROL BOARD
4 FLASHES	SENSOR COMMUNICATION FAULT	VERIFY REFRIGERANT SENSOR WIRING. REPLACE SENSOR. REPLACE CONTROL BOARD.
5 FLASHES	SENSOR FAULT	REPLACE SENSOR
3S ON; 1S OFF	MITIGATION DELAY TIME	MODE WILL CLEAR AFTER 5 MINUTES.

WARNING

High Voltage: Disconnect all power before servicing or installing this unit. Multiple power sources may be present. Failure to do so may cause property damage, personal injury, or death.

Wiring is subject to change. Always refer to the wiring diagram or the unit for the most up-to-date wiring.

ACCESSORY DESCRIPTION	ITEM NUMBER	
	SMALL CHASSIS	MEDIUM/LARGE CHASSIS
Downflow Economizer (use w/PCCP roof curb)	DDNECNJPCHHA	DDNECNJPCHHA
Downflow Plenum Kit (use w/PCCP roof curb)	PCP101-103	PCP101-103
Downflow Plenum Kit (R-8) (use w/PCCP roof curb)	PCP101-103 R8	PCP101-103 R8
Elbow Flashing w/R-8 Liner	PCEF101-103	PCEF101-103
Economizer Wiring Harness	0259G00213	0259G00213
External Horizontal Filter Rack	DPHFRA	DPHFRA
Horizontal Economizer	DHZECNJPGCHM	DHZECNJPGCHM
Inline Fuse Kit	INFKPKG01	INFKPKG01
Isolation Relay Kit (req'd with Economizer)	IRKT-01	IRKT-01
Manual Damper	PCMD101-103	PCMD101-103
Manual Damper - Horizontal	GPHMD101-103	GPHMD101-103
Motorized Damper	PCMDM101-103	PCMDM101-103
Outdoor Thermostat Kit w/ Lockout Stat	OT18-60A	OT18-60A
Roof Curb	PCCP101-103	PCCP101-103
Square to Round Downflow (use w/PCCP roof curb)	SQRPC101	SQRPC102-103
Square to Round Horizontal	SQRPCH101	SQRPCH102-103

Amana® is a registered trademark of Maytag Corporation or its related companies and is used under license. All rights reserved.
Our continuing commitment to quality products may mean a change in specifications without notice.
©2025 DAIKIN COMFORT TECHNOLOGIES MANUFACTURING, INC. • Houston, Texas • Printed in the USA.