AWUF/AWUT Series

Wall-Mount Air Handler
1 to 3 Tons

Contents

Nomenclature 2
Accessories 2
Product Specifications 3
Dimensions 7
Airflow Data 9
Wiring Diagram 11

Product Features

- AWUF Models: Equipped with a Check Flowrator
- AWUT Models: Equipped with a fully adjustable TXV
- Direct-drive, multi-speed motors allows air volume variation for heating/cooling
  - Multi-speed ECM: AWUF19, 25, 31, 32, 37 AWUT31, 32, 37
  - Multi-speed PSC motor: AWUF18, 24, 30, 36 AWUT24
- Sequence-controlled, rust-resistant nickel chromium heating elements of 3, 5, 8, and 10 kW
- Aluminum tubing coils on all models
- Cabinet air leakage less than 2.0% at 1.0 inch H_2O when tested in accordance with ASHRAE standard 193
- Cabinet air leakage less than 1.4% at 0.5 inch H_2O when tested in accordance with ASHRAE standard 193
- Factory-installed pull-type disconnect
- Thermoplastic drain pan with bottom primary and secondary drain connections
- Built-in filter rack (filter included)
- Large chassis (2½- and 3-ton units) – front return only
- Small chassis (1½- and 2-ton units) – front or bottom return
- Wall-hanging bracket provided
- AHRI Certified; ETL Listed

COMPANY WITH QUALITY SYSTEM CERTIFIED BY DNV GL = ISO 9001 =

COMPANY WITH ENVIRONMENTAL SYSTEM CERTIFIED BY DNV GL = ISO 14001 =

* Complete warranty details available from your local dealer or at www.amana-hac.com. To receive the 10-Year Parts Limited Warranty, online registration must be completed within 60 days of installation. Online registration is not required in California or Québec.

Amana® is a trademark of Maytag Corporation or its related companies and used under license to Goodman Company, L.P., Houston, Texas.

Supersedes 1/19

A	W	U	F	18	05	1	6	**
1	2	3	4	5,6	7,8	8	10	11,12

Brand

A Single-piece Air Handler

Unit Application

C Ceiling Mount PSC Motor

W Wall Mount PSC Motor

Cabinet Finish

U Unpainted N Uncased

Expansion Device

F Flowrater

T Expansion Valve

Engineering *

Major/ Minor Revisions

* Not used for inventory management

Refrigerant Charge

4 = R-410A

6 = R-410A or R-22*

*Factory installed TXV models (AWUT) are only compatible with Refrigerant Charge R410-A

Electrical

1 208/240 V, 1 Phase, 60 Hz

Heater Kits

03 = 3 kW 08 = 8 kW

05 = 5 kW 10 = 10 kW

Nominal Capacity Range @ 13 SEER

AWUF, AWUT with PSC Motors :

18 = 1½ Tons 30 = 2½ Tons

24 = 2 Tons 36 = 3 Tons

AWUF, AWUT with ECM Motors :

19 = 1 or 1½ Tons 31, 32 = 2½ Tons

25 = 2 Tons 37 = 3 Tons

Accessories

Model	Item #	Description
AWUF18- AWUF19	Wad-1	Wall access door
AWUF24- AWUF25, AWUT24	Wad-1	Wall access door
AWUF30- AWUF37	Wad-2	Wall access door
AWUT31, AWUT32, AWUT37	Wad-2	Wall access door

	AWUF 180316B	AWUF 180516B	AWUF 180816B	AWUF 190316B	AWUF 190516B	AWUF 190816B	AWUF 240316B	AWUF 240516B	AWUF 240816B	AWUF 241016B
Nominal Ratings										
Cooling (BTU/h)	18,000	18,000	18,000	12,000 or 18,000	12,000 or 18,000	12,000 (not recommended) or 18,000	24,000	24,000	24,000	24,000
Electric Heat (kW)	3	5	8	3	5	8	3	5	8	10
Blower										
Diameter	9	9	9	10	10	10	10	10	10	10
Width	6	6	6	6	6	6	6	6	6	6
Coil Connections										
Liquid	⅜"	⅜"	⅜"	⅜"	⅜"	⅜"	⅜"	⅜"	⅜"	⅜"
Suction	⅝"	⅝"	⅝"	⅝"	⅝"	⅝"	⅝"	⅝"	⅝"	⅝"
Coil Drain Connection (FPT)	¾"	¾"	¾"	¾"	¾"	¾"	¾"	¾"	¾"	¾"
Electrical Data										
Voltage	208/230	208/230	208/230	208/230	208/230	208/230	208/230	208/230	208/230	208/230
Minimum Circuit Ampacity (230V)	17.3	26.6	39.6	18.9	28.3	41.3	17.3	26.6	39.6	52.7
Minimum Circuit Ampacity (208V)	15.1	23.3	34.6	16.8	24.9	36.2	15.1	23.3	34.6	45.9
Max. Overcurrent Device (240V)	20	30	40	20	30	45	20	30	40	60
Max. Overcurrent Device (208V)	20	25	35	20	25	40	20	25	35	50
Minimum VAC	197	197	197	197	197	197	197	197	197	197
Maximum VAC	253	253	253	253	253	253	253	253	253	253
Blower Motor										
Full Load Amps (FLA)	1.3	1.3	1.3	2.6	2.6	2.6	1.3	1.3	1.3	1.3
Horsepower (HP)	1/5	1/5	1/5	1/3	1/3	1/3	1/5	1/5	1/5	1/5
Ship Weight (lbs)	84	84	84	84	84	84	84	84	84	84

	AWUF 250316B	AWUF 250516B	AWUF 250816B	AWUF 251016B	AWUF 300316B	AWUF 300516B	AWUF 300816B	AWUF 301016B	AWUF 310516A*	AWUF 310816A*
Nominal Ratings										
Cooling (BTU/h)	24,000	24,000	24,000	24,000	30,000	30,000	30,000	30,000	30,000	30,000
Electric Heat (kW)	3	5	8	10	3	5	8	10	5	8
Blower										
Diameter	10	10	10	10	9	9	9	9	10	10
Width	6	6	6	6	8	8	8	8	8	8
Coil Connections										
Liquid	⅜"	⅜"	⅜"	⅜"	⅜"	⅜"	⅜"	⅜"	⅜"	⅜"
Suction	⅝"	⅝"	⅝"	⅝"	¾"	¾"	¾"	¾"	¾"	¾"
Coil Drain Connection (FPT)	¾"	¾"	¾"	¾"	¾"	¾"	¾"	¾"	¾"	¾"
Electrical Data										
Voltage	208/230	208/230	208/230	208/230	208/230	208/230	208/230	208/230	208/230	208/230
Minimum Circuit Ampacity (230V)	18.9	28.3	41.3	54.3	17.6	27.0	40.0	53.0	29.9	42.9
Minimum Circuit Ampacity (208V)	16.8	24.9	36.2	47.5	15.5	23.6	34.9	46.2	26.5	37.8
Max. Overcurrent Device (240V)	20	30	45	60	20	30	40	60	30	45
Max. Overcurrent Device (208V)	20	25	40	50	20	25	35	50	30	40
Minimum VAC	197	197	197	197	197	197	197	197	197	197
Maximum VAC	253	253	253	253	253	253	253	253	253	253
Blower Motor										
Full Load Amps (FLA)	2.6	2.6	2.6	2.6	1.58	1.58	1.58	1.58	3.9	3.9
Horsepower (HP)	1/3	1/3	1/3	1/3	1/3	1/3	1/3	1/3	1/2	1/2
Ship Weight (lbs)	84	84	84	84	93	109	109	109	109	109

	AWUF 321016A*	AWUF 360516B	AWUF 360816B	AWUF 361016B	AWUF 370516B	AWUF 370816B	AWUF 371016B
Nominal Ratings							
Cooling (BTU/h)	30,000	36,000	36,000	36,000	36,000	36,000	36,000
Electric Heat (kW)	10	5	8	10	5	8	10
Blower							
Diameter	10	9	9	9	10	10	10
Width	8	8	8	8	8	8	8
Coil Connections							
Liquid	⅜"	⅜"	⅜"	⅜"	⅜"	⅜"	⅜"
Suction	¾"	¾"	¾"	¾"	¾"	¾"	¾"
Coil Drain Connection (FPT)	¾"	¾"	¾"	¾"	¾"	¾"	¾"
Electrical Data							
Voltage	208/230	208/230	208/230	208/230	208/230	208/230	208/230
Minimum Circuit Ampacity (230V)	55.9	27.0	40.0	53.0	29.9	42.9	56.9
Minimum Circuit Ampacity (208V)	49.1	23.6	34.9	46.2	26.5	37.8	49.1
Max. Overcurrent Device (240V)	60	30	40	60	30	45	60
Max. Overcurrent Device (208V)	50	25	35	50	30	40	50
Minimum VAC	197	197	197	197	197	197	197
Maximum VAC	253	253	253	253	253	253	253
Blower Motor							
Full Load Amps (FLA)	3.9	1.58	1.58	1.58	3.9	3.9	3.9
Horsepower (HP)	1/2	1/3	1/3	1/3	1/2	1/2	1/2
Ship Weight (lbs)	109	96	96	96	96	96	96

	AWUT 240514A*	AWUT 240814A*	AWUT 241014A*	AWUT 310516A*	AWUT 310816A*	AWUT 321016A*	AWUT 370516B	AWUT 370816B	AWUT 371016B
Nominal Ratings									
Cooling (BTU/h)	24,000	24,000	24,000	30,000	30,000	30,000	36,000	36,000	36,000
Electric Heat (kW)	5	8	10	5	8	10	5	8	10
Blower									
Diameter	10	10	10	10	10	10	10	10	10
Width	6	6	6	8	8	8	8	8	8
Coil Connections									
Liquid	⅜"	⅜"	⅜"	⅜"	⅜"	⅜"	⅜"	⅜"	⅜"
Suction	⅝"	⅝"	⅝"	¾"	¾"	¾"	¾"	¾"	¾"
Coil Drain Connection (FPT)	¾"	¾"	¾"	¾"	¾"	¾"	¾"	¾"	¾"
Electrical Data									
Voltage	208/230	208/230	208/230	208/230	208/230	208/230	208/230	208/230	208/230
Minimum Circuit Ampacity (230V)	26.6	39.6	52.7	29.9	42.9	55.9	29.9	42.9	55.9
Minimum Circuit Ampacity (208V)	23.3	34.6	45.9	26.5	37.8	49.1	26.5	37.9	49.1
Max. Overcurrent Device (240V)	30	40	60	30	45	60	30	45	60
Max. Overcurrent Device (208V)	25	35	50	30	40	50	30	40	50
Minimum VAC	197	197	197	197	197	197	197	197	197
Maximum VAC	253	253	253	253	253	253	253	253	253
Blower Motor									
Full Load Amps (FLA)	1.3	1.3	1.3	3.9	3.9	3.9	3.9	3.9	3.9
Horsepower (HP)	1/5	1/5	1/5	1/2	1/2	1/2	1/2	1/2	1/2
Ship Weight (lbs)	84	84	84	109	109	109	96	96	96

Note- Once installed, top of unit must be level or slightly tilted back to ensure proper condensate drainage.

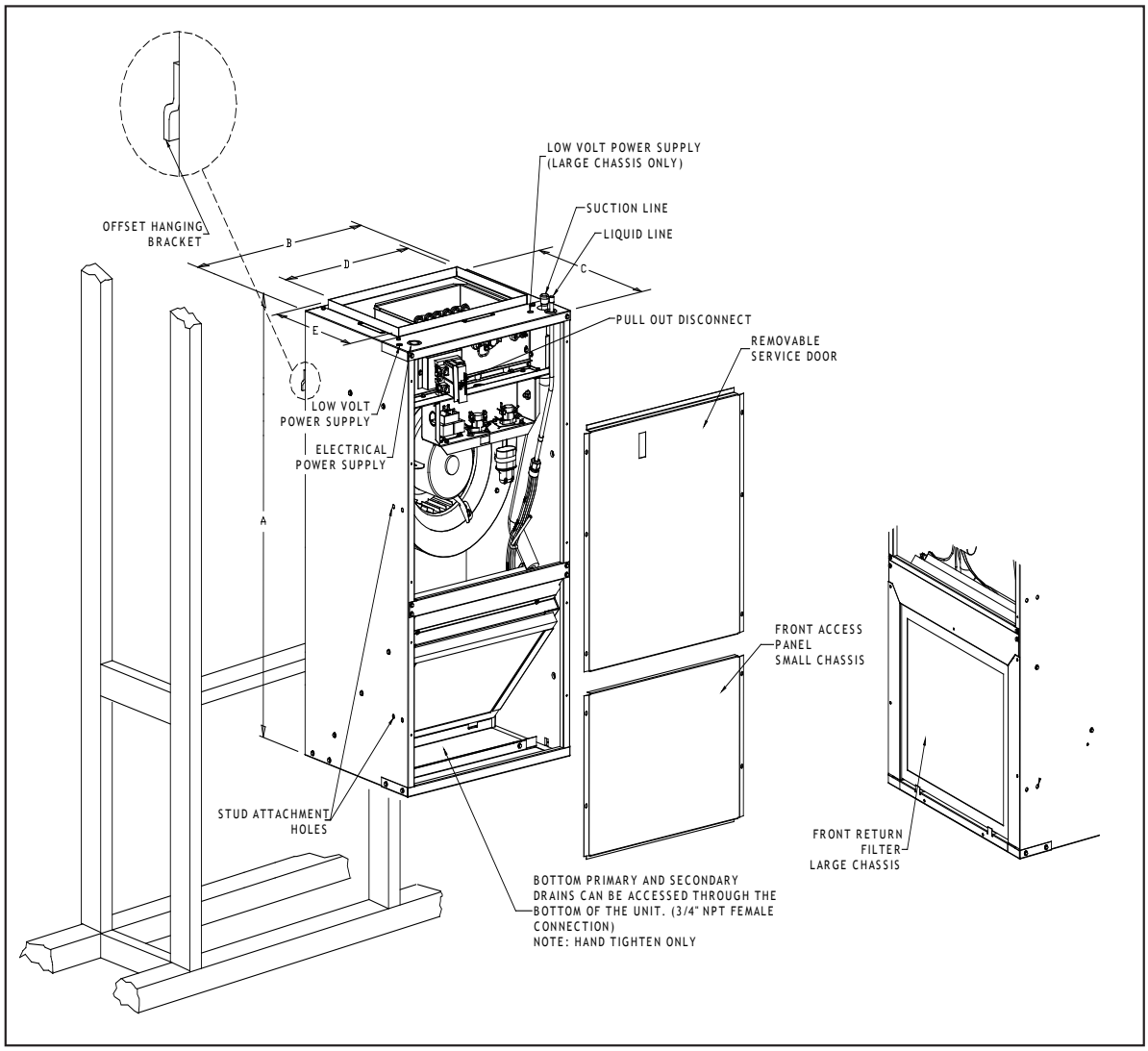

Small Chassis (AWUF18-25, AWUT24)	
A	36"
B	20 3/16"
C	16⅛"
D	16"
E	11"
Filter	14" x 18" x 1"

Large Chassis (AWUF30-37 / AWUT31, 32, 37)	
A	36"
B	24"
C	21"
D	19⅞"
E	15⅞"
Filter (30, 36, 31, 32, 37)	18" x 20" x 1"

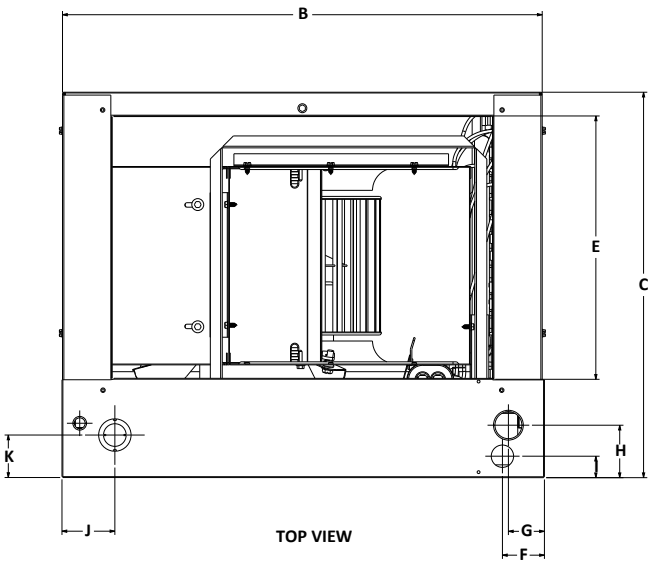

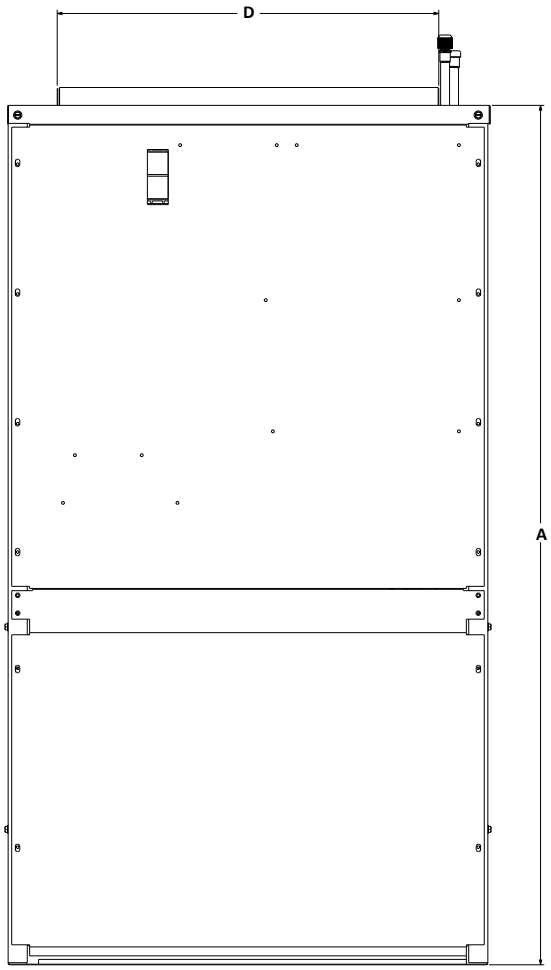

Fresh Air Openings

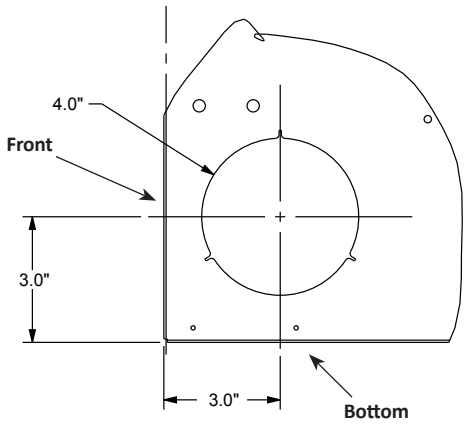

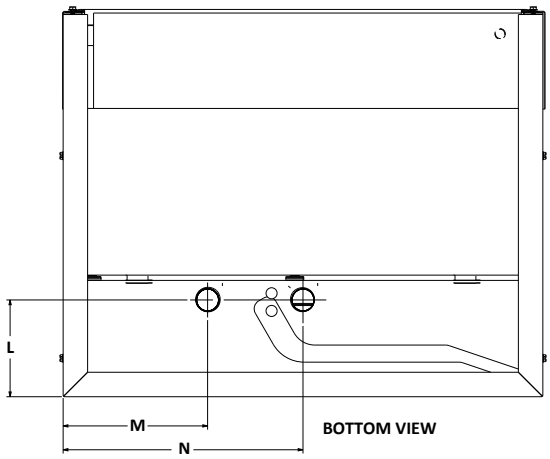

	A	B	C	D	E	F	G	H	I	J	K	L	M	N
AWUF 18-25 AWUT24	36"	20¼"	16⅛"	16"	11"	1¾"	1½"	2¼"	⅞"	1⅛"	1¾"	4"	6"	10"
AWUF 30-37 AWUT 31, 32, 37	36"	24"	21"	19⅞"	16"	4⅛"	1½"	1¾"	2"	1¼"	2⅜"	4"	8"	12"

Model	Motor Speed	CFM Delivered Against External Static Pressure				
		0.1"	0.2"	0.3"	0.4"	0.5"
AWUF18XX16B*	High	755	715	670	615	545
	Low	740	700	655	595	535
AWUF19XX16B*	T5	899	870	853	824	800
	T4	635	604	580	546	520
	T3	502	490	467	430	399
	T2	635	604	580	546	520
	T1	635	604	580	546	520
AWUF24XX16B*	High	900	870	835	795	760
	Low	865	835	800	765	725
AWUF25XX16A*	T5	899	870	853	824	800
	T4	635	604	580	546	520
	T3	799	775	747	727	702
	T2	635	604	580	546	520
	T1	635	604	580	546	520
AWUF30XX16B*	High	1255	1120	1100	1020	950
	Low	1115	1010	990	900	820
AWUF310516XX	T5	875	865	830	805	765
	T4	1005	975	945	920	890
	T3	840	795	785	745	700
	T2	645	615	550	500	445
	T1	645	615	550	500	445
AWUF310816XX AWUF321016XX	T5	1090	1065	1040	1015	985
	T4	1005	975	945	920	890
	T3	840	795	785	745	700
	T2	645	615	550	500	445
	T1	645	615	550	500	445
AWUF36XX16B*	High	1215	1145	1070	985	890
	Low	1120	1065	1000	915	820
AWUF37XX16B*	T5	1315	1290	1260	1230	1200
	T4	1240	1205	1175	1145	1115
	T3	1175	1140	1105	1075	1045
	T2	1060	1020	990	955	925
	T1	1060	1025	995	960	925
AWUT24XX14A*	High	709	701	705	658	603
	Low	687	688	683	636	576
AWUT310516XX	T5	875	865	830	805	765
	T4	1005	975	945	920	890
	T3	840	795	785	745	700
	T2	645	615	550	500	445
	T1	645	615	550	500	445

Model	Motor Speed	CFM Delivered Against External Static Pressure				
		0.1"	0.2"	0.3"	0.4"	0.5"
AWUT310816XX AWUT321016XX	T5	1090	1065	1040	1015	985
	T4	1005	975	945	920	890
	T3	840	795	785	745	700
	T2	645	615	550	500	445
	T1	645	615	550	500	445
AWUT37XX16B*	T5	1315	1290	1260	1230	1200
	T4	1240	1205	1175	1145	1115
	T3	1175	1140	1105	1075	1045
	T2	1060	1020	990	955	925
	T1	1060	1025	995	960	925

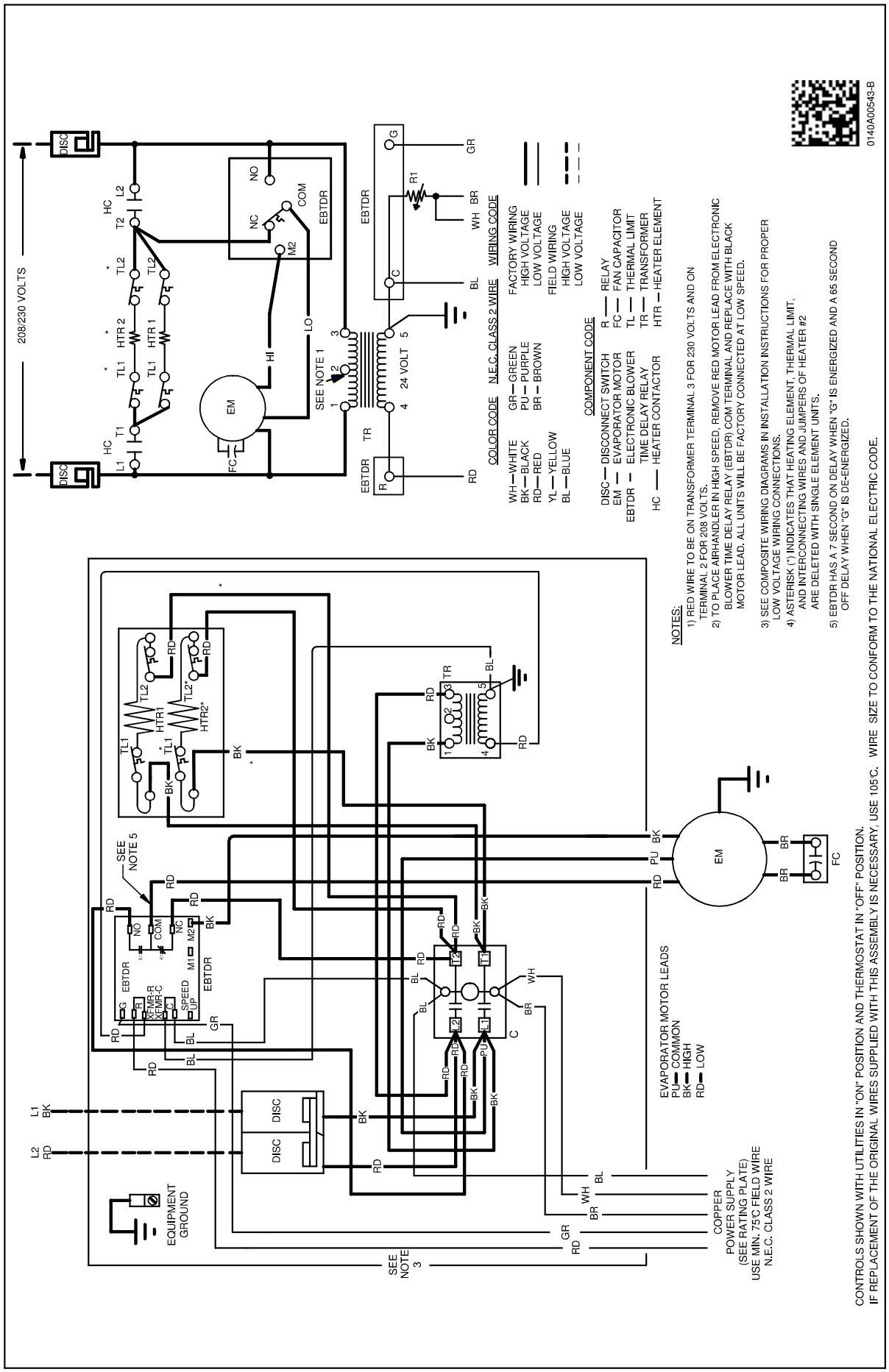

Warning

High Voltage: Disconnect all power before servicing or installing this unit. Multiple power sources may be present. Failure to do so may cause property damage, personal injury, or death.

Wiring is subject to change. Always refer to the wiring diagram on the unit for the most up-to-date wiring.

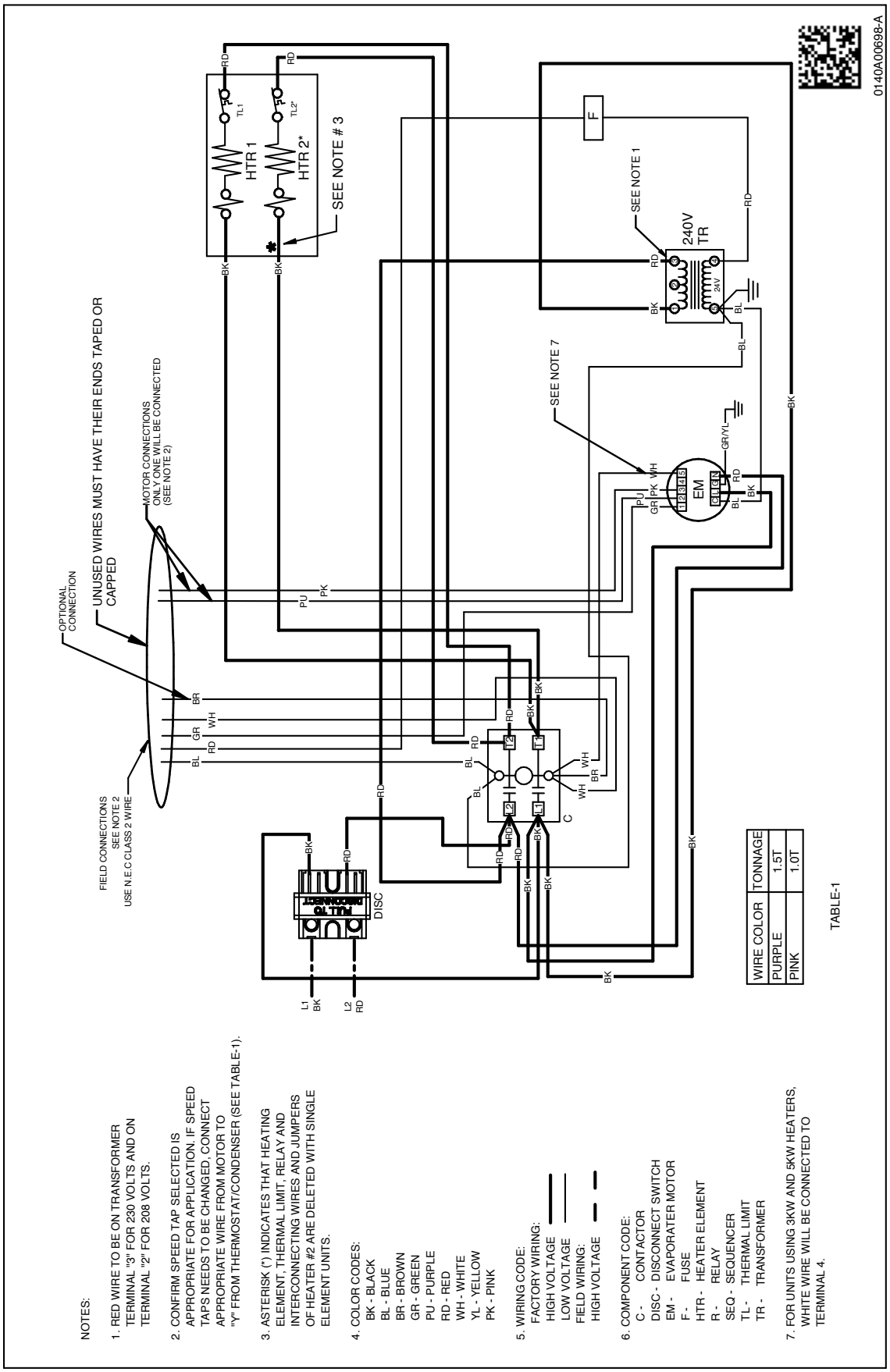

NOTES:

1. RED WIRE TO BE ON TRANSFORMER TERMINAL "3" FOR 230 VOLTS AND ON TERMINAL "2" FOR 208 VOLTS.
2. CONFIRM SPEED TAP SELECTED IS APPROPRIATE FOR APPLICATION. IF SPEED TAPS NEEDS TO BE CHANGED, CONNECT APPROPRIATE WIRE FROM MOTOR TO "Y" FROM THERMOSTAT/CONDENSER (SEE TABLE-1).
3. ASTERISK (*) INDICATES THAT HEATING ELEMENT, THERMAL LIMIT, RELAY AND INTERCONNECTING WIRES AND JUMPERS OF HEATER #2 ARE DELETED WITH SINGLE ELEMENT UNITS.
4. COLOR CODES:
   - BK - BLACK
   - BL - BLUE
   - BR - BROWN
   - GR - GREEN
   - PU - PURPLE
   - RD - RED
   - WH - WHITE
   - YL - YELLOW
   - PK - PINK
5. WIRING CODE:
   - FACTORY WIRING:
   - HIGH VOLTAGE ———
   - LOW VOLTAGE ———
   - FIELD WIRING:
   - HIGH VOLTAGE — —
6. COMPONENT CODE:
   - C - CONTACTOR
   - DISC - DISCONNECT SWITCH
   - EM - EVAPORATER MOTOR
   - F - FUSE
   - HTR - HEATER ELEMENT
   - R - RELAY
   - SEQ - SEQUENCER
   - TL - THERMAL LIMIT
   - TR - TRANSFORMER
7. FOR UNITS USING 3KW AND 5KW HEATERS, WHITE WIRE WILL BE CONNECTED TO TERMINAL 4.

WARNING

High Voltage: Disconnect all power before servicing or installing this unit. Multiple power sources may be present. Failure to do so may cause property damage, personal injury, or death.

Wiring is subject to change. Always refer to the wiring diagram on the unit for the most up-to-date wiring.

AWUF25 Wiring Diagram

NOTES:

1. RED WIRE TO BE ON TRANSFORMER TERMINAL "3" FOR 230 VOLTS AND ON TERMINAL "2" FOR 208 VOLTS.

2. CONFIRM SPEED TAP SELECTED IS APPROPRIATE FOR APPLICATION. IF SPEED TAPS NEEDS TO BE CHANGED, CONNECT APPROPRIATE WIRE FROM MOTOR TO "Y" FROM THERMOSTAT/CONDENSER (SEE TABLE-1).

3. ASTERISK (*) INDICATES THAT HEATING ELEMENT, THERMAL LIMIT, RELAY AND INTERCONNECTING WIRES AND JUMPERS OF HEATER #2 ARE DELETED WITH SINGLE ELEMENT UNITS.

4. COLOR CODES:
   - BK - BLACK
   - BL - BLUE
   - BR - BROWN
   - GR - GREEN
   - PU - PURPLE
   - RD - RED
   - WH - WHITE
   - YL - YELLOW
   - PK - PINK

5. WIRING CODE:
   - FACTORY WIRING:
     - HIGH VOLTAGE
     - LOW VOLTAGE
   - FIELD WIRING:
     - HIGH VOLTAGE

6. COMPONENT CODE:
   - C - CONTACTOR
   - DISC - DISCONNECT SWITCH
   - EM - EVAPORATER MOTOR
   - F - FUSE
   - HTR - HEATER ELEMENT
   - R - RELAY
   - SEQ - SEQUENCER
   - TL - THERMAL LIMIT
   - TR - TRANSFORMER

7. FOR UNITS USING 3KW AND 5KW HEATERS, WHITE WIRE WILL BE CONNECTED TO TERMINAL 4.

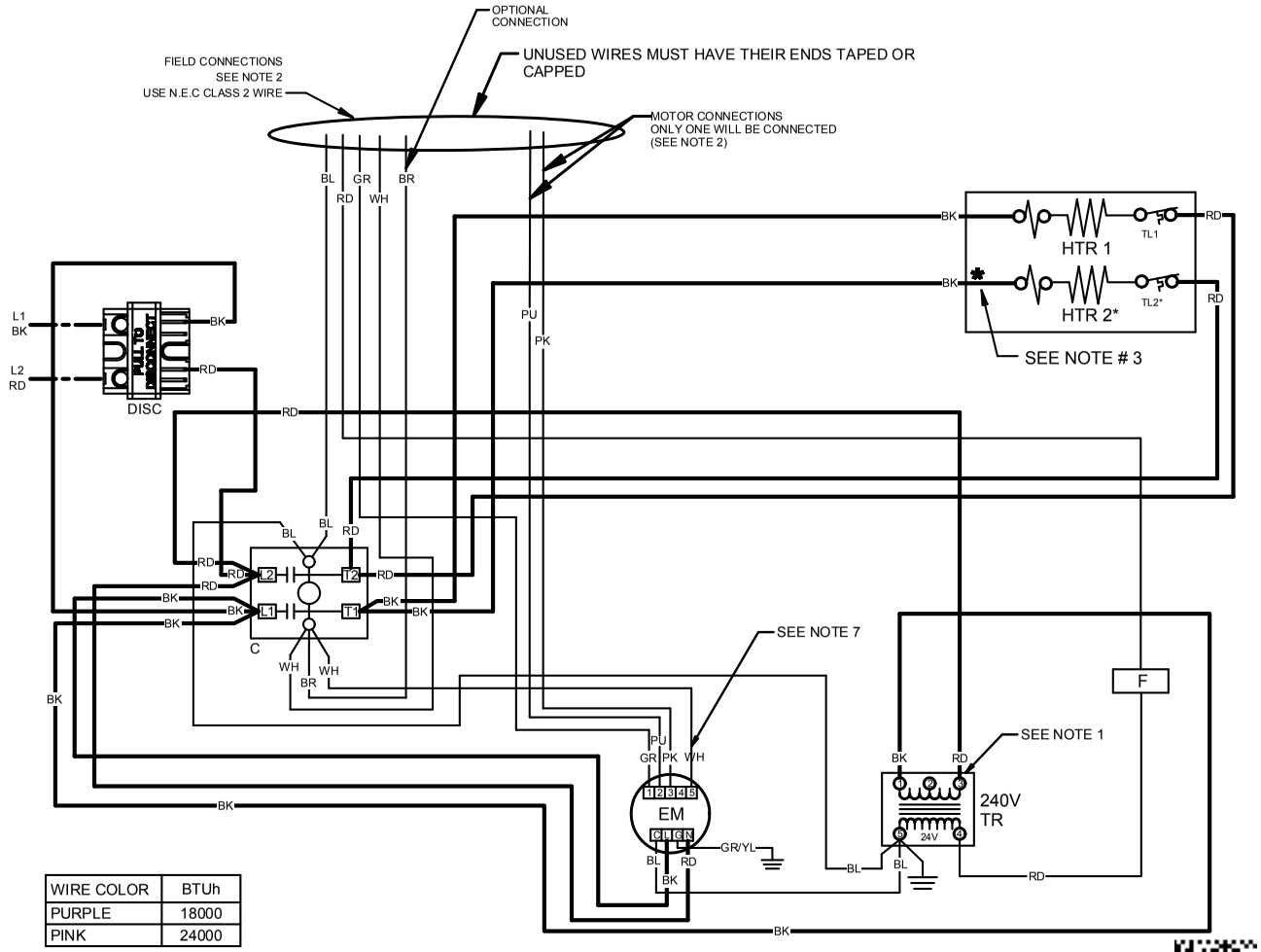

WIRE COLOR	BTUh
PURPLE	18000
PINK	24000

TABLE-1

0140A00544-A

Wiring is subject to change. Always refer to the wiring diagram on the unit for the most up-to-date wiring.

WARNING — ***High Voltage:*** Disconnect all power before servicing or installing this unit. Multiple power sources may be present. Failure to do so may cause property damage, personal injury, or death.

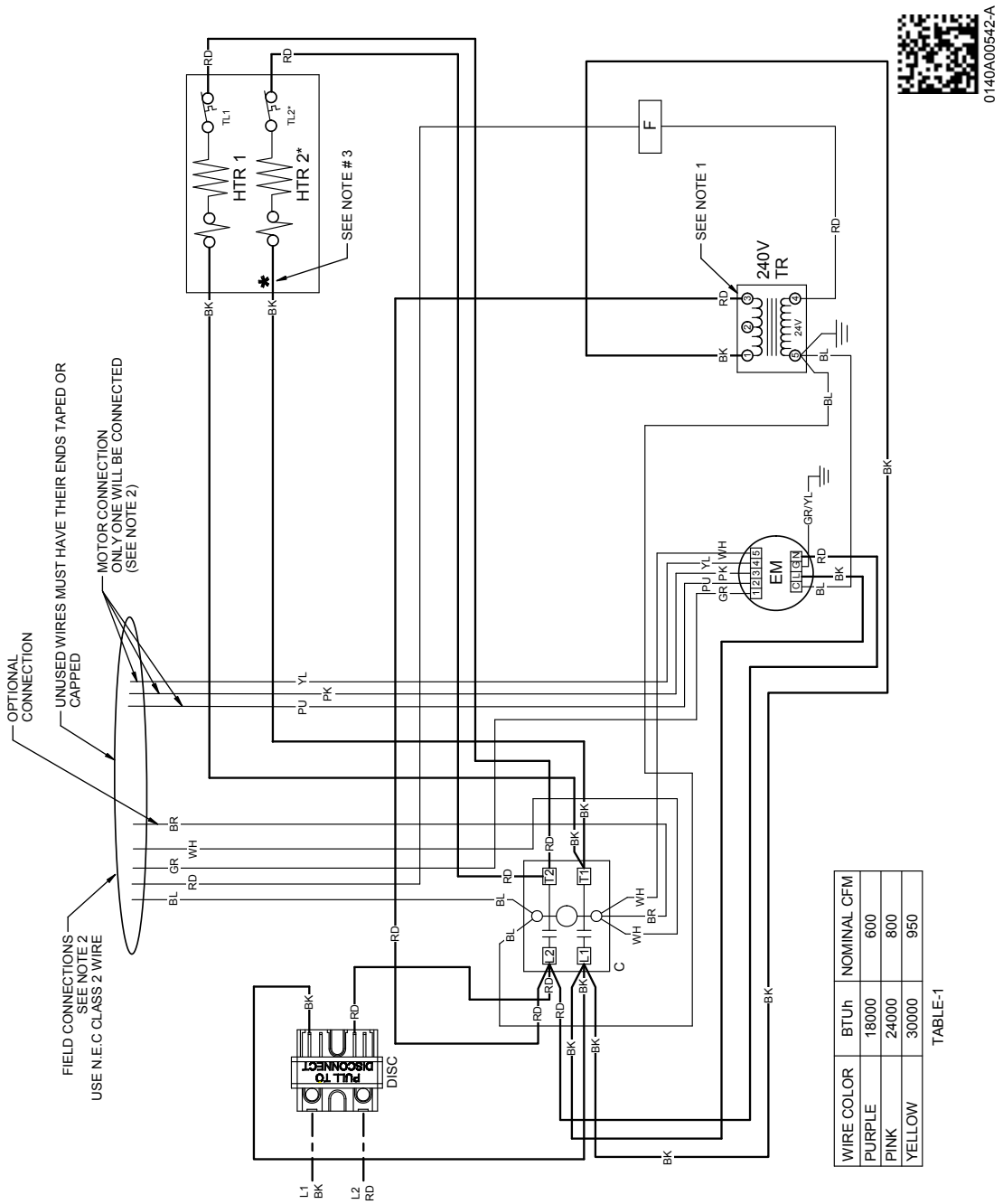

WIRE COLOR	BTUh	NOMINAL CFM
PURPLE	18000	600
PINK	24000	800
YELLOW	30000	950

TABLE-1

WARNING

High Voltage: Disconnect all power before servicing or installing this unit. Multiple power sources may be present. Failure to do so may cause property damage, personal injury, or death.

Wiring is subject to change. Always refer to the wiring diagram on the unit for the most up-to-date wiring.

NOTES:

1. RED WIRE TO BE ON TRANSFORMER TERMINAL "3" FOR 230 VOLTS AND ON TERMINAL "2" FOR 208 VOLTS.
2. CONFIRM SPEED TAP SELECTED IS APPROPRIATE FOR APPLICATION. IF SPEED TAPS NEEDS TO BE CHANGED, CONNECT APPROPRIATE WIRE FROM MOTOR TO "Y" FROM THERMOSTAT/CONDENSER (SEE TABLE-1).
3. ASTERISK (*) INDICATES THAT HEATING ELEMENT, THERMAL LIMIT, RELAY AND INTERCONNECTING WIRES AND JUMPERS OF HEATER #2 ARE DELETED WITH SINGLE ELEMENT UNITS.
4. COLOR CODES:
   - BK - BLACK
   - BL - BLUE
   - BR - BROWN
   - GR - GREEN
   - PU - PURPLE
   - RD - RED
   - WH - WHITE
   - YL - YELLOW
5. WIRING CODE:
   - FACTORY WIRING: HIGH VOLTAGE ———
   - LOW VOLTAGE ———
   - FIELD WIRING: HIGH VOLTAGE – – –
6. COMPONENT CODE:
   - C - CONTACTOR
   - DISC - DISCONNECT SWITCH
   - EM - EVAPORATER MOTOR
   - F - FUSE
   - HTR - HEATER ELEMENT
   - R - RELAY
   - SEQ - SEQUENCER
   - TL - THERMAL LIMIT
   - TR - TRANSFORMER

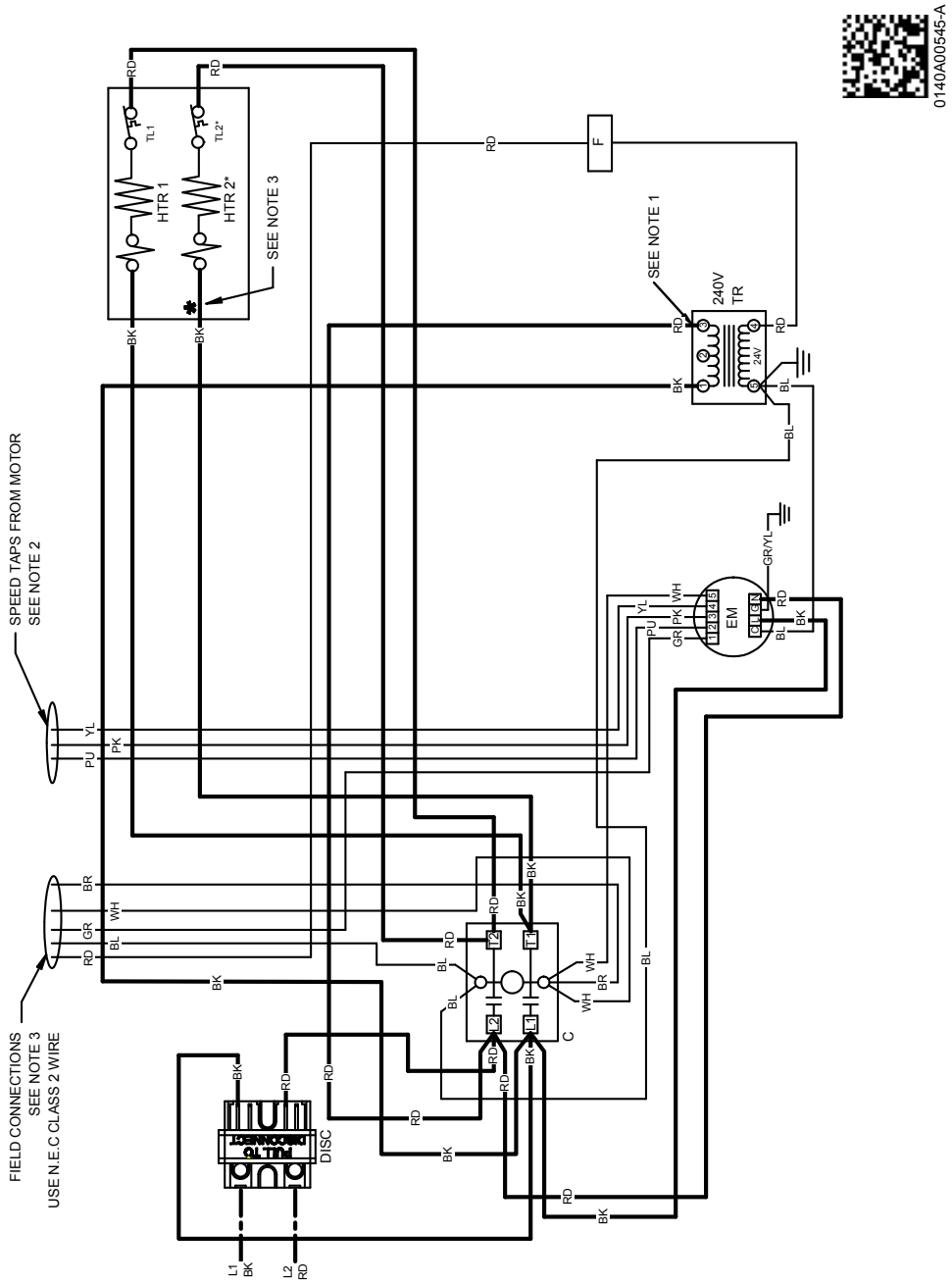

0140A00545-A

NOTES:

1. RED WIRE TO BE ON TRANSFORMER TERMINAL "3" FOR 230 VOLTS AND ON TERMINAL "2" FOR 208 VOLTS.
2. SEE COMPOSITE WIRING DIAGRAMS IN INSTALLATION INSTRUCTIONS FOR PROPER LOW VOLTAGE WIRING CONNECTIONS.
3. ASTERISK (*) INDICATES THAT HEATING ELEMENT, THERMAL LIMIT, RELAY AND INTERCONNECTING WIRES AND JUMPERS OF HEATER #2 ARE DELETED WITH SINGLE ELEMENT UNITS.
4. COLOR CODES:
   - BK - BLACK
   - BL - BLUE
   - BR - BROWN
   - GR - GREEN
   - PU - PURPLE
   - RD - RED
   - WH - WHITE
   - YL - YELLOW
5. WIRING CODE:
   - FACTORY WIRING
   - HIGH VOLTAGE
   - LOW VOLTAGE
   - FIELD WIRING
   - HIGH VOLTAGE
   - LOW VOLTAGE SEE NOTE 2
6. COMPONENT CODE:
   - C - CONTACTOR
   - DISC - DISCONNECT SWITCH
   - EM - EVAPORATER MOTOR
   - F - FUSE
   - HTR - HEATER ELEMENT
   - R - RELAY
   - SEQ - SEQUENCER
   - TL - THERMAL LIMIT
   - TR - TRANSFORMER

WARNING

High Voltage: Disconnect all power before servicing or installing this unit. Multiple power sources may be present. Failure to do so may cause property damage, personal injury, or death.

Wiring is subject to change. Always refer to the wiring diagram on the unit for the most up-to-date wiring.

Amana® is a trademark of Maytag Corporation or its related companies and used under license to Goodman Company, L.P. All rights reserved. Our continuing commitment to quality products may mean a change in specifications without notice. ©2019 Goodman Company, L.P. • Houston, Texas • Printed in the USA.